HILLSBOROUGH COUNTY
NORTHWEST AREA HEAD START
(C77814000)

HILLSBOROUGH COUNTY BOARD OF COUNTY COMMISSIONERS

KEN HAGAN
PAT KEMP
LESLEY "LES" MILLER, JR.
SANDRA L. MURMAN
KIMBERLY OVERMAN
MARIELLA SMITH
STACY R. WHITE

WILDERARCHITECTURE, INC.

1315 E. SEVENTH AVENUE
SUITE 106
TAMPA, FLORIDA 33605.3607

TELEPHONE 813.242.6677
TOLL FREE 877.286.9895
FACSIMILE 813.242.6683

wilderarchitecture.com

AA26000655

WILDERARCHITECTURE, INC.

PROJECT TEAM

CIVIL ENGINEERING
CAMPO ENGINEERING, INC.

STRUCTURAL ENGINEERING
MASTER CONSULTING ENGINEERS

MECHANICAL / ELECTRICAL ENGINEERING
ANSTON-GREENLEES, INC.

HILLSBOROUGH COUNTY BOARD
OF COUNTY COMMISSIONERS
COUNTY CENTER
601 E KENNEDY BLVD
TAMPA, FL 33601

HILLSBOROUGH COUNTY
NORTHWEST AREA HEAD START

PROJECT #: 2010-00

90%
CONSTRUCTION
DOCUMENTS

08.19.2020

@	AT
AB	ANCHOR BOLT
AC	AIR CONDITION, ER, ING
ADA	AMERICANS WITH DISABILITIES ACT
ADJ	ADJACENT
AFF	ABOVE FINISHED FLOOR
ALUM	ALUMINUM
APC	ACOUSTIC PANEL CEILING
APPROX	APPROXIMATELY
ARCH	ARCHITECT
BLDG(S)	BUILDING(S)
BLK	BLOCK
BLKG	BLOCKING
BOS	BOTTTOM OF STEEL
BOTT	BOTTOM
BRG	BEARING
BUR	BUILT-UP ROOFING
CI	CONTRACTOR INSTALLED
CJ	CONTROL JOINT
CL	CENTER LINE
CLF	CHAIN LINK FENCE
CLG	CEILING
CEM	CEMENT
CP	CONTRACTOR PROVIDED
CR	CLASSROOM
CT	CERAMIC TILE
CM	CONSTRUCTION MANAGER
CMU	CONCRETE MASONRY UNIT
COL	COLUMN
CONC	CONCRETE
CONF	CONFERENCE
CONST	CONSTRUCTION
CONT	CONTINUOUS
CONTR	CONTRACTOR
CPT	CARPET
D	DEEP, DEPTH
DEMO	DEMOLITION
DF	DRINKING FOUNTAIN
DIAM	DIAMETER
DIM	DIMENSION
DOCS	DOCUMENTS
DN	DOWN
DS	DOWNSPOUT
DTL	DETAIL
DWG	DRAWING
EA	EACH
EHPA	ENHANCED HURRICANE PROTECTION AREA
EJ	EXPANSION JOINT
ELEC	ELECTRICAL
ELEV	ELEVATION
EQ	EQUAL
EQUIP	EQUIPMENT
ETC	ETCETERA
ETR	EXISTING TO REMAIN
EWC	ELECTRIC WATER COOLER
EWH	ELECTRIC WATER HEATER
EXIST	EXISTING
EXP	EXPOSED
EXT	EXTERIOR
FBC	FLORIDA BUILDING CODE
FD	FLOOR DRAIN
FE	FIRE EXTINGUISHER
FFPC	FLORIDA FIRE PREVENTION CODE
FIN	FINISH
FIXT	FIXTURE
FL	FLOOR
FLUOR	FLUORESCENT
FT	FEET
FTG	FOOTING
FURN	FURNITURE
GA	GAUGE
GALV	GALVANIZED
GC	GENERAL CONTRACTOR
GL	GLASS, GLAZING
GWB	GYPSUM WALLBOARD
HB	HOSE BIBB
HC	HANDICAPPED
HT	HEIGHT, HIGH
HDW	HARDWARE
HM	HOLLOW METAL
HMF	HOLLOW METAL FRAME
HORIZ	HORIZONTAL
ID	INSIDE DIAMETER
INCAND	INCANDESCENT
INSUL	INSULATION
INT	INTERIOR
JAN	JANITOR
JT	JOINT
MAINT	MAINTENANCE
MAS	MASONRY
MAX	MAXIMUM
MECH	MECHANICAL
MFR	MANUFACTURER
MH	MANHOLE
MIN	MINIMUM
MISC	MISCELLANEOUS
MO	MASONRY OPENING
MTD	MOUNTED
MVCJ	MASONRY VERTICAL CONTROL JOINT
NA	NOT APPLICABLE
NIC	NOT IN CONTRACT
NO,#	NUMBER
NTS	NOT TO SCALE
OC	ON CENTER
OD	OUTSIDE DIAMETER
OH	OVERHEAD
OI	OWNER INSTALLED
OP	OWNER PROVIDED
OPNG	OPENING
OPP	OPPOSITE
OPH	OPPOSITE HAND
PERIM	PERIMETER
PLAS	PLASTER
PL	PROPERTY LINE
PNT	PAINT (PAINTED FINISH)
PROJ	PROJECT
PT	PRESSURE TREATED
PTN	PARTITION
PVC	POLYVINYL CHLORIDE
PLWD	PLYWOOD
PP	PUSH PLATE
QT	QUARRY TILE
R/W	RIGHT OF WAY
RCP	REFLECTED CEILING PLAN
RD	ROOF DRAIN
REBAR	REINFORCING BAR
REINF	REINFORCE/MENT/ING
REQ	REQUIRED
RM	ROOM
RO	ROUGH OPENING
RWB	RESILIENT WALL BASE
RWL	RAIN WATER LEADER
SC	SMOKE COMPARTMENT
SHT	SHEET
SF	SQUARE FOOT
SIM	SIMILAR
SOG	SLAB ON GRADE
SPECS	SPECIFICATIONS
SQ	SQUARE
SS	STAINLESS STEEL
STC	SOUND TRANSMISSION CLASS (RATING)
STD	STANDARD
STL	STEEL
STOR	STORAGE
STRL	STRUCTURAL
SUSP	SUSPEND / ED / SION
T&B	TOP AND BOTTOM
T&G	TONGUE AND GROOVE
TEL	TELEPHONE
TEMP	TEMPORARY
TERR	TERRAZZO
TOM	TOP OF MASONRY
TOS	TOP OF STEEL
TOT	TOTAL
T/S	TOP OF SLAB
TYP	TYPICAL (UNO)
UNO	UNLESS NOTED OTHERWISE
V	VINYL
VCT	VINYL COMPOSITION TILE
VERT	VERTICAL
VEST	VESTIBULE
VIF	VERIFY IN FIELD
VP	VENEER PLASTER
VSF	VINYL SHEET FLOORING
VT	VINYL TILE
VTR	VENT TO ROOF
W	WIDE, WIDTH
W/	WITH
WP	WEATHERPROOF
WWF	WELDED WIRE FABRIC
WWP	WOOD VENEER PANELING

ARCHITECTURAL ABBREVIATIONS AND ACRONYMS D12

DRAWING TAGS

FURNITURE & EQUIP

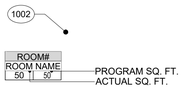

PARTITION TYPE



SPECIFIC NOTE



WINDOW TYPE



HOLLOW METAL FRAME TYPE



DOOR TAG



LOUVER TAG



SPOT ELEV



SIGNAGE TAGS

SIGNAGE LOCATION



ARCHITECTURAL DRAWING SYMBOLS D7

DRAWING IDENTIFICATION



NORTH ARROW



GRAPHIC SCALE

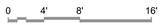

DETAIL INDICATION



SECTION CUT INDICATION

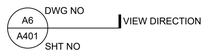

ELEVATION INDICATION

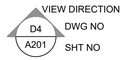

PROJECT DATA D4

PROJECT DESCRIPTION

NEW HEAD START CLASSROOM BUILDING, PARKING AND EXTERIOR PLAY AREA(S), AT AN EXIST CHURCH PARK SITE. ADDITIONAL SCOPE (N.I.C.) FOR CIVIL AND PARKS IMPROVEMENTS ARE SHOWN FOR COORDINATION PURPOSE.

DRAWING INDEX D1

COVER

ARCHITECTURAL
A0.0 GENERAL INFORMATION SHEET
A0.1 LIFE SAFETY PLAN
A1.1 OVERALL SITE PLAN
A1.2 SITE PLAN
A1.3 FLOOR PLAN
A1.4 DIMENSION PLAN
A1.5 REFLECTED CEILING PLAN
A1.6 ROOF PLAN
A2.1 ENLARGED PLANS
A2.2 ENLARGED PLANS
A3.1 EXTERIOR ELEVATIONS
A3.2 EXTERIOR ELEVATIONS
A4.1 BUILDING SECTIONS
A4.2 WALL SECTIONS
A4.3 PARTITION TYPES
A5.1 DETAILS
A5.2 DETAILS
A6.1 INTERIOR ELEVATIONS
A6.2 INTERIOR ELEVATIONS
A7.1 SCHEDULE

PRODUCT APPROVAL
PA.1 FPA - STOREFRONT
PA.2 FPA - DOUBLE DOOR
PA.3 FPA - SINGLE DOOR
PA.4 FPA - ROOFING
PA.5 FPA - LOUVER
PA.6 FPA - SOFFIT

SURVEY
SHEET 1 OF 1 BOUDARY AND TOPOGRAPIC SURVEY

CIVIL
C-1 COVER SHEET
C-2 GENERAL NOTES AND DETAILS
C-3 EXISTING CONDITIONS, DEMO & EROSION CONTROL PLAN
C-4 SITE PLAN
C-5 PAVING, GRADING & DRAINAGE PLAN
C-5.1 CROSS SECTIONS
C-6 PAVING, GRADING & DRAINAGE DETAILS
C-7 UTILITY PLAN
C-8 UTILITY DETAILS
C-9 UTILITY DETAILS

LANDSCAPE
L1.1 LANDSCAPE PLAN
L1.2 IRRIGATION PLAN
L1.3 LANDSCAPE AND IRRIGATION NOTES AND DETAILS

STRUCTURAL
S1.1 GENERAL STRUCTURAL NOTES
S1.2 WIND DESIGN DATA AND LOAD SCHEDULE
S2.1 FOUNDATION PLAN
S2.2 SLAB ON GRADE PLAN
S2.3 ROOF FRAMING PLAN
S3.1 TYPICAL DETAILS
S3.2 TYPICAL DETAILS
S4.1 SECTION AND DETAILS
S4.2 SECTION AND DETAILS
S5.1 ELEVATIONS
S5.2 ELEVATIONS

PLUMBING
P0.1 PLUMBING GENERAL NOTES, LEGEND AND SCHEDULES
P1.1 PLUMBING PLAN
P2.1 PLUMBING ISOMETRICS
P3.1 PLUMBING DETAILS
P3.2 PLUMBING DETAILS

MECHANICAL
M0.1 HVAC GENERAL NOTES AND LEGEND
M1.1 HVAC PLAN
M2.1 HVAC SCHEDULES
M2.2 HVAC SCHEDULES
M3.1 HVAC DETAILS
M4.1 HVAC CONTROLS

ELECTRICAL
E0.1 ELECTRICAL GENERAL NOTES AND SYMBOL LEGEND
E0.2 LUMINAIRE CUT SHEETS
E0.3 ELECTRICAL SITE PLAN
E1.1 LIGHTING PLAN
E2.1 POWER AND COMMUNICATIONS PLAN
E3.1 FIRE ALARM AND SYSTEMS PLANS
E4.1 PV SOLAR SYSTEM ELECTRICAL ROOF PLAN
E5.1 ELECTRICAL SCHEDULES
E6.1 ELECTRICAL RISER DIAGRAM
E7.1 ELECTRICAL DETAILS

REFLECTED CEILING PLAN

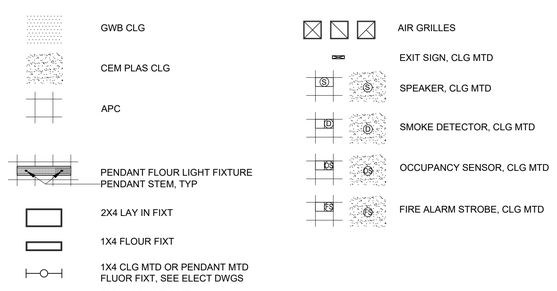

FLOOR PLAN

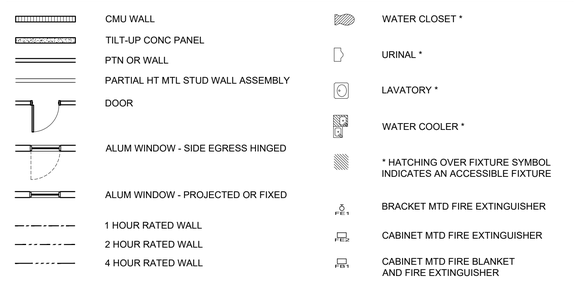

SITE PLAN

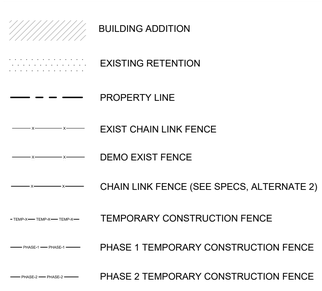

LEGENDS A4

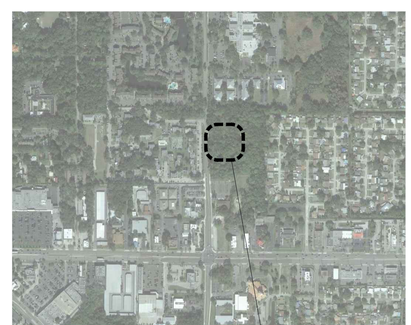

PROJECT ADDRESS:
5631 WEBB RD
TOWN 'N' COUNTRY, FL 33615

VICINITY MAP
NTS A1

1315 E. SEVENTH AVENUE
SUITE 106
TAMPA, FLORIDA 33605.3607

TELEPHONE 813.242.6677
TOLL FREE 877.286.9895
FACSIMILE 813.242.6683

wilderarchitecture.com

AA26000655

WILDERARCHITECTURE, INC.

HILLSBOROUGH COUNTY BOARD
OF COUNTY COMMISSIONERS
COUNTY CENTER
601 E KENNEDY BLVD
TAMPA, FL 33601

HILLSBOROUGH COUNTY
NORTHWEST AREA HEAD START

PROJECT #: 2010-00

Distribution	Date
SCHEMATIC DESIGN	05.01.2020
DESIGN DEVELOPMENT	06.11.2020
90% CONST DOCS	08.19.2020

GENERAL INFORMATION

A0.0

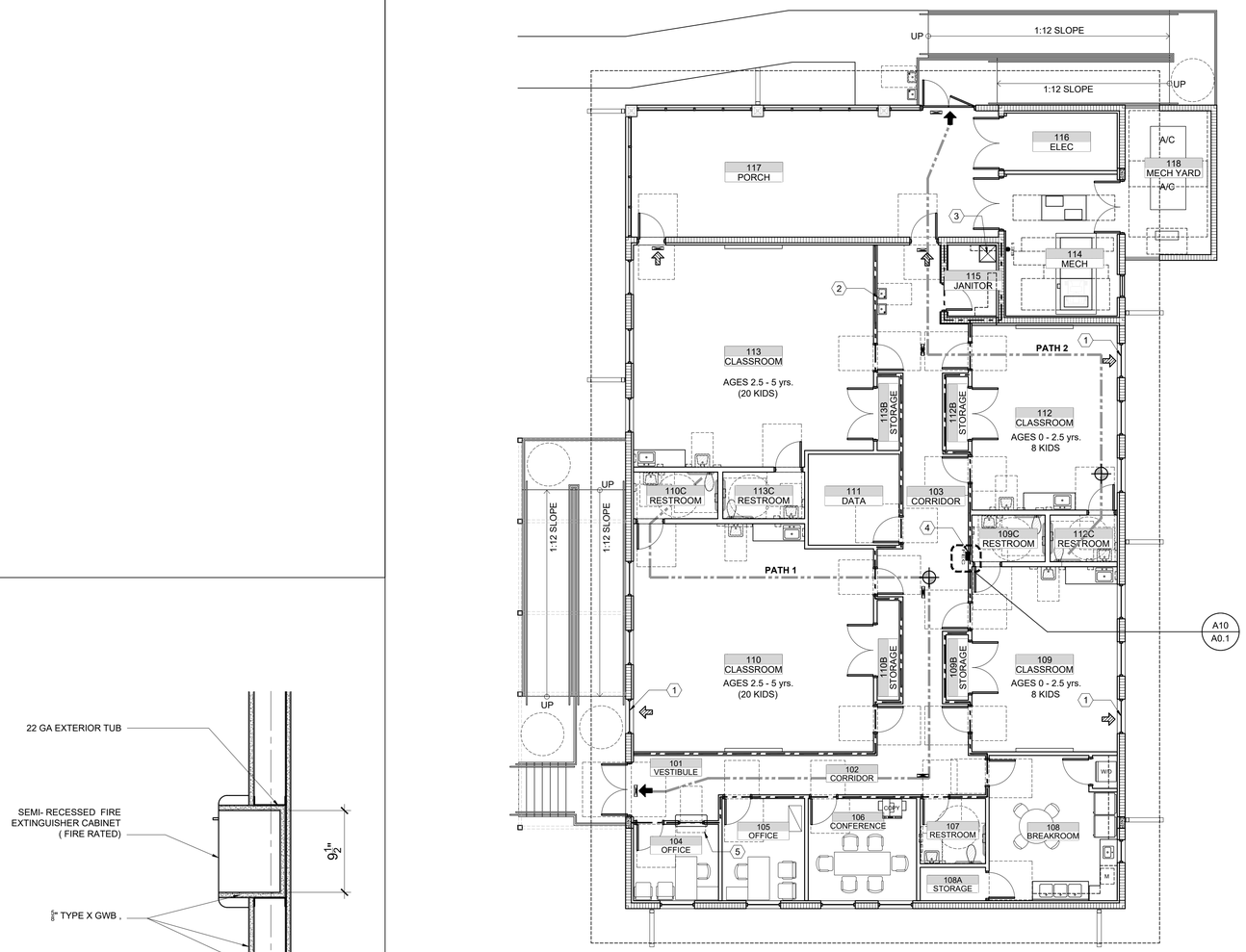

CABINET PLAN
1 1/2" = 1'-0"
A10

LIFE SAFETY PLAN
1/8" = 1'-0"
A3

PROJECT SUMMARY

NEW HEAD START CLASSROOM BUILDING, PARKING AND EXTERIOR PLAY AREA(S) FOR HILLSBOROUGH COUNTY.

LIFE SAFETY AND CODE DATA

CODE REFERENCES

FLORIDA BUILDING CODE 6TH EDITION (FBC 2017) - BUILDING, MECHANICAL, PLUMBING, FUEL GAS, ELECTRICAL, ENERGY CONSERVATION

NFPA 70, NATIONAL ELECTRICAL CODE 2011
FLORIDA FIRE PREVENTION CODE - 6TH EDITION

BUILDING DATA

- CONSTRUCTION TYPE: **TYPE V-B**
- **UNSPRINKLERED** BUILDING (FBC 903.23) <12,000 SQUARE FEET IN AREA.
- OCCUPANCY TYPE: EDUCATIONAL GROUP E - DAY CARE FACILITIES
- HEIGHT: **19'-10"** (40'-0" MAX)
- STORIES: **1** (1 MAX)
- AREA: **5,413 GSF** (9,500 SF MAX)
- RISK CATEGORY: **II**
- WIND SPEED: **142 MPH (VULT)**
- IMPACT RESISTANCE: **YES**

OCCUPANT LOAD

FBC TABLE 1004.1.2 - GROSS & NET SF/OCCUPANT

DAYCARE:	2,145 SF / 35 SF PER OCCUPANT 62 OCCUPANTS
OFFICE:	602 SF / 100F PER OCCUPANT 6 OCCUPANTS

TOTAL NUMBER OF OCCUPANTS = 70 OCCUPANTS

MEANS OF EGRESS REQUIREMENTS

- MAX. TRAVEL DISTANCE TO EXIT: 200'-0" (TABLE 1017.2)
- COMMON PATH OF TRAVEL: 75'-0" (TABLE 1006.2.1)
- MIN. NUMBER OF EXITS (1015.1): **2** (2 PROVIDED - OK)
- EGRESS WIDTH (FBC1005.3) 0.3"/OCCUPANT: **21" REQ** (108" PROVIDED - OK)
- MIN CORRIDOR WIDTH (1020.2): **44" MIN** (55" - OK)
- CORRIDOR FIRE-RESISTANCE RATED (TABLE1020.1) OCCUPANCY E - OCCUPANT LOAD > 30 REQUIRED A 1HR RESISTANCE RATING CORRIDOR.

PATH 1

46'-2"	COMMON PATH OF TRAVEL (<75' OK)
103'-10"	DISTANCE TO EXIT (<200' OK)

PATH 2

11'-0"	COMMON PATH OF TRAVEL (<75' OK)
56'-10"	DISTANCE TO EXIT (<200' OK)

PLUMBING FIXTURES (TABLE P403.1)

REQUIRED			PROVIDED		
WC	LAV	UR	WC	LAV	UR
2	2	--	5	5	--

- 1 SERVICE SINK PROVIDED
- DRINKING FOUNTAINS: 1 REQ'D (HI-LO PROVIDED)

SPECIFIC NOTES

1. WINDOW FOR RESCUE (NFPA16.2.11.1).
2. DRINKING FOUNTAIN.
3. SERVICE SINK.
4. FIRE EXTINGUISHER.
5. FIRE-RATED ROLLING COUNTER SHUTTER.

LIFE SAFETY LEGEND

- PRIMARY EXIT
- EXIT ACCESS
- SECONDARY EGRESS
- END OF COMMON PATH OF TRAVEL
- 1 HOUR RATED PARTITION
- SMOKE RATED PARTITION
- TRAVEL DISTANCES
- EXIT SIGN
- BRACKET MTD FIRE EXTINGUISHER
- CABINET MTD FIRE EXTINGUISHER

NOTES
A1

1315 E. Seventh Avenue
Suite 106
Tampa, Florida 33605.3607

Telephone 813.242.6677
Facsimile 813.242.6683

wilderarchitecture.com

AA26000555

WILDERARCHITECTURE, INC.

HILLSBOROUGH COUNTY BOARD
OF COUNTY COMMISSIONERS
COUNTY CENTER
601 E KENNEDY BLVD
TAMPA, FL 33601

HILLSBOROUGH COUNTY
NORTHWEST AREA HEAD START

PROJECT #: 2010-00

Distribution	Date
90% CONST DOCS	08.19.2020

LIFE SAFETY PLAN

A0.1

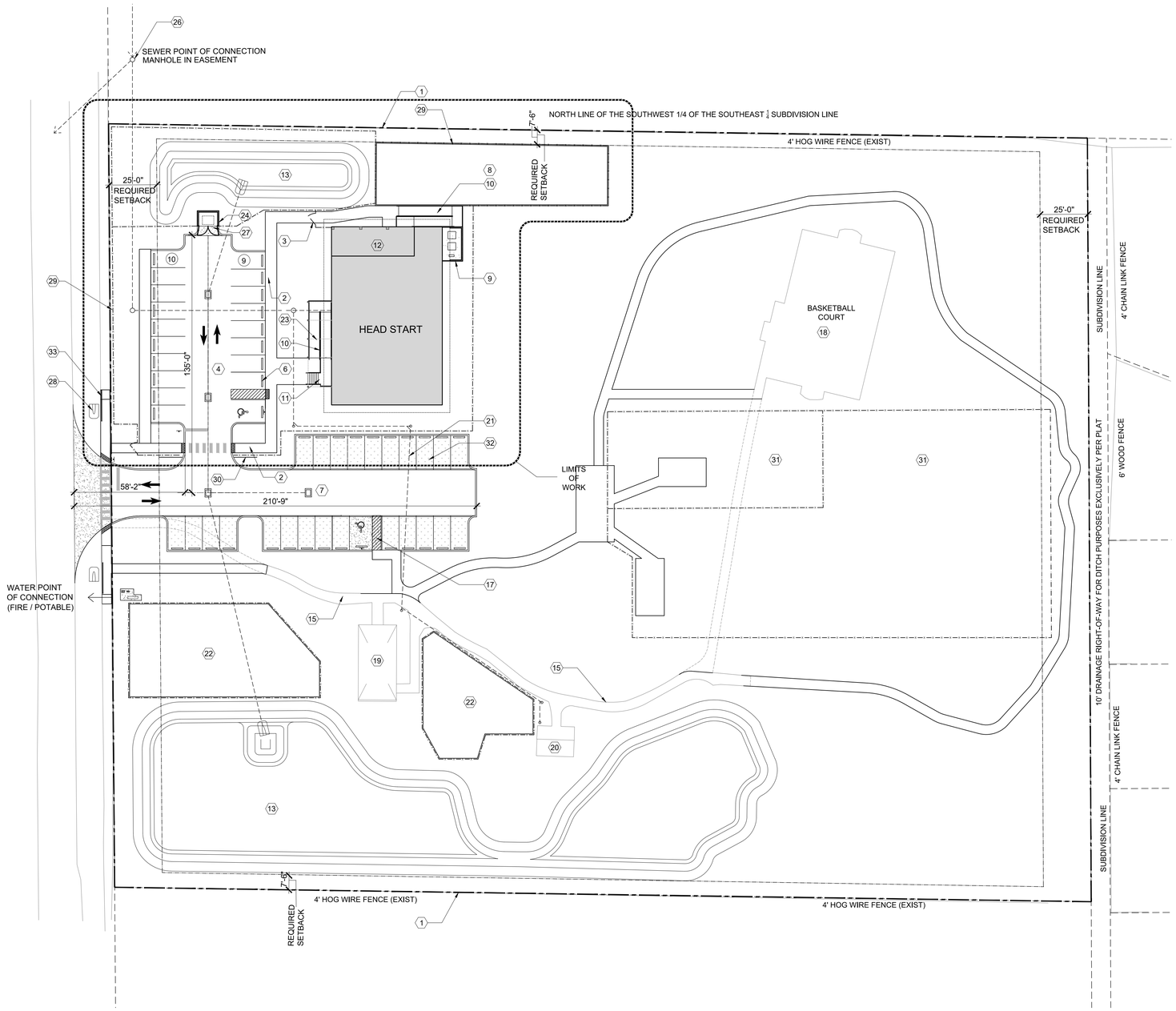

CODE DATA

ZONING

ZONING MAP
- SEC 35-28-17
- BA-35

RSC-6- RESIDENTIAL - SINGLE FAMILY CONVENTIONAL

DAY CARE- **SPECIAL USES, NOTICED PUBLIC HEARING REQUIRED AND SUBJECT TO STANDARDS OF ARTICLE VI** (SEC. 2.02.02.-ALLOWABLE USES IN ZONING DISTRICTS)

REQUIRED YARDS
- FRONT 25'-0"
- SIDE 7'-6"
- REAR 25'-0"

MAXIMUM HEIGHT - 35'-0" (ACTUAL- 19'-10"- OK)

MAXIMUM PERCENT
- BUILDING COVERAGE 40% (ACTUAL- 3%- OK)
- IMPERVIOUS SURFACE N/A

REQUIRED PARKING SPACES
- CHILD CARE CENTER - 3.2 SPACES PER 1,000 SQ. FT. GFA
- 5,413 SF / 3.2 = 18 SPACES.

AGENCIES WITH JURISDICTION OVER THE SITE

- SOUTHWEST FLORIDA WATER MANAGEMENT (STORMWATER)
- HILLSBOROUGH COUNTY (SITE SEWER)
- CITY OF TAMPA (WATER)
- FLORIDA DEPARTMENT OF ENVIRONMENTAL PROTECTION - FLORIDA DEPARTMENT OF HEALTH (WATER)
- FLORIDA DEPARTMENT OF ENVIRONMENTAL PROTECTION - ENVIRONMENTAL PROTECTION COMMISSION (SEWER)
- FEMA 100-YEAR

TYPE AND LOCATION OF GEOTECHNICAL
- HAND AUGERS IN THE VICINITY OF THE PAVEMENT AND POND
- FLEXIBLE AND RIGID PAVEMENT RECOMMENDATIONS.
- HEAVY AND LIGHT PAVEMENT RECOMMENDATIONS.
- THE SHGWT ESTIMATION
- DRI TEST 1' DOWN.
- 3 BORINGS FOR THE BUILDING.

SPECIFIC NOTES

1. PROPERTY LINE
2. NEW CONC SIDEWALK
3. GATE
4. PARKING. (ASPHALT)
5. CONC CURB, TYP.
6. WHEEL STOP, TYP.
7. ASPHALT DRIVE
8. NEW PLAYGROUND AREA
9. MECHANICAL AREA (ELEVATED TO FIN. FLR)
10. CONC RAMP
11. CONC STAIRS
12. SCREENED PORCH
13. STORM WATER POND
14. STORM WATER POND(FUTURE)
15. EXIST CONC SIDEWALK
16. EXIST FENCE
17. NEW HANDICAP PARKING (CONC)
18. EXIST BASKETBALL COURT TO REMAIN
19. EXIST GAZEBO
20. EXIST RESTROOMS
21. NEW SEWER LINE, REFER TO CIVIL DWGS.
22. PLAYGROUND (FUTURE)
23. ALUM TRELLIS
24. DUMPSTER ENCLOSURE, GATED
25. NEW MANHOLE, REFER TO CIVIL DWGS.
26. EXIST MANHOLE
27. NEW CONC PAVEMENT
28. NEW MITERED END SECTION
29. FENCE.
30. PARKING GATE
31. PARK DOG (FUTURE)
32. GRASS PARKING (FUTURE)
33. RAILING

1315 E. SEVENTH AVENUE
SUITE 106
TAMPA, FLORIDA 33605.3607

TELEPHONE 813.242.6677
FACSIMILE 813.242.6683

wilderarchitecture.com

AA26000555

WILDERARCHITECTURE, INC.

HILLSBOROUGH COUNTY BOARD
OF COUNTY COMMISSIONERS
COUNTY CENTER
601 E KENNEDY BLVD
TAMPA, FL 33601

HILLSBOROUGH COUNTY
NORTHWEST AREA HEAD START

PROJECT #: 2010-00

DISTRIBUTION	DATE
SCHEMATIC DESIGN	05.01.2020
DESIGN DEVELOPMENT	06.11.2020
90% CONST DOCS	08.19.2020

OVERALL
SITE PLAN

A1.1

0 15' 30' 60'

OVERALL SITE PLAN 1"=30' A3

NOTES A1

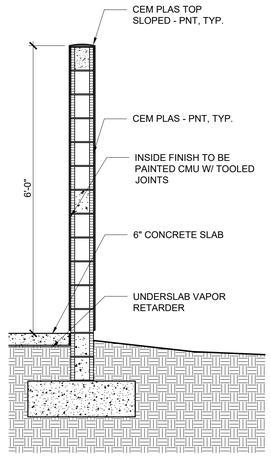

DUMPSTER ENCLOSURE SECTION G13
1/2"=1'-0"

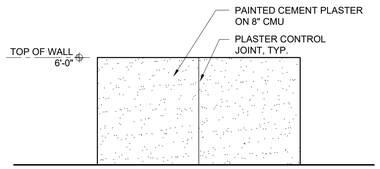

DUMPSTER ENCLOSURE NORTH ELEVATION E13
1/4"=1'-0"

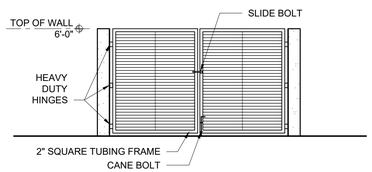

DUMPSTER ENCLOSURE SOUTH ELEVATION C13
1/4"=1'-0"

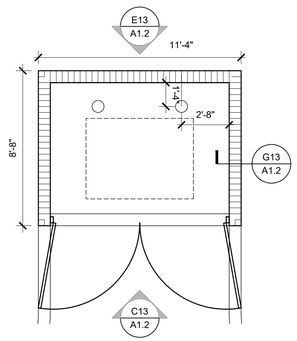

DUMPSTER ENCLOSURE PLAN A13
1/4"=1'-0"

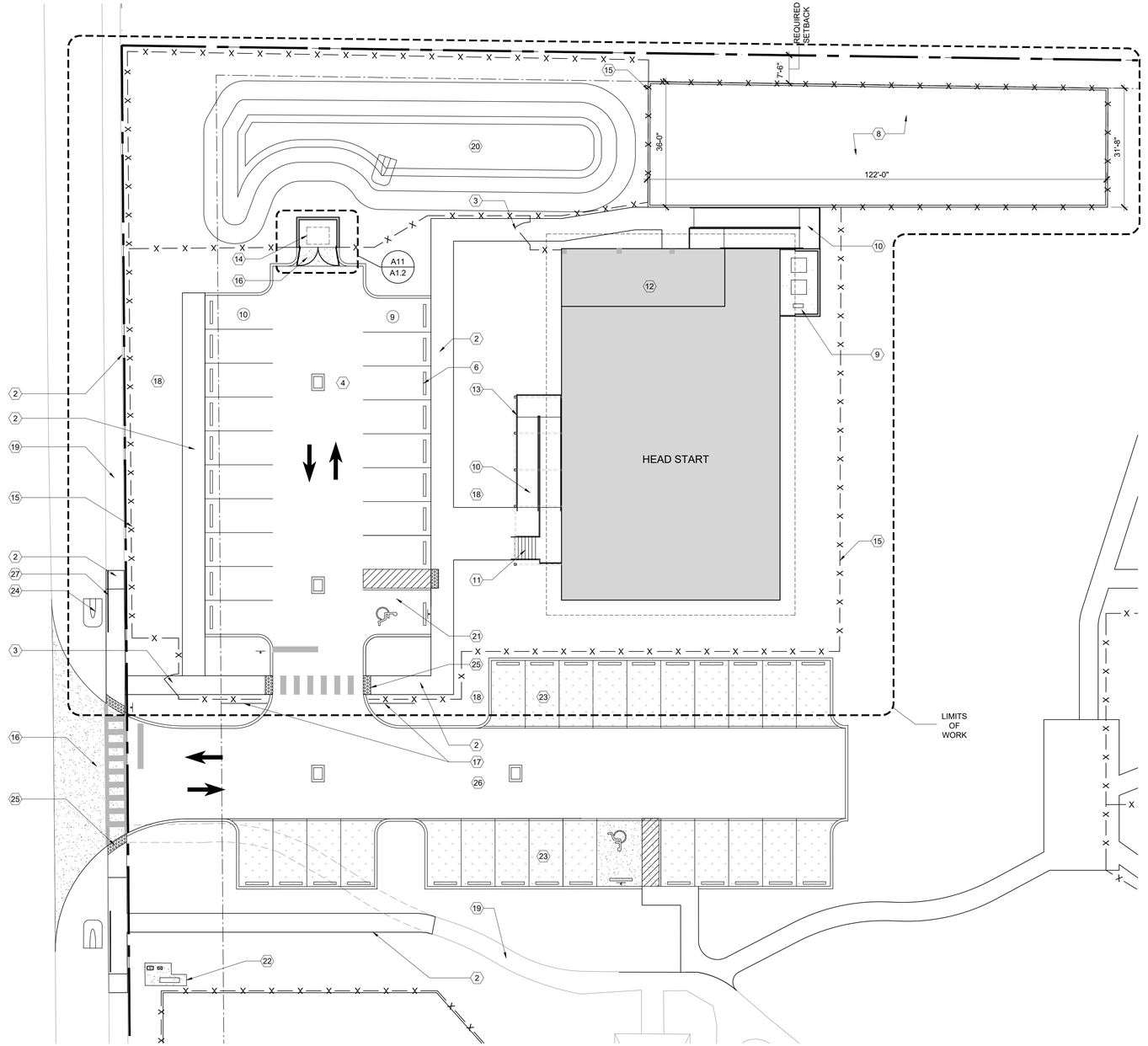

0 8' 16' 32'

SITE PLAN A3
1/16"=1'-0"

GENERAL NOTES

1. .

SPECIFIC NOTES

1. PROPERTY LINE
2. NEW CONC SIDEWALK
3. CHAIN LINK GATE. VINYL COATED, SMALL OPENINGS, WITH TOP TURNED DOWN.
4. PARKING. (ASPHALT)
5. CONC CURB, TYP.
6. WHEEL STOP, TYP.
7. ASPHALT DRIVE
8. NEW PLAYGROUND AREA
9. MECHANICAL AREA (ELEVATED TO FIN. FLR)
10. CONC RAMP
11. CONC STAIRS
12. SCREENED PORCH
13. ALUM TRELLIS
14. DUMPSTER ENCLOSURE, GATED
15. CHAIN LINK FENCE. VINYL COATED, SMALL OPENINGS, WITH TOP TURNED DOWN.
16. NEW CONC PAVEMENT
17. ROLLING CHAIN LINK GATE. VINYL COATED, SMALL OPENINGS, WITH TOP TURNED DOWN
18. SOD AREA
19. EXIST SIDEWALK.
20. STORM WATER POND
21. HANDICAP PARKING
22. NEW POTABLE WATER METER
23. GRASS PARKING
24. NEW MITERED END SECTION
25. DETECTABLE WARNINGS
26. ASPHALT DRIVE
27. RAILING

NOTES A1

1315 E. SEVENTH AVENUE
SUITE 106
TAMPA, FLORIDA 33605.3607

TELEPHONE 813.242.6677
FACSIMILE 813.242.6683

wilderarchitecture.com

AA26000655

WILDERARCHITECTURE, INC.

HILLSBOROUGH COUNTY BOARD
OF COUNTY COMMISSIONERS
COUNTY CENTER
601 E KENNEDY BLVD
TAMPA, FL 33601

HILLSBOROUGH COUNTY
NORTHWEST AREA HEAD START

PROJECT #: 2010-00

DISTRIBUTION	DATE
DESIGN DEVELOPMENT	06.11.2020
90% CONST DOCS	08.19.2020

SITE PLAN

A1.2

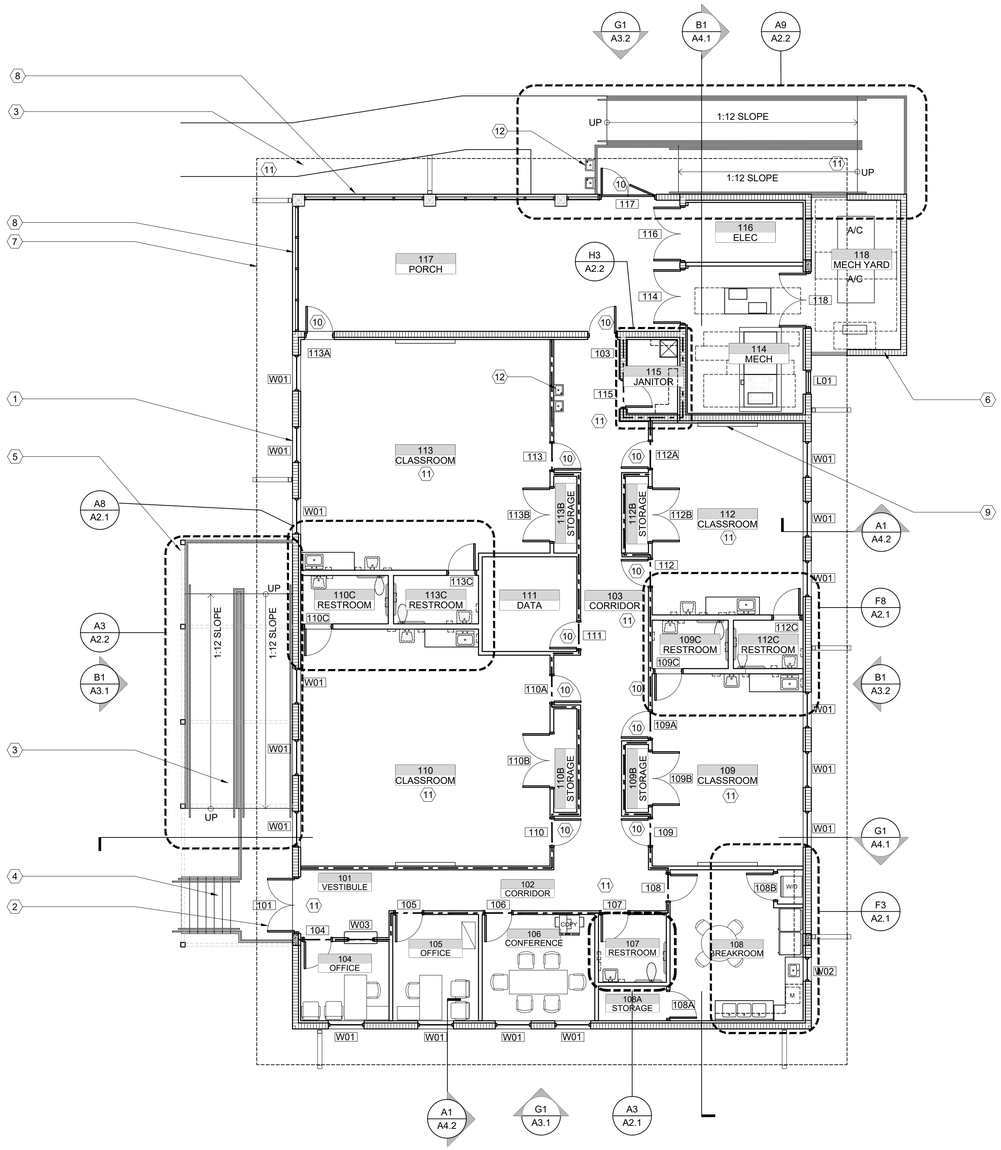

GENERAL NOTES

1. PROVIDE CORNER GUARDS AT EXPOSED GWB PTN CORNERS, TYP.
2. EXTEND RATED WALL CONTINUOUSLY, VERTICALLY TO ROOF DECK.
3. PROVIDE WD BLOCKING FOR ITEMS TO BE MOUNTED AT GWB LOCATIONS. COORDINATE WITH PTN TYPE, MAINTAINING RATINGS, STC VALUES, INSULATION, ETC. IN THE WALL ASSEMBLY, TYP.

SPECIFIC NOTES

1. ALUM WINDOW,TYP.
2. ALUM STOREFRONT ENTRY DOOR. PROVIDE CARD READER AND INTERCOM AT ENTRANCE.
3. CONC RAMP AND ALUM RAILINGS.
4. CONC STAIR AND ALUM RAILINGS.
5. ALUM TRELLIS.
6. CMU SCREEN WALL.
7. OVERHANG (ABOVE), TYP.
8. SCREEN WALL.
9. SMART BOARD, TYP (NIC).
10. ACCESS CONTROL - CARD READER.
11. SECURITY CAMERA. COORDINATE LOCATION WITH OWNER.
12. HI-LO WATER FOUNTAIN.

0 4' 8' 16'

FLOOR PLAN 1/8" = 1'-0" | A3

NOTES | A1

1315 E. SEVENTH AVENUE
SUITE 106
TAMPA, FLORIDA 33605.3607

TELEPHONE 813.242.6677
FACSIMILE 813.242.6683

wilderarchitecture.com

AA26000555

WILDERARCHITECTURE, INC.

HILLSBOROUGH COUNTY BOARD
OF COUNTY COMMISSIONERS
COUNTY CENTER
601 E KENNEDY BLVD
TAMPA, FL 33601

HILLSBOROUGH COUNTY
NORTHWEST AREA HEAD START

PROJECT #: 2010-00

DISTRIBUTION	DATE
SCHEMATIC DESIGN	05.01.2020
DESIGN DEVELOPMENT	06.11.2020
90% CONST DOCS	08.19.2020

FLOOR PLAN

A1.3

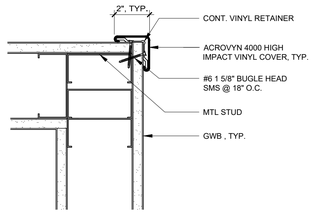

CORNER GUARD DETAIL
3" = 1'-0"
J11

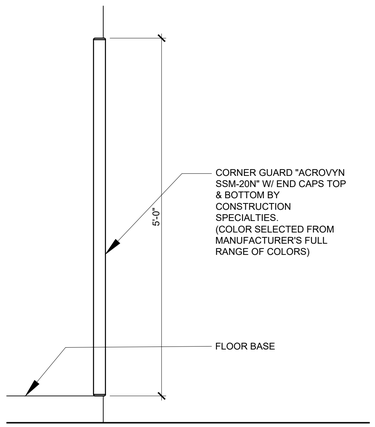

CORNER GUARD ELEVATION
1" = 1'-0"
E11

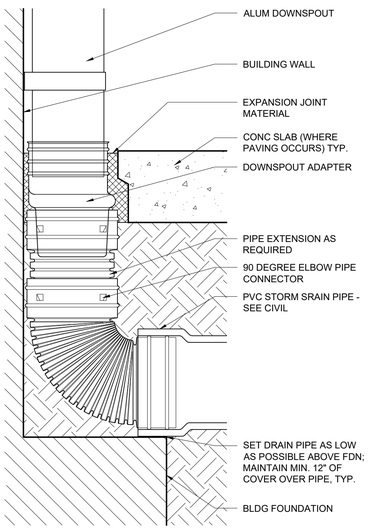

DOWNSPOUT CONNECTION
3" = 1'-0"
A11

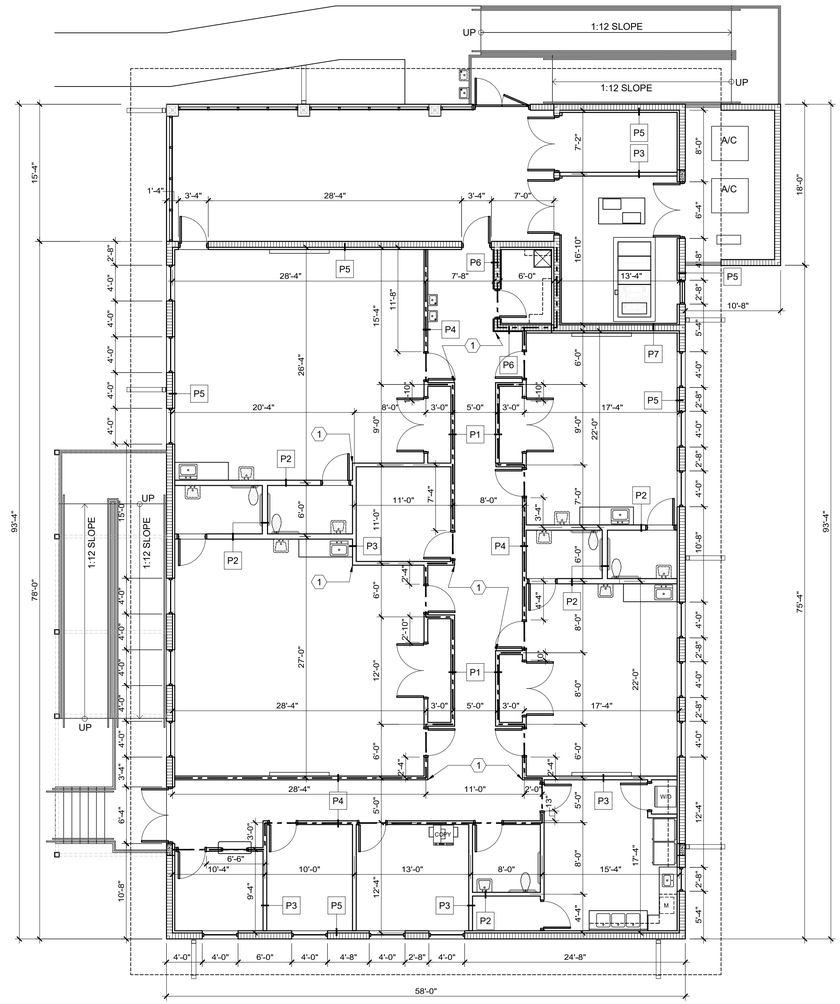

0 4' 8' 16'

DIMENSION PLAN
1/8" = 1'-0"
A3

GENERAL NOTES

1. PROVIDE CORNER GUARDS AT EXPOSED GWB CORNERS, TYP.
2. EXTEND RATED WALL CONTINUOUSLY, VERTICALLY TO ROOF DECK.
3. PROVIDE WD BLOCKING FOR ITEMS TO BE MOUNTED AT GWB LOCATIONS. COORDINATE WITH PTN TYPE, MAINTAINING RATINGS, STC VALUES, INSULATION, ETC. IN THE WALL ASSEMBLY, TYP.

SPECIFIC NOTES

1. CORNER GUARD, TYP. SEE DETAILS E11/A1.4 AND J11/A1.4.

NOTES
A1

1315 E. SEVENTH AVENUE
SUITE 106
TAMPA, FLORIDA 33605.3607

TELEPHONE 813.242.6677
FACSIMILE 813.242.6683

wilderarchitecture.com

AA26000555

WILDERARCHITECTURE, INC.

HILLSBOROUGH COUNTY BOARD
OF COUNTY COMMISSIONERS
COUNTY CENTER
601 E KENNEDY BLVD
TAMPA, FL 33601

HILLSBOROUGH COUNTY
NORTHWEST AREA HEAD START

PROJECT #: 2010-00

DISTRIBUTION	DATE
90% CONST DOCS	08.19.2020

DIMENSION PLAN

A1.4

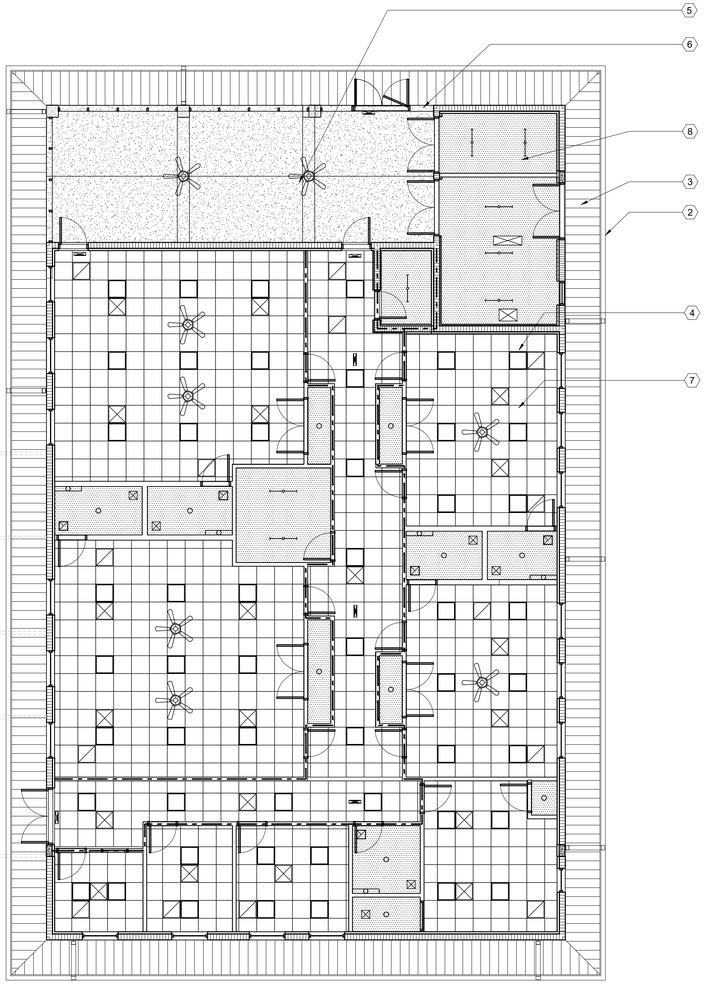

GENERAL NOTES

1. ALL CLGS (APC) ARE 8'-6" AFF (UNO).
2. ALIGN LIGHTS, OUTLETS, ETC. ON APPARENT CENTERLINES, TYP.
3. COORDINATE ALL WORK ABOVE CEILING TO ENSURE LOCATIONS SHOWN FOR ELEC, MECH, FP, AND OTHER SYSTEMS ARE INSTALLED AS SHOWN IN ARCHITECTURAL RCP. WHERE LOCATIONS CREATE A COORDINATION ISSUE ALERT ARCHITECT PRIOR TO BIDDING FOR CLARIFICATION, COORDINATE ACCESS TO ABOVE CLG EQUIPMENT.

SPECIFIC NOTES

1. NOT USED.
2. GUTTER, TYP.
3. MTL SOFFIT PANEL, TYP.
4. LUMINAIRE, TYP.
5. CEILING FAN..
6. CEM PLASTER BEAM, TYP.
7. APC
8. HARD CLG.

N

0 4' 8' 16'

REFLECTED CEILING PLAN
1/8" = 1'-0"

A3

NOTES A1

1315 E. SEVENTH AVENUE
SUITE 106
TAMPA, FLORIDA 33605.3607

TELEPHONE 813.242.6677
FACSIMILE 813.242.6683

wilderarchitecture.com

AA26000555

WILDERARCHITECTURE, INC.

HILLSBOROUGH COUNTY BOARD
OF COUNTY COMMISSIONERS
COUNTY CENTER
601 E KENNEDY BLVD
TAMPA, FL 33601

HILLSBOROUGH COUNTY
NORTHWEST AREA HEAD START

PROJECT #: 2010-00

DISTRIBUTION	DATE
DESIGN DEVELOPMENT	06.11.2020
90% CONST DOCS	08.19.2020

REFLECTED
CEILING PLAN

A1.5

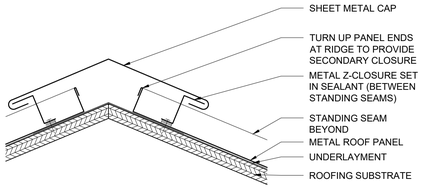

TYPICAL ROOF FLASHING DETAIL
3" = 1'-0" | K11

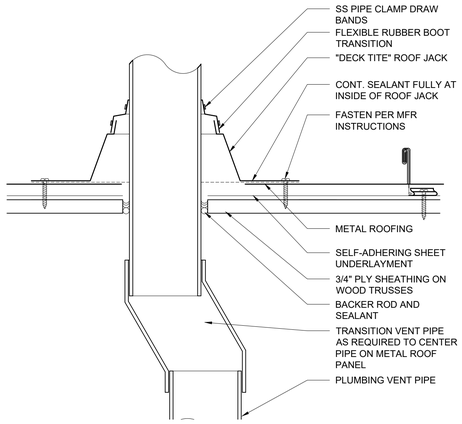

TRANSITION BOOT VENT DETAIL
3" = 1'-0" | F11

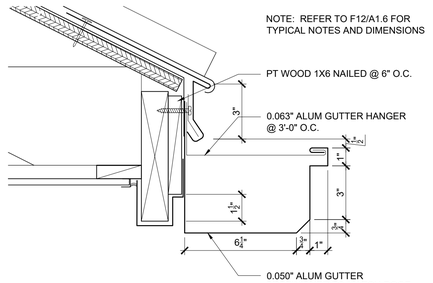

ROOF EDGE DETAIL
3" = 1'-0" | D11

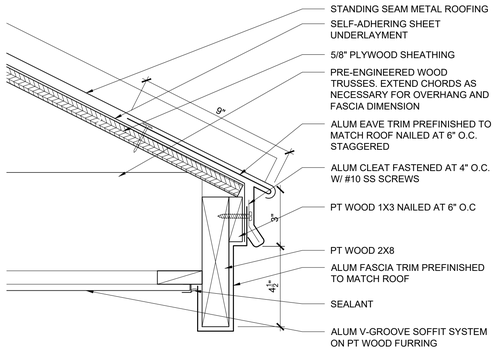

ROOF EDGE DETAIL
3" = 1'-0" | A11

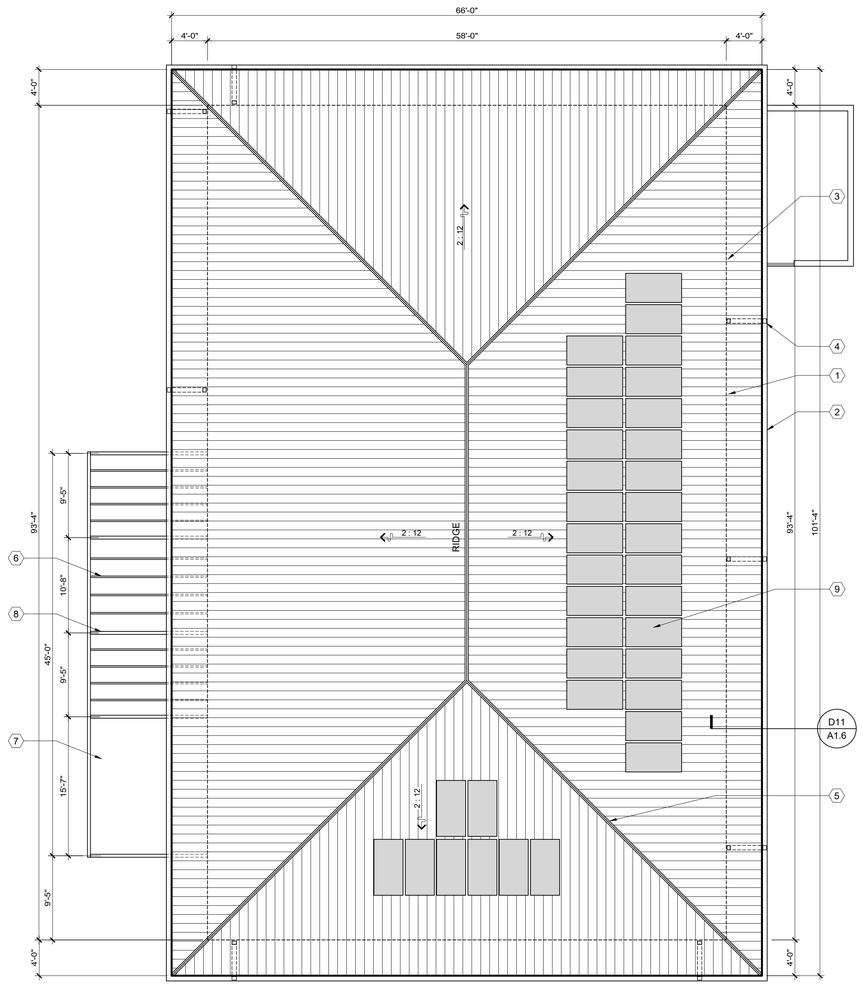

0 4' 8' 16'

ROOF PLAN
1/8" = 1'-0" | A3

GENERAL NOTES
1. MTL ROOF SLOPE IS 2:12, TYP.
2. ROOF OVERHANG IS 4'-0", TYP.

SPECIFIC NOTES
1. FACE OF WALL BELOW CMU, TYP.
2. MTL GUTTER, TYP.
3. MTL DOWNSPOUT, TYP.
4. DS CONNECTION TO GUTTER, TYP.
5. RIDGE CAP, TYP.
6. ALUM TRELLIS.
7. ALUM RAIN COVER.
8. ALUM STRUCTURAL MEMBER.
9. SOLAR PANELS, TYP. REFER TO ELECTRICAL DWGS

NOTES | A1

1315 E. SEVENTH AVENUE
SUITE 106
TAMPA, FLORIDA 33605.3607

TELEPHONE 813.242.6677
FACSIMILE 813.242.6683

wilderarchitecture.com

AA26000555

WILDERARCHITECTURE, INC.

HILLSBOROUGH COUNTY BOARD
OF COUNTY COMMISSIONERS
COUNTY CENTER
601 E KENNEDY BLVD
TAMPA, FL 33601

HILLSBOROUGH COUNTY
NORTHWEST AREA HEAD START

PROJECT #: 2010-00

DISTRIBUTION	DATE
DESIGN DEVELOPMENT	06.11.2020
90% CONST DOCS	08.19.2020

ROOF PLAN

A1.6

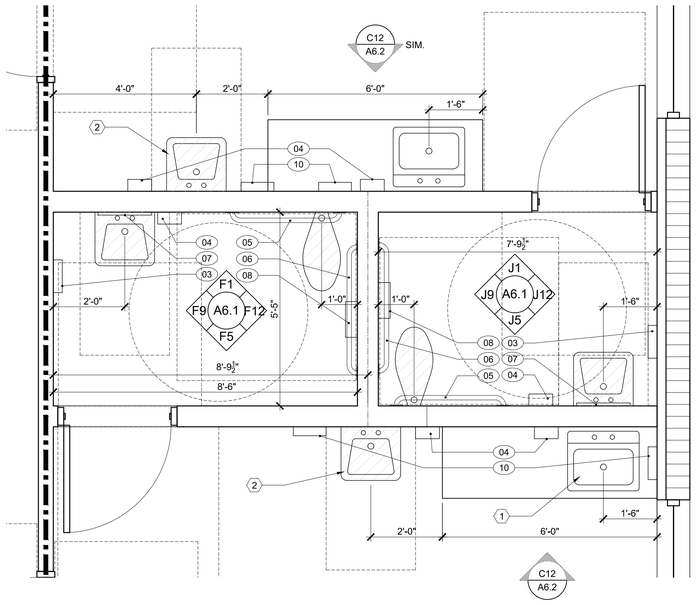

N

0 1' 2' 4'

ENLARGED BATHROOM PLAN F8
1/2" = 1'-0"

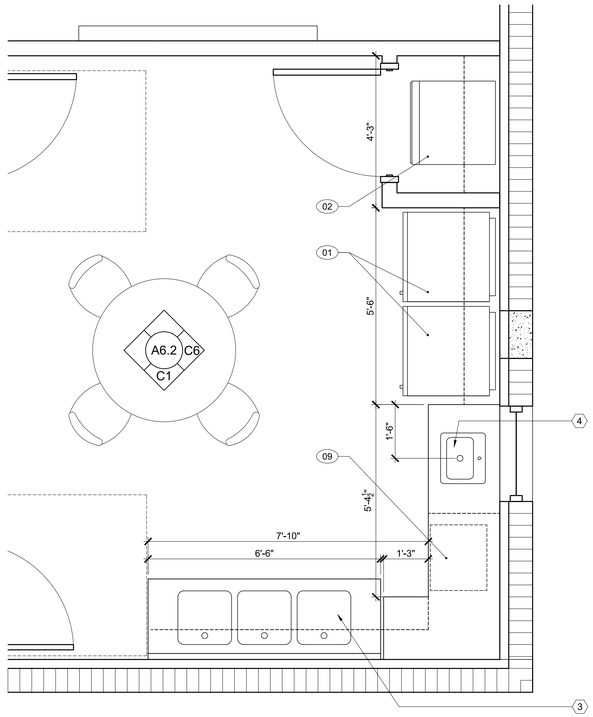

N

0 1' 2' 4'

ENLARGED BREAKROOM PLAN F3
1/2" = 1'-0"

EQUIPMENT/ACCESSORIES SCHEDULE (01)

01	REFRIGERATOR
02	WASHER/DRYER
03	HAND DRYER
04	SOAP DISPENSER
05	GRAB BAR - 36"
06	GRAB BAR - 42"
07	MIRROR UNIT
08	TOILET PAPER DISPENSER
09	MICROWAVE
10	PAPER TOWEL DISPENSER

GENERAL NOTES

1. PROVIDE UNDER LAVATORY GUARDS AT RESTROOMS, TYP.

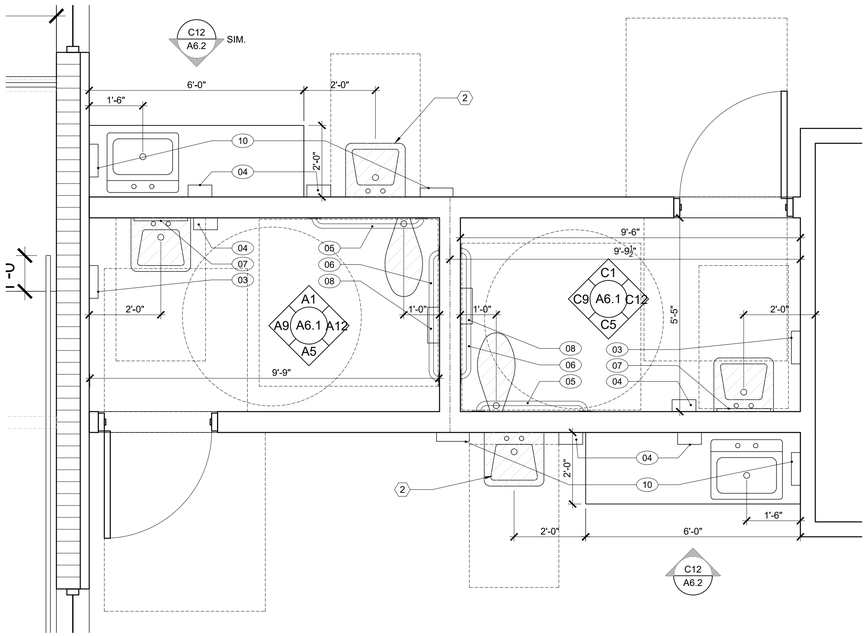

N

0 1' 2' 4'

ENLARGED BATHROOM PLAN A8
1/2" = 1'-0"

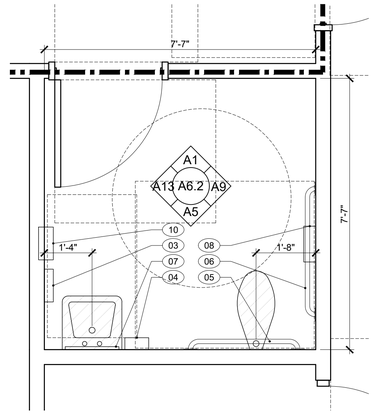

N

0 1' 2' 4'

ENLARGED BATHROOM PLAN A3
1/2" = 1'-0"

SPECIFIC NOTES

1. SINK
2. LAVATORY (CHILD)
3. THREE COMPARTMENT SINK
4. SINK WITH ELECTRICS FOR WASTE DISPOSAL.

NOTES A1

1315 E. SEVENTH AVENUE
SUITE 106
TAMPA, FLORIDA 33605.3607

TELEPHONE 813.242.6677
FACSIMILE 813.242.6683

wilderarchitecture.com

AA26000555

WILDERARCHITECTURE, INC.

HILLSBOROUGH COUNTY BOARD
OF COUNTY COMMISSIONERS
COUNTY CENTER
601 E KENNEDY BLVD
TAMPA, FL 33601

HILLSBOROUGH COUNTY
NORTHWEST AREA HEAD START

PROJECT #: 2010-00	
DISTRIBUTION	DATE
90% CONST DOCS	08.19.2020

ENLARGED PLANS

A2.1

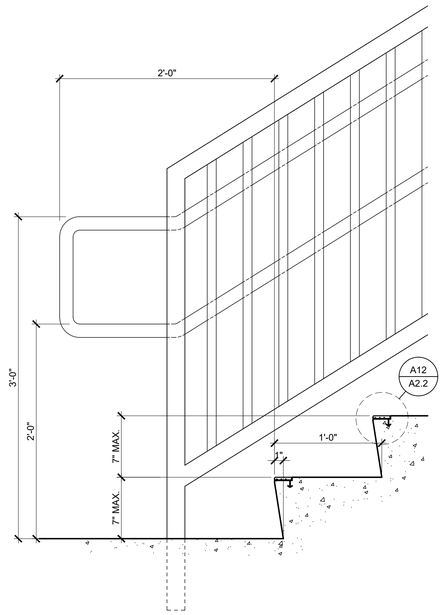

STAIR / GUARDRAIL DETAIL
1-1/2" = 1'-0" G12

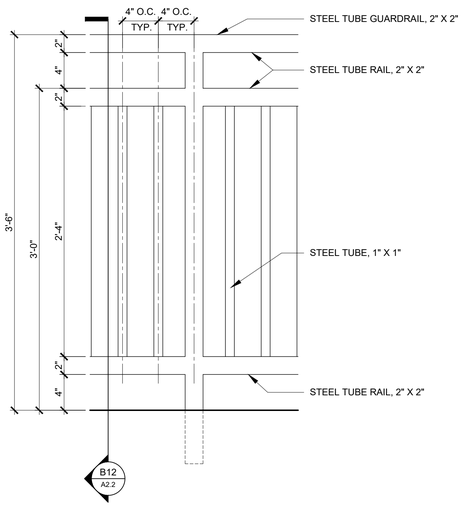

GUARDRAIL ELEVATION DETAIL
1-1/2" = 1'-0" H7

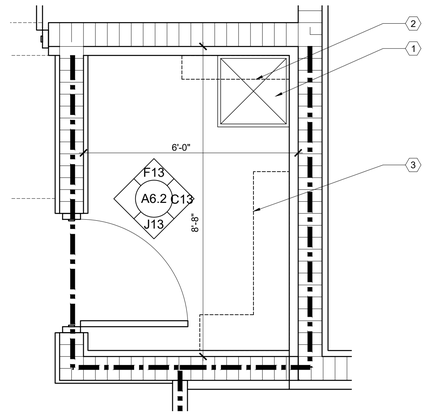

0 1' 2' 4'

ENLARGED JANITOR'S CLOSET PLAN
1/2" = 1'-0" H3

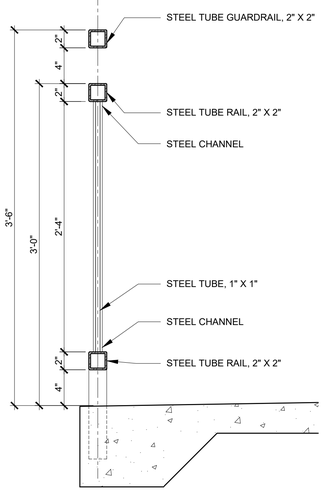

GUARDRAIL SECTION
1-1/2" = 1'-0" B12

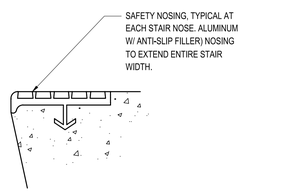

STAIR NOSING DETAIL
N.T.S. A12

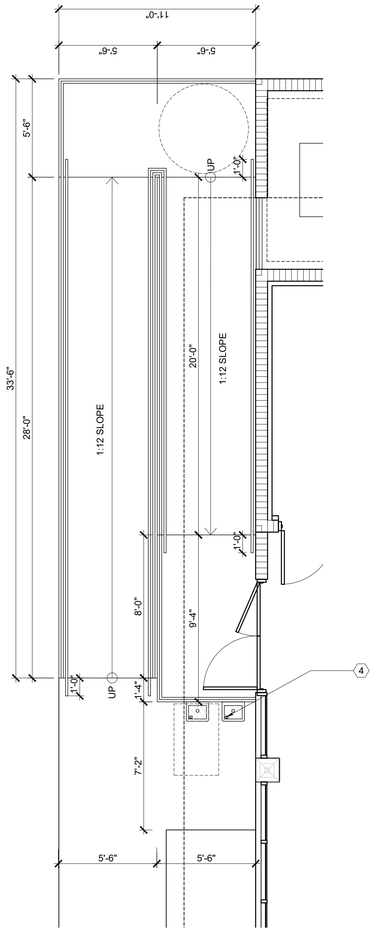

0 2' 4' 8'

ENLARGED ACCESSIBILITY RAMP PLAN
1/4" = 1'-0" A9

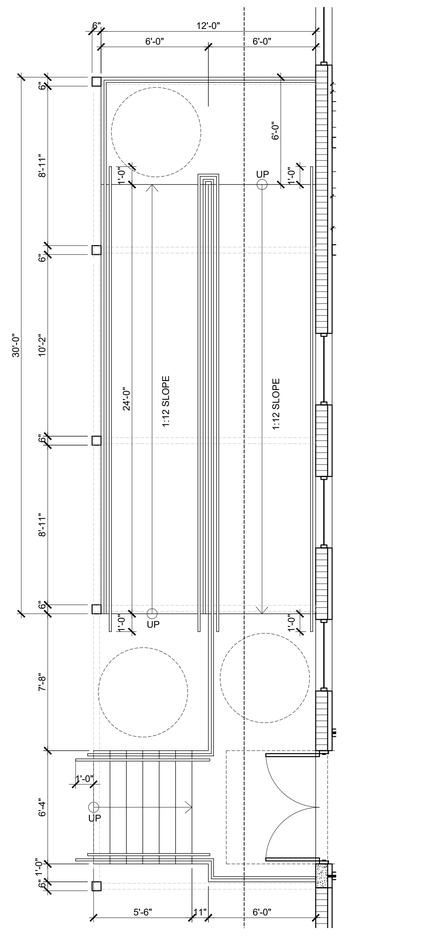

0 2' 4' 8'

ENLARGED ACCESSIBILITY RAMP PLAN
1/4" = 1'-0" A3

GENERAL NOTES

1. --

SPECIFIC NOTES

1. SERVICE SINK
2. MOP HOLDER
3. 12" DEEP SHELVE
4. HI-LO WATER FOUNTAIN.

NOTES A1

1315 E. SEVENTH AVENUE
SUITE 106
TAMPA, FLORIDA 33605.3607

TELEPHONE 813.242.6677
FACSIMILE 813.242.6683

wilderarchitecture.com

AA26000655

WILDERARCHITECTURE, INC.

HILLSBOROUGH COUNTY BOARD
OF COUNTY COMMISSIONERS
COUNTY CENTER
601 E KENNEDY BLVD
TAMPA, FL 33601

HILLSBOROUGH COUNTY
NORTHWEST AREA HEAD START

PROJECT #: 2010-00	
DISTRIBUTION	DATE
90% CONST DOCS	08.19.2020

ENLARGED PLANS

A2.2

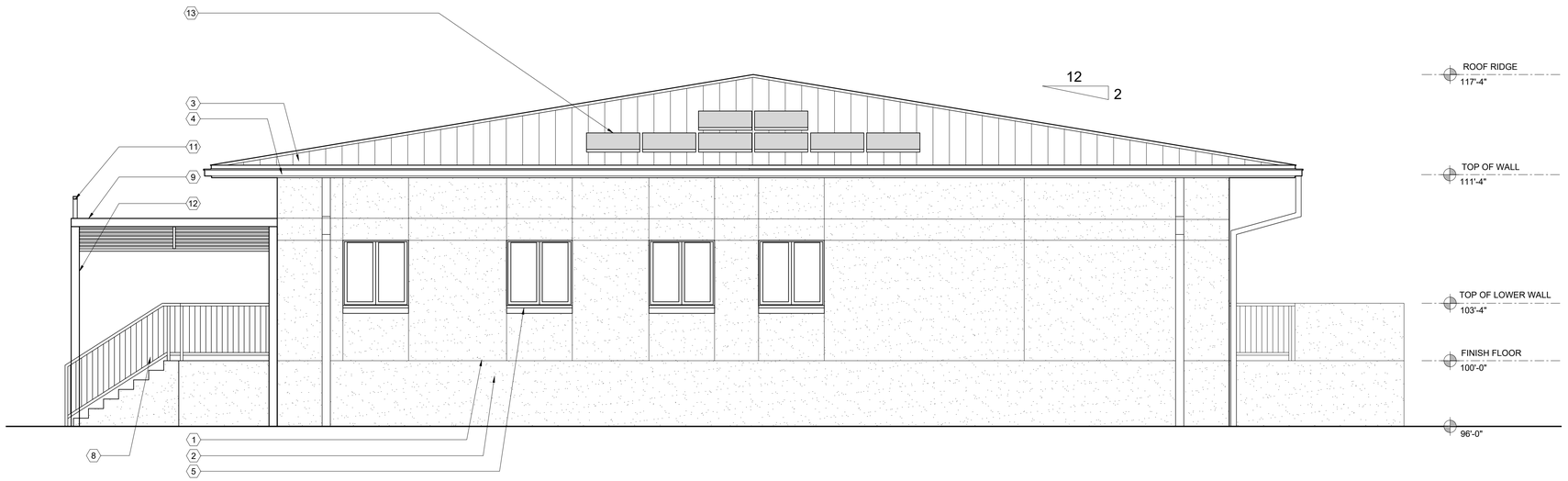

0 2' 4' 8'

SOUTH ELEVATION
1/4" = 1'-0"

G1



0 2' 4' 8'

WEST ELEVATION
1/4" = 1'-0"

B1

SPECIFIC NOTES

1. PLASTER CONTROL JOINT, TYP.
2. CEM PLAS - PNT, TYP.
3. STANDING SEAM MTL ROOF SYSTEM, TYP.
4. PRE-FINISHED ALUM GUTTER & DOWNSPOUT, TYP.
5. ALUM WINDOW, TYP.
6. ALUM STOREFRONT ENTRY DOOR
7. CONC RAMP AND ALUM RAILINGS.
8. CONC STAIR AND ALUM RAILINGS.
9. ALUM TRELLIS.
10. SCREEN WALL.
11. CUT ALUM SIGNAGE.
12. ALUM COLUMN.
13. SOLAR PANELS, TYP. (REFER TO E-SERIES).

GENERAL NOTES

1. EXT OPENINGS (WINDOWS, DOORS, LOUVERS, ETC.) SHALL BE IMPACT RESISTANT, TYP.

NOTES

A1

1315 E. SEVENTH AVENUE
SUITE 106
TAMPA, FLORIDA 33605.3607

TELEPHONE 813.242.6677
FACSIMILE 813.242.6683

wilderarchitecture.com

AA26000655

WILDERARCHITECTURE, INC.

HILLSBOROUGH COUNTY BOARD
OF COUNTY COMMISSIONERS
COUNTY CENTER
601 E KENNEDY BLVD
TAMPA, FL 33601

HILLSBOROUGH COUNTY
NORTHWEST AREA HEAD START

PROJECT #: 2010-00	
DISTRIBUTION	DATE
SCHEMATIC DESIGN	05.01.2020
DESIGN DEVELOPMENT	06.11.2020
90% CONST DOCS	08.19.2020

EXTERIOR
ELEVATIONS

A3.1



0 2' 4' 8'

SOUTH ELEVATION
1/4" = 1'-0"

G1

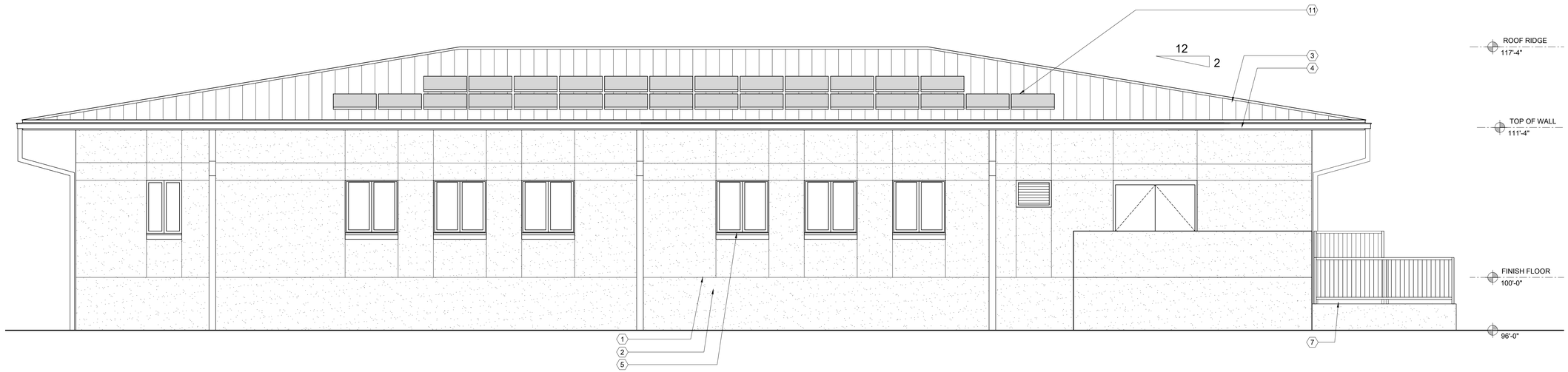

0 2' 4' 8'

WEST ELEVATION
1/4" = 1'-0"

B1

SPECIFIC NOTES

1. PLASTER CONTROL JOINT, TYP.
2. CEM PLAS - PNT, TYP.
3. STANDING SEAM MTL ROOF SYSTEM, TYP.
4. PRE-FINISHED ALUM GUTTER & DOWNSPOUT, TYP.
5. ALUM WINDOW, TYP.
6. ALUM STOREFRONT ENTRY DOOR
7. CONC RAMP AND ALUM RAILINGS.
8. CONC.STAIR AND ALUM RAILINGS.
9. ALUM TRELLIS.
10. SCREEN WALL.
11. SOLAR PANELS, TYP. (REFER TO E-SERIES).

GENERAL NOTES

1. EXT OPENINGS (WINDOWS, DOORS, LOUVERS, ETC.) SHALL BE IMPACT RESISTANT, TYP.

NOTES

A1

1315 E. SEVENTH AVENUE
SUITE 106
TAMPA, FLORIDA 33605.3607

TELEPHONE 813.242.6677
FACSIMILE 813.242.6683

wilderarchitecture.com

AA26000655

WILDERARCHITECTURE, INC.

HILLSBOROUGH COUNTY BOARD
OF COUNTY COMMISSIONERS
COUNTY CENTER
601 E KENNEDY BLVD
TAMPA, FL 33601

HILLSBOROUGH COUNTY
NORTHWEST AREA HEAD START

PROJECT #: 2010-00

DISTRIBUTION	DATE
90% CONST DOCS	08.19.2020

EXTERIOR
ELEVATIONS

A3.2

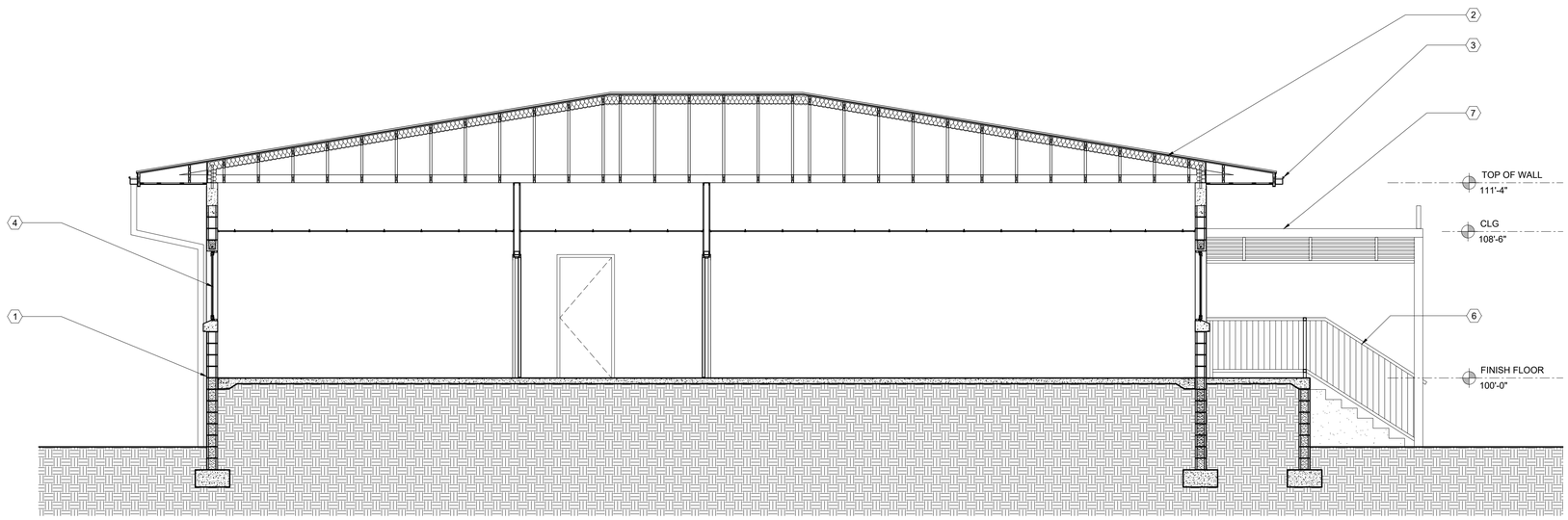

0 2' 4' 8'

BUILDING SECTION
1/4" = 1'-0"

G1

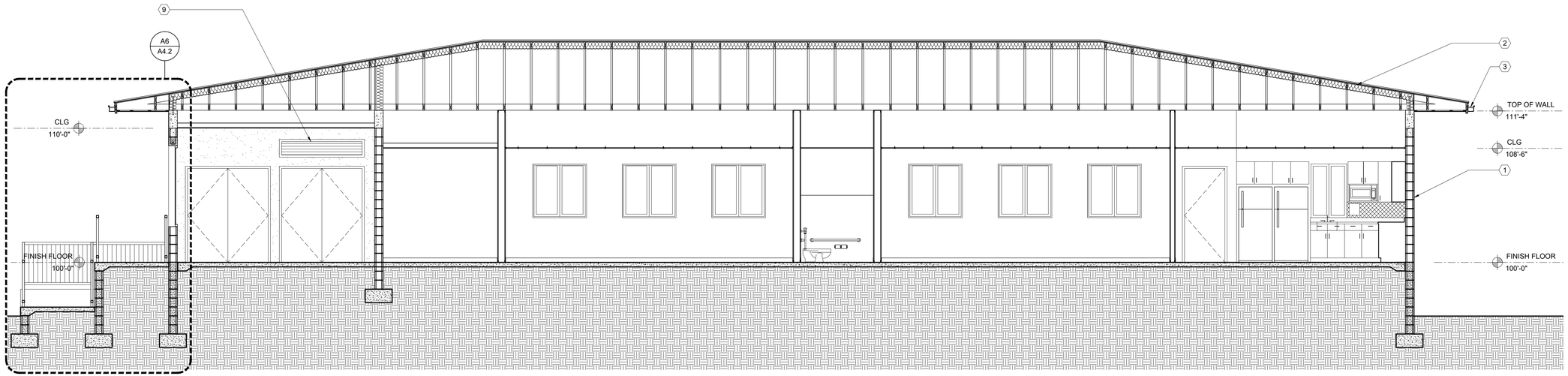

0 2' 4' 8'

BUILDING SECTION
1/4" = 1'-0"

B1

SPECIFIC NOTES

1. CEM PLAS - PNT, TYP.
2. STANDING SEAM MTL ROOFING, TYP.
3. PRE-FINISHED ALUM GUTTER & DOWNSPOUT, TYP.
4. ALUM WINDOWS, TYP.
5. ALUM STOREFRONT ENTRY DOOR
6. CONC STAIR AND ALUM RAILINGS..
7. ALUM TRELLIS.
8. SOLAR PANELS, TYP. REFER TO ELECTRICAL DWGS.
9. ALUM LOUVER.

GENERAL NOTES

1. CLG HT IS 8'-6" TYP. (UNO)
2. RIGID INSUL AT EXT WALLS TO BE INSTALLED CONTINUOUS. OUTLETS, JUNCTION BOXES, ETC TO BE INSTALLED IN MTL STUD SPACE ADJACENT TO CMU WALL / INSUL.
3. PROVIDE CONT THERMAL / VAPOR / AIR ENVELOPE.

NOTES

A1

1315 E. SEVENTH AVENUE
SUITE 106
TAMPA, FLORIDA 33605.3607

TELEPHONE 813.242.6677
FACSIMILE 813.242.6683

wilderarchitecture.com

AA26000655

WILDERARCHITECTURE, INC.

HILLSBOROUGH COUNTY BOARD
OF COUNTY COMMISSIONERS
COUNTY CENTER
601 E KENNEDY BLVD
TAMPA, FL 33601

HILLSBOROUGH COUNTY
NORTHWEST AREA HEAD START

PROJECT #: 2010-00	
DISTRIBUTION	DATE
90% CONST DOCS	08.19.2020

BUILDING SECTIONS

A4.1

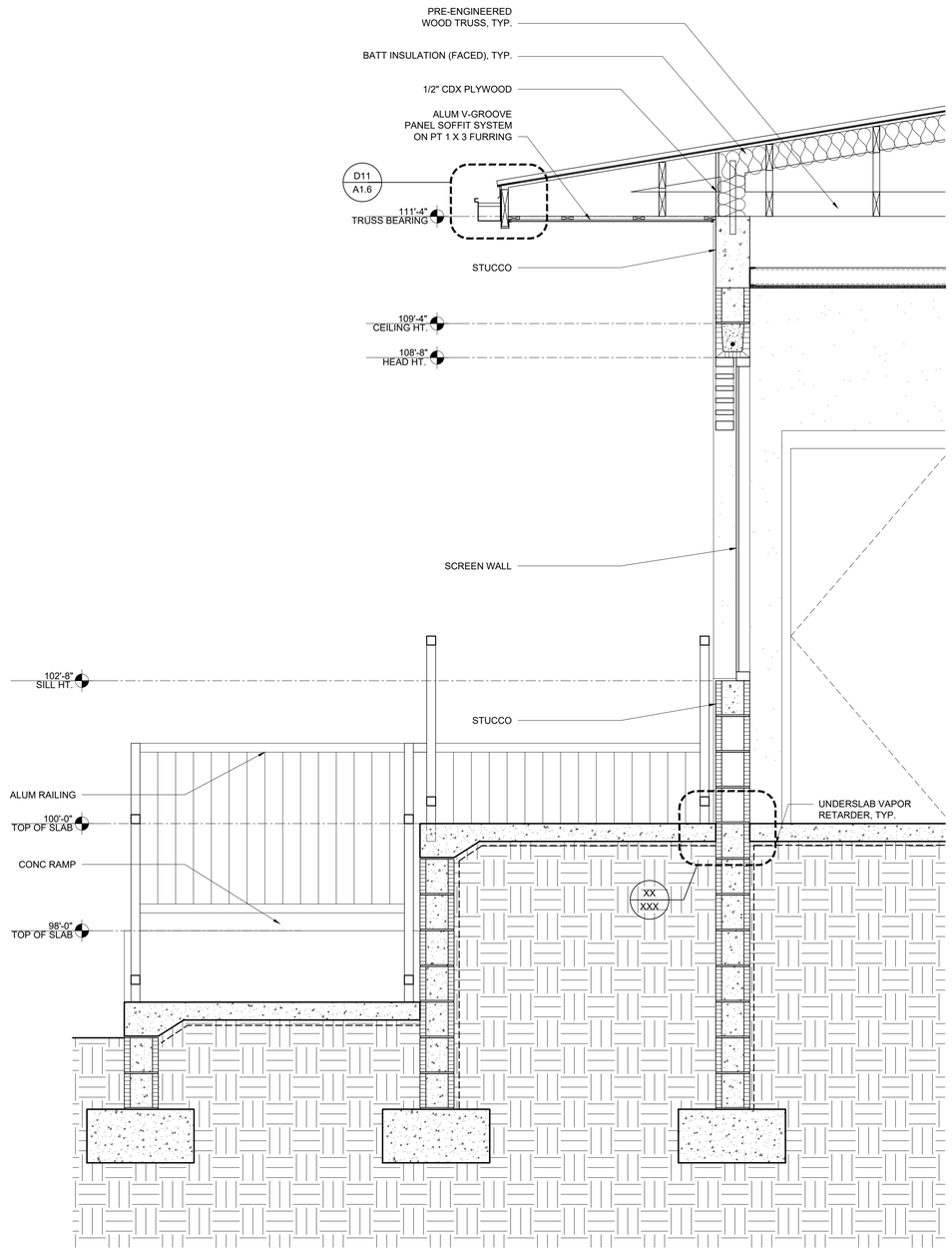

WALL SECTION
3/4" = 1'-0"
A6

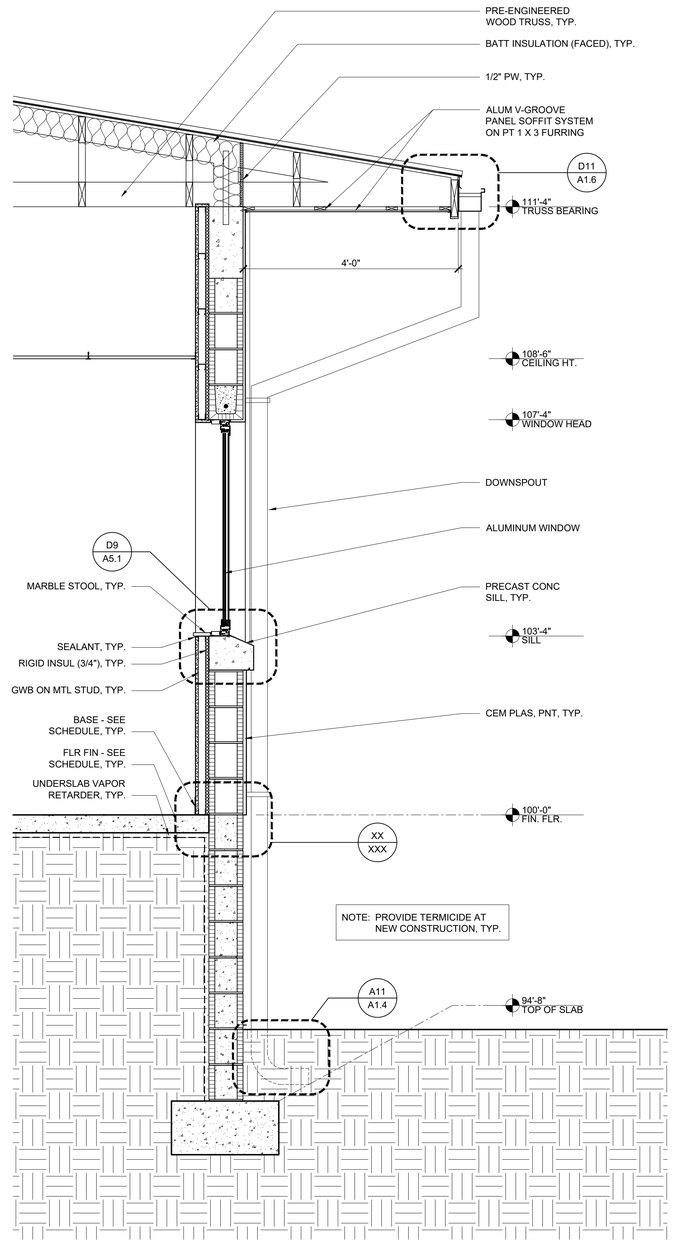

WALL SECTION
3/4" = 1'-0"
A1

1315 E. SEVENTH AVENUE
SUITE 106
TAMPA, FLORIDA 33605.3607

TELEPHONE 813.242.6677
FACSIMILE 813.242.6683

wilderarchitecture.com

AA26000655

WILDERARCHITECTURE, INC.

HILLSBOROUGH COUNTY BOARD
OF COUNTY COMMISSIONERS
COUNTY CENTER
601 E KENNEDY BLVD
TAMPA, FL 33601

HILLSBOROUGH COUNTY
NORTHWEST AREA HEAD START

PROJECT #: 2010-00

DISTRIBUTION	DATE
DESIGN DEVELOPMENT	06.11.2020
90% CONST DOCS	08.19.2020

WALL SECTIONS

A4.2

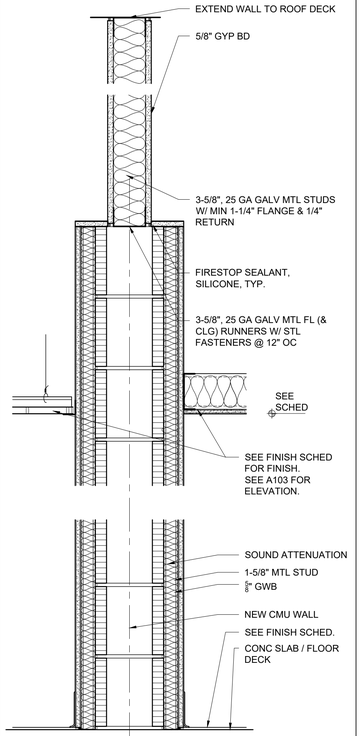

PARTITION TYPE P7 — 1 1/2" = 1'-0" — F13

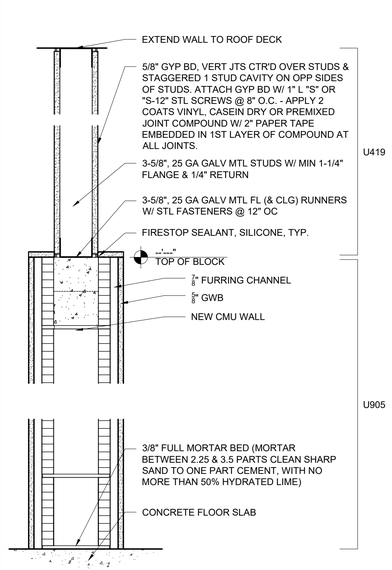

CONSTRUCTION SHALL CONFORM TO REQUIREMENTS OF UL SYSTEM #U419, 1 HOUR FIRE RATED AND UL SYSTEM #U905, 1 HOUR FIRE RATED.

NOTES:
1. HORIZONTAL GYP BD JOINTS OPPOSITE SIDES OF WALL ABOVE CEILING MUST BE STAGGERED BY MIN 1'-0".
2. WHERE WALL INTERSECTS WITH JOIST, BEAM, TRUSS, OR OTHER STRUCTURE AT TOP OF WALL, PROVIDE ADDITIONAL FRAMING AS REQ'D TO ENSURE GYP BD EXTENDS UNSUPPORTED NO GREATER THAN 6". INFILL AROUND STRUCTURE WITH FIRE SAFING, TYP.
3. WALL FINISH SUBSTRATES ARE NOT SHOWN FOR SAKE OF CLARITY AND MAY OR MAY NOT APPLY TO THIS DETAIL - REFER TO "INTERIOR WALL TYPE SCHEDULE" FOR FINISH SUBSTRATE MATERIALS, IF ANY, THAT MAY BE REQUIRED.

FIRE RATED PARTITION DETAIL P6 — 1 1/2" = 1'-0" — F10

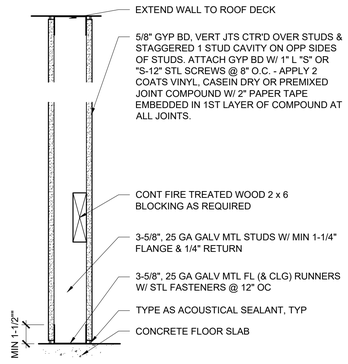

CONSTRUCTION SHALL CONFORM TO REQUIREMENTS OF UL SYSTEM #U419, 1 HOUR FIRE RATED

NOTES:
1. HORIZONTAL GYP BD JOINTS OPPOSITE SIDES OF WALL ABOVE CEILING MUST BE STAGGERED BY MIN 1'-0".
2. WHERE WALL INTERSECTS WITH JOIST, BEAM, TRUSS, OR OTHER STRUCTURE AT TOP OF WALL, PROVIDE ADDITIONAL FRAMING AS REQ'D TO ENSURE GYP BD EXTENDS UNSUPPORTED NO GREATER THAN 6". INFILL AROUND STRUCTURE WITH FIRE SAFING.

FIRE RATED PARTITION DETAIL — 1 1/2" = 1'-0" — F6

FIRE RATED WALL NOTES

1. HORIZONTAL JOINTS BETWEEN VERTICALLY ORIENTED GYPSUM BOARD SHEETS SHALL BE BACKED WITH HORIZONTAL STUDS SPANNING BETWEEN VERTICAL STUDS. MATCH VERTICAL WALL STUDS IN GAGE, SIZE, AND FASTENING.
2. NONMETALLIC ELECTRICAL OUTLET BOXES SHALL NOT BE INSTALLED ON OPPOSITE SIDES OF RATED WALLS UNLESS CLASSIFIED FOR FIRE RESISTANCE AS DEFINED BY UL SECTION "OUTLET BOXES AND FITTINGS CLASSIFIED FOR FIRE RESISTANCE."
3. METALLIC ELECTRICAL OUTLET BOXES SHALL NOT EXCEED 16 SQUARE INCHES WITHIN THE WALL FACE, NOR EXCEED 100 SQUARE INCHES AGGREGATE SURFACE AREA PER 100 SQUARE FEET OF WALL SURFACE. MAINTAIN MAXIMUM OF 1/8" CLEARANCE BETWEEN BOX AND GYPSUM BOARD. METALLIC BOXES ON OPPOSITE SIDES OF A WALL SHALL BE SEPARATED BY A MINIMUM OF 24" HORIZONTALLY, UNLESS WALL OPENING PROTECTIVE MATERIALS ARE INSTALLED PER REQUIREMENTS OF THEIR CLASSIFICATION, AS DEFINED BY UL SECTION "WALL OPENING PROTECTIVE MATERIALS." ELECTRICAL BOXES EXCEEDING 16 SQUARE INCHES IN FIRE RATED STUD WALLS SHALL BE FRAMED BY STUDS AND INSTALLED WITH A PUTTY PAD APPROVED FOR NECESSARY SIZE, INSTALLED PER MANUFACTURER INSTRUCTIONS.
4. ALL PENETRATIONS SHALL BE SEALED PER APPROPRIATE UL TESTED METHODS, AS DEFINED BY UL SECTION "THROUGH-PENETRATION FIRESTOP SYSTEMS." PENETRATIONS THROUGH CMU RATED WALLS SHALL BE COMPLETELY SURROUNDED BY NON-SHRINK GROUT, WITH NON-COMBUSTIBLE CMU CELL CLOSURE.
5. ALL NAILS SHALL MEET REQUIREMENTS OF ASTM F547 OR ASTM C514.
6. ALL SCREWS SHALL MEET REQUIREMENTS OF ASTM C1002 OR ASTM C954.
7. ALL EXPOSED FINISHES SHALL MEET A FLAME SPREAD INDEX OF LESS THAN 200 AND SMOKE DEVELOPMENT INDEX OF LESS THAN 450, BASED ON TEST METHOD ANSI/UL 723.
8. GAGES, SIZES, FASTENERS, AND OTHER QUANTITATIVE NOTES ARE MINIMUMS FOR FIRE RATING REQUIREMENT. IF CONFLICTING WITH OTHER SPECS AND/OR DRAWINGS, THE MORE STRINGENT NOTE/SPEC TAKES PRECEDENCE.
9. FIRE RATED WALLS MUST BE CONSTRUCTED TO ENSURE CONTINUITY OF REQUIRED FIRE RATING. MORE STRINGENT FIRE RATINGS REQUIRE CONTINUITY OVER LESS STRINGENT FIRE RATINGS. FOR EXAMPLE, ENVELOPE OF A FIRE RATED WALL MUST BE COMPLETE PRIOR TO ATTACHMENT OF INTERSECTING NON-RATED WALLS.

FIRE RATED PARTITION NOTES — J1

PARTITION SCHEDULE NOTES

A. THE FOLLOWING INTERIOR WALL FINISH SUBSTRATES ARE TO BE PROVIDED IN LIEU OF GYPSUM BOARD (IN LIKE THICKNESSES):
- MOISTURE RESISTANT GYPSUM BOARD ON FIXTURE SIDE OF ALL PLUMBING WALLS
- SILICONE IMPREGNATED TILE BACKER BOARD ON SIDE OF WALLS SCHEDULED TO RECEIVE CERAMIC TILE
- ABUSE RESISTANT GYPSUM BOARD WHERE INDICATED ON FLOOR PLAN

C. REFERENCES HEREIN TO FIRE RATINGS APPLY ONLY TO WALLS GRAPHICALLY DESIGNATED IN PLAN TO BE FIRE RATED IN ACCORDANCE WITH THE "WALL LEGEND."
D. WALL TYPE INDICATED SHALL CONTINUE OVER DOOR OPENINGS AND OVER/BELOW GLAZED OPENINGS OR WINDOWS AS REQ'D. COORDINATE WITH FRAME DETAILS.
E. WALL TYPES LISTED HEREIN WITH AN STC RATING ARE CONSIDERED TO BE "ACOUSTIC WALLS."
F. STC RATINGS INDICATED HEREIN ARE DERIVED FROM THE LABORATORY TEST INDICATED IN THE "DESIGN REFERENCE" COLUMN. TEST SOURCES ARE AS FOLLOWS:

USG, SA, BBN:	UNITED STATES GYPSUM
NGC:	NATIONAL GYPSUM COMPANY
KAL:	KODARS ACOUSTRICAL LABS
TL:	ETL-SEMKO

G. CONSTRUCT ACOUSTIC WALLS TO COMPLY WITH THE FOLLOWING REQUIREMENTS:
1. FILL ALL WALL PENETRATIONS W/ BATT INSULATION AND SEAL W/ ACOUSTICAL SEALANT.
2. STAGGER ELECTRICAL AND COMMUNICATIONS BOXES A MINIMUM OF 16" HORIZONTALLY.
3. APPLY ACOUSTIC SEALANT AT PERIMETER OF STUD WALLS, TYP.
4. GYPSUM BOARD FASTENERS MUST NOT CONTACT MASONRY ON CMU WALLS HAVING GYP BD ON FURRING STRIPS.

H. METAL STUD & GYPSUM BOARD WALLS WITH EQUIVALENT OR BETTER FIRE & STC RATINGS MAY BE SUBSTITUTED FOR CMU WALLS ABOVE THE CEILING LEVEL. THE INTEGRITY OF SOUND & FIRE RATINGS MUST BE MAINTAINED.
I. EXTEND RATED PARTITIONS TO THE UNDERSIDE OF THE ROOF SHEATHING AT HOUSING PORTION OF STATION.

PARTITION SCHEDULE NOTES — F1

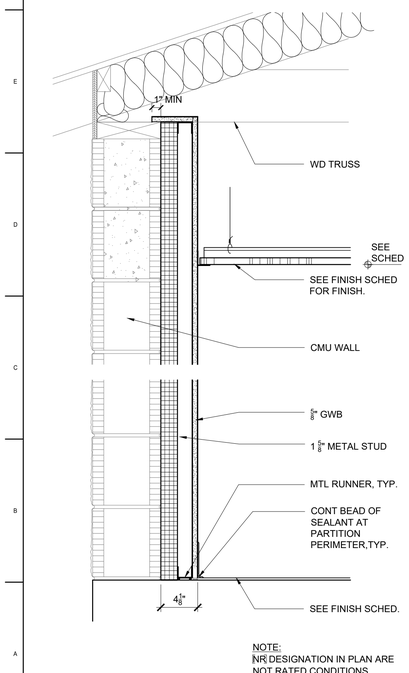

NOTE:
NR DESIGNATION IN PLAN ARE NOT RATED CONDITIONS

PARTITION TYPE P5 — 1 1/2" = 1'-0" — A13

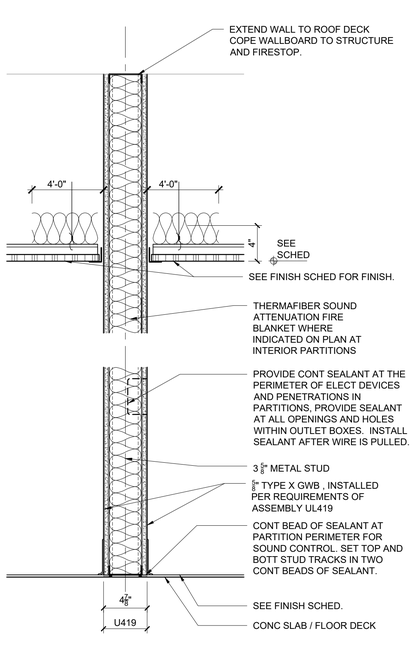

1 HR RATED UL (U419) PARTITION TYPE P4 — 1 1/2" = 1'-0" — A10

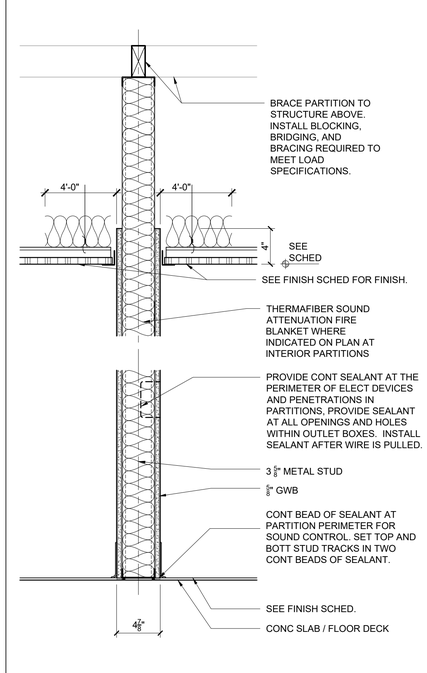

PARTITION TYPE P3 — 1 1/2" = 1'-0" — A7

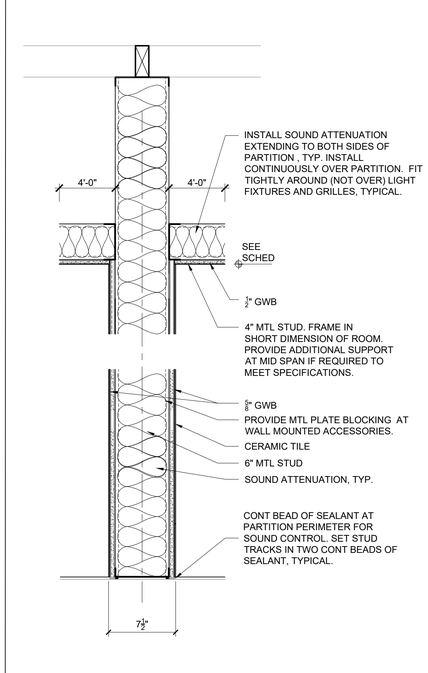

PARTITION TYPE P2 — 1 1/2" = 1'-0" — A4

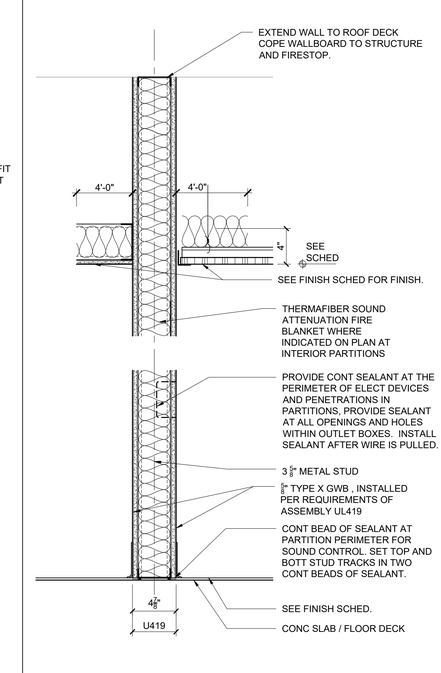

1 HR RATED UL (U419) PARTITION TYPE P1 — 1 1/2" = 1'-0" — A1

1315 E. SEVENTH AVENUE
SUITE 106
TAMPA, FLORIDA 33605.3607

TELEPHONE 813.242.6677
FACSIMILE 813.242.6683

wilderarchitecture.com

AA26000655

WILDERARCHITECTURE, INC.

HILLSBOROUGH COUNTY BOARD
OF COUNTY COMMISSIONERS
COUNTY CENTER
601 E KENNEDY BLVD
TAMPA, FL 33601

HILLSBOROUGH COUNTY
NORTHWEST AREA HEAD START

PROJECT #: 2010-00

DISTRIBUTION	DATE
90% CONST DOCS	08.19.2020

PARTITION TYPES

A4.3

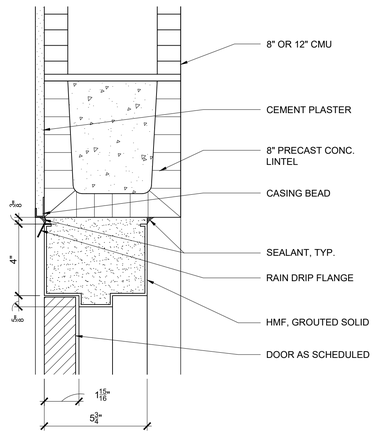

HEAD DETAIL 3" = 1'-0" H13

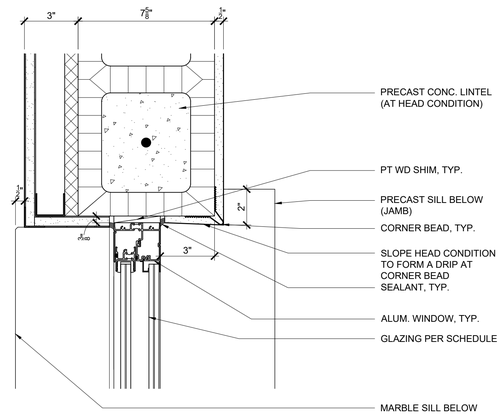

JAMB DETAIL 3" = 1'-0" H9

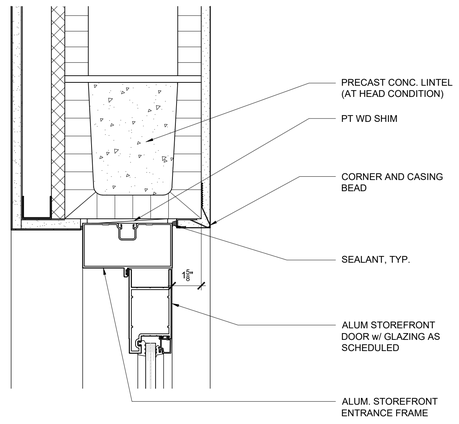

HEAD DETAIL 3" = 1'-0" H5

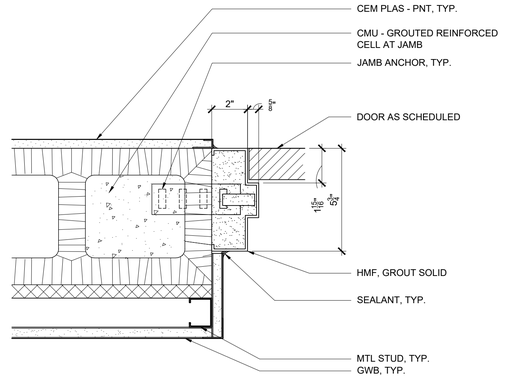

JAMB DETAIL 3" = 1'-0" H1

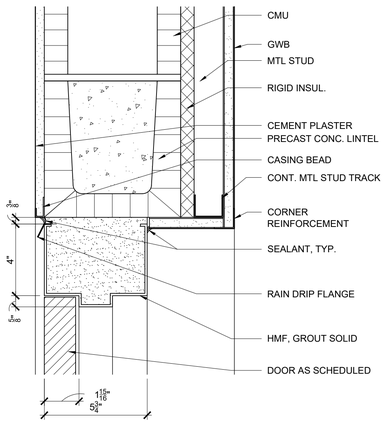

HEAD DETAIL 3" = 1'-0" D13

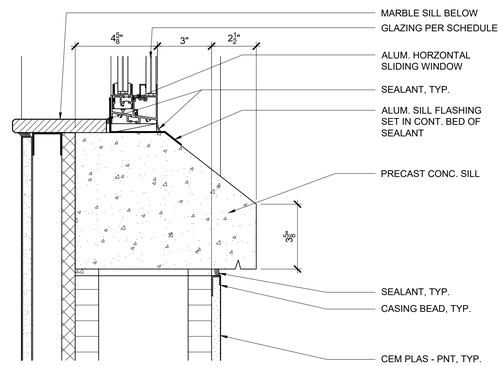

JAMB DETAIL 3" = 1'-0" D9

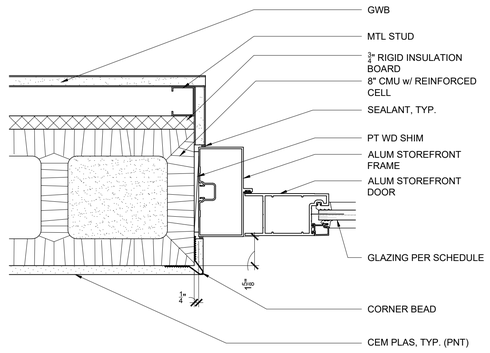

JAMB DETAIL 3" = 1'-0" D5

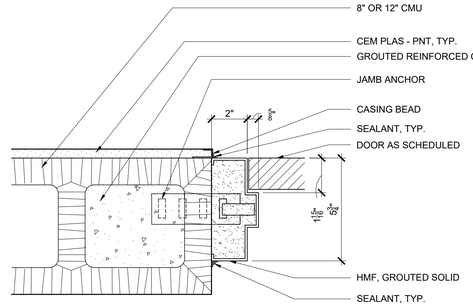

JAMB DETAIL 3" = 1'-0" D1

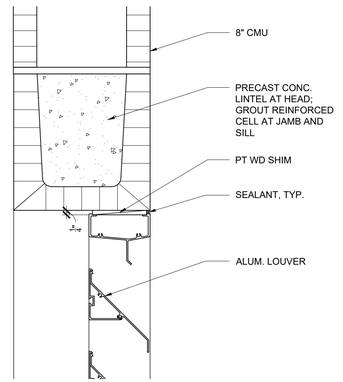

HEAD DETAIL 3" = 1'-0" A13

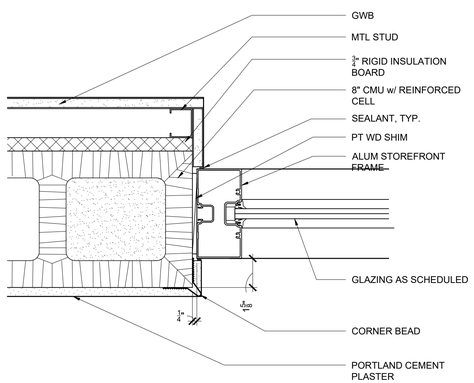

JAMB DETAIL 3" = 1'-0" A9

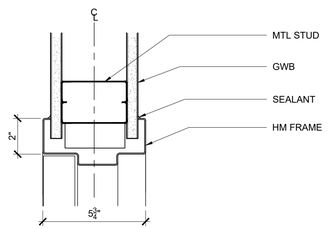

JAMB DETAIL 3" = 1'-0" A5

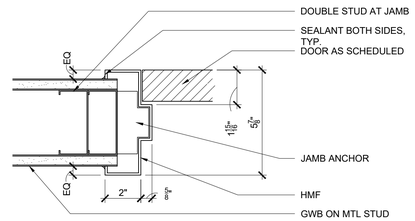

JAMB DETAIL 3" = 1'-0" A1

1315 E. SEVENTH AVENUE
SUITE 106
TAMPA, FLORIDA 33605.3607

TELEPHONE 813.242.6677
FACSIMILE 813.242.6683

wilderarchitecture.com

AA26000555

WILDERARCHITECTURE, INC.

HILLSBOROUGH COUNTY BOARD
OF COUNTY COMMISSIONERS
COUNTY CENTER
601 E KENNEDY BLVD
TAMPA, FL 33601

HILLSBOROUGH COUNTY
NORTHWEST AREA HEAD START

PROJECT #: 2010-00

DISTRIBUTION	DATE
90% CONST DOCS	08.19.2020

DETAILS

A5.1

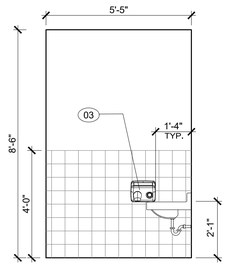

RESTROOM 112C - EAST INTERIOR ELEVATION J12
3/8" = 1'-0"

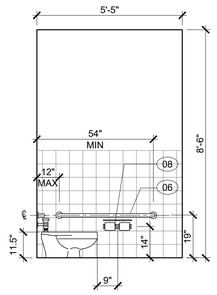

RESTROOM 112C - WEST INTERIOR ELEVATION J9
3/8" = 1'-0"

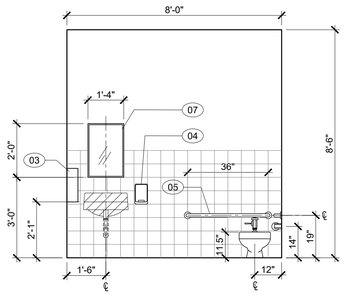

RESTROOM 112C - SOUTH INTERIOR ELEVATION J5
3/8" = 1'-0"

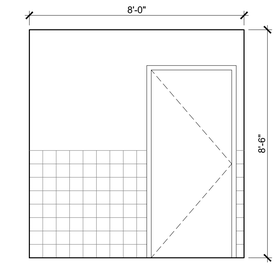

RESTROOM 112C - NORTH INTERIOR ELEVATION J1
3/8" = 1'-0"

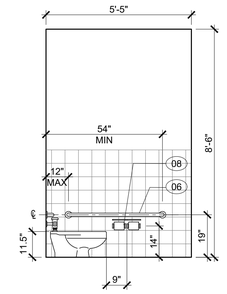

RESTROOM 109C - EAST INTERIOR ELEVATION F12
3/8" = 1'-0"

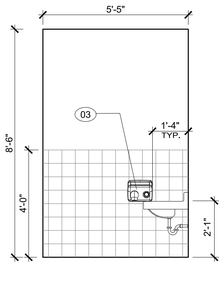

RESTROOM 109C - WEST INTERIOR ELEVATION F9
3/8" = 1'-0"

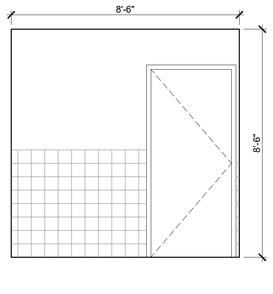

RESTROOM 109C - SOUTH INTERIOR ELEVATION F5
3/8" = 1'-0"

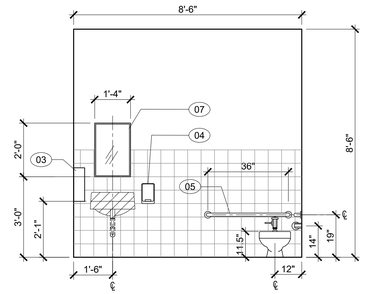

RESTROOM 109C - NORTH INTERIOR ELEVATION F1
3/8" = 1'-0"

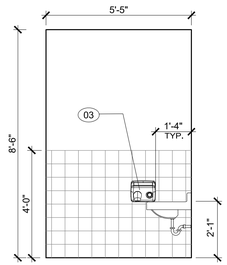

RESTROOM 113C - EAST INTERIOR ELEVATION C12
3/8" = 1'-0"

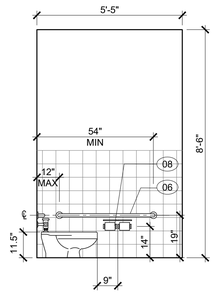

RESTROOM 113C - WEST INTERIOR ELEVATION C9
3/8" = 1'-0"

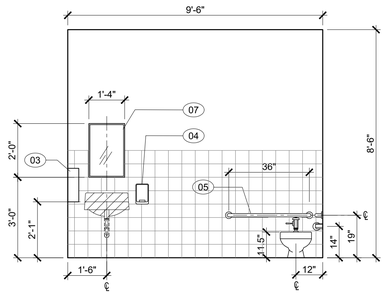

RESTROOM 113C - SOUTH INTERIOR ELEVATION C5
3/8" = 1'-0"

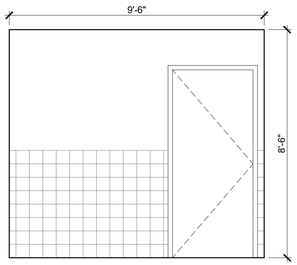

RESTROOM 113C - NORTH INTERIOR ELEVATION C1
3/8" = 1'-0"

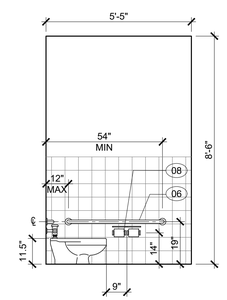

RESTROOM 110C - EAST INTERIOR ELEVATION A12
3/8" = 1'-0"

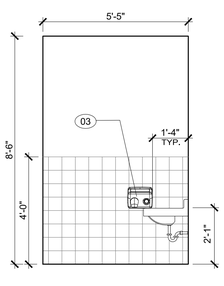

RESTROOM 110C - WEST INTERIOR ELEVATION A9
3/8" = 1'-0"

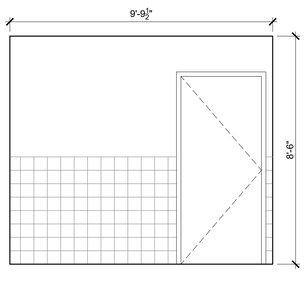

RESTROOM 110C - SOUTH INTERIOR ELEVATION A5
3/8" = 1'-0"

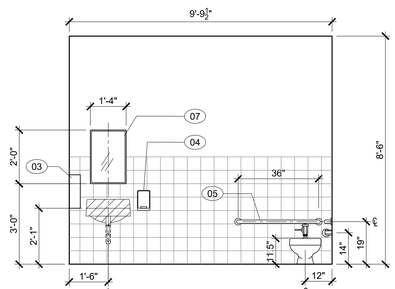

RESTROOM 110C - NORTH INTERIOR ELEVATION A1
3/8" = 1'-0"

1315 E. SEVENTH AVENUE
SUITE 106
TAMPA, FLORIDA 33605.3607

TELEPHONE 813.242.6677
FACSIMILE 813.242.6683

wilderarchitecture.com

AA26000655

WILDERARCHITECTURE, INC.

HILLSBOROUGH COUNTY BOARD
OF COUNTY COMMISSIONERS
COUNTY CENTER
601 E KENNEDY BLVD
TAMPA, FL 33601

HILLSBOROUGH COUNTY
NORTHWEST AREA HEAD START

PROJECT #: 2010-00	
DISTRIBUTION	DATE
90% CONST DOCS	08.19.2020

INTERIOR
ELEVATIONS

A6.1

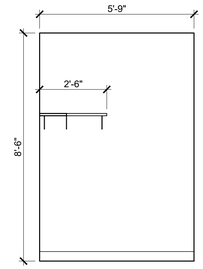

JANITOR'S CLOSET - SOUTH ELE. 3/8" = 1'-0" | J13

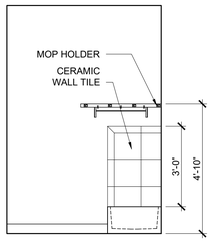

JANITOR'S CLOSET - NORTH ELE. 3/8" = 1'-0" | G13

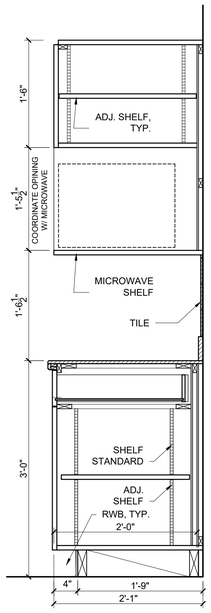

WALL CABINET - MICROWAVE 1" = 1'-0" | G11

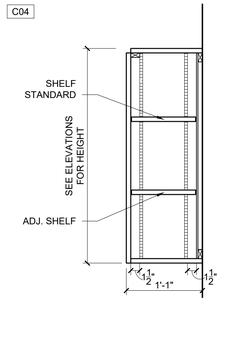

KITCHEN UPPER CABINET 1" = 1'-0" | G9

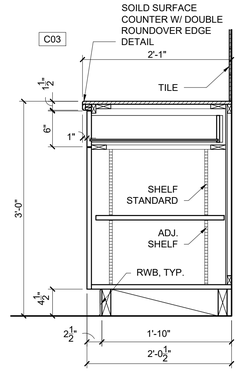

KITCHEN BASE CABINET 1" = 1'-0" | G7

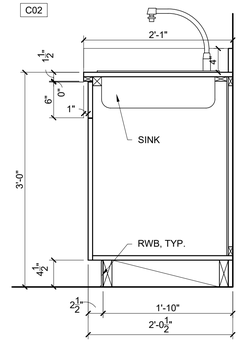

BASE CABINET & SINK 1" = 1'-0" | G5

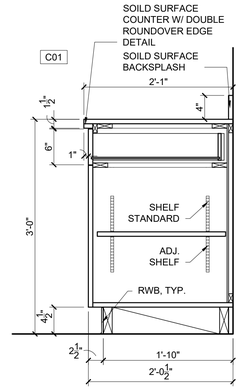

BASE CABINET 1" = 1'-0" | G3

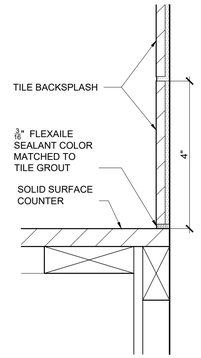

TILE JOINT - COUNTER 6" = 1'-0" | G1

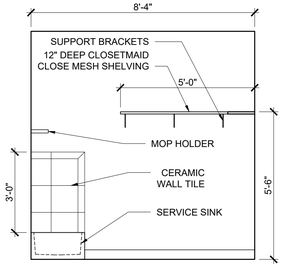

JANITOR'S CLOSET - EAST ELE. 3/8" = 1'-0" | C13

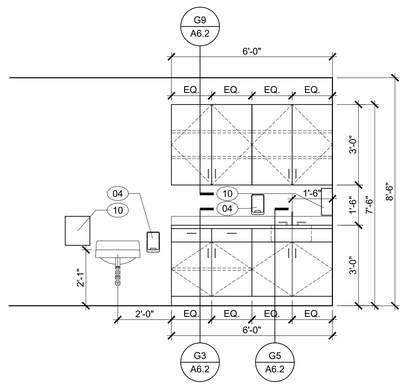

TYPICAL CLASSROOM CASEWORK ELEVATION 3/8" = 1'-0" | C9

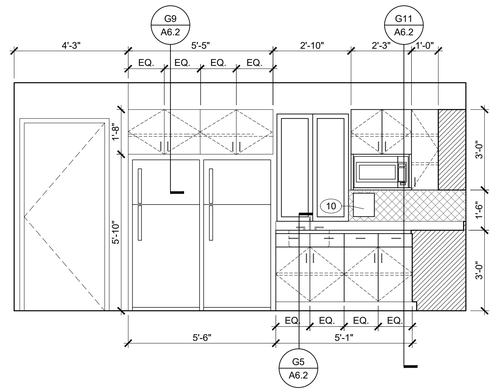

BREAKROOM - EAST INTERIOR ELEVATION 3/8" = 1'-0" | C5

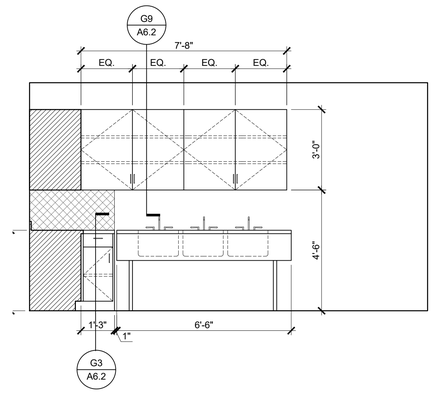

BREAKROOM - SOUTH INTERIOR ELEVATION 3/8" = 1'-0" | C1

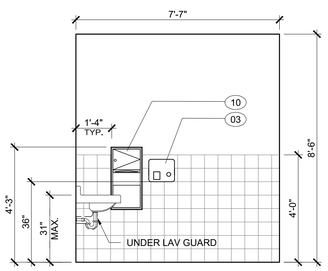

RESTROOM 107 - EAST INTERIOR ELEVATION 3/8" = 1'-0" | A13

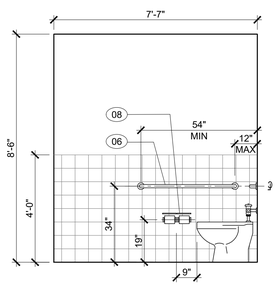

RESTROOM 107 - WEST INTERIOR ELEVATION 3/8" = 1'-0" | A9

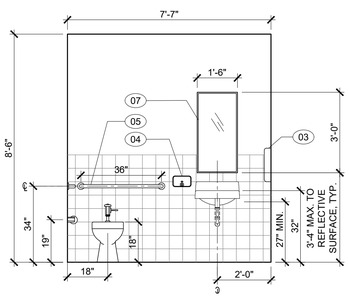

RESTROOM 107 - SOUTH INTERIOR ELEVATION 3/8" = 1'-0" | A5

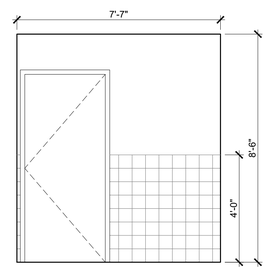

RESTROOM 107 - NORTH INTERIOR ELEVATION 3/8" = 1'-0" | A1

1315 E. SEVENTH AVENUE
SUITE 106
TAMPA, FLORIDA 33605.3607

TELEPHONE 813.242.6677
FACSIMILE 813.242.6683

wilderarchitecture.com

AA26000655

WILDERARCHITECTURE, INC.

HILLSBOROUGH COUNTY BOARD
OF COUNTY COMMISSIONERS
COUNTY CENTER
601 E KENNEDY BLVD
TAMPA, FL 33601

HILLSBOROUGH COUNTY
NORTHWEST AREA HEAD START

PROJECT #: 2010-00

DISTRIBUTION	DATE
90% CONST DOCS	08.19.2020

INTERIOR ELEVATIONS

A6.2

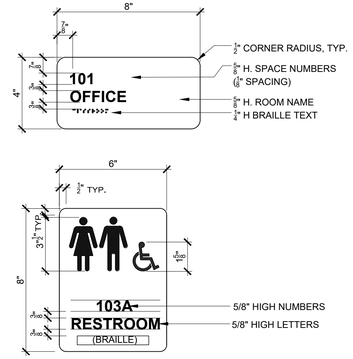

SIGN DETAIL
3" = 1'-0" J12

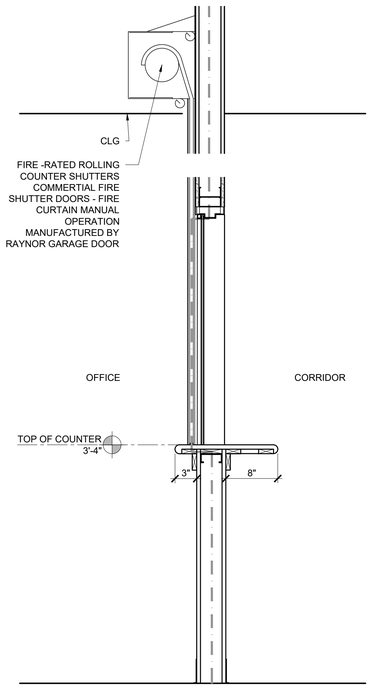

LOUVER TYPES
1/4" = 1'-0" C12

TAG	TYPE	REMARKS
G1	LAMINATED UV -TINTED	9/16" THICK, TYP. IMPACT GLAZING
G2	FIRE GLASS WITHOUT WIRE	1/4" THICK, TYP.
G3	TEMPERED CLEAR	1/4" THICK, TYP. TEMPERED

GLAZING SCHEDULE
NTS K8

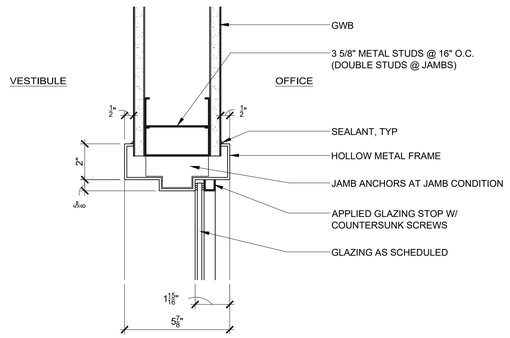

HEAD DETAIL
3" = 1'-0" F8

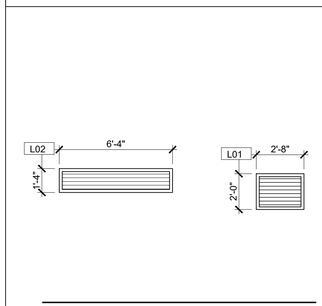

ALUM LOUVER
(IMPACT RATED)

LOUVERS TYPES
1/4" = 1'-0" C10

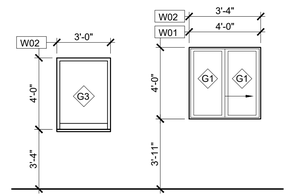

ALUM HORIZONTAL
SLIDING WINDOW
(IMPACT RATED)

WINDOW TYPES
1/4" = 1'-0" C8

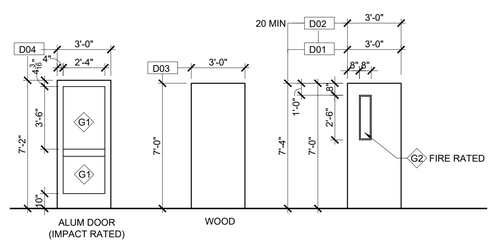

ALUM DOOR
(IMPACT RATED)

WOOD

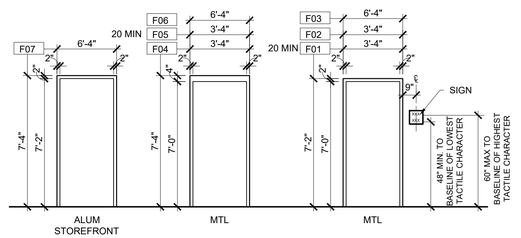

ALUM
STOREFRONT

MTL

MTL

FRAME TYPES
1/4" = 1'-0" A8

FINISH SCHEDULE

ROOM NUMBER	ROOM NAME	FLOOR	BASE	FINISH WALLS SOUTH	WALLS EAST	WALLS WEST	WALLS NORTH	CEILING HEIGHT	CEILING FINISH	REMARKS
101	VESTIBULE	LVT	VWB	PNT	PNT	PNT	PNT	8'-6"	APC	-
102	CORRIDOR	LVT	VWB	PNT	PNT	PNT	PNT	8'-6"	APC	-
103	CORRIDOR	LVT	VWB	PNT	PNT	PNT	PNT	8'-6"	APC	-
104	OFFICE	LVT	VWB	PNT	PNT	PNT	PNT	8'-6"	APC	-
105	OFFICE	LVT	VWB	PNT	PNT	PNT	PNT	8'-6"	APC	-
106	CONFERENCE	LVT	VWB	PNT	PNT	PNT	PNT	8'-6"	APC	-
107	RESTROOM	PT	PT	EP/CT	EP/CT	EP/CT	EP/CT	8'-6"	EP	1
108	BREAKROOM	LVT	VWB	PNT	PNT	PNT	PNT	8'-6"	APC	-
108A	STORAGE	LVT	VWB	PNT	PNT	PNT	PNT	8'-6"	PNT	-
109	CLASSROOM	LVT	VWB	PNT	PNT	PNT	PNT	8'-6"	APC	-
109B	STORAGE	LVT	VWB	PNT	PNT	PNT	PNT	8'-6"	PNT	-
109C	RESTROOM	PT	PT	EP/CT	EP/CT	EP/CT	EP/CT	8'-6"	EP	1
110	CLASSROOM	LVT	VWB	PNT	PNT	PNT	PNT	8'-6"	APC	-
110B	STORAGE	LVT	VWB	PNT	PNT	PNT	PNT	8'-6"	PNT	-
110C	RESTROOM	P1	PT	EP/CT	EP/CT	EP/CT	EP/CT	8'-6"	EP	1
111	DATA	VNC	VWB	PNT	PNT	PNT	PNT	8'-6"	APC	2
112	CLASSROOM	VCT	VWB	PNT	PNT	PNT	PNT	8'-6"	APC	-
112B	STORAGE	VCT	VWB	PNT	PNT	PNT	PNT	8'-6"	PNT	-
112C	RESTROOM	PT	PT	EP/CT	EP/CT	EP/CT	EP/CT	8'-6"	EP	1
113	CLASSROOM	LVT	VWB	PNT	PNT	PNT	PNT	8'-6"	APC	-
113B	STORAGE	LVT	VWB	PNT	PNT	PNT	PNT	8'-6"	PNT	-
113C	RESTROOM	PT	PT	EP/CT	EP/CT	EP/CT	EP/CT	8'-6"	EP	1
114	MECHANICAL	SC	VWB	PNT	PNT	PNT	PNT	8'-6"	PNT	-
115	JANITOR	LVT	VWB	PNT	PNT	PNT	PNT	8'-6"	PNT	-
116	ELECTRICAL	SC	VWB	PNT	PNT	PNT	PNT	8'-6"	PNT	-
117	SCREENED PORCH	SC	VWB	PNT	PNT	PNT	PNT	8'-6"	PNT	-
118	MECHANICAL YARD	CONC	--	PNT	PNT	PNT	PNT	--	--	-

FINISH SCHEDULE ABBREVIATIONS

APC	ACOUSTICAL PANEL CEILING	PT	PORCELAIN TILE
CONC	CONCRETE	SC	SEALED CONCRETE
CT	CERAMIC TILE	LVT	LUXURY VINYL TILE
EP	EPOXY PAINT	VCT	VINYL COMPOSITION TILE
NR	NONE REQUIRED	VNC	VINYL NON-CONDUCTIVE TILE
PNT	PAINT	VWB	VINYL WALL BASE

REMARKS

1. EXTEND WATERPROOFING UNDER CERAMIC/PORCELAIN TILE UP BEHIND BASE.
2. PLYWOOD BACKBOARD - PNT ALL SIDES / EDGES WITH FIRE RETARDANT PNT (ALL WALLS).

GENERAL REMARKS

1. PROVIDE SOUND ATTENUATION BLANKETS IN WALL BETWEEN ADJACENT ROOMS DESIGNATED.
2. SEE BUILDING SECTIONS FOR CEILING HEIGHT(S)

FINISH SCHEDULE
NTS F1

DOOR SCHEDULE

OPENING NUMBER	ROOM NAME	DOOR TYPE	DOOR MATL	DOOR INT	DOOR EXT	FRAME TYPE	FRAME MATL	FRAME DETAILS HEAD	FRAME DETAILS JAMB	FRAME DETAILS SILL	FIRE RATING	HDW SET	SIGNAGE F.I.S.H. #	SIGNAGE TEXT (SIGN TYPE "A")	REMARKS
101	VESTIBULE	D04	ALUM		•	F07	ALUM	H5/A5.1	D5/A5.1	--	--	01	101	--	1,3,6
103	CORRIDOR	D01	MTL		•	F04	MTL	D13/A5.1	H13/A5.1	--	--	04	103	--	3
104	OFFICE	D01	WD	•		F01	MTL	A5/A5.1	A1/A5.1	--	20 MIN	10	104	--	4
105	OFFICE	D01	WD	•		F01	MTL	A5/A5.1	A1/A5.1	--	20 MIN	10	105	--	4
106	CONFERENCE	D01	WD	•		F01	MTL	A5/A5.1	A1/A5.1	--	20 MIN	10	106	--	4
107	RESTROOM	D03	WD	•		F01	MTL	A5/A5.1	A1/A5.1	--	20 MIN	12	107	--	4
108	BREAKROOM	D01	WD	•		F01	MTL	A5/A5.1	A1/A5.1	--	20 MIN	08	108	--	4
108A	STORAGE	D03	WD	•		F02	MTL	A5/A5.1	A1/A5.1	--	--	11	108A	--	--
108B	BREAKROOM	D03	WD	•		F02	MTL	A5/A5.1	A1/A5.1	--	--	11	108	--	--
109	CLASSROOM	D01	WD	•		F01	MTL	A5/A5.1	A1/A5.1	--	20 MIN	07	109	--	3,4
109A	CLASSROOM	D01	WD	•		F01	MTL	A5/A5.1	A1/A5.1	--	20 MIN	07	109	--	3,4
109B	STORAGE	D03	WD	•		F03	MTL	A5/A5.1	A1/A5.1	--	--	06	109B	--	--
109C	RESTROOM	D03	WD	•		F02	MTL	A5/A5.1	A1/A5.1	--	--	13	109C	--	--
110	CLASSROOM	D01	WD	•		F01	MTL	A5/A5.1	A1/A5.1	--	20 MIN	07	110	--	3,4
110A	CLASSROOM	D01	WD	•		F01	MTL	A5/A5.1	A1/A5.1	--	20 MIN	07	110	--	3,4
110B	STORAGE	D03	WD	•		F03	MTL	A5/A5.1	A1/A5.1	--	--	06	110B	--	--
110C	RESTROOM	D03	WD	•		F02	MTL	A5/A5.1	A1/A5.1	--	--	13	110C	--	--
111	DATA	D03	WD	•		F01	MTL	A5/A5.1	A1/A5.1	--	20 MIN	08	111	--	3,4
112	CLASSROOM	D01	WD	•		F01	MTL	A5/A5.1	A1/A5.1	--	20 MIN	07	112	--	3,4
112A	CLASSROOM	D01	WD	•		F01	MTL	A5/A5.1	A1/A5.1	--	20 MIN	07	112	--	3,4
112B	STORAGE	D03	WD	•		F03	MTL	A5/A5.1	A1/A5.1	--	--	06	112B	--	--
112C	RESTROOM	D03	WD	•		F02	MTL	A5/A5.1	A1/A5.1	--	--	13	112C	--	--
113	CLASSROOM	D01	WD	•		F01	MTL	A5/A5.1	A1/A5.1	--	20 MIN	07	113	--	3,4
113A	CLASSROOM	D01	MTL		•	F04	MTL	D13/A5.1	H13/A5.1	--	20 MIN	05	113	--	3,4
113B	STORAGE	D03	WD	•		F03	MTL	A5/A5.1	A1/A5.1	--	--	06	113B	--	--
113C	RESTROOM	D03	WD	•		F02	MTL	A5/A5.1	A1/A5.1	--	--	13	113C	--	--
114	MECH	D03	MTL		•	F06	MTL	H13/A5.1	D1/A5.1	--	--	03	114	--	1
115	JANITOR	D03	WD	•		F05	MTL	H13/A5.1	D1/A5.1	--	--	09	115	--	4
116	ELEC	D03	MTL		•	F06	MTL	H13/A5.1	D1/A5.1	--	--	03	116	--	1
117	PORCH	D01	MTL		•	F06	MTL	H13/A5.1	D1/A5.1	--	--	02	117	--	3, 5
118	MECH YARD	D03	MTL		•	F06	MTL	H13/A5.1	D1/A5.1	--	--	03	118	--	1

FINISH SCHEDULE ABBREVIATIONS

MTL	METAL
WD	WOOD
ALUM	ALUMINUM

REMARKS

1. PAIR OF DOORS.
2. ELECTRIC STRIKE.
3. CARD READER.
4. PROVIDE HARDWARE (CLOSER AND LATCHING HARDWARE) FOR RATED ASSEMBLY.
5. PAIR OF DOORS WITH ONE INACTIVE LEAF.
6. INTERCOM AND AIPHONE SYSTEM- BUZZ

GENERAL REMARKS

1. ALL EXTERIOR DOORS, WINDOWS AND LOUVERS TO BE IMPACT PROTECTED.
2. ALL EXTERIOR DOORS SHALL BE INSULATED.

DOOR SCHEDULE
NTS A1

1315 E. SEVENTH AVENUE
SUITE 106
TAMPA, FLORIDA 33605.3607

TELEPHONE 813.242.6677
FACSIMILE 813.242.6683

wilderarchitecture.com

AA26000655

WILDERARCHITECTURE, INC.

HILLSBOROUGH COUNTY BOARD
OF COUNTY COMMISSIONERS
COUNTY CENTER
601 E KENNEDY BLVD
TAMPA, FL 33601

HILLSBOROUGH COUNTY
NORTHWEST AREA HEAD START

PROJECT #: 2010-00

DISTRIBUTION	DATE
DESIGN DEVELOPMENT	06.11.2020
90% CONST DOCS	08.19.2020

SCHEDULES

A7.1

MEDICAL PROFESSIONAL CENTER
CONDOMINIUMS AT TOWN & COUNTRY
HOSPITAL REVISED
CONDOMINIUM PLAT BOOK 22, PAGE 113
FOLIO No. 008060-5632

NORTH LINE OF THE SOUTHWEST 1/4 OF THE SOUTHEAST 1/4
SUBDIVISION LINE

S89° 10' 22"E 512.62' (F)

4' HOG WIRE FENCE

THE WEST 1/2 OF THE WEST 1/2 OF THE SW 1/4 OF THE SE 1/4 OF SECTION 35, TOWNSHIP 28 SOUTH, RANGE 17 EAST

WEST 228' OF THE EAST 1/2 OF THE WEST 1/2 OF THE SW 1/4 OF THE SE 1/4

THE WEST LINE OF THE SOUTHWEST 1/4 OF THE SOUTHEAST 1/4

LESS THE WEST 52'

WEBB ROAD (R/W VARIES)

R/W LINE

CONCRETE SIDEWALK

0.4'

0.1'

0.6'

0.9'

PROPERTY LINE

NOTE: MONUMENT IS LEANING NORTH.

5' UTILITY EASEMENT

LOT 11
FOLIO No. 007043-0000

LOT 12
FOLIO No. 007044-0000

LOT 13
FOLIO No. 007045-0000

LOT 14
FOLIO No. 007046-0000

LOT 15
FOLIO No. 007047-0000

TOWN 'N COUNTRY PARK UNIT NO. 7
PLAT BOOK 87, PAGE 36
BLOCK 1

FOLIO No. 006748-0000

FOLIO No. 006746-0000

203
N: 1333052.42
E: 470788.52
EL: 7.55
SCIR

202
N: 1333023.82
E: 470608.64
EL: 7.04
SCIR

205
N: 1332985.44
E: 471085.38
EL: 7.30
SCIR

N00° 27' 08"W 399.65' (F)

N00° 17' 16"E 400.15' (F)

N89° 09' 07"W 511.48' (F)

THE NORTH 400' (DEED)

SUBDIVISION LINE

4' CHAIN LINK FENCE

6' WOOD FENCE

10' DRAINAGE RIGHT-OF-WAY FOR DITCH PURPOSES EXCLUSIVELY PER PLAT

CONCRETE BASKETBALL COURT

CONCRETE BLOCK BUILDING FINISHED FLOOR ELEV.=8.4

GAZEBO OVER CONCRETE FINISHED FLOOR ELEV.=7.3

8" CONCRETE WALL

4' CHAIN LINK FENCE SURROUNDING ELECTRICAL EQUIPMENT

LIFT STATION

MOUND

IRRIGATION

ENTRANCE SIGN

CONCRETE HANDICAPPED PARKING

INV 18" CMP ELEV=5.58

INV 18" CMP ELEV=5.69

INV 12" CMP ELEV=6.40

INV 12" CMP ELEV=6.22

OHU

ASPHALT

CONCRETE

GRAVEL

DITCH

TRIPLE

TWIN

QUADRUPLE

32" TRIPLE

40" TWIN

16" (DEAD)

128.8'

128.3'

73.3'

99.4'

60.6'

20.0'

40.0'

50.0'

101.0'

120.0'

22.5'

1.0'

0.5'

3.6'

6.2'

0.2'

0.3'

1.0'

1.3'

1.3'

CENTER OF 12" CMP

R/W LINE

PROPERTY LINE

FLORIDA

TAMPA

GRID NORTH

0 30 60 Feet

SCALE: 1"=30'

SHELDON ROAD
WEBB ROAD
SITE
HANLEY ROAD
HILLSBOROUGH AVENUE
SR 580
HILLSBOROUGH AVENUE
SR 589
VETERANS EXPY

VICINITY MAP
SECTION 35, TOWNSHIP 28 SOUTH, RANGE 17 EAST
HILLSBOROUGH COUNTY, FLORIDA
NO SCALE

MONUMENTATION:

- BENCHMARK / CONTROL POINT
- CAPPED IRON ROD FOUND (LB 7340)
- CAPPED IRON ROD SET (LB 5122)
- CONCRETE MONUMENT (UNMARKED)
- IRON PIPE FOUND

ABBREVIATIONS:

CMP = CORRUGATED METAL PIPE
(F) = FIELD MEASUREMENT
OHU = OVERHEAD UTILITIES
R/W = RIGHT-OF-WAY
SCIR = SET CAPPED IRON ROD

LEGEND:

- BASKETBALL HOOP
- BOLLARD
- CABLE PEDESTAL
- CONCRETE POLE WITH ELECTRIC SERVICE BOX
- FIRE HYDRANT
- GUY ANCHOR
- MITERED END SECTION
- SANITARY SEWER CLEANOUT
- SANITARY SEWER MANHOLE
- SIGN (GENERAL PURPOSE)
- SIGN (UNDERGROUND GAS MARKER)
- SPOT ELEVATION
- WATER METER
- WOOD LIGHT POLE
- WOOD UTILITY POLE

TREES (WITH SIZES NOTED):

- ELM
- OAK
- PALM
- PINE

LEGAL DESCRIPTION:

THE NORTH 400 FEET OF THE W ½ OF THE W ½ OF THE SW ¼ OF THE SE ¼ OF SECTION 35, TOWNSHIP 28 SOUTH, RANGE 17 EAST, LESS THE WEST 52 FEET THEREOF AND THE NORTH 400 FEET OF THE WEST 228 FEET OF THE E ½ OF THE W ½ OF THE SW ¼ OF THE SE¼ OF SECTION 35, TOWNSHIP 28 SOUTH, RANGE 17 EAST.

NOTES:

1. *NO UNDERGROUND INSTALLATIONS OR IMPROVEMENTS HAVE BEEN LOCATED, EXCEPT AS NOTED.*
2. *NO INSTRUMENTS OF RECORD REFLECTING EASEMENTS, RIGHTS OF WAY, AND/OR OWNERSHIP WERE FURNISHED TO THIS SURVEYOR, EXCEPT AS SHOWN.*
3. *UNLESS OTHERWISE SHOWN HEREON, NO JURISDICTIONAL WETLAND AREAS OR OTHER TOPOGRAPHIC FEATURES HAVE BEEN LOCATED.*
4. *THIS OFFICE DID NOT PERFORM A TITLE SEARCH OF THE PUBLIC RECORDS TO VERIFY OR CONFIRM OWNERSHIP NOR WAS ONE PROVIDED BY THE CLIENT.*
5. *THE COORDINATES, BEARINGS AND DISTANCES SHOWN HEREON ARE BASED ON GRID COORDINATES OF THE FLORIDA WEST ZONE TRANSVERSE MERCATOR STATE PLANE COORDINATE SYSTEM NAD83 (2011 ADJUSTMENT).*
6. *ELEVATIONS SHOWN HEREON ARE EXPRESSED IN US SURVEY FEET AND ARE BASED ON HILLSBOROUGH COUNTY BENCHMARK "VA-294," WITH A PUBLISHED ELEVATION OF 6.48, NAVD 88.*
7. *THIS IS A BOUNDARY AND TOPOGRAPHIC SURVEY WITH TREE LOCATION.*
8. *THE LAST DAY OF FIELD WORK WAS MAY 25, 2019.*

BY	AUTH.
REVISIONS	
DATE	

NSI Northwest Surveying Inc.
Certificate of Authorization Number LB0005122
8409 Sunstate Street, Tampa, Florida 33634
813-889-9236 Fax 813-886-3315

NOT VALID WITHOUT THE SIGNATURE AND THE ORIGINAL RAISED SEAL OF A FLORIDA LICENSED SURVEYOR AND MAPPER.

GERALD SILVA, PLS
FLORIDA CERTIFICATE NO. 5218

BOUNDARY AND TOPOGRAPHIC SURVEY
TNC SERVICE CENTER AT CHURCH PARK
HILLSBOROUGH COUNTY, FLORIDA

CIP# C77814000
WO# 219207120

JOB NO.: 1902-014
CLIENT: BES
DRAWN: WJH
CHECKED: GS
FILE NAME: CHURCH PARK BND – TOPO
SCALE: 1" = 30'
DATE: 04/26/2019

SHEET 1 OF 1

HILLSBOROUGH COUNTY
NORTHWEST AREA HEADSTART

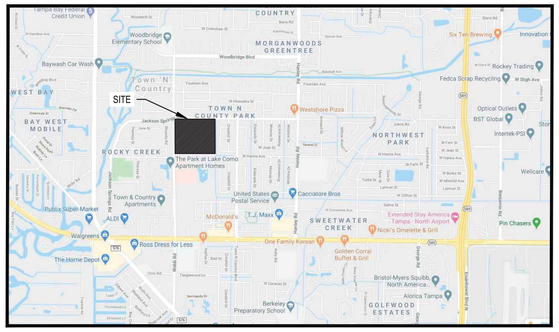

LOCATION MAP
NTS

Utility Owner	Contact	Phone Number	Utility Type
HILLSBOROUGH COUNTY WATER RESOURCE SERVICES	LISA JACKSON	PHONE: 813-272-5977 EXT:43607	WATER
CROWN CASTLE NG	STAKE CENTER LOCATING DISPATCHER	DAY: 801-364-1063	FIBER
CHARTER COMMUNICATIONS	USIC DISPATCH OFFICE	PHONE: 800-778-9140	CATV
CITY OF TAMPA WATER	RORY JONES, P.E.	PHONE: 813-231-5291	WATER
FRONTIER COMMUNICATIONS	USIC DISPATCH	PHONE: 800-778-9140	CATV, COMMUNICATION LINES
TAMPA ELECTRIC COMPANY	PAULETTE COOPER	PHONE: 813-275-3059	ELECTRIC

CONSTRUCTION PLANS

SECTION 09, TOWNSHIP 32 SOUTH, RANGE 20 EAST
FOLIO #: 006748-0000
5631 WEBB ROAD
TAMPA, FL 33615

SHEET INDEX

C-1 - COVER SHEET
C-2 - GENERAL NOTES & DETAILS
C-3 - EXISTING CONDITIONS, DEMO & EROSION CONTROL PLAN
C-4 - SITE PLAN
C-5 - PAVING, GRADING & DRAINAGE PLAN
C-5.1 - CROSS SECTIONS
C-6 - PAVING, GRADING & DRAINAGE DETAILS
C-7 - UTILITY PLAN
C-8 - UTILITY DETAILS
C-9 - UTILITY DETAILS

PREPARED FOR:
WILDER ARCHITECTS, INC.
1315 EAST SEVENTH AVE, SUITE 106
TAMPA, FL 33605
(813) 242-6677
AA 26000655

DISTRIBUTIONS:
1. _____
2. _____
3. _____
4. _____
5. _____

SUBMITTALS:
1. _____
2. _____
3. _____
4. _____
5. _____
6. _____
7. _____
8. _____
9. _____

PREPARED BY:

CAMPO ENGINEERING, INC.
1725 East 5th Avenue, Tampa, FL 33605
Phone (813) 215-7372 and Fax (813) 902-8782
www.campoengineering.com
info@campoengineering.com
FBPR REGISTRY NO.: 26726

LAUREN DECKER CAMPO LICENSE No. 57421 STATE OF FLORIDA PROFESSIONAL ENGINEER

THIS ITEM HAS BEEN ELECTRONICALLY SIGNED AND SEALED BY LAUREN D. CAMPO, PE ON 09/16/2020 USING A SHA AUTHENTICATION CODE. PRINTED COPIES OF THIS DOCUMENT ARE NOT CONSIDERED SIGNED AND SEALED AND THE SHA AUTHENTICATION CODE MUST BE VERIFIED ON ANY ELECTRONIC COPIES.

LAUREN D. CAMPO, P.E. NO. 57421

September 16, 2020
DATE (SEAL)

G:\Projects\19-026 - HC Church Park Improvements\Drawings\Design & Construction\19-026 - Cover.dwg - Printed Sep 16, 2020-1:24pm by: GageS

SAFETY

1. DURING THE CONSTRUCTION AND MAINTENANCE OF THIS PROJECT, ALL SAFETY REGULATIONS ARE TO BE ENFORCED. THE CONTRACTOR OR HIS REPRESENTATIVE SHALL BE RESPONSIBLE FOR THE CONTROL AND SAFETY OF THE TRAVELING PUBLIC AND THE SAFETY OF HIS PERSONNEL.
2. THE CONTRACTOR'S MAINTENANCE OF TRAFFIC PLAN MUST BE SUBMITTED AND APPROVED BY THE GOVERNMENTAL AGENCIES HAVING JURISDICTION PRIOR TO BEGINNING ANY CONSTRUCTION ACTIVITIES.
3. LABOR SAFETY REGULATIONS SHALL CONFORM TO THE PROVISIONS SET FORTH BY OSHA IN THE FEDERAL REGISTER OF THE DEPARTMENT OF TRANSPORTATION.
4. CONTRACTOR SHALL PROVIDE AND MAINTAIN ITS OWN SAFETY EQUIPMENT IN ACCORDANCE WITH ITS HEALTH & SAFETY PROGRAM AND ALL OTHER APPLICABLE LEGAL AND HEALTH AND SAFETY REQUIREMENTS. THE CONTRACTOR IS ALSO RESPONSIBLE FOR PROVIDING ITS EMPLOYEES AND SUBCONTRACTORS WITH ADEQUATE INFORMATION AND TRAINING TO ENSURE THAT ALL EMPLOYEES AND SUBCONTRACTORS AND SUBCONTRACTORS' EMPLOYEES COMPLY WITH ALL APPLICABLE REQUIREMENTS. CONTRACTOR SHALL REMAIN IN COMPLIANCE WITH ALL OCCUPATION SAFETY AND HEALTH REGULATIONS AS WELL AS THE ENVIRONMENTAL PROTECTION LAWS. THE FOLLOWING IS NOT TO BE PERCEIVED AS THE ENTIRE SAFETY PROGRAM BUT JUST BASIC REQUIREMENTS.
5. ALL EXCAVATIONS BY THE CONTRACTOR SHALL CONFORM TO THE REQUIREMENTS OF THE DEPARTMENT OF LABOR'S OCCUPATIONAL SAFETY AND HEALTH ADMINISTRATION RULES AND REGULATIONS. PARTICULAR ATTENTION MUST BE PAID TO THE CONSTRUCTION STANDARDS FOR EXCAVATIONS, 29 CFR PART 1926, SUBPART P.
6. THE MINIMUM STANDARDS AS SET FORTH IN THE CURRENT EDITION OF "THE STATE OF FLORIDA, MANUAL ON TRAFFIC CONTROL AND SAFE PRACTICES FOR STREET AND HIGHWAY CONSTRUCTION, MAINTENANCE AND UTILITY OPERATIONS" SHALL BE FOLLOWED IN THE DESIGN APPLICATION, INSTALLATION, MAINTENANCE AND REMOVAL OF ALL TRAFFIC CONTROL DEVICES, WARNING DEVICES AND BARRIERS NECESSARY TO PROTECT THE PUBLIC AND WORKMEN FROM HAZARDS WITHIN THE PROJECT LIMITS.
7. ALL TRAFFIC CONTROL MARKINGS AND DEVICES SHALL CONFORM TO THE PROVISIONS SET FORTH IN THE MANUAL ON UNIFORM TRAFFIC CONTROL DEVICES PREPARED BY THE U.S. DEPARTMENT OF TRANSPORTATION FEDERAL HIGHWAY ADMINISTRATION.
8. IT SHALL BE THE SOLE RESPONSIBILITY OF THE CONTRACTOR TO COMPLY AND ENFORCE ALL APPLICABLE SAFETY REGULATIONS. THE ABOVE INFORMATION HAS BEEN PROVIDED FOR THE CONTRACTOR'S INFORMATION ONLY AND DOES NOT IMPLY THAT THE OWNER OR ENGINEER WILL INSPECT AND/OR ENFORCE SAFETY REGULATIONS.
9. THE CONTRACTOR SHALL EXERCISE EXTREME CAUTION IN AREAS OF BURIED UTILITIES AND SHALL PROVIDE AT LEAST 48 HOURS NOTICE TO THE UTILITY COMPANIES PRIOR TO CONSTRUCTION TO OBTAIN FIELD LOCATIONS OF EXISTING UNDERGROUND UTILITIES. CALL SUNSHINE ONE CALL AT 811 TO ARRANGE FOR FIELD LOCATIONS.
10. THE CONTRACTOR IS RESPONSIBLE FOR REPAIRING ANY DAMAGE TO EXISTING FACILITIES, ABOVE OR BELOW GROUND, THAT MAY OCCUR AS A RESULT OF THE WORK PERFORMED BY THE CONTRACTOR CALLED FOR IN THIS CONTRACT.
11. THE CONTRACTOR SHALL BE RESPONSIBLE FOR PROTECTING EXCAVATIONS AGAINST COLLAPSE AND WILL PROVIDE BRACING, SHEETING OR SHORING AS NECESSARY. DEWATERING METHODS SHALL BE USED AS REQUIRED TO KEEP TRENCHES DRY WHILE PIPE AND APPURTENANCES ARE BEING PLACED.

EXISTING TREE PROTECTION NOTES:

1. REQUIRED BARRICADES AND FLAGGING SHALL BE ERECTED BY THE CONTRACTOR AND APPROVED BY THE ENGINEER AND REGULATORY AGENCIES PRIOR TO COMMENCEMENT OF LAND ALTERATION ACTIVITIES. BARRICADES SHALL REMAIN IN PLACE UNTIL ALTERATION AND CONSTRUCTION ACTIVITIES ARE COMPLETED.
2. DURING LAND ALTERATION AND CONSTRUCTION ACTIVITIES, WITHIN THE DRIPLINE OF A TREE REMAINING ON SITE, UNLESS OTHERWISE APPROVED, IT SHALL BE UNLAWFUL TO REMOVE VEGETATION, EXCEPT BY HAND, BY GRUBBING OR TO PLACE SOIL DEPOSITS, DEBRIS, SOLVENTS, CONSTRUCTION MATERIAL, MACHINERY OR OTHER EQUIPMENT OF ANY KIND WITHIN THE DRIPLINE OF A TREE TO REMAIN ON THE SITE.
3. ADEQUATE PROTECTION MEASURES (I.E. HAY BALES, BAFFLES, SODDING AND SANDBAGGING) SHALL BE PROVIDED, AS NECESSARY, TO MINIMIZE EROSION AND DOWNSTREAM SEDIMENTATION CAUSED BY SURFACE WATER RUNOFF ON EXPOSED LAND SURFACES.
4. ALL TRIMMING UNDERTAKEN ON A TREE PROTECTED BY THE PROVISIONS OF THE LAND DEVELOPMENT CODE SHALL BE PRUNED IN ACCORDANCE WITH THE AMERICAN NATIONAL STANDARDS INSTITUTE (ANSI) A–300 PRUNING STANDARDS. THIS INFORMATION MUST BE CLEARLY IDENTIFIED ON THE CONSTRUCTION PLANS.

CLEARING/DEMOLITION

1. PRIOR TO ANY SITE CLEARING, ALL TREES SHOWN TO REMAIN AS INDICATED IN THE CONSTRUCTION PLANS SHALL BE PROTECTED IN ACCORDANCE WITH LOCAL TREE ORDINANCES AND DETAILS CONTAINED IN THESE PLANS. IT SHALL BE THE CONTRACTOR'S RESPONSIBILITY TO MAINTAIN THESE TREES IN GOOD CONDITION. NO TREE SHOWN TO REMAIN SHALL BE REMOVED WITHOUT WRITTEN APPROVAL FROM THE REGULATORY AGENCY OR THE OWNER.
2. THE CONTRACTOR SHALL CLEAR AND GRUB ONLY THOSE PORTIONS OF THE SITE NECESSARY FOR CONSTRUCTION. DISTURBED AREAS WILL BE SEEDED, MULCHED, SODDED OR PLANTED WITH OTHER APPROVED LANDSCAPE MATERIAL IMMEDIATELY FOLLOWING CONSTRUCTION.
3. REMAINING EARTHWORK THAT RESULTS FROM CLEARING AND GRUBBING OR SITE EXCAVATION IS TO BE UTILIZED ON–SITE IF REQUIRED, PROVIDED THAT THE MATERIAL IS DEEMED SUITABLE FOR CONSTRUCTION BY THE OWNER'S SOILS TESTING COMPANY. EXCESS MATERIAL IS TO BE EITHER STOCKPILED ON THE SITE AS DIRECTED BY THE OWNER OR OWNER'S ENGINEER, OR REMOVED FROM THE SITE. THE CONTRACTOR IS RESPONSIBLE FOR ACQUIRING ANY PERMITS THAT ARE NECESSARY FOR REMOVING EXCESS EARTHWORK FROM THE SITE.
4. ALL CONSTRUCTION DEBRIS AND OTHER WASTE MATERIALS SHALL BE DISPOSED OF OFF–SITE IN ACCORDANCE WITH APPLICABLE REGULATORY AGENCY REQUIREMENTS.
5. CONTRACTOR WILL BE RESPONSIBLE FOR MAKING A VISUAL INSPECTION OF THE SITE AND WILL BE RESPONSIBLE FOR THE DEMOLITION AND REMOVAL, PURSUANT TO ALL FEDERAL, STATE, COUNTY, CITY OR OTHER GOVERNMENT AGENCY REQUIREMENTS, OF ALL UNDERGROUND AND ABOVE GROUND STRUCTURES THAT WILL NOT BE INCORPORATED WITHIN THE NEW FACILITIES.

SITE PLAN AND COORDINATE GEOMETRY

1. BOUNDARY SURVEY PREPARED BY LICENSED SURVEYOR.
2. ALL POINTS AND MONUMENTS SHALL BE SURVEYED UPON MOBILIZATION TO VERIFY THEIR ACCURACY. ANY DISCREPANCIES DISCOVERED MUST BE BROUGHT TO THE ATTENTION OF THE ENGINEER IN WRITING.
3. MONUMENTS AND OTHER SURVEY CONTROL POINTS SHALL BE PROTECTED FROM DAMAGE AND DISTURBANCE. IF ANY CONTROL POINTS ARE DAMAGED OR DISTURBED, IT SHALL BE THE RESPONSIBILITY OF THE CONTRACTOR TO NOTIFY THE ENGINEER AND REPLACE THE CONTROL POINTS TO THEIR ORIGINAL CONDITION AT HIS OWN EXPENSE.
4. LOCATIONS, ELEVATIONS, AND DIMENSIONS OF EXISTING UTILITIES, STRUCTURES AND OTHER FEATURES ARE SHOWN ACCORDING TO THE BEST INFORMATION AVAILABLE AT THE TIME OF PREPARATION OF THESE PLANS. THE CONTRACTOR SHALL VERIFY THE LOCATIONS, ELEVATIONS AND DIMENSIONS OF ALL EXISTING UTILITIES, STRUCTURES AND OTHER FEATURES AFFECTING THIS WORK PRIOR TO CONSTRUCTION.
5. UPON COMPLETION OF CONSTRUCTION, THE CONTRACTOR SHALL FURNISH THE OWNER'S ENGINEER WITH COMPLETE "AS–BUILT" INFORMATION CERTIFIED BY A REGISTERED LAND SURVEYOR. THIS "AS–BUILT" INFORMATION SHALL INCLUDE INVERT ELEVATIONS, LOCATION OF FITTINGS, LOCATION OF STRUCTURES FOR ALL UTILITIES INSTALLED, AS WELL AS TOP OF BANK, TOE OF SLOPE AND GRADE BREAK LOCATIONS AND ELEVATIONS FOR POND AND DITCH CONSTRUCTION. NO ENGINEER'S CERTIFICATIONS FOR CERTIFICATE OF OCCUPANCY PURPOSES WILL BE MADE UNTIL THIS INFORMATION IS RECEIVED AND APPROVED BY THE OWNER'S ENGINEER.

DRAINAGE

1. ALL STORM SEWER PIPE SHALL BE REINFORCED CONCRETE CLASS III (ASTM C–76) UNLESS OTHERWISE NOTED ON PLANS. ALL DRAINAGE STRUCTURES SHALL BE IN ACCORDANCE WITH FDOT ROADWAY AND TRAFFIC DESIGN STANDARDS AND LOCAL AGENCY STANDARDS UNLESS OTHERWISE SHOWN ON PLANS.
2. PIPE LENGTHS SHOWN ARE APPROXIMATE.
3. ALL DRAINAGE STRUCTURE GRATES AND COVERS SHALL BE TRAFFIC RATED FOR H–20 LOADINGS.
4. ALL STORM DRAINAGE PIPING SHALL BE SUBJECT TO A VISUAL INSPECTION BY THE OWNER'S ENGINEER PRIOR TO THE PLACEMENT OF BACKFILL. CONTRACTOR TO NOTIFY THE ENGINEER 48 HOURS IN ADVANCE TO SCHEDULE INSPECTION.
5. THE CONTRACTOR SHALL MAINTAIN AND PROTECT FROM MUD, DIRT, DEBRIS, ETC. THE STORM DRAINAGE SYSTEM UNTIL FINAL ACCEPTANCE OF THE PROJECT. THE CONTRACTOR MAY BE REQUIRED TO RECLEAN PIPES AND INLETS FOR THESE PURPOSES.

GENERAL NOTES

1. THE CONTRACTOR SHALL BECOME FAMILIAR WITH THE PERMIT AND INSPECTION REQUIREMENTS SPECIFIED BY THE VARIOUS GOVERNMENTAL AGENCIES. THE CONTRACTOR SHALL BE RESPONSIBLE FOR OBTAINING ALL CONSTRUCTION RELATED PERMITS, INCLUDING BUT NOT LIMITED TO: RIGHT OF WAY USE PERMITS, PIPING PERMITS, MOT PERMITS, ETC, PRIOR TO CONSTRUCTION, AND SCHEDULE ANY NECESSARY INSPECTIONS ACCORDING TO AGENCY INSTRUCTIONS.
2. ALL SPECIFICATIONS AND DOCUMENTS REFERRED TO IN THESE PLANS SHALL BE OF THE LATEST REVISION.
3. ALL WORK PERFORMED SHALL COMPLY WITH THE REGULATIONS AND ORDINANCES OF THE VARIOUS GOVERNMENTAL AGENCIES HAVING JURISDICTION OVER THE WORK.
4. CONTRACTOR SHALL SUBMIT SHOP DRAWINGS ON ALL PRECAST AND MANUFACTURED ITEMS TO THE ENGINEER OF RECORD FOR APPROVAL. FAILURE TO OBTAIN APPROVAL BEFORE INSTALLATION MAY RESULT IN REMOVAL AND REPLACEMENT AT CONTRACTOR'S EXPENSE.
5. WORK PERFORMED UNDER THIS CONTRACT SHALL INTERFACE SMOOTHLY WITH OTHER WORK BEING PERFORMED ON SITE BY OTHER CONTRACTORS AND UTILITY COMPANIES. IT WILL BE NECESSARY FOR THE CONTRACTOR TO COORDINATE AND SCHEDULE HIS ACTIVITIES, WHERE NECESSARY, WITH OTHER CONTRACTORS AND UTILITY COMPANIES & THEIR SUBCONTRACTORS.
6. THE WATER, SANITARY SEWER, AND STORM DRAINAGE FACILITIES ARE SUBJECT TO THE REVIEW AND APPROVAL OF THE REGULATORY AGENCY AND IT SHALL BE THE RESPONSIBILITY OF THE CONTRACTOR TO OBTAIN THE REQUIRED PERMITS TO PERFORM WORK IN THE PUBLIC RIGHT–OF–WAY.
7. CONTRACTOR SHALL LOCATE ALL EXISTING UTILITIES BEFORE ORDERING MATERIALS AND CASTING STRUCTURES.
8. IT WILL BE NECESSARY TO EXAMINE, COORDINATE AND ADJUST ACCORDINGLY THE PROPOSED LOCATIONS OF THE VARIOUS COMPONENTS OF THE SITE UTILITIES. THE LAYOUTS INDICATED IN THE PLANS ARE NOT EXACT AND IT SHALL BE THE RESPONSIBILITY OF THE CONTRACTOR TO SUBMIT COORDINATION DRAWINGS SHOWING PIPE SIZES, STRUCTURES, AND ELEVATIONS. THE CONTRACTOR SHALL BE RESPONSIBLE FOR THE SCHEDULING AND COORDINATION OF ALL THE UNDERGROUND WORK ASSOCIATED WITH THIS PROJECT.
9. CONTRACTOR SHALL CONFIRM LOCATIONS AND DEPTHS OF EXISTING WATER AND SEWER LINES PRIOR TO BEGINNING CONSTRUCTION.
10. THE EXISTING UNDERGROUND UTILITY LINES SHOWN HEREON WERE TAKEN FROM DOCUMENTS FURNISHED BY OTHERS AND NOT FIELD VERIFIED, THEREFORE, THE ENGINEER CANNOT GUARANTEE THE ACCURACY OF SAME NOR ALL THAT ARE SHOWN. THE CONTRACTOR SHALL EXPOSE ALL UNDERGROUND UTILITY LINES IN COORDINATION WITH THE OWNERS TO HIS SATISFACTION AND MAKE ADJUSTMENTS TO SAME IN THE EVENT THERE ARE CONFLICTS WITH NEW CONSTRUCTION.
11. BEFORE BEGINNING SITE WORK, THE CONTRACTOR IS REQUIRED TO CONFIRM IN THE FIELD EXISTENCE AND LOCATION OF UNDERGROUND UTILITIES AND OTHER FEATURES. THE CONTRACTOR MAY CONSULT THE UTILITY OWNER'S RECORD DRAWINGS, BUT THE UTILITY OWNER AND THE ENGINEER DO NOT GUARANTEE, BY IMPLICATION OR OTHERWISE, THE ACCURACY OF THESE DRAWINGS. THE SITE CONTRACTOR SHALL BE PRIMARILY RESPONSIBLE FOR ANY MODIFICATION REQUIRED, OTHER THAN SHOWN ON PLANS.
12. EXISTING WATER & SEWER MAIN LOCATIONS SHOWN ARE APPROXIMATE BASED ON HILLSBOROUGH COUNTY.
13. ALL MECHANICAL EQUIPMENT SHALL BE SCREENED FROM VIEW.
14. ADJUSTMENTS OF INLETS, JUNCTION BOXES, MANHOLE TOPS, WATER VALVES, WATER METERS, ETC. SHALL BE INCLUDED IN THE CONTRACTOR'S BID AND NO CLAIM SHALL BE MADE AGAINST THE OWNER OR ENGINEER FOR THESE ADJUSTMENTS, IF REQUIRED.
15. OVERALL CLEANUP SHALL BE ACCOMPLISHED BY THE CONTRACTOR IN ACCORDANCE WITH REGULATORY AGENCY STANDARDS OR AS DIRECTED BY THE ENGINEER. ANY AND ALL EXPENSES INCURRED FOR THIS WORK SHALL BE INCLUDED IN THE UNIT PRICE BID FOR OTHER ITEMS.
16. THE CONTRACTOR SHALL ENDEAVOR TO PROTECT PRIVATE PROPERTY. ANY DAMAGE CAUSED BY THE CONTRACTOR IN THE PERFORMANCE OF HIS WORK SHALL BE CORRECTED TO THE SATISFACTION OF THE ENGINEER AT THE CONTRACTOR'S EXPENSE. PAYMENT SHALL NOT BE MADE FOR THIS WORK.
17. ANY DAMAGE TO STATE, COUNTY, OR LOCAL ROADS CAUSED BY THE CONTRACTOR'S HAULING OR EXCAVATION EQUIPMENT SHALL BE REPAIRED BY THE CONTRACTOR TO THE SATISFACTION OF THE ENGINEER. PAYMENT SHALL NOT BE MADE FOR THIS WORK.
18. ANY U.S.C. & G.S. MONUMENT WITHIN LIMITS OF CONSTRUCTION IS TO BE PROTECTED. IF IN DANGER OF DAMAGE, THE CONTRACTOR SHOULD NOTIFY THE ENGINEER OF RECORD.

PAVING AND GRADING

1. ALL DELETERIOUS SUBSURFACE MATERIAL (I.E. MUCK, PEAT, BURIED DEBRIS) IS TO BE EXCAVATED IN ACCORDANCE WITH THESE PLANS OR AS DIRECTED BY THE OWNER, THE OWNER'S ENGINEER, OR OWNER'S SOIL TESTING COMPANY. DELETERIOUS MATERIAL IS TO BE STOCKPILED OR REMOVED FROM THE SITE AS DIRECTED BY THE OWNER. EXCAVATED AREAS TO BE BACK FILLED WITH APPROVED MATERIALS AND COMPACTED AS SHOWN ON THESE PLANS. CONTRACTOR IS RESPONSIBLE FOR ACQUIRING ANY PERMITS THAT ARE NECESSARY FOR REMOVING DELETERIOUS MATERIAL FROM THE SITE.
2. ALL NECESSARY FILL AND EMBANKMENT THAT IS PLACED DURING CONSTRUCTION SHALL CONSIST OF MATERIAL SPECIFIED BY THE OWNER'S SOIL TESTING COMPANY OR ENGINEER AND BE PLACED AND COMPACTED ACCORDING TO THESE PLANS OR THE REFERENCED SOILS REPORT.
3. PROPOSED SPOT ELEVATIONS REPRESENT FINISHED PAVEMENT OR GROUND SURFACE GRADE UNLESS OTHERWISE NOTED ON DRAWINGS.
4. CONTRACTOR SHALL TRIM, TACK AND MATCH EXISTING PAVEMENT AT LOCATIONS WHERE NEW PAVEMENT MEETS EXISTING PAVEMENT.
5. CURBING WILL BE PLACED AT THE EDGE OF ALL PAVEMENT, AS SHOWN ON THE PLANS.
6. REFER TO THE LATEST EDITION OF F.D.O.T. "ROADWAY AND TRAFFIC DESIGN STANDARDS" FOR DETAILS AND SPECIFICATIONS OF ALL F.D.O.T. TYPE CURBING AND GUTTERS CALLED FOR IN THESE PLANS.
7. CONTRACTOR TO PROVIDE A 1/2" TO 1" BITUMINOUS EXPANSION JOINT MATERIAL WITH SEALER AT ABUTMENT OF CONCRETE AND OTHER MATERIALS (BUILDINGS, OTHER POURED CONCRETE, ETC.)
8. ALL PAVEMENT MARKINGS IN RIGHT–OF–WAY AND STOP BARS SHALL BE MADE WITH PERMANENT THERMOPLASTIC AND SHALL CONFORM TO F.D.O.T STANDARD INDEX NO. 17346, SHEETS 1–7. PARKING STALL STRIPING AND ON–SITE PRIVATE PAVEMENT MARKINGS TO BE TRAFFIC GRADE PAINT.
9. THE CONTRACTOR WILL STABILIZE BY SEED AND MULCH, SOD OR OTHER APPROVED MATERIALS ANY DISTURBED AREAS WITHIN ONE WEEK FOLLOWING CONSTRUCTION OF THE UTILITY SYSTEMS AND PAVEMENT AREAS. CONTRACTOR SHALL MAINTAIN SUCH AREAS UNTIL FINAL ACCEPTANCE BY OWNER.
10. THE CONTRACTOR IS RESPONSIBLE FOR COORDINATING APPLICABLE TESTING WITH THE SOILS ENGINEER. TESTS WILL BE REQUIRED PURSUANT WITH THE TESTING SCHEDULE LOCATED ON THIS SHEET. UPON COMPLETION OF THE WORK, SOILS ENGINEER WILL SUBMIT CERTIFICATIONS TO THE OWNER'S ENGINEER STATING THAT ALL REQUIREMENTS HAVE BEEN MET.
11. A QUALIFIED TESTING LABORATORY SHALL PERFORM ALL TESTING NECESSARY TO ASSURE COMPLIANCE OF THE IN PLACE MATERIALS AS REQUIRED BY THESE PLANS AND THE VARIOUS AGENCIES. SHOULD ANY RETESTING BE REQUIRED DUE TO THE FAILURE OF ANY TESTS TO MEET THE REQUIREMENTS, THE CONTRACTOR WILL BEAR ALL COST OF SAID RETESTING.
12. ALL UNDERGROUND UTILITIES MUST BE IN PLACE AND TESTED OR INSPECTED PRIOR TO BASE AND PAVEMENT CONSTRUCTION.
13. CONTRACTOR IS TO PROVIDE EROSION CONTROL AND SEDIMENTATION BARRIER (SILTATION CURTAIN) TO PREVENT SILTATION OF ADJACENT PROPERTY, STREETS, STORM SEWERS AND WATERWAYS. IN ADDITION, THE CONTRACTOR SHALL PLACE STRAW, MULCH OR OTHER SUITABLE MATERIAL ON GROUND IN AREAS WHERE CONSTRUCTION RELATED TRAFFIC IS TO ENTER AND EXIT SITE. IF, IN THE OPINION OF THE ENGINEER AND/OR LOCAL AUTHORITIES, EXCESSIVE QUANTITIES OF EARTH ARE TRANSPORTED OFF–SITE EITHER BY NATURAL DRAINAGE OR BY VEHICULAR TRAFFIC. THE CONTRACTOR IS TO REMOVE SAID EARTH TO THE SATISFACTION OF THE ENGINEER AND/OR AUTHORITIES.
14. IF WIND EROSION BECOMES SIGNIFICANT DURING CONSTRUCTION, THE CONTRACTOR SHALL STABILIZE THE AFFECTED AREA USING SPRINKLING, IRRIGATION OR OTHER ACCEPTABLE METHODS.

WATER DISTRIBUTION

1. SEE PIPE SEPARATION REQUIREMENTS, THIS SHEET.
2. ALL WATER MAINS SHALL HAVE A MINIMUM OF 36 INCHES OF COVER.
3. ALL WATER SYSTEM WORK SHALL CONFORM WITH LOCAL REGULATORY AGENCY STANDARDS AND SPECIFICATIONS.
4. CONFLICTS BETWEEN WATER AND STORM OR SANITARY SEWER TO BE RESOLVED BY ADJUSTING THE WATER LINES AS NECESSARY AND PER PIPE SEPARATION REQUIREMENTS NOTED THIS SHEET.
5. ALL ON SITE PVC WATER MAINS 4 INCHES THROUGH 12 INCHES SHALL BE IN ACCORDANCE WITH AWWA C–900 AND SHALL BE CLASS 150 SDR 18. ALL ON–SITE PVC WATER MAINS 2" TO 3" SHALL BE CLASS 1120 AND MEET REQUIREMENTS OF SDR 21 IN ACCORDANCE WITH ASTM D–2241. WATER MAINS SMALLER THAN 1 1/2" SHALL BE CLASS 1120 OR 1220 SCHEDULE 80 AND MEET REQUIREMENTS OF ASTM D–1785.
6. ALL DUCTILE IRON PIPE SHALL CONFORM TO THE REQUIREMENTS OF ANSI STANDARD A21.51, MINIMUM CLASS 50. JOINTS FOR DUCTILE IRON PIPE SHALL BE MECHANICAL OR PUSH–ON JOINTS. PIPE SHALL HAVE AN EXTERIOR BITUMINOUS COATING IN ACCORDANCE WITH ANSI A21.51. PIPE INTERIOR SHALL HAVE A CEMENT MORTAR LINING WITH AN ASPHALTIC SEAL COAT CONFORMING TO AWWA/ANSI C104/A21.4. THE WEIGHT AND CLASS DESIGNATION SHALL BE PAINTED IN WHITE ON THE EXTERIOR SURFACE OF ALL PIPE AND FITTINGS. MANUFACTURER'S CODE OR SERIAL NUMBER SHALL BE PROVIDED ON THE BELL OF EACH PIPE JOINT.
7. ALL DUCTILE FITTINGS SHALL BE MECHANICAL JOINT WITH A MINIMUM PRESSURE RATING OF 250 PSI AND SHALL CONFORM TO THE REQUIREMENTS OF ANSI/AWWA STANDARD A21.10/C110. ALL FITTING SHALL BE COATED AND LINED AS SPECIFIED ABOVE FOR DUCTILE IRON PIPE.
8. RESTRAINED JOINTS SHALL BE PROVIDED AT ALL FITTINGS AND HYDRANTS AS SHOWN ON DETAILS.
9. ALL COMPONENTS OF THE WATER SYSTEM, INCLUDING FITTINGS, HYDRANTS, CONNECTIONS, AND VALVES SHALL REMAIN UNCOVERED UNTIL PROPERLY PRESSURE TESTED AND ACCEPTED BY THE OWNER'S ENGINEER. PRESSURE TESTS TO BE IN ACCORDANCE WITH LOCAL REGULATORY AGENCY SPECIFICATIONS. CONTRACTOR TO NOTIFY OWNER'S ENGINEER AND LOCAL INSPECTORS 48 HOURS IN ADVANCE OF PERFORMING TESTS.
10. CONTRACTOR TO PERFORM CHLORINATION AND BACTERIOLOGICAL SAMPLING AND OBTAIN CLEARANCE OF DOMESTIC WATER SYSTEM. COPIES OFF ALL BACTERIOLOGICAL TESTS TO BE SUBMITTED TO OWNER'S ENGINEER.

SANITARY SEWER

1. SEE PIPE SEPARATION REQUIREMENTS, THIS SHEET.
2. ALL SANITARY SEWER MAINS AND LATERALS SHALL HAVE A MINIMUM OF 36 INCHES OF COVER.
3. ALL ON SITE PVC GRAVITY SANITARY SEWER PIPE SHALL BE MADE OF MATERIAL HAVING A CELL CLASSIFICATION OF 12454 B, 12454 C OR 13354 B AS DEFINED IN ASTM D–1784. PVC PIPE AND FITTINGS USED IN THE GRAVITY SYSTEM SHALL MEET THE REQUIREMENTS OF ASTM D3034 SDR 35 TO A DEPTH OF 15' AND SDR 26 AT A DEPTH BEYOND 15'.
4. ALL ON SITE DUCTILE IRON PIPE SHALL BE CLASS 52 AND SHALL RECEIVE INTERIOR AND EXTERIOR BITUMINOUS COATING IN ACCORDANCE WITH ANSI A 21.6, A 21.8, OR A 21.51.
5. ALL SANITARY SEWER WORK SHALL CONFORM WITH APPLICABLE AGENCY STANDARDS AND SPECIFICATIONS, LATEST EDITION THERE OF.
6. PRIOR TO COMMENCING WORK WHICH REQUIRES CONNECTING NEW SANITARY SEWER LINES TO EXISTING LINES OR APPURTENANCES, THE CONTRACTOR SHALL VERIFY LOCATION AND ELEVATION OF ALL EXISTING UTILITIES NEAR THE POINT OF CONNECTION AND NOTIFY OWNER'S ENGINEER OF ANY CONFLICTS OR DISCREPANCIES WITH DESIGN INFORMATION SHOWN IN THESE PLANS.
7. ALL GRAVITY SEWER PIPING SHALL BE SUBJECT TO A VISUAL INSPECTION BY THE OWNER'S ENGINEER PRIOR TO PLACEMENT OF BASE AND PAVING AND AGAIN PRIOR TO OBTAINING CERTIFICATE OF OCCUPANCY. CONTRACTOR TO NOTIFY THE ENGINEER 48 HOURS IN ADVANCE TO SCHEDULE INSPECTIONS.
8. THE CONTRACTOR SHALL PERFORM A CLOSED CIRCUIT TELEVISION INSPECTION ON ALL GRAVITY SEWERS IN ACCORDANCE WITH THE REGULATORY AGENCY HAVING JURISDICTION PRIOR TO FINAL ACCEPTANCE.
9. ALL WASTE–WATER LATERALS TO HAVE A MINIMUM OF 36" COVER AT THE RIGHT–OF–WAY LINE.

PIPE SEPARATION REQUIREMENTS:

FOR THE PURPOSE OF THIS SECTION, THE PHRASE "WATER MAINS" SHALL MEAN MAINS, INCLUDING TREATMENT PLANT PROCESS PIPING, CONVEYING EITHER RAW, PARTIALLY TREATED, OR FINISHED DRINKING WATER; FIRE HYDRANT LEADS; AND SERVICE LINES THAT ARE UNDER THE CONTROL OF A PUBLIC WATER SYSTEM AND THAT HAVE AN INSIDE DIAMETER OF THREE INCHES OR GREATER.

1. HORIZONTAL SEPARATION BETWEEN UNDERGROUND WATER MAINS AND SANITARY OR STORM SEWERS, WASTEWATER OR STORM WATER FORCE MAINS, RECLAIMED WATER PIPELINES, AND ON–SITE SEWAGE TREATMENT AND DISPOSAL SYSTEMS
   A. NEW OR RELOCATED, UNDERGROUND WATER MAINS SHALL BE LAID TO PROVIDE A HORIZONTAL DISTANCE OF AT LEAST THREE FEET BETWEEN THE OUTSIDE OF THE WATER MAIN AND THE OUTSIDE OF ANY EXISTING OR PROPOSED STORM SEWER, STORM WATER FORCE MAIN, OR PIPELINE CONVEYING RECLAIMED WATER REGULATED UNDER PART III OF CHAPTER 62–610, F.A.C.
   B. NEW OR RELOCATED, UNDERGROUND WATER MAINS SHALL BE LAID TO PROVIDE A HORIZONTAL DISTANCE OF AT LEAST THREE FEET, AND PREFERABLY TEN FEET, BETWEEN THE OUTSIDE OF THE WATER MAIN AND THE OUTSIDE OF ANY EXISTING OR PROPOSED VACUUM–TYPE SANITARY SEWER.
   C. NEW OR RELOCATED, UNDERGROUND WATER MAINS SHALL BE LAID TO PROVIDE A HORIZONTAL DISTANCE OF AT LEAST SIX FEET, AND PREFERABLY TEN FEET, BETWEEN THE OUTSIDE OF THE WATER MAIN AND THE OUTSIDE OF ANY EXISTING OR PROPOSED GRAVITY– OR PRESSURE–TYPE SANITARY SEWER, WASTEWATER FORCE MAIN, OR PIPELINE CONVEYING RECLAIMED WATER NOT REGULATED UNDER PART III OF CHAPTER 62–610, F.A.C. THE MINIMUM HORIZONTAL SEPARATION DISTANCE BETWEEN WATER MAINS AND GRAVITY–TYPE SANITARY SEWERS SHALL BE REDUCED TO THREE FEET WHERE THE BOTTOM OF THE WATER MAIN IS LAID AT LEAST SIX INCHES ABOVE THE TOP OF THE SEWER.
   D. NEW OR RELOCATED, UNDERGROUND WATER MAINS SHALL BE LAID TO PROVIDE A HORIZONTAL DISTANCE OF AT LEAST TEN FEET BETWEEN THE OUTSIDE OF THE WATER MAIN AND ALL PARTS OF ANY EXISTING OR PROPOSED "ON–SITE SEWAGE TREATMENT AND DISPOSAL SYSTEM" AS DEFINED IN SECTION 381.0065(2), F.S., AND RULE 64E–6.002, F.A.C.
2. VERTICAL SEPARATION BETWEEN UNDERGROUND WATER MAINS AND SANITARY OR STORM SEWERS, WASTEWATER OR STORM WATER FORCE MAINS, AND RECLAIMED WATER PIPELINES.
   A. NEW OR RELOCATED, UNDERGROUND WATER MAINS CROSSING ANY EXISTING OR PROPOSED GRAVITY– OR VACUUM–TYPE SANITARY SEWER OR STORM SEWER SHALL BE LAID SO THE OUTSIDE OF THE WATER MAIN IS AT LEAST SIX INCHES, AND PREFERABLY 12 INCHES, ABOVE OR AT LEAST 12 INCHES BELOW THE OUTSIDE OF THE OTHER PIPELINE. HOWEVER, IT IS PREFERABLE TO LAY THE WATER MAIN ABOVE THE OTHER PIPELINE.
   B. NEW OR RELOCATED, UNDERGROUND WATER MAINS CROSSING ANY EXISTING OR PROPOSED PRESSURE–TYPE SANITARY SEWER, WASTEWATER OR STORM WATER FORCE MAIN, OR PIPELINE CONVEYING RECLAIMED WATER SHALL BE LAID SO THE OUTSIDE OF THE WATER MAIN IS AT LEAST 12 INCHES ABOVE OR BELOW THE OUTSIDE OF THE OTHER PIPELINE. HOWEVER, IT IS PREFERABLE TO LAY THE WATER MAIN ABOVE THE OTHER PIPELINE.
   C. AT THE UTILITY CROSSINGS DESCRIBED IN PARAGRAPHS (A) AND (B) ABOVE, ONE FULL LENGTH OF WATER MAIN PIPE SHALL BE CENTERED ABOVE OR BELOW THE OTHER PIPELINE SO THE WATER MAIN JOINTS WILL BE AS FAR AS POSSIBLE FROM THE OTHER PIPELINE. ALTERNATIVELY, AT SUCH CROSSINGS, THE PIPES SHALL BE ARRANGED SO THAT ALL WATER MAIN JOINTS ARE AT LEAST THREE FEET FROM ALL JOINTS IN VACUUM–TYPE SANITARY SEWERS, STORM SEWERS, STORM WATER FORCE MAINS, OR PIPELINES CONVEYING RECLAIMED WATER REGULATED UNDER PART III OF CHAPTER 62–610, F.A.C., AND AT LEAST SIX FEET FROM ALL JOINTS IN GRAVITY– OR PRESSURE–TYPE SANITARY SEWERS, WASTEWATER FORCE MAINS, OR PIPELINES CONVEYING RECLAIMED WATER NOT REGULATED UNDER PART III OF CHAPTER 62–610, F.A.C., AND AT LEAST SIX FEET FROM ALL JOINTS IN GRAVITY– OR PRESSURE–TYPE SANITARY SEWERS, WASTEWATER FORCE MAINS, OR PIPELINES CONVEYING RECLAIMED WATER NOT REGULATED UNDER PART III OF CHAPTER 62–610, F.A.C.
3. SEPARATION BETWEEN WATER MAINS AND SANITARY OR STORM SEWER MANHOLES
   A. NO WATER MAIN SHALL PASS THROUGH, OR COME INTO CONTACT WITH, ANY PART OF A SANITARY SEWER MANHOLE.
   B. EFFECTIVE AUGUST 28, 2003, WATER MAINS SHALL NOT BE CONSTRUCTED OR ALTERED TO PASS THROUGH, OR COME INTO CONTACT WITH, ANY PART OF A STORM SEWER MANHOLE OR INLET STRUCTURE.
4. SEPARATION BETWEEN FIRE HYDRANT DRAINS AND SANITARY OR STORM SEWER

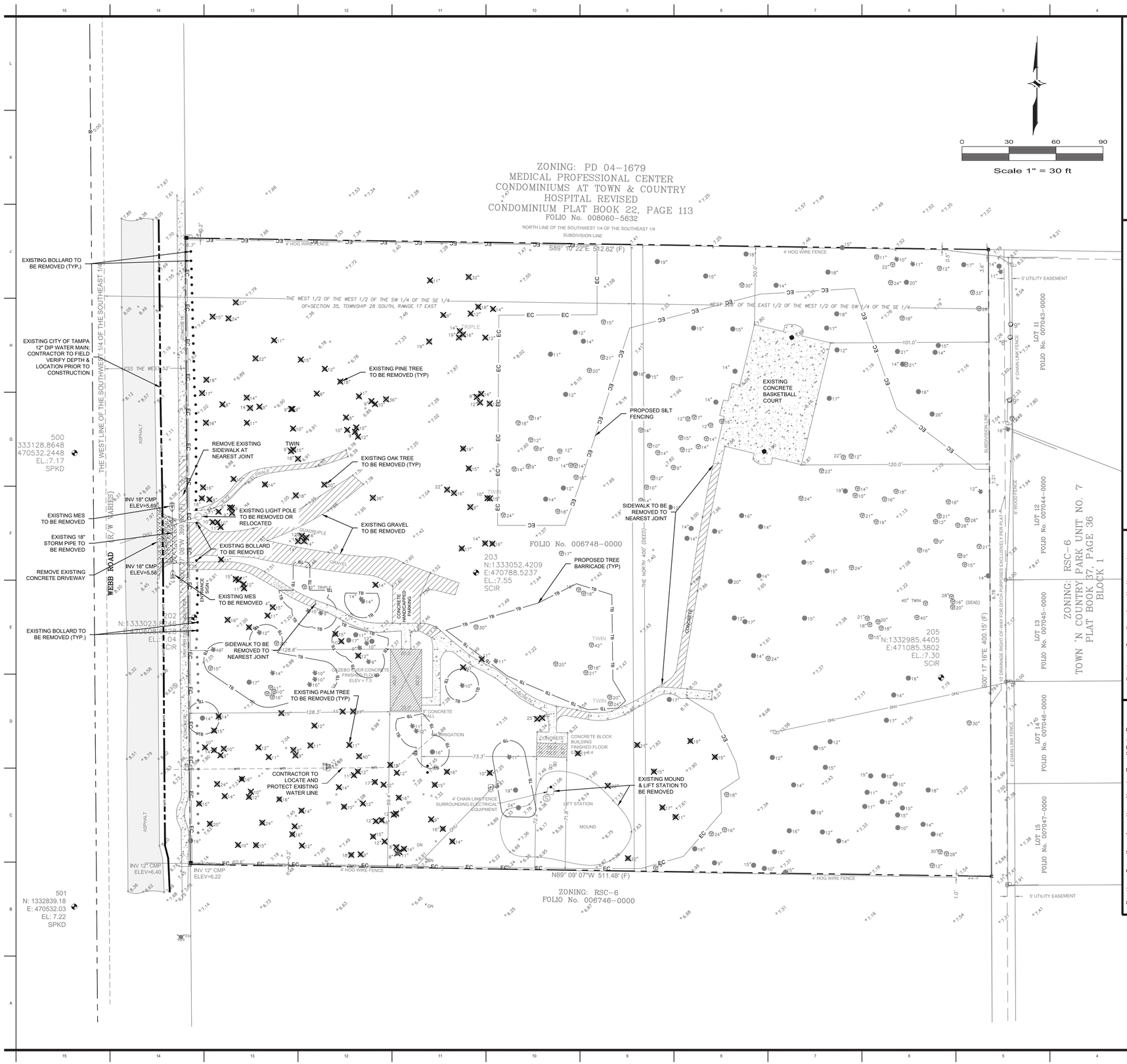

LEGEND

- BASKETBALL HOOP
- BOLLARD
- CABLE PEDESTAL
- CONCRETE POLE WITH ELECTRIC SERVICE BOX
- FIRE HYDRANT
- GUY ANCHOR
- MITERED END SECTION
- SANITARY SEWER CLEANOUT
- SANITARY SEWER MANHOLE
- SIGN (GENERAL PURPOSE)
- SIGN (UNDERGROUND GAS MARKER)
- SPOT ELEVATION
- WATER METER
- WOOD LIGHT POLE
- WOOD UTILITY POLE

TREES (WITH SIZES NOTED):

- ELM
- OAK
- PALM
- PINE
- TREE REMOVAL

EROSION CONTROL NOTES:

1. THE INSTALLATION OF TEMPORARY EROSION CONTROL BARRIERS SHALL BE COORDINATED WITH THE CONSTRUCTION OF THE PERMANENT EROSION CONTROL FEATURES TO THE EXTENT NECESSARY TO ASSURE ECONOMICAL, EFFECTIVE AND CONTINUOUS CONTROL OF EROSION AND WATER POLLUTION THROUGHOUT THE LIFE OF THE CONSTRUCTION PHASE.
2. THE TYPE OF EROSION CONTROL BARRIERS USED SHALL BE GOVERNED BY THE NATURE OF THE CONSTRUCTION OPERATION AND SOIL TYPE THAT WILL BE EXPOSED. SILTY AND CLAYEY MATERIAL USUALLY REQUIRE SOLID SEDIMENT BARRIERS TO PREVENT TURBID WATER DISCHARGE, WHILE SANDY MATERIAL MAY NEED ONLY SILT SCREENS OR HAY BALES TO PREVENT EROSION. FLOATING TURBIDITY CURTAINS SHALL BE USED IN OPEN WATER SITUATIONS. DIVERSION DITCHES OR SWALES MAY BE REQUIRED TO PREVENT TURBID STORMWATER RUNOFF FROM BEING DISCHARGED TO WETLANDS OR OTHER WATER BODIES. IT MAY BE NECESSARY TO EMPLOY A COMBINATION OF BARRIERS, DITCHES AND OTHER EROSION/TURBIDITY CONTROL MEASURES IF CONDITIONS WARRANT.
3. THE CONTRACTOR SHALL SCHEDULE HIS OPERATIONS SUCH THAT THE AREA OF UNPROTECTED ERODIBLE EARTH EXPOSED AT ANY ONE TIME IS NOT LARGER THAN THE MINIMUM AREA NECESSARY FOR EFFICIENT CONSTRUCTION OPERATIONS, AND THE DURATION OF EXPOSED, UNCOMPLETED CONSTRUCTION TO THE ELEMENTS SHALL BE AS SHORT AS PRACTICABLE. CLEARING AND GRUBBING SHALL BE SO SCHEDULED AND PERFORMED THAT GRADING OPERATIONS CAN FOLLOW IMMEDIATELY THEREAFTER, AND GRADING OPERATIONS SHALL BE SCHEDULED AND PERFORMED THAT PERMANENT EROSION CONTROL FEATURES CAN FOLLOW IMMEDIATELY THEREAFTER IF CONDITIONS ON THE PROJECT PERMIT.
4. THE CONTRACTOR AND/OR OWNER'S REPRESENTATIVE SHALL PROVIDE ROUTINE MAINTENANCE OF PERMANENT AND TEMPORARY EROSION CONTROL FEATURES UNTIL THE PROJECT IS COMPLETE AND ALL BARED SOILS ARE STABILIZED.
5. SILT FENCE SHALL BE LOCATED AT THE PERIMETER OF CONSTRUCTION LIMITS, AS DEFINED BY FIELD CONDITIONS.
6. CONTRACTOR IS TO PROVIDE EROSION CONTROL AND SEDIMENTATION BARRIER (HAY BALES OR SILTATION CURTAIN) TO PREVENT SILTATION OF ADJACENT PROPERTY, STREETS, STORM SEWERS AND WATERWAYS. IN ADDITION, CONTRACTOR SHALL PLACE STRAW, MULCH OR OTHER SUITABLE MATERIAL ON GROUND IN AREAS WHERE CONSTRUCTION RELATED TRAFFIC IS TO ENTER AND EXIT SITE. IF, IN THE OPINION OF THE ENGINEER AND/OR LOCAL AUTHORITIES, EXCESSIVE QUANTITIES OF EARTH ARE TRANSPORTED OFF-SITE EITHER BY NATURAL DRAINAGE OR BY VEHICULAR TRAFFIC, THE CONTRACTOR IS TO REMOVE SAID EARTH TO THE SATISFACTION OF THE ENGINEER AND/OR AUTHORITIES.
7. IF WIND EROSION BECOMES SIGNIFICANT DURING CONSTRUCTION, THE CONTRACTOR SHALL STABILIZE THE AFFECTED AREA USING SPRINKLING, IRRIGATION OR OTHER ACCEPTABLE METHODS.
8. ALL EXISTING SIDEWALK CRACKED OR DAMAGED SHALL BE REPLACED.
9. REFER TO THE STATE OF FLORIDA E&SC DESIGNER AND REVIEWER MANUAL, DATED JULY 2013 FOR ADDITIONAL EROSION AND SEDIMENT CONTROL INFORMATION.

DEMOLITION NOTES

1. PRIOR TO THE INITIATION OF SITE CONSTRUCTION, THE CONTRACTOR SHALL VERIFY THE LOCATION OF ALL UTILITIES INCLUDING BUT NOT LIMITED TO GAS, WATER, ELECTRIC, COMMUNICATION, CABLE TV, SANITARY AND STORM SEWER BOTH ON AND ADJACENT TO THE SITE.
2. CONTRACTOR TO REMOVE ALL IMPROVEMENTS WITHIN THE LIMITS OF CONSTRUCTION EXCEPT AS NOTED.
3. CONTRACTOR TO COORDINATE WITH LOCAL UTILITY OWNERS TO DISCONNECT/RELOCATE THEIR FACILITIES WITHIN THE LIMITS OF CONSTRUCTION PRIOR TO ANY DEMOLITION.
4. FUGITIVE DUST EMISSIONS DURING DEMOLITION SHALL BE MAINTAINED TO AN ACCEPTABLE LEVEL BY CONTRACTOR, IN ACCORDANCE WITH THE CONSTRUCTION NOTES AND TESTING SCHEDULE, SHEET C-2
5. REMOVE OR CAP ALL UTILITIES TO EXIST STRUCTURES WHICH ARE TO BE REMOVED. CONTRACTOR TO COORDINATE WITH UTILITY OWNERS PRIOR TO MAKING ANY UTILITY ADJUSTMENTS.
6. CONTRACTOR TO DEMOLISH, REMOVE AND DISPOSE OF ALL ASPHALT, CONCRETE, SIDEWALKS, CURBING, BUILDINGS AND BUILDING FOUNDATIONS WITHIN THE LIMITS OF CONSTRUCTION UNLESS OTHERWISE NOTED ON PLANS. DISPOSAL SHALL BE IN ACCORDANCE WITH ALL APPLICABLE LOCAL REGULATIONS.
7. CONTRACTOR TO PROTECT PROPERTY CORNERS DURING DEMOLITION AND CONSTRUCTION
8. DURING LAND ALTERATION AND CONSTRUCTION ACTIVITIES, IT SHALL BE UNLAWFUL TO REMOVE VEGETATION BY GRUBBING OR TO PLACE SOIL DEPOSITS, DEBRIS, SOLVENTS, CONSTRUCTION MATERIAL, MACHINERY OR OTHER EQUIPMENT OF ANY KIND WITHIN THE DRIPLINE OF A TREE TO REMAIN ON THE SITE.

SURVEYOR'S NOTES

LEGAL DESCRIPTION:

THE NORTH 400 FEET OF THE W ½ OF THE SW ¼ OF THE SE ¼ OF SECTION 35, TOWNSHIP 28 SOUTH, RANGE 17 EAST, LESS THE WEST 52 FEET THEREOF AND THE NORTH 400 FEET OF THE WEST 228 FEET OF THE E ½ OF THE W ½ OF THE SW ¼ OF THE SE¼ OF SECTION 35, TOWNSHIP 28 SOUTH, RANGE 17 EAST.

NOTES:

1. NO UNDERGROUND INSTALLATIONS OR IMPROVEMENTS HAVE BEEN LOCATED, EXCEPT AS NOTED.
2. NO INSTRUMENTS OF RECORD REFLECTING EASEMENTS, RIGHTS OF WAY, AND/OR OWNERSHIP WERE FURNISHED TO THIS SURVEYOR, EXCEPT AS SHOWN.
3. UNLESS OTHERWISE SHOWN HEREON, NO JURISDICTIONAL WETLAND AREAS OR OTHER TOPOGRAPHIC FEATURES HAVE BEEN LOCATED.
4. THIS OFFICE DID NOT PERFORM A TITLE SEARCH OF THE PUBLIC RECORDS TO VERIFY OR CONFIRM OWNERSHIP NOR WAS ONE PROVIDED BY THE CLIENT.
5. THE COORDINATES, BEARINGS AND DISTANCES SHOWN HEREON ARE BASED ON GRID COORDINATES OF THE FLORIDA WEST ZONE TRANSVERSE MERCATOR STATE PLANE COORDINATE SYSTEM NAD83 (2011 ADJUSTMENT).
6. ELEVATIONS SHOWN HEREON ARE EXPRESSED IN US SURVEY FEET AND ARE BASED ON HILLSBOROUGH COUNTY BENCHMARK "VA-294," WITH A PUBLISHED ELEVATION OF 6.48, NAVD 88.
7. THIS IS A BOUNDARY AND TOPOGRAPHIC SURVEY WITH TREE LOCATION.
8. THE LAST DAY OF FIELD WORK WAS MAY 25, 2019.

WILDERARCHITECTURE, INC.
1315 E. SEVENTH AVENUE
SUITE 106
TAMPA, FLORIDA 33605.3607
TELEPHONE 813.242.6677
FACSIMILE 813.242.6683
wilderarchitecture.com
AA26000655

LAUREN DECKER CAMPO
LICENSE
No. 57421
STATE OF FLORIDA
PROFESSIONAL ENGINEER

Lauren D. Campo P.E. # 57421 09/16/2020

CAMPO ENGINEERING, INC.
FBPR REGISTRY NO.: 28726
1725 EAST 5TH AVENUE
TAMPA, FL. 33605
PHONE: (813) 215-7372
FAX: (813) 902-8782

HILLSBOROUGH COUNTY BOARD OF COUNTY COMMISSIONERS
COUNTY CENTER
601 E KENNEDY BLVD
TAMPA, FL 33601

HILLSBOROUGH COUNTY
NORTHWEST AREA HEAD START

PROJECT #: 2010-00	
DISTRIBUTION	DATE
90% CONST DOCS	08.19.2020

EXISTING CONDITIONS, DEMO & EROSION CONTROL PLAN

C-3

G:\Projects\19-026 - HC Church Park Improvements\Drawings\Design & Construction\19-026 - Demo Plan.dwg - Printed Sep 16, 2020-1:24pm by: GageS

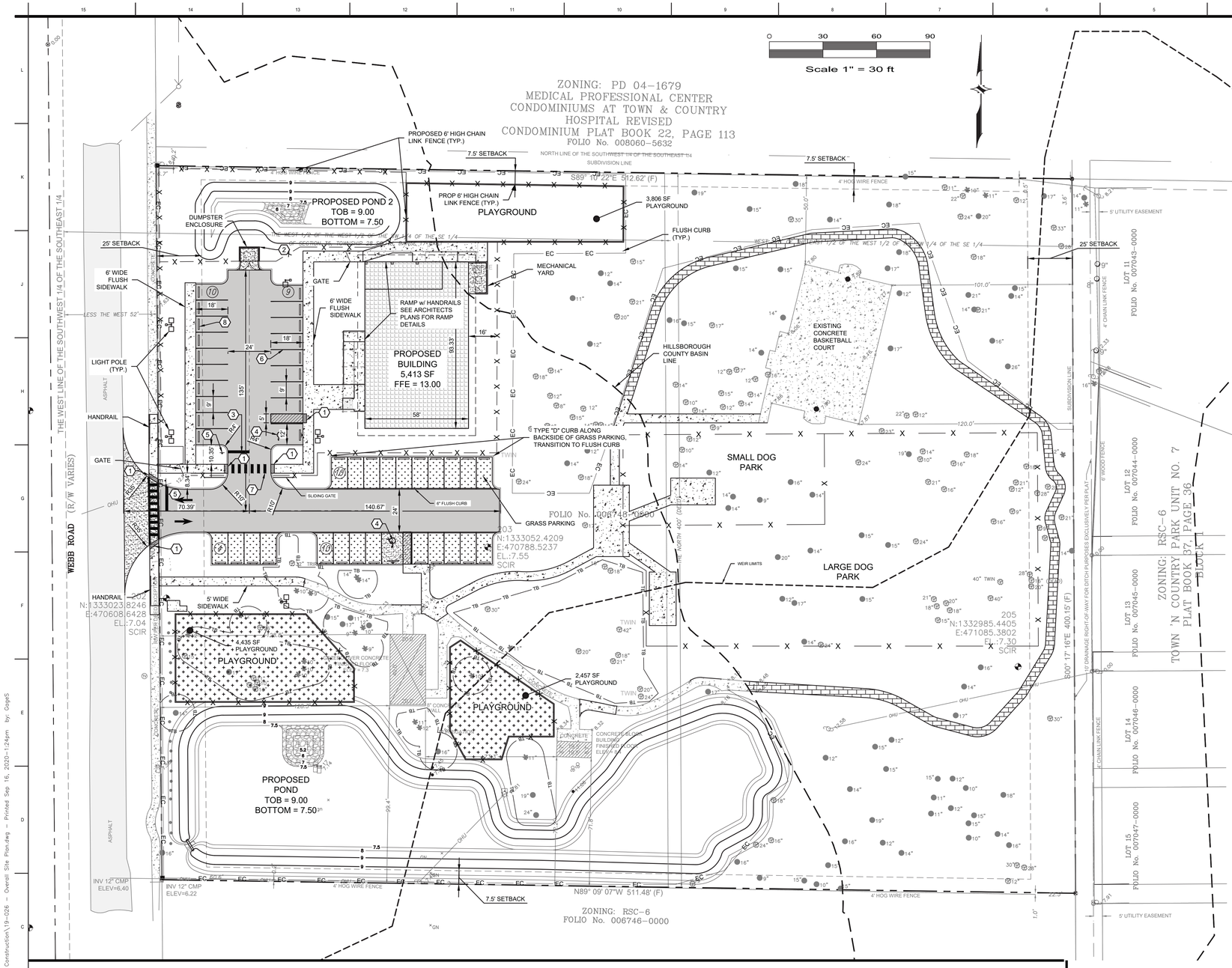

LEGEND

- PROPERTY LINE
- PROPOSED SILT FENCE
- PROPOSED FENCE
- PROPOSED BUILDING
- EXISTING BUILDING
- PROPOSED VUA CONCRETE
- PROPOSED TURF
- PROPOSED SIDEWALK CONCRETE
- EXISTING CONCRETE
- EXISTING ASPHALT PAVEMENT
- PROPOSED ASPHALT PAVEMENT
- PROPOSED POROUS CONCRETE
- PROPOSED GRASS PARKING

SITE DATA TABLE

TOTAL PROJECT AREA:	204,808 SF / ±4.70 AC
ADDRESS:	5631 WEBB RD. TAMPA, FL 33615
JURISDICTION:	HILLSBOROUGH COUNTY
FOLIO NUMBER:	006748-0000
EXISTING ZONING:	RSC-6
ADJACENT ZONING: NORTH: EAST: SOUTH: WEST:	 PD RSC-6 CG RMC-20
CURRENT USE:	PARK
PROPOSED BUILDING:	5,413 SF
REQUIRED PARKING:	3.2 SPACES PER 1,000 SF 3.2x(5,413 SF / 1,000 SF) = 17 SPACES
PROPOSED PARKING:	18 REGULAR SPACES 24 GRASS SPACES + 2 HC SPACE 44 TOTAL SPACES

FLOOD ZONE:
THE SITE IS LOCATED WITHIN FLOOD ZONE "AE" (BASE FLOOD ELEVATION (BFE) OF 12.0' (NAVD88) PER FEMA FIRM COMMUNITY PANEL 12057C0327J, THAT HAS A PRELIMINARY EFFECTIVE DATE OF 10/26/2018. ALSO, THE COUNTY'S APPROVED SWMM MODEL INDICATES THE 100-YEAR FLOOD ELEVATION WITHIN THE VICINITY OF THIS SITE IS 7.64' FOR THE WEST SIDE AND 8.04' FOR THE EAST SIDE.

PROJECT AREAS:

EXISTING BUILDINGS TO REMAIN:	955 SF ~ 0.47%	~ 0.02 AC
EXISTING CONCRETE TO REMAIN:	6,369 SF ~ 3.11%	~ 0.15 AC
PROPOSED BUILDING:	5,413 SF ~ 2.64%	~ 0.12 AC
PROPOSED VEHICLE USE AREA:	10,856 SF ~ 5.30%	~ 0.25 AC
PROPOSED CONC. & S/W:	7,224 SF ~ 3.53%	~ 0.17 AC
PROPOSED POROUS CONC:	3,366 SF ~ 1.64%	~ 0.08 AC
PROPOSED GRASS PARKING:	3,792 SF ~ 1.85%	~ 0.09 AC
PROPOSED TURF:	6,892 SF ~ 3.36%	~ 0.16 AC
PROPOSED POND:	26,203 SF ~ 12.79%	~ 0.60 AC
PROPOSED OPEN SPACE:	133,623 SF ~ 65.24%	~ 3.07 AC
TOTAL SITE AREA:	204,808 SF ~ 100.00%	~ 4.70 AC

PRE DEVELOPMENT IMPERVIOUS AREA = 11,246 SF (5.49%)
POST DEVELOPMENT IMPERVIOUS AREA = 30,863 SF (15.07%)
ADDITIONAL IMPERVIOUS ADDED TO SITE = +19,617 SF (+9.58%)

GENERAL NOTES

1. THE PROPOSED ACTIVITIES SHALL COMPLY WITH HILLSBOROUGH COUNTY DEVELOPMENT REGULATIONS AND FLORIDA DEPARTMENT OF EDUCATION (LATEST EDITION).
2. ON-SITE SIDEWALKS TO BE PROVIDED AND BUILT IN ACCORDANCE WITH THE FLORIDA DEPARTMENT OF EDUCATION REGULATIONS (LATEST EDITION). ALL PROPOSED SIDEWALKS SHALL MEET ADA REQUIREMENTS (LATEST EDITION).
3. BUFFERING AND SCREENING SHALL BE PROVIDED IN ACCORDANCE WITH HILLSBOROUGH COUNTY LAND DEVELOPMENT CODE.
4. OPERATION AND MAINTENANCE OF THE STORMWATER AREAS PERFORMED BY THE PRIVATE OWNER.
5. SITE ACCESS HAS BEEN DESIGNED FOR EMERGENCY AND PARATRANSIT VEHICLES.
6. ALL EASEMENTS SHALL BE DEDICATED TO THE APPROPRIATE ENTITY.
7. WATER AND WASTEWATER ARE PROVIDED BY HILLSBOROUGH COUNTY.
8. EXISTING OFFSITE UTILITY LOCATIONS TO BE PROVIDED BY SUBSURFACE UTILITY LOCATE COMPANY.
9. SEWER COLLECTION SYSTEM ON SITE WILL BE OWNED AND OPERATED BY THE PROPERTY OWNER.
10. PLANS SHALL BE IN ACCORDANCE WITH NFPA 1 AND NFPA 101, 2009 EDITION (FFPC 2010 EDITION).
11. ALL CONSTRUCTION, MATERIALS, AND WORKMANSHIP ARE TO BE IN ACCORDANCE WITH COUNTY AND FLORIDA DEPARTMENT OF EDUCTION STANDARDS, LATEST EDITIONS.
12. GRASS AND MULCH, OR SOLID SOD, ALL AREAS IN EXISTING RIGHT-OF-WAY DISTURBED BY CONSTRUCTION.
13. CONTRACTOR IS TO COORDINATE ALL WORK WITHIN, BUT NOT LIMITED TO PUBLIC RIGHT-OF-WAY WITH UTILITY COMPANIES IN ORDER TO PREVENT DAMAGE TO UTILITY LINES AND THE MAKING OF ADJUSTMENTS TO SAME, IF REQUIRED.
14. CONTRACTOR SHALL CONTACT THE ENGINEER AND/OR THE OWNER PRIOR TO ANY CONSTRUCTION THAT MAY DAMAGE TREES.

KEY NOTES

1. DETECTABLE WARNING SURFACE PER FDOT INDEX 522-002
2. 11.33'x8' CONCRETE DUMPSTER PAD (10'x7.33' INSIDE CLEAR) & FENCE ENCLOSURE W/ 6 BOLLARDS.
3. 24" WHITE THERMOPLASTIC STOP BAR
4. HANDICAP SIGNING AND MARKINGS PER HILLSBOROUGH COUNTY DETAILS (SEE SHEET C-6)
5. 30"x30" R1-1 STOP SIGN
6. 6" WHITE PARKING STRIPE (TYP)
7. PAVEMENT MARKING (TYP)
8. CONCRETE WHEEL STOP

CRIME PREVENTION THROUGH ENVIRONMENTAL DESIGN (CPTED) NOTES

PER SECTION 6.03.11.c OF THE LDC, THE FOLLOWING REQUIREMENTS APPLY:

A MINIMUM OF ONE CPTED STRATEGY FROM EACH OF THE PRINCIPLES OF NATURAL SURVEILLANCE, NATURAL ACCESS CONTROL AND TERRITORIAL REINFORCEMENT SHALL BE INCORPORATED INTO THE SITE DESIGN PHASE FOR ALL APPLICABLE DEVELOPMENT.

1.NATURAL SURVEILLANCE (REDUCE OPPORTUNITIES) CRIMINAL OPPORTUNITIES CAN BE REDUCED BY CREATING AN ATMOSPHERE THAT DOES NOT ENCOURAGE OR INVITE UNLAWFUL ACTIVITY. STRATEGIES INCLUDE;

A. WELL LIT PUBLIC OUTDOOR AREAS AND PEDESTRIAN WALKWAYS;
B. WELL LIT PARKING AREAS;
C. DIRECTION TO GENERAL PUBLIC ACCESS FROM ALL PARKING AREAS;
D. SIGNS DIRECTING GENERAL PUBLIC TO ENTRANCES FOR GENERAL PUBLIC;
E. EASILY IDENTIFIABLE STORE ENTRANCES;
F. RESTRICT THE ACCESS TO ROOFS OR UPPER LEVELS;
G. ELEVATORS AND STAIRS IN PARKING GARAGES LOCATED ON THE PERIMETER TO PERMIT NATURAL SURVEILLANCE FROM EXTERIOR PUBLIC AREAS VIA GLASS-BACK ELEVATORS AND GLASS AT STAIRS AND ELEVATOR LOBBIES; AND
H. PARKING AREAS DESIGNED IN A WAY TO ACCOMMODATE THE IMMEDIATE OR FUTURE INSTALLATION OF EMERGENCY COMMUNICATIONS.

2. NATURAL ACCESS CONTROL (INCREASE VISIBILITY)
VISIBILITY IN AND AROUND THE BUSINESS AND RESIDENTIAL AREAS WILL HELP TO REDUCE CRIME. STRATEGIES INCLUDE:

A. STORE WINDOWS FACING ALL PARKING AREAS;
B. INTERIOR SHELVES AND DISPLAYS NOT EXCEEDING FIVE FEET IN HEIGHT;
C. WELL LIT INTERIOR/EXTERIOR SPACES;
D. BUILDING-MOUNTED LIGHTING INSTALLED ON ALL EXTERIOR WALLS, ESPECIALLY AT DELIVERY/SERVICE AND ENTRANCES FOR GENERAL PUBLIC;
E. CLEAR VISIBILITY MAINTAINED FROM THE STORE TO THE STREET, PARKING AREAS, PEDESTRIAN WALKWAYS, AND PASSING VEHICLES;
F. ALL ENTRANCES AND EXITS UNDER VISUAL OR ELECTRONIC SURVEILLANCE; AND
G. LANDSCAPING, BUILDINGS, WALLS AND FENCES WHICH DO NOT CREATE HIDING PLACES OR HINDER VISIBILITY.

3. TERRITORIAL REINFORCEMENT

PHYSICAL FEATURES CAN BE USED TO DISTINGUISH PRIVATE AREAS FROM PUBLIC SPACES. RESIDENTIAL AREAS SHOULD BE DESIGNED TO MARK TERRITORY, SENDING A MESSAGE THAT THE PROPERTY BELONGS TO SOMEONE. STRATEGIES TO DIFFERENTIATE PRIVATE AREAS FROM PUBLIC SPACES INCLUDE:

A. LANDSCAPING, SPECIAL PAVEMENT, AND LOW FENCES;
B. SECURITY SYSTEM SIGNAGE DISPLAYED AT ACCESS POINTS;
C. PUBLIC SPACES IDENTIFIED BY WELCOME, DIRECTIONAL, MARQUEE, OR SIMILAR SIGNS; AND
D. WROUGHT IRON, ALUMINUM PICKET OR SIMILAR NON-OPAQUE DECORATIVE GATES USED TO IDENTIFY ENTRANCES OR DIRECT PEDESTRIAN TRAFFIC.

4. MAINTENANCE AND MANAGEMENT
MAINTENANCE AND MANAGEMENT SHALL BE CONSIDERED AT THE SITE DESIGN PHASE, AS THE SELECTION OF MATERIALS AND FINISHES IMPACT THE TYPES OF MAINTENANCE METHODS THAT CAN BE SUSTAINED OVER TIME. PROPER MAINTENANCE PREVENTS REDUCED VISIBILITY DUE TO, FOR EXAMPLE, PLANT OVERGROWTH, AND OBSTRUCTED OR INOPERATIVE LIGHTING. STRATEGIES INCLUDE:

A. LOW-MAINTENANCE LANDSCAPING AND LIGHTING TREATMENTS;
B. LOCATION OF LIGHT FIXTURES AT SUITABLE HEIGHTS FOR EASY MAINTENANCE AND REPLACEMENT; AND
C. POSTING CURRENT INFORMATION INDICATING WHO TO CALL WHEN MAINTENANCE IS REQUIRED, SUCH AS LIGHT BULB BURNOUT, PLANT OVERGROWTH, ETC.

WILDERARCHITECTURE, INC.
1315 E. SEVENTH AVENUE
SUITE 106
TAMPA, FLORIDA 33605.3607
TELEPHONE 813.242.6677
FACSIMILE 813.242.6683
wilderarchitecture.com
AA26000655

LAUREN DECKER CAMPO
LICENSE
No. 57421
STATE OF FLORIDA
PROFESSIONAL ENGINEER
Lauren D. Campo P.E. # 57421 09/16/2020

CEI
CIVIL ENGINEERS CONSTRUCTION MANAGERS PLANNERS
CAMPO ENGINEERING, INC.
FBPR REGISTRY NO.: 26726
1725 EAST 5TH AVENUE
TAMPA, FL. 33605
PHONE: (813) 215-7372
FAX: (813) 902-8782

HILLSBOROUGH COUNTY BOARD
OF COUNTY COMMISSIONERS
COUNTY CENTER
601 E KENNEDY BLVD
TAMPA, FL 33601

HILLSBOROUGH COUNTY
NORTHWEST AREA HEAD START

PROJECT #: 2010-00

DISTRIBUTION	DATE
90% CONST DOCS	08.19.2020

SITE PLAN

C-4

G:\Projects\19-026 - HC Church Park Improvements\Drawings\Design & Construction\19-026 - Overall Site Plan.dwg - Printed Sep 16, 2020 - 1:24pm by: GageS

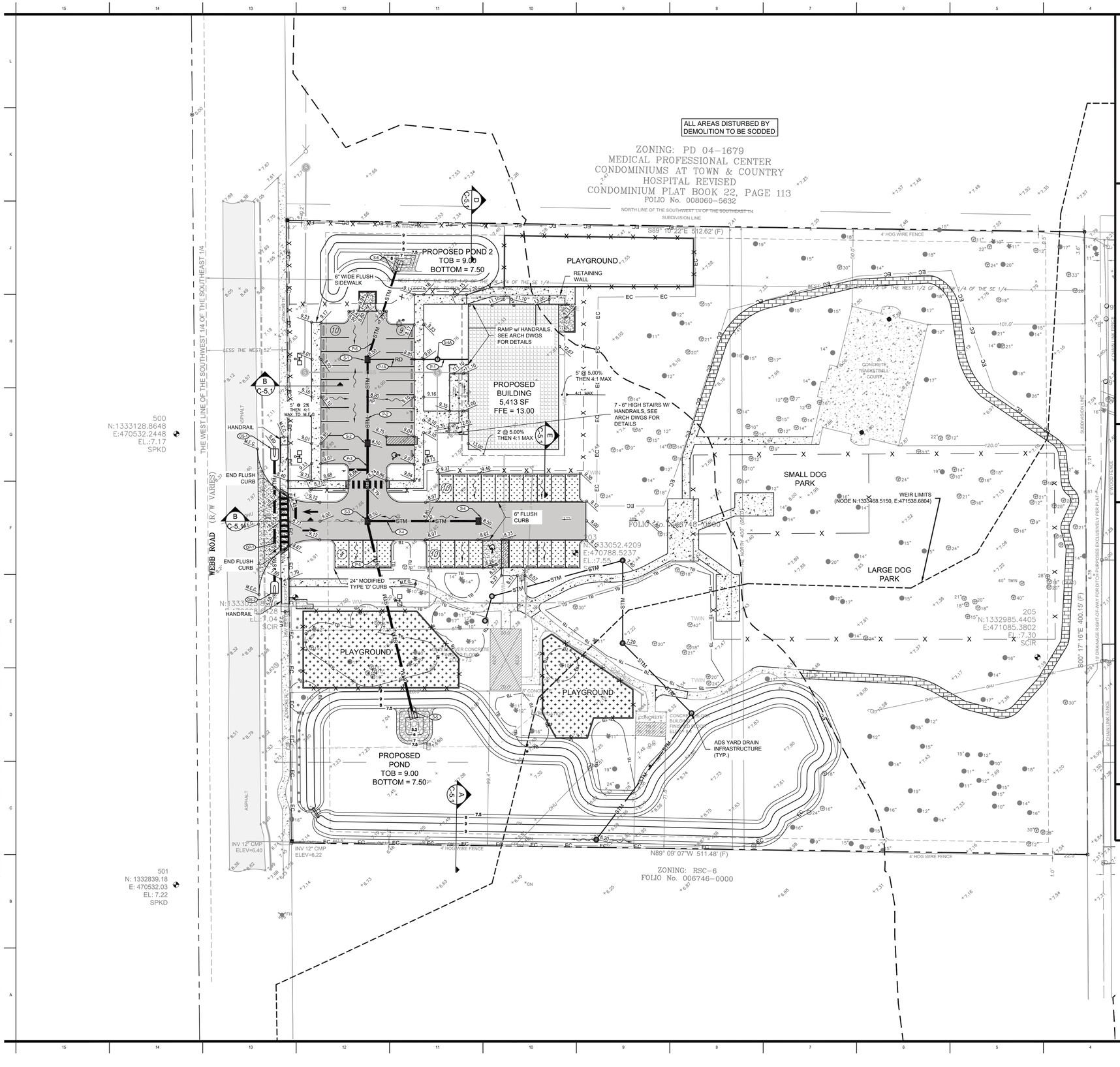

LEGEND

- PROPERTY LINE
- EC — EC — PROPOSED SILT FENCE
- PROPOSED BUILDING
- PROPOSED VUA CONCRETE
- PROPOSED SIDEWALK CONCRETE
- EXISTING ASPHALT PAVEMENT
- PROPOSED ASPHALT PAVEMENT
- A / C-5 — CROSS SECTION NAME / CROSS SECTION SHEET LOCATION
- STM — PROPOSED STORM PIPE
- P-1 — STORM STRUCTURE OR PIPE NUMBER
- FLOW ARROW
- 1.00% — PAVEMENT SLOPE
- 0.00 / 0.00 — PROPOSED SPOT GRADE
- PROPOSED GRASS PARKING
- PROPOSED PLAYGROUND TURF

GENERAL NOTES

1. ALL CONSTRUCTION, MATERIALS, AND WORKMANSHIP ARE TO BE IN ACCORDANCE WITH HILLSBOROUGH COUNTY AND FLORIDA DEPARTMENT OF EDUCATION STANDARDS AND SPECIFICATIONS, LATEST EDITIONS.
2. SOD ALL AREAS IN EXISTING RIGHT-OF-WAYS DISTURBED BY CONSTRUCTION.
3. CONTRACTOR IS TO COORDINATE ALL WORK WITHIN, BUT NOT LIMITED TO, PUBLIC RIGHT- OF-WAYS WITH UTILITY COMPANIES IN ORDER TO PREVENT DAMAGE TO UTILITY LINES AND THE MAKING OF ADJUSTMENTS TO SAME, IF REQUIRED.
4. CONTRACTOR SHALL CONTACT THE ENGINEER AND/OR THE OWNER PRIOR TO ANY CONSTRUCTION THAT MAY DAMAGE TREES.
5. ADJUSTING MANHOLE TOPS TO MATCH GRADE AND SLOPE OF THE FINISH PAVING SHALL BE INCLUDED IN THE RESPECTIVE CONTRACT UNIT PRICE FOR MANHOLES, PAYMENT OF WHICH WILL CONSTITUTE FULL COMPENSATION FOR THE CONSTRUCTION AND COMPLETION OF THE MANHOLE, AND NO ADDITIONAL PAYMENT WILL BE ALLOWED OR MADE FOR ADJUSTING MANHOLE TOPS.
6. ALL FINISH FLOOR ELEVATIONS (FFE) ARE MINIMUMS.
7. SLOPE PERIMETER GRADE TO MATCH EXISTING GRADE AT 4:1 MAXIMUM.
8. ANY AREAS SUBJECT TO EROSION MUST BE ADEQUATELY STABILIZED WITH VEGETATIVE MATERIAL THAT WILL, WITHIN A REASONABLE TIME FRAME, DETER SOIL DISTURBANCE. SODDING, PLUGGING, SPRIGGING OR SEEDING IS ACCEPTABLE FOR STABILIZATION; HOWEVER, SODDING MAY BE REQUIRED IN AREAS OF EROSION-PRONE SOILS OR WHERE SLOPES ARE GREATER THAT 5:1 VEGETATION OTHER THAN GRASS IS ACCEPTABLE UNLESS OTHERWISE SPECIFIED.
9. ALL GRADING OF SIDEWALKS AND PEDESTRIAN WALKWAYS SHALL MEET MINIMUM 'ADA' STANDARDS. SIDEWALK CROSS SLOPES AND DRIVEWAY CROSSINGS FOR SIDEWALKS TO BE 2.0% MAX. SLOPE. ALL SIDEWALK RUNNING SLOPES SHALL NOT EXCEED 5% WITHOUT USE OF PROPER RAMPS PER FDOT OR FLORIDA BUILDING CODE. CONTRACTOR SHALL FIELD VERIFY SIDEWALK FORM BOARDS PRIOR TO CONSTRUCTING WALKWAYS.
10. CONTRACTOR SHALL WRAP ALL INLET GRATES WITH FILTER FABRIC UPON INSTALLATION. FABRIC TO BE REMOVED UPON COMPLETION OF BUILDING CONSTRUCTION.
11. CONTRACTOR SHALL OBTAIN ALL CONTRACTOR RELATED PERMITS.
12. EXISTING GRADES ARE BASED ON NAVD 1988.

CONSTRUCTION NOTES

1. THE CONTRACTOR SHALL BE RESPONSIBLE FOR CONFIRMING THE EXTENTS OF PAVEMENT RESTORATION BASED ON HIS MEANS AND METHODS OF INSTALLING WATER, SEWER AND STORMWATER INFRASTRUCTURE ADJACENT TO OR UNDER EXISTING PAVEMENT AREAS. THE CONTRACTOR IS RESPONSIBLE FOR FOLLOWING LOCAL MUNICIPALITY AND STATE STANDARDS WHEN RESTORING PAVEMENT AND NOT SOLELY RELY ON CIVIL PLANS.
2. CONTRACTOR MUST VERIFY ALL EXISTING WATER, SEWER AND STORM WATER INFRASTRUCTURE WITHIN THE RIGHT OF WAY PRIOR TO ORDERING STRUCTURES. THE CONTRACTOR SHALL PROVIDE THE ENGINEER VERTICAL AND HORIZONTAL LOCATIONS OF INFRASTRUCTURE IN ORDER TO VERIFY ANY POTENTIAL CONFLICTS PRIOR TO ORDERING STRUCTURES.

STRUCTURE DATA

- S-1 FDOT TYPE "C" INLET PER INDEX 425-052 GRATE EL = 8.50 INV EL = 6.00 (N&E)
- S-2 FDOT TYPE "C" INLET PER INDEX 425-052 GRATE EL = 8.50 INV EL = 5.50 (N&S)
- S-3 FDOT TYPE "C" INLET PER INDEX 425-052 GRATE EL = 9.00 INV EL = 5.38 (N&S) INV EL = 5.78 (E)
- S-4 FDOT TYPE "C" INLET PER INDEX 425-052 GRATE EL = 8.50 INV EL = 5.90 (W)
- S-5 18" MES INV EL = 5.13
- S-5A INLINE DRAIN TOP EL = 8.75
- S-6 18" MES INV EL = 6.00
- OS-1 18" MES INV EL = 5.69
- OS-2 18" MES INV EL = 5.58

PIPE DATA

- P-1 73 LF 10" PVC RD @ 1.00%
- P-2 53 LF 15" CLASS VI RCP @ 0.38%
- P-3 50 LF 18" CLASS VI RCP @ 0.40%
- P-4 70 LF 15" CLASS VI RCP @ 0.29%
- P-5 130 LF 18" CLASS VI RCP @ 0.2%
- P-6 60 LF 18" CLASS VI RCP @ 0.32%
- OP-1 93 LF 14"x23" CLASS VI ERCP @ 0.12%

FLOOD ZONE

THE SITE IS LOCATED WITHIN FLOOD ZONE "AE" (BASE FLOOD ELEVATION (BFE) OF 12.0' (NAVD88) PER FEMA FIRM COMMUNITY PANEL 12057C0327J, THAT HAS A PRELIMINARY EFFECTIVE DATE OF 10/26/2018. ALSO, THE COUNTY'S APPROVED SWMM MODEL INDICATES THE 100-YEAR FLOOD ELEVATION WITHIN THE VICINITY OF THIS SITE IS 7.64' FOR THE WEST SIDE AND 8.04' FOR THE EAST SIDE.

0 30 60 90

Scale 1" = 30 ft

1315 E. SEVENTH AVENUE
SUITE 106
TAMPA, FLORIDA 33605.3607

TELEPHONE 813.242.6677
FACSIMILE 813.242.6683

wilderarchitecture.com

AA26000655

WILDERARCHITECTURE, INC.

LAUREN DECKER CAMPO
LICENSE
No. 57421
STATE OF FLORIDA
PROFESSIONAL ENGINEER

Lauren D. Campo P.E. # 57421 09/16/2020

CEI CIVIL ENGINEERS CONSTRUCTION INSPECTORS PLANNERS

CAMPO ENGINEERING, INC.
FBPR REGISTRY NO.: 28726
1725 EAST 5TH AVENUE
TAMPA, FL. 33605
PHONE: (813) 215-7372
FAX: (813) 902-8782

HILLSBOROUGH COUNTY BOARD OF COUNTY COMMISSIONERS
COUNTY CENTER
601 E KENNEDY BLVD
TAMPA, FL 33601

HILLSBOROUGH COUNTY
NORTHWEST AREA HEAD START

PROJECT #: 2010-00	
DISTRIBUTION	DATE
90% CONST DOCS	08.19.2020

PAVING, GRADING & DRAINAGE PLAN

C-5

C:\Projects\19-026 - HC Church Park Improvements\Drawings\Design & Construction\19-026 - PSD Plan.dwg - Printed Sep 16, 2020-1:24pm by: GageS

TYPICAL PAVEMENT SECTION

Pavement Section	Component	Recommended Thickness (in.)
Standard Duty Flexible Pavement Section	Asphalt	1.5
	Base (LBR ≥ 100)	6.0
	Stabilized Subgrade (LBR ≥ 40)	6.0
Heavy Duty Flexible Pavement Section	Asphalt	2.0
	Base (LBR ≥ 100)	8.0
	Stabilized Subgrade (LBR ≥ 40)	12.0
Standard Duty Rigid Pavement Section	Concrete	5.0
	Subgrade (LBR ≥ 20)	12.0
Heavy Duty Rigid Pavement Section	Concrete	6.0
	Subgrade (LBR ≥ 20)	12.0

THESE RECOMMENDATIONS ASSUME AN ADEQUATELY DRAINED PAVEMENT SURFACE AND AT LEAST 12 INCHES OF SEPARATION BETWEEN THE SEASONAL HIGH GROUNDWATER LEVEL AND CRUSHED CONCRETE BASE, AS WELL AS AT LEAST 18 INCHES OF SEPARATION BETWEEN THE SEASONAL HIGH GROUNDWATER LEVEL AND LIMEROCK BASE.

SUBGRADE: SANDY EXISTING SOILS AND SANDY ENGINEERED FILL SOILS SHOULD BE ACCEPTABLE FOR CONSTRUCTION AND SUPPORT OF A FLEXIBLE (LIMEROCK OR CRUSHED CONCRETE BASE) PAVEMENT SECTION AFTER PROPER PROOFROLLING AND SUBSURFACE PREPARATION. ALTERNATIVELY, A RIGID CONCRETE SECTION MAY BE USED.

FILL SOILS SHOULD CONSIST OF REASONABLY CLEAN FINE SANDS (INORGANIC, NON-PLASTIC SANDS CONTAINING LESS THAN 12 PERCENT MATERIAL PASSING THE NO. 200 MESH SIEVE). FOR FLEXIBLE PAVEMENTS, WE RECOMMEND THAT ANY FILL BELOW THE STABILIZED SUBGRADE BE COMPACTED TO AT LEAST 95 PERCENT OF THE MODIFIED PROCTOR MAXIMUM DRY DENSITY (ASTM D-1557). THE UPPER FOOT OF PAVEMENT SUBGRADE SHOULD BE COMPACTED TO 98% ASTM D1557.

TRAFFIC SHOULD NOT BE ALLOWED ON THE SUBGRADE BEFORE THE BASE IS PLACED TO AVOID RUTTING.

BASE: FOR FLEXIBLE PAVEMENTS, WE RECOMMEND THAT EITHER LIMEROCK OR CRUSHED CONCRETE BE CONSIDERED FOR THE BASE. WE RECOMMEND THAT THE BASE BE AT LEAST 6 INCHES THICK. MATERIAL SHOULD MEET FLORIDA DEPARTMENT OF TRANSPORTATION (FDOT) STANDARD SPECIFICATION, SECTION 200 REQUIREMENTS, INCLUDING COMPACTION TO 98 PERCENT OF ITS MAXIMUM DRY DENSITY AS DETERMINED BY THE MODIFIED PROCTOR TEST (ASTM D-1557) AND A MINIMUM LIMEROCK BEARING RATIO (LBR) OF 100. CRUSHED CONCRETE SHOULD HAVE AN LBR VALUE OF 150 AND BE GRADED IN ACCORDANCE WITH FLORIDA DEPARTMENT OF TRANSPORTATION (FDOT) STANDARD SPECIFICATIONS SECTION 204.

A NO.57 WASHED STONE OR WASHED CRUSHED CONCRETE MAY BE USED AS A BASE BENEATH THE RIGID CONCRETE PAVEMENT SECTION. WE RECOMMEND THE BASE BE AT LEAST 4 INCHES THICK.

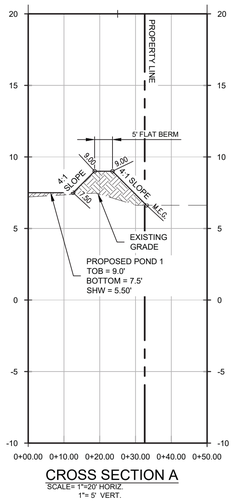

CROSS SECTION A
SCALE= 1"=20' HORIZ.
1"= 5' VERT.

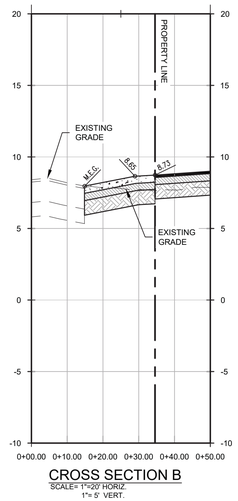

CROSS SECTION B
SCALE= 1"=20' HORIZ.
1"= 5' VERT.

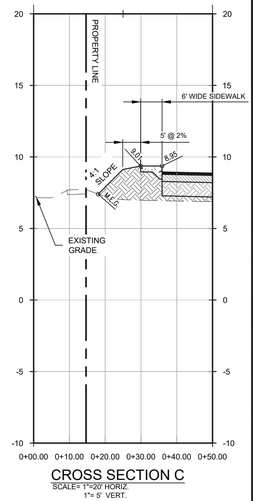

CROSS SECTION C
SCALE= 1"=20' HORIZ.
1"= 5' VERT.

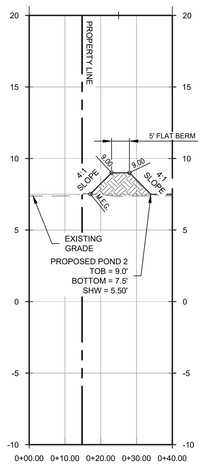

CROSS SECTION D
SCALE= 1"=20' HORIZ.
1"= 5' VERT.

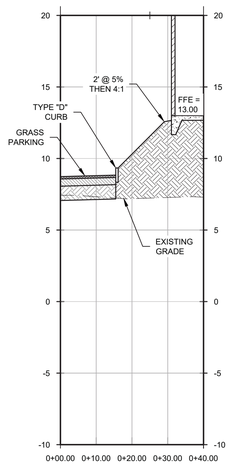

CROSS SECTION E
SCALE= 1"=20' HORIZ.
1"= 5' VERT.

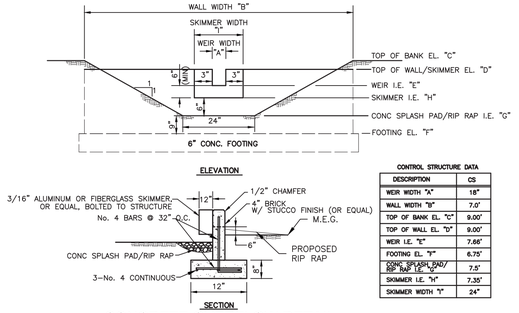

CONCRETE OVERFLOW DETAIL
NTS

CONTROL STRUCTURE DATA

DESCRIPTION	CS
WEIR WIDTH "A"	18"
WALL WIDTH "B"	7.0'
TOP OF BANK EL. "C"	9.00'
TOP OF WALL EL. "D"	9.00'
WEIR I.E. "E"	7.66'
FOOTING EL. "F"	6.75'
CONC. SPLASH PAD/ RIP RAP I.E. "G"	7.5'
SKIMMER I.E. "H"	7.35'
SKIMMER WIDTH "I"	24"

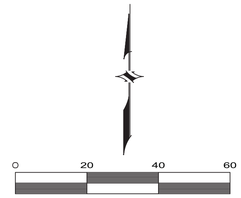

1315 E. SEVENTH AVENUE
SUITE 106
TAMPA, FLORIDA 33605.3607

TELEPHONE 813.242.6677
FACSIMILE 813.242.6683

wilderarchitecture.com

AA26000655

WILDERARCHITECTURE, INC.

LAUREN DECKER CAMPO LICENSE No. 57421 STATE OF FLORIDA PROFESSIONAL ENGINEER

Lauren D. Campo P.E. # 57421 09/16/2020

CAMPO ENGINEERING, INC.
FBPR REGISTRY NO.: 26726
1725 EAST 5TH AVENUE
TAMPA, FL. 33605
PHONE: (813) 215-7372
FAX: (813) 902-8782

HILLSBOROUGH COUNTY BOARD
OF COUNTY COMMISSIONERS
COUNTY CENTER
601 E KENNEDY BLVD
TAMPA, FL 33601

HILLSBOROUGH COUNTY
NORTHWEST AREA HEAD START

PROJECT #: 2010-00

DISTRIBUTION	DATE
90% CONST DOCS	08.19.2020

CROSS SECTIONS

C-5.1

C:\Projects\19-026 - HC Church Park Improvements\Drawings\Design & Construction\19-026 - PSD Plan.dwg - Printed Sep 16, 2020-1:25pm by: Gagel

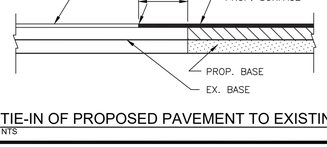

TIE-IN OF PROPOSED PAVEMENT TO EXISTING

NTS

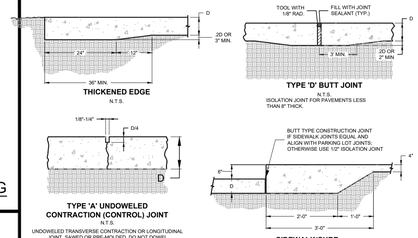

THICKENED EDGE
N.T.S.

TYPE 'D' BUTT JOINT
N.T.S.
ISOLATION JOINT FOR PAVEMENTS LESS THAN 8" THICK.

TYPE 'A' UNDOWELED CONTRACTION (CONTROL) JOINT
N.T.S.
UNDOWELED TRANSVERSE CONTRACTION OR LONGITUDINAL JOINT. SAWED OR PRE-MOLDED. DO NOT DOWEL PAVEMENTS LESS THAN 7" THICK.

SIDEWALK/CURB
N.T.S.

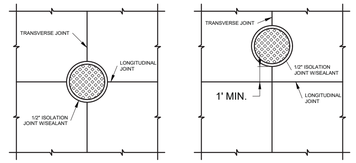

JOINTS AT MANHOLE
N.T.S.

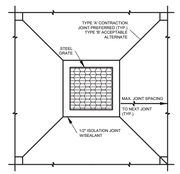

JOINTS AT INLETS
N.T.S.

RECOMMENDED MAX. JOINT SPACINGS

PAVEMENT THICKNESS (INCHES)	RECOMMENDED MAXIMUM JOINT SPACING (FEET)
3.5 (FOR WHITETOPPING ONLY)	6
4.0	10
4.5	10
5.0	12
5.5	12
6.0	15
OVER 6.0	15

NOTE: CONTRACTOR TO SUBMIT A CONCRETE JOINT LAYOUT TO ENGINEER PRIOR TO CONSTRUCTION

GENERAL NOTES:

1. USE ACI OR FC&PA CERTIFIED FLATWORK FINISHER
2. USE ACI 330R-01 GUIDE FOR DESIGN AND CONSTRUCTION OF CONCRETE PARKING LOTS
3. USE ACI 330.1-94 STANDARD SPECIFICATION FOR PLAIN CONCRETE PARKING LOTS
4. ALL CONCRETE USED IN PARKING LOT, UNLESS OTHERWISE INDICATED, SHALL HAVE A COMPRESSIVE STRENGTH OF 4,000 PSI AT 28 DAYS.
5. PREPARE THE SUBGRADE IN ACCORDANCE WITH THE GEOTECHNICAL ENGINEEER'S RECOMMENDATIONS FOR RIGID PAVEMENTS. SUBGRADE SOIL DENSITY TESTING MUST BE COMPLETED AND VERIFIED BY THE GEOTECHNICAL ENGINEER PRIOR TO CONCRETE PLACEMENT.
6. IMPORTED SOIL USE FOR BACK FILL SHOULD BE FREE OF HEAVY CLAY, SILTS, STONES, PLANT ROOT OR OTHER FOREIGN MATERIAL GREATER THAN 12" IN DIAMETER IN ORDER TO ACHIEVE ADEQUATE COMPACTION AROUND ANY FIXED OBJECT IN GROUND. ALTERNATE WILL BE TO USE FLOWABLE FILL.
7. LAYOUT CONTROL JOINT BY STARTING WITH ANY DRAINAGE INLET WITHIN THE PAVEMENT SECTION AND WORK TOWARD EDGE OF PAVEMENT
8. KEEP ALL JOINTS CONTINUOUS
9. CONTROL JOINTS SHALL BE FORMED OR SAWED WITHIN 12 HOURS FROM TIME OF PLACEMENT;
   A. SIDEWALK-SPACING SHALL BE SAME AS WIDTH OF PAVEMENT AND LESS THAN 5 FEET IN LENGTH
   B. PAVEMENT-MAXIMUM SPACING SHALL BE 2.5 TIMES THICKNESS IN UNIT OF FEET AND LESS THAN 15 FEET IN LENGTH (E.G. T=4 INCH SPACING AT 10'x10')
10. CURE CONCRETE IMMEDIATELY AFTER FINISHING OPERATION IS COMPLETED BY USING ONE OF THE FOLLOWING METHODS: WATER, PIGMENTED WATER-BASED CURING COMPOUND OR VISQUEEN AND BURLAP

CURBS:

1. ALL CURBING SHALL BE CONSTRUCTED OF CONCRETE THAT WILL OBTAIN A MINIMUM COMPRESSIVE STRENGTH OF 4,000 PSI (MIN) AT 28 DAYS
2. ALL CONCRETE CURBS SHALL BE SPACED WITH A FULL-DEPTH ½" WIDTH ISOLATION JOINT MATERIAL PRIOR TO PLACEMENT OF ADJACENT CONCRETE PAVEMENT.
3. THERE SHALL BE CONTROL JOINTS, EITHER TOOL OR SAW-CUT, MATCH PAVEMENT JOINTS, UNLESS OTHERWISE SPECIFIED, JOINTS SHALL BE FORMED WITHIN 12 HOURS OF PLACEMENT
4. ALL CURB ENDS THAT DO NOT TIE INTO OTHER FACILITIES SHALL TRANSITION DOWN TO PAVEMENT GRADE IN 24 INCHES
5. CONSTRUCTION JOINT SHALL BE TIED WITH A No.4 TIE BAR EXTENDED 6 INCHES INTO EACH CURB SECTION AND SHALL BE SPACED WITH A FULL-DEPTH ½" WIDTH ISOLATION JOINT MATERIAL

CONCRETE JOINT DETAILS

NTS

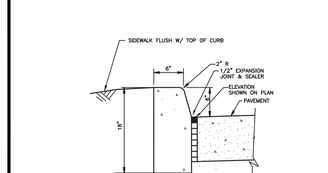

TYPE D

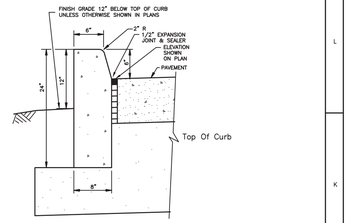

24" MODIFIED TYPE D

NOTE: ALL CONCRETE SHALL BE 4,000 PSI CONCRETE.

*NOTE: WHEN USED ON HIGH SIDE OF ROADWAYS, THE CROSS SLOPE OF THE GUTTER SHALL MATCH THE CROSS SLOPE OF THE ADJACENT PAVEMENT THE THICKNESS OF THE LIP SHALL BE 6", UNLESS OTHERWISE SHOWN ON PLANS.

CURB & CURB AND GUTTER DETAILS (FDOT INDEX 520-001)

NTS

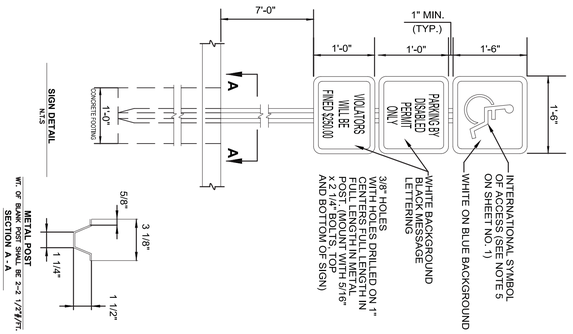

REVISION DATE :	TRANSPORTATION TECHNICAL MANUAL	Hillsborough County Florida	DISABLED PARKING / SIGNING TYPICAL DETAILS	DRAWING NO. TD-1
				SHEET NO. 2 OF 2

NOTES:

METAL POST TO BE GALVANIZED. ALL BOLTS, NUTS, WASHERS AND SCREWS MUST BE RUSTPROOF.
CONCRETE FOR FOOTING SHALL BE PORTLAND CEMENT AND HAVE A MINIMUM COMPRESSIVE STRENGTH OF 3,000 P.S.I.
SIGNS WILL BE FABRICATED BY USING REFLECTING COATING IN THE SYMBOL, MESSAGE AND BORDER APPLIED TO A SHEET ALUMINUM BACKING (.080) IN THICKNESS.
MESSAGE LETTERING SHALL BE UPPER CASE (BLACK)(SERIES C) 1.5" HIGH IN ACCORDANCE WITH MANUAL ON UNIFORM TRAFFIC CONTROL DEVICES, EXCEPT AS NOTED ON SHEET 2 OF 2.
THE SYMBOL IS COMPOSED OF TWO ELEMENTS, A WHITE WHEELCHAIR FIGURE (WHICH SHOULD ALWAYS FACE RIGHT) ON A SQUARE BACKGROUND, INTERNATIONAL BLUE IN COLOR (FED. STD. 595a, COLOR #15180).
SIGN POST SHALL BE MIN. 2'-0" CLEAR FROM BACK OF CURB.
THE USE OF PROPERLY LOCATED BOLLARDS IN ACCESSIBLE PARKING SPACES ARE ACCEPTABLE SUBSTITUTES FOR REGULAR BUMPER GUARD.
MINIMUM NUMBER OF ACCESSIBLE PARKING SPACES SHALL BE PER FLORIDA ACCESSIBILITY BUILDING CODE SECTION 4.6.3.

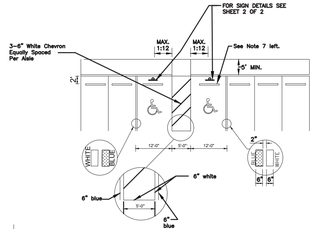

MANDATORY
White on Blue Background

REVISION DATE : 12/08	TRANSPORTATION TECHNICAL MANUAL	Hillsborough County Florida	DISABLED PARKING / MARKING TYPICAL DETAILS	DRAWING NO. TD-1
				SHEET NO. 1 OF 2

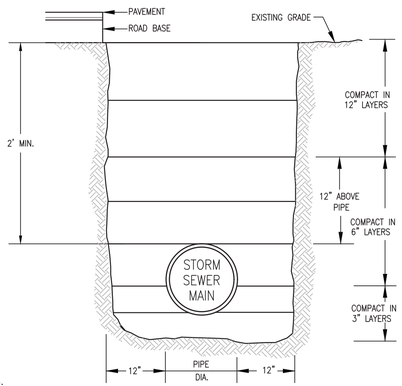

NOTES:

1. TRENCHES LOCATED UNDER PAVEMENT SHALL BE COMPACTED TO 100% OF MAXIMUM DENSITY BY A.A.S.H.T.O. T-99, METHOD C.
2. TRENCHES NOT LOCATED UNDER PAVEMENT SHALL BE COMPACTED TO A FIRMNESS EQUAL EQUAL TO THAT OF THE SOIL ADJACENT TO THE TRENCH.
3. REPLACEMENT OF PAVED SURFACES SHALL BE MADE IN ACCORDANCE TO APPLICABLE LOCAL REGULATIONS.

TRENCH BACKFILL DETAIL

NTS

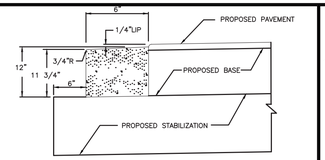

FLUSH CURB DETAIL

NTS

NOTE:
1/2" EXPANSION JOINT EVERY 500', BETWEEN CURB SECTIONS, AT RADII, END OF POUR AND STRUCTURES. (FALSE JOINTS EVERY 10', LONGITUDINALLY. SEE SECTION 520 OF THE FDOT STANDARD SPECIFICATIONS.)

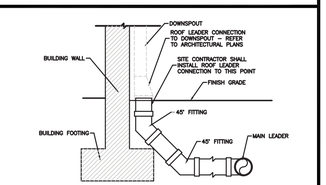

NOTES:

1. REFER TO SITE PLANS FOR PIPE SIZES AND SPECIFICATIONS.
2. SITEWORK CONTRACTOR IS RESPONSIBLE FOR ALL LABOR AND MATERIAL UP TO THE DOWNSPOUT CONNECTION.
3. ACTUAL DOWNSPOUT CONNECTION SHALL BE SUPPLIED AND INSTALLED BY BUILDING CONTRACTOR.

ROOF LEADER CONNECTION DETAIL

NTS

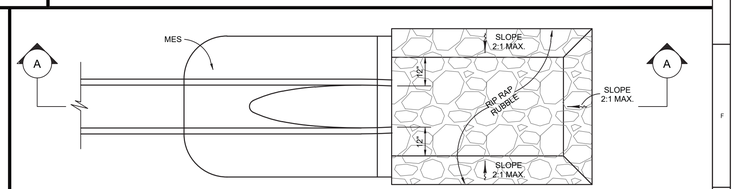

PLAN

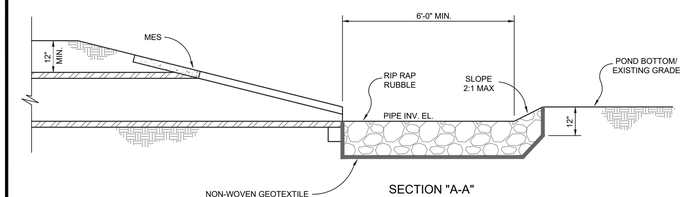

SECTION "A-A"

POND/OUTFALL SUMP DETAIL

NTS

OPERATION

THE PROJECT'S STORMWATER MANAGEMENT SYSTEM IS A GRAVITY OPERATED SYSTEM AND REQUIRES NO OPERATOR ACTION.

MAINTENANCE

1. DITCHES AND SWALES: ALL DITCHES AND SWALES SHALL BE PERIODICALLY MOWED AND CLEANED. DURING THE MOWING OPERATION, DITCHES AND SWALES SHALL BE INSPECTED FOR BARE SPOTS, DAMAGE, AND EROSION. ANY BARE SPOTS GREATER THAN ONE (1) SQUARE FOOT IN AREA SHALL BE SEEDED OR SODDED TO REPLACE THE GRASS COVER. IN CASE OF EROSION OR DAMAGE WHERE UNDERLYING SOIL IS MISSING, THE MISSING SOIL SHALL BE REPLACED AND THE AREA BROUGHT BACK TO GRADE THEN SEEDED OR SODDED AS REQUIRED.
2. INLET GRATES: INLET GRATES WILL BE CHECKED MONTHLY FOR DAMAGE OR BLOCKAGE. ANY DAMAGED GRATES WILL BE REPLACED OR REPAIRED. ANY DEBRIS BLOCKING FULL FLOW THROUGH THE GRATE WILL BE REMOVED.
3. PIPES AND INLETS: PIPES AND INLETS WILL BE INSPECTED YEARLY FOR DAMAGE OR BLOCKAGE. ANY DAMAGED PIPES OR INLETS WILL BE REPAIRED OR REPLACED. ANY TRASH, DEBRIS, OR SAND DEPOSITS WILL BE REMOVED.
4. PONDS: ALL PONDS SHALL BE PERIODICALLY MOWED AND CLEANED. DURING THE MOWING OPERATION, PONDS SHALL BE INSPECTED FOR BARE SPOTS, DAMAGE, AND EROSION. ANY BARE SPOTS GREATER THAN ONE (1) SQUARE FOOT IN AREA SHALL BE SEEDED OR SODDED TO REPLACE THE GRASS COVER. IN CASE OF EROSION OR DAMAGE WHERE UNDERLYING SOIL IS MISSING, THE MISSING SOIL SHALL BE REPLACED AND THE AREA BROUGHT BACK TO GRADE THEN SEEDED OR SODDED AS REQUIRED.

STORMWATER OPERATION & MAINTENANCE INSTRUCTIONS

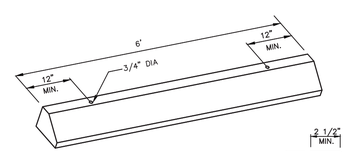

TYPE A

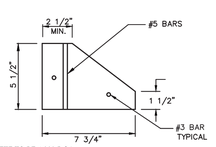

NOTES:

1. CONCRETE TO BE 4,000 P.S.I.
2. WHEEL STOPS TO BE SECURED TO PAVEMENT WITH TWO 18" NO. #5 BARS.
3. RECYCLED PLASTIC WHEEL STOPS MAY BE USED IN LIEU OF CONCRETE.
4. DIMENSIONS OF WHEEL STOPS MAY DIFFER FROM THE ABOVE SPECIFICATIONS IF APPROVED BY ENGINEER.

WHEEL STOP DETAIL

NTS

6" THICK SLAB USES 1 1/2" DEEP JOINT.
4" THICK SLAB USES 1" DEEP JOINT;
EXAMPLE:
SLAB THICKNESS DIVIDED BY 4 (d/4 = DEPTH OF JOINT.) SHALL BE 1/8" TO 1/4" WIDE. DEPTH OF JOINT SHALL BE SPACED AT INTERVALS EQUAL TO SIDEWALK WIDTH. JOINTS SAWED OR PREMOLDED. TRANSVERSE JOINTS SHALL BE – TRANSVERSE OR LONGITUDINAL CONTRACTION JOINTS MAY BE CONTRACTION JOINTS.

EXPANSION JOINTS:
EXPANSION JOINTS ARE TO BE USED BETWEEN SIDEWALKS AND CURB, DRIVEWAYS, SIDEWALK INTERSECTIONS OR AT FIXED OBJECTS. ALL JOINTS SHALL BE 1/4" THICK, AND SHALL BE FORMED WITH PREFORMED EXPANSION JOINT MATERIAL PER F.D.O.T. SPEC. #932–1, AND SHALL MEET AASHTO M–153 OR 213

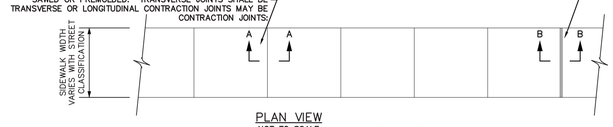

PLAN VIEW
NOT TO SCALE

SIDEWALK NOTES:

1. ALL PLACES WHERE SIDEWALK CROSSES A DRIVEWAY SHALL BE 6" MIN. THICKNESS OF CONCRETE WITH 6"x6" #10 W.W.M. WITH 4,000 PSI CONCRETE
2. SIDEWALKS WITHIN RIGHT OF WAY SHALL BE PER AHJ'S REQUIREMENTS.

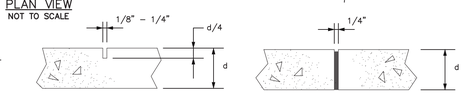

SECTION A–A
NOT TO SCALE
CONTRACTION JOINT

SECTION B–B
NOT TO SCALE
EXPANSION JOINT

TYPICAL CONCRETE SIDEWALK DETAILS

NTS

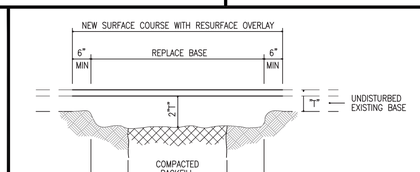

REPLACEMENT BASE 2" T" (MIN. 8") COMPACTED LIMEROCK OR SHELL T = THICKNESS OF ORIGINAL BASE

NOTES:

1. CONTRACTOR TO RESURFACE TO ALL VALVES WITHIN EXISTING ROADWAY AND NOT COVER.
2. ALL GRASSED AREAS DISTURBED WITHIN THE RIGHT–OF–WAY SHALL BE SODDED TO ORIGINAL OR BETTER CONDITION.
3. ALL GEOTECHNICAL TESTING OF WORK WITHIN THE RIGHT–OF–WAY SHALL BE PER CITY SPECIFICATIONS.

PAVEMENT REPLACEMENT DETAIL

NTS

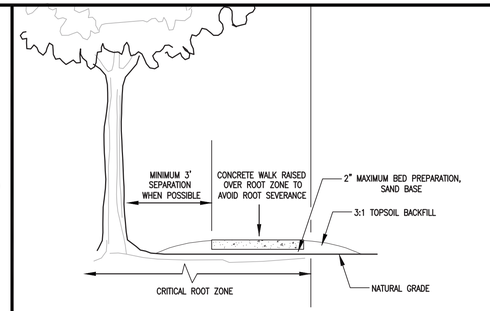

CONCRETE WALK OVER CRITICAL ROOT ZONE DETAIL

NTS

1315 E. SEVENTH AVENUE
SUITE 106
TAMPA, FLORIDA 33605.3607

TELEPHONE 813.242.6677
FACSIMILE 813.242.6683

wilderarchitecture.com

AA26000655

WILDERARCHITECTURE, INC.

LAUREN DECKER CAMPO LICENSE No. 57421 STATE OF FLORIDA PROFESSIONAL ENGINEER

Lauren D. Campo P.E. # 57421 09/16/2020

CEI CIVIL ENGINEERS CONSTRUCTION INSPECTORS PLANNERS

CAMPO ENGINEERING, INC.
FBPR REGISTRY NO.: 26726
1725 EAST 5TH AVENUE
TAMPA, FL. 33605
PHONE: (813) 215-7372
FAX: (813) 902-8782

HILLSBOROUGH COUNTY BOARD OF COUNTY COMMISSIONERS
COUNTY CENTER
601 E KENNEDY BLVD
TAMPA, FL 33601

HILLSBOROUGH COUNTY
NORTHWEST AREA HEAD START

PROJECT #: 2010-00	
DISTRIBUTION	DATE
90% CONST DOCS	08.19.2020

PAVING, GRADING & DRAINAGE DETAILS

C-6

G:\Projects\19-026 – HC Church Park Improvements\Drawings\Design & Construction\19-026 – PGD Details.dwg – Printed Sep 16, 2020-1:25pm by: GageS

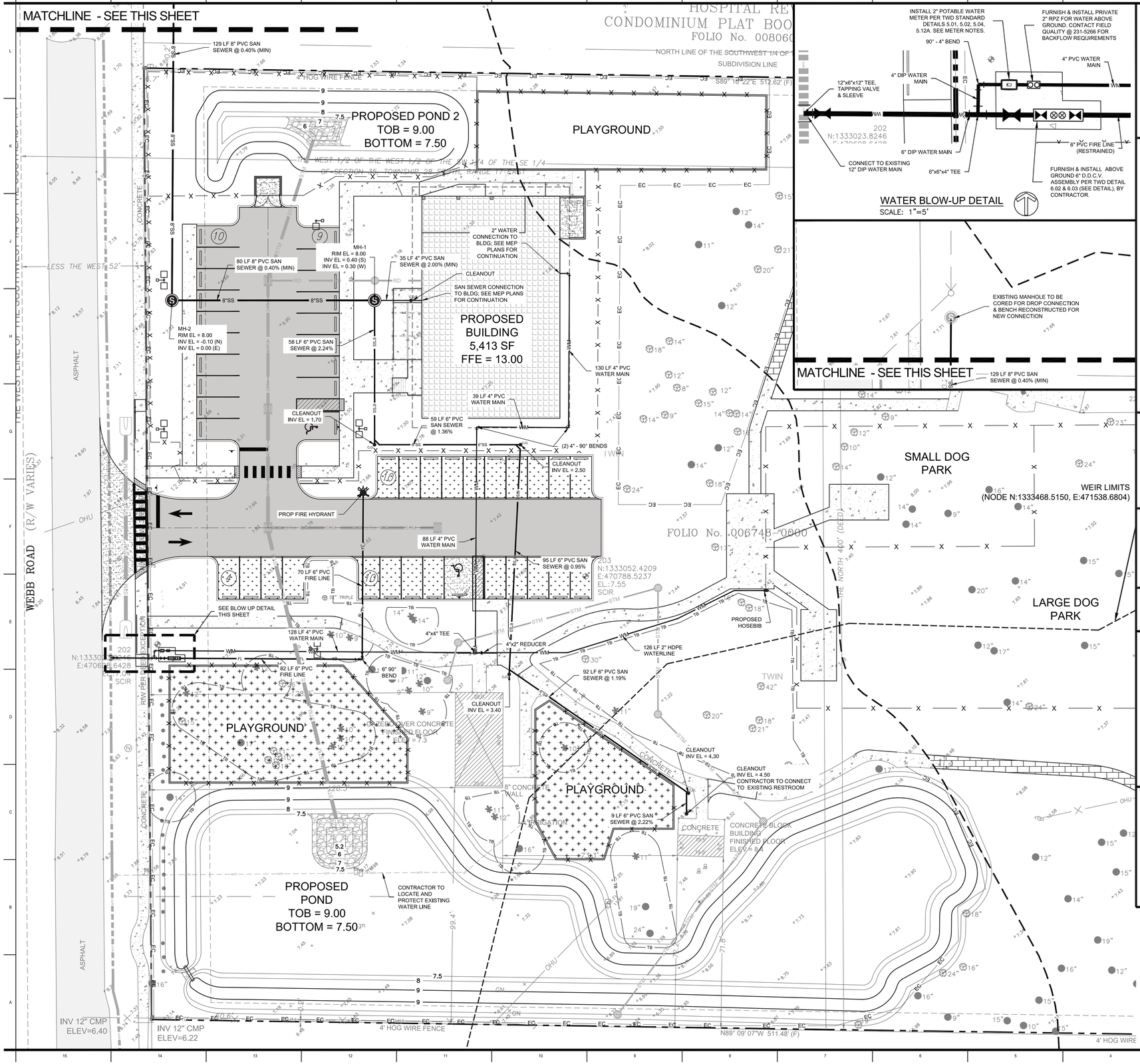

LEGEND

- PROPERTY LINE
- PROPOSED SILT FENCE
- PROPOSED FENCE
- PROPOSED BUILDING
- PROPOSED CONCRETE
- EXISTING ASPHALT PAVEMENT
- PROPOSED STORM PIPE
- PROPOSED FIRE MAIN
- PROPOSED WATER MAIN
- PROPOSED SANITARY SEWER
- PROPOSED POROUS CONCRETE
- PROPOSED GRASS PARKING

GENERAL NOTES

1. THE CONTRACTOR SHALL NOT OPERATE ANY VALVES OR PRESSURE TEST AGAINST ANY COUNTY INSTALLED VALVES OR FITTINGS.
2. GRASS AND MULCH, OR SOLID SOD, ALL AREAS IN EXISTING RIGHT-OF-WAY DISTURBED BY CONSTRUCTION.
3. CONTRACTOR IS TO COORDINATE ALL WORK WITHIN, BUT NOT LIMITED TO PUBLIC RIGHT-OF-WAY WITH UTILITY COMPANIES IN ORDER TO PREVENT DAMAGE TO UTILITY LINES AND THE MAKING OF ADJUSTMENTS TO SAME, IF REQUIRED.
4. CONTRACTOR SHALL CONTACT THE ENGINEER AND/OR THE OWNER PRIOR TO ANY CONSTRUCTION THAT MAY DAMAGE TREES.
5. FIRE HYDRANT, GATE VALVE AND BLOW-OFF VALVE ASSEMBLIES SHALL CONSIST OF ALL PIPE VALVES, TEE S, FITTINGS, AND ANY AND ALL OTHER APPURTENANCES COMPRISING A COMPLETE, WORKING UNIT.
6. CONTRACTOR SHALL PROVIDE ANY DEWATERING FOR UTILITY INSTALLATION IF REQUIRED.
7. ADJUSTING MANHOLE TOPS TO MATCH GRADE AND SLOPE OF THE FINISH PAVING SHALL BE INCLUDED IN THE RESPECTIVE CONTRACT UNIT PRICE FOR MANHOLES, PAYMENT OF WHICH WILL CONSTITUTE FULL COMPENSATION FOR THE CONSTRUCTION AND COMPLETION OF THE MANHOLE, AND NO ADDITIONAL PAYMENT WILL BE ALLOWED OR MADE FOR ADJUSTING MANHOLE TOPS.
8. BEND S SHALL BE INSTALLED IN WATER MAIN TO AVOID UNFORESEEN CONFLICTS IN EXISTING OR PROPOSED STRUCTURES.
9. THE JOINT DEFLECTION METHOD SHALL BE USED WHERE PRACTICAL IN LIEU OF INSTALLING BENDS.
10. CONTRACTOR SHALL VERIFY LOCATIONS AND DEPTHS OF EXISTING WATER AND SEWER LINES PRIOR TO BEGINNING CONSTRUCTION.
11. THE EXISTING UNDERGROUND UTILITY LINES SHOWN HEREON WERE TAKEN FROM DOCUMENTS FURNISHED BY OTHERS AND NOT FIELD VERIFIED, THEREFORE, THE ENGINEER CANNOT GUARANTEE THE ACCURACY OF SAME NOR ALL THAT ARE SHOWN. THE CONTRACTOR SHALL EXPOSE ALL UNDERGROUND UTILITY LINES IN COORDINATION WITH THE OWNERS TO HIS SATISFACTION AND MAKE ADJUSTMENTS TO SAME IN THE EVENT THERE ARE CONFLICTS WITH NEW CONSTRUCTION.
12. WHEN POTABLE WATER LINES PASS UNDERNEATH SEWER LINES, WATER LINES TO BE SLEEVED WITH SCHEDULE 80 PVC AND SEALED WITH WATERPROOF SEALANT WITHIN 5' OF SEWER CROSSINGS.

CONSTRUCTION NOTES

1. THE CONTRACTOR SHALL BE RESPONSIBLE FOR CONFIRMING THE EXTENTS OF PAVEMENT RESTORATION BASED ON HIS MEANS AND METHODS OF INSTALLING WATER, SEWER AND STORMWATER INFRASTRUCTURE ADJACENT TO OR UNDER EXISTING PAVEMENT AREAS. THE CONTRACTOR IS RESPONSIBLE FOR FOLLOWING LOCAL MUNICIPALITY AND STATE STANDARDS WHEN RESTORING PAVEMENT AND NOT SOLELY RELY ON CIVIL PLANS.
2. CONTRACTOR MUST VERIFY ALL EXISTING WATER, SEWER AND STORM WATER INFRASTRUCTURE WITHIN THE RIGHT OF WAY PRIOR TO ORDERING STRUCTURES. THE CONTRACTOR SHALL PROVIDE THE ENGINEER VERTICAL AND HORIZONTAL LOCATIONS OF INFRASTRUCTURE IN ORDER TO VERIFY ANY POTENTIAL CONFLICTS PRIOR TO ORDERING STRUCTURES.

EXISTING UTILITY LOCATION NOTES

1. BEFORE BEGINNING SITE WORK, THE CONTRACTOR IS REQUIRED TO FIELD VERIFY THE EXISTENCE AND LOCATION OF UNDERGROUND UTILITIES AND OTHER FEATURES. THE CONTRACTOR MAY CONSULT THE UTILITY OWNER'S RECORD DRAWINGS, BUT THE UTILITY OWNER AND THE ENGINEER DO NOT GUARANTEE , BY IMPLICATION OR OTHERWISE, THE ACCURACY OF THE THESE DRAWINGS. THE SITE CONTRACTOR SHALL BE FINANCIALLY RESPONSIBLE FOR ANY MODIFICATION REQUIRED, OTHER THAN SHOWN ON PLANS.
2. EXISTING WATER MAIN LOCATIONS SHOWN ARE APPROXIMATE.

FLOOD ZONE

THE SITE IS LOCATED WITHIN FLOOD ZONE "AE" (BASE FLOOD ELEVATION (BFE) OF 12.0' (NAVD88) PER FEMA FIRM COMMUNITY PANEL 12057C0327J, THAT HAS A PRELIMINARY EFFECTIVE DATE OF 10/26/2018. ALSO, THE COUNTY'S APPROVED SWMM MODEL INDICATES THE 100-YEAR FLOOD ELEVATION WITHIN THE VICINITY OF THIS SITE IS 7.64' FOR THE WEST SIDE AND 8.04' FOR THE EAST SIDE.

WATER SYSTEM TESTING REQUIREMENTS

(FOR PUBLIC WATER FACILITIES CONSTRUCTED FOR THE CITY)

1. ALL COMPONENTS OF THE WATER SYSTEM, INCLUDING FITTINGS, HYDRANTS, CONNECTIONS, AND VALVES SHALL BE PROPERLY PRESSURE TESTED AND ACCEPTED BY THE OWNER'S ENGINEER AND THE CITY. PRESSURE TESTS TO BE PERFORMED IN ACCORDANCE WITH WATER DEPARTMENT SPECIFICATIONS. CONTRACTOR TO NOTIFY OWNER'S ENGINEER AND THE ASSIGNED CITY INSPECTOR MINIMUM 3 WORKING DAYS IN ADVANCE OF PERFORMING TESTS.
2. CONTRACTOR SHALL PRESSURE TEST WATER MAINS AT 150 PSI FOR A PERIOD OF 2 HOURS IN ACCORDANCE WITH AWWA C600-87 STANDARDS.

   THE CONTRACTOR SHALL MAKE ALL NECESSARY APPLICATIONS AND ARRANGEMENTS.
3. CONTRACTOR TO PERFORM CHLORINATION AND COORDINATE BACTERIOLOGICAL SAMPLING WITH THE CITY OF TAMPA CONSTRUCTION INSPECTION SECTION IN ACCORDANCE WITH TAMPA WATER DEPARTMENT TECHNICAL MANUAL AND AWWA SPECIFICATION C651. CONTRACTOR TO OBTAIN SAMPLE CLEARANCE ON PUBLIC DOMESTIC WATER SYSTEM.
4. ALL TEST POINTS AND CHLORINATION POINTS PIPING SHALL BE COMPLETELY REMOVED PRIOR TO FINAL ACCEPTANCE. THE CORPORATION STOP SHALL BE REMOVED AND THE MAIN PLUGGED AFTER OPERATION (SEE CITY OF TAMPA STANDARD DETAIL 2.17).

FIRE LINE CL-5 NOTES

1. ALL FIRE LINE MATERIALS SHALL MEET NFPA-24 2010 EDITION.
2. PIPING SHALL BE DR-14 200 PSI BLUE PVC.
3. FITTINGS SHALL BE C153 COMPACT W/ 250 PSI RATING.
4. COMPLETE SYSTEM SHALL BE FULLY RESTRAINED (NO THRUST BLOCK).
5. SYSTEM MUST BE TESTED @ 200 PSI MIN. WITH NO LOSS OF PRESSURE FOR A MIN. OF 2 HOURS.
6. BEFORE CERTIFICATION CAN BE PROVIDED, THE COMPLETE SYSTEM MUST BE FLUSHED IN THE PRESENCE OF THE FIRE INSPECTOR.
7. BEFORE BACKFILL OF THE PIPE TRENCH, MAGNETIC LOCATOR TAPE MUST BE PLACED 2'-0" FROM THE TOP OF PVC PIPE.

WILDERARCHITECTURE, INC.
1315 E. SEVENTH AVENUE
SUITE 106
TAMPA, FLORIDA 33605.3607
TELEPHONE 813.242.6677
FACSIMILE 813.242.6683
wilderarchitecture.com
AA26000655

LAUREN DECKER CAMPO
LICENSE
No. 57421
STATE OF FLORIDA
PROFESSIONAL ENGINEER
Lauren D. Campo P.E. # 57421 09/16/2020

CEI
CIVIL ENGINEERS CONSTRUCTION MANAGERS PLANNERS
CAMPO ENGINEERING, INC.
FBPR REGISTRY NO.: 26726
1725 EAST 5TH AVENUE
TAMPA, FL. 33605
PHONE: (813) 215-7372
FAX: (813) 902-8782

HILLSBOROUGH COUNTY BOARD
OF COUNTY COMMISSIONERS
COUNTY CENTER
601 E KENNEDY BLVD
TAMPA, FL 33601

HILLSBOROUGH COUNTY
NORTHWEST AREA HEAD START

PROJECT #: 2010-00

DISTRIBUTION	DATE
90% CONST DOCS	08.19.2020

UTILITY PLAN

C-7

G:\Projects\19-026 - HC Church Park Improvements\Drawings\Design & Construction\19-026 - Utility Plan.dwg - Printed Sep 16, 2020-1:25pm by: GageS

2.05 — POLYETHYLENE ENCASEMENT INSTALLATION DETAIL

METHOD A

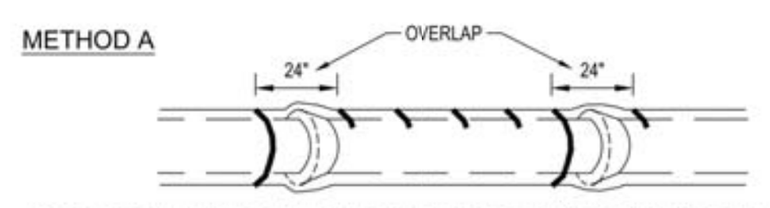

POLYETHYLENE TUBE IS CUT INTO LENGTHS APPROXIMATELY TWO FEET LONGER THAN THE PIPE SECTION AND PLACED AROUND IT. AFTER THE PIPE JOINT IS ASSEMBLED, THE POLYETHYLENE TUBE IS MADE TO OVERLAP THE JOINT AND THE OVERLAP SECURED IN PLACE. SINCE THE TUBE IS CONSIDERABLY LARGER THAN THE BARREL OF PIPE, IT IS MADE TO FIT SNUGLY BY FOLDING OVER AT THE TOP AND SECURING WITH TAPE EVERY 24" ALONG THE PIPE SECTION.

METHOD B

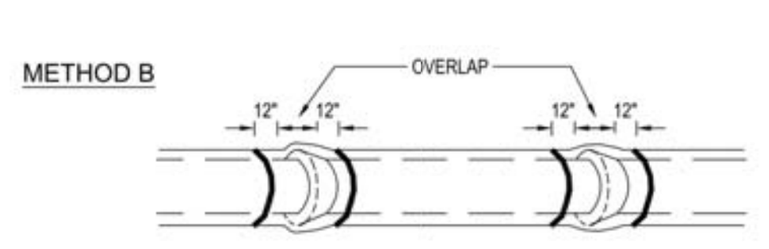

POLYETHYLENE TUBE IS CUT ONE FOOT SHORTER THAN THE LENGTH OF THE PIPE SECTION. AFTER PLACEMENT OF THE PIPE, IT IS FOLDED AND SECURED SNUGLY OVERALL. A THREE FOOT LENGTH OF POLYETHYLENE TUBE PLACED OVER THE END OF THE PRECEEDING SECTION IS THEN PULLED IN PLACE OVER THE JOINT AFTER ASSEMBLY AND SECURED.

METHOD C

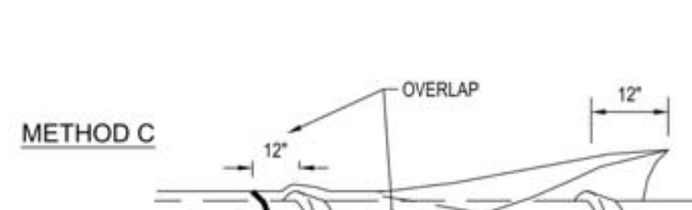

POLYETHYLENE SHEET IS CUT TO A LENGTH TWO FEET LONGER THAN THE PIPE SECTION. THE SHEET IS WRAPPED AROUND THE PIPE SO THAT IT OVERLAPS CIRCUMFERENTIALLY OVER THE TOP QUADRANT OF THE PIPE, THEN SECURED. AFTER JOINT ASSEMBLY, THE SURPLUS LENGTH OF POLYETHYLENE FILM IS SECURED AROUND THE JOINT, PROVIDING AN OVERLAP OF EACH JOINT. TAPE AT EACH JOINT AND AT 3' INTERVALS IN BETWEEN.

NOTES:

1. USE BLUE POLYETHYLENE FILM AND TAPE ONLY.
2. POLYETHYLENE FILM SHALL BE A MINIMUM OF 8 MIL. THICKNESS.
3. SPIRAL WRAP NOT REQUIRED WITH POLYWRAP.

City of Tampa Florida Water Department	LAST REVISION JUL 2018	POLYETHYLENE ENCASEMENT INSTALLATION DETAIL	2.05

2.11 — RESTRAINED JOINT STANDARD FOR BENDS, PLUGS, CAPS, AND VALVES

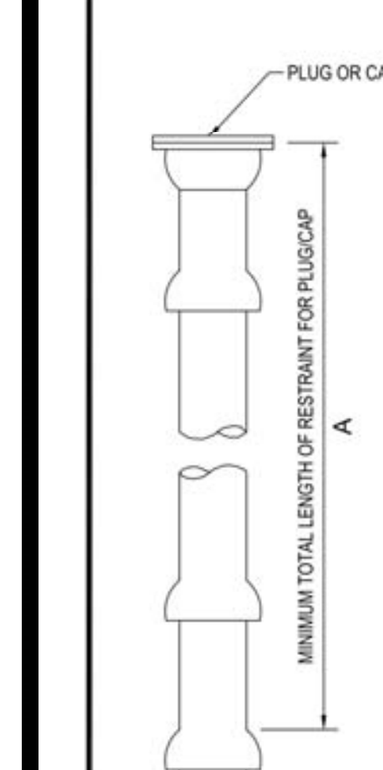

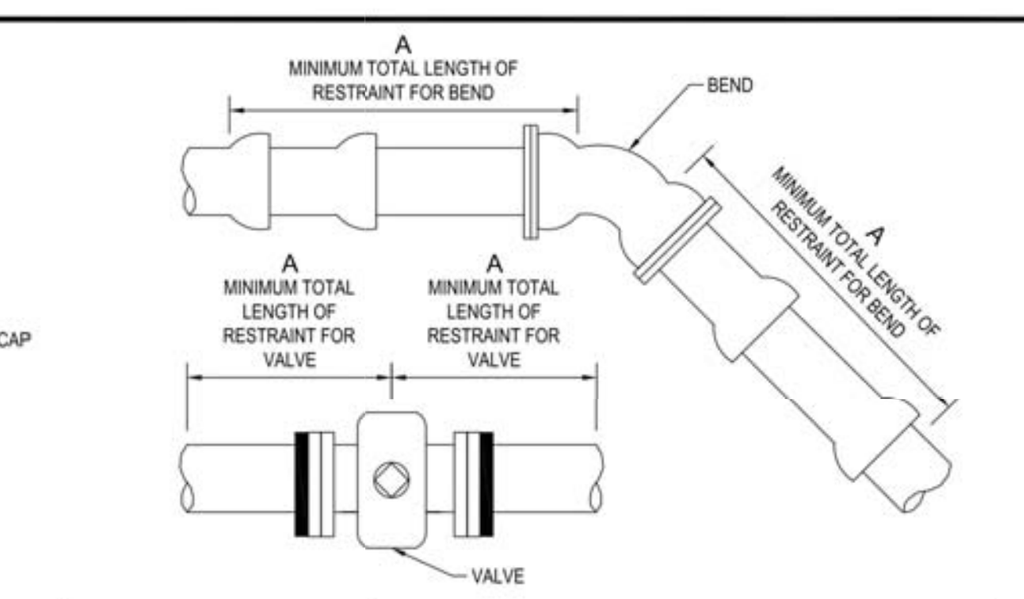

RESTRAIN "A" (LF)

FITTING / PIPE	4"	6"	8"	12"	16"	20"	24"	30"	36"
11-1/4°	4	5	8	10	11	13	15	19	21
22-1/2°	8	11	15	20	21	26	31	38	44
45°/OFFSET	16	23	30	43	45	55	65	78	91
90°	39	55	73	103	109	133	156	189	220
PLUG/CAP/VALVE*	69	98	128	179	179	218	255	306	356

A = MINIMUM FOOTAGE OF PIPE TO BE RESTRAINED

* = FOR IN-LINE VALVE, RESTRAINT LENGTH "A" REQUIRED BOTH WAYS FROM VALVE

NOTES:

1. THIS TABLE IS BASED ON:
   a. MAXIMUM TEST PRESSURE OF 190 PSI
   b. LAYING CONDITION TYPE 2 (SEE DETAILS 2.01 AND 2.02)
   c. POOR SOIL CONDITIONS
   d. USING D.I.P.
   e. 3 FEET OF COVER FOR 12" AND SMALLER MAINS; 4 FEET OF COVER FOR 16" AND LARGER MAINS
   f. HORIZONTAL BENDS ONLY - ENGINEER TO SUBMIT CALCULATIONS FOR VERTICAL RESTRAINTS
2. "RESTRAINED" PIPE SHALL BE MANUFACTURED RESTRAINED JOINT PIPE, PUSH-ON JOINT PIPE RESTRAINED W/GASKET-TYPE "GRIPPER RESTRAINTS", OR MECHANICAL JOINT PIPE RESTRAINED BY MEGALUG (OR APPROVED EQUIVALENT).
3. ANY ADDITIONAL FITTINGS WITHIN THE RESTRAINED SECTION SHALL BE RESTRAINED ACCORDINGLY.

City of Tampa Florida Water Department	LAST REVISION JUL 2018	RESTRAINED JOINT STANDARD FOR BENDS, PLUGS, CAPS, AND VALVES	2.11

2.12A — RESTRAINED JOINT STANDARD FOR TEES AND REDUCERS

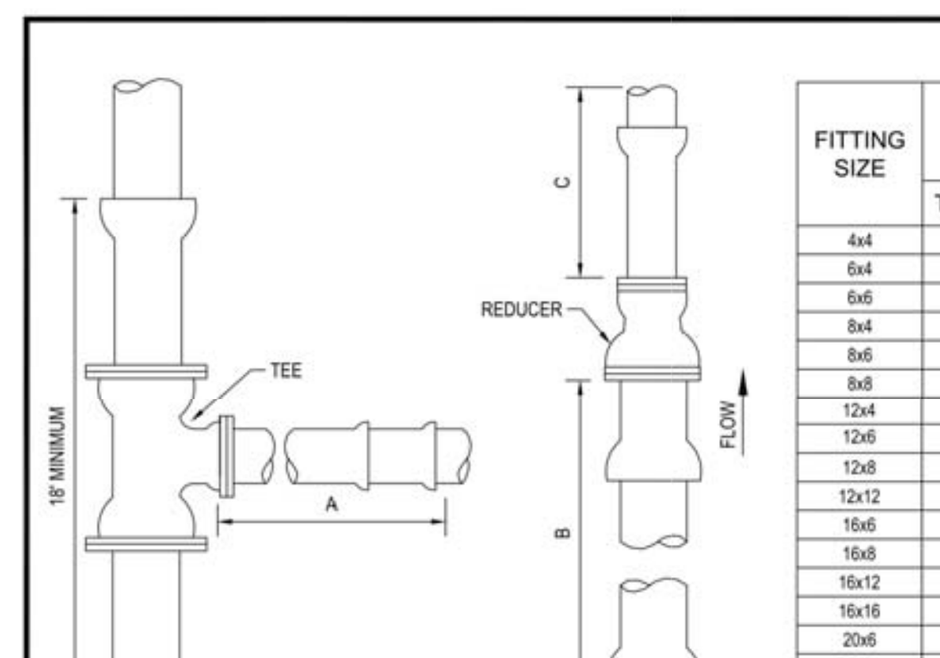

FITTING SIZE	RESTRAIN (LF) TEE "A"	RESTRAIN (LF) REDUCER "B"	UNRESTRAINED STRAIGHT RUN (LF) REDUCER "C"
4x4	31	*	*
6x4	14	50	74
6x6	60	*	*
8x4	A.T.	91	178
8x6	48	54	70
8x8	90	*	*
12x4	A.T.	155	455
12x6	24	130	260
12x8	71	95	144
12x12	143	*	*
16x6	A.T.	151	401
16x8	34	130	265
16x12	96	76	103
16x16	148	*	*
20x6	A.T.	195	659
20x8	18	180	461
20x12	85	136	233
20x16	139	76	96
20x20	186	*	*
24x6	A.T.	236	971
24x8	A.T.	224	700
24x12	74	188	391
24x16	130	139	215
24x20	180	76	93
24x24	224	*	*
30x6	A.T.	293	1534
30x8	A.T.	283	1130
30x12	56	255	678
30x16	118	216	426
30x20	169	168	260
30x24	215	108	138
30x30	275	*	*
36x6	A.T.	345	2230
36x8	A.T.	336	1660
36x12	38	314	1030
36x16	104	283	689
36x20	159	244	466
36x24	206	195	306
36x30	269	108	133
36x36	326	*	*

A.T. = RESTRAINT REQUIRED AT TEE ONLY. * = NOT APPLICABLE

NOTES:

1. THIS TABLE IS BASED ON:
   a. MAXIMUM TEST PRESSURE OF 190 PSI
   b. LAYING CONDITION TYPE 2 (SEE DETAILS 2.01 AND 2.02)
   c. POOR SOIL CONDITIONS
   d. USING D.I.P.
   e. 3 FEET OF COVER FOR 12" AND SMALLER MAINS; 4 FEET OF COVER FOR 16" AND LARGER MAINS
   f. HORIZONTAL BENDS ONLY - ENGINEER TO SUBMIT CALCULATIONS FOR VERTICAL RESTRAINTS
2. RESTRAINT FOR REDUCERS: IF "C" STRAIGHT RUN OF PIPE DOWNSTREAM OF REDUCER NOT AVAILABLE, THE RESTRAIN "B" UPSTREAM OF REDUCER.
3. "RESTRAINED" PIPE SHALL BE MANUFACTURED RESTRAINED JOINT PIPE, PUSH-ON JOINT PIPE RESTRAINED W/GASKET-TYPE "GRIPPER RESTRAINTS", OR MECHANICAL JOINT PIPE RESTRAINED BY MEGALUG (OR APPROVED EQUIVALENT).
4. ANY ADDITIONAL FITTINGS WITHIN THE RESTRAINED SECTION SHALL BE RESTRAINED ACCORDINGLY.

City of Tampa Florida Water Department	LAST REVISION JUL 2018	RESTRAINED JOINT STANDARD FOR TEES AND REDUCERS	2.12A

2.18A — TEMPORARY SAMPLE TAP INSTALLATION W/DI, CI, OR PVC PIPE

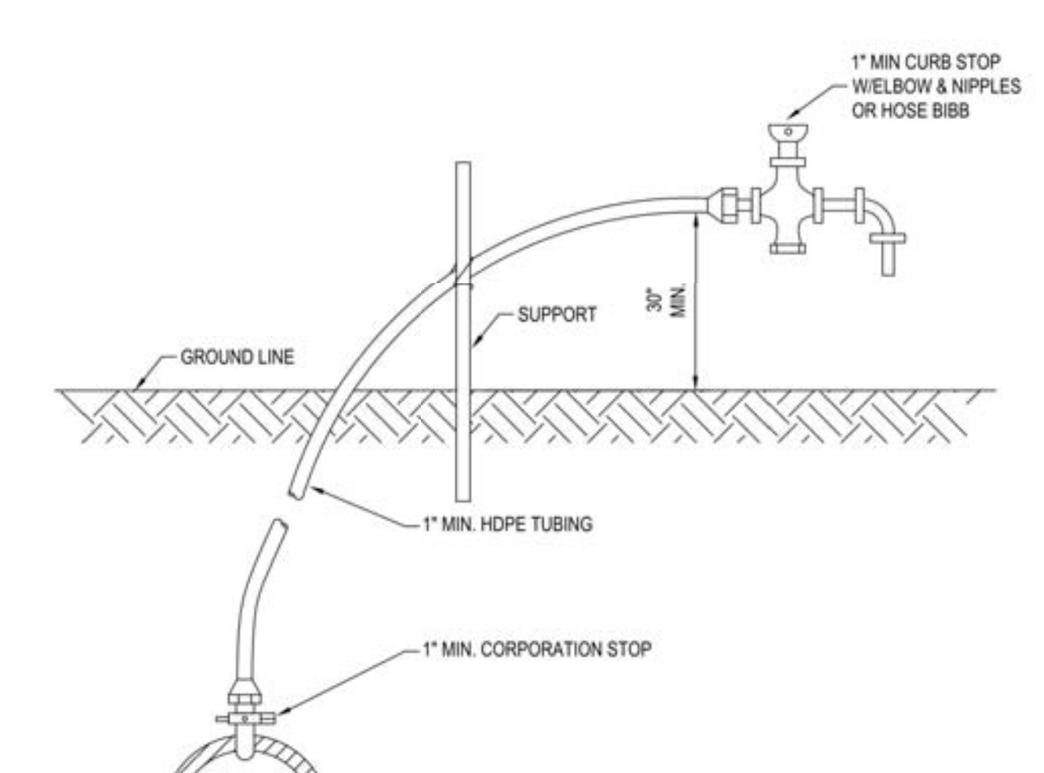

NOTES:

1. WATER OUTLET SHALL BE HELD UP OFF THE GROUND SO AS NOT TO INTERFERE WITH THE SAMPLING PROCESS.
2. CORPORATION STOP TO BE REMOVED AND BRASS PLUG INSTALLED IN TAPPED MAIN AFTER OPERATION.

City of Tampa Florida Water Department	LAST REVISION JUL 2018	TEMPORARY SAMPLE TAP INSTALLATION W/DI, CI, OR PVC PIPE	2.18A

3.01 — VALVE INSTALLATION W/VALVE BOX & PAD FOR DI OR CI PIPE

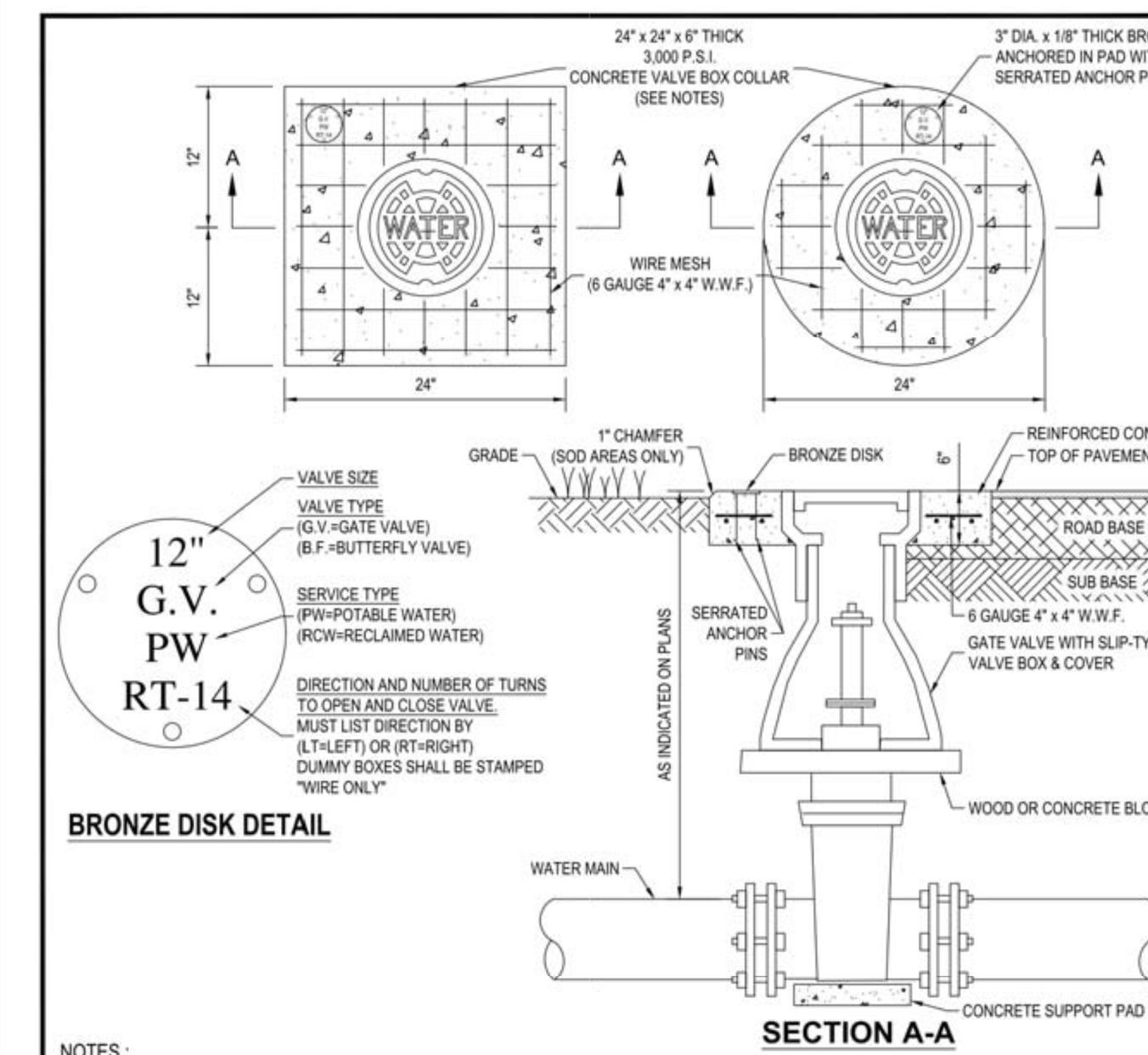

NOTES :

1. CIRCULAR OR SQUARE CONCRETE PAD REQUIRED FOR ALL VALVE BOX INSTALLATIONS.
2. CAST IRON VALVE BOXES SHALL BE FIRMLY SUPPORTED AND CENTERED AND PLUMB OVER THE OPERATING NUT OF THE VALVE. VALVE BOX COVER SHALL BE FLUSH WITH THE SURFACE OF THE FINISHED PAVEMENT, OR GRADE OR AT SUCH OTHER LEVEL AS MAY BE DIRECTED BY THE DEPARTMENT.
3. "BLUE" WATER VALVE LOCATE MARKERS REQUIRED FOR ALL VALVE INSTALLATIONS.
4. EMBED BRONZE VALVE INFO DISK INTO CONCRETE VALVE BOX COLLAR.
5. ALL MATERIALS SHALL BE IN ACCORDANCE WITH THE LATEST T.W.D. APPROVED MATERIAL SPECIFICATIONS.
6. IF VALVE IS LOCATED WITHIN A SIDEWALK CONCRETE COLLAR MAY BE ELIMINATED AND DISK SET FLUSH DIRECTLY IN SIDEWALK.
7. BRONZE DISK REQUIRED FOR ALL VALVES AND DUMMY BOXES.

City of Tampa Florida Water Department	LAST REVISION JUL 2018	VALVE INSTALLATION W/VALVE BOX & PAD FOR DI OR CI PIPE	3.01

3.02 — VALVE INSTALLATION W/VALVE BOX & PAD FOR PLASTIC PIPE WITH DOUBLE COPPER TRACER WIRE ON PIPE

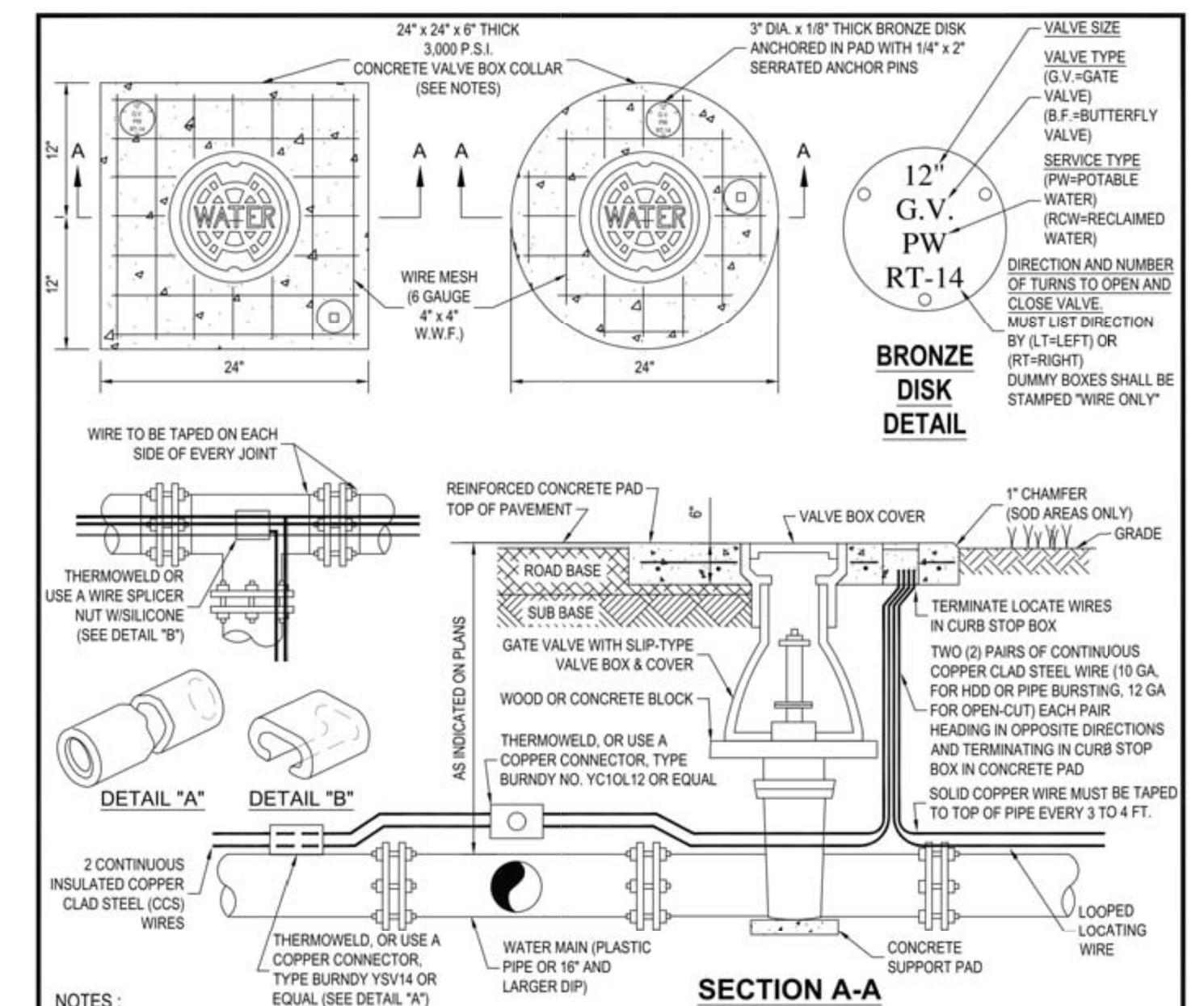

NOTES :

1. CIRCULAR OR SQUARE CONCRETE PAD REQUIRED FOR ALL VALVE BOX INSTALLATIONS.
2. CAST IRON VALVE BOXES SHALL BE FIRMLY SUPPORTED AND CENTERED AND PLUMB OVER THE OPERATING NUT OF THE VALVE. VALVE BOX COVER SHALL BE FLUSH WITH THE SURFACE OF THE FINISHED PAVEMENT, OR GRADE OR AT SUCH OTHER LEVEL AS MAY BE DIRECTED BY THE DEPARTMENT.
3. "BLUE" WATER VALVE LOCATE MARKERS REQUIRED FOR ALL VALVE INSTALLATIONS.
4. EMBED BRONZE VALVE INFO DISK INTO CONCRETE VALVE BOX COLLAR.
5. ALL MATERIALS SHALL BE IN ACCORDANCE WITH THE LATEST T.W.D. APPROVED MATERIAL SPECIFICATIONS.
6. IF VALVE IS LOCATED WITHIN A SIDEWALK CONCRETE COLLAR MAY BE ELIMINATED AND DISK SET FLUSH DIRECTLY IN SIDEWALK.
7. BRONZE DISK REQUIRED FOR ALL VALVES AND DUMMY BOXES.
8. ALL CONNECTIONS SHALL BE SEALED WITH A BITUMINOUS COATING FOR CORROSION PROTECTION.

City of Tampa Florida Water Department	LAST REVISION JUL 2018	VALVE INSTALLATION W/VALVE BOX & PAD FOR PLASTIC PIPE WITH DOUBLE COPPER TRACER WIRE ON PIPE	3.02

5.01A — TAPPING DETAIL

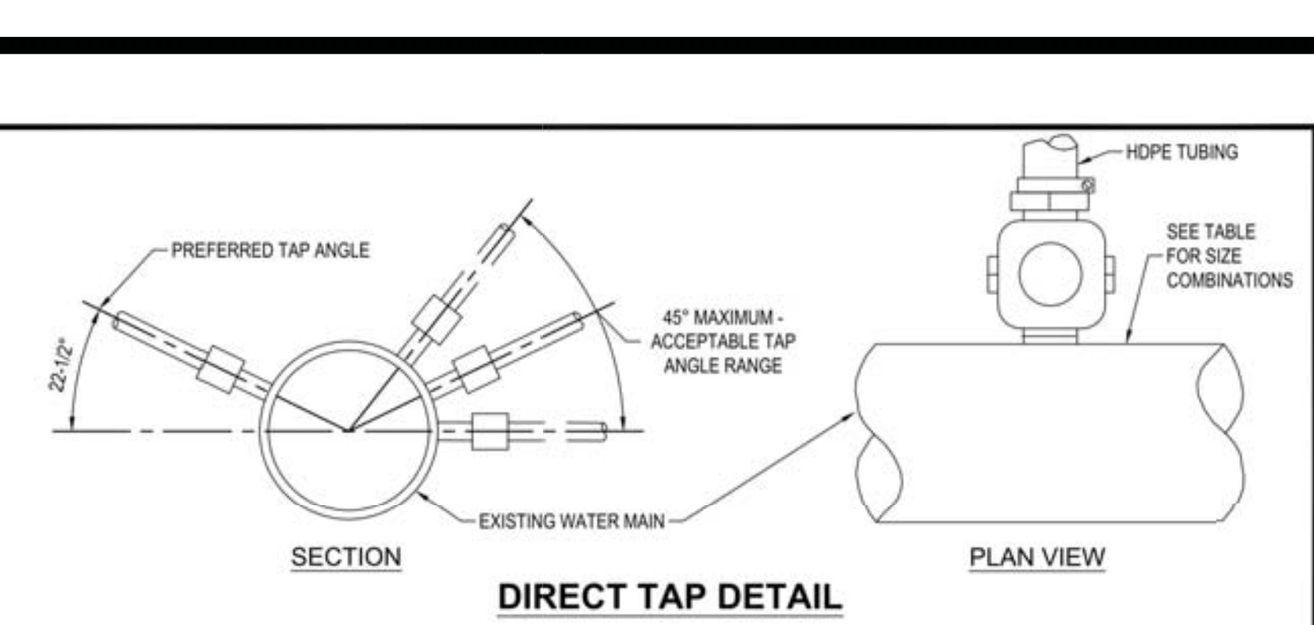

DIRECT TAP DETAIL

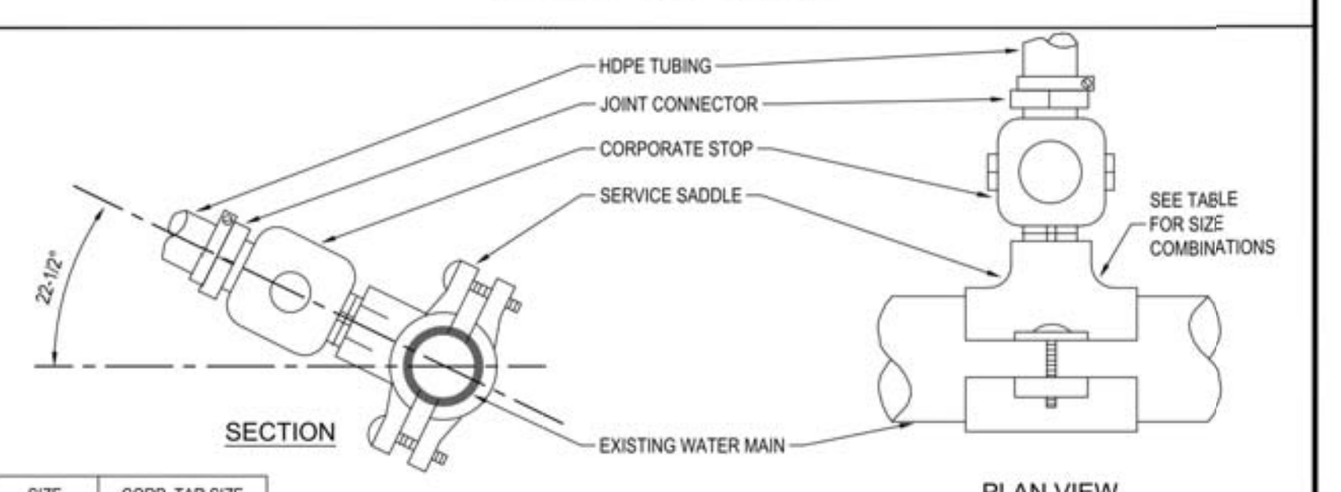

SADDLE TAP DETAIL

PIPE	SIZE	CORP. TAP SIZE 1"	CORP. TAP SIZE 2"
DI/CI	12"	DT	DT
	8"	DT	SS
	6"	DT	SS
	4"	SS	SS
PVC	2", 2-1/2"	SS	NA
	8", C-900	SS	SS
	6", C-900	SS	SS
	2"-SDR21	SS	NA
OTHER*	12"	SS	SS
	10"	SS	SS
	8"	SS	SS
	6"	SS	SS
	4"	SS	NA
	3"	SS	NA
	2", 2-1/2"	SS	NA

LEGEND
DT- DIRECT TAP CAN BE ALLOWED SS- SERVICE SADDLE IS REQUIRED NA- NOT ALLOWED
*ASBESTOS CEMENT, STEEL, GALVANIZED IRON PIPE, NON STD PVC, ETC.

City of Tampa Florida Water Department	LAST REVISION JUL 2018	TAPPING DETAIL FOR 3/4", 1", 1-1/2" & 2" W/DI, CI, OR PVC PIPE	5.01A

5.02 — SINGLE METER SET DETAIL

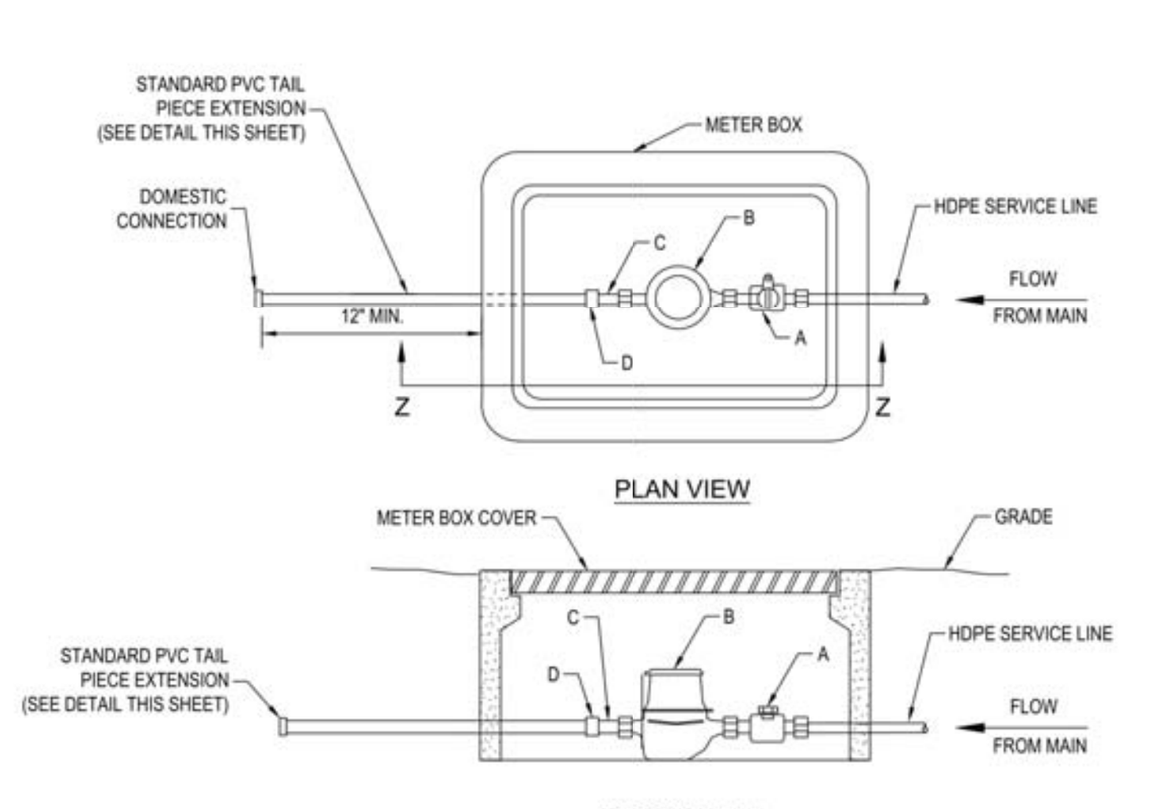

METER INSTALLATION PARTS LIST

ITEM	DESCRIPTION
A	HDPE CJ X METER, SWIVEL NUT (CURB STOP)
B	METER
C	BRASS METER COUPLING
D	*PVC FIP X WELD COUPLING

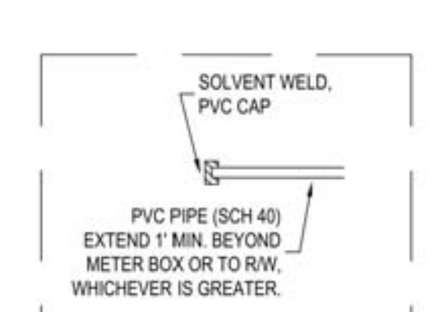

STD. TAIL PIECE EXTENSION

* ALL PVC PIPE AND FITTINGS SHALL BE SCH 80 EXCEPT FOR STANDARD TAIL PIECE SECTION WHICH WILL BE SCH 40.

NOTE: PARTS LIST IS FOR STANDARD INSTALLATION; ACTUAL PARTS REQUIRED MAY VARY AS DIRECTED BY THE ENGINEER.

City of Tampa Florida Water Department	LAST REVISION JUL 2018	SINGLE METER SET DETAIL 3/4", 1", 1-1/2", 2"	5.02

5.04A — SINGLE & DUAL METERED SERVICE - SHORT SIDE

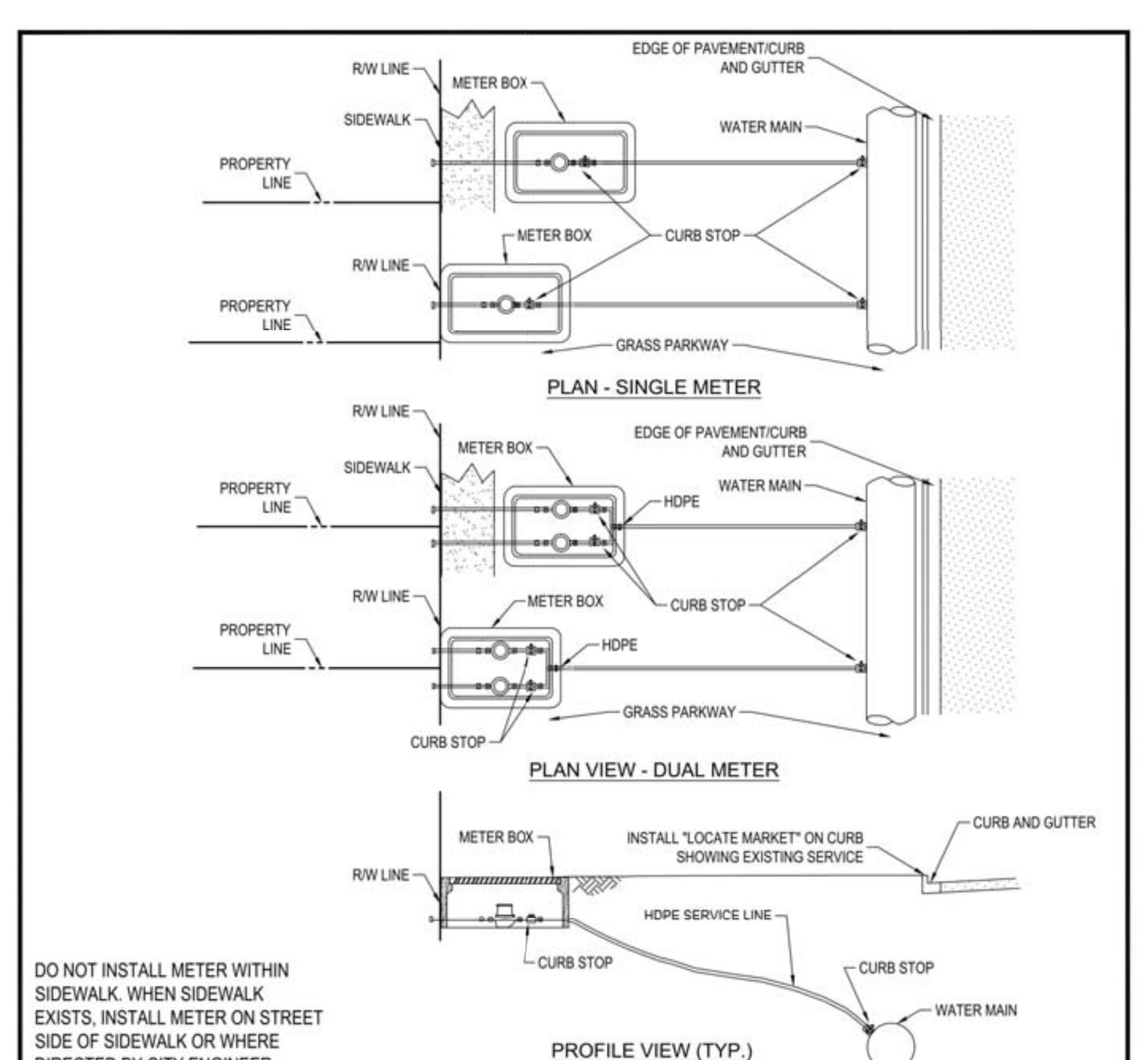

DO NOT INSTALL METER WITHIN SIDEWALK. WHEN SIDEWALK EXISTS, INSTALL METER ON STREET SIDE OF SIDEWALK OR WHERE DIRECTED BY CITY ENGINEER.

* LINE SIZE APPLICABLE FOR DDCVA

SINGLE METER SIZE (INCHES)	SERVICE LINE SIZE (INCHES) (0-15')	DUAL METER SIZE (INCHES)	SERVICE LINE SIZE (INCHES) (0-15')
3/4	1	3/4	2
1	1	1	2
1 1/2	2	1 1/2	N/A
2"	2	2"	N/A

(FEET REFER TO DISTANCE FROM WATER MAIN TO METER)

City of Tampa Florida Water Department	LAST REVISION JUL 2018	SINGLE & DUAL METERED SERVICE - SHORT SIDE 3/4", 1", 1-1/2" & 2"	5.04A

5.10 — 3/4" OR 1" SINGLE SERVICE HDPE METER BOX

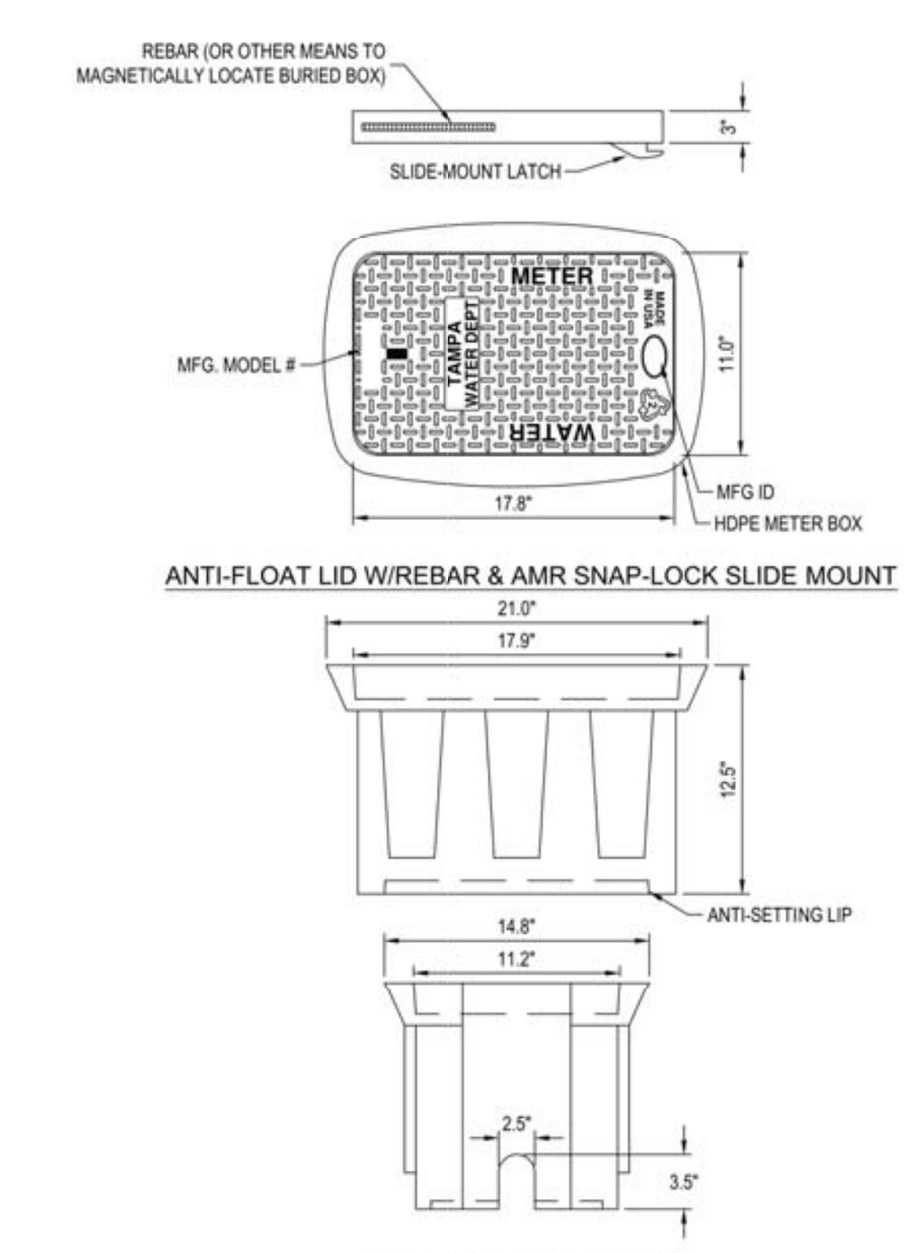

#37 HDPE METER BOX W/COVER

N.T.S.

City of Tampa Florida Water Department	LAST REVISION JUL 2018	3/4" OR 1" SINGLE SERVICE HDPE METER BOX	5.10

REDUCED PRESURE BACK-FLOW PREVENTOR ASSEMBLY DETAIL

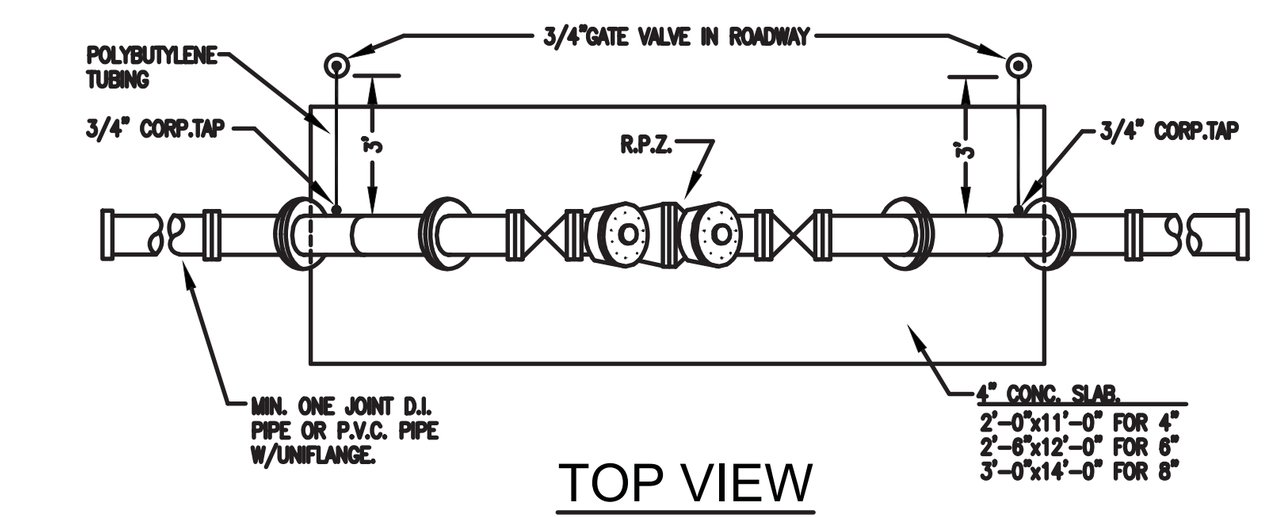

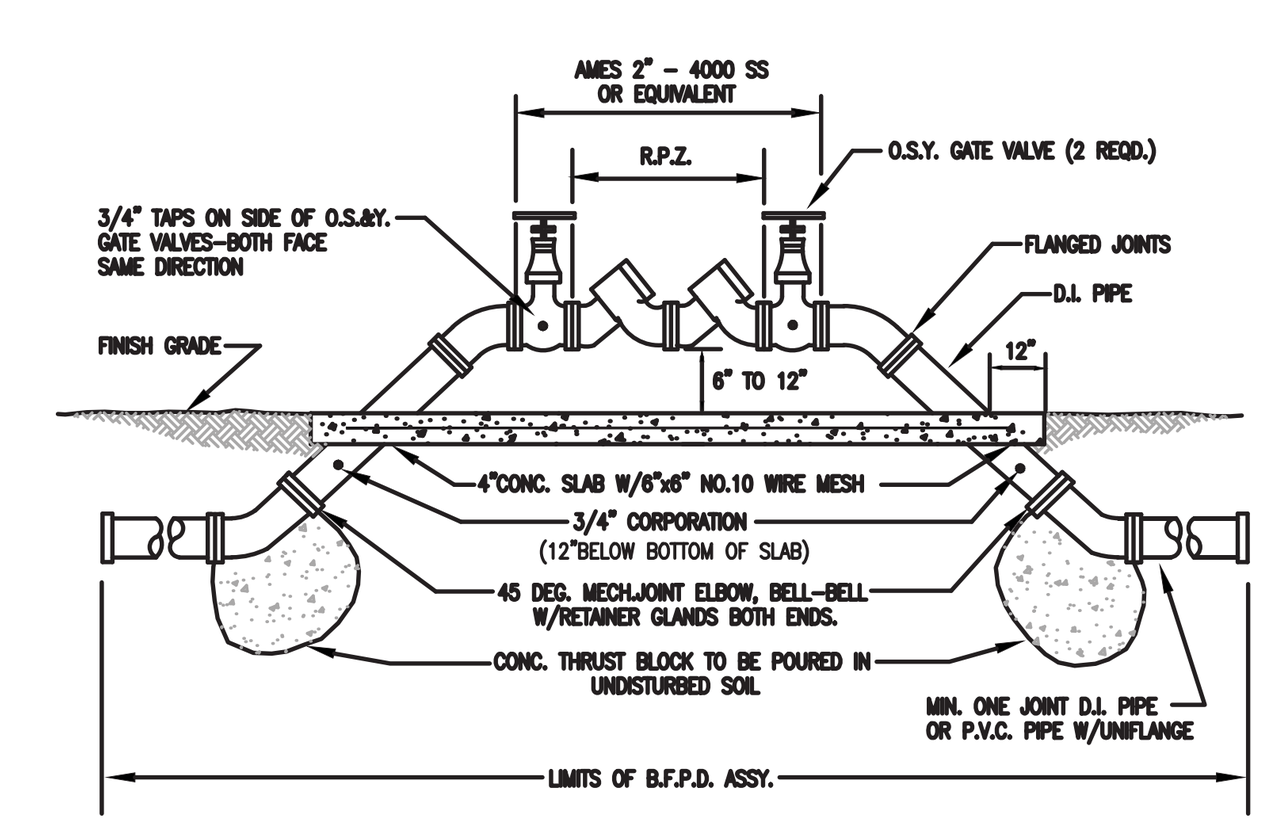

NOTE: DEVICE MUST BE INSTALLED LEVEL PAINT WITH TWO COATS OF BLUE PAINT. ALL BELOW GROUND D.I. PIPE AND FITTINGS SHALL BE POLYETHYLENE WRAPPED. RESTRAIN PER CITY OF TAMPA SPECIFICATIONS.

REDUCED PRESURE BACK-FLOW PREVENTOR ASSEMBLY DETAIL

2.02 — TRENCHING, BEDDING, AND BACKFILL DETAIL FOR PERVIOUS (NON-PAVED) AREAS

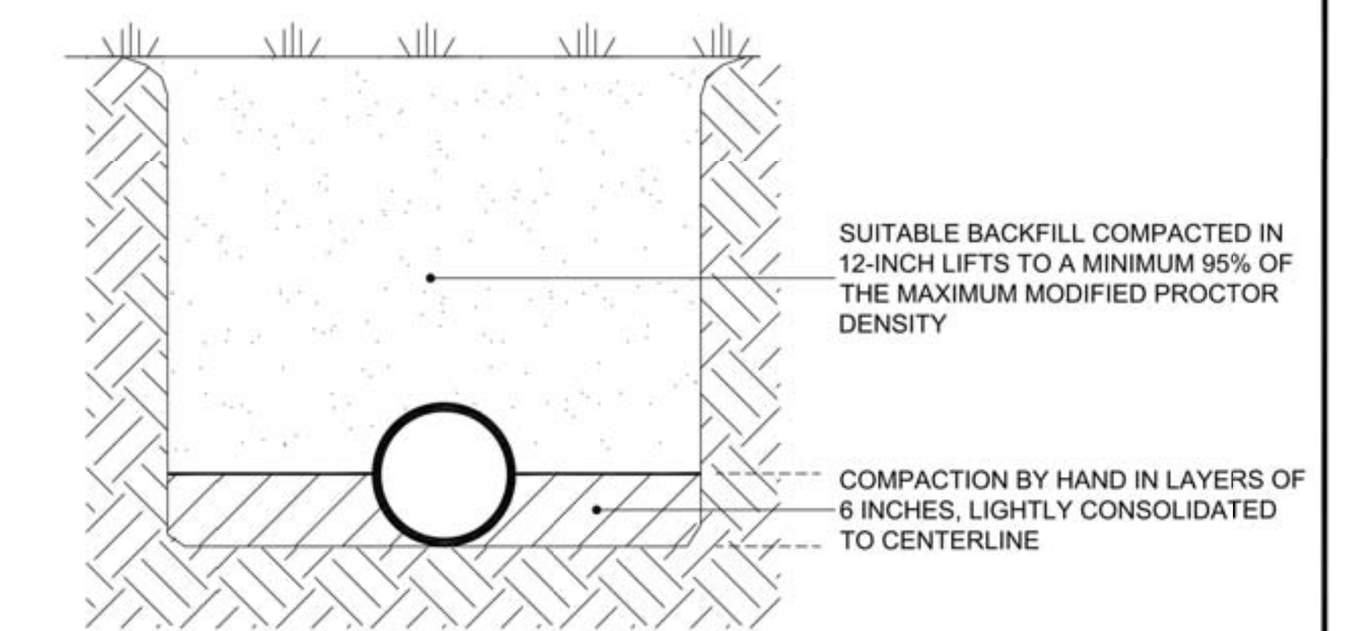

NOTES:

1. TYPE 2 TRENCH IS DEFINED AS A FLAT-BOTTOM TRENCH. LIGHTLY CONSOLIDATE BACKFILL TO CENTERLINE OF PIPE.
2. THIS STANDARD SHALL BE UTILIZED IN THE ABSENCE OF SPECIFIC STANDARDS. THE STANDARD OF THE AGENCY CONTROLLING THE RIGHT-OF-WAY SHALL GOVERN UNLESS OTHERWISE DIRECTED BY CITY ENGINEER.
3. SUITABLE BACKFILL SHALL BE DEFINED AS MATERIAL FREE FROM CINDERS, ASHES, REFUSE, CLAY, ORGANIC MATTER, BOULDERS, ROCKS OR STONES, OR OTHER MATERIAL THAT IN THE OPINION OF THE CITY ENGINEER IS UNSUITABLE.
4. NON-PAVED AREA IS A PERVIOUS AREA. IF ANY PART OF THE TRENCH IS WITHIN A CONCRETE OR ASPHALT CURB, SIDEWALK, DRIVEWAY, OR ROADWAY, THEN STANDARD DETAIL 2.01 APPLIES.

City of Tampa Florida Water Department	LAST REVISION JUL 2018	TRENCHING, BEDDING, AND BACKFILL DETAIL FOR PERVIOUS (NON-PAVED) AREAS	2.02

3.04 — VALVE BOX, SLIP TYPE

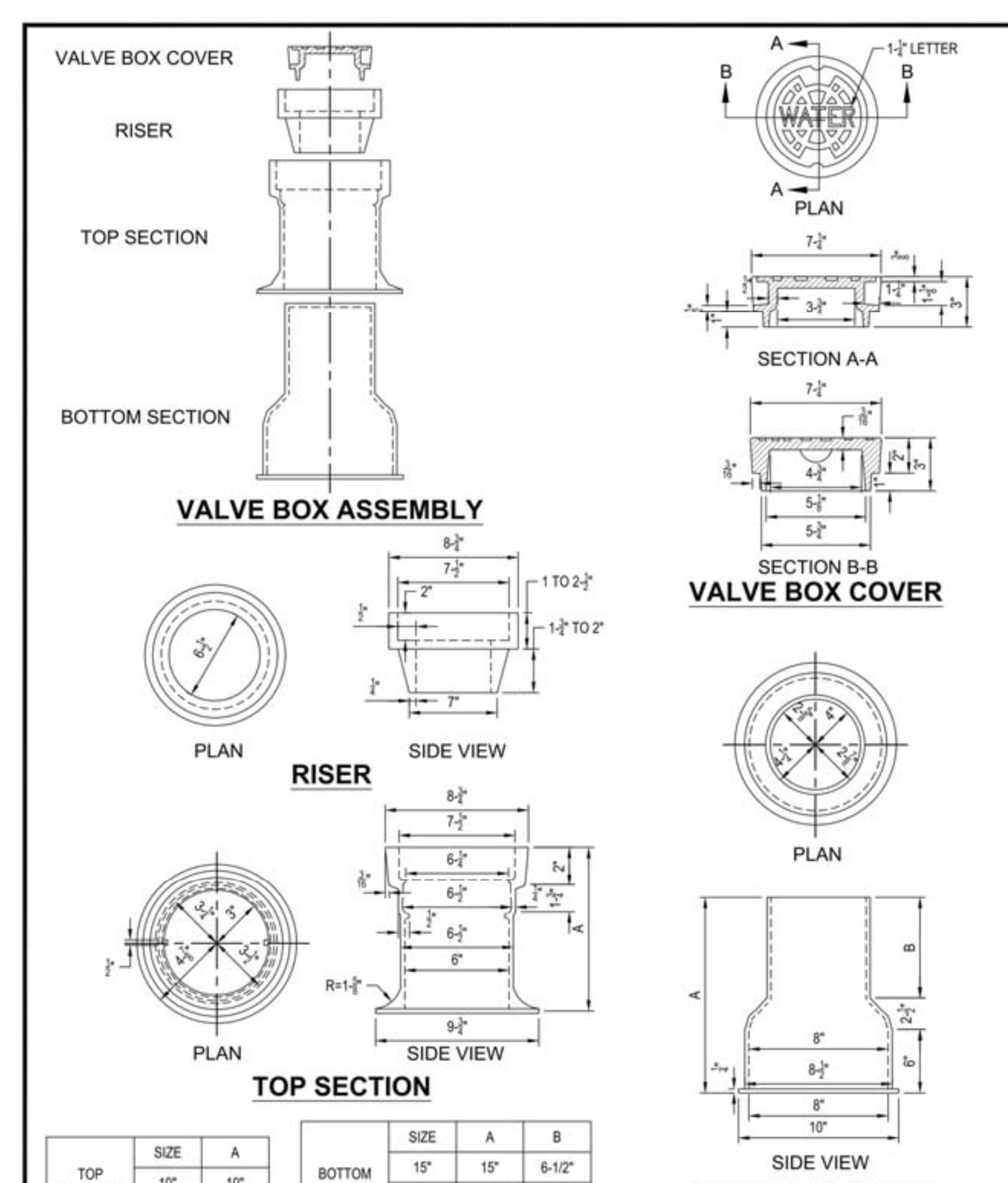

TOP SECTION SIZE	A
10"	10"
16"	16"

BOTTOM SECTION SIZE	A	B
15"	15"	6-1/2"
24"	24"	15-1/2"
36"	36"	27-1/2"

City of Tampa Florida Water Department	LAST REVISION JUL 2018	VALVE BOX, SLIP TYPE	3.04

3.06 — CONCRETE VALVE BOX COLLAR DETAIL

NOTE

1. ALL MATERIALS SHALL BE IN ACCORDANCE WITH THE LATEST T.W.D. APPROVED MATERIAL SPECIFICATIONS.
2. IF VALVE IS LOCATED WITHIN A SIDEWALK CONCRETE COLLAR MAY BE ELIMINATED AND DISK SET FLUSH DIRECTLY IN SIDEWALK.
3. BRONZE DISK REQUIRED: FOR ALL VALVES, AND DUMMY BOXES.

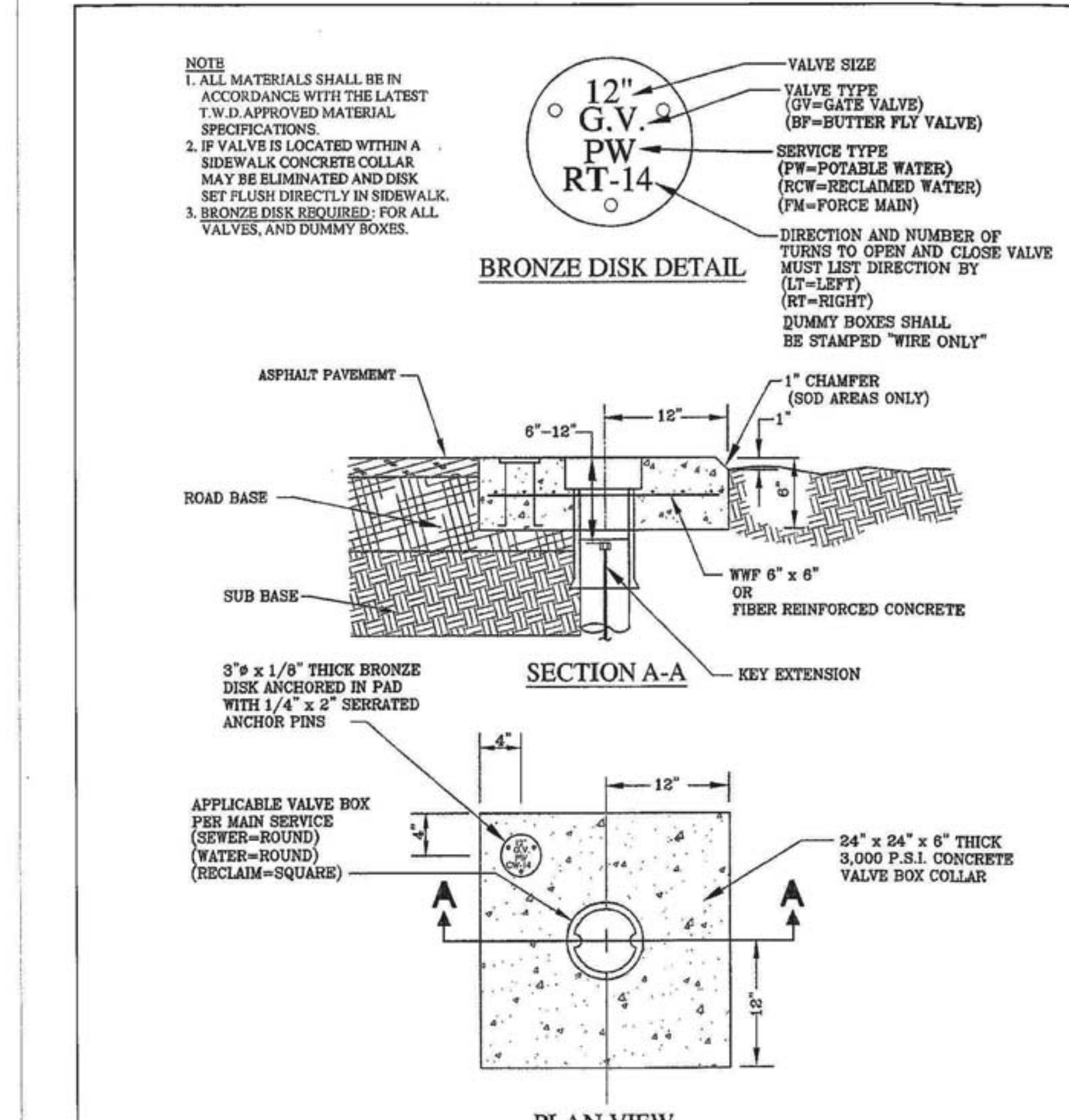

TAMPA WATER DEPARTMENT	APPROVED JULY 2015	REVISED	CONCRETE VALVE BOX COLLAR DETAIL	3.06

2.01A — TRENCHING, BEDDING AND BACKFILL DETAIL FOR NON-PERVIOUS (PAVED) AREAS

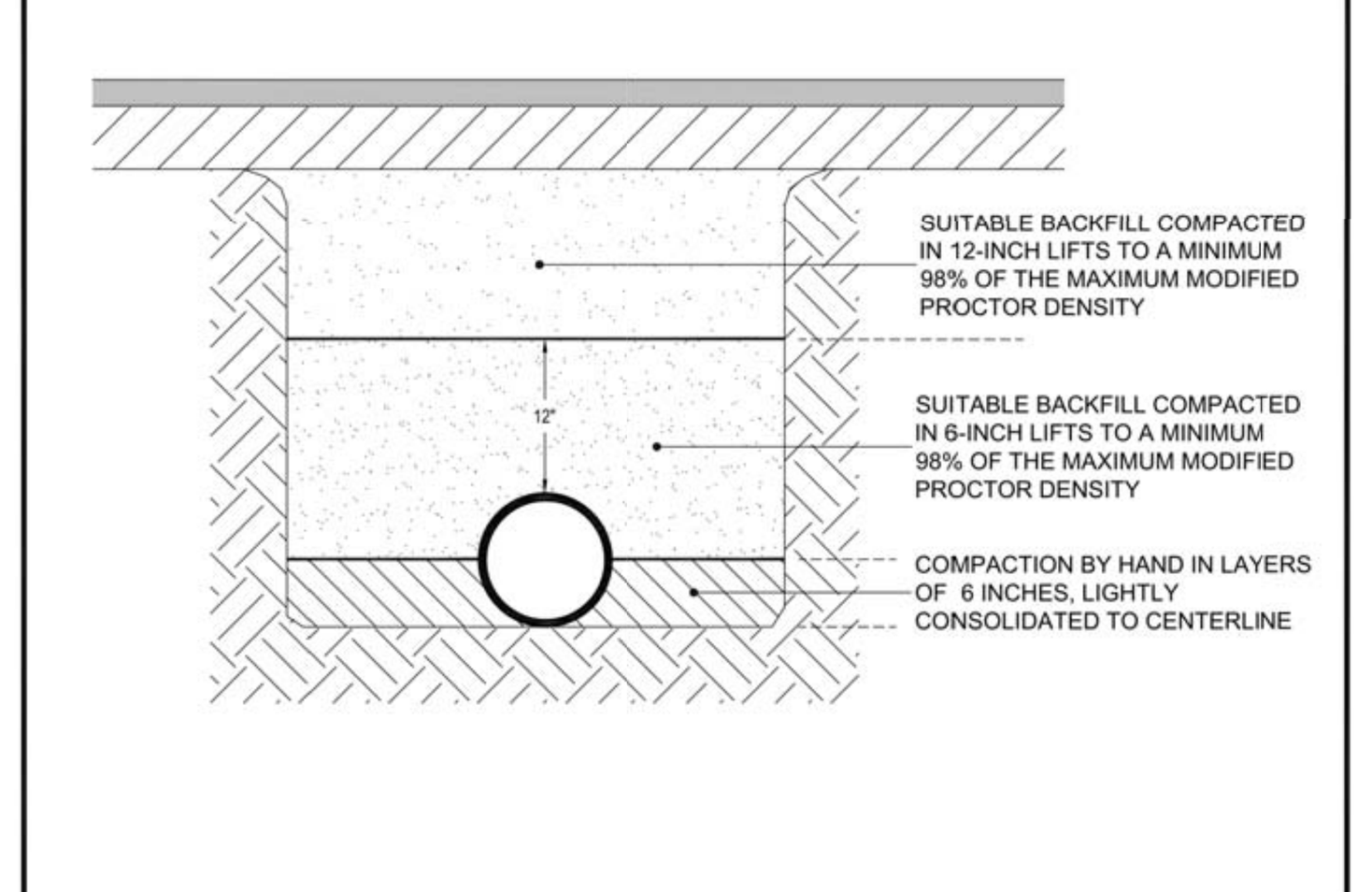

NOTES:

1. TYPE 2 TRENCH IS DEFINED AS A FLAT-BOTTOM TRENCH. LIGHTLY CONSOLIDATE BACKFILL TO CENTERLINE OF PIPE.
2. THIS STANDARD SHALL BE UTILIZED IN THE ABSENCE OF SPECIFIC STANDARDS. THE STANDARD OF THE AGENCY CONTROLLING THE RIGHT-OF-WAY SHALL GOVERN UNLESS OTHERWISE DIRECTED BY CITY ENGINEER.
3. SUITABLE BACKFILL SHALL BE DEFINED AS MATERIAL FREE FROM CINDERS, ASHES, REFUSE, CLAY, ORGANIC MATTER, BOULDERS, ROCKS OR STONES, OR OTHER MATERIAL THAT IN THE OPINION OF THE CITY ENGINEER IS UNSUITABLE.
4. NON-PERVIOUS AREAS SHALL MEAN ANY CONCRETE OR ASPHALT CURB, SIDEWALK, TRAIL, DRIVEWAY, OR ROADWAY.

City of Tampa Florida Water Department	LAST REVISION JAN 2018	TRENCHING, BEDDING AND BACKFILL DETAIL FOR NON-PERVIOUS (PAVED) AREAS	2.01A

WILDERARCHITECTURE, INC.
1315 E. SEVENTH AVENUE
SUITE 106
TAMPA, FLORIDA 33605.3607
TELEPHONE 813.242.6677
FACSIMILE 813.242.6683
wilderarchitecture.com
AA26000655

LAUREN DECKER CAMPO LICENSE No. 57421 STATE OF FLORIDA PROFESSIONAL ENGINEER
Lauren D. Campo P.E. # 57421 09/16/2020

CEI CIVIL ENGINEERS CONSTRUCTION INSPECTORS PLANNERS
CAMPO ENGINEERING, INC.
FBPR REGISTRY NO.: 26726
1725 EAST 5TH AVENUE
TAMPA, FL. 33605
PHONE: (813) 215-7372
FAX: (813) 902-8782

HILLSBOROUGH COUNTY BOARD OF COUNTY COMMISSIONERS
COUNTY CENTER
601 E KENNEDY BLVD
TAMPA, FL 33601

HILLSBOROUGH COUNTY NORTHWEST AREA HEAD START

PROJECT #: 2010-00

DISTRIBUTION	DATE
90% CONST DOCS	08.19.2020

UTILITY DETAILS

C-8

G:\Projects\19-026 - HC Church Park Improvements\Drawings\Design & Construction\19-026 - Utility Details.dwg - Printed Sep 16, 2020-1:25pm by: GageS

SPECIFICATION 333006

Exhibit No. S-2A

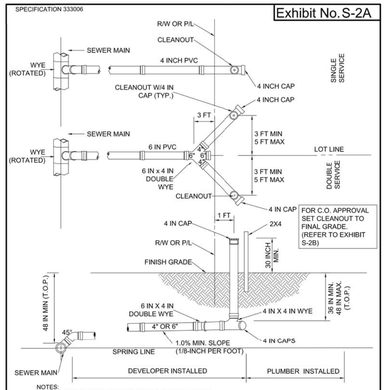

NOTES:
1. CENTER THE DOUBLE WYE FITTING ON THE LOT LINE.
2. INVERT OF SERVICE LATERAL SHALL NOT ENTER SEWER BELOW SPRING LINE.
3. THE TOP OF THE CLEANOUT SHALL TERMINATE 30 TO 40 INCHES ABOVE DESIGN GRADE UNTIL CONNECTION TO A STRUCTURE IS MADE.
4. ALL LATERALS SHALL BE CONSTRUCTED OF SDR 26 PVC.
5. ALL LATERAL LOCATIONS SHALL BE MARKED WITH AN "S" SAW CUT INTO THE TOP OF CURB.
6. CLEANOUTS SHALL NOT BE INSTALLED IN CONCRETE (NO DRIVEWAYS OR SIDEWALKS).

TYPICAL PVC SANITARY SEWER NEW CONNECTION W/CLEANOUT	10/2017
HILLSBOROUGH COUNTY, FLORIDA	SCALE: N.T.S.

SPECIFICATION 333006

Exhibit No. S-2B

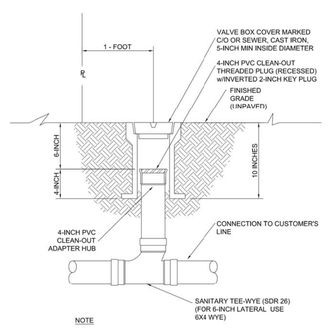

NOTE
1. ALL PIPING AND FITTINGS TO BE PVC SDR 26
2. CLEANOUT SHALL NOT BE INSTALLED IN CONCRETE

CLEAN-OUT DETAIL WITH VALVE BOX COVER	10/2017
HILLSBOROUGH COUNTY, FLORIDA	SCALE: N.T.S.

SPECIFICATION 333006

Exhibit No. S-3B

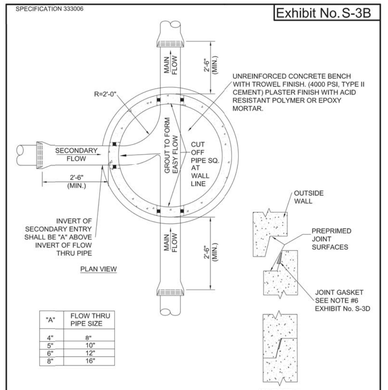

"A"	FLOW THRU PIPE SIZE
4"	8"
5"	10"
6"	12"
8"	16"

NOTE:
ALL STANDARD MANHOLE NOTES APPLY. REFER TO EXHIBIT No. S-3D.

STANDARD 48" PRECAST MANHOLE FOR SEWERS 16" OR LESS IN DIA	10/2017
HILLSBOROUGH COUNTY, FLORIDA	SCALE: N.T.S.

SPECIFICATION 333006

Exhibit No. S-3B

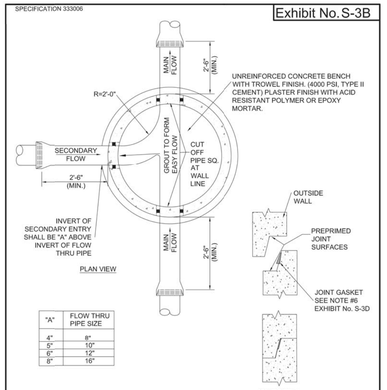

"A"	FLOW THRU PIPE SIZE
4"	8"
5"	10"
6"	12"
8"	16"

NOTE:
ALL STANDARD MANHOLE NOTES APPLY. REFER TO EXHIBIT No. S-3D.

STANDARD 48" PRECAST MANHOLE FOR SEWERS 16" OR LESS IN DIA	10/2017
HILLSBOROUGH COUNTY, FLORIDA	SCALE: N.T.S.

SPECIFICATION 333006

Exhibit No. S-3D

NOTES:
1. PRECAST MANHOLE SECTIONS & BASES SHALL BE MANUFACTURED IN ACCORDANCE WITH LATEST EDITION OF ASTM C478 WITH 4000 P.S.I., TYPE II CEMENT (ASTM C150).
2. CONCRETE PLACED IN MANHOLE INVERTS SHALL HAVE A MINIMUM 28 DAY COMPRESSIVE STRENGTH OF 4000 P.S.I. AND SHALL UTILIZE TYPE II CEMENT.
3. LIFT HOLES THROUGH PRECAST STRUCTURES ARE NOT PERMITTED.
4. ALL PIPE PENETRATIONS SHALL BE PRECAST OR CORE-DRILLED. THE PERIMETER OF A PENETRATION SHALL NOT BE CLOSER THAN 12 INCHES TO A BARREL SECTION JOINT.
5. FLEXIBLE PIPE CONNECTORS (ASTM C293) SHALL BE USED AT ALL PIPE PENETRATIONS.
6. JOINT CONTACT SURFACES SHALL BE SEALED USING A RUBBER GASKET PER THE MANUFACTURER'S RECOMMENDATION. GASKETS SHALL BE 1/2 INCH THICK WITH WIDTH AT LEAST 1/2 THE WALL THICKNESS.
7. THE INTERIOR OF THE ADJUSTMENT SECTION (GRADE RINGS) SHALL BE PLASTERED WITH 3/4 INCH ACID RESISTANT MORTAR WHEN CONCRETE IS USED.
8. THE MANHOLE COVER SHALL BE EQUIPPED WITH AN INFLOW PROTECTOR AND SHALL COMPLY WITH SPECIFICATION 333001, PART 3.3.8 THE APPROVED PRODUCTS LIST IN APP. B.
9. BOTTOM BARREL AND BASE OF MANHOLE TO BE MONOLITHICALLY CAST.
10. SERVICE LATERALS SHALL NOT ENTER A MANHOLE UNLESS THE MANHOLE IS A TERMINAL MANHOLE, AND SPECIFIED ON THE PLANS, IF APPROVED, THE LATERAL MUST BE TREATED AS A MAIN (SHOW ELEVATIONS, PRECAST OR CORE-DRILLED PENETRATIONS, FLOW CHANNEL CONSTRUCTION, ETC.).
11. AN OUTSIDE DROP CONNECTION SHALL BE REQUIRED FOR ALL INFLUENT LINES WHICH HAVE AN INVERT 2-FOOT OR MORE ABOVE THE MANHOLE INVERT.
12. FOR NONSTANDARD MANHOLES, THE ENGINEER OF RECORD SHALL DESIGN ALL MANHOLE REINFORCEMENT STEEL AND JOINT DETAILS AND SHALL SUBMIT CALCULATIONS TO THE COUNTY FOR REVIEW.
13. PRECAST OR CORE-DRILLED PENETRATION DIAMETERS SHALL BE PER MANUFACTURER SPECIFICATIONS OR AS FOLLOWS: 12 INCH FOR 8 INCH DIAMETER PIPE. 14 INCH TO 16 INCH FOR 10 INCH DIAMETER PIPE. 16 INCH FOR 12 INCH DIAMETER PIPE.
14. MATERIALS OF CONSTRUCTION, PLACEMENT, AND COMPACTION REQUIREMENTS FOR BEDDING MATERIALS SHALL BE PER COUNTY SPECIFICATIONS.
15. FLOW CHANNELS SHALL BE CONSTRUCTED TO DIRECT INFLUENT INTO THE FLOW STREAM.
16. PROPERLY SHAPED SPILLWAYS SHALL BE CONSTRUCTED BETWEEN PIPES WITH DIFFERENT INVERT ELEVATIONS TO PROVIDE FOR SMOOTH FLOWS.

STANDARD NOTES PRECAST MANHOLES	10/2017
HILLSBOROUGH COUNTY, FLORIDA	SCALE: N.T.S.

SPECIFICATION 333006

Exhibit No. S-9A

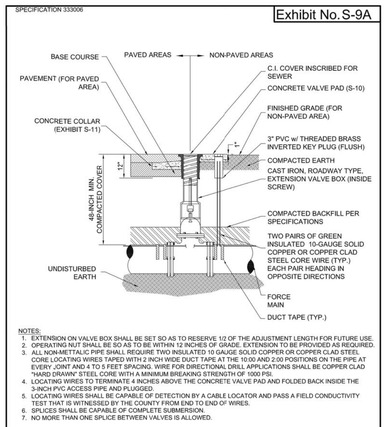

NOTES:
1. EXTENSION ON VALVE BOX SHALL BE SET SO AS TO RESERVE 1/2 OF THE ADJUSTMENT LENGTH FOR FUTURE USE.
2. OPERATING NUT SHALL BE SO AS TO BE WITHIN 12 INCHES OF GRADE. EXTENSION TO BE PROVIDED AS REQUIRED.
3. ALL NON-METTALIC PIPE SHALL REQUIRE TWO INSULATED 10 GAUGE SOLID COPPER OR COPPER CLAD STEEL CORE LOCATING WIRES TAPED WITH 2 INCH WIDE DUCT TAPE AT THE 10:00 AND 2:00 POSITIONS ON THE PIPE AT EVERY JOINT AND 4 TO 5 FEET SPACING. WIRE FOR DIRECTIONAL DRILL APPLICATIONS SHALL BE COPPER CLAD "HARD DRAWN" STEEL CORE WITH A MINIMUM BREAKING STRENGTH OF 1000 PSI.
4. LOCATING WIRES TO TERMINATE 4 INCHES ABOVE THE CONCRETE VALVE PAD AND FOLDED BACK INSIDE THE 3-INCH PVC ACCESS PIPE AND PLUGGED.
5. LOCATING WIRES SHALL BE CAPABLE OF DETECTION BY A CABLE LOCATOR AND PASS A FIELD CONDUCTIVITY TEST THAT IS WITNESSED BY THE COUNTY FROM END TO END OF WIRES.
6. SPLICES SHALL BE CAPABLE OF COMPLETE SUBMERSION.
7. NO MORE THAN ONE SPLICE BETWEEN VALVES IS ALLOWED.

VALVE AND TRACER WIRE PAVED OR NON-PAVED AREAS	10/2017
HILLSBOROUGH COUNTY, FLORIDA	SCALE: N.T.S.

SPECIFICATION 333006

Exhibit No. S-10

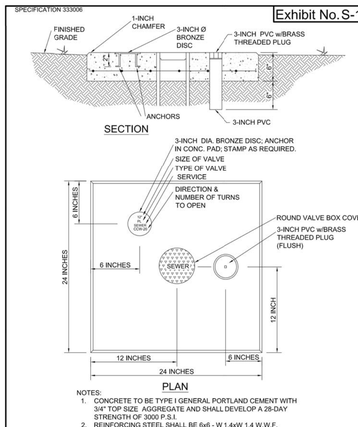

NOTES:
1. CONCRETE TO BE TYPE I GENERAL PORTLAND CEMENT WITH 3/4" TOP SIZE AGGREGATE AND SHALL DEVELOP A 28-DAY STRENGTH OF 3000 P.S.I.
2. REINFORCING STEEL SHALL BE 6x6 - W 1.4xW 1.4 W.W.F.
3. CONCRETE VALVE PAD SHALL BE POURED IN PLACE AND SHALL BE SET 1/2" ABOVE FINISHED GRADE

CONCRETE VALVE PAD (FOR UNPAVED AREAS)	10/2017
HILLSBOROUGH COUNTY, FLORIDA	SCALE: N.T.S.

SPECIFICATION 333006

Exhibit No. S-11

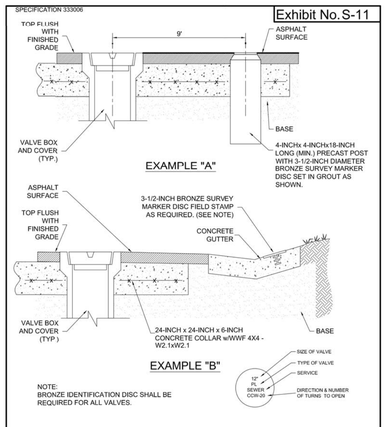

NOTE:
BRONZE IDENTIFICATION DISC SHALL BE REQUIRED FOR ALL VALVES.

MARKER DISC DETAIL

VALVE BOX AND MARKER INSTALLATION FOR PAVED AREAS	10/2017
HILLSBOROUGH COUNTY, FLORIDA	SCALE: N.T.S.

SPECIFICATION 333006

Exhibit No. S-15

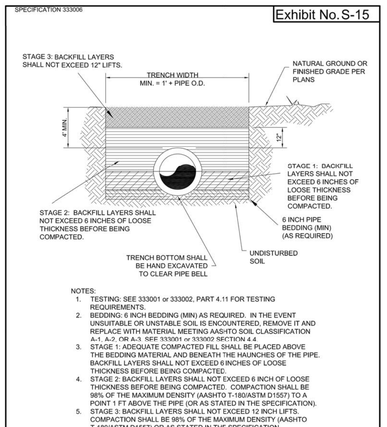

NOTES:
1. TESTING: SEE 333001 or 333002, PART 4.11 FOR TESTING REQUIREMENTS.
2. BEDDING: 6 INCH BEDDING (MIN) AS REQUIRED. IN THE EVENT UNSUITABLE OR UNSTABLE SOIL IS ENCOUNTERED, REMOVE IT AND REPLACE WITH MATERIAL MEETING AASHTO SOIL CLASSIFICATION A-1, A-2, OR A-3. SEE 333001 or 333002 SECTION 4.4.
3. STAGE 1: ADEQUATE COMPACTED FILL SHALL BE PLACED ABOVE THE BEDDING MATERIAL AND BENEATH THE HAUNCHES OF THE PIPE. BACKFILL LAYERS SHALL NOT EXCEED 6 INCHES OF LOOSE THICKNESS BEFORE BEING COMPACTED.
4. STAGE 2: BACKFILL LAYERS SHALL NOT EXCEED 6 INCH OF LOOSE THICKNESS BEFORE BEING COMPACTED. COMPACTION SHALL BE 98% OF THE MAXIMUM DENSITY (AASHTO T-180/ASTM D1557) TO A POINT 1 FT ABOVE THE PIPE (OR AS STATED IN THE SPECIFICATION).
5. STAGE 3: BACKFILL LAYERS SHALL NOT EXCEED 12 INCH LIFTS. COMPACTION SHALL BE 98% OF THE MAXIMUM DENSITY (AASHTO T-180/ASTM D1557) OR AS STATED IN THE SPECIFICATION

TRENCH DETAIL BACKFILL & COMPACTION	10/2017
HILLSBOROUGH COUNTY, FLORIDA	SCALE: N.T.S.

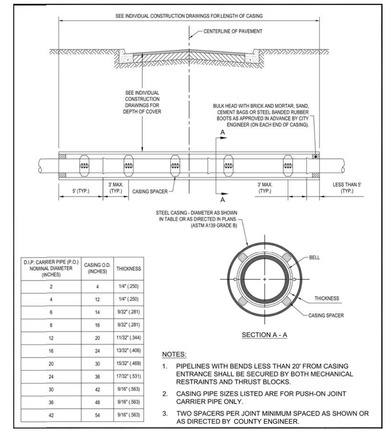

D.I.P. CARRIER PIPE (P.O.) NOMINAL DIAMETER (INCHES)	CASING O.D. (INCHES)	THICKNESS
2	4	1/4" (.250)
4	12	1/4" (.250)
6	14	9/32" (.281)
8	16	9/32" (.281)
12	20	11/32" (.344)
16	24	13/32" (.406)
20	30	15/32" (.469)
24	36	17/32" (.531)
30	42	9/16" (.563)
36	48	9/16" (.563)
42	54	9/16" (.563)

SECTION A - A

NOTES:
1. PIPELINES WITH BENDS LESS THAN 20' FROM CASING ENTRANCE SHALL BE SECURED BY BOTH MECHANICAL RESTRAINTS AND THRUST BLOCKS.
2. CASING PIPE SIZES LISTED ARE FOR PUSH-ON JOINT CARRIER PIPE ONLY.
3. TWO SPACERS PER JOINT MINIMUM SPACED AS SHOWN OR AS DIRECTED BY COUNTY ENGINEER.

JACKING & BORING FOR PAVEMENT CROSSING
N.T.S.

1315 E. SEVENTH AVENUE
SUITE 106
TAMPA, FLORIDA 33605.3607

TELEPHONE 813.242.6677
FACSIMILE 813.242.6683

wilderarchitecture.com

AA26000655

WILDERARCHITECTURE, INC.

LAUREN DECKER CAMPO
LICENSE
No. 57421
STATE OF FLORIDA
PROFESSIONAL ENGINEER

Lauren D. Campo P.E. # 57421 09/16/2020

CEI CIVIL ENGINEERS • CONSTRUCTION INSPECTORS • PLANNERS

CAMPO ENGINEERING, INC.
FBPR REGISTRY NO.: 26726
1725 EAST 5TH AVENUE
TAMPA, FL. 33605
PHONE: (813) 215-7372
FAX: (813) 902-8782

HILLSBOROUGH COUNTY BOARD OF COUNTY COMMISSIONERS
COUNTY CENTER
601 E KENNEDY BLVD
TAMPA, FL 33601

HILLSBOROUGH COUNTY
NORTHWEST AREA HEAD START

PROJECT #: 2010-00	
DISTRIBUTION	DATE
90% CONST DOCS	08.19.2020

UTILITY DETAILS

C-9

G:\Projects\19-026 - HC Church Park Improvements\Drawings\Design & Construction\19-026 - Utility Details.dwg - Printed Sep 16, 2020--1:25pm by: DagnS

SYMBOL LEGEND

2" DEEP OAK LEAF MULCH

ARGENTINE BAHIA SOD

WEBB ROAD

FOLIO No. 006748-0000

NORTH

SCALE 1" = 20' - 0"

1315 E. SEVENTH AVENUE
SUITE 106
TAMPA, FLORIDA 33605.3607

TELEPHONE 813.242.6677
FACSIMILE 813.242.6683

wilderarchitecture.com

AA26000655

WILDERARCHITECTURE, INC.

L. Alyson Utter, LA0001163

ANDERSON LESNIAK LIMITED, INC.
landscape architects land planners
4921 S. WESTSHORE BOULEVARD
TAMPA, FLORIDA 33611
(813) 831-9595 FAX 831-5485
anderson.lesniak@tampabay.rr.com
www.andersonlesniak.net

HILLSBOROUGH COUNTY BOARD
OF COUNTY COMMISSIONERS
COUNTY CENTER
601 E KENNEDY BLVD
TAMPA, FL 33601

HILLSBOROUGH COUNTY
NORTHWEST AREA HEAD START

PROJECT #: 2010-00	
DISTRIBUTION	DATE
90% CONST DOCS	08.19.2020

LANDSCAPE PLAN

L1.1

SYMBOL LEGEND

2" DEEP OAK LEAF MULCH

ARGENTINE BAHIA SOD

#3 26 | #2 26 | #1 24

#4 19

#18

IRRIGATION WATER SOURCE IS A NEW 4" WELL WITH 2 HP PUMP

INSTALL MAINLINE AND VALVES WITHIN PROPERTY TYPICAL

WEBB ROAD

FOLIO No. 006748-0000

S89° 10' 22"E 312.62' (F)

S00° 17' 16"E 400.15' (F)

N89° 09' 07"W 511.48' (F)

INV 12" CMP
ELEV=6.22

NORTH

SCALE 1" = 20' - 0"

1315 E. SEVENTH AVENUE
SUITE 106
TAMPA, FLORIDA 33605.3607

TELEPHONE 813.242.6677
FACSIMILE 813.242.6683

wilderarchitecture.com

AA26000655

WILDERARCHITECTURE, INC.

L. Alyson Utter, LA0001163

ANDERSON LESNIAK LIMITED, INC.
landscape architects land planners
4921 S. WESTSHORE BOULEVARD
TAMPA, FLORIDA 33611
(813) 831-9595 FAX 831-5485
anderson.lesniak@tampabay.rr.com
www.andersonlesniak.net

HILLSBOROUGH COUNTY BOARD
OF COUNTY COMMISSIONERS
COUNTY CENTER
601 E KENNEDY BLVD
TAMPA, FL 33601

HILLSBOROUGH COUNTY
NORTHWEST AREA HEAD START

PROJECT #: 2010-00	
DISTRIBUTION	DATE
90% CONST DOCS	08.19.2020

IRRIGATION PLAN

L1.2

IRRIGATION MATERIAL LIST

SYMBOL	QUANTITY	MODEL NUMBER
A ●	178	1402-0.5 GPM FULL CIRCLE BUBBLER, 2 PER TREE
B ●	2	1401, 0.25 GPM FULL CIRCLE BUBBLER, 1 PER TREE
▨	± 1300 LF	XFD-04-18-250, LANDSCAPE DRIPLINE
◒	2	150-PEB-PRSD, 1 1/2" ELECTRIC VALVE
◎	2	100-PEB-PRSD, 1" ELECTRIC VALVE
⊕	1	XCZ-PRB-150-COM, CONTROL ZONE KIT
▬ ▬ ▬	± 600 LF	2" PVC, SCHEDULE 40, MAIN LINE
⊠	1	ESP-LX BASIC CONTROLLER, 12 STATIONS
	1	RAIN CHECK, AUTOMATIC RAIN SHUTOFF

PLANT MATERIAL LIST

SYMBOL	QUANTITY	BOTANICAL NAME	COMMON NAME	SPECIFICATIONS	SPACING
UA	13	ULMUS ALATA	*WINGED ELM*	12' HT X 5' SPD, 1" DBH	AS SHOWN
TD	25	TAXODIUM DISTCHUM	*BALD CYPRESS*	14' HT X 5' SPD, 2" DBH	AS SHOWN
PE	29	PINUS ELLIOTTI	*SLASH PINE*	14' HT X 5' SPD, 2" DBH	AS SHOWN
AR	24	ACER RUBRUM	*RED MAPLE*	14' HT X 5' SPD, 2" DBH	AS SHOWN
SS	9	MYRICANTHES FRAGRANS	*SIMPSON'S STOPPER*	30" HT X 24" SPD, 7 GALLON	36" OC
MF	130	MYRCIANTHES FRAGRANS	*SIMPSON'S STOPPER*	24" HT X 24" SPD, 3 GALLON	36" OC
VS	81	VIBURNUM SUSPENSUM	*SANDANKWA VIRBURNUM*	18" HT X 18" SPD, 3 GALLON	36" OC
IV	50	ILEX VOMITORIA "STOKES DWARF"	*DWARF YAUPON HOLLY*	15" HT X 15" SPD, 3 GALLON	30" OC

TREE REQUIREMENTS

1) INTERIOR TREE REQUIREMENT
ONE TREE PER ISLAND
9 ISLANDS/ 1 = 9 - 2 EXISTING TREES = 7 TREES

2) PARKING PERIMETER BUFFER
ONE CANOPY TREE PER 40 LF
450 LF / 40 = 12 - 4 EXISTING TREES = 8 TREES

3) EXISTING TREE REMOVALS
3 @ 24", 25", 27", 32" = 156" X .5 = 78"
GRAND TREES 36" + 40" = 76" X 1= 76"
78" + 76" = 154"

4) TOTAL TREE REQUIREMENTS
7 + 8 + 154 = 169 TREES @ 1" DBH

TOTAL TREE INCHES

WINGED ELM	13 X 1" =	13"
BALD CYPRESS	25 X 2" =	50"
SLASH PINE	29 X 2" =	58"
RED MAPLE	24 X 2" =	48"
TOTAL INCHES		169"

IRRIGATION INSTALLATION NOTES

1) ALL QUANTITIES SHOWN ON THE DRAWINGS ARE NOT GUARANTEED AS TO ACCURACY AND ARE SHOWN FOR THE PURPOSES OF INDICATING VOLUME OF WORK. IT SHALL BE THE RESPONSIBILITY OF THE BIDDER TO SATISFY HIMSELF AS TO THE ACCURACY OF THE QUANTITIES.

2) PIPING OR VALVES MAY SOMETIMES BE INDICATED AS BEING LOCATED IN UNLIKELY AREAS; I.E., IN BUILDINGS, UNDER PAVEMENT, OR OUTSIDE OF THE PROPERTY LINES. THIS IS DONE FOR GRAPHIC CLARITY ONLY. WHENEVER POSSIBLE, PIPING IS TO BE INSTALLED IN SOIL AREAS.

3) INSTALL IRRIGATION SYSTEM IN ACCORDANCE WITH ALL APPLICABLE CODES.

4) PIPE SIZES ARE LABELED AT LOCATIONS WHERE AN INCREASE IN SIZE OCCURS. CONTINUE PIPE SIZE UNTIL SIZE INCREASE IS INDICATED. PIPES SHALL BE INSTALLED ALONG WALKS, CURBS OR WALLS, THEY SHALL NOT BE INSTALLED IN THE MIDDLE OF PLANTERS. CONTRACTOR SHALL REVIEW LANDSCAPE PLANS TO DETERMINE TREE AND PALM LOCATIONS. MAIN LINE AND LATERALS SHALL BE SCH 40 PVC.

5) ALL POP-UP SPRAY AND ROTOR HEADS SHALL BE INSTALLED ON 18" LONG FLEX PIPE CONNECTIONS. RISERS SHALL BE 28" IN HEIGHT OR 4" ABOVE ADJACENT SHRUBS. ALL IRRIGATION EQUIPMENT SHALL BE BY HUNTER, UNLESS OTHERWISE STATED ON THE PLAN.

6) WATER SOURCE IS A NEW 4" WELL AND 2 HORSE POWER PUMP. IRRIGATION SYSTEM REQUIRES 26 GPM AT 60 PSI. WIRING USED FOR CONNECTING THE VALVES TO THE CONTROLLER SHALL BE TYPE UF, 16 AWG WIRE, WITH PVC INSULATION. ZONE WIRES SHALL BE COLOR CODED, AND COMMON WIRE SHALL BE WHITE. VALVE BOXES SHALL BE RAINBIRD MODEL:VB-STD, STANDARD, GREEN. PLACE 3" GRAVEL INSIDE VALVE BOXES.

7) NEW CONTROLLER SHALL BE WALL MOUNTED IN LOCATION SHOWN ON PLAN, AS APPROVED BY THE PROJECT MANAGER. AFTER 30 DAY PLANT MATERIAL ESTABLISHMENT PERIOD, CONTROLLER SHALL BE SET AS PER LOCAL WATER RESTRICTIONS. AFTER IRRIGATION SYSTEM INSTALLATION IS COMPLETE, CONTRACTOR SHALL PROVIDE THE OWNER WITH AN AS-BUILT DRAWING SHOWING LOCATION OF IRRIGATION HEADS, VALVES AND PIPE.

8) PIPING ON THE PLAN IS DIAGRAMMATICALLY ROUTED FOR CLARITY. DESIGN MODIFICATIONS SHALL BE MADE TO MEET FIELD CONDITIONS. THE PIPING SCHEMATIC IS DESIGNED TO MINIMIZE TRENCHING. WHENEVER POSSIBLE RUN MULTIPLE LINES AND WIRE IN THE SAME TRENCH.

9) WHERE EXISTING OR PROPOSED PAVED SURFACES CROSS IRRIGATION LINES, ALL PIPING UNDER SAID SURFACES SHALL BE IN SLEEVES. SLEEVES SHALL BE SCH 40 PVC, MINIMUM 2" DIAMETER OR AS SPECIFIED ON PLAN.

10) MINIMUM COVER: PROVIDE 18" MINIMUM COVER OVER SLEEVES, 18" MINIMUM COVER OVER TOP OF MAIN LINE AND CONTROL WIRING, AND 12" MINIMUM COVER OVER ANY OTHER INSTALLED IRRIGATION PIPING.

DRIP INSTALLATION NOTES

1) DRIPLINE SHALL BE LAID DIRECTLY UNDER THE 3" MULCH BED. MULCHING OF PLANT BEDS SHALL OCCUR AFTER DRIPLINE INSTALLATION.

2) DRIPLINE SHALL COVER THE FULL EXTENT OF ALL PLANTING BEDS WHERE IT IS INDICATED ON THE DRAWINGS, AT A SPACING OF 12" ON CENTER. ON THE DRIPLINE ZONES, THE ELECTRIC VALVE, DISC FILTER, AND PRESSURE REGULATOR SHALL BE PLACED UNDERGROUND IN A PLASTIC VALVE BOX WITH COVER. ADJUST PRESSURE REGULATOR TO ACCOMMODATE EACH ZONE.

3) INDIVIDUAL SECTIONS OF DRIPLINE SHALL BE CONNECTED USING PVC PIPE, SIZED AS PER GPM REQUIREMENTS. DRIPLINE SHALL BE STAPLED OR OTHERWISE FASTENED TO THE FINISH GRADE EVERY 4' ON CENTER.

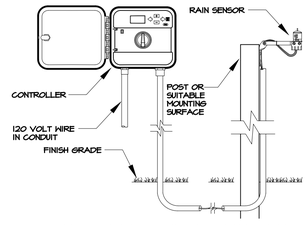

CONTROLLER WITH RAIN SENSOR

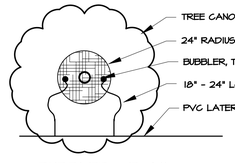

BUBBLER DETAIL

PUMP ASSEMBLY PLAN VIEW

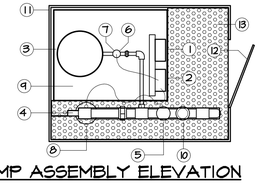

PUMP ASSEMBLY ELEVATION

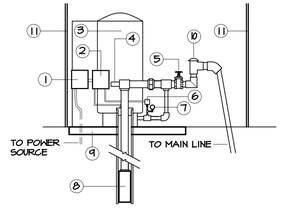

4" WELL WITH 2 HP PUMP

LEGEND

1. DISCONNECT BOX
2. FURNAS MAGNETIC STARTER
3. WELL-X-TROL WX-205 PRESSURE TANK
4. PRESSURE RELEIF VALVE
5. 2" GATE VALVE
6. PRESSURE SWITCH
7. PRESSURE GAUGE
8. GOULDS 3556S20 2 HP SUBMERSIBLE PUMP WITH M20434 460 VOLT, 3 PHASE MOTOR OR TO MATCH POWER AVAILABLE ON SITE
9. 5' X 4' X 4" REINFORCED CONCRETE SLAB
10. PRESSURE VACUUM BREAKER
11. 5' HT CHAIN LINK FENCE
12. 3' WIDE GATE
13. 3" DEEP LAYER OF GRAVEL
14. CYCLE STOP VALVE MODEL CSV3 - 2" INSTALL AS RECOMMENDED BY MANUFACTURER
15. ILB 11/4" LAKOS SEPARATOR WITH MBV AUTOMATIC FURGE VALVE INSTALL AS RECOMMENDED BY MANUFACTURER

ADD ALTERNATE:
16. RUST REMOVER SYSTEM: MODEL # 2702 NEPTUNE INJECTION PUMP WITH MODEL #26507-1, 30 GALLON TANK NOTE: CONTRACTOR SHALL TEST WATER TO DETERMINE FORMULA FEED RATE

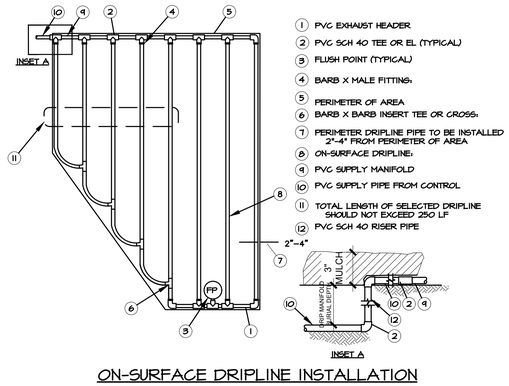

1. PVC EXHAUST HEADER
2. PVC SCH 40 TEE OR EL (TYPICAL)
3. FLUSH POINT (TYPICAL)
4. BARB X MALE FITTING.
5. PERIMETER OF AREA
6. BARB X BARB INSERT TEE OR CROSS.
7. PERIMETER DRIPLINE PIPE TO BE INSTALLED 2'-4" FROM PERIMETER OF AREA
8. ON-SURFACE DRIPLINE.
9. PVC SUPPLY MANIFOLD
10. PVC SUPPLY PIPE FROM CONTROL
11. TOTAL LENGTH OF SELECTED DRIPLINE SHOULD NOT EXCEED 250 LF
12. PVC SCH 40 RISER PIPE

ON-SURFACE DRIPLINE INSTALLATION

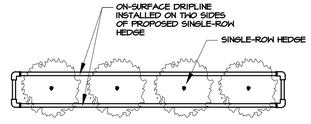

SINGLE-ROW HEDGE DRIPLINE DETAIL

NOTE: TOTAL LENGTH OF DRIPLINE SHALL NOT EXCEED 250 LF

UNDERBRUSH REMOVAL NOTE

THE AREA UNDER THE EXISTING TREES WHERE OAK LEAF MULCH IS SHOWN ON THE PLAN, SHALL BE CLEARED OF UNDERBRUSH TO ALLOW VISIBILITY.

LANDSCAPE INSTALLATION NOTES

1) ALL PLANT MATERIALS SHALL BE FLORIDA #1 OR BETTER AS GIVEN IN, GRADES AND STANDARDS FOR NURSERY PLANTS, FEBRUARY 1998 EDITION, PUBLISHED BY THE FLORIDA DEPARTMENT OF AGRICULTURE AND CONSUMER SERVICES.

2) LOCATION OF PLANTS ON THE PLAN ARE DIAGRAMMATIC- SEE THE LANDSCAPE ARCHITECT FOR QUESTIONS ON EXACT LOCATIONS. THE PLANT MATERIALS LIST IS PROVIDED FOR THE CONVENIENCE OF THE LANDSCAPE CONTRACTOR. SHOULD THERE BE ANY DISCREPANCY BETWEEN THE PLANT LIST AND THE PLAN, THE PLAN SHALL PREVAIL.

3) IT IS THE LANDSCAPE CONTRACTORS RESPONSIBILITY TO INSURE THAT ALL PLANT BED AREAS HAVE PROPER DRAINAGE FOR OPTIMUM GROWTH OF LANDSCAPE MATERIAL BEFORE INSTALLATION BEGINS.

4) THE CONTRACTOR SHALL INSURE THAT ALL PLANTING ISLANDS AND OTHER AREAS SHALL BE CLEAN OF TRASH, CONSTRUCTION DEBRIS, OR OTHER WASTE MATERIALS TO A DEPTH OF 24" PRIOR TO LANDSCAPE INSTALLATION.

5) ALL PLANT BEDS AND TREE RINGS SHALL BE TREATED WITH A PRE-EMERGENT HERBICIDE AND THEN TOP-DRESSED WITH 3" DEEP TRIPLE SHREDDED BLACK MULCH. ALL NEW TREES SHALL HAVE A TREE RING WITH A MINIMUM OF 24" RADIUS, ALL NEW TREES AND PALMS SHALL BE STAKED. ALL EXISTING TREES TO REMAIN SHALL HAVE A 6' RADIUS MULCH RING AT A DEPTH OF 3".

6) NEW SOD SHALL BE APPROXIMATELY ± 50,000 SF OF ARGENTINE BAHIA SOD, IN THE LOCATIONS SHOWN ON THE PLAN. CONTRACTOR SHALL DETERMINE EXACT QUANTITIES IN THE FIELD. SOD AREAS SHALL BE MAINTAINED BY THE CONTRACTOR FROM THE TIME OF INSTALLATION TO THE TIME OF FINAL ACCEPTANCE.

7) TREES SHRUBS, AND GROUND COVER SHALL BE INSTALLED USING THE FOLLOWING PROCEDURE: PLANT PITS SHALL BE EXCAVATED TO TWICE THE DIAMETER OF THE PLANT ROOT BALL. AERATE EXISTING SOIL BEFORE BACKFILLING PIT.

8) TREE INSTALLATION: ALL REQUIRED TREES SHALL BE INSTALLED 1" - 2" ABOVE FINISH GRADE. TREES INSTALLED OR BURIED TOO DEEP SHALL BE RESET TO THIS STANDARD. REMOVE THE TOP 1/3 OF THE WIRE BASKETS ON ALL B & B STOCK.

SCREENING ABOVE GROUND UTILITIES

1) THE CONSTRUCTION OF ALL ABOVE GROUND UTILITY APPURTENANCES VISIBLE FROM THE PUBLIC RIGHT-OF-WAY SUCH AS PEDESTALS, UTILITY METERS, TRANSFORMERS, BACK-FLOW PREVENTION DEVICES, ETC. FOR NEW DEVELOPMENT OR REDEVELOPMENT ACTIVITIES SHALL CONFORM TO SCREENING REQUIREMENTS AS OUTLINED IN SECTION 6.06.06.C.10 OF THE LANDSCAPE DEVELOPMENT CODE. PLANT LOCATION MUST BE CONSIDERATE OF REQUIRED SPATIAL SEPARATIONS FROM A FIRE FLOW PROTECTION APPLIANCE IN ACCORDANCE TO THE UNIFORM FIRE CODE.

2) BACKFLOW PREVENTERS ON THIS SITE WILL NOT EXCEED 24" IN HEIGHT. SCREENING HEDGE IS PROPOSED TO BE 30" HT, SO THE BACKFLOW PREVENTER WILL BE LOWER THAN THE ADJACENT SCREENING HEDGE.

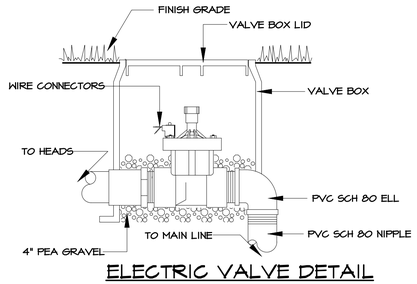

ELECTRIC VALVE DETAIL

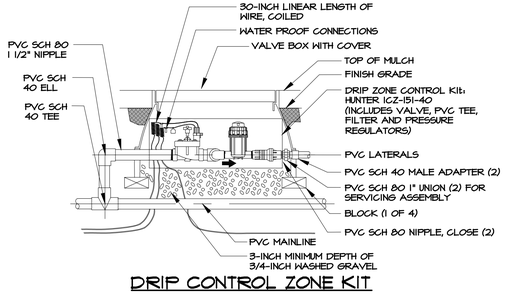

DRIP CONTROL ZONE KIT

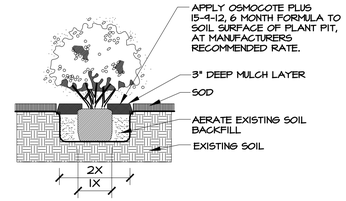

SHRUB PLANTING DETAIL

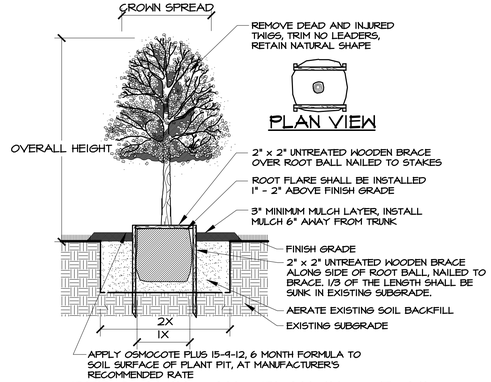

PLAN VIEW

TREE STAKING AND PLANTING DETAIL

1315 E. SEVENTH AVENUE
SUITE 106
TAMPA, FLORIDA 33605.3607

TELEPHONE 813.242.6677
FACSIMILE 813.242.6683

wilderarchitecture.com

AA26000655

WILDERARCHITECTURE, INC.

L. Alyson Utter, LA0001163

ANDERSON LESNIAK LIMITED, INC.
landscape architects land planners

4921 S. WESTSHORE BOULEVARD
TAMPA, FLORIDA 33611

(813) 831-9595 FAX 831-5485
anderson.lesniak@tampabay.rr.com
www.andersonlesniak.net

HILLSBOROUGH COUNTY BOARD
OF COUNTY COMMISSIONERS
COUNTY CENTER
601 E KENNEDY BLVD
TAMPA, FL 33601

HILLSBOROUGH COUNTY
NORTHWEST AREA HEAD START

PROJECT #: 2010-00	
DISTRIBUTION	DATE
90% CONST DOCS	08.19.2020

LANDSCAPE AND IRRIGATION NOTES AND DETAILS

L1.3

GENERAL STRUCTURAL NOTES

GENERAL NOTES:

1. CONTRACTOR IS RESPONSIBLE FOR AND SHALL VERIFY AND COORDINATE ALL DIMENSIONS AND DETAILS BEFORE PROCEEDING WITH WORK. ANY DISCREPANCIES SHALL BE BROUGHT TO THE IMMEDIATE ATTENTION OF THE ARCHITECT AND ENGINEERS.
2. DETAILS SHOWN IN ANY SECTION APPLY TO ALL SIMILAR SECTIONS AND CONDITIONS UNLESS NOTED OTHERWISE.
3. CONTRACTOR SHALL FULLY BRACE AND OTHERWISE PROTECT ALL WORK IN PROGRESS UNTIL THE BUILDING IS COMPLETED.
4. ALL STRUCTURAL ITEMS FOR THIS PROJECT HAVE BEEN DESIGNED IN ACCORDANCE WITH APPROPRIATE PROVISIONS OF EACH OF THE FOLLOWING:

   A. THE FLORIDA BUILDING CODE, (SIXTH EDITION) 2017.
   B. ACI STANDARD 318-14 BUILDING CODE REQUIREMENTS FOR REINFORCED CONCRETE.
   C. BUILDING CODE REQUIREMENTS FOR MASONRY STRUCTURES (ACI 530-13/ASCE 5-13/TMS 402-16).
   D. AISC "SPECIFICATION FOR THE DESIGN, FABRICATION AND ERECTION OF STRUCTURAL STEEL FOR BUILDINGS" 360-10.
   E. NDS FOR WOOD CONSTRUCTION WITH 2015 NDS SUPPLEMENT.
   F. ASCE 7-10 (WITH ERRATA DATED JANUARY11, 2011) "MINIMUM DESIGN LOADS FOR BUILDINGS AND OTHER STRUCTURES".

5. THE STRUCTURAL DRAWINGS SHALL BE USED IN CONJUNCTION WITH THE SPECIFICATIONS AND THE ARCHITECTURAL AND MECHANICAL DRAWINGS. IF THERE IS A DISCREPANCY BETWEEN DRAWINGS, IT IS THE CONTRACTOR'S RESPONSIBILITY TO NOTIFY THE ARCHITECT PRIOR TO PERFORMING WORK. IN CASE OF CONFLICT THE MOST STRINGENT CONDITION SHALL APPLY.
6. ALL DIMENSIONS MUST BE COORDINATED WITH ARCHITECTURAL DRAWINGS AND WITH EQUIPMENT MANUFACTURER (I.E. WINDOW, DOOR, AIR HANDLER, ETC.). CONTRACTOR MUST OBTAIN AN ARCHITECTURAL DIRECTIVE IN CASE OF ANY CONFLICT. REFER TO ARCHITECTURAL DRAWINGS FOR DIMENSIONS NOT SHOWN IN STRUCTURAL DRAWINGS.
7. ROOFTOP EQUIPMENT ANCHORAGE & OUTDOOR RACK MOUNTED EQUIPMENT ANCHORAGE. ALL ROOF TOP EQUIPMENT CURBS, ROOF TOP MECHANICAL EQUIPMENT, EQUIPMENT TIE DOWNS, AND CONNECTIONS OF ALL EQUIPMENT TO OUTDOOR RACKS OR BUILDING STRUCTURE FOR WIND LOADING ARE TO BE DESIGNED AND ENGINEERED BY A REGISTERED SPECIALTY ENGINEER RETAINED BY THE MECHANICAL EQUIPMENT SUPPLIER. SIGNED AND SEALED DRAWINGS AND CALCULATIONS ARE TO BE SUBMITTED TO THE ENGINEER OF RECORD FOR REVIEW AND APPROVAL. THE EQUIPMENT MANUFACTURER SHALL PROVIDE THE ATTACHMENT OF THE UNIT TO THE STRUCTURE AND SUBMIT TO THE ENGINEER LOADS, LOCATIONS, AND METHODS OF ATTACHMENT. THE STRUCTURAL ENGINEER WILL MAKE PROVISIONS IN THE DESIGN OF THE PRIMARY STRUCTURAL FRAME TO ACCOMMODATE THE LOADS AND ATTACHMENTS SUBMITTED BY THE MANUFACTURER.

CONCRETE AND REINFORCING:

1. ALL CONCRETE WORK SHALL CONFORM TO THE LATEST ACI "BUILDING CODE REQUIREMENTS FOR REINFORCED CONCRETE, ACI-318".
2. ALL CONCRETE SHALL HAVE A MINIMUM 28-DAY COMPRESSIVE STRENGTHS AS INDICATED BELOW:

CONCRETE STRENGTH	MAX WATER CEMENT RATIO	TYPE AGGREGATE	LOCATION USED
4000 PSI	0.45	STONE	CONCRETE U.N.O.
3000 PSI	0.52	STONE	FOUNDATIONS

3. ALL REINFORCING STEEL SHALL BE INTERMEDIATE GRADE, NEW BILLET STEEL, DEFORMED BARS, CONFORMING TO ASTM A-615, GRADE 60. ALL BARS SHALL BE SECURELY SUPPORTED AND WIRED IN PLACE. PRIOR TO POURING CONCRETE. ALL REINFORCING STEEL TO BE WELDED SHALL CONFORM TO ASTM A-706.
4. ALL WELDED WIRE FABRIC (W.W.F.) IN FLAT SHEETS ONLY AND SHALL CONFORM TO ASTM A-185.
5. UNLESS NOTED, ALL BARS MARKED CONTINUOUS SHALL BE SPLICED AT ALL LAP POINTS AND CORNERS AND DEVELOPED AT NON-CONTINUOUS ENDS AS PER TYPICAL DETAILS. SPLICE CONTINUOUS TOP BARS AT CENTER BETWEEN SUPPORTS AND SPLICE CONTINUOUS BOTTOM BARS AT SUPPORTS.
6. CONCRETE COVER FOR REINFORCING BARS SHOWN IN TYPICAL DETAILS.
7. UNLESS NOTED, TEMPERATURE REINFORCING (ASTM A-615-60) TO BE 0.0018 X CONCRETE AREA.
8. PROVIDE #4 @ 12" O.C., WITH STANDARD HOOK, TOP BARS IN ALL SLABS AT DISCONTINUOUS ENDS UNLESS OTHERWISE NOTED ON PLANS. LENGTH OF BARS 1/4 OF SPAN, MINIMUM 3'-0". UNLESS OTHERWISE NOTED PROVIDE #4 @ 12" O.C IN ALL CANTILEVERS. BAR LENGTH SHALL BE CANTILEVER SPAN PLUS 10'-0" PLUS STANDARD HOOK AT CANTILEVER ENDS.
9. WHERE PIPE SLEEVES (UP TO 2" IN DIAMETER) PASS THROUGH CONCRETE BEAMS, PROVIDE ADDITIONAL STIRRUP EACH SIDE OF SLEEVE. SLEEVES FOR PIPES 2" IN DIAMETER OR LARGER MUST BE STEEL OR CAST IRON, AND THE LOCATION MUST BE APPROVED BY THE STRUCTURAL ENGINEER.
10. ALL CONSTRUCTION JOINTS SHALL BE THOROUGHLY CLEANED JUST BEFORE PLACING NEW CONCRETE IN ACCORDANCE WITH THE BUILDING CODE.
11. FOR CHAMFER OF EXPOSED CORNERS OF BEAMS AND/OR COLUMNS, SEE ARCHITECTURAL DRAWINGS.
12. CONTRACTOR SHALL COORDINATE PLACEMENT OF, OR BOX OUT FOR, ALL PIPE SLEEVES, OPENINGS, ETC, REQUIRED FOR VARIOUS TRADES.
13. CONTRACTOR SHALL COORDINATE AND NOTIFY OTHER TRADES IN SUFFICIENT TIME TO ALLOW THEM TO SET ANCHORS, INSERTS, BOLTS, HANGERS, ETC., AS REQUIRED FOR THEIR USE.
14. SEE ARCHITECTURAL DRAWINGS FOR DETAILS OF FLASHING REGLETS, FASCIA DETAILS, ETC.
15. UNDER NO CIRCUMSTANCES SHALL CONCRETE BE PUMPED THROUGH ALUMINUM PIPES. CONCRETE SHALL NOT BE PLACED IN CONTACT WITH ALUMINUM, ALUMINUM MIXING DRUMS, TRUCK MIXERS, BUGGIES, CHUTES, CONVEYORS, TREMIE PIPES, AND OTHER EQUIPMENT MADE OF ALUMINUM SHALL NOT BE USED ON THIS PROJECT.
16. SLUMPS OF OVER 4 INCHES WILL NOT BE PERMITTED UNLESS THE HRWR ADMIXTURE (SUPER PLASTICIZER) IS USED. MAXIMUM SLUMP IS THEN 8 INCHES UNLESS OTHERWISE DIRECTED BY THE ENGINEER.
17. NO ADMIXTURE SHALL BE USED IN CONCRETE EXCEPT WITH THE PERMISSION OF THE ENGINEERS AND AFTER LABORATORY DESIGN MIX APPROVAL. ALL ADMIXTURES SHALL CONTAIN NO MORE CHLORIDE IONS THAN ARE PRESENT IN MUNICIPAL DRINKING WATER.
18. WATER REDUCING ADMIXTURE SHALL CONFORM TO THE ASTM C-494, TYPE A, AND SHALL BE USED IN ALL CONCRETE.
19. AIR ENTRAINING ADMIXTURE SHALL CONFORM TO ASTM C260. AIR CONTENT OF CONCRETE SHALL BE USED AS FOLLOWS:

    A. FOR CONCRETE EXPOSED TO SOIL AND/OR WEATHER, 5%.
    B. FOR INTERIOR WALLS, COLUMNS, AND SLABS, 3%.

20. FLY ASH - ASTMC618, TYPE C OR TYPE F SHOULD BE USED BUT NOT TO EXCEED 20% CEMENTITIOUS CONTENT.
21. ALL EXPOSED CONCRETE SLABS SHALL RECEIVE A CURING COMPOUND. THE CURING COMPOUND SHALL CONFORM TO ASTM C309 AND SHALL HAVE 30% SOLIDS MINIMUM. WATER/BLANKET CURING AS PER ACI RECOMMENDATION MAY BE USED AS ALTERNATE.

FOUNDATION NOTES:

1. SITE SOIL FOR THIS PROJECT HAS BEEN INVESTIGATED BY THE FIRM OF ARHENA ENGINEERING, INC. AND FOUND, AS PRESENTED IN THEIR REPORT DATED JULY 10, 2020. FOUNDATIONS HAVE BEEN DESIGNED IN ACCORDANCE WITH THE REPORT BASED UPON AN ALLOWABLE SOIL BEARING PRESSURE OF 2,500 PSF.
2. FILL AND SUBGRADE PREPARATION SHALL BE IN ACCORDANCE WITH THE GEOTECHNICAL ENGINEER RECOMMENDATION AS CONTAINED IN THEIR REPORT STATED IN ITEM 1.
3. ALL COLUMN FOOTINGS SHALL BE CENTERED UNDER COLUMN CENTERLINES UNLESS OTHERWISE NOTED.
4. BACKFILLING AGAINST FOUNDATION WALLS SHALL BE DONE CAREFULLY WITH SMALL COMPACTION EQUIPMENT, AFTER SLABS ON GROUND ARE IN PLACE AND CONCRETE HAS SET. NO TRUCKS, BULLDOZERS, ETC. SHALL BE ALLOWED CLOSER THAN 6'-0" TO ANY FOUNDATION WALL. ANY WALL 3'-0" OR HIGHER MUST BE BRACED DURING THE CONSTRUCTION PROCESS.
5. NO FOUNDATIONS SHALL BE PLACED ABOVE 1 VERTICAL ON 2 HORIZONTAL SLOPES EXTENDED FROM THE CLOSEST EDGE OF ANY UNDISTURBED SOIL OR OTHER FOUNDATION STRUCTURE. BOTTOM OF FOOTINGS SHALL NOT BE LESS THAN 1'-0" BELOW EXISTING GRADE (U.N.O.).
6. FOR FOUNDATIONS SIZE AND REINFORCING SEE SCHEDULE.
7. CONTRACTOR SHALL TREAT SOIL BENEATH BUILDING FOR TERMITES.

MASONRY:

1. DESIGN AND CONSTRUCTION SHALL CONFORM TO BUILDING CODE REQUIREMENTS FOR MASONRY STRUCTURES (ACI 530-13 / ASCE 5-13) / TMS 402-16 AND SPECIFICATIONS FOR MASONRY STRUCTURES ACI 530.1-13 / ASCE 6-13 (WITH ERRATA DATED JANUARY 10, 2011 / TMS 602-16).
2. MINIMUM NET COMPRESSIVE STRENGTH OF BLOCK ASSEMBLY SHALL BE 2000 P.S.I. (f'm) MORTAR FOR MASONRY SHALL BE TYPE "S" OR "M".
3. FOR ALL EXTERIOR AND INTERIOR BEARING, BED JOINTS ARE TO COVER 100% OF THE MASONRY SURFACES AND ALL HEAD JOINTS ARE TO COVER 100% OF THE PROJECTED AREA OF THE FACE SHELLS.
4. FILL ALL CELLS AS REQUIRED WITH 3000 P.S.I. GROUT. SLUMP SHALL BE 8 TO 11 INCHES. SUBMIT DESIGN MIX FOR APPROVAL.
5. MINIMUM HORIZONTAL JOINT REINFORCING SHALL BE 9 GAGE HOT DIP GALVANIZED TRUSS OR LADDER TYPE JOINT REINFORCING AT 16" O.C., PROVIDE MANUFACTURE "T" AND "L" SHAPES FOR INTERSECTIONS AND CORNERS. (MINIMUM LAP 8").
6. MINIMUM VERTICAL REINFORCING SHALL BE (1)-#5 @ 48" OR (1)-#4 @ 32" O.C., (U.N.O.).
7. PROVIDE ADDITIONAL VERTICAL REINFORCING BAR AT EVERY CORNER, INTERSECTION, CONTROL JOINT, AND OPENING EDGES (U.N.O.).
8. MINIMUM SPLICE FOR VERTICAL REINFORCING IS SHOWN IN DETAIL 4-023, SPLICE FOR HORIZONTAL JOINT REINFORCING = 12".
9. WALLS ARE DESIGNED TO BE BRACED BY FLOOR OR ROOF MEMBERS, CONTRACTOR SHALL PROVIDE TEMPORARY BRACING DURING CONSTRUCTION.
10. ALL CELLS BELOW FIRST FLOOR FINISHED ELEVATION MUST BE FULLY GROUT FILLED.
11. ALL KNOCK OUT BLOCK HORIZONTAL BARS SHALL HAVE CORNER BARS AT ALL CORNERS AND WALL INTERSECTIONS. SIZE AND NUMBER OF CORNER BARS SHALL BE SAME AS HORIZONTAL BARS.
12. ALL INTERSECTING WALLS AND CORNER WALLS SHALL BE LAID IN AN OVERLAPPING MASONRY BONDING PATTERN, WITH ALTERNATE UNITS HAVING A BEARING OF NOT LESS THAN 3 INCHES ON UNIT BELOW.

WOOD FRAMING NOTES:

1. ALL WOOD FRAMING SHALL BE IN COMPLIANCE WITH THE LATEST NDS EDITION FOR WOOD CONSTRUCTION. DIMENSIONED LUMBER SHALL BE DRESSED S4S, AND SHALL BEAR THE GRADE STAMP OF THE MANUFACTURER'S ASSOCIATION.
2. ALL LUMBER SHALL BE SOUND, SEASONED, AND FREE FROM WRAP.
3. ALL FRAMING LUMBER SHALL BE SOUTHERN YELLOW PINE #2 OR BETTER.
4. INTERIOR NON-LOAD BEARING WALLS SHALL BE UTILITY GRADE OR BETTER.
5. MINIMUM OF 3-PLY STUD COLUMNS TO BE INSTALLED AT BEAM OR GIRDER TRUSS BEARING LOCATIONS UNLESS NOTED OTHERWISE.
6. INSTALL BLOCKING IN ALL WALL STUDS OVER 8'-0" AT MID-HEIGHT, AND SHEATHING JOINT. BRACE GABLE END AT 4'-0" O.C. AS SHOWN IN THE DRAWINGS.
7. ALL LUMBER IN CONTACT WITH MASONRY OR CONCRETE SHALL BE PRESSURE TREATED OR OF NATURAL DURABLE WOOD.
8. PRESSURE TREATED LUMBER SHALL BE IMPREGNATED WITH AN APPROVED TREATMENT IN ACCORDANCE WITH F.S. 11-W-571 AND BARE THE AMERICAN WOOD PRESERVES INSTITUTE EQUALITY MARK LP-2.
9. SHEATHING SHALL BE APA EXTERIOR GRADE RATED, AND INSTALLED WITH PLY-CLIPS AT 24" O.C. SEE NAILING SCHEDULE FOR SHEATHING CONNECTION.
10. FLOOR SHEATHING SHALL BE A MINIMUM OF 5/8" TONGUE AND GROOVE TYPE SUPPORTED AT 24" O.C. MAX, UNLESS NOTED OTHERWISE IN PLAN.
11. ALL NAILING AND BOLTING SHALL COMPLY WITH AMERICAN INSTITUTE OF TIMBER CONSTRUCTION REQUIREMENTS. ALL NAILS EXPOSED TO THE EXTERIOR SHALL BE GALVANIZED.
12. ALL CONNECTION HARDWARE SHALL BE GALVANIZED AND SUPPLIED BY SIMPSON STRONG TIE OR APPROVED EQUAL. SUBMIT CUT SHEETS FOR ALL CONNECTION HARDWARE TO ENGINEER FOR APPROVAL. ALL NAIL HOLES SHALL BE FILLED OR AS REQUIRED BY THE MANUFACTURER TO ACHIEVE LOAD CAPACITY.
13. BRACING: TEMPORARY BRACING OF THE ROOF SYSTEM SHALL BE INSTALLED PER BCSI-13 RECOMMENDATIONS AND SHALL BE UTILIZED AS THE PERMANENT BRACING FOR THE ROOF SYSTEM, UNLESS NOTED OTHERWISE.
14. ALL WOOD FRAMING SHALL BE IN COMPLIANCE WITH THE LATEST NDS EDITION FOR WOOD CONSTRUCTION.

PRE-ENGINEERED WOOD PRODUCTS:

1. ALL PRE-ENGINEERED WOOD PRODUCTS SHALL BE VERIFIED BY TRUSS MANUFACTURER. TRUSS MANUFACTURER SHALL HAVE THE AUTHORITY TO MAKE SUBSTITUTIONS FOR PRODUCTS SPECIFIED ON THE PLANS DUE TO AVAILABILITY OR ECONOMICS. CHANGES SPECIFIED BY THE TRUSS MANUFACTURER SHALL CONTROL. CHANGES MADE AFTER TRUSS ENGINEERING HAS BEEN PROVIDED TO ENGINEER OF RECORD, MUST BE APPROVED BY THE ENGINEER OF RECORD.
2. FRAMING PLAN IS DIAGRAMMATIC IN NATURE AND IS PROVIDED FOR ILLUSTRATION PURPOSES ONLY. TRUSS MANUFACTURER TO PROVIDE SEPARATE LAYOUT AND TRUSS COMPONENT DESIGN SIGNED AND SEALED BY A FLORIDA REGISTERED PROFESSIONAL ENGINEER.
3. ALL PRE-ENGINEERED WOOD PRODUCTS ARE THE RESPONSIBILITY OF THE TRUSS MANUFACTURER. THE TRUSS ENGINEER IS A DELEGATED ENGINEER FOR THIS PROJECT, AND AS SUCH, IS RESPONSIBLE FOR THE VALIDITY OF THE COMPONENTS PROVIDED. FRAMING LAYOUTS SHOWN MAY BE CHANGED BY THE TRUSS MANUFACTURER. THE DELEGATE ENGINEER IS RESPONSIBLE FOR PROVIDING A FINAL SEALED SET OF ALL CALCULATIONS AND LAYOUTS FOR THIS PROJECT TO THE ENGINEER OF RECORD FOR REVIEW PRIOR TO MANUFACTURE OF SAID COMPONENTS. ENGINEER OF RECORD HAS NOT REVIEWED THE PRE-ENGINEERED TRUSS MANUFACTURER'S COMPONENTS AT THIS TIME AND RESERVES THE RIGHT TO MAKE ANY CHANGES AFTER SUCH INFORMATION HAS BEEN PROVIDED FOR REVIEW. CONTRACTOR, AS PROJECT COORDINATOR, SHALL BE RESPONSIBLE FOR INSURING INFORMATION REQUESTED ABOVE HAS BEEN SUBMITTED TO ENGINEER OF RECORD IN A TIMELY MANNER WHEN AVAILABLE.
4. ALL PRE-ENGINEERED TRUSSES TO BE DESIGNED USING THE MOST RECENT TPI CRITERIA. TRUSSES TO BE HANDLED AND INSTALLED USING MOST RECENT HIB RECOMMENDATIONS. TEMPORARY AND PERMANENT BRACING SHALL BE IN ACCORDANCE WITH BCSI-13 RECOMMENDATIONS UNLESS NOTED OTHERWISE, OR MORE STRINGENT CODE REQUIREMENTS APPLY. TRUSS ENGINEER IS RESPONSIBLE FOR INDICATING ALL TRUSS TO TRUSS CONNECTORS, ALL COMPONENTS TO BE DESIGNED FOR BOTH GRAVITY AND UPLIFT LOAD CASES, INCLUDING BEAM COMPONENTS.
5. UPON REVIEW, ENGINEER OF RECORD WILL PROVIDE A REVIEW LETTER INDICATING ANY CHANGE IN STRAPPING OR SUPPORT BASED ON THAT REVIEW. CONSTRUCTION COMMENCING PRIOR TO ENGINEER'S REVIEW IS SUBJECT TO MODIFICATION BASED ON REVIEW LETTER.

POST-INSTALLED ANCHORS

1. POST-INSTALLED ANCHORS SHALL ONLY BE USED WHERE SPECIFIED ON THE CONSTRUCTION DOCUMENTS. SPECIAL INSPECTIONS ARE REQUIRED PER THE PROVISIONS SET FORTH BELOW. CONTRACTOR TO CONTACT MANUFACTURER'S REPRESENTATIVE FOR PROPER PRODUCT INSTALLATION TRAINING ON INITIAL ANCHORS.
2. SUBSTITUTION REQUESTS, FOR PRODUCTS OTHER THAN THOSE SPECIFIED BELOW, SHALL BE SUBMITTED BY THE CONTRACTOR TO THE ENGINEER-OF-RECORD ALONG WITH CALCULATIONS THAT ARE PREPARED & SEALED BY A REGISTERED PROFESSIONAL ENGINEER. THE CALCULATIONS SHALL DEMONSTRATE THAT THE SUBSTITUTED PRODUCT IS CAPABLE OF ACHIEVING THE PERTINENT EQUIVALENT PERFORMANCE VALUES (MINIMUM) OF THE SPECIFIED PRODUCT USING THE APPROPRIATE DESIGN PROCEDURE AND/OR STANDARD(S) AS REQUIRED BY THE BUILDING CODE.
3. EXPANSION ANCHORS SHALL BE STUD TYPE WITH A SINGLE PIECE OF THREE SECTION WEDGE AND ZINC PLATED IN ACCORDANCE WITH ASTM B633. THE ANCHORS SHALL MEET FEDERAL SPECIFCATION FF-S-325, GROUP II, TYPE 4, CLASS I FOR CONCRETE EXPANSION ANCHORS. ANCHORS SHALL BE HILTI KWIK BOLT 3 AS SUPPLIED BY HILTI INC. TULSA OKLAHOMA. ANCHORS SHALL BE INSTALLED IN HOLES DRILLED WITH HILTI CARBIDE TIPPED DRILL BITS OR MATCHED TOLERANCE DIAMOND CORE BITS. ANCHORS SHALL BE INSTALLED IN ACCORDANCE WITH MANUFACTURE'S RECOMMENDATIONS.
4. INJECTED ADHESIVE ANCHORS SHALL BE USED FOR INSTALLATION OF THREADED RODS. ADHESIVE SHALL BE FURNISHED IN A SIDE BY SIDE REFILL PACK WHICH KEEP COMPONENT A AND B SEPARATE. INJECTION ADHESIVE SHALL BE HILTI HIT HY 200 AS SUPPLIED BY HILTI INC. TULSA OKLAHOMA. ANCHOR RODS MEET ASTM F1554 (36 KSI). NUTS AND WASHERS SHALL BE FURNISHED TO MEET THE REQUIREMENTS OF AN ASTM F1554 (36 KSI) STEEL ROD.

DELEGATED DESIGN

1. SELECT SCOPE ITEMS IN THE PROJECT ARE CUSTOM DESIGNED AND ENGINEERED. THE ENGINEERING RESPONSIBILITY IS DELEGATED TO THE CONTRACTOR AND RELATED SUBCONTRACTORS.
2. CONTRACTOR SHALL SUBMIT SIGNED AND SEALED SHOP DRAWINGS FOR SUCH ELEMENTS DESIGNATED TO BE DESIGNED BY A DELEGATED ENGINEER.
3. DELEGATED ENGINEERING WILL ADDRESS ALL LOADING REQUIREMENTS INCLUDING WIND PRESSURES IN ACCORDANCE WITH THE LATEST FLORIDA BUILDING CODE. REFER TO THE COMPONENTS AND CLADDING PRESSURES PROVIDED FOR DESIGN PRESSURES ELEMENTS SHALL BE IN CONFORMANCE WITH.
4. DELEGATED ENGINEERED DRAWINGS SHALL DEFINE MATERIAL THICKNESS, SIZING, CONNECTIONS, ETC. OF THE SUBMITTED SYSTEM.
5. DELEGATED ENGINEERED DRAWINGS WILL BE REVIEWED AS PART OF THE SUBMITTAL PROCESS.
6. BUILDING COMPONENTS THAT ARE NOT SPECIFIED AS DELEGATED TO OTHER ENGINEERS SHALL BE SUBMITTED WITH APPROPRIATE FLORIDA PRODUCT APPROVAL INFORMATION IN THE SUBMITTAL. WHERE A FLORIDA PRODUCT APPROVAL DOES NOT EXIST FOR A COMPONENT REQUIRING APPROVAL, THE DESIGN SHALL BE DELEGATED TO AN ENGINEER ON THE CONTRACTOR'S TEAM.

STRUCTURAL SHEET INDEX

Sheet Number	Sheet Name
S1.1	GENERAL STRUCTURAL NOTES
S1.2	WIND DESIGN DATA AND LOAD SCHEDULE
S2.1	FOUNDATION PLAN
S2.2	SLAB ON GRADE PLAN
S2.3	ROOF FRAMING PLAN
S3.1	TYPICAL DETAILS
S3.2	TYPICAL DETAILS
S4.1	SECTIONS AND DETAILS
S4.2	SECTIONS AND DETAILS
S5.1	ELEVATIONS
S5.2	ELEVATIONS

1315 E. SEVENTH AVENUE
SUITE 106
TAMPA, FLORIDA 33605.3607

TELEPHONE 813.242.6677
FACSIMILE 813.242.6683

wilderarchitecture.com

AA26000655

WILDERARCHITECTURE, INC.

MASTER CONSULTING ENGINEERS, INC.
STRUCTURAL CONSULTANTS
5523 WEST CYPRESS ST., STE.200
TAMPA, FLORIDA 33607-1735
P | 813.287.3600 F | 813.287.3622

THIS DRAWING AND ALL INFORMATION CONTAINED HEREIN IS THE SOLE PROPERTY OF MASTER CONSULTING ENGINEERS, INC. AND MAY NOT BE REPRODUCED, COPIED, ALTERED OR USED IN ANY WAY WITHOUT THE EXPRESS WRITTEN AUTHORIZATION FROM MASTER CONSULTING ENGINEERS, INC.

CA: 8426 PROJ NO. 3099-047

HILLSBOROUGH COUNTY BOARD
OF COUNTY COMMISSIONERS
COUNTY CENTER
601 E KENNEDY BLVD
TAMPA, FL 33601

HILLSBOROUGH COUNTY
NORTHWEST AREA HEAD START

PROJECT #: 2010-00	
DISTRIBUTION	DATE
SCHEMATIC DESIGN	05.01.2020
DESIGN DEVELOPMENT	06.11.2020
90% CONST DOCS	08.19.2020

GENERAL STRUCTURAL NOTES

S1.1

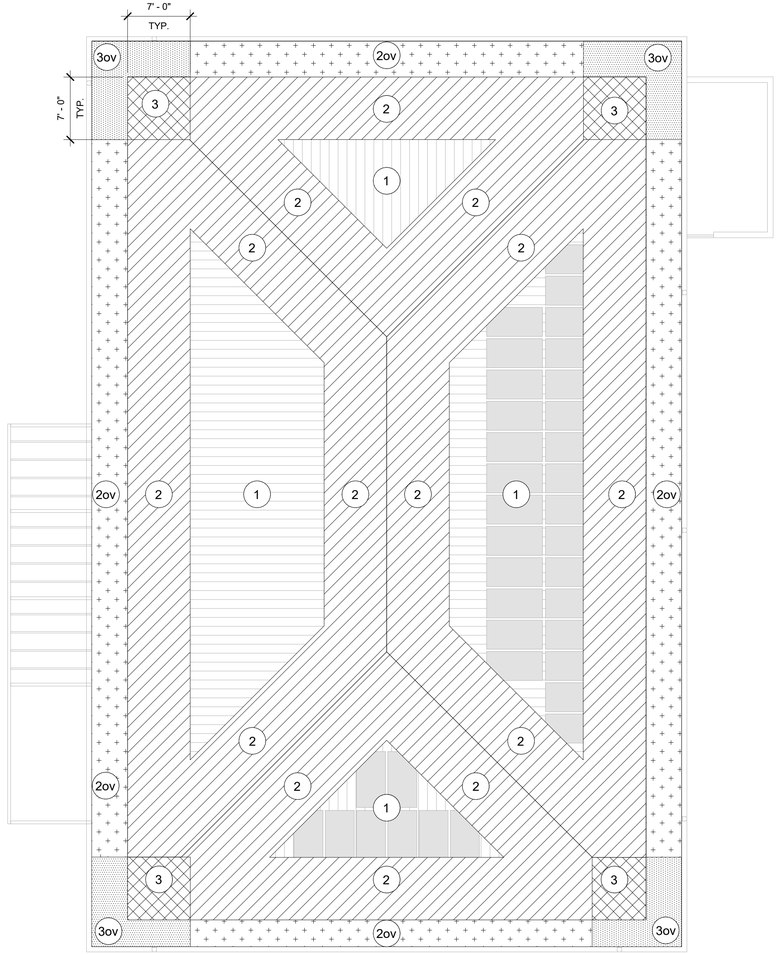

ROOF PRESSURE PLAN

SCALE: 1/8" = 1'-0"

LOAD SCHEDULE:

ROOF: DEAD LOAD = 30 PSF

LIVE LOAD = 20 PSF

50 PSF

WIND DESIGN DATA:

CODE:
ASCE 7-10 FLORIDA BUILDING CODE, (SIXTH EDITION) 2017.

BASIC WIND SPEED	142 mph (Vult) 110 mph (Vasd)
CATEGORY (RISK)	II
EXPOSURE	D
BUILDING HEIGHT	21 ft.
ENCLOSURE CLASSIFICATION	± 0.18

* GLAZED OPENINGS IN RISK CATEGORY II, III, IV LOCATED IN HURRICANE PRONE REGIONS SHALL BE PROTECTED IN ACCORDANCE WITH FBC 2017 SEC. 1609.1.2

COMPONENTS AND CLADDING (ULTIMATE) UPLIFT PRESSURE SCHEDULE

PATTERN	ZONE	MAIN ROOF EFFECTIVE WIND AREA				
		10 SQ. FT.	20 SQ. FT.	50 SQ. FT.	100 SQ. FT.	500 SQ. FT.
	1	+27 PSF/-66 PSF	+26 PSF/-65 PSF	+23 PSF/-62 PSF	+22 PSF/-61 PSF	+22 PSF/-61 PSF
	2	+27 PSF/-111 PSF	+26 PSF/-100 PSF	+23 PSF/-83 PSF	+22 PSF/-72 PSF	+22 PSF/-72 PSF
	3	+27 PSF/-167 PSF	+26 PSF/-139 PSF	+23 PSF/-100 PSF	+22 PSF/-72 PSF	+22 PSF/-72 PSF
	2' ov	-105 PSF	-104 PSF	-101 PSF	-100 PSF	-72 PSF
	3' ov	-167 PSF	-133 PSF	-89 PSF	-55 PSF	-55 PSF

COMPONENTS AND CLADDING
DESIGN WIND PRESSURE (ULTIMATE) FOR WALLS, DOORS & WINDOWS

PATTERN	ZONE	EFFECTIVE WIND AREA				
		10 SQ. FT.	20 SQ. FT.	50 SQ. FT.	100 SQ. FT.	500 SQ. FT.
	4	+66 PSF/-72 PSF	+63 PSF/-69 PSF	+61 PSF/-66 PSF	+55 PSF/-61 PSF	+50 PSF/-55 PSF
	5	+66 PSF/-89 PSF	+63 PSF/-83 PSF	+61 PSF/-77 PSF	+55 PSF/-72 PSF	+50 PSF/-55 PSF

NOTE:

1. ALL EXTERIOR DOORS & WINDOW ASSEMBLIES SHALL SATISFY THE REQUIREMENTS OF THE FLORIDA BUILDING CODE (SIXTH EDITION 2017, SECTION 1709.5). ALL CONNECTIONS TO BUILDING STRUCTURE SHALL HAVE THE CAPACITY TO WITHSTAND THE PRESSURES INDICATED IN THIS SCHEDULE.
2. PLUS AND MINUS SIGNS SIGNIFY PRESSURES ACTING TOWARD AND AWAY FROM THE SURFACES, RESPECTIVELY.
3. ALL WIND PRESSURE VALUES INDICATED ARE IN POUNDS PER SQUARE FOOT (PSF). MULTIPLY ULTIMATE WIND PRESSURE BY 0.60 FOR ASD PRESSURE.

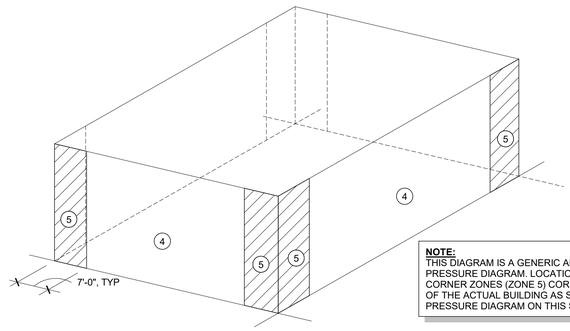

NOTE:
THIS DIAGRAM IS A GENERIC AND SIMPLIFIED WALL PRESSURE DIAGRAM. LOCATION AND WIDTH OF CORNER ZONES (ZONE 5) CORRESPOND TO ZONE 3 OF THE ACTUAL BUILDING AS SHOWN IN THE ROOF PRESSURE DIAGRAM ON THIS SHEET.

WALL PRESSURES DIAGRAM

SCALE: 1/8" = 1'-0"

1315 E. SEVENTH AVENUE
SUITE 106
TAMPA, FLORIDA 33605.3607

TELEPHONE 813.242.6677
FACSIMILE 813.242.6683

wilderarchitecture.com

AA26000655

WILDERARCHITECTURE, INC.

MASTER CONSULTING ENGINEERS, INC.
STRUCTURAL CONSULTANTS
5523 WEST CYPRESS ST., STE.200
TAMPA, FLORIDA 33607-1735
P | 813.287.3600 F | 813.287.3622

THIS DRAWING AND ALL INFORMATION CONTAINED HEREIN IS THE SOLE PROPERTY OF MASTER CONSULTING ENGINEERS, INC. AND MAY NOT BE REPRODUCED, COPIED, ALTERED OR USED IN ANY WAY WITHOUT THE EXPRESS WRITTEN AUTHORIZATION FROM MASTER CONSULTING ENGINEERS, INC.

CA: 8426 PROJ NO. 3099-047

HILLSBOROUGH COUNTY BOARD
OF COUNTY COMMISSIONERS
COUNTY CENTER
601 E KENNEDY BLVD
TAMPA, FL 33601

HILLSBOROUGH COUNTY
NORTHWEST AREA HEAD START

PROJECT #: 2010-00

DISTRIBUTION	DATE
SCHEMATIC DESIGN	05.01.2020
DESIGN DEVELOPMENT	06.11.2020
90% CONST DOCS	08.19.2020

WIND DESIGN DATA AND LOAD SCHEDULE

S1.2

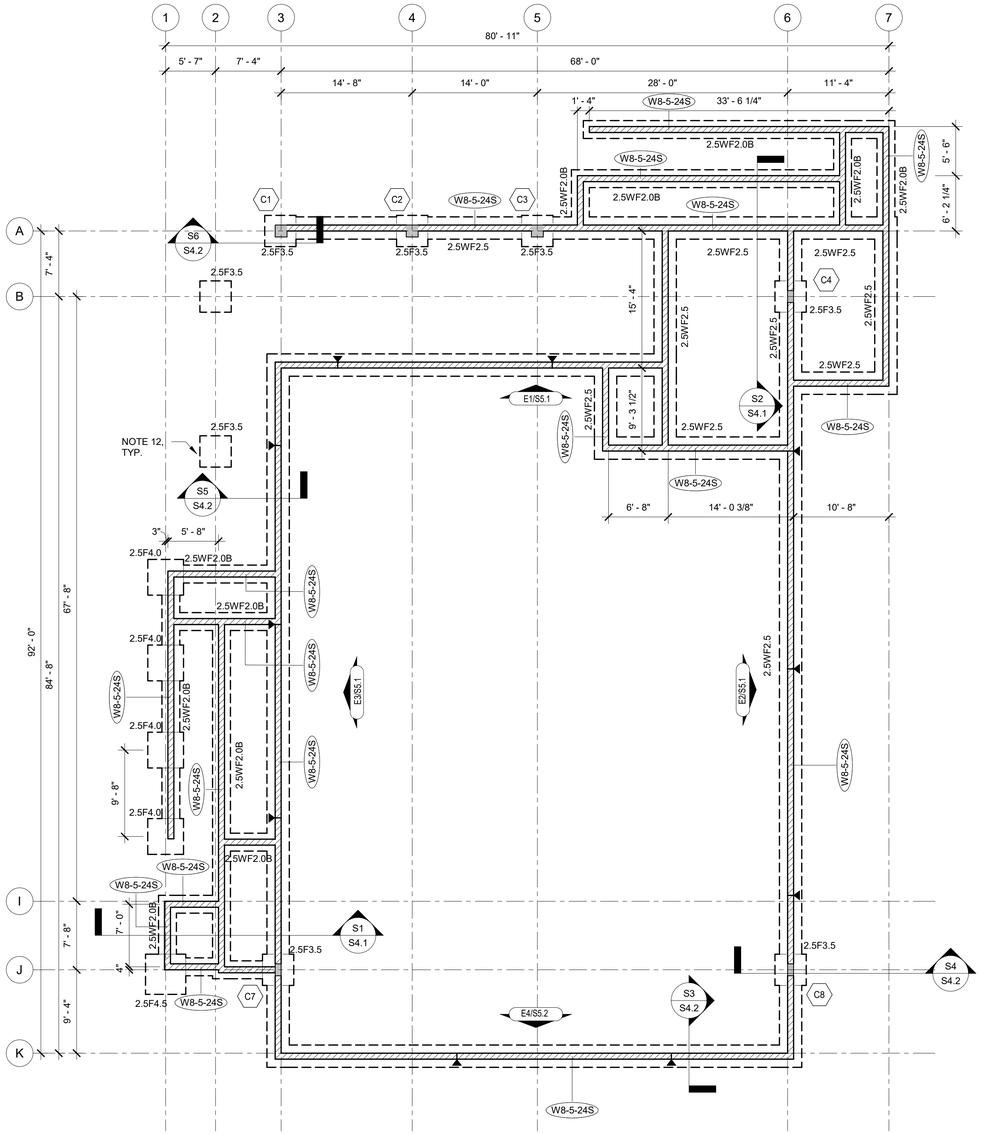

N

0 4' 8' 16'

FOUNDATION PLAN
1/8" = 1'-0"

A5

FOUNDATION PLAN NOTES:

1. FOR TYPICAL FOUNDATION PLAN DETAILS, SEE DRAWINGS S3.1 & S3.2.
2. FOR GENERAL STRUCTURAL NOTES, SEE DRAWING S1.1.
3. FOR FOOTING SIZE AND REINFORCING, SEE SCHEDULE ON THIS DRAWING.
4. ( ) DENOTES TOP OF FOOTING ELEVATION.
5. TOP OF FOOTING: ELEVATION @ INTERIOR = (-2' - 0")
   TYPICAL U.N.O.
   ELEVATION @ EXTERIOR = (-2' - 0")
   TYPICAL U.N.O.
6. FOR PLAN DIMENSIONS NOT SHOWN, REFER TO ARCHITECTURAL DRAWINGS.
7. TYPICAL WALL REINFORCING SCHEDULE:

   A. FOR CMU EXTERIOR WALL REINFORCING, SEE SCHEDULE THIS SHEET.
   B. ■ INDICATES ADDITIONAL (1) VERTICAL IN GROUT FILLED CELL.
   C. PROVIDE ADDITIONAL (1) VERTICAL IN FIRST (2) CELLS EACH SIDE OF ALL WALL OPENINGS, CORNERS AND INTERSECTIONS.

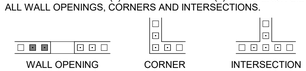

8. COLUMN DESIGNATION SHOWN THUS ⬡ ON PLAN. FOR SIZE AND REINFORCING SEE SCHEDULE ON DRAWING S5.2.

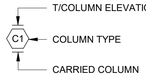

9. ALL CMU WALLS SHALL BE REINFORCED AS SHOWN ON PLAN WITH DOWELS TO MATCH, U.N.O. ALL CELLS AT REINFORCING LOCATION SHALL BE FILLED WITH GROUT. PROVIDE INSPECTION/CLEANOUT HOLE AT BASE WHEN POUR HEIGHT IS GREATER THAN 4'-0".
10. WHERE FOOTING MARK NUMBER HAS A SUFFIX B, I.E., WF5.0B, THE REINFORCING INDICATED SHALL BE APPLIED TO BOTTOM OF FOOTING ONLY.
11. MASONRY CONTROL JOINT SHOWN THUS ◄ MCJ ON PLAN. MAXIMUM SPACING OF JOINTS = 24' - 0". COORDINATE LOCATION WITH THE ARCH. & STRUCT WALL ELEVATIONS. DO NOT LOCATE A MCJ CLOSER THAN 24" TO ANY CMU OPENING.
12. CANOPY FOUNDATIONS TO BE COORDINATED WITH COVERED CANOPY SHOP DRAWINGS.

COLUMN FOOTING SCHEDULE

MARK*	LENGTH	WIDTH	THICKNESS	TOP & BOTT. REINF.* EA. WAY U.N.O.	REMARKS
2.5F3.5	3' - 6"	3' - 6"	1' - 6"	4-#5	
2.5F4.0	4' - 0"	4' - 0"	1' - 6"	5-#5	
2.5F4.5	4' - 6"	4' - 6"	1' - 6"	6-#5	

WALL FOOTING SCHEDULE

MARK*	WIDTH	THICKNESS	TOP & BOTT. REINF. CONT.	TOP & BOTT. REINF. TRANSV.	REMARKS
2.5WF2.0B	2' - 0"	1' - 4"	3-#5	#4 @ 24"	SEE NOTE 10
2.5WF2.5	2' - 6"	1' - 4"	3-#5	#4 @ 16"	SEE NOTE 10

WALL SCHEDULE

TYPE	DESCRIPTION
W8-5-24S	8" CMU WALL REINF. W/ #5 AT 24" O.C.

1315 E. SEVENTH AVENUE
SUITE 106
TAMPA, FLORIDA 33605.3607

TELEPHONE 813.242.6677
FACSIMILE 813.242.6683

wilderarchitecture.com

AA26000655

WILDERARCHITECTURE, INC.

MASTER CONSULTING ENGINEERS, INC.
STRUCTURAL CONSULTANTS
5523 WEST CYPRESS ST., STE.200
TAMPA, FLORIDA 33607-1735
P | 813.287.3600 F | 813.287.3622

THIS DRAWING AND ALL INFORMATION CONTAINED HEREIN IS THE SOLE PROPERTY OF MASTER CONSULTING ENGINEERS, INC. AND MAY NOT BE REPRODUCED, COPIED, ALTERED OR USED IN ANY WAY WITHOUT THE EXPRESS WRITTEN AUTHORIZATION FROM MASTER CONSULTING ENGINEERS, INC.

CA: 8426 PROJ NO. 3099-047

HILLSBOROUGH COUNTY BOARD
OF COUNTY COMMISSIONERS
COUNTY CENTER
601 E KENNEDY BLVD
TAMPA, FL 33601

HILLSBOROUGH COUNTY
NORTHWEST AREA HEAD START

PROJECT #: 2010-00

DISTRIBUTION	DATE
SCHEMATIC DESIGN	05.01.2020
DESIGN DEVELOPMENT	06.11.2020
90% CONST DOCS	08.19.2020

FOUNDATION PLAN

S2.1

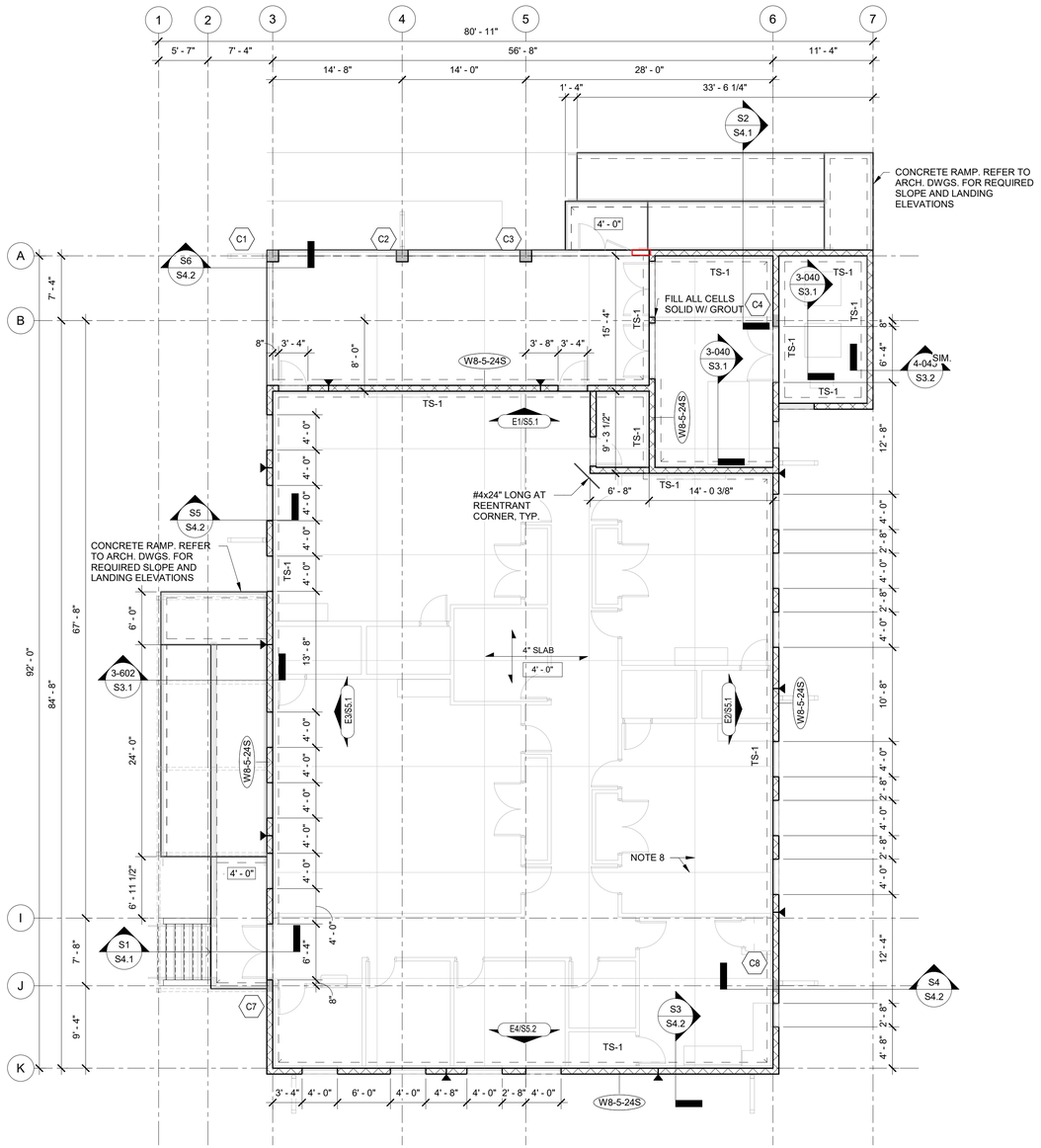

SLAB ON GRADE PLAN NOTES:

1. SLAB ON GRADE TO BE 4" THICK CONCRETE OVER VAPOR BARRIER ON COMPACTED SUB-BASE AS PER GEOTECHNICAL REPORT REINFORCED WITH 6x6xW2.1xW2.1 W.W.F. (FLAT SHEETS) CENTERED IN SLAB. SUPPORT WELDED WIRE FABRIC WITH 2" SLAB BOLSTER OR APPROVED EQUAL @ 3'-0"(±) O.C. BOTH WAYS. USE OF CONCRETE BRICK IS NOT ALLOWED.
2. VAPOR BARRIER REQUIREMENTS/APPLICATION/INSTALLATION SHALL BE DONE AS PER ARCHITECTURAL OR MOISTURE CONSULTANT DOCUMENTS AND RECOMMENDATIONS. IF NONE ARE AVAILABLE, AT A MINIMUM THE FOLLOWING RECOMMENDATIONS SHALL BE FOLLOWED.
   - A. VAPOR BARRIER SHALL CONFORM TO ASTM E-1745 , MEETS OR EXCEEDS CLASS "S"
   - B. VAPOR BARRIER INSTALLATION SHALL FOLLOW MANUFACTURER'S INSTRUCTIONS AND ASTM E 1643-98.
   - C. UNROLL VAPOR BARRIER WITH THE LONGEST DIMENSION PARALLEL WITH THE DIRECTION OF THE POUR.
   - D. LAP VAPOR BARRIER OVER FOOTINGS AND SEAL TO FOUNDATION WALLS.
   - E. OVERLAP JOINTS 6 INCHES AND SEAL WITH MANUFACTURER'S TAPE.
   - F. SEAL ALL PENETRATIONS (INCLUDING PIPES) WITH MANUFACTURER'S PIPE BOOT.
   - G. NO PENETRATION OF THE VAPOR BARRIER IS ALLOWED EXCEPT FOR REINFORCING STEEL AND PERMANENT UTILITIES.
   - H. REPAIR DAMAGED AREAS BY CUTTING PATCHES OF VAPOR BARRIER, OVERLAPPING DAMAGED AREA 6 INCHES AND TAPING ALL FOUR SIDES WITH TAPE.
3. TOP OF SLAB ELEVATION SHOWN THUS -'-" ON PLAN EQUALS REFERENCE EL., FOR ACTUAL EL., SEE CIVIL DRAWINGS.
4. FOR GENERAL STRUCTURAL NOTES, SEE DRAWING S1.1.
5. FOR FLOOR SLAB DEPRESSION LOCATIONS AND LIMITS NOT SHOWN ON PLAN SEE ARCHITECTURAL DRAWINGS.
6. FOR PLAN DIMENSIONS NOT SHOWN, REFER TO ARCHITECTURAL DRAWINGS.
7. COLUMN DESIGNATION SHOWN THUS ⬡ ON PLAN. FOR SIZE AND REINFORCING SEE SCHEDULE ON DRAWING S5.2.

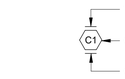

8. COORDINATE LOCATION OF (CJ) CONTROL JOINTS (SAWCUTS & TOOLED JOINTS) AT WALKWAY SLABS WITH ARCHITECTURAL DRAWINGS. CONTROL JOINTS AT EXPOSED TO WEATHER WALKWAYS SHALL BE TOOLED JOINTS SEE TYPICAL DETAIL 3-201 ON S3.2.
9. ALL CMU WALLS SHALL BE REINFORCED AS SHOWN ON PLAN WITH DOWELS TO MATCH, U.N.O. ALL CELLS AT REINFORCING LOCATION SHALL BE FILLED WITH GROUT. PROVIDE INSPECTION/CLEANOUT HOLE AT BASE WHEN POUR HEIGHT IS GREATER THAN 4'-0".
10. RAIN LEADER SHOWN THUS ⊗ R.L ON PLAN. SEE PLUMBING DRAWINGS FOR SIZE AND LOCATIONS.
11. GENERAL CONTRACTOR TO COORDINATE LOCATION OF ALL WALL PENETRATIONS REQUIRED FOR MECHANICAL EQUIPMENT AND PROVIDE A PRECAST LINTEL AT ALL OPENINGS REFER TO TYPICAL DETAIL 4-004 ON S3.2.
12. MASONRY CONTROL JOINT SHOWN THUS ⊣◀ MCJ ON PLAN. MAXIMUM SPACING OF JOINTS = 24' - 0", COORDINATE LOCATION WITH THE ARCH. & STRUCT WALL ELEVATIONS. DO NOT LOCATE A MCJ CLOSER THAN 24" TO ANY CMU OPENING. SEE TYPICAL DETAIL 4-002/S3.2

THICKENED SLAB SCHEDULE

MARK*	SIZE	THICKNESS	TOP & BOTT.* REINF. CONT.	TOP & BOTT.* REINF. TRANSV.	REMARKS
TS-1	0' - 8" x CONT.	0' - 8"	(2)-#5	N/A	

WALL SCHEDULE

TYPE	DESCRIPTION
W8-5-24S	8" CMU WALL REINF. W/ #5 AT 24" O.C.

CONCRETE BEAM SCHEDULE

MARK	BEAM WIDTH	BEAM DEPTH	CONT. REINFORCING	TIE REINFORCING	REMARKS
CB-1	8"	16"	(2) #5 T&B CONT.	#3 @ 6" O.C.	
CB-2	8"	24"	(2) #6 T&B CONT.	#3 @ 6" O.C.	

0 4' 8' 16'

SLAB ON GRADE PLAN
1/8" = 1'-0"

A5

1315 E. SEVENTH AVENUE
SUITE 106
TAMPA, FLORIDA 33605.3607

TELEPHONE 813.242.6677
FACSIMILE 813.242.6683

wilderarchitecture.com

AA26000655

WILDER ARCHITECTURE, INC.

MASTER CONSULTING ENGINEERS, INC.
STRUCTURAL CONSULTANTS
5523 WEST CYPRESS ST., STE.200
TAMPA, FLORIDA 33607-1735
P | 813.287.3600 F | 813.287.3622

THIS DRAWING AND ALL INFORMATION CONTAINED HEREIN IS THE SOLE PROPERTY OF MASTER CONSULTING ENGINEERS, INC. AND MAY NOT BE REPRODUCED, COPIED, ALTERED OR USED IN ANY WAY WITHOUT THE EXPRESS WRITTEN AUTHORIZATION FROM MASTER CONSULTING ENGINEERS, INC.

CA: 8426 PROJ NO. 3099-047

HILLSBOROUGH COUNTY BOARD OF COUNTY COMMISSIONERS
COUNTY CENTER
601 E KENNEDY BLVD
TAMPA, FL 33601

HILLSBOROUGH COUNTY
NORTHWEST AREA HEAD START

PROJECT #: 2010-00

DISTRIBUTION	DATE
SCHEMATIC DESIGN	05.01.2020
DESIGN DEVELOPMENT	06.11.2020
90% CONST DOCS	08.19.2020

SLAB ON GRADE PLAN

S2.2

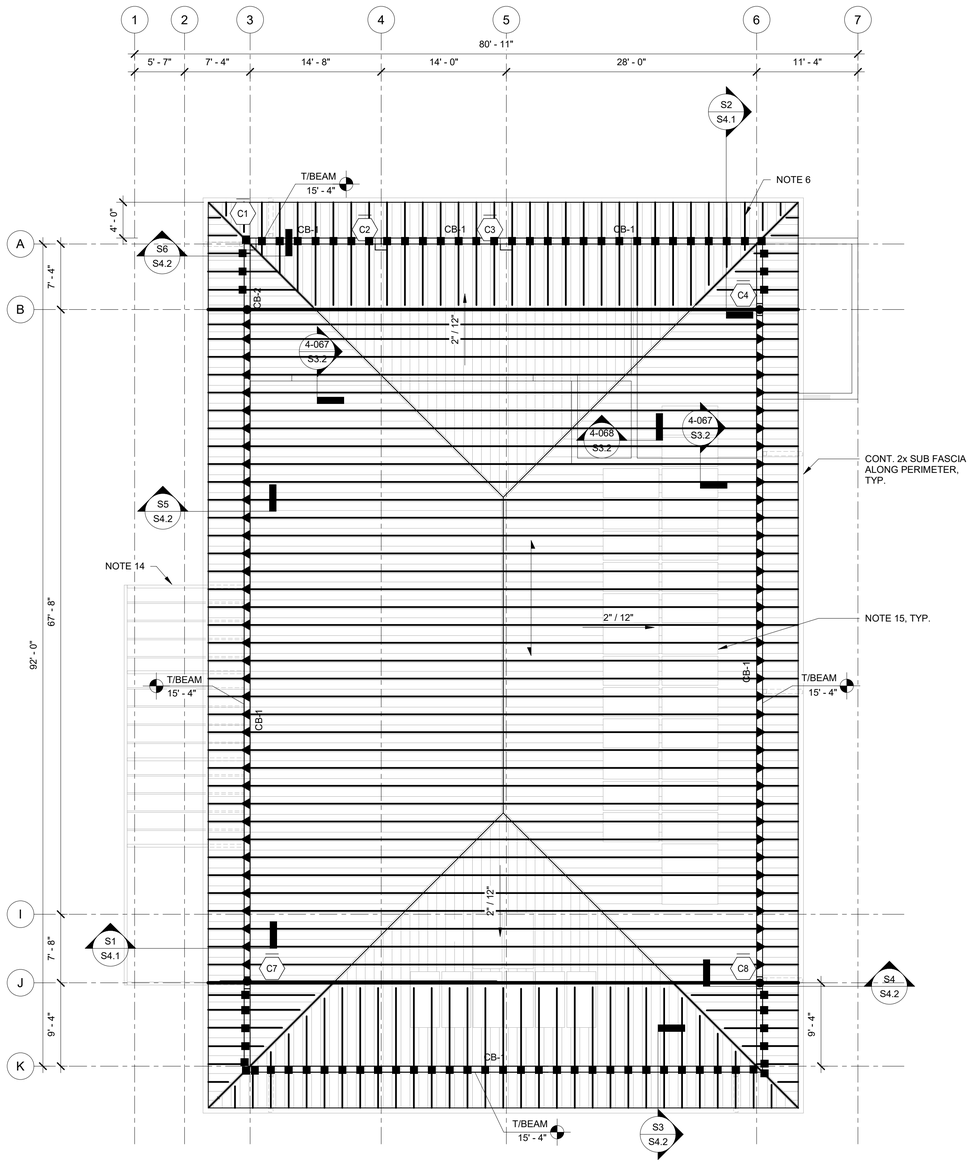

ROOF FRAMING NOTES:

1. ROOF FRAMING SHALL BE 19/32" (CDX) EXTERIOR GRADE STRUCTURAL PLYWOOD SHEATHING SPANNING OVER PRE-ENGINEERED/ PRE-FABRICATED WOOD TRUSSES SPACED AT 2'-0" ON CENTER (MAX.). REFER TO ARCHITECTURAL DRAWINGS FOR ROOF SLOPES AND FINISH.
2. DIRECTION OF PLYWOOD SHEATHING SPAN SHOWN THUS ◄——► ON PLAN.
3. FOR WIND DESIGN DATA AND ROOF LOAD SCHEDULE SEE DRAWING S1.2.
4. FOR TYPICAL DETAILS SEE DRAWINGS S3.1 THRU S3.3.
5. UNLESS OTHERWISE NOTED, FASTEN ALL STRUCTURAL ELEMENTS IN ACCORDANCE WITH THE INTERNATIONAL BUILDING CODE, 2017.
6. ROOF TRUSSES @ 2'-0" MAX. BY DELEGATED TRUSS SYSTEM ENGINEER. DELEGATED TRUSS DESIGNER TO DESIGN TRUSSES FOR THE UPLIFT FORCES SHOWN ON THE LOADING SCHEDULE AND PROVIDE CERTIFICATION THAT CHORD AND WEB MEMBERS HAVE BEEN DESIGNED FOR LOAD REVERSAL STRESSES DUE TO UPLIFT FORCES.
7. TRUSS MANUFACTURER SHALL HAVE THE OPTION TO CHANGE LOCATION OF TYPICAL ROOF TRUSSES. GIRDER TRUSS LOCATION SHALL REMAIN AS SHOWN ON PLAN. IF TRUSS DESIGNER CHANGES LOCATION OF GIRDERS, SUPPORT SECTIONS AND CONNECTIONS ARE SUBJECT TO CHANGE. SUBMIT TRUSS SHOP DRAWINGS AND CALCULATIONS WHICH ARE SIGNED AND SEALED BY A REGISTERED PROFESSIONAL ENGINEER IN THE STATE OF FLORIDA FOR REVIEW AND APPROVAL.
8. LOCATION OF PERMANENT AND TEMPORARY TRUSS BRACING NOT SHOWN AND SHALL BE DETERMINED AND DETAILED BY DELEGATED TRUSS DESIGNER WHO SIGNS AND SEALS THE ROOF TRUSS DRAWINGS. ALL BRACING SHALL BE SHOWN ON THE TRUSS DRAWINGS.
9. ALL TRUSS TO TRUSS CONNECTIONS SHALL BE DESIGNED BY THE DELEGATED REGISTERED PROFESSIONAL ENGINEER WHO SIGNS AND SEALS THE ROOF TRUSS DRAWINGS AND SHALL BE NOTED AND LOCATED ON THE TRUSS DRAWINGS.
10. FOR PLAN AND OVERHANG DIMENSIONS NOT SHOWN, SEE ARCHITECTURAL DRAWINGS.
11. ALL PRE-ENGINEERED TRUSS CONNECTIONS TO STRUCTURE SHOWN ARE SUBJECT TO CHANGE UPON RECEIPT OF TRUSS SHOP DRAWINGS AND CALCULATIONS.
12. COORDINATE ALL HORIZONTAL AND VERTICAL OPENING LOCATIONS IN TRUSSES WITH MECHANICAL AND ARCHITECTURAL DRAWINGS FOR HORIZONTAL PENETRATIONS.
13. COORDINATE ROOF SHAPE, DIMENSIONS, AND SLOPE WITH ARCH. ROOF DRAWINGS.
14. ALUMINUM CANOPY BY DELEGATED ENGINEER. PROVIDE CALCULATIONS AND SHOP DRAWINGS SIGNED AND SEALED BY A PROFESSIONAL ENGINEER REGISTERED IN THE STATE OF FLORIDA.
15. SOLAR PANEL BY OTHERS. ALL EXTERIOR SOLAR PANELS ASSEMBLIES SHALL SATISFY THE REQUIREMENTS OF THE FLORIDA BUILDING CODE (2017 EDITION), SECTION 1715.5 ALL CONECTIONS TO BUILDING STRUCTURE SHALL HAVE THE CAPACITY TO WITHSTAND THE PRESSURES INDICATED IN THE WIND LOAD SCHEDULE

CONCRETE BEAM SCHEDULE

MARK	BEAM WIDTH	BEAM DEPTH	CONT. REINFORCING	TIE REINFORCING	REMARKS
CB-1	8"	16"	(2) #5 T&B CONT.	#3 @ 6" O.C.	
CB-2	8"	24"	(2) #6 T&B CONT.	#3 @ 6" O.C.	

CONNECTOR SCHEDULE

MARK	APPLICATION	QUANTITY	MANUFACTURER	MODEL NUMBER	FASTENERS
▲	TRUSS TO CMU / CONC. BEAM	2	SIMPSON	META16	(6) 16d TO TRUSS EMBED TO TIE-BEAM
●	MAIN GIRDER TO CONC. COLUMN	1	SIMPSON	HGT-2	(16)-10d TO TRUSS (2) 3/4"Ø ANCHORS TO CONC. COLUMN
■	TRUSS TO CMU / CONC. BEAM	1	SIMPSON	META 16	(8)-10d X 1-1/2" TO TRUSS EMBED TO TIE-BEAM

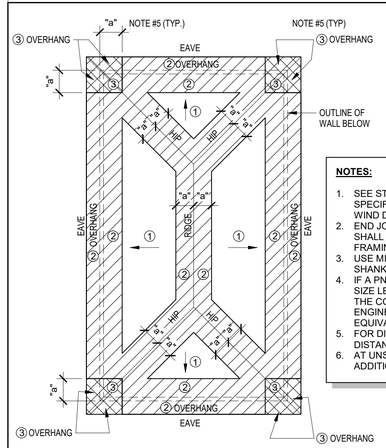

NOTES:

1. SEE STRUCTURAL NOTES FOR SHEATHING SPECIFICATIONS AND DRAWING S1.2 FOR WIND DESIGN DATA.
2. END JOINTS OF THE ROOF SHEATHING SHALL BE STAGGERED AND OCCUR OVER FRAMING MEMBER.
3. USE MINIMUM OF 10d COMMON OR 8d RING SHANK NAILS.
4. IF A PNEUMATIC NAILER WITH FASTENER SIZE LESS THAN .131"Ø x 2 1/2" IS USED. THE CONTRACTOR MUST CONTACT THE ENGINEER OF RECORD FOR AN EQUIVALENT NAIL SPACING.
5. FOR DIMENSION "a" MINIMUM EDGE DISTANCE REFER TO WIND DESIGN DATA.
6. AT UNSUPPORTED PANEL EDGES PROVIDE ADDITIONAL 2X BLOCKING AS REQUIRED.

AREA #1 — SEE NOTE #3 AND MAIN ROOF TYPE 1 NAILING PATTERN.

AREA #2 — SEE NOTE #3 AND MAIN ROOF AND OVERHANGS TYPE②NAILING PATTERN.

AREA #3 — SEE NOTE #3 AND MAIN ROOF AND OVERHANGS TYPE③NAILING PATTERN.

ROOF SHEATHING FASTENING SCHEDULE

WIND VELOCITY (3-SECOND GUST)	PANEL LOCATION	ROOF FASTENING ZONE				
		MAIN ROOF			OVERHANG (EAVES)	
		①	②	③	②	③
142 mph f,g	SUPPORTED PANEL END AND EDGES	6	6	6	6	6
	PANEL FIELD	12	6	4	6	4

HIP ROOF SHEATHING - FASTENING SCHEDULE

6-002

N

0 4' 8' 16'

ROOF FRAMING PLAN
1/8" = 1'-0"

A5

1315 E. SEVENTH AVENUE
SUITE 106
TAMPA, FLORIDA 33605.3607

TELEPHONE 813.242.6677
FACSIMILE 813.242.6683

wilderarchitecture.com

AA26000655

WILDERARCHITECTURE, INC.

MASTER CONSULTING ENGINEERS, INC.
STRUCTURAL CONSULTANTS
5523 WEST CYPRESS ST., STE.200
TAMPA, FLORIDA 33607-1735
P | 813.287.3600 F | 813.287.3622

THIS DRAWING AND ALL INFORMATION CONTAINED HEREIN IS THE SOLE PROPERTY OF MASTER CONSULTING ENGINEERS, INC. AND MAY NOT BE REPRODUCED, COPIED, ALTERED OR USED IN ANY WAY WITHOUT THE EXPRESS WRITTEN AUTHORIZATION FROM MASTER CONSULTING ENGINEERS, INC.

CA: 8426 PROJ NO. 3099-047

HILLSBOROUGH COUNTY BOARD OF COUNTY COMMISSIONERS
COUNTY CENTER
601 E KENNEDY BLVD
TAMPA, FL 33601

HILLSBOROUGH COUNTY
NORTHWEST AREA HEAD START

PROJECT #: 2010-00

DISTRIBUTION	DATE
SCHEMATIC DESIGN	05.01.2020
DESIGN DEVELOPMENT	06.11.2020
90% CONST DOCS	08.19.2020

ROOF FRAMING PLAN

S2.3

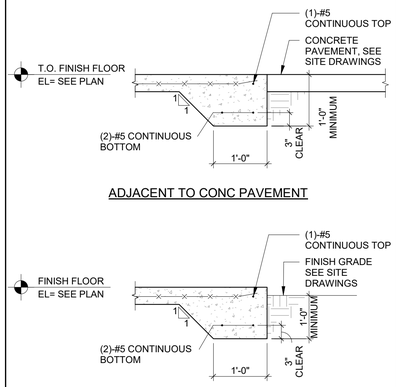

SLAB ON GRADE EDGE

3-007

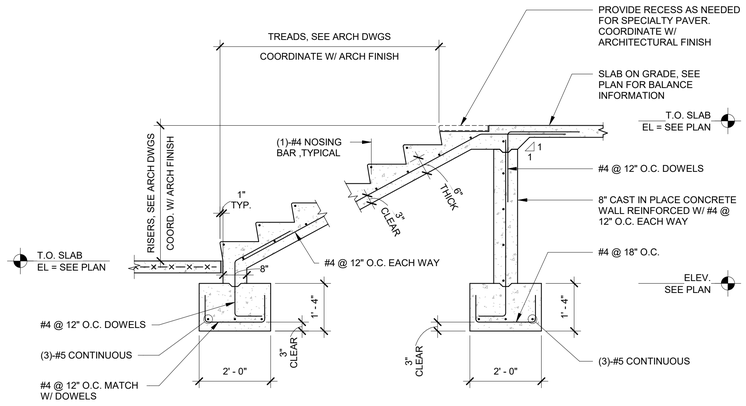

CONCRETE STAIR SECTION

3-027

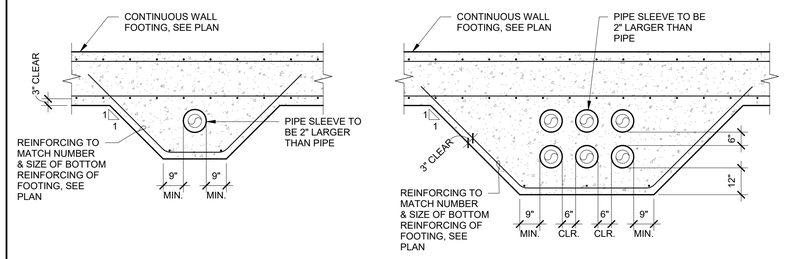

PIPE SLEEVE DETAIL AT FOUNDATION

3-054

NOTE:
IN CASE OF CONFLICT BETWEEN INFORMATION SHOWN ON THIS DRAWING, SECTION DRAWINGS OR ARCHITECTURAL DRAWINGS, IT IS THE CONTRACTOR'S RESPONSIBILITY TO INFORM THE ARCHITECT AND ENGINEER OF SUCH CONFLICT IN ORDER TO RECEIVE CLARIFICATION PRIOR TO CONSTRUCTION. THE CONTRACTOR SHALL BE RESPONSIBLE FOR ALL STRUCTURAL ELEMENTS SHOWN IN THIS DRAWING ARE MINIMUM TO BE USED UNLESS NOTED OTHERWISE (U.N.O.) IN PLANS.

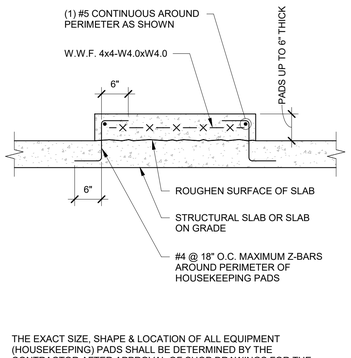

THE EXACT SIZE, SHAPE & LOCATION OF ALL EQUIPMENT (HOUSEKEEPING) PADS SHALL BE DETERMINED BY THE CONTRACTOR AFTER APPROVAL OF SHOP DRAWINGS FOR THE EQUIPMENT.

CONCRETE EQUIPMENT PAD DETAILS

3-040

f'c = 3000 PSI, NORMAL WEIGHT

BAR SIZE	LAP CLASS	TENSION LAP SPLICES				COMPRESSION LAP SPLICES
		LAP LENGTH PER SPACING AND COVER CASE				
		CASE 1		CASE 2		
		TOP BARS	OTHER BARS	TOP BARS	OTHER BARS	
#3	A	22	17	32	25	12
	B	28	22	42	32	
#4	A	29	22	43	33	15
	B	37	29	56	43	
#5	A	36	28	54	41	19
	B	47	36	70	54	
#6	A	43	33	64	50	23
	B	56	43	84	64	
#7	A	63	48	94	72	26
	B	81	63	122	94	
#8	A	72	55	107	82	30
	B	93	72	139	107	
#9	A	81	62	121	93	34
	B	105	81	157	121	
#10	A	91	70	136	105	38
	B	118	91	177	136	
#11	A	101	78	151	116	42
	B	131	101	196	151	

NOTES:

CASE 1

BEAMS AND COLUMNS:
CONCRETE COVER >/= TO BAR DIAMETER, C-C BAR SPACING >/= TO 2X BAR DIAMETER AND WITH STIRRUPS OR TIES THROUGHOUT TENSION LAP SPLICE LENGTH NOT LESS THAN THE CODE MINIMUM.

OTHER MEMBERS:
CONCRETE COVER >/= TO THE BAR DIAMETER AND C-C BAR SPACING >/= TO 3X BAR DIAMETER.

CASE 2

BEAMS AND COLUMNS:
CONCRETE COVER < BAR DIAMETER AND C-C BAR SPACING < 2X BAR DIAMETER.

OTHER MEMBERS:
CONCRETE COVER < BAR DIAMETER OR C-C BAR SPACING < 3X BAR DIAMETER.

* LAP CLASS "B" IS TO BE USED UNLESS OTHERWISE SPECIFIED IN THESE CONTRACT DOCUMENTS.

TENSION AND COMPRESSION LAP SPLICES WITH F'c = 3000 PSI

3-065

f'c = 4000 PSI, NORMAL WEIGHT

BAR SIZE	LAP CLASS	TENSION LAP SPLICES				COMPRESSION LAP SPLICES
		LAP LENGTH PER SPACING AND COVER CASE				
		CASE 1		CASE 2		
		TOP BARS	OTHER BARS	TOP BARS	OTHER BARS	
#3	A	19	15	28	22	12
	B	24	19	36	28	
#4	A	25	19	37	29	15
	B	32	25	48	37	
#5	A	31	24	47	36	19
	B	40	31	60	47	
#6	A	37	29	56	43	23
	B	48	37	72	56	
#7	A	54	42	81	63	26
	B	70	54	106	81	
#8	A	62	48	93	71	30
	B	80	62	121	93	
#9	A	70	54	105	81	34
	B	91	70	136	105	
#10	A	79	61	118	91	38
	B	102	79	153	118	
#11	A	87	67	131	101	42
	B	113	87	170	131	

NOTES:

CASE 1

BEAMS AND COLUMNS:
CONCRETE COVER >/= TO BAR DIAMETER, C-C BAR SPACING >/= TO 2X BAR DIAMETER AND WITH STIRRUPS OR TIES THROUGHOUT TENSION LAP SPLICE LENGTH NOT LESS THAN THE CODE MINIMUM.

OTHER MEMBERS:
CONCRETE COVER >/= TO THE BAR DIAMETER AND C-C BAR SPACING >/= TO 3X BAR DIAMETER.

CASE 2

BEAMS AND COLUMNS:
CONCRETE COVER < BAR DIAMETER AND C-C BAR SPACING < 2X BAR DIAMETER.

OTHER MEMBERS:
CONCRETE COVER < BAR DIAMETER OR C-C BAR SPACING < 3X BAR DIAMETER.

* LAP CLASS "B" IS TO BE USED UNLESS OTHERWISE SPECIFIED IN THESE CONTRACT DOCUMENTS.

TENSION AND COMPRESSION LAP SPLICES WITH F'c = 4000 PSI

3-066

THE MINIMUM CLEAR COVER FOR REINFORCEMENT BARS SHALL BE ONE BAR DIAMETER OR THE VALUES TABULATED BELOW, WHICHEVER IS THE GREATER.		
SLABS (LT.WT. CONC. OR STONE CONC.)		1"
GIRDERS AND BEAMS (TO STIRRUPS)		1 1/2"
JOISTS (STONE OR LT.WT.) BOTTOM BARS		1 1/4"
TIED COLUMNS AND PIERS		
SURFACE EXPOSED TO EARTH AND WEATHER	(TO TIES)	2"
OTHER SURFACES	(TO TIES)	1 1/2"
FOUNDATION ELEMENTS		
FORMED SURFACES		2"
SURFACES PLACED AGAINST EARTH		3"
WALLS		
SURFACES EXPOSED TO EARTH		2"
SURFACES EXPOSED TO WEATHER		1 1/2"
OTHER SURFACES		1"

TYPICAL CONCRETE COVER FOR REINFORCING BARS

3-064

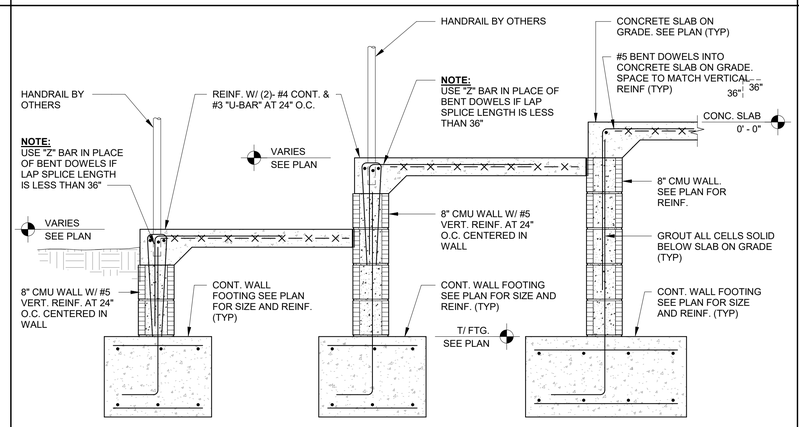

TYPICAL CONCRETE RAMP WITHOUT CURBS

3-602

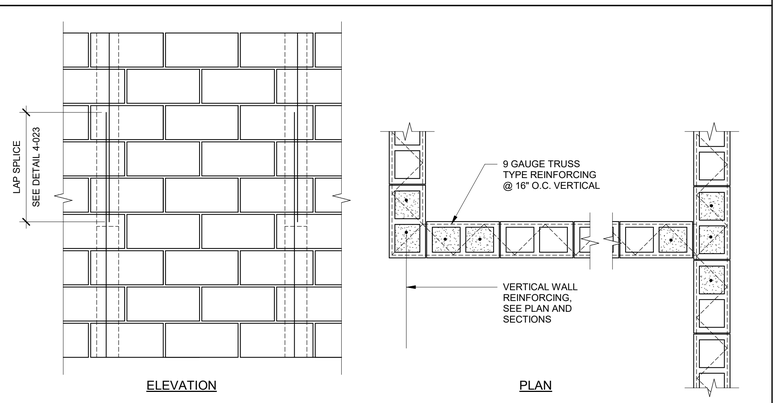

NOTE:

PROVIDE INSPECTION PORT AT BOTTOM OF LIFT GREATER THAN 4' - 0" IN HEIGHT.

TYP MASONRY WALL DETAIL

4-001

1315 E. SEVENTH AVENUE
SUITE 106
TAMPA, FLORIDA 33605.3607

TELEPHONE 813.242.6677
FACSIMILE 813.242.6683

wilderarchitecture.com

AA26000655

WILDERARCHITECTURE, INC.

MASTER CONSULTING ENGINEERS, INC.
STRUCTURAL CONSULTANTS
5523 WEST CYPRESS ST., STE.200
TAMPA, FLORIDA 33607-1735
P | 813.287.3600 F | 813.287.3622

THIS DRAWING AND ALL INFORMATION CONTAINED HEREIN IS THE SOLE PROPERTY OF MASTER CONSULTING ENGINEERS, INC. AND MAY NOT BE REPRODUCED, COPIED, ALTERED OR USED IN ANY WAY WITHOUT THE EXPRESS WRITTEN AUTHORIZATION FROM MASTER CONSULTING ENGINEERS, INC.

CA: 8426 PROJ NO. 3099-047

HILLSBOROUGH COUNTY BOARD OF COUNTY COMMISSIONERS
COUNTY CENTER
601 E KENNEDY BLVD
TAMPA, FL 33601

HILLSBOROUGH COUNTY
NORTHWEST AREA HEAD START

PROJECT #: 2010-00

DISTRIBUTION	DATE
SCHEMATIC DESIGN	05.01.2020
DESIGN DEVELOPMENT	06.11.2020
90% CONST DOCS	08.19.2020

TYPICAL DETAILS

S3.1

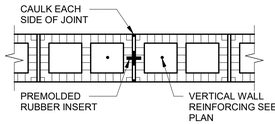

MASONRY CONTROL AT REGULAR BLOCKS
NOTE: DISCONTINUE HORIZONTAL REINFORCING AT JOINT

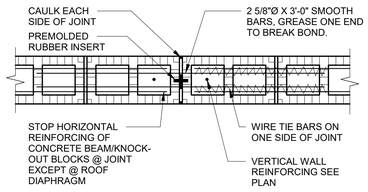

MASONRY CONTROL AT CONC. BEAM/KNOCK-OUT BLOCKS
NOTE: DISCONTINUE HORIZONTAL REINFORCING AT JOINT

NOTE:
1. MAXIMUM SPACING OF CONTROL JOINT EQUALS 24'-0" OR THREE TIMES WALL HEIGHT (WHICH EVER IS SMALLER)

MASONRY CONTROL JOINT

4-002

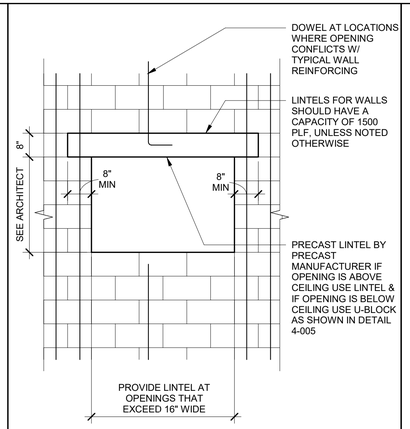

TYPICAL LINTEL OVER DUCT OPENING

4-004

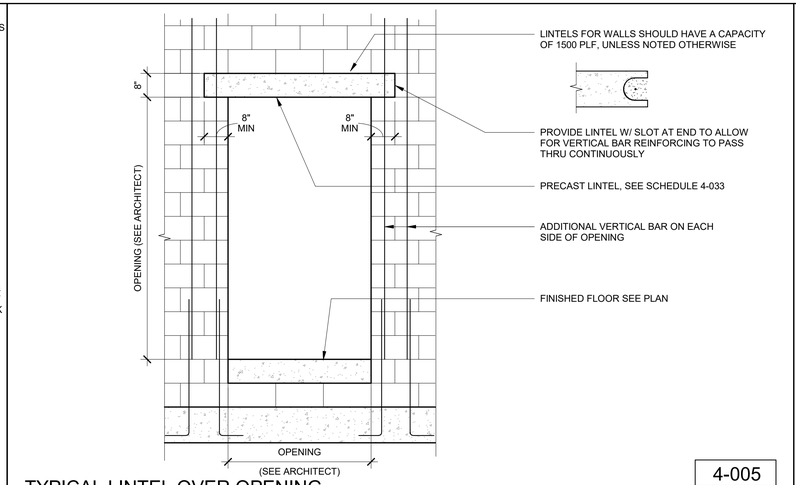

TYPICAL LINTEL OVER OPENING

4-005

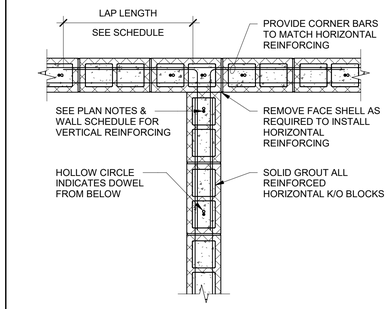

TYPICAL CMU K/O BLOCK REINFORCING LAYOUT

4-008

NOTE:
IN CASE OF CONFLICT BETWEEN INFORMATION SHOWN ON THIS DRAWING, SECTION DRAWINGS OR ARCHITECTURAL DRAWINGS, IT IS THE CONTRACTORS RESPONSIBILITY TO INFORM THE ARCHITECT AND ENGINEER OF SUCH CONFLICT IN DETAILS OR NOTES. FAILURE TO DO SO WILL RESULT IN THE CONTRACTOR BEING REQUIRED TO PERFORM ANY ADDITIONAL STRUCTURAL ELEMENTS SHOWN IN THIS DRAWING ARE MINIMUM TO BE USED UNLESS NOTED OTHERWISE (U.N.O.) IN PLANS.

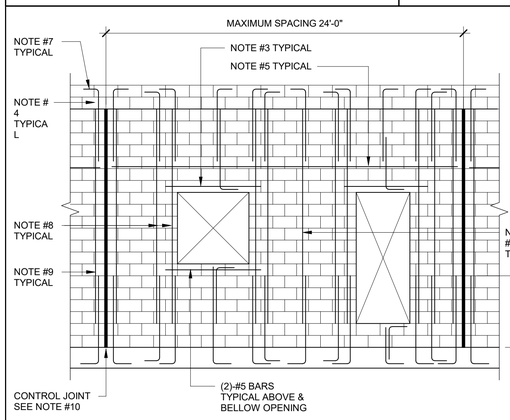

NOTES:
1. VERTICAL WALL REINFORCING SHALL ALIGN WITH VERTICAL FOUNDATION DOWELS. DOWELS SHALL BE PLACED AS SHOWN ON DETAILS WITH STANDARD ACI HOOK DIRECTLY ON TOP OF BOTTOM LAYER OF FOOTING REINFORCING. REFER TO CMU WALL REINFORCING SCHEDULE ON PLAN FOR SIZE AND SPACING.
2. TYPICAL VERTICAL WALL REINFORCING TO BE PLACED AS SHOWN ON DETAILS. GROUT CELLS FULL THAT CONTAIN REINFORCEMENT.
3. REFER TO CMU LINTEL SCHEDULE FOR SIZE, LOCATION AND QUANTITY OF LINTEL REINFORCEMENT.
4. VERTICAL REINFORCING BARS MAY BE SPLICED IN 6'-0" TO 8'-0" LENGTHS.
5. HORIZONTAL WALL REINFORCING SHALL BE TRUSS TYPE AT 16" O.C. ABOVE GRADE AND 8" O.C. BELOW GRADE UNLESS OTHERWISE NOTED ON PLANS AND DETAILS. DISCONTINUE AT CONTROL JOINTS.
6. CONTRACTOR SHALL USE THE LOW LIFT METHOD OF GROUTED MASONRY CONSTRUCTION UNLESS CLEAN OUTS ARE PROVIDED AT EACH VERTICAL REINFORCING BAR.
7. REFER TO PLANS AND DETAILS FOR SIZE AND LOCATION OF BOND BEAMS AND QUANTITY OF REINFORCING. LAP REINFORCING 24" MINIMUM. DISCONTINUE BOND BEAMS AT CONTROL JOINTS.
8. REFER TO LINTEL SCHEDULE NOTES FOR VERTICAL BARS ADJACENT TO OPENING.
9. PROVIDE VERTICAL WALL REINFORCING IN FIRST CELL NEXT TO CONTROL JOINTS/CORNERS/OPENINGS, TYPICAL.
10. VERTICAL CONTROL JOINTS SHALL TERMINATE AT TOP OF FOOTING.
11. PROVIDE CORNER BARS TO MATCH TYPE AND QUANTITY OF HORIZONTAL WALL REINFORCING, TYPICAL.

CMU WALL REINFORCING LAYOUT

4-009

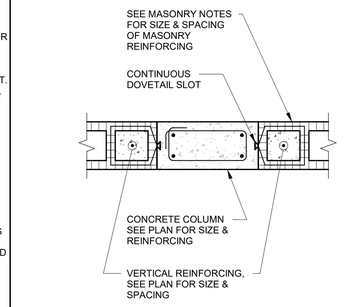

CONCRETE COLUMN TO MASONRY CONNECTION

4-022

LAP SPLICE SCHEDULE FOR SINGLE REINFORCED 8" CMU WALL		
BAR SIZE	LAP SPLICE	REMARKS
#3	18"	
#4	24"	
#5	30"	
#6	36"	

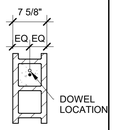

LAP SPLICE SCHEDULE SINGLE REINFORCED 8" CMU WALL

LAP SPLICE SCHEDULE FOR DOUBLE REINFORCED 8" CMU WALL		
BAR SIZE	LAP SPLICE	REMARKS
#3	18"	
#4	24"	
#5	30"	
#6	36"	

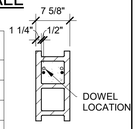

LAP SPLICE SCHEDULE DOUBLE REINFORCED 8" CMU WALL

4-023

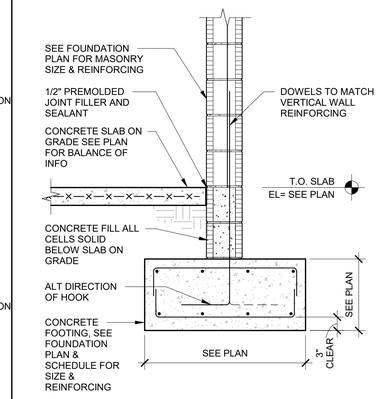

PARTIAL CMU WALL SECTION

4-012

CMU LINTEL SCHEDULE					
WALL THICKNESS	LINTEL DEPTH	BOTTOM REINFORCING	TOP REINFORCING	STIRRUPS & SPACING	NOTES
PCL-1	8"	(2) #5	-	-	-
PCL-2	16"	-	-	-	-
PCL-3	24"	-	-	-	-
CIPL-1	16"	(2) #5	(2) #5	#3 @ 8"	-
CIPL-2	24"	-	-	-	-
CIPL-3	32"	-	-	-	-

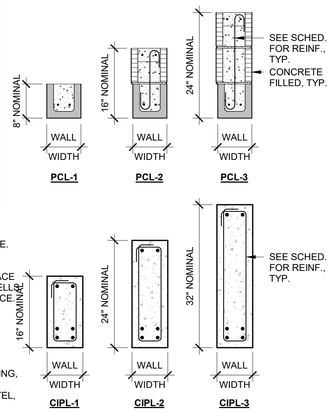

NOTES:
1. PRECAST CONCRETE LINTELS CAN BE INSTALLED AT ALL OPENINGS PER SCHEDULE. CAST IN PLACE CONCRETE LINTELS SHALL BE PLACED WHERE SHOWN ON PLANS. SUBSTITUTED UPON APPROVAL BY ENGINEER.
2. GROUTED LINTEL (THROUGH) BLOCKS SHALL EXTEND A MINIMUM OF 8" BEYOND FACE OF OPENING EACH SIDE UNLESS NOTED OTHERWISE. THE FIRST TWO VERTICAL CELLS EACH OF THE OPENING SHALL BE GROUTED AND CONTAIN 2-#5 VERTICAL EACH FACE.

   NOTE: THE FIRST CELL EACH SIDE OF THE OPENING SHALL BE GROUTED TO LINTEL LEVEL. SECOND CELL SHALL BE GROUTED TO ROOF LEVEL.
3. SEE SPECIFIC DETAIL FOR BRICK LEDGE SUPPORT ANGLE OF LOOSE LINTEL SCHEDULE.
4. CONSTRUCTION/CONTROL JOINT SHALL NOT BE LOCATED WITHIN WIDTH OF OPENING, NOR SHALL IT BE LOCATED WITHIN 24" OF THE OPENING ON EITHER SIDE.
5. CONCRETE LINTEL BEARING EACH SIDE OF LINTEL TO BE EQUAL TO DEPTH OF LINTEL, TYPICAL UNLESS NOTED OTHERWISE.

TYP. PRECAST/C.I.P. LINTEL DETAIL

4-033

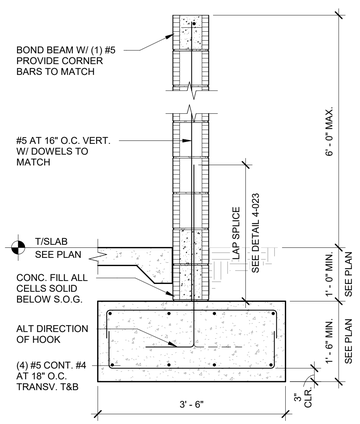

CMU SCREEN WALL

4-045

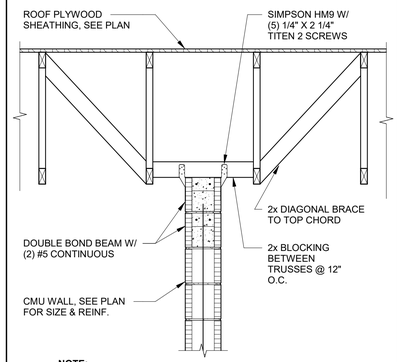

NOTE:
MAXIMUM SPACING OF WALL BRACING SHALL NOT EXCEED 1'-0" ON CENTER.

TYPICAL INTERIOR NON-BEARING WALL BRACE DETAIL

4-067

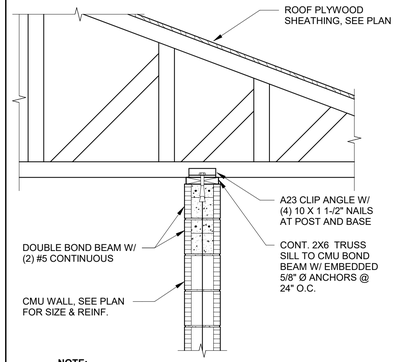

NOTE:
MAXIMUM SPACING OF WALL BRACING SHALL NOT EXCEED 2'-0" ON CENTER.

TYPICAL INTERIOR NON-BEARING WALL BRACE DETAIL

4-068

1315 E. SEVENTH AVENUE
SUITE 106
TAMPA, FLORIDA 33605.3607

TELEPHONE 813.242.6677
FACSIMILE 813.242.6683

wilderarchitecture.com

AA26000655

WILDERARCHITECTURE, INC.

MASTER CONSULTING ENGINEERS, INC.
STRUCTURAL CONSULTANTS
5523 WEST CYPRESS ST., STE.200
TAMPA, FLORIDA 33607-1735
P | 813.287.3600 F | 813.287.3622

THIS DRAWING AND ALL INFORMATION CONTAINED HEREIN IS THE SOLE PROPERTY OF MASTER CONSULTING ENGINEERS, INC. AND MAY NOT BE REPRODUCED, COPIED, ALTERED OR USED IN ANY WAY WITHOUT THE EXPRESS WRITTEN AUTHORIZATION FROM MASTER CONSULTING ENGINEERS, INC.

CA: 8426 PROJ NO. 3099-047

HILLSBOROUGH COUNTY BOARD OF COUNTY COMMISSIONERS
COUNTY CENTER
601 E KENNEDY BLVD
TAMPA, FL 33601

HILLSBOROUGH COUNTY
NORTHWEST AREA HEAD START

PROJECT #: 2010-00	
DISTRIBUTION	DATE
SCHEMATIC DESIGN	05.01.2020
DESIGN DEVELOPMENT	06.11.2020
90% CONST DOCS	08.19.2020

TYPICAL DETAILS

S3.2

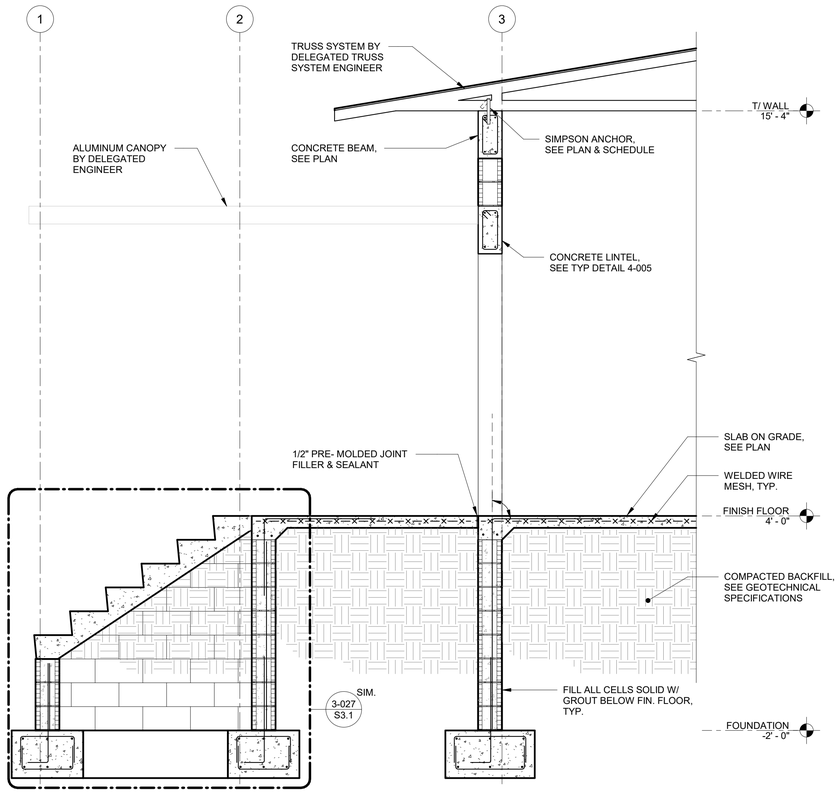

SECTION 1 — 1/2" = 1'-0" — S1

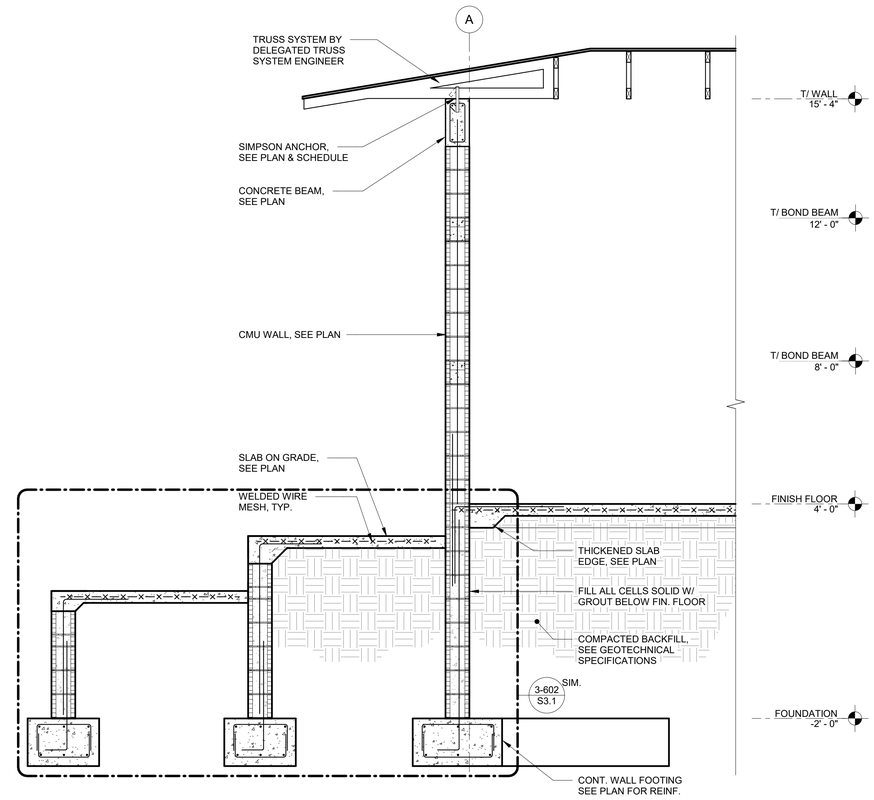

SECTION 2 — 1/2" = 1'-0" — S2

1315 E. SEVENTH AVENUE
SUITE 106
TAMPA, FLORIDA 33605.3607

TELEPHONE 813.242.6677
FACSIMILE 813.242.6683

wilderarchitecture.com

AA26000655

WILDERARCHITECTURE, INC.

MASTER CONSULTING ENGINEERS, INC.
STRUCTURAL CONSULTANTS
5523 WEST CYPRESS ST., STE.200
TAMPA, FLORIDA 33607-1735
P | 813.287.3600 F | 813.287.3622
THIS DRAWING AND ALL INFORMATION CONTAINED HEREIN IS THE SOLE PROPERTY OF MASTER CONSULTING ENGINEERS, INC. AND MAY NOT BE REPRODUCED, COPIED, ALTERED OR USED IN ANY WAY WITHOUT THE EXPRESS WRITTEN AUTHORIZATION FROM MASTER CONSULTING ENGINEERS, INC.
CA: 8426 PROJ NO. 3099-047

HILLSBOROUGH COUNTY BOARD OF COUNTY COMMISSIONERS
COUNTY CENTER
601 E KENNEDY BLVD
TAMPA, FL 33601

HILLSBOROUGH COUNTY
NORTHWEST AREA HEAD START

PROJECT #: 2010-00	
DISTRIBUTION	DATE
SCHEMATIC DESIGN	05.01.2020
DESIGN DEVELOPMENT	06.11.2020
90% CONST DOCS	08.19.2020

SECTIONS AND DETAILS

S4.1

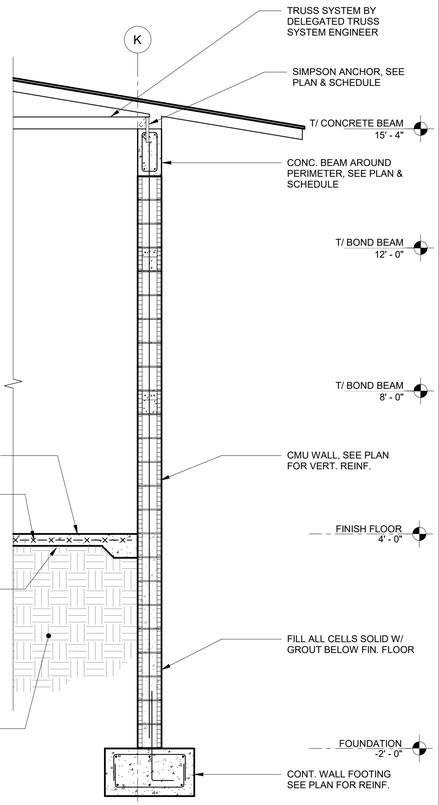

SECTION 3 | S3
1/2" = 1'-0"

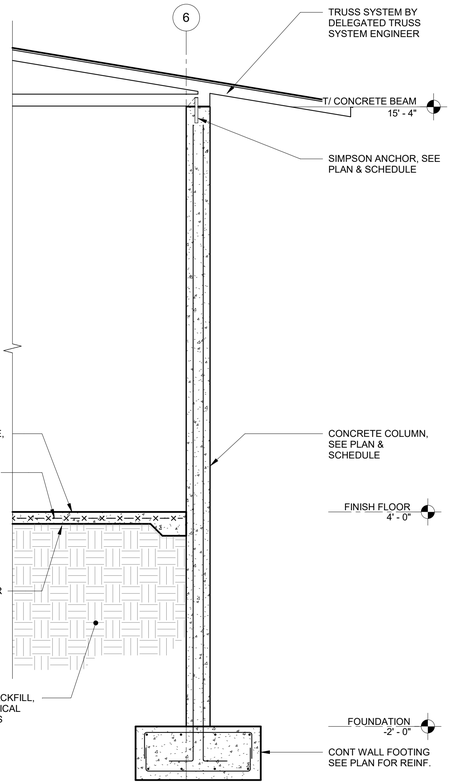

SECTION 4 | S4
1/2" = 1'-0"

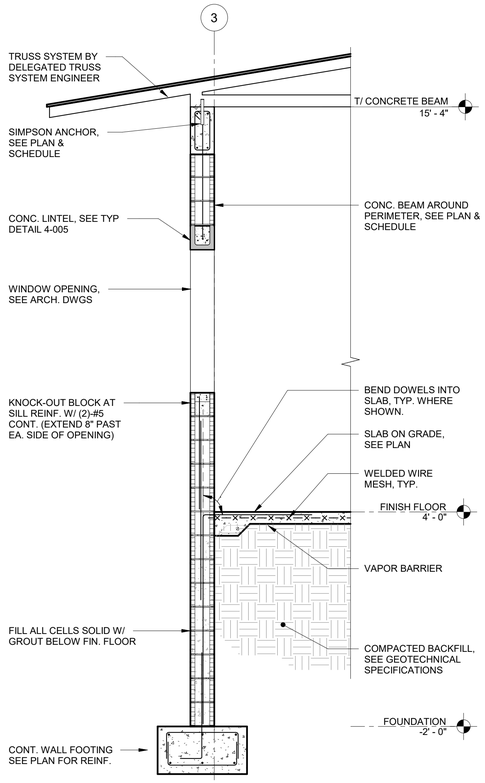

SECTION 5 | S5
1/2" = 1'-0"

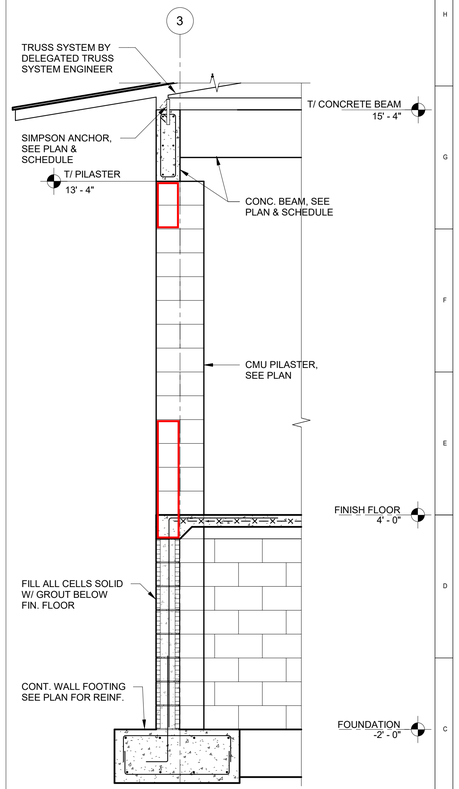

SECTION 6 | S6
1/2" = 1'-0"

1315 E. SEVENTH AVENUE
SUITE 106
TAMPA, FLORIDA 33605.3607

TELEPHONE 813.242.6677
FACSIMILE 813.242.6683

wilderarchitecture.com

AA26000655

WILDER ARCHITECTURE, INC.

MASTER CONSULTING ENGINEERS, INC.
STRUCTURAL CONSULTANTS
5523 WEST CYPRESS ST., STE.200
TAMPA, FLORIDA 33607-1735
P | 813.287.3600 F | 813.287.3622
THIS DRAWING AND ALL INFORMATION CONTAINED HEREIN IS THE SOLE PROPERTY OF MASTER CONSULTING ENGINEERS, INC. AND MAY NOT BE REPRODUCED, COPIED, ALTERED OR USED IN ANY WAY WITHOUT THE EXPRESS WRITTEN AUTHORIZATION FROM MASTER CONSULTING ENGINEERS, INC.
CA: 8426 PROJ NO. 3099-047

HILLSBOROUGH COUNTY BOARD OF COUNTY COMMISSIONERS
COUNTY CENTER
601 E KENNEDY BLVD
TAMPA, FL 33601

HILLSBOROUGH COUNTY
NORTHWEST AREA HEAD START

PROJECT #: 2010-00	
DISTRIBUTION	DATE
SCHEMATIC DESIGN	05.01.2020
DESIGN DEVELOPMENT	06.11.2020
90% CONST DOCS	08.19.2020

SECTIONS AND DETAILS

S4.2

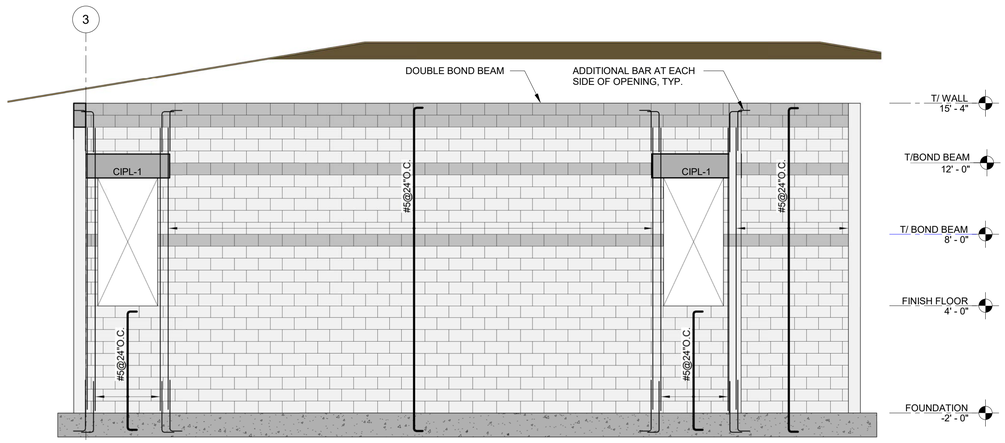

ELEVATION 1 — 1/4" = 1'-0" — E1

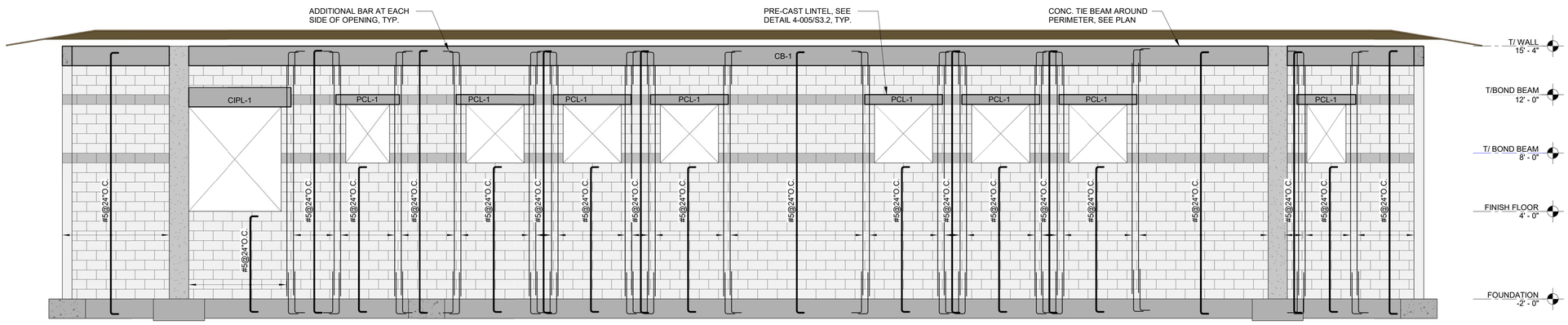

ELEVATION 2 — 1/4" = 1'-0" — E2

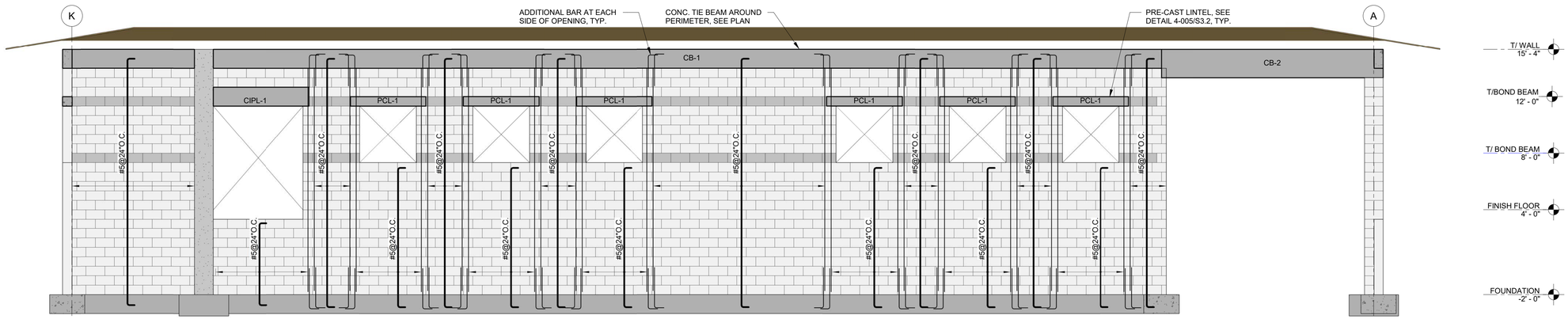

ELEVATION 3 — 1/4" = 1'-0" — E3

1315 E. SEVENTH AVENUE
SUITE 106
TAMPA, FLORIDA 33605.3607

TELEPHONE 813.242.6677
FACSIMILE 813.242.6683

wilderarchitecture.com

AA26000655

WILDERARCHITECTURE, INC.

MASTER CONSULTING ENGINEERS, INC.
STRUCTURAL CONSULTANTS
5523 WEST CYPRESS ST., STE.200
TAMPA, FLORIDA 33607-1735
P | 813.287.3600 F | 813.287.3622
THIS DRAWING AND ALL INFORMATION CONTAINED HEREIN IS THE SOLE PROPERTY OF MASTER CONSULTING ENGINEERS, INC. AND MAY NOT BE REPRODUCED, COPIED, ALTERED OR USED IN ANY WAY WITHOUT THE EXPRESS WRITTEN AUTHORIZATION FROM MASTER CONSULTING ENGINEERS, INC.
CA: 8426 PROJ NO. 3099-047

HILLSBOROUGH COUNTY BOARD OF COUNTY COMMISSIONERS
COUNTY CENTER
601 E KENNEDY BLVD
TAMPA, FL 33601

HILLSBOROUGH COUNTY
NORTHWEST AREA HEAD START

PROJECT #: 2010-00	
DISTRIBUTION	DATE
SCHEMATIC DESIGN	05.01.2020
DESIGN DEVELOPMENT	06.11.2020
90% CONST DOCS	08.19.2020

ELEVATIONS

S5.1

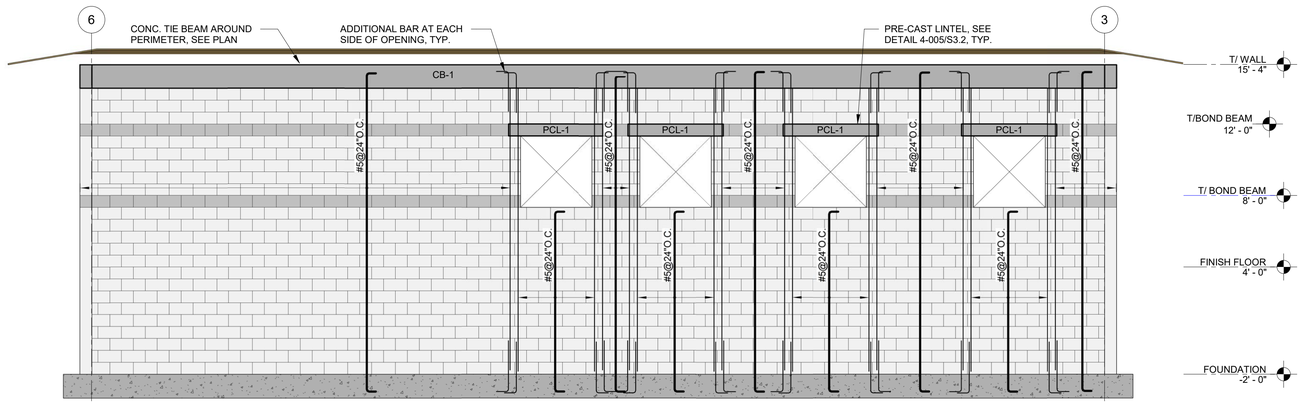

ELEVATION 4
1/4" = 1'-0"

E4

ROOF FRAMING							ROOF FRAMING
21' - 4"							21' - 4"
T/ WALL							T/ WALL
15' - 4"							15' - 4"
T/ BOND BEAM	16 x 16 CMU PILASTER	16 x 16 CMU PILASTER	16 x 16 CMU PILASTER	8 x 16 (4) #6 VERT. & #3 TIES @ 8" O.C.	8 x 16 (4) #6 VERT. & #3 TIES @ 8" O.C.	8 x 16 (4) #6 VERT. & #3 TIES @ 8" O.C.	T/ BOND BEAM
8' - 0"							8' - 0"
FINISH FLOOR							FINISH FLOOR
4' - 0"							4' - 0"
FOUNDATION							FOUNDATION
-2' - 0"	C1	C2	C3	C4	C7	C8	-2' - 0"
Column Locations	A-3	A-4	A-5	B-6	J-3	J-6	

COLUMN SCHEDULE

SCALE: 1/4" = 1'-0"

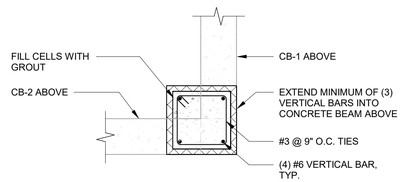

16 x 16 CMU PILASTER DETAIL

SCALE: 3/4" = 1'-0"

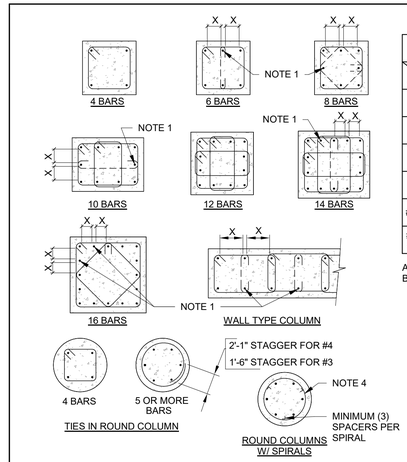

SIZE AND SPACING OF COL. TIES									
A \ B	8"	10"	12"	14"	16"	18"	20"	22"	24" OR MORE
#5	#3@8	#3@10	#3@10	#3@10	#3@10	#3@10	#3@10	#3@10	#3@10
#6	#3@8	#3@10	#3@12	#3@12	#3@12	#3@12	#3@12	#3@12	#3@12
#7	#3@8	#3@10	#3@12	#3@14	#3@14	#3@14	#3@14	#3@14	#3@14
#8	#3@8	#3@10	#3@12	#3@14	#3@16	#3@16	#3@16	#3@16	#3@16
#9,#10	#3@8	#3@10	#3@12	#3@14	#3@16	#3@18	#3@18	#3@18	#3@18
#11#14 & #18	#4@8	#4@10	#4@12	#4@14	#4@16	#4@18	#4@20	#4@22	#4@22

A = SIZE OF VERTICAL REINFORCING
B = LEAST DIMENSION OF COLUMN

NOTES:

1. THESE BARS MUST BE TIED AS SHOWN BY DASHED LINES WHEN "X" DISTANCE IS OVER 6 INCHES AND NEED NOT BE TIED WHEN "X" IS 6" OR LESS.
2. MINIMUM CLEAR COVER 1 1/2" TO TIES (2" FOR EXPOSED CONDITION).
3. FOR VERTICAL COLUMN REINFORCING, SEE PLAN AND COLUMN SCHEDULE.
4. FOR SPIRAL SEE COLUMN SCHEDULE.

TYP. COLUMN SECTIONS & TIE SCHEDULE

3-061

3-061
SCALE: 1/8" = 1'-0"

1315 E. SEVENTH AVENUE
SUITE 106
TAMPA, FLORIDA 33605.3607

TELEPHONE 813.242.6677
FACSIMILE 813.242.6683

wilderarchitecture.com

AA26000655

WILDERARCHITECTURE, INC.

MASTER CONSULTING ENGINEERS, INC.
STRUCTURAL CONSULTANTS
5523 WEST CYPRESS ST., STE.200
TAMPA, FLORIDA 33607-1735
P | 813.287.3600 F | 813.287.3622
THIS DRAWING AND ALL INFORMATION CONTAINED HEREIN IS THE SOLE PROPERTY OF MASTER CONSULTING ENGINEERS, INC. AND MAY NOT BE REPRODUCED, COPIED, ALTERED OR USED IN ANY WAY WITHOUT THE EXPRESS WRITTEN AUTHORIZATION FROM MASTER CONSULTING ENGINEERS, INC.
CA: 8426 PROJ NO. 3099-047

HILLSBOROUGH COUNTY BOARD OF COUNTY COMMISSIONERS
COUNTY CENTER
601 E KENNEDY BLVD
TAMPA, FL 33601

HILLSBOROUGH COUNTY
NORTHWEST AREA HEAD START

PROJECT #: 2010-00	
DISTRIBUTION	DATE
SCHEMATIC DESIGN	05.01.2020
DESIGN DEVELOPMENT	06.11.2020
90% CONST DOCS	08.19.2020

ELEVATIONS

S5.2

GENERAL MECHANICAL NOTES

1. ALL MECHANICAL WORK SHALL MEET ALL OF THE REQUIREMENTS OF THE FOLLOWING:
   A. FLORIDA BUILDING CODE (FBC) 6TH EDITION (2017): THIS CODE INCLUDES THE 2017 FBC BUILDING, MECHANICAL, PLUMBING, ENERGY CONSERVATION, FUEL GAS, ACCESSIBILITY, AND TEST PROTOCOLS VOLUMES. FURTHER, SEE "REFERENCED STANDARDS" IN THE FBC BUILDING CHAPTER 35; FBC MECHANICAL CHAPTER 15; FBC PLUMBING CHAPTER 14; FBC ENERGY CONSERVATION CHAPTER 6; AND FBC FUEL GAS CHAPTER 8) (EFFECTIVE DECEMBER 31, 2017).
   B. 6TH EDITION OF THE FLORIDA FIRE PREVENTION CODE (FFPC): (THIS CODE ALSO INCLUDES THE FLORIDA VERSIONS OF NFPA 1 AND NFPA 101.) (EFFECTIVE DECEMBER 31, 2017).
   C. 2014 NATIONAL ELECTRIC CODE.
2. VERIFY, BY VISITING THE SITE, THE LOCATION OF UTILITIES IN ALL AREAS BEFORE COMMENCING WORK.
3. COORDINATE ALL WORK WITH OTHER AFFECTED TRADES. THE MECHANICAL CONTRACTOR SHALL FORWARD TO THE ELECTRICAL CONTRACTOR AN APPROVED COPY OF ALL EQUIPMENT SHOP DRAWINGS FOR ELECTRICAL POWER/CONTROL INTERFACE.
4. COVER ALL ELECTRICAL AND MECHANICAL EQUIPMENT TO PROTECT THEM FROM DUST AND DAMAGE DURING CONSTRUCTION. RESTORE ALL FACTORY PAINTED SURFACES TO NEW CONDITION, REPAIR ALL SCRATCHES, DENTS AND ABRASIONS. THOROUGHLY CLEAN ALL SURFACES OF DUST DEBRIS, AND FOREIGN MATTER. THE EQUIPMENT, WHEN TURNED OVER TO THE OWNER, SHALL BE CLEAN AND FREE OF DEFECTS.
5. THE CONDENSATE DRAIN LINE SHALL HAVE A TRAP AT THE AIR HANDLING UNIT. TRAP SHALL BE FULL SIZE OF UNIT CONNECTION AND SHALL BE AS DETAILED. PROVIDE CLEAN OUTS IN ALL CHANGES OF DIRECTION. MINIMUM PITCH 1/8" PER FOOT. CONDENSATE DRAIN LINE SHALL RUN TO CONDENSATE DRAIN. INSULATE ALL INTERIOR CONDENSATE PIPING WITH FLEXIBLE UNICELLULAR FOAM (ARMAFLEX OR EQUIVALENT) INSULATION TO PREVENT SWEATING. CONDENSATE DRAIN LINES AND TRAPS IN MECHANICAL ROOMS SHALL BE INSULATED COPPER AND SHALL BE RIGIDLY SUPPORTED.
6. FLEXIBLE UNICELLULAR FOAM (ARMAFLEX OR EQUIVALENT) INSULATION SHALL BE 25/50 FLAME SPREAD/SMOKE DEVELOPED. REFRIGERANT PIPING SHALL BE INSULATED WITH FLEXIBLE UNICELLULAR FOAM INSULATION COMPLYING WITH ASTM C534, TYPE 1. PROVIDE ALUMINUM CLADDING FOR ALL INSULATION EXPOSED TO THE SUN AND WEATHER.
7. REFRIGERANT LINES SHALL BE SIZED AND REFRIGERANT SPECIALTIES SHALL BE PROVIDED IN ACCORDANCE WITH THE MANUFACTURER'S RECOMMENDATIONS FOR STATIC LIFTS AND TOTAL LENGTHS REQUIRED. INSTALL IN ACCORDANCE WITH MANUFACTURER'S RECOMMENDATIONS.
8. AIR HANDLING UNITS SHALL HAVE AN AUXILIARY DRAIN PAN 3" LARGER THAN UNIT EACH WAY. DRAIN PAN SHALL HAVE A FLOAT SWITCH TO DE-ENERGIZE THE AHU IN EVENT OF A CONDENSATE OVERFLOW CONDITION.
9. AIR HANDLING UNITS SHALL BE PLACED ON A 1/4" NEOPRENE PAD WITHIN AN AUXILIARY DRAIN PAN.
10. AIR HANDLING UNITS SHALL BE PLACED ON A CONCRETE PAD 6" THICK BY 6" LARGER, EACH WAY, THAN UNIT.
11. AIR HANDLING UNITS SHALL BE PLACED A MINIMUM OF 24" AWAY FROM WALLS.
12. CONDENSING UNITS SHALL BE PLACED ON A CONCRETE PAD 6" THICK BY 6" LARGER, EACH WAY, THAN UNIT.
13. IN GENERAL, PLANS ARE SCHEMATIC ONLY AND SHOULD NOT BE SCALED.
14. ALL DUCTWORK SHALL MEET THE STANDARDS SET FORTH BY THE LATEST EDITION OF SMACNA "HVAC DUCT CONSTRUCTION STANDARDS". SUPPLY, RETURN, AND EXHAUST DUCTWORK SHALL BE FABRICATED FROM SHEET METAL. ALL ROUND DUCT SHALL BE SHEET METAL UNLESS OTHERWISE NOTED. PROVIDE TURNING VANES IN ALL 90° DUCT ELBOWS.
15. PROVIDE INSULATION FOR NEW DUCTWORK TO AND FROM THE UNIT WITH GLASS FIBER DUCT WRAP INSULATION. FACTORY APPLIED FOIL FACED VAPOR BARRIER, ASTM 518 AND ASTM E84 CERTIFIED TESTING PROCEDURES. JOINT TAPE SHALL BE MINIMUM 3" WIDE FOIL REINFORCED KRAFT TYPE. INSULATION THICKNESS SHALL BE A MINIMUM 2" THICK.
16. SUPPLY AIR DUCT FULL SIZE OF UNIT DISCHARGE. TRANSITION TO SIZE INDICATED ON DRAWINGS. RETURN AIR DUCT IS TO TRANSITION FROM SIZE INDICATED ON DRAWINGS TO FULL SIZE OF UNIT INLET.
17. ALL DUCT DIMENSIONS ARE CLEAR INSIDE DIMENSIONS (FREE AREA).
18. VERIFY ALL CLEARANCES AND DIMENSIONS BEFORE FABRICATION OF DUCTWORK AND PROVIDE ADDITIONAL OFFSETS TO MEET FIELD CONDITIONS. ADJUST LOCATIONS OF ALL EQUIPMENT AND DUCTWORK, AS NECESSARY TO AVOID INTERFERENCES WITH STRUCTURAL AND OTHER BUILDING COMPONENTS.
19. UNLESS NOTED OTHERWISE, INSTALL DUCTWORK AS HIGH AS POSSIBLE, TIGHT TO UNDERSIDE OF STRUCTURE. COORDINATE DUCT ELEVATION WITH WATER PIPING, DRAINS, AND MAJOR ELECTRICAL CONDUITS AND LIGHTS. PROVIDE OFFSETS AND TRANSITIONS AS REQUIRED TO KEEP DUCTWORK TIGHT TO THE STRUCTURE AND MAINTAIN CEILING ELEVATIONS AS INDICATED IN THE ARCHITECTURAL DRAWINGS. DUCTWORK MAY BE FLATTENED TO A 4:1 HEIGHT RATIO MAINTAINING THE DUCT FREE AREA SIZE AS INDICATED IN THE DRAWINGS. DUCTWORK SHAPE MAY HAVE TO BE ADJUSTED (I.E. ROUND TO RECTANGULAR) AS SPACE DICTATES. MULTIPLE SMALLER RUNS MAY BE REQUIRED IN PLACE OF A SINGLE RUN. DUCT RECONFIGURATION SHALL BE INDICATED IN THE DUCT FABRICATION DRAWINGS AND FIELD VERIFIED PRIOR TO SUBMITTAL FOR ENGINEER'S REVIEW.
20. DUCTWORK, DIFFUSERS, REGISTERS, GRILLES, AND OTHER ITEMS OF THE AIR HANDLING SYSTEM SHALL NOT BE SUPPORTED BY THE CEILING OR CEILING SUSPENSION SYSTEM.
21. ALL SUPPLY DUCTWORK BETWEEN THE DISCHARGE OF THE PRIMARY AIR HANDLER AND THE INLETS TO THE VAV BOXES SHALL BE 3" W.G. PRESSURE CLASS. ALL OTHER DUCTWORK SHALL BE 1" W.G. ALL SHEET METAL DUCTWORK SHALL HAVE A CLASS C SEAL.
22. PROVIDE SUPPLEMENTARY STEEL AS REQUIRED TO INSTALL MECHANICAL EQUIPMENT AND MATERIALS.
23. HVAC EQUIPMENT SHALL BE SET INTO PLACE BY CRANE. EQUIPMENT WILL NOT BE PERMITTED TO BE ROLLED ACROSS THE ROOF. IF THE EQUIPMENT WEIGHT MAKES IT PRACTICAL TO CARRY THE EQUIPMENT ACROSS THE ROOF, THEN UPON RECEIVING APPROVAL FROM THE OWNER'S REPRESENTATIVE, THIS METHOD MAY BE USED.
24. REPLACE ANY CEILING TILES OR GRID, DAMAGED DURING CONSTRUCTION IN ANY AREAS WHERE THE CEILING IS REMOVED TO EXECUTE WORK. REPLACEMENT TILES AND TEES SHALL MATCH EXISTING.
25. VERIFY PROPER OPERATION OF ALL FIRE SMOKE DAMPERS IN CONJUNCTION WITH THE FIRE ALARM SYSTEM IN THE DESIGNATED CONSTRUCTION AREA.
26. MAINTAIN NEGATIVE PRESSURE IN ALL DESIGNATED CONSTRUCTION AREAS.
27. THE OWNER SHALL BE GIVEN ONE WEEK PRIOR NOTICE FOR ALL PERIODS OF HVAC SYSTEMS DOWNTIME.
28. IN ADDITION TO THE REQUIREMENTS OF THE SPECIFICATIONS, THE AIR HANDLERS MAY ONLY BE STARTED IF THE FOLLOWING CONDITIONS ARE MET:
   A. ALL OPENINGS FROM THE CONDITIONED SPACE DIRECTLY TO THE OUTSIDE MUST BE CLOSED. TEMPORARY CLOSURE METHODS MAY BE USED SUCH AS THE UTILIZATION OF PLASTIC SHEETS AND DUCT TAPE.
   B. MOP CLEAN ALL CONSTRUCTION DEBRIS AND DUST FROM THE FLOOR. PROVIDE DOOR MATS AT ALL ENTRANCES INTO THE BUILDING.
   C. TEMPORARY BARRIERS ARE TO BE PROVIDED AROUND AREAS THAT WILL HAVE ANY CONCRETE GRINDING OPERATION, DRYWALL WORK, PAINTING OR ANY OTHER PARTICULATE PRODUCING PROCESSES. ALL AIR DISTRIBUTION DEVICES IN THESE AREAS OF CONTAINMENT ARE TO BE COVERED AND SEALED AIR TIGHT.
   D. ALL RETURN GRILLES SHALL HAVE MERV-8 FILTER MEDIA TAPED OVER THEM PRIOR TO AIR HANDLER STARTUP AND SHALL REMAIN IN PLACE UNTIL ALL DUST PRODUCING OPERATIONS HAVE BEEN COMPLETED AND PRIOR TO TEST AND BALANCE. CLEAN ALL TAPE RESIDUE FROM THE GRILLES.
   E. ONCE THE UNIT IS STARTED, FILTERS IN THE AIR HANDLERS ARE TO BE SHAKEN CLEAN DAILY.
29. ALL REQUIRED FIRE DAMPERS MAY NOT BE INDICATED HEREIN. PROVIDE FIRE DAMPERS AS REQUIRED AT RATED WALLS AND FLOORS PER FLORIDA BUILDING – MECHANICAL CODE. REFER TO ARCHITECTURAL DRAWINGS FOR RATED PARTITION LOCATIONS.
30. ALL REQUIRED BALANCING DAMPERS MAY NOT BE INDICATED HEREIN. ADDITIONAL BALANCING DAMPERS MAY BE REQUIRED BY THE TEST AND BALANCING AGENT. THE TEST AND BALANCE AGENT IS REQUIRED TO REVIEW THE PLANS WITHIN 30 DAYS OF RECEIPT OF CONTRACT AND IDENTIFY DISCREPANCIES AND WHERE ADDITIONAL DAMPERS MAY BE NEEDED. ADDED DAMPERS WILL BE AT NO ADDITIONAL COST TO THE OWNER.
31. PROVIDE ADDITIONAL VOLUME DAMPERS AS REQUIRED BY THE TEST AND BALANCE CONTRACTOR TO ACHIEVE AIRFLOWS INDICATED ON THE DRAWINGS.
32. ALL DUCT MOUNTED MANUAL BALANCING DAMPERS SHALL HAVE A TWO FOOT LONG, YELLOW STRIP OF PLASTIC MATERIAL ATTACHED TO THE DAMPER HANDLE FOR EASY VISUAL IDENTIFICATION.
33. OMIT INSULATION ON TRANSFER DUCT SYSTEM. TRANSFER DUCT SYSTEMS ARE CONNECTED TO "XG#" TYPE AIR DISTRIBUTION DEVICES.
34. SUBMIT DUCT FABRICATION DRAWINGS AND MECHANICAL ROOM LAYOUTS PER SPECIFICATIONS PRIOR TO ANY FRAMING WORK. ALL FLOOR DRAINS IN MECHANICAL ROOMS/CLOSETS, AND ELECTRICAL PANEL LOCATIONS SHALL BE FIELD VERIFIED, COORDINATED, AND INDICATED IN THE SUBMITTAL.
35. ALL FIRE STOPPING SHALL BE INSTALLED IN CONFORMANCE WITH THE MANUFACTURER'S U.L. DETAILS OF THE PRODUCTS USED SPECIFICALLY ON THIS PROJECT. APPLICABLE U.L. DETAILS SHALL BE SUBMITTED FOR THE ENGINEER'S REVIEW AND A COPY SHALL BE AVAILABLE ON SITE FOR USE BY THE AUTHORITY HAVING JURISDICTION.
36. CONTROLS CONDUITS SHALL CONFORM TO ALL REQUIREMENTS FOR DIVISION 26 CONDUITS. REFER TO DIVISION 26 SPECIFICATIONS AND DRAWINGS.
37. CONCRETE SLAB/PAD IS TO HAVE NO CONTACT WITH ANY METAL PORTION OF THE EQUIPMENT OR THAT EQUIPMENT'S SUPPORT. PROVIDE 1/4" THICK RED, OR BLACK, RUBBER PAD UNDER THE ENTIRE METAL SURFACE INTENDED TO REST ON THE CONCRETE PAD.
38. THE TEMPERATURE CONTROLS (INCLUDING GRAPHICS) SHALL BE IN OPERATION AND EXERCISED IN THE PRESENCE OF THE ENGINEER OF RECORD AT TIME OF SUBSTANTIAL COMPLETION. THE CONSTRUCTION MANAGER SHALL SCHEDULE A MEETING BETWEEN THE CONTROL'S CONTRACTOR AND THE ENGINEER ONE WEEK PRIOR. THIS SHALL OCCUR PRIOR TO OWNER TRAINING.
39. PROVIDE DIELECTRIC UNIONS/PROTECTION AT ALL POINTS OF CONNECTION BETWEEN DISSIMILAR METALS; PIPE, PIPE HANGERS, CONNECTIONS TO STRUCTURAL STEEL, ETC.
40. ROUND FLEX DUCT SHALL BE A MAXIMUM LENGTH OF 6 FEET. ALL RUNS OF FLEX DUCT ARE TO BE SUPPORTED WITH THE APPROPRIATE HANGERS. FLEX DUCT SHALL NOT SAG OR BE CRIMPED.
41. AIR CONDITIONING FILTERS ARE TO BE PROVIDED AND CHANGED BY THE CONTRACTOR UP TO AND ON THE DATE OF SUBSTANTIAL COMPLETION ACCEPTANCE. FROM THAT TIME ON, THE OWNER WILL RETAIN ALL RESPONSIBILITY FOR FILTER MAINTENANCE. FILTERS SHALL BE NEW AT THE TIME OF SUBSTANTIAL COMPLETION.
42. VAV TERMINAL BOXES SHALL BE MOUNTED WITH THE BOTTOM AT 8" ABOVE THE CEILING. THE CONTROL PANEL AND THE HEATER SERVICE PANEL SHALL BE UNOBSTRUCTED AS REQUIRED BY NEC AND AS RECOMMENDED BY THE TERMINAL MANUFACTURER. VAV BOXES ARE TO BE INSTALLED WITH A 4 FT. LONG STRAIGHT SECTION OF ROUND DUCT AT THE INLET AND SHALL BE THE SAME SIZE AS THE BOX CONNECTION. ALL DUCTWORK BETWEEN THE VAV INLET AND THE AIR HANDLER IS TO BE RIGID (NO FLEX).
43. LOCATE ALL AIR DISTRIBUTION DEVICES AND CEILING MOUNTED EQUIPMENT IN CONFORMANCE WITH THE REFLECTED CEILING PLANS INCLUDED IN THE ARCHITECTURAL DRAWINGS FOR THIS PROJECT. COORDINATE DUCTWORK TO ALLOW FOR LOCATIONS OF THESE ITEMS. PROVIDE REVISED DUCTWORK LAYOUT WHERE REQUIRED. ANY MECHANICAL ITEMS EXPOSED TO VIEW SHALL BE PLACED PER THE ARCHITECTURAL DRAWINGS.
44. ALL EXTERIOR FASTENERS, ANCHORS, SUPPORTS, AND MOUNTING HARDWARE SHALL BE HOT DIPPED GALVANIZED OR STAINLESS STEEL.
45. PRIOR TO SUBSTANTIAL COMPLETION, A COMPLETE CERTIFIED TEST AND BALANCE REPORT SHALL BE SUBMITTED TO THE ENGINEER FOR REVIEW. REFER TO THE SPECIFICATIONS FOR REQUIREMENTS.
46. DUCTS SHOWN PENETRATING SMOKE PARTITIONS SHALL BE SEALED AIR TIGHT BETWEEN THE DUCT OR ITS INSULATION AND THE WALL IT PENETRATES.
47. ALL THERMOSTAT/WALL SENSORS SHALL BE LABELED WITH THE UNIT MARK OF THE ITEM BEING CONTROLLED.
48. SEE 8x11 SPECIFICATIONS FOR ADDITIONAL REQUIREMENTS.

HVAC LEGEND

UP / DOWN	SUPPLY AIR DUCT (UP & DOWN)
UP / DOWN	RETURN AIR DUCT (UP & DOWN)
UP / DOWN	EXHAUST AIR DUCT (UP & DOWN)
VD	VOLUME DAMPER
	FIRE DAMPER – REFER TO DETAIL
T	WALL MTD THERMOSTAT OR TEMPERATURE SENSOR
VD	BELLMOUTH "SPIN-IN" FITTING WITH LOCKING QUADRANT DAMPER
	FLEX DUCT
CD1 375 12x12/8"ø	AIR DEVICE MARK. TOP LINE INDICATES TYPE, REFER TO SCHEDULE. SECOND LINE INDICATES AIR QUANTITY CFM. THIRD LINE INDICATES NECK SIZE AND DUCT CONNECTION SIZE.
UC	UNDERCUT DOOR BY 3/4" AFF UNLESS OTHERWISE INDICATED COORDINATE WITH ARCHITECTURAL DRAWINGS.
SD	DUCT MOUNTED SMOKE DETECTOR
M	MOTORIZED DAMPER (24 VOLT UNLESS NOTED OTHERWISE)

OUTDOOR AIR VENTILATION RATES

Description of Area	Space Classification	People Outdoor Air Rate cfm / person	x	Occupants Each (Oz)	=	People (Rp x Pz) cfm	Area Outdoor Air Rate (Ra) cfm / Sq. Ft.	x	Total Sq. Ft. (Az)	=	Area (Ra x Az) cfm	People cfm + Area cfm = uncorrected OA cfm (Vbz)	Air Distribution Effectiveness	Required Outside Air (CFM)
AH1														
101 Vestibule	Corridor	5.0	x	0	=	0	0.06	x	75	=	5	5	1.0	5
122 Corridor	Corridor	5.0	x	0	=	0	0.06	x	142	=	9	9	1.0	9
104 Office	OFFICE: Office space	5.0	x	1	=	5	0.06	x	88	=	5	10	1.0	10
105 Office	OFFICE: Office space	5.0	x	1	=	5	0.06	x	114	=	7	12	1.0	12
125 Conference Room	GENERAL: Conference/meeting	5.0	x	6	=	30	0.06	x	149	=	9	39	1.0	39
108 Break Room	GENERAL: Break room	5.0	x	4	=	20	0.06	x	248	=	15	35	1.0	35
109 Classroom	EDUCATION: Daycare	10.0	x	9	=	90	0.18	x	363	=	65	155	1.0	155
110 Classroom	EDUCATION: Daycare	10.0	x	21	=	210	0.18	x	715	=	129	339	1.0	339
103 Corridor	Corridor	5.0	x	0	=	0	0.06	x	448	=	27	27	1.0	27
112 Classroom	EDUCATION: Daycare	10.0	x	9	=	90	0.18	x	363	=	65	155	1.0	155
113 Classroom	EDUCATION: Daycare	10.0	x	21	=	210	0.18	x	704	=	127	337	1.0	337
												Required Outside Air:		1,122
												Outside Air Provided:		1,580

BUILDING AIR BALANCE

OUTSIDE AIR INTO BUILDING		EXHAUST AIR OUT OF BUILDING		NET CFM
SOURCE	CFM	SOURCE	CFM	
AH1	1,580	RF1	1,200	
	1,580		1,200	380

ZONE PRESSURIZATION ((1,580 OA – 1,200 EXH) / 3,450 SA) x 100 = 11.01%

DESIGN CRITERIA

Location:	TAMPA
Latitude:	28.0°
Longitude:	82.0°
Elevation:	19 ft.
Barometric Pressure:	29.9 in. Hg

DESIGN TEMPERATURES:

Ambient Summer Design Dry Bulb:	91°F
Ambient Summer Design Wet Bulb:	80°F
Ambient Winter Design Dry Bulb:	39°F
Space Setpoint – cooling	76°F
Space Setpoint – heating	70°F
Space Setpoint – humidity	50% RH

HVAC DRAWING INDEX

M0.1	HVAC GENERAL NOTES AND LEGEND
M1.1	HVAC PLAN
M2.1	HVAC SCHEDULES
M2.2	HVAC SCHEDULES
M3.1	HVAC DETAILS
M4.1	HVAC CONTROLS

1315 E. SEVENTH AVENUE
SUITE 106
TAMPA, FLORIDA 33605.3607

TELEPHONE 813.242.6677
FACSIMILE 813.242.6683

wilderarchitecture.com

AA26000655

WILDERARCHITECTURE, INC.

AGI
Anston-Greenlees, Inc.
Mechanical & Electrical Consulting Engineers
1315 West Fletcher Avenue, Tampa, FL 33612 Tel(813)963-1919
Email: AGI@agi-engineers.com HTTP://www.agi-engineers.com
Florida Engineering Business Number 6093

NOT FOR CONSTRUCTION

HARRY W. PORTELLOS, P.E. 61597

TO THE BEST OF MY KNOWLEDGE, THESE DRAWINGS AND THE PROJECT MANUAL ARE COMPLETE AND COMPLY WITH THE 2017 FLORIDA BUILDING CODE

THIS ITEM HAS BEEN ELECTRONICALLY SIGNED AND SEALED ON THE DATE/TIME STAMP SHOWN USING A DIGITAL SIGNATURE. PRINTED COPIES OF THIS DOCUMENT ARE NOT CONSIDERED SIGNED AND SEALED AND THE SIGNATURE MUST BE VERIFIED ON ANY ELECTRONIC COPIES.

HILLSBOROUGH COUNTY BOARD
OF COUNTY COMMISSIONERS
COUNTY CENTER
601 E KENNEDY BLVD
TAMPA, FL 33601

HILLSBOROUGH COUNTY
NORTHWEST AREA HEAD START

PROJECT #: 2010-00	
DISTRIBUTION	DATE
DESIGN DEVELOPMENT	06.11.2020
90% CONST DOCS	08.19.2020

HVAC GENERAL
NOTES AND LEGEND

M0.1

Drawing File: I:\20xxx\20033.001\20033m01.dwg M01
Plotted by: brandon Aug 17, 2020 - 11:53am

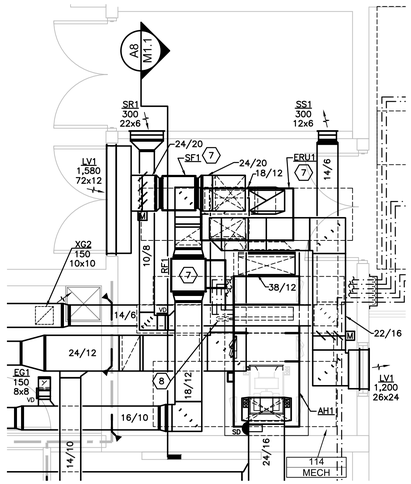

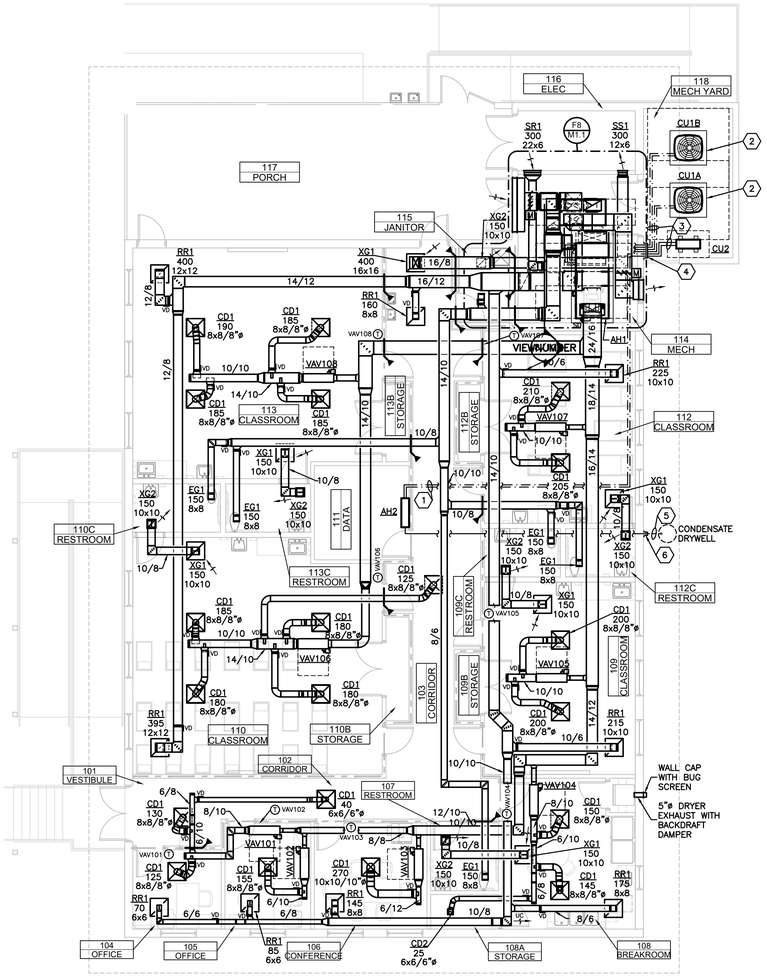

DRAWING NOTES:

1. REFRIGERANT LINES ABOVE CEILING.
2. PROVIDE 4" THICK CONCRETE PAD 6" LARGER THAN UNIT IN EACH DIMENSION. SECURE CONDENSING UNIT TO THE CONCRETE PAD WITH HOT-DIPPED GALVANIZED STEEL ANGLES AND ANCHORS. PROVIDE NEOPRENE PADS BETWEEN THE UNIT AND THE CONCRETE PAD.
3. RIGIDLY SUPPORT REFRIGERANT LINES OFF PAD AND GROUND. PROVIDE HOT DIPPED GALVANIZED SUPPORTS AND HARDWARE WHERE EXPOSED TO WEATHER. PROVIDE ALUMINUM JACKET ON UNICELLULAR FOAM INSULATED LINES THAT ARE SUPPORTED FROM THE PAD OR GROUND.
4. PROVIDE REFRIGERANT LINE COVER PER DETAIL. SUPPORT REFRIGERANT LINES FROM WALL AND ROUTE LINES THROUGH WALL TIGHT TO STRUCTURE ABOVE. SEAL WALL PENETRATION WEATHERTIGHT.
5. CONDENSATE LINE TO CONDENSATE DRYWELL. REFER TO DETAIL.
6. PROVIDE CONDENSATE COVER EQUIVALENT TO REFRIGERANT LINE COVER. REFER TO DETAIL.
7. HUNG FROM STRUCTURE.
8. PROVIDE CONDENSATE TRAP AS DETAILED AND ROUTE CONDENSATE DRAIN LINE TO CONDENSATE FLOOR DRAIN. COORDINATE LOCATION OF FLOOR DRAIN WITH PLUMBING DRAWINGS. SUPPORT DRAIN LINE FROM FLOOR. COORDINATE EQUIPMENT SUPPORT RAIL HEIGHT OF AIR HANDLER TO ALLOW FOR PROPER TRAP DEPTH. PROVIDE CLEAN OUTS IN ALL CHANGES OF DIRECTION. MINIMUM PITCH 1/8" PER FOOT. INSULATE ALL INTERIOR CONDENSATE PIPING WITH FLEXIBLE UNICELLULAR FOAM (ARMAFLEX OR EQUIVALENT) INSULATION TO PREVENT SWEATING. CONDENSATE DRAIN LINES AND TRAPS IN MECHANICAL ROOM SHALL BE SCHEDULE 40 PVC AND SHALL BE RIGIDLY SUPPORTED.

IN DEVELOPMENT

0 2' 4' 8'
MECHANICAL ROOM HVAC PLAN
1/4" = 1'-0"
A8

0 2' 4' 8'
MECHANICAL ROOM SECTION
1/4" = 1'-0"
A8

0 4' 8' 16'
HVAC PLAN
1/8" = 1'-0"
A1

1315 E. SEVENTH AVENUE
SUITE 106
TAMPA, FLORIDA 33605.3607

TELEPHONE 813.242.6677
FACSIMILE 813.242.6683

wilderarchitecture.com

AA26000655

WILDERARCHITECTURE, INC.

AGI
Anston-Greenlees, Inc.
Mechanical & Electrical Consulting Engineers
1315 West Fletcher Avenue, Tampa, FL 33612 Tel(813)963-1919
Email: AGI@agi-engineers.com HTTP://www.agi-engineers.com
Florida Engineering Business Number 6093

NOT FOR CONSTRUCTION

HARRY W. PORTELLOS, P.E. 61597

TO THE BEST OF MY KNOWLEDGE, THESE DRAWINGS AND THE PROJECT MANUAL ARE COMPLETE AND COMPLY WITH THE 2017 FLORIDA BUILDING CODE

THIS ITEM HAS BEEN ELECTRONICALLY SIGNED AND SEALED ON THE DATE/TIME STAMP SHOWN USING A DIGITAL SIGNATURE. PRINTED COPIES OF THIS DOCUMENT ARE NOT CONSIDERED SIGNED AND SEALED AND THE SIGNATURE MUST BE VERIFIED ON ANY ELECTRONIC COPIES.

HILLSBOROUGH COUNTY BOARD
OF COUNTY COMMISSIONERS
COUNTY CENTER
601 E KENNEDY BLVD
TAMPA, FL 33601

HILLSBOROUGH COUNTY
NORTHWEST AREA HEAD START

PROJECT #: 2010-00	
DISTRIBUTION	DATE
DESIGN DEVELOPMENT	06.11.2020
90% CONST DOCS	08.19.2020

HVAC PLAN

M1.1

Drawing File: i:\20xxx\20033.001\20033m11.dwg M11
Plotted by: brandon Aug 17, 2020 - 11:54am

MINI–SPLIT UNIT SCHEDULE

MARK		AH2/CU2
AREA SERVED	–	111 DATA
COOLING CAPACITY	BTUH	9,000
HEATING CAPACITY	BTUH	9,000
AIR QUANTITY (HIGH)	CFM	381
ENERGY EFFICIENCY	SEER	24.5
REFRIGERANT	–	R–410A
MANUFACTURER	–	DAIKIN
INDOOR MODEL	–	FTXS09LVJU
DIMENSIONS (HxWxD)	IN.	12x32x10
CU/HP MODEL	–	RXS09LVJU
DIMENSIONS (HxWxD)	IN.	22x32x12
REF. LINE LENGTH (APROX)	L.F.	39
ELECTRICAL	V/PH	208/1
MCA/MAX FUSE	AMP/AMP	8.0/15
NOTES		1,2,3,4,5,6,7

NOTES:

1. DUCTLESS SPLIT AIR CONDITIONING UNIT WITH REMOVABLE FRONT GRILLE, WASHABLE REUSABLE FILTERS, AUTO–RESTART. PROVIDE POWER SUPPLY CORD AND ACCESSORIES FOR WALL MOUNTING, WIRELESS REMOTE CONTROL WITH 24 HOUR TIMER, FOUR SPEED FAN CONTROL, AUTO–COOL–DRY–FAN MODE. UL LISTED.
2. ALL REFRIGERANT LINES SHALL BE RIGIDLY SUPPORTED. CONCEAL LINES AS MUCH AS POSSIBLE. THE CONTRACTOR SHALL OBTAIN OWNER APPROVAL FOR PIPING THAT IS PROPOSED TO BE RUN EXPOSED.
3. INSULATE ALL SUCTION LINES.
4. PROVIDE WITH INLINE CONDENSATE PUMP POWERED THROUGH THE AIR HANDLER.
5. PROVIDE PAD MOUNTING BRACKET.
6. THERMOSTAT ON UNIT SERVING MDF DATA ROOM SHALL BE SET AND LOCKED TO 76°F.
7. PROVIDE UNIT MANUFACTURER'S WALL MOUNTED THERMOSTAT WITH METAL LOCK BOX.

COMPONENTS FOR MINI–SPLIT SYSTEM INSTALLATION

1. INTERIOR LINESET COVER: ALL EXPOSED LINESETS, WHICH ARE INSTALLED INSIDE THE BUILDING, SHALL BE ENCLOSED IN AN EXTRUDED PVC LINESET COVER SYSTEM, WHICH SHALL CONSIST OF COMPONENTS THAT DISASSEMBLE EASILY TO PROVIDE RAPID INSTALLATION AND FACILITATE FUTURE ACCESS FOR TESTING AND/OR REPAIRS AND SHALL HAVE NO EXPOSED FIXINGS OR CLOSURE MECHANISMS. THEY SHALL BE INSTALLED STRICTLY IN ACCORDANCE WITH MANUFACTURER'S INSTRUCTIONS. LINESET COVERS FABRICATED FROM FOLDED METAL OR FROM PLASTIC OR METAL DOWNSPOUTS ARE NOT ACCEPTABLE. ENCLOSURE SYSTEM SHALL BE SLIMDUCT MD SERIES OR EQUIVALENT WITH COMPATIBLE AND APPROPRIATE ELBOWS, COUPLERS, CEILING TRIM, WALL INLETS, AND END COVERS.
2. EXTERIOR LINESET COVER: ALL EXPOSED LINESETS, WHICH ARE INSTALLED OUTSIDE THE BUILDING, SHALL BE ENCLOSED IN AN EXTRUDED PVC LINESET ENCLOSURE SYSTEM, WHICH SHALL CONSIST OF COMPONENTS THAT DISASSEMBLE EASILY TO PROVIDE RAPID INSTALLATION AND FACILITATE FUTURE ACCESS FOR TESTING AND/OR REPAIRS. ALL CLOSURE SCREWS AND ANY EXPOSED FIXING HARDWARE SHALL BE STAINLESS STEEL. NO EXTERNAL FIXINGS SHALL BE VISIBLE EXCEPT IN THE CASE OF SPECIFIC COMPONENTS THAT CANNOT BE FIXED INTERNALLY. ALL LINESET COVERS SHALL BE CORRECTLY SIZED TO ACCOMMODATE THE LINESET ITSELF AND ANY DRAIN HOSE OR ELECTRICAL WIRING WHICH MAY ALSO BE ENCLOSED. LINESET COVERS SHALL BE APPROPRIATELY COLORED TO FIT IN WITH BUILDING ARCHITECTURE AND SHALL BE INSTALLED STRICTLY IN ACCORDANCE WITH MANUFACTURER'S INSTRUCTIONS. LINESET COVERS FABRICATED FROM FOLDED METAL OR FROM PLASTIC OR METAL DOWNSPOUTS ARE NOT ACCEPTABLE LINESET COVERS SHALL BE SLIMDUCT SD SERIES OR EQUIVALENT WITH COMPATIBLE AND APPROPRIATE ELBOWS, COUPLERS, WALL INLETS, AND END COVERS. ALL ASSOCIATED ANCHORAGE AND CONNECTING HARDWARE SHALL BE EITHER STAINLESS STEEL OR HOT DIPPED GALVANIZED.
3. CONDENSATE DRAIN HOSE: CONDENSATE DRAIN HOSE SHALL BE ADEQUATELY SIZED AND INSTALLED WITH SUFFICIENT SLOPE TO ENSURE GRAVITY FLOW OF CONDENSATE WATER TO OUTSIDE THE BUILDING. WHERE GRAVITY FLOW IS NOT POSSIBLE, A SUITABLY SIZED PUMP SHALL BE INSTALLED IN ACCORDANCE WITH MANUFACTURER'S INSTRUCTIONS. DRAIN LINES SHALL BE INSTALLED WITHOUT KINKS OR RESTRICTIONS, WHICH COULD INHIBIT THE FREE FLOW OF CONDENSATE WATER. WHERE CONDENSATE DRAIN LINE IS RUN INSIDE AN INTERIOR LINESET COVER, THE LINE SHALL BE SLIMDUCT DRAIN HOSE MODEL DSH–14 OR EQUIVALENT. WHERE CONDENSATE DRAIN LINES ARE CONCEALED IN WALLS OR ABOVE CEILINGS, THE CONDENSATE DRAIN LINES SHALL BE TYPE L COPPER INSULATED WITH FLEXIBLE UNICELLULAR FOAM INSULATION.
4. CONDENSER MOUNTING BRACKETS: ALL MINISPLIT CONDENSERS SHALL BE FIRMLY MOUNTED IN AN AREA, WHICH IS EASILY ACCESSIBLE FOR PERIODIC MAINTENANCE AND/OR REPAIRS. CONDENSER BRACKETS SHALL BE PRESSED STEEL, GALVANIZED AND POWDER COATED. ALL BOLTS AND FIXINGS SHALL BE RUSTPROOF AND ALL BRACKETS SHALL BE FITTED WITH RUBBER ANTI VIBRATION MOUNTINGS UNDERNEATH THE CONDENSER. BRACKETS SHALL BE CORRECTLY SIZED FOR PHYSICAL DIMENSIONS OF CONDENSER AND WEIGHT CAPABILITY AND SHALL BE INSTALLED STRICTLY IN ACCORDANCE WITH MANUFACTURER'S INSTALLATION INSTRUCTIONS. SUITABILITY OF BOTH MOUNTING SURFACE AND FIXING BOLTS TO HANDLE COMBINED LOAD SHALL BE CONFIRMED BY THE CONTRACTOR PRIOR TO INSTALLATION.
   A. PAD MOUNTED: CONDENSERS INSTALLED DIRECTLY ONTO CONCRETE SLABS SHALL BE MOUNTED ON RISERS, EQUIVALENT TO SLIMDUCT PLAROCK MODEL PR–351N–I WITH PRC–351 END CAPS OR EQUIVALENT UTILIZING HOT DIPPED GALVANIZED BOLTS.
5. CONDENSATE PUMP: WHERE CONDENSATE DISCHARGE TERMINATES ABOVE AC UNIT ELEVATION, A CONDENSATE DRAIN PUMP EQUIVALENT TO 115 VOLT/60 HZ., 20 WATT EZ–TRAP/ASPEN PUMPS MODEL ASP–ML–115 WITH INSTALLATION KIT PROVIDED. THE INSTALLATION KIT SHALL HAVE PUMP/CABLE ASSEMBLY, PVC ELBOW AND LINESET COVER, CEILING FLASHING, INLET AND DISCHARGE HOSE, WALLPLUGS AND SCREWS.
   A. THE PUMP SHALL BE SELF PRIMING AND SELF LEVELING, OPERATES AUTOMATICALLY ON WATER RISE, HAS A CAPACITY OF 0.8 GPH. @ 26 FOOT HEAD, OPERATES EXTREMELY QUIETLY AT 23 DB(A) AND SHALL BE RATED FOR MINISPLITS UP TO 30,000 BTU/HR. THE PUMP SHALL BE THERMALLY PROTECTED, POTTED FOR WATER RESISTANCE, INCLUDES WATERPROOF TERMINATION OF ELECTRICAL AND ALARM WIRING AND IS UL LISTED. THE PUMP AND WATER LEVEL SENSOR SHALL BE CONSOLIDATED INTO ONE SINGLE UNIT IN WHICH THE PUMP IS MOUNTED DIRECTLY ABOVE THE SENSOR HOUSING/RESERVOIR WHICH IS TRANSPARENT TO FACILITATE INSPECTION. THE SENSOR HOUSING/RESERVOIR DISASSEMBLES EASILY FROM THE PUMP TO FACILITATE CLEANING AND MAINTENANCE AND INCLUDES A STAINLESS STEEL MESH FILTER WHICH EASILY REMOVABLE FOR CLEANING. IT ALSO INCLUDES VOLT FREE NO & NC CONTACTS RATED AT 5 AMP INDUCTIVE AND 8 AMP RESISTIVE AT LINE VOLTAGE. THESE CONTACTS WILL ENERGIZE THE PUMP ON RISE OF WATER LEVEL, HOWEVER, IF THE WATER LEVEL CONTINUES TO RISE BECAUSE WATER IS NOT BEING EVACUATED FOR ANY REASON, THEY WILL CUT POWER TO PUMP AND EVAPORATOR.
   B. THE PUMP SHALL BE LOCATED AT THE FIRST LINESET COVER ELBOW FROM THE AC UNIT. THE ELBOW AND LINESET COVER BOTH HAVE REMOVABLE COVERS WHICH PROVIDE EASY ACCESS FOR INSTALLATION, CHECKING AND MAINTENANCE OF THE PUMP UNIT AND/OR THE DRAIN HOSES, WIRING OR LINESETS.

MODULAR AIR HANDLER UNIT SCHEDULE

	MARK		AH1
	TOTAL SUPPLY AIR	CFM	3,220
	TOTAL OF CONNECTED DEVICES DOWNSTREAM	CFM	3,450
	RELIEF AIR	CFM	
	STATIC PRESSURE (EXT/TOTAL)	IN. H_2O	2.5/–
OUTSIDE AIR PATH	AIR QUANTITY	CFM	1,580
	ENTERING TEMPERATURE DB/WB	°F/°F	91.0/80.0
	COOLING COIL TOTAL CAPACITY (NET)	MBH	160.2
	COOLING COIL SENSIBLE CAPACITY (NET)	MBH	66.5
	COOLING COIL	ROWS/FPI	6/10.5
	COOLING COIL MAX AIR PRESS. DROP	IN. H_2O	0.511
	COOLING COIL MAX. FACE VELOCITY	°F	350
	SATURATED SUCTION TEMPERATURE	°F	47
	LEAVING TEMPERATURE COOLING DB/WB	°F/°F	52.0/51.4
	FILTERS	TYPE/EFF.	4 INCH MERV 14
RETURN/MAIN AIR PATH	AIR QUANTITY	CFM	1,640
	ENTERING TEMPERATURE DB/WB	°F/°F	74.0/61.6
	COOLING COIL TOTAL CAPACITY (NET)	MBH	47.8
	COOLING COIL SENSIBLE CAPACITY (NET)	MBH	39.0
	COOLING COIL	ROWS/FPI	4/10
	COOLING COIL MAX AIR PRESS. DROP	IN. H_2O	0.2
	COOLING COIL MAX. FACE VELOCITY	FPM	270
	SATURATED SUCTION TEMPERATURE	°F	47
	LEAVING TEMPERATURE COOLING DB/WB	°F/°F	52.0/51.4
	FILTERS	TYPE/EFF.	2 INCH MERV 8 / 4 INCH MERV 14
MIXED	AIR QUANTITY	CFM	1,640
	MIXED AIR TEMPERATURE DB/WB	°F/°F	52.0/51.4
	MAX. FAN SPEED	RPM	
	FAN MOTOR	BHP/HP	3.63/5.0
	ELECTRICAL CHARACTERISTICS	V/ø/Hz	208/3/60
	FAN ARRANGEMENT/TYPE	–	DIRECT DRIVE PLENUM
	UNIT ARRANGEMENT	–	HORIZONTAL UPBLAST
	MINIMUM INVERT TO CONDENSATE CONNECTION ABOVE PAD	IN.	6
	UNIT WEIGHT	LBS.	1,325
	RADIATED SOUND POWER LEVELS (OCTAVES)	dB (63 thru 8000)	81/73/75/84/71/57/55/43
	DISCHARGE SOUND POWER LEVELS (OCTAVES)	dB (63 thru 8000)	84/80/75/83/71/69/68/58
	UNIT LOCATION	–	114 MECH.
	MANUFACTURER	–	TRANE
	MODEL NUMBER	–	CSAA004/006
	NOTES	#	1 THROUGH 10

CONDENSING UNIT DATA

MARK		CU1A–OA	CU1B–RA
NOMINAL TONS	TONS	7.5	5.0
OUTDOOR TEMP.	°F	95	95
REFRIGERANT	–	R410A	R410A
ELECTRICAL CHARACTERISTCS	V/ø/HZ	208/3/60	208/3/60
OUTDOOR FAN(S)	QTY/HP	1/0.5	1/0.2
OUTDOOR FAN RUN LOAD AND LOCKED ROTOR	AMPS	3.1/8.1	1.05/–
COMPRESSORS	QTY/HP	2/–	1/–
COMPRESSOR RLA AND LRA EACH	AMPS	2 @13.1/83.0	1 @15.9/110
MIN. CIRCUIT AMPS/RECOMMENDED FUSE (MOCP)	MCA/AMPS	33/45	21/35
SEER/EER/IPLV (MINIMUM)	–	12.8/12.9	14
UNIT WEIGHT	LBS.	384	190
UNIT DIMENSIONS (NOT INCLUDING SERVICE AREAS)	INxINxIN	28x36x41	37x34x29
MANUFACTURER	–	TRANE	TRANE
MODEL	–	TTA090D	4TTA4048
NOTES	#	1 THROUGH 10	1 THROUGH 10

NOTES:

1. PROVIDE POSITIVE SLOPED (IN MIN OF TWO PLANES) STAINLESS STEEL DRAIN PAN WITH DRAIN OUTLET IN BOTTOM OF PAN. DRAIN PAN SHALL EXTEND 8" BEYOND COOLING COIL OR FAN SECTIONS SHALL HAVE DRAIN PANS. COIL CASING, INCLUDING CROSS BRACING, SHALL BE STAINLESS STEEL CONSTRUCTION. PROVIDE RED BRASS (NON–FERROUS) COIL CONNECTIONS, VENTS AND DRAINS AND EXTEND THROUGH THE COIL CASING.
2. PROVIDE DOUBLE WALL UNIT, MINIMUM 2", THROUGHOUT UNIT (INCLUDING BELOW DRAIN PAN) WITH A SOLID INNER LINER. UNIT SHALL HAVE FACTORY FABRICATED DOUBLE WALL FILTER PLENUM MIXING BOX. PROVIDE FULL SIZED HINGED ACCESS DOORS AT PLENUM SECTION, FILTER SECTION, COIL SECTION(S), AND FAN SECTION. BOTH HEATING AND COOLING COILS SHALL BE ACCESSIBLE ON THE UPSTREAM AND DOWNSTREAM SIDE.
3. PROVIDE PREMIUM EFFICIENCY MOTORS. SEE SPECIFICATIONS.
4. UNITS SHALL HAVE INTERNAL VIBRATION ISOLATORS WITH 2" DEFLECTION. UNIT SHALL HAVE 1" NEOPRENE PADS BETWEEN THE BASE RAILS AND THE 4" HOUSEKEEPING PAD.
5. PROVIDE OVERSIZED FANS NOT TO EXCEED RADIATED SOUND POWER PER ASHRAE. PROVIDE REMOTE BEARING LUBRICATION LINES, EXTENDED TO JUST INSIDE THE ACCESS DOOR.
6. PROVIDE SINGLE HEADER ON AFTER FILTERS FOR EFFECTIVE SEALING.
7. PROVIDE MAGNAHELIC DIFFERENTIAL PRESSURE GAGE AT FILTER.
8. FAN RPM AND OUTLET VELOCITY ARE MAXIMUM. PROVIDE OVERSIZED FANS NOT TO EXCEED VALUES INDICATED.
9. PROVIDE ADJUSTABLE PITCH SHEAVE ON FAN MOTORS 10 HP AND LESS.
10. VAV SYSTEM WITH VARIABLE FREQUENCY DRIVE FOR FAN CONTROL. SEE VARIABLE FREQUENCY DRIVE SCHEDULE.

1315 E. SEVENTH AVENUE
SUITE 106
TAMPA, FLORIDA 33605.3607

TELEPHONE 813.242.6677
FACSIMILE 813.242.6683

wilderarchitecture.com

AA26000655

WILDERARCHITECTURE, INC.

AGI
Anston-Greenlees, Inc.
Mechanical & Electrical Consulting Engineers
1315 West Fletcher Avenue, Tampa, FL 33612 Tel(813)963-1919
Email: AGI@agi-engineers.com HTTP://www.agi-engineers.com
Florida Engineering Business Number 6093

NOT FOR CONSTRUCTION

HARRY W. PORTELLOS, P.E. 61597

TO THE BEST OF MY KNOWLEDGE THESE DRAWINGS AND THE PROJECT MANUAL ARE COMPLETE AND COMPLY WITH THE 2017 FLORIDA BUILDING CODE

THIS ITEM HAS BEEN ELECTRONICALLY SIGNED AND SEALED ON THE DATE/TIME STAMP SHOWN USING A DIGITAL SIGNATURE. PRINTED COPIES OF THIS DOCUMENT ARE NOT CONSIDERED SIGNED AND SEALED AND THE SIGNATURE MUST BE VERIFIED ON ANY ELECTRONIC COPIES.

HILLSBOROUGH COUNTY BOARD
OF COUNTY COMMISSIONERS
COUNTY CENTER
601 E KENNEDY BLVD
TAMPA, FL 33601

HILLSBOROUGH COUNTY
NORTHWEST AREA HEAD START

PROJECT #: 2010-00

DISTRIBUTION	DATE
DESIGN DEVELOPMENT	06.11.2020
90% CONST DOCS	08.19.2020

HVAC SCHEDULES

M2.1

Drawing File: I:\20xxx\20033.001\20033m21.dwg M21
Plotted by: bronson Aug 17, 2020 – 11:54am

AIR DISTRIBUTION DEVICE SCHEDULE

MARK		CD1	CD2	RR1	EG1	XG1	XG2	SS1	SR1	LV1
NECK SIZE	INCH	–	–	22x22	–	22x22	–	–	–	ANSI/AMCA 540 & 550 LISTED AND FL PRODUCT APPROVAL
MODULE/FACE SIZE	INCH	24x24/24x24	–	24x24/23x23	–/–	24x24/23x23	–/–	–/–	–/–	
MANUFACTURER	–	J&J	TITUS	TITUS	TITUS	TITUS	TITUS	TITUS	TITUS	RUSKIN
MODEL NUMBER	–	AL1444–33–TR	301FL	PAR–AA	50F	PAR–AA	50F	300FS	350RL	EME6625D
CONSTRUCTION	–	ALUMINUM	ALUMINUM	ALUMINUM	ALUMINUM	ALUMINUM	ALUMINUM	ALUMINUM	STEEL	ALUMINUM
NOTES	–	1, 2, 4	1, 2, 4	1, 4, 6	1, 4, 6, 7	1, 4, 6	4, 6, 7	4	1, 4	3, 4, 5, 8

NOTES:

1. NECK SIZE OF DEVICE IS EQUAL TO THE DUCT SIZE INDICATED ON THE DRAWING.
2. PROVIDE WITH SQUARE TO ROUND ADAPTER. REFER TO PLANS FOR SIZE.
3. COORDINATE COLOR AND FINISH TEXTURE BY SAMPLE SUBMITTAL TO ARCHITECT.
4. SEE PLANS FOR SIZE.
5. PROVIDE TRANSOM MOUNTING FRAME AND INSECT SCREEN WHERE SHOWN OVER DOORS.
6. WHERE GRILLE IS INDICATED TO BE LOCATED IN LAY–IN CEILINGS, PROVIDE 24x24 LAY–IN PANEL BORDER, WHITE IN COLOR.
7. PAINT INSIDE OF DUCT & GRILLE FLAT BLACK WHEN CAN BE SEEN THROUGH FACE OF GRILLE.
8. LOUVER WIND–DRIVEN RAIN PERFORMANCE SHALL BE WITHOUT A DAMPER: 99.9% EFFECTIVE AT PREVENTING WATER PENETRATION THROUGH LOUVER WHEN AMCA–500L TESTED AT 50 MILES PER HOUR WIND WITH 8 INCHES PER HOUR RAINFALL AND 2,155 FEET PER MINUTE AIRFLOW THROUGH THE FREE AREA. PENETRATION CLASS 'A' WITH DISCHARGE CLASS (INTAKE) '3' IN ACCORDANCE WITH AMCA 500–L WIND DRIVEN RAIN TEST. THE LOUVER SHALL BE ANSI/AMCA 540 AND ANSI/AMCA 550 LISTED AND SHALL A FLORIDA PRODUCT APPROVAL.

REMARKS:

A. REFER TO PLANS FOR EXACT LOCATIONS OF ALL DIFFUSERS, GRILLES AND REGISTERS.
B. COORDINATE FRAME STYLES WITH CEILING SYSTEM ACTUALLY FURNISHED.
C. NC VALUES FOR DIFFUSERS, GRILLES AND REGISTERS SHALL NOT EXCEED 35 WITH A ROOM ABSORPTION RATE OF 10db ie.. 10–12 WATTS.
D. REFER TO THE MECHANICAL LEGEND FOR A DESCRIPTION OF THE AIR DEVICE MARK.
E. WHERE THE CONNECTING DUCT OR PLENUM CAN BE OBSERVED THROUGH THE FACE OF THE GRILLE, THE VISIBLE DUCTWORK SHALL BE PAINTED FLAT BLACK.

FAN SCHEDULE

MARK	SERVES	AIRFLOW (CFM)	DRIVE	TIP SPEED (FT/MIN)	FAN SPEED (RPM)	STATIC EFF. (%)	INLET TEMP. (°F)	EXTERNAL S.P. (IN. H_2O)	ELECTRICAL VOLT/ø/Hz	MOTOR HP BHP/HP	SONES	MANUFACTURER	MODEL NUMBER	MOUNTING LOCATION	WEIGHT	INTERLOCK	NOTES
RF1	ERU1 RELIEF AIR	1,200	BELT	7,560	1,974	48	70	2.0	208/1/60	0.88 / 1.0	17.3	GREENHECK	BSQ–140–HP	INLINE	119	AH1	1 THROUGH 8
SF1	ERU1 SUPPLY AIR	1,580	DIRECT	6,148	1,613	48	70	1.5	208/1/60	0.77 / 1.0	14.4	GREENHECK	SQ–140–VG	INLINE	101	AH1	1 THROUGH 8

NOTES:

1. COORDINATE WITH ELECTRICAL DRAWINGS. REFER TO SPECIFICATIONS FOR ADDITIONAL REQUIREMENTS.
2. PROVIDE WITH FACTORY DISCONNECT.
3. PROVIDE REQUIRED CONTACTS AND RELAYS FOR INTERLOCKING FAN WITH LIGHTS AS SCHEDULED.
4. PROVIDE WITH ELECTRIC FAN SPEED CONTROL.
5. CONTROLLED BY LIGHT SWITCH WITH 10 MINUTE TIME DELAY–OFF. SWITCH PROVIDED BY DIVISION 16.
6. PROVIDE WEATHERPROOF WALL CAP.
7. PROVIDE BACKDRAFT DAMPER.
8. PROVIDE WITH MOUNTING BRACKET AND INTEGRATED AIR PRESSURE SENSING SWITCH.

ENERGY RECOVERY UNIT SCHEDULE

MARK		ERU1
RELIEF AIR	CFM	1,200
INTERNAL STATIC PRESSURE (RA/SA)	IN. H_2O	1.0/1.25
OUTSIDE AIR QUANTITY	CFM	1,600
OUTSIDE ENTERING TEMPERATURE DB/WB	°F/°F	91.0 / 80.0
MANUFACTURER	–	CA–INDOOR
MODEL	–	CA3XIN
UNIT WEIGHT	LBS.	500
UNIT LOCATION	–	114 MECH.
SPACE SERVED	–	ENERGY RECOVERY
NOTES	–	1

NOTES:

1. PROVIDE QUARTER TURN FASTENERS FOR ACCESS PANELS.

VARIABLE AIR VOLUME BOX SCHEDULE WITH ELECTRIC HEAT

MARK	MAX. COOLING CFM	MIN. HEATING CFM	MIN. COOLING CFM	TERMINAL SIZE	SOUND (NC) DISCH	SOUND (NC) RAD	HEAT MBH	HEAT KW	HEAT STEPS	POWER	APD	MANUFACTURER	MODEL	NOTES
VAV101	295	95	95	5	21	20	4.2	1.0	SCR	120/1	0.07	TRANE	VCEF	1,2,3,4,5,6
VAV102	155	75	75	4	20	20	3.2	1.0	SCR	120/1	0.03	TRANE	VCEF	1,2,3,4,5,6
VAV103	270	75	75	5	20	20	3.2	1.0	SCR	120/1	0.06	TRANE	VCEF	1,2,3,4,5,6
VAV104	320	85	85	6	20	18	3.7	1.0	SCR	120/1	0.17	TRANE	VCEF	1,2,3,4,5,6
VAV105	400	195	195	6	22	23	8.4	2.5	SCR	120/1	0.20	TRANE	VCEF	1,2,3,4,5,6
VAV106	850	455	455	10	21	21	19.7	6.0	SCR	208/3	0.25	TRANE	VCEF	1,2,3,4,5,6
VAV107	415	195	195	6	22	24	8.4	2.5	SCR	120/1	0.21	TRANE	VCEF	1,2,3,4,5,6
VAV108	745	420	420	8	22	21	18.2	5.5	SCR	208/3	0.33	TRANE	VCEF	1,2,3,4,5,6
subtotal	3,450	1,595	1,595					20.5						

NOTES:

1. DDC CONTROLS BY CONTROLS CONTRACTOR.
2. PROVIDE REINFORCED NON–POROUS FOIL LAMINATE FOR MICROBIAL PROTECTION. LINER SHALL BE SECURED BY STEEL Z CLIPS OR OVERLAPPING PANEL CONSTRUCTION TO SEAL ALL EDGES. THE INSULATION SHALL BE RIGID COMPRESSED GLASS FIBERS, FOUR POUND DENSITY, WITH R3.5 R–VALUE, AND SHALL COMPLY WITH ASTM C665, UL 181, AND NFPA90A.
3. CONTRACTOR SHALL VERIFY PROPER CLEARANCES IN FRONT OF CONTROL HEATER PANELS. PROVIDE WITH INTEGRAL FACTORY MOUNTED SAFETY DISCONNECT, PRIMARY FUSING AND ALL REQUIRED CONTACTS AND RELAYS. COORDINATE WITH ELECTRICAL. PROVIDE FACTORY WIRED CONTROL TRANSFORMER. VAV TERMINAL SHALL HAVE SINGLE POINT POWER CONNECTION.
4. PROVIDE APPROPRIATE DIFFERENTIAL PRESSURE SWITCH TO PROPERLY CONTROL THE HEATER. THE EQUIPMENT SUPPLIER SHALL REVIEW THE DRAWINGS PRIOR TO ORDERING TO ASCERTAIN DUCT PRESSURES.
5. ALL PERFORMANCE DATA SHALL BE BASED ON TESTS CONDUCTED IN ACCORDANCE WITH ASHRAE 130–2008 AND AHRI 880–2008. ALL NC LEVELS DETERMINED USING AHRI 8855–2008, APPENDIX E RATED WITH 1" WG PRESSURE AT THE TERMINAL INLET.
6. PROVIDE MAGNETIC HEATER CONTACTORS.

1315 E. SEVENTH AVENUE
SUITE 106
TAMPA, FLORIDA 33605.3607

TELEPHONE 813.242.6677
FACSIMILE 813.242.6683

wilderarchitecture.com

AA26000655

WILDERARCHITECTURE, INC.

AGI
Anston-Greenlees, Inc.
Mechanical & Electrical Consulting Engineers
1315 West Fletcher Avenue, Tampa, FL 33612 Tel(813)963-1919
Email: AGI@agi-engineers.com HTTP://www.agi-engineers.com
Florida Engineering Business Number 6093

NOT FOR CONSTRUCTION

HARRY W. PORTELLOS, P.E. 61597

TO THE BEST OF MY KNOWLEDGE, THESE DRAWINGS AND THE PROJECT MANUAL ARE COMPLETE AND COMPLY WITH THE 2017 FLORIDA BUILDING CODE

THIS ITEM HAS BEEN ELECTRONICALLY SIGNED AND SEALED ON THE DATE/TIME STAMP SHOWN USING A DIGITAL SIGNATURE. PRINTED COPIES OF THIS DOCUMENT ARE NOT CONSIDERED SIGNED AND SEALED AND THE SIGNATURE MUST BE VERIFIED ON ANY ELECTRONIC COPIES.

HILLSBOROUGH COUNTY BOARD
OF COUNTY COMMISSIONERS
COUNTY CENTER
601 E KENNEDY BLVD
TAMPA, FL 33601

HILLSBOROUGH COUNTY
NORTHWEST AREA HEAD START

PROJECT #: 2010-00

DISTRIBUTION	DATE
DESIGN DEVELOPMENT	06.11.2020
90% CONST DOCS	08.19.2020

HVAC SCHEDULES

M2.2

Drawing File: I:\20xx\20033.001\20033m21.dwg M22
Plotted by: brandon Aug 17, 2020 – 11:54am

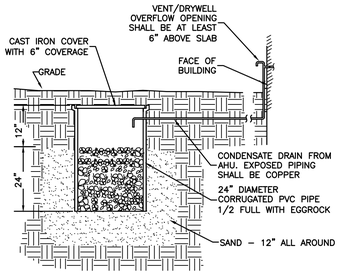

DRYWELL DETAIL
NOT TO SCALE

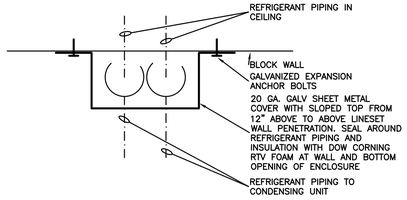

REFRIGERANT PIPING CHASE DETAIL
NOT TO SCALE

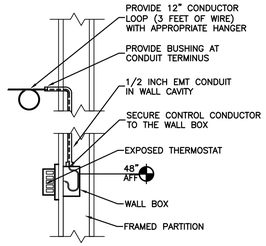

ROOM THERMOSTAT IN GYPBOARD WALL
NOT TO SCALE

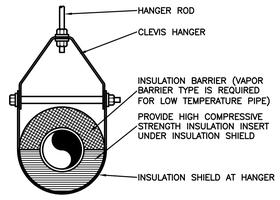

INSULATED PIPE HANGER SUPPORT
NOT TO SCALE

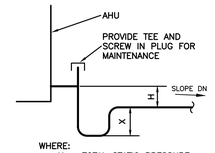

CONDENSATE DRAIN TRAP
NOT TO SCALE

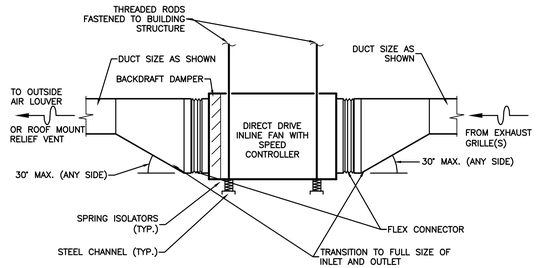

INLINE FAN DETAIL
NOT TO SCALE

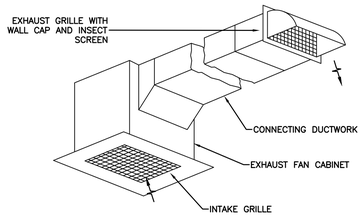

CEILING EXHAUST FAN DETAIL
NOT TO SCALE

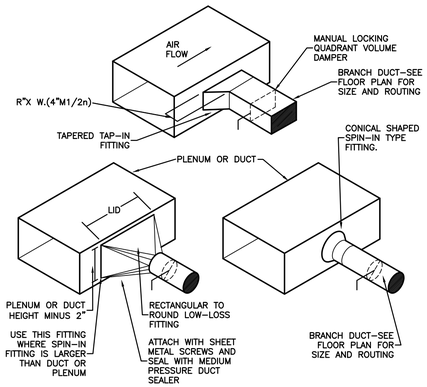

BRANCH DUCT TAKE–OFF DETAIL
NOT TO SCALE

NOTES:
1. PROVIDE FITTING WITH 1" WIDE FLANGE WITH GASKET.
2. MUST MEET SMACNA GUAGE STANDARDS AND 2"W.G. STATIC PRESSSURE.
3. CONTINUOUS WELD LONGITUDINAL SEAM FOR NO LEAKAGE AT 2" W.G. STATIC PRESSURE.

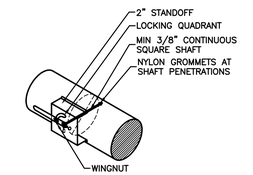

MANUAL LOCKING QUADRANT VOLUME DAMPER

NOTES:
1. WINGNUT ON SHAFT IS UNACCEPTABLE. WINGNUT MUST RIDE IN LOCKING QUADRANT.

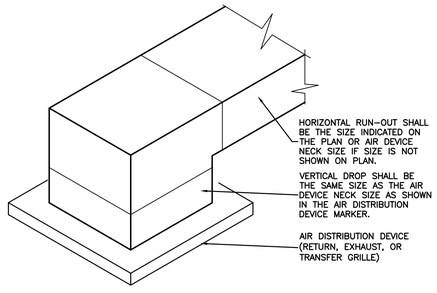

RETURN, EXHAUST, AND TRANSFER DUCT CONNECTIONS
NOT TO SCALE

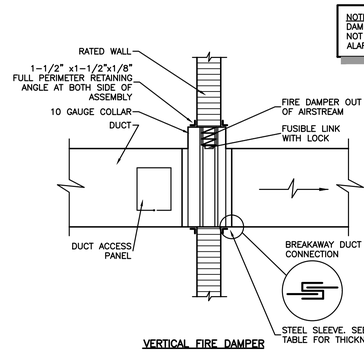

VERTICAL FIRE DAMPER

DUCT DIMENSION	SLEEVE GAUGE
12" DOWN	26
13"–30"	24
31"–54"	22
55"–84"	20
85" UP	18

NOTE: PROVIDE DYNAMIC TYPE FIRE DAMPERS ON AIR SYSTEMS THAT DO NOT SHUT DOWN ON CALL FROM FIRE ALARM OR FIRESTAT.

FIRE DAMPER DETAILS
NOT TO SCALE

NOTE: SECURE INSULATION WITH WELDED STICK PINS ON DUCTWORK 24" AND LARGER. ALL JOINTS SHALL BE FABRIC TAPED AND MASTIC COATED WITH #8 MASTIC BY RCD CORPORATION.

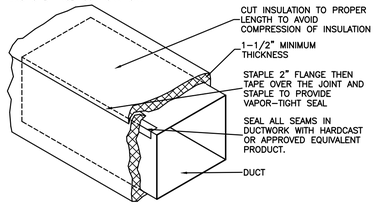

TYPICAL DUCT WRAPPING DETAIL
NOT TO SCALE

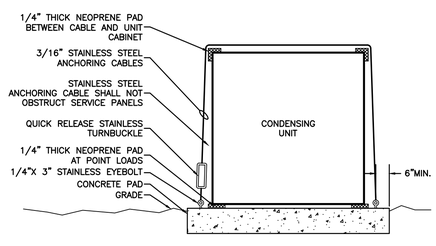

NOTE: PROVIDE A MINIMUM OF TWO CABLES WITH FOUR ANCHOR CONNECTIONS TO PAD.

CONDENSING UNIT TIE DOWN
NOT TO SCALE

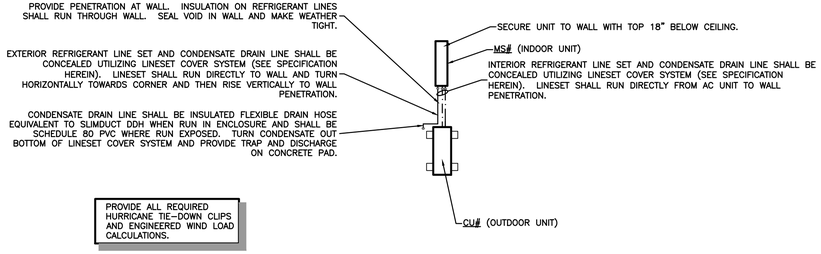

MINI–SPLIT SYSTEM INSTALLATION
NOT TO SCALE

NOTE: REFER TO SCHEDULE FOR MOUNTING AND LINESET ACCESSORIES.

1315 E. SEVENTH AVENUE
SUITE 106
TAMPA, FLORIDA 33605.3607

TELEPHONE 813.242.6677
FACSIMILE 813.242.6683

wilderarchitecture.com

AA26000655

WILDERARCHITECTURE, INC.

AGI
Anston-Greenlees, Inc.
Mechanical & Electrical Consulting Engineers
1315 West Fletcher Avenue, Tampa, FL 33612 Tel(813)963-1919
Email: AGI@agi-engineers.com HTTP://www.agi-engineers.com
Florida Engineering Business Number 6093

NOT FOR CONSTRUCTION

HARRY W. PORTELLOS, P.E. 61597

TO THE BEST OF MY KNOWLEDGE, THESE DRAWINGS AND THE PROJECT MANUAL ARE COMPLETE AND COMPLY WITH THE 2017 FLORIDA BUILDING CODE

THIS ITEM HAS BEEN ELECTRONICALLY SIGNED AND SEALED ON THE DATE/TIME STAMP SHOWN USING A DIGITAL SIGNATURE. PRINTED COPIES OF THIS DOCUMENT ARE NOT CONSIDERED SIGNED AND SEALED AND THE SIGNATURE MUST BE VERIFIED ON ANY ELECTRONIC COPIES.

HILLSBOROUGH COUNTY BOARD
OF COUNTY COMMISSIONERS
COUNTY CENTER
601 E KENNEDY BLVD
TAMPA, FL 33601

HILLSBOROUGH COUNTY
NORTHWEST AREA HEAD START

PROJECT #: 2010-00

DISTRIBUTION	DATE
DESIGN DEVELOPMENT	06.11.2020
90% CONST DOCS	08.19.2020

HVAC DETAILS

M3.1

Drawing File: i:\20xxx\20033.001\20033m31.dwg M31
Plotted by: brandon Aug 17, 2020 - 11:54am

TEMPERATURE CONTROLS POINT SCHEDULE

SYSTEM	HARDWARE: OUTPUT DIGITAL	HARDWARE: OUTPUT ANALOG	HARDWARE: INPUT DIGITAL	HARDWARE: INPUT ANALOG	ALARMS DIGITAL	ALARMS ANALOG	SOFTWARE: EMCS FUNCTIONS	NOTES
POINT DESCRIPTION	CONTROL RELAY; SOLENOID VALVE; CONTACTOR (AS REQ'D.); TRIGGER; PRESSURE TRANSDUCER; ELECTRONIC TRANSDUCER; 4-20 mA TRANSDUCER; 0-10 VDC MODULE	PRESSURE SWITCH STATUS; FLOW SWITCH STATUS; SWITCH CLOSURE; AUXILIARY CONTACT; CW CURRENT RELAY; TEMPERATURE; RELATIVE HUMIDITY; PRESSURE SENSOR; POSITION; CO2; AMP/OHM STATUS; EQUIPMENT MAINTENANCE; CO2 SENSOR	HIGH LIMIT; LOW LIMIT; RUN TIME	SCHEDULED START/STOP; OPTIMUM START/STOP; DUTY CYCLING; DEMAND LIMITING; DAY/NIGHT SETBACK; ECONOMIZER; ENTHALPY RECIRCULATION; TEMPERATURE CONTROL; HOT/COLD DECK RESET; REHEAT COIL RESET; HOT WATER BOILER OPTIMIZATION; LOW AIR RESET; CHILLED WATER RESET; CHILLER OPTIMIZATION; CONDENSER WATER RESET; CHILLER DEMAND LIMIT; VALVE CONTROL; LIGHTING CONTROL		
VAV SYSTEM (AH#)								
MAIN UNIT								
AHx RETURN AIR TEMP (TEx-1)			X		X			3
AHx RETURN HUMIDITY (HEx-1)			X		X			
AHx CHILLED WATER VALVE (Vx-2)		X						
AHx FAN STATUS (CSx-1)			X					
AHx START/STOP (MSx-1)	X			X	X	X		2
AHx FAN VARIABLE FREQUENCY DRIVE (AOx-1)		X						
AHx UNIT LVG COIL TEMP (TEx-3)			X		X			
AHx DUCT STATIC PRESSURE (Px-1)				X				
AHx RETURN AIR MODULATING DAMPER (Dx-1)	X	X						
OA PATH								
AHx MODULATING DAMPER (Dx-2)	X	X						
AHx OA CHILLED WATER VALVE (Vx1)		X						
AHx OA LVG COIL TEMP (TEx-2)			X		X			
SFx SUPPLY FAN (SF#)								
SFx FAN STATUS (CSx-2)			X					
SFx START/STOP (MSx-2)	X			X	X	X		2
RFx RELIEF FAN (RF#)								
RFx FAN STATUS (CSx-2)			X					
RFx START/STOP (MSx-2)	X			X	X	X		2
VAVx VAV ZONE TEMP SENSOR (# POINTS)			X					
VAVx VAV BOX DAMPER (# POINTS)		X						
VAVx VAV BOX HEATER (# POINTS)	X							

FOR EACH VAV BOX

NOTES:
1. PROVIDE STARTING RELAY AND CONTACTOR IN CONTROL PANEL RATED FOR MOTOR LOAD.
2. ROUTE CIRCUIT THROUGH THE MOTOR STARTER.
3. REMOTE BULB THERMOSTAT WITH BULB IN RA DUCT. THERMOSTAT LOCATION INDICATED ON PLANS.
4. REFER TO FAN SCHEDULE NOTE 2 TO IDENTIFY APPLICABLE POINTS.
5. PROVIDE OPEN PROTOCOL INTERFACE AND ALL HARDWARE TO ALLOW FULL USER INTERFACE BETWEEN DIGITAL CHILLER CONTROL PANEL AND EMCS.

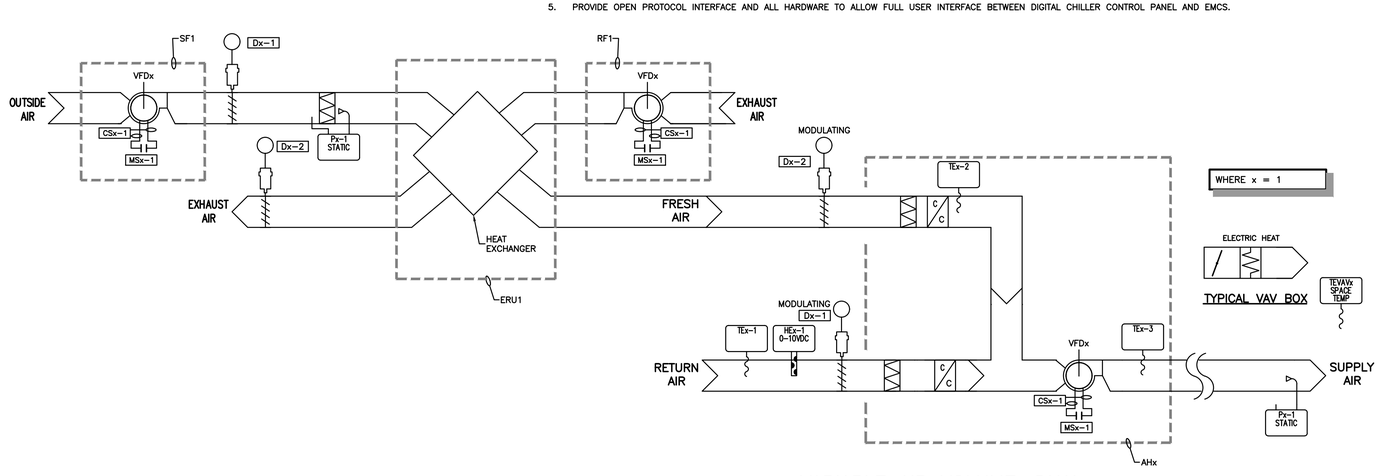

VARIABLE AIR VOLUME, DUAL PATH AIR HANDLER FLOW DIAGRAM (AH1)
NOT TO SCALE

AIRSIDE TEMPERATURE CONTROL SEQUENCES

Variable Air Volume, dual path Air Handler with dehumidification (AHx)

A. The air handler shall be started and stopped by the DDC control system on a schedule as directed by the Owner. The EMS shall enable the air handler supply air fan. The outside air damper and zone relief fan shall be interlocked with the air handler so that the outside air damper will open and the relief fan will run when the air handler is running after a 30 minute time delay for morning warm up/cool down cycle and will be disabled when the air handler is disabled.

B. Cooling mode: In the cooling mode, compressors shall modulate to maintain the supply air temperature set point indicated in the air handler schedule as sensed by the supply air temperature sensor. The outside air path shall be the first stage of cooling and the return air path shall be the second stage of cooling. On a further rise in return air temperature, the return air path cooling coil shall stage on and modulate. The variable frequency drive on the supply air fan shall modulate the supply air volume to maintain a constant pressure (resettable) at the duct static pressure sensors (two per system). The modulating dampers in the outside air duct and return air duct shall modulate to maintain a constant fresh air supply to the air handler as indicated in the air handler schedule.

C. Dehumidification mode: When the return air humidity exceeds 55% RH as sensed by the return air humidity sensor, outside air path coil shall stage on and modulate to the scheduled leaving air temperatures. The electric heaters in the VAV boxes shall stage on to maintain temperature setpoint in the zones. The sahll modualte when the space humidity is satisfied.

D. Heating mode: In the heating mode, the compressors shall stage off. The electric heaters in the VAV boxes shall stage on to maintain temperature setpoint in the zones.

Variable Air Volume Boxes

A. Each variable air volume box shall modulate from fully open at 76°F (adjustable) and to the minimum position at 74°F (adjustable) in the cooling mode. The electric heater shall stage in the heating mode at minimum (or heating) air volume as scheduled to maintain the space heating temperature at 70°F (adjustable). The EMS shall monitor air volume through the box and supply air temperature after the heating coil. The VAV boxes shall be continuously controlled and monitored from the EMS.

1315 E. SEVENTH AVENUE
SUITE 106
TAMPA, FLORIDA 33605.3607

TELEPHONE 813.242.6677
FACSIMILE 813.242.6683

wilderarchitecture.com

AA26000655

WILDERARCHITECTURE, INC.

AGI
Anston-Greenlees, Inc.
Mechanical & Electrical Consulting Engineers
1315 West Fletcher Avenue, Tampa, FL 33612 Tel(813)963-1919
Email: AGI@agi-engineers.com HTTP://www.agi-engineers.com
Florida Engineering Business Number 6093

NOT FOR CONSTRUCTION

HARRY W. PORTELLOS, P.E. 61597
TO THE BEST OF MY KNOWLEDGE, THESE DRAWINGS AND THE PROJECT MANUAL ARE COMPLETE AND COMPLY WITH THE 2017 FLORIDA BUILDING CODE

THIS ITEM HAS BEEN ELECTRONICALLY SIGNED AND SEALED ON THE DATE/TIME STAMP SHOWN USING A DIGITAL SIGNATURE. PRINTED COPIES OF THIS DOCUMENT ARE NOT CONSIDERED SIGNED AND SEALED AND THE SIGNATURE MUST BE VERIFIED ON ANY ELECTRONIC COPIES.

HILLSBOROUGH COUNTY BOARD
OF COUNTY COMMISSIONERS
COUNTY CENTER
601 E KENNEDY BLVD
TAMPA, FL 33601

HILLSBOROUGH COUNTY
NORTHWEST AREA HEAD START

PROJECT #: 2010-00	
DISTRIBUTION	DATE
DESIGN DEVELOPMENT	06.11.2020
90% CONST DOCS	08.19.2020

HVAC CONTROLS

M4.1

Drawing File: i:\20xxx\20033.001\20033m41.dwg M41
Plotted by: brandon Aug 17, 2020 - 11:54am

GENERAL PLUMBING NOTES

1. ALL PLUMBING WORK SHALL MEET ALL OF THE REQUIREMENTS OF THE FOLLOWING:
   A. FLORIDA BUILDING CODE (FBC) 6TH EDITION (2017): THIS CODE INCLUDES THE 2017 FBC BUILDING, MECHANICAL, PLUMBING, ENERGY CONSERVATION, FUEL GAS, ACCESSIBILITY, AND TEST PROTOCOLS VOLUMES. FURTHER, SEE "REFERENCED STANDARDS" IN THE FBC BUILDING CHAPTER 35; FBC MECHANICAL CHAPTER 15; FBC PLUMBING CHAPTER 14; FBC ENERGY CONSERVATION CHAPTER 6; AND FBC FUEL GAS CHAPTER 8) (EFFECTIVE DECEMBER 31, 2017)
   B. 6TH EDITION OF THE FLORIDA FIRE PREVENTION CODE (FFPC): (THIS CODE ALSO INCLUDES THE FLORIDA VERSIONS OF NFPA 1 AND NFPA 101.) (EFFECTIVE DECEMBER 31, 2017)
   C. 2014 NATIONAL ELECTRIC CODE
2. PROVIDE COMPLETE PLUMBING SYSTEMS AS DETAILED. WORK CONSISTS OF FURNISHING ALL MATERIALS, EQUIPMENT, AND SERVICES REQUIRED FOR COMPLETE SYSTEMS.
3. IN GENERAL, PLANS ARE SCHEMATIC ONLY AND SHOULD NOT BE SCALED.
4. ALL FLOOR DRAINS IN MECHANICAL ROOMS/CLOSETS, SHALL BE FIELD VERIFIED AND COORDINATED WITH THE HVAC EQUIPMENT/PAD LOCATIONS.
5. CONDITIONS SHOWN AS EXISTING ARE BASED ON AVAILABLE DATA AND SHOULD BE INTERPRETED TO BE APPROXIMATE. VERIFY EXISTING CONDITIONS IN THE FIELD.
6. COORDINATE WITH OTHER TRADES TO AVOID CONFLICTS.
7. COORDINATE LOCATIONS OF FLOOR DRAINS, CLEAN OUTS AND FLOOR HYDRANTS WITH THE ARCHITECTURAL DRAWINGS.
8. UNLESS OTHERWISE NOTED, ALL PIPING SHALL BE RUN IN CONCEALED SPACES.
9. WATER PIPING SHALL BE HARD DRAWN COPPER TYPE L WITH WROUGHT COPPER FITTINGS AND 95-5 SOLDER.
10. ALL SOIL, WASTE, AND VENT PIPING SHALL BE SCHEDULE 40 PVC DWV.
11. VENT THROUGH ROOF TERMINALS SHALL BE LOCATED 10'-0" AWAY FROM ANY BUILDING INTAKE OPENINGS. COORDINATE WITH THE MECHANICAL CONTRACTOR.
12. GATE VALVES SHALL BE #125 BRONZE WITH UNION BONNET.
13. ALL FIRE STOPPING SHALL BE INSTALLED IN CONFORMANCE WITH THE MANUFACTURER'S U.L. DETAILS OF THE PRODUCTS USED SPECIFICALLY ON THIS PROJECT. APPLICABLE U.L. DETAILS SHALL BE SUBMITTED FOR THE ENGINEER'S REVIEW AND A COPY SHALL BE AVAILABLE ON SITE FOR USE BY THE AUTHORITY HAVING JURISDICTION.
14. UNLESS NOTED OTHERWISE, ALL PLUMBING EQUIPMENT, MATERIALS, AND WORKMANSHIP SHALL BE GUARANTEED FOR A ONE YEAR PERIOD FROM DATE OF ACCEPTANCE.
15. PROVIDE ALL CUTTING REQUIRED FOR THE INSTALLATION OF PLUMBING WORK. FINISH PATCHING SHALL BE COORDINATED WITH THE GENERAL CONTRACTOR/CONSTRUCTION MANAGER.
16. ALL SOIL AND WASTE PIPING 2-1/2" AND SMALLER SHALL BE SLOPED AT 1/4" PER FOOT. LARGER WASTE PIPING SHALL BE SLOPED AT 1/8" PER FOOT.
17. ALL WATER PIPING SHALL BE SUPPORTED RIGIDLY AND IN LINE FROM THE BUILDING STRUCTURE. OFFSET PIPING TO AVOID STRUCTURAL MEMBERS, CANTS, FLASHING, MECHANICAL AND ELECTRICAL EQUIPMENT, ETC.
18. PRIOR TO COMMENCING ANY PLUMBING ROUGH-IN, THE EXISTING SANITARY PIPING SHALL BE EXCAVATED. VERIFY THE EXACT SIZE, LOCATION, INVERT AND DIRECTION OF FLOW. NOTIFY THE ENGINEER IMMEDIATELY IF THE DRAIN IS SMALLER THAN INDICATED OR IF THE INVERT WILL NOT BE LOW ENOUGH FOR THE NEW PLUMBING ROUGH-IN.
19. VERIFY ALL SITE RELATED SANITARY & WATER CONNECTIONS PRIOR TO STARTING WORK. SHOULD DEPTHS BE DIFFERENT THAN THAT SHOWN HEREIN ADVISE ENGINEER IMMEDIATELY.
20. PRIOR TO SITE UTILITIES WORK, CALCULATE THE INVERTS FOR ALL SANITARY WASTE CONNECTIONS BASED ON ACTUAL CONDITIONS. COORDINATE SANITARY WASTE LOCATIONS AND INVERTS WITH SITE UTILITIES CONTRACTOR.
21. WASTE LINES RECEIVING BELOW AMBIENT TEMPERATURE CONDENSATE SHALL BE INSULATED WITH 1/2" FLEXIBLE UNICELLULAR FOAM (ARMAFLEX OR EQUIVALENT) INSULATION TO GRADE.
22. VALVES AND FITTINGS SHALL BE OF SAME SIZE OF LINE ON WHICH THEY ARE INDICATED.
23. INSTALL WATER HAMMER SHOCK ARRESTORS AT EACH FIXTURE OR BATTERY OF FIXTURES. ARRESTORS SHALL BE FACTORY FABRICATED. INSTALL ARRESTORS AND SIZE PER PLUMBING AND DRAINAGE INSTITUTE STANDARD P.D.I WH-201. AIR CHAMBERS SHALL NOT BE CONSIDERED EQUIVALENT TO WATER HAMMER SHOCK ARRESTORS.
24. PROVIDE TRAP PRIMERS WHERE REQUIRED BY CODE.
25. ALL FLOOR DRAINS SHALL BE PROVIDED WITH TRAP PRIMER VALVE AND FITTINGS.
26. ROUTE ALL PIPING CONCEALED ABOVE CEILINGS, WITHIN WALLS, OR IN CHASES EXCEPT WHERE SPECIFICALLY NOTED OR IN THE MECHANICAL ROOM. ANY PIPING EXPOSED TO VIEW SHALL BE RELOCATED AT NO ADDITIONAL COST TO THE OWNER IF DETERMINED BY THE OWNER TO BE OBJECTIONABLE.
27. PROVIDE ACCESS PANELS TO ALL VALVES WITHIN CHASES OR ABOVE NON- ACCESSIBLE CEILINGS. REFER TO ARCHITECTURAL DRAWINGS FOR CEILING TYPES.
28. PROVIDE DIELECTRIC ISOLATION/SEPARATION (I.E. UNIONS) AT CONNECTIONS OF DISSIMILAR METALS.
29. ROUGH-IN ALL WASTE AND SUPPLIES TO SPECIAL EQUIPMENT ACCORDING TO MANUFACTURE'S SHOP DRAWINGS AND MAKE FINAL CONNECTIONS TO RENDER EQUIPMENT FULLY OPERATIONAL. ALL SUPPLIES SHALL BE VALVED. PROVIDE VACUUM BREAKERS OR CHECK VALVES WHERE REQUIRED BY AUTHORITY HAVING JURISDICTION.
30. ALL EXPOSED PLUMBING PENETRATIONS SHALL HAVE ESCUTCHEON PLATES.
31. ANY PLUMBING ITEMS EXPOSED TO VIEW SHALL BE PLACED PER THE ARCHITECTURAL DRAWINGS.
32. PROVIDE A BLUE STICKER ON CEILING GRID TEE BELOW ANY WATER VALVE ABOVE CEILING FOR LOCATION FACILITATION.
33. SEE 8x11 SPECIFICATIONS FOR ADDITIONAL REQUIREMENTS.

PLUMBING FIXTURE SCHEDULE

MARK	DESCRIPTION	SELECTION	W OR S	TRAP	VENT	HW	CW
P1 WATER CLOSET	HANDICAPPED ** BOWL: WHITE FLOOR MOUNTED WITH BOTTOM OUTLET, VITREOUS CHINA, SIPHON-JET, ELONGATED BOWL, 18" AFF TO RIM, BOLT CAPS WITH CAULK, LOW CONSUMPTION FLUSH (1.6 GPF). BOWL AND SEAT DIMENSIONS MUST MATCH WITHIN 1/4". SEAT: WHITE SOLID PLASTIC, HEAVY DUTY, ELONGATED, OPEN FRONT (WITHOUT COVER), STAINLESS STEEL SELF-SUSTAINING CHECK HINGES, INTEGRAL MOLDED BUMPERS. FLUSH VALVE ASSEMBLY: 1-1/2" HIGH ABOVE RIM, EXPOSED DIAPHRAGM VALVE (1.6 GALLON FLUSH), CHROME FINISH, ADA COMPLIANT NON-HOLD-OPEN HANDLE, 1" INLET, 1-1/2" OUTLET, INTEGRAL SCREWDRIVER ADJUSTABLE ANGLE STOP AND CHECK VALVE WITH COVER, VACUUM BREAKER, WALL AND SPUD FLANGES, SWEAT SOLDER ADAPTER KIT, SOLID RING PIPE SUPPORT. ROUGH-IN DIMENSION MUST ALLOW FOR FLUSH VALVE CLEARANCE OF HANDICAPPED GRAB BAR WHERE APPLICABLE, OR OFFSET FITTING MAY BE REQUIRED.	BRIGGS 7790 BENEKE 523-SS NCH SLOAN ROYAL 111-1.6-YB-YK	4"	INT.	2"	–	1"
P2 WATER CLOSET	HANDICAPPED **/NON-HANDICAPPED PRESCHOOL ONLY BOWL: WHITE FLOOR MOUNTED WITH BOTTOM OUTLET, VITREOUS CHINA, SIPHON-JET, ELONGATED BOWL, 10" AFF TO RIM, BOLT CAPS WITH CAULK, LOW CONSUMPTION FLUSH (1.6 GPF). BOWL AND SEAT DIMENSIONS MUST MATCH WITHIN 1/4". SEAT: WHITE SOLID PLASTIC, HEAVY DUTY, ELONGATED, OPEN FRONT (WITHOUT COVER), STAINLESS STEEL SELF-SUSTAINING CHECK HINGES, INTEGRAL MOLDED BUMPERS. FLUSH VALVE ASSEMBLY: 1-1/2" HIGH ABOVE RIM, EXPOSED DIAPHRAGM VALVE (1.6 GALLON FLUSH), CHROME FINISH, ADA COMPLIANT NON-HOLD-OPEN HANDLE, 1" INLET, 1-1/2" OUTLET, INTEGRAL SCREWDRIVER ADJUSTABLE ANGLE STOP AND CHECK VALVE WITH COVER, VACUUM BREAKER, WALL AND SPUD FLANGES, SWEAT SOLDER ADAPTER KIT, SOLID RING PIPE SUPPORT. ROUGH-IN DIMENSION MUST ALLOW FOR FLUSH VALVE CLEARANCE OF HANDICAPPED GRAB BAR WHERE APPLICABLE, OR OFFSET FITTING MAY BE REQUIRED.	ELJER 111-0335 BENEKE 523-SS NCH SLOAN ROYAL 111-1.6-YB-YK	4"	INT.	2"	–	1"
P3 LAVATORY	HANDICAPPED ** HOT/COLD WATER – K to ADULT BOWL: WHITE, WALL MOUNTED, ENAMELED CAST IRON, 20"x18", ADA COMPLIANT 4" CENTER FAUCET HOLE. PROVIDE FLOOR MOUNTED WALL CARRIER WITH CONCEALED CARRIER ARMS. MOUNT AS FOLLOWS: APPLICATION / APRON(MIN) / RIM(MAX) PRESCHOOL 22" 27" K – 7TH GRADE 26" 31" 8TH GRADE – ADULT 29" 34" FAUCET: CHROME FINISHED SELF-CLOSING MIXING FAUCET, METERING TYPE WITH ADJUSTABLE TIME CYCLE (0.35GPM/10 SECONDS MINIMUM), ADA COMPLIANT PUSH HANDLES, VANDAL RESISTANT AERATOR. DRAIN: FLAT GRID, CHROME FINISH, 1-1/4" OUTLET WITH ADA COMPLIANT OFFSET TAILPIECE. PROVIDE PROTECTIVE INSULATION AS REQUIRED BY ADA. P-TRAP: CHROME FINISHED WITH TWO UNIONS, 1-1/4" INLET AND 1-1/2" OUTLET, WITHOUT CLEANOUT, WALL ESCUTCHEON, WASTE LINE INSULATION. SUPPLY: TWO REQUIRED, CHROME PLATED, LOOSE KEY ANGLE VALVE, WALL ESCUTCHEON, FLEXIBLE TUBE RISER, 3/8" INLET AND OUTLET CONNECTIONS. PROVIDE PROTECTIVE INSULATION AS REQUIRED BY ADA**. MIXING VALVE: THERMOSTATICALLY CONTROLLED POINT OF USE MIXING VALVE. LEAD FREE. ASSE 1070 COMPLIANT. SET TEMPERATURE TO 85°F. RUN 3/8"TW TO FAUCET.	KOHLER 2867 WATTS TCA-411 CHICAGO 802A-665-E39VPJKCP MCGUIRE 155WC MCGUIRE 8902CNC PLUMBEREX "PRO-2000" MCGUIRE 2165CCLK MCGUIRE PW-2150WC W/155WC & 8902 SYMMONS 7-210-CK	2"	1-1/4"	1-1/4"	3/8"(1) – 3/8"TW 3/8" 3/8"TW	1/2"(1) – 3/8" 3/8" OUT
P4 SINK	HANDICAPPED **/NON-HANDICAPPED HOT/ COLD WATER (SINGLE BOWL) – P through ADULT BOWL: SINGLE BOWL, STAINLESS STEEL, COUNTERTOP-MOUNTED 18 GAUGE-TYPE 302, SELF RIM, OVERFLOW, 19-1/2"x19"x6-1/2" OVERALL, ONE FAUCET HOLE IN CENTER OF SIDE LEDGE AS REQUIRED FOR ACCESSIBILITY, ADA COMPLIANT. FAUCET: 6" HIGH OUTLET, AERATOR (2 GPM), LEVER HANDLE, CHROME FINISHED, ADA COMPLIANT DRAIN: FLAT GRID STRAINER WITHOUT STOPPER, 1-1/2" OUTLET. P-TRAP: CHROME FINISHED WITH TWO UNIONS, 1-1/2" INLET AND OUTLET, WITHOUT CLEANOUT. SUPPLY: TWO REQUIRED, CHROME PLATED, LOOSE KEY ANGLE VALVES, WALL ESCUTCHEON, FLEXIBLE TUBE RISER, 3/8" INLET CONNECTIONS. MIXING VALVE: THERMOSTATICALLY CONTROLLED POINT OF USE MIXING VALVE. LEAD FREE. ASSE 1070 COMPLIANT. SET TEMPERATURE TO 105°F.	ELKAY LRAD 1919 (CUSTOM PUNCH) CHICAGO 50-GN2A-E3-369 ELKAY LK-18 MCGUIRE 8912CNC MCGUIRE 2165CCLK SYMMONS 7-225-CK	2"	2"	2"	1/2"	1/2"
P5 TRIPLE BOWL SINK	HANDICAPPED ** /NON-HANDICAPPED HOT/ COLD WATER (TRIPLE BOWL) – P through ADULT BOWL: THREE COMPARTMENT, STAINLESS STEEL, 16 GAUGE-TYPE 302, 72.5"x25.75"x45" INCHES OVERALL, TWO FAUCET HOLES IN CENTER OF BACK LEDGE. FAUCET: 14 INCH L-TYPE SWING SPOUT, VANDAL PROOF LEVER HANDLES, CHROME FINISHED, ADA COMPLIANT. DRAIN: CONICAL STRAINER WITH STOPPER, 1-1/2 INCH OUTLET. DRAIN CONNECTION: BRASS CHROME PLATED, OUTLET SUPPLY: TWO REQUIRED, CHROME PLATED, LOOSE KEY ANGLE VALVES, WALL ESCUTCHEON, FLEXIBLE TUBE RISER, 3/8" INLET CONNECTIONS. MIXING VALVE: THERMOSTATICALLY CONTROLLED POINT OF USE MIXING VALVE. LEAD FREE. ASSE 1070 COMPLIANT. SET TEMPERATURE TO 105°F.	ELKAY 14-3C16X20-R-18X CHICAGO 540-LDL15E1WXFABCP ELKAY LK-35 MCGUIRE 165 SYMMONS 7-225-CK	2"	2"	2"	1/2"	1/2"
P6	HANDWASH SINK W/ HOT/COLD WATER CHILD CARE, BOWL: SINGLE BOWL, COUNTERTOP-MOUNTED STAINLESS STEEL, 18 GAUGE – TYPE 302, 15 X 15 X 6-1/2 INCHES OVERALL, ONE FAUCET IN CENTER OF BACK LEDGE (ONE HOLE PUNCH.) FAUCET: 6" HIGH OUTLET, AERATOR (2 GPM), LEVER HANDLES, CHROME FINISHED, ADA COMPLIANT DRAIN: FLAT GRID STRAINER WITHOUT STOPPER, 1-1/2 INCH OUTLET P-TRAP: CHROME FINISHED WITH TWO UNIONS, 1-1/2 INCH INLET AND OUTLET, WITHOUT CLEANOUT. SUPPLY: TWO REQUIRED, CHROME PLATED, LOOSE KEY ANGLE VALVES, WALL ESCUTCHEON, FLEXIBLE TUBE RISERS, 3/8" INLET CONNECTIONS MIXING VALVE: THERMOSTATICALLY CONTROLLED POINT OF USE MIXING VALVE. LEAD FREE. ASSE 1070 COMPLIANT. SET TEMPERATURE TO 105°F.	ELKAY BLR-15 CHICAGO 50-GN2A-E3-369 ELKAY LK-18 MCGUIRE 8912CNC SYMMONS 7-225-CK	2"	2"	2"	1/2"	1/2"
P7	NOT USED.	–	–	–	–	–	–
P8	HANDICAPPED** TWO LEVEL ELECTRIC WATER COOLER, WHEELCHAIR ACCESS, NON-RECESSED, STAINLESS STEEL TOP AND SIDES, WITH FRONT AND SIDE PRESSBARS, GRID STRAINER AND SAFETY BUBBLER. 4.4 GPH @ 30°F TEMPERATURE DIFFERENCE. 4.8AMPS @ 120V/1Ø/60HZ. 1-1/4" P-TRAP. CAST BRASS WITHOUT CLEAN OUT. 1/2" STOP. MOUNT WITH BUBBLER AT 30" & 36" AFF.	ELKAY EZSTL8C-SS MCGUIRE 8902CNC	2"	1-1/4"	1-1/4"	–	1/2"
P9	SERVICE SINK ONE-PIECE CONSTRUCTION, 24"x24"x10", FLOOR MOUNTED TYPE. FAUCET WITH PAIL HOOK AND HOSE END, VACUUM BREAKER, INTEGRAL STOPS, VANDAL PROOF HANDLE MOP HANGER, 24" X 3". 18 GA. STAINLESS STEEL BUMPER GUARD. 12 OZ. SILICONE SEALANT. 30" HOSE AND BRACKET COMBINATION.	FIAT MSB 2424 CHICAGO 305-VB-R-VPH FIAT 889-CC FIAT 833-AA FIAT 832-AA	2"	2"	2"	1/2"	1/2"
P10	RESIDENTIAL TYPE CLOTHES WASHING MACHINE ROUGH-IN AND MAKE ALL CONNECTIONS. 2" P.V.C. DRAIN COMPLETE WITH TWO 1/2" HOSE BIBBS AND 7-1/2" X 9" X 3-1/2" BOX. NOTE: PROVIDE 4" BOX IN STUD WALLS, 5-7/8" BOX IN CONCRETE BLOCK WALLS. PROVIDE WITH LINT TRAP.	APPLIANCE PROVIDED UNDER ANOTHER DIVISION WATER-TITE W4700TM	2"	2"	2"	1/2"	1/2"
P11	RESIDENTIAL TYPE VALVE BOX FOR RESIDENTIAL REFRIGERATOR AND DISHWASHER ROUGH-IN AND MAKE ALL CONNECTIONS. ONE 1/2" HOSE BIBB AND 7-1/2" X 9" X 3-1/2" BOX. NOTE: PROVIDE 4" BOX IN STUD WALLS.	WATER-TITE 9700	–	–	–	–	1/2"

** FIXTURE AND ALL ATTACHMENTS SHALL COMPLY WITH THE FBC/ACCESSIBILITY CODE AND THE AMERICANS WITH DISABILITIES ACT, ACCESSIBILITY GUIDELINES FOR BUILDINGS AND FACILITIES; CHILDREN'S FACILITIES. FIXTURE TO BE MOUNTED PER THIS SCHEDULE UNLESS NOTED OTHERWISE IN PLAN. FLUSH VALVE HANDLE IS TO BE ON THE SIDE TOWARDS THE ASSOCIATED LAVATORY WHERE APPLICABLE.

(1) BRANCH RUNOUT TO FIXTURE LINE SIZE. PROVIDE TEE IN CW LINE AFTER STOP TO RUN TO MIXING VALVE AND FAUCET. RUN HW TO MIXING VALVE.

PLUMBING EQUIPMENT SCHEDULE

MARK	DESCRIPTION	SELECTION	W OR S	TRAP	VENT	HW	CW
FD1	FLOOR DRAIN 3" FLOOR DRAIN WITH TRAP PRIMER CONNECTED TO DOMESTIC COLD WATER LINE AT LAVATORY. NICKEL BRONZE TOP. 6" ROUND. CAST IRON BODY WITH FLASHING COLLAR AND ADJUSTABLE STRAINER.	SMITH 2005-A-6"	3"	3"	1-1/2"	–	–
HB1	HOSE BIBB RECESSED WALL HYDRANT WITH LOOSE KEY HANDLE AND 3/4" HOSE THREADE OUTLET, INTEGRAL ANTI-SIPHON, VACUUM BREAKER. MOUNT 18" ABOVE GRADE. COORDINATE MTG. HEIGHT WITH GRADING PLAN.	ZURN Z-1330 WOODFORD B75 B75 B75-BR-MH	–	–	–	–	3/4"
WCO	CAST IRON TEE WALL CLEAN-OUT WITH BRONZE PLUG AND ROUND STAINLESS STEEL COVER PLATE. SIZE C.O. SAME AS LINE SIZE (2-1/2" MINIMUM). PROVIDE PVC TO NO-HUB ADAPTERS FOR PVC DWV APPLICATIONS.	SMITH 4351S-Y	2-1/2" MIN.	–	–	–	–
VTR	VENT THROUGH ROOF WITH VANDALPROOF VENT CAP SIZE AS INDICATED ON DRAWINGS.	WADE W-3680	–	–	–	–	–
TP	TRAP PRIMER TAILPIECE. GRAVITY FED DEVICE WITH NO MECHANICAL PARTS. 1-1/4" TAILPIECE WITH 1/2" NOMINAL ARM FOR CONNECTION TO FLOOR DRAIN. USE TRAP PRIMER TAILPIECE IN-LIEU OF STANDARD LAVATORY TAILPIECE WHERE SPECIFIED. ASSE 1044.	SIOUX CHIEF 213-092	–	–	–	–	–
EWH1	ELECTRIC WATER HEATER 6,000 WATTS, 208 VOLT, SINGLE PHASE, 30 GALLON ELECTRIC WATER HEATER.	RHEEM EGSP30	–	–	–	3/4"	3/4"
HWP	HOT WATER RECIRCULATOR PUMP WITH INTEGRAL TIMER & AQUASTAT. THREE SPEED, WET ROTOR, DIRECT DRIVE, CENTRIFUGAL PUMP. UL LISTED AND CSA APPROVED. 120V, 85 WATTS, 1/25 HP, CORD. ALL BRONZE CONSTRUCTION.	GRUNDFOS UP 15-18B7	– –	– –	– –	– –	– –
G	RESIDENTIAL GARBAGE DISPOSAL 1/2 HP, 120V, 1Ø WITH STAINLESS STEEL GRIND CHAMBER, CUTTING ELEMENTS AND TURNTABLE.	IN-SINK-ERATOR 333SS	–	–	–	–	–
AAV	VENT TERMINAL RELIEF LOCATE AIR ADMITTANCE VALVE JUST BELOW ROOF DECK. SIZE AS INDICATED ON DRAWINGS.	STUDOR	–	–	–	–	–
MV1	MIXING VALVE THERMOSTATIC CONTROLLED WITH REMOVABLE STRAINER, STAINLESS STEEL PISTON AND LIQUID FILL THERMAL MOTOR WITH BELLOWS MOUNTED OUT OF WATER. SET WATER TEMP. @105°F.	SYMMONS TEMPCONTROL 7-200	–	–	–	3/4"	3/4"

PLUMBING LEGEND

- VENT PIPING
- WASTE PIPING BELOW FLOOR OR GRADE (SAN)
- COLD WATER PIPING (CW)
- HOT WATER PIPING (HW)
- HOT WATER RETURN PIPING (HWR)
- PIPING UP
- PIPING DOWN
- HOT WATER BALANCING VALVE
- P# PLUMBING FIXTURE IDENTIFICATION. SEE PLUMBING FIXTURE SCHEDULE
- VTR VENT THROUGH ROOF
- ELEVATION
- AFF ABOVE FINISHED FLOOR
- BFF BELOW FINISHED FLOOR
- S SANITARY
- W WASTE
- V VENT

COORDINATE AND VERIFY EXACT LOCATIONS OF ALL PLUMBING FIXTURES WITH ARCHITECTURAL DRAWINGS

REFER TO RISER ON DRAWING P2.1 FOR DOMESTIC WATER AND WASTE AND VENT LINE SIZING

PLUMBING DRAWING INDEX

P0.1 PLUMBING GENERAL NOTES, LEGEND AND SCHEDULES
P1.1 PLUMBING PLAN
P2.1 PLUMBING ISOMETRICS
P3.1 PLUMBING DETAILS
P3.2 PLUMBING DETAILS

WILDERARCHITECTURE, INC.
1315 E. SEVENTH AVENUE
SUITE 106
TAMPA, FLORIDA 33605.3607
TELEPHONE 813.242.6677
FACSIMILE 813.242.6683
wilderarchitecture.com
AA26000655

AGI
Anston-Greenlees, Inc.
Mechanical & Electrical Consulting Engineers
1315 West Fletcher Avenue, Tampa, FL 33612 Tel(813)963-1919
Email: AGI@agi-engineers.com HTTP://www.agi-engineers.com
Florida Engineering Business Number 6093

NOT FOR CONSTRUCTION

HARRY W. PORTELLOS, P.E. 61597

TO THE BEST OF MY KNOWLEDGE, THESE DRAWINGS AND THE PROJECT MANUAL ARE COMPLETE AND COMPLY WITH THE 2017 FLORIDA BUILDING CODE

THIS ITEM HAS BEEN ELECTRONICALLY SIGNED AND SEALED ON THE DATE/TIME STAMP SHOWN USING A DIGITAL SIGNATURE. PRINTED COPIES OF THIS DOCUMENT ARE NOT CONSIDERED SIGNED AND SEALED AND THE SIGNATURE MUST BE VERIFIED ON ANY ELECTRONIC COPIES.

HILLSBOROUGH COUNTY BOARD OF COUNTY COMMISSIONERS
COUNTY CENTER
601 E KENNEDY BLVD
TAMPA, FL 33601

HILLSBOROUGH COUNTY
NORTHWEST AREA HEAD START

PROJECT #: 2010-00	
DISTRIBUTION	DATE
DESIGN DEVELOPMENT	06.11.2020
90% CONST DOCS	08.19.2020

PLUMBING

P0.1

Drawing File: I:\20xxx\20033.001\20033d01.dwg P01
Plotted by: brandon Aug 17, 2020 - 11:52am

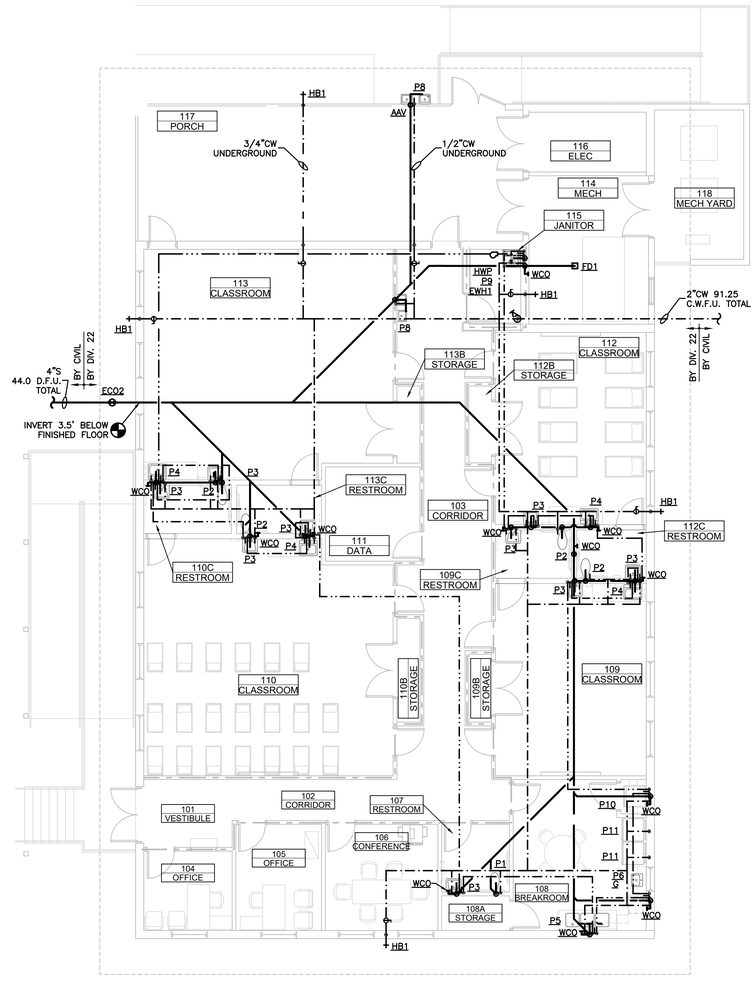

N

0 4' 8' 16'

PLUMBING PLAN
1/8" = 1'-0"

A1

1315 E. SEVENTH AVENUE
SUITE 106
TAMPA, FLORIDA 33605.3607

TELEPHONE 813.242.6677
FACSIMILE 813.242.6683

wilderarchitecture.com

AA26000655

WILDERARCHITECTURE, INC.

AGI
Anston-Greenlees, Inc.
Mechanical & Electrical Consulting Engineers
1315 West Fletcher Avenue, Tampa, FL 33612 Tel(813)963-1919
Email: AGI@agi-engineers.com HTTP://www.agi-engineers.com
Florida Engineering Business Number 6093

NOT FOR CONSTRUCTION

HARRY W. PORTELLOS, P.E. 61597

TO THE BEST OF MY KNOWLEDGE, THESE DRAWINGS AND THE PROJECT MANUAL ARE COMPLETE AND COMPLY WITH THE 2017 FLORIDA BUILDING CODE

THIS ITEM HAS BEEN ELECTRONICALLY SIGNED AND SEALED ON THE DATE/TIME STAMP SHOWN USING A DIGITAL SIGNATURE. PRINTED COPIES OF THIS DOCUMENT ARE NOT CONSIDERED SIGNED AND SEALED AND THE SIGNATURE MUST BE VERIFIED ON ANY ELECTRONIC COPIES.

HILLSBOROUGH COUNTY BOARD
OF COUNTY COMMISSIONERS
COUNTY CENTER
601 E KENNEDY BLVD
TAMPA, FL 33601

HILLSBOROUGH COUNTY
NORTHWEST AREA HEAD START

PROJECT #: 2010-00	
DISTRIBUTION	DATE
DESIGN DEVELOPMENT	06.11.2020
90% CONST DOCS	08.19.2020

PLUMBING PLAN

P1.1

Drawing File: I:\20xxx\20033.001\20033p11x.dwg P11
Plotted by: brendon Aug 17, 2020 - 11:52am

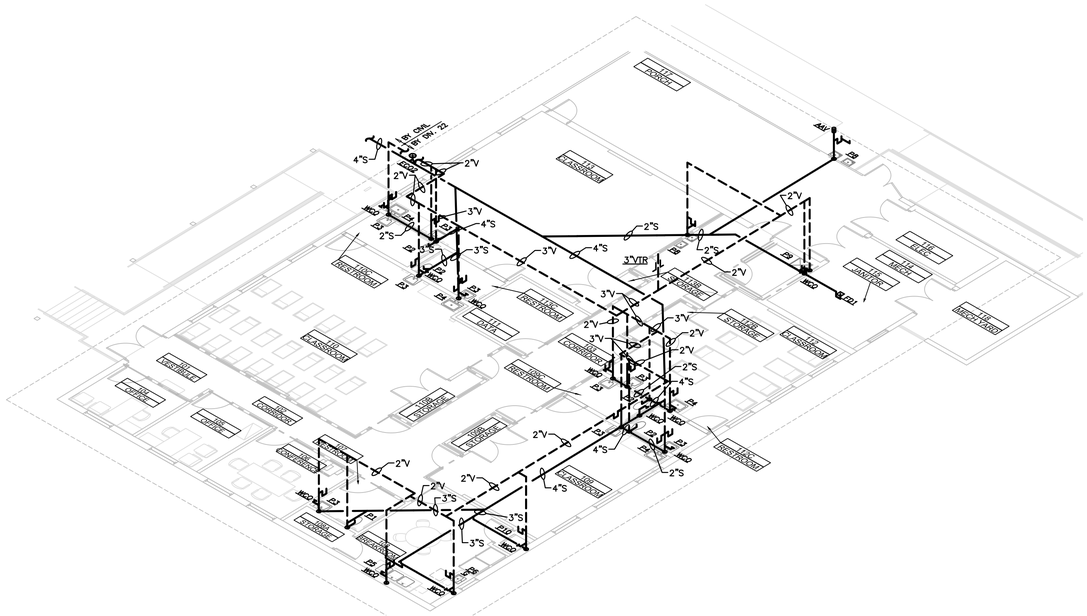
1ST FL. CONN. BY OWN. P2
4"S
2"V
2"S
3"V
3"VTR
1"V
1"S
2"CW
1"HW
1"CW
1-1/2"CW
1-1/4"CW
1/2"CW
1/2"HW
3/4"HW
3/4"HWR
SHUTOFF VALVE AT 18" A.F.F.
BY OWN. P21
BY OWN. P1
P1
P2
P21
P22
WCO
1ST FL. ROOF
1ST FL. ELEC.
1ST FL. MECH. ROOM
1ST FL. CORRIDOR
1ST FL. CONFERENCE
1ST FL. RECEPTION
1ST FL. VESTIBULE
1ST FL. VOICE/DATA
1ST FL. WOMEN
1ST FL. MEN
1ST FL. JANITOR
1ST FL. ENTRY
1ST FL. VESTIBULE
1ST FL. ENTRY
1ST FL. VESTIBULE
1ST FL. ENTRY
1ST FL. VESTIBULE

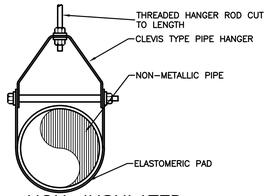

NON-INSULATED
PIPE HANGER SUPPORT
NOT TO SCALE

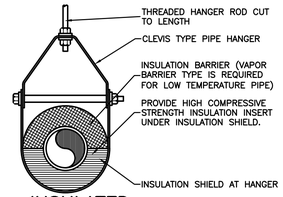

INSULATED
PIPE HANGER SUPPORT
NOT TO SCALE

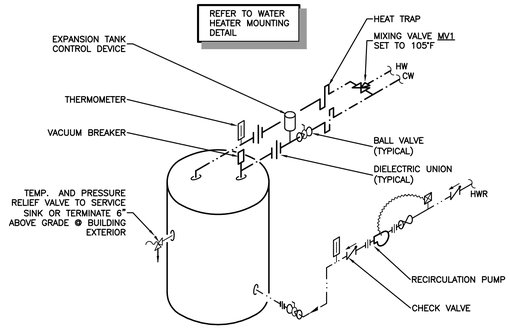

ELECTRIC WATER HEATER
PIPING DETAIL WITH
RECIRCULATION PUMP
NOT TO SCALE

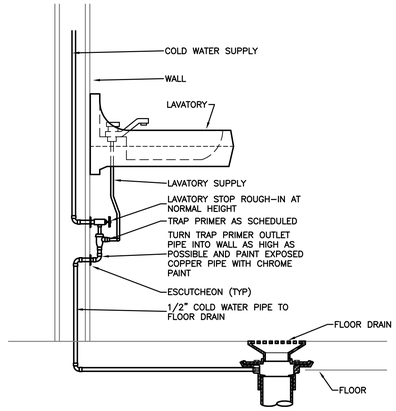

TRAP PRIMER DETAIL
NOT TO SCALE

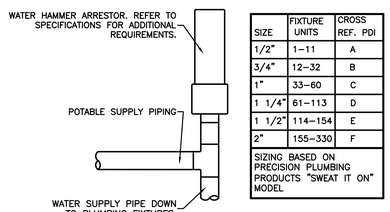

SIZE	FIXTURE UNITS	CROSS REF. PDI
1/2"	1-11	A
3/4"	12-32	B
1"	33-60	C
1 1/4"	61-113	D
1 1/2"	114-154	E
2"	155-330	F
SIZING BASED ON PRECISION PLUMBING PRODUCTS "SWEAT IT ON" MODEL		

WATER HAMMER ARRESTOR DETAIL
NOT TO SCALE

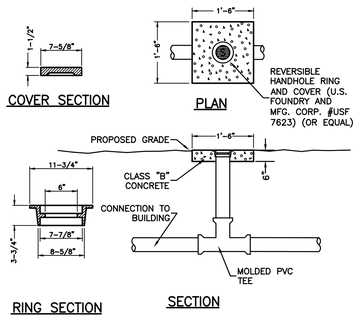

EXTERIOR CLEAN-OUT DETAIL (ECO2)
NOT TO SCALE

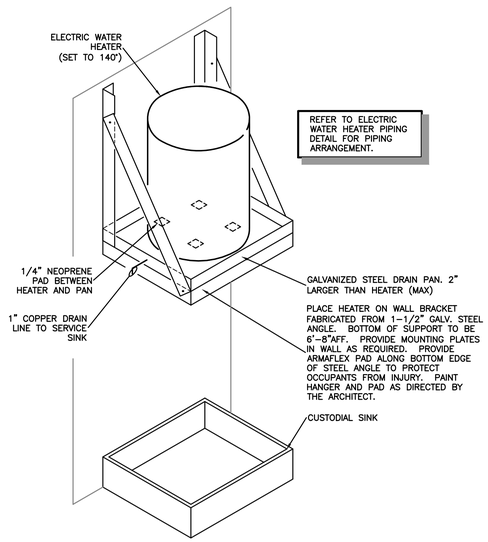

ELECTRIC WATER HEATER
WALL HUNG DETAIL
NOT TO SCALE

1315 E. SEVENTH AVENUE
SUITE 106
TAMPA, FLORIDA 33605.3607

TELEPHONE 813.242.6677
FACSIMILE 813.242.6683

wilderarchitecture.com

AA26000655

WILDERARCHITECTURE, INC.

AGI
Anston-Greenlees, Inc.
Mechanical & Electrical Consulting Engineers
1315 West Fletcher Avenue, Tampa, FL 33612 Tel(813)963-1919
Email: AGI@agi-engineers.com HTTP://www.agi-engineers.com
Florida Engineering Business Number 6093

NOT FOR CONSTRUCTION

HARRY W. PORTELLOS, P.E. 61597
TO THE BEST OF MY KNOWLEDGE, THESE DRAWINGS AND THE PROJECT MANUAL ARE COMPLETE AND COMPLY WITH THE 2017 FLORIDA BUILDING CODE

THIS ITEM HAS BEEN ELECTRONICALLY SIGNED AND SEALED ON THE DATE/TIME STAMP SHOWN USING A DIGITAL SIGNATURE. PRINTED COPIES OF THIS DOCUMENT ARE NOT CONSIDERED SIGNED AND SEALED AND THE SIGNATURE MUST BE VERIFIED ON ANY ELECTRONIC COPIES.

HILLSBOROUGH COUNTY BOARD
OF COUNTY COMMISSIONERS
COUNTY CENTER
601 E KENNEDY BLVD
TAMPA, FL 33601

HILLSBOROUGH COUNTY
NORTHWEST AREA HEAD START

PROJECT #: 2010-00	
DISTRIBUTION	DATE
DESIGN DEVELOPMENT	06.11.2020
90% CONST DOCS	08.19.2020

PLUMBING DETAILS

P3.1

Drawing File: I:\20xxx\20035.001\20035x3x.dwg P31
Plotted by: brandon Aug 17, 2020 - 11:53am

System No. W–L–2085

F Rating – 2 Hr
T Rating – 0 Hr

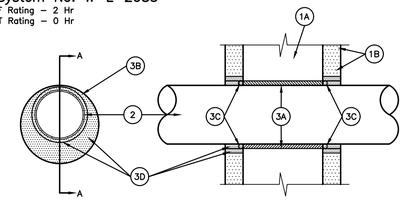

SECTION A–A

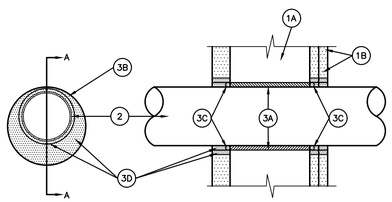

SECTION A–A

1. Wall Assembly – The fire–rated gypsum wallboard/stud wall assembly shall be constructed of the materials and in the manner specified in the individual U300 or U400 Series Wall and Partition Designs in the UL Fire Resistance Directory and shall include the following construction features:
   A. Studs – Wall framing may consist of either wood studs or steel channel studs. Wood studs to consist of nom 2 by 4 in. lumber spaced 16 in. OC. Steel studs to be min 2–1/2 in. wide and spaced max 24 in. OC.
   B. Wallboard, Gypsum* – Two layers of nom 5/8 in. thick gypsum wallboard as specified in the individual Wall and Partition Design. Max diam of opening is 6–7/8 in.

2. Through Penetrants – One nonmetallic pipe or conduit to be installed either concentrically or eccentrically within the firestop system. The annular space shall be min 3/4 in. to max 1–5/8 in. Pipe to be rigidly supported on both sides of wall assembly. The following types and sizes of nonmetallic pipes or conduits may be used.
   A. Polyvinyl Chloride (PVC) Pipe–Nom 4 in. diam (or smaller) Schedule 40 solid–core PVC pipe for use in closed (process or supply) or vented (drain,waste or vent) piping system.
   B. Chlorinated Polyvinyl Chloride (CPCV) Pipe– Nom 4 in. diam (or smaller) SDR17 CPVC pipe for use in closed (process or supply) or vented (drain, waste or vent) piping system.
   C. Acrylonitrile Butadene Styrene (ABS) Pipe– Nom 4 in. diam (or smaller) Schedule 40 solid core ABS pipe for use in closed (process or supply) or vented (drain, waste, or vent) piping systems.
   D. Electrical Nonmetallic Tubing (ENT)+– Nom 2 in. diam (or smaller) corrugated wall electrical nonmetallic tubing (ENT) constructed of polyvinyl chloride (PVC).
   See Electrical Nonmetallic Conduit (FKHU), category in the Electrical Construction Materials Directory for names of manufactures.
   E. Flexible Nonmetallic Conduit, Liquid–Tight (FNMC)+– Nom 2 in– diam (or smaller) corrugated wall electrical nonmetallic tubing, liquid–tight (FNMC) constructed of polyvinyl chloride (PVC).
   See Flexible Nonmetallic Conduit, Liquid–Tight (DXOQ) category in the Electrical Construction Materials Directory for names of manufactures.

3. Firestop System – The firestop system shall consist of the following.
   A. Fill, Void or Cavity Material*–Wrap Strip–Nom 1/4 in. thick by 3 or 4 in. wide intumescent wrap strip, encapsulated and hermetically sealed in a metallized polyester foil. The width of the wrap strip and the number of wrap strip layers used is dependent on the diameter of pipe, as shown in the following table. The layers of the wrap strip are tightly wrapped around the pipe. Wrap strip is to be recessed within the steel sleeve (Item 3B) a max of 1–1/2 in. from both ends of steel sleeve of the 3 in. wide wrap strip and a max of 1 in. from both ends of steel sleeve for the 4 in wide wrap strip.

Nom Pipe Diam In.	Pipe Type	Min No. of Wrap Strip Layers	Wrap Strip Width In.
1/2 to 2–1/2	PVC,CPVC	1	3
1/2 to 2	ABS, ENT, FNMC	1	3
2–1/2 to 3	ABS	2	4
3	PVC,CPVC	2	4
3–1/2 to 4	ABS,PVC,CPVC	3	4

   INSTANT FIRESTOP MFG INC – HIS240
   B. Metallic Sleeve – Cylindrical sleeve fabricated from 0.018 in. thick (No. 28 gauge) galv sheet steel and having a min 1 in. lap along the longitudinal seam. Sleeve is secured to outer circumference of wrap strip(s) with two min No. 18 AWG. steel tie wires located 1 to 2 in. from each end of sleeve. The wrap strip/steel sleeve is slid into the through opening flush with both sides of the wall. The annular space between the steel sleeve and the periphery of the opening shall be a min 0 in. (point contact) to max 7/8 in.
   C. Packing Material– Polyethylene backer rod friction–fitted into annular space between the penetrating item and the sleeve on one or both sides of the wall and recessed a 1/4 to 3/8 in. from each end of sleeve.
   D. Fill, Void or Cavity Material*–Sealant– Min 1–1/4 in. thickness of fill material applied within the annular space between the steel sleeve and the periphery of the opening, flush with both surfaces of wall. A 1/4 to 3/8 in. thickness of fill material applied within the annular space between the steel sleeve and the pipe, flush with both surfaces of wall.
   INSTANT FIRESTOP MFG INC – 344–GG

*Bearing the UL Classification Marking

System No. C–AJ–1284

F Rating – 3 Hr
T Rating – 1/4 Hr & 1/2 Hr (See Item 2)

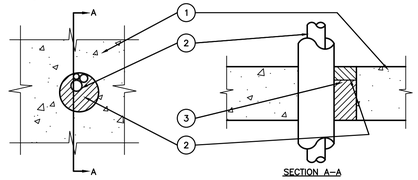

SECTION A–A

1. Floor or Wall Assembly – Min 4–1/2 in. thick lightweight or normal weight (100–150 pcf) concrete. Wall may also be constructed of any UL Classified Concrete Blocks*. Max diam of opening is 6 in.See Concrete Blocks (CAZT) category in the Fire Resistance Directory for names of manufacturers.

2. Through Penetrants – Aggregate cross–sectional area of penetrants in opening to be max 52 percent of the cross–sectional area of the opening in the floor or wall. Pipe, conduit, or tubing to be installed either concentrically or eccentrically within the firestop system. The space between penetrants shall be min 0 in. (point contact) to max 1–5/8 in. The annular space between penetrants and periphery of opening shall be min 0 in. (point contact) to max 1–5/8 in. Penetrants to be rigidly supported on both sides of floor or wall assembly. The following types and sizes of metallic pipes, conduits or tubing may be used:
   A. Steel Pipe – Nom 3 in. diam (or smaller) Schedule 40 (or heavier) steel pipe.
   B. Iron Pipe – Nom 3 in. diam (or smaller) cast or ductile iron pipe.
   C. Conduit – Nom 3 in. diam (or smaller) rigid steel conduit or steel electrical metallic tubing.
   D. Copper Tubing – Nom 2 in. diam (or smaller) Type L (or heavier) copper tube.
   E. Copper Pipe – Nom 2 in. diam (or smaller) Regular (or heavier) copper pipe.
   T rating is 1/2 hour for pipes/conduit A, B and C. T rating is 1/4 hour for tubing/pipes D and E.

3. Firestop System – The firestop system shall consist of the following:
   A. Packing Material – Min 4 in. or 4–1/4 in. thickness of min 4 pcf density mineral wool batt insulation for sealants B1 and B2, respectively, firmly packed into opening as a permanent form. Packing material to be recessed from top surface of floor or from both surfaces of wall as required to accommodate the required thickness of fill material (Item 3B).
   B1. Fill Void or Cavity Material* – Sealant – Min 1/2 in. thickness of fill material applied within annulus, flush with top surface of floor or both surfaces of wall. At the point contact locations between penetrant and periphery of opening, a min 1/2 in. diam bead of fill material shall be applied at the penetrant/concrete interface on the top surface of floor or on both surfaces of wall. Sealant to be forced into interstices of penetrants to max extent possible.
   Johns Manville International, Inc. – Firetemp™ CI
   B2. Fill Void or Cavity Material* – Sealant – Min 1/4 in. thickness of fill material applied within annulus, flush with top surface of floor or min 1/8 in. thickness of fill material applied within annulus, flush with both surfaces of wall. At point contact location between penetrant and periphery of opening a min 1/4 in. diam bead of fill material shall be applied at the concrete/penetrant interface on top surface of floor or both surfaces of wall assembly.
   Johns Manville International, Inc. – Firetemp™ SI, SE

*Bearing the UL Classification Marking

System No. F–A–2040

F Rating – 2 Hr
T Rating – 2 Hr

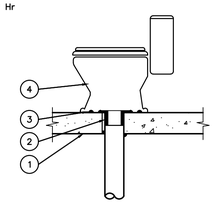

1. Floor Assembly – Min 4–1/2 in. thick lightweight or normal weight concrete (100–150 pcf). Max diam of opening is 6 in.

2. Nonmetallic Pipe – One nonmetallic drain pipe with max 4 in. diam toilet flange installed either concentrically or eccentrically within the firestop system. The annular space between drain pipe and periphery of opening shall be min 0 in. (point contact) to max 1–1/2 in. Pipe to be rigidly supported on lower side of floor assembly. The following types and sizes of nonmetallic pipes, fittings and flanges may be used:
   A. Polyvinyl Chloride (PVC) Pipe – Nom 4 in. diam (or smaller) Schedule 40 solid core or cellular core PVC pipe for use in vented (drain, waste or vent) piping system.
   B. Acrylonitrile Butadiene Styrene (ABS) Pipe – Nom 4 in. diam (or smaller) Schedule 40 cellular core or solid core ABS pipe for use in vented (drain, waste or vent) piping systems.

3. Fill, Void or Cavity Material* – Sealant – Min 1 in. thickness of fill material applied within the annulus, flush with bottom surface of floor. At point contact location between concrete and pipe, a min 1/2 in diam bead of fill material shall be applied at the pipe/concrete interface on bottom surface of floor assembly. A min 1/2 in. diam bead of fill material shall be applied around top edge of toilet flange. Prior to placement of water closet, a min 1/2 in. diam bead of fill material shall be applied to the bottom surface of the outer rim of the water closet.

Johns Manville International, Inc. – Firetemp™ CI

4. Water Closet – Floor mounted vitreous china water closet.

*Bearing the UL Classification Marking

THE DETAILS PRESENTED HERE REPRESENT THE INSTALLATION REQUIREMENTS FOR THE BASIS OF DESIGN PRODUCT'S U.L. LISTING. ALL FIRE STOPPING SHALL BE INSTALLED IN CONFORMANCE WITH THE MANUFACTURER'S DETAILS OF THE PRODUCTS USED SPECIFICALLY ON THIS PROJECT. APPLICABLE MANUFACTURER'S DETAILS OF THE U.L. LISTED PRODUCT SHALL BE SUBMITTED FOR THE ENGINEER'S REVIEW AND A COPY SHALL BE AVAILABLE ON SITE FOR USE BY THE AUTHORITY HAVING JURISDICTION.

System No. F–A–2039

F Rating – 1 Hr
T Rating – 1 Hr

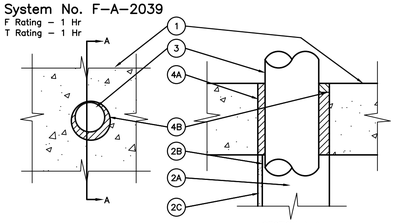

SECTION A–A

1. Floor Assembly – Min 4–1/2 in. thick lightweight or normal weight (100–150 pcf) concrete. Max diam of opening is 6 in.

2. Chase Wall – The nonmetallic penetrants (Item 3) are routed through a 1 hr fire–rated single, double or staggered steel stud/gypsum wallboard chase wall constructed of the materials and in the manner specified in the individual U400 Series Wall and Partition Designs in the UL Fire Resistance Directory and shall include the following construction features:
   A. Studs – Nom 2 by 6 in. or double 2 by 4 in. steel studs.
   B. Floor and Ceiling Runners – Nom 2 by 6 in. or parallel 2 by 4 in. steel floor/ceiling runners, tightly butted. Runners may be non–continuous over opening, terminating at both sides of periphery of opening. Max diam of opening is 6 in.
   C. Wallboard, Gypsum* – One layer of nom 5/8 in. thick gypsum wallboard, as specified in the individual Wall and Partition Design.

3. Nonmetallic Penetrants – One nonmetallic pipe or conduit to be installed either concentrically or eccentrically within the firestop system. The annular space between pipe or conduit and periphery of opening shall be min 3/8 in. to max 1–1/8 in. Pipe or conduit to be rigidly supported on both sides of floor assembly. The following types and sizes of nonmetallic pipes or conduits may be used:
   A. Polyvinyl Chloride (PVC) Pipe – Nom 4 in. diam (or smaller) Schedule 40 solid core PVC pipe for use in closed (process or supply) or vented (drain, waste or vent) piping system.
   B. Chlorinated Polyvinyl Chloride (CPVC) Pipe – Nom 4 in. diam (or smaller) SDR17 CPVC pipe for use in closed (process or supply) or vented (drain, waste or vent) piping systems.
   C. Rigid Nonmetallic Conduit+ – Nom 4 in. diam (or smaller) Schedule 40 PVC conduit installed in accordance with Article 347 of the National Electrical Code (NFPA No. 70).

4. Firestop System – The firestop system shall consist of the following:
   A. Packing Material – Min 4 in. thickness of min 4 pcf mineral wool batt insulation firmly packed into opening as a permanent form. Packing material to be recessed from top surface of floor as required to accommodate the required thickness of fill material.
   B. Fill, Void or Cavity Material* – Sealant – Min 1/2 in. thickness of fill material applied within the annulus, flush with top surface of floor.

Johns Manville International, Inc. – Firetemp™ CI

+ Bearing the UL Listing Mark
*Bearing the UL Classification Marking

System No. C–AJ–1281

F Rating – 3 Hr
T Rating – 1/4 Hr

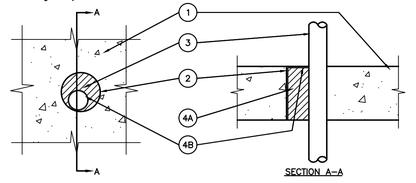

SECTION A–A

1. Floor or Wall Assembly – Min 4–1/2 in. thick lightweight or normal weight concrete (100–150 pcf). Wall may also be constructed of any UL Classified Concrete Blocks*. Max diam of opening is 8 in.
See Concrete Blocks (CAZT) category in the Fire Resistance Directory for names of manufacturers.

2. Metallic Sleeve – (Optional) – Sleeve to be cast or grouted into floor or wall assembly, flush with or max 2 in. above top surface of floor or both surfaces of wall assembly. The following metallic sleeves may be used within the firestop system:
   A. Nom 8 in. diam (or smaller) Schedule 40 (or heavier) steel sleeve.
   B. Nom 4 in. diam (or smaller) steel electrical metallic tubing (EMT) sleeve.

3. Through Penetrants – One metallic pipe, conduit or tubing to be installed either concentrically or eccentrically within the firestop system. The annular space between pipe, conduit or tubing and sleeve or periphery of opening shall be min 0 in. (point contact) to max 3–1/2 in. Pipe, conduit or tubing to be rigidly supported on both sides of floor or wall assembly. The following types and sizes of metallic pipes, conduits or tubing may be used:
   A. Steel Pipe – Nom 4 in. diam (or smaller) Schedule 40 (or heavier) steel pipe.
   B. Iron Pipe – Nom 4 in. diam (or smaller) cast or ductile iron pipe.
   C. Conduit – Nom 4 in. diam (or smaller) steel electrical metallic tubing or rigid steel conduit.
   D. Copper Tubing – Nom 3 in. diam (or smaller) Type L (or heavier) copper tube.
   E. Copper Pipe – Nom 3 in. diam (or smaller) Regular (or heavier) copper pipe.

4. Firestop System – The firestop system shall consist of the following:
   A. Packing Material – Min 4 in. or 4–1/4 in. thickness of min 4 pcf density mineral wool batt insulation for sealants B1 and B2, respectively, firmly packed into opening as a permanent form. Packing material to be recessed from top surface of floor or from both surfaces of wall as required to accommodate the required thickness of fill material (Item 4B).
   B1. Fill Void or Cavity Material* – Sealant – Min 1/2 in. thickness of fill material applied within annulus, flush with top surface of floor or both surfaces of wall. At point contact location between penetrant and sleeve or concrete, a 1/2 in.
   diam bead of fill material shall be applied at the sleeve or concrete/penetrant interface on the top surface of floor or both surfaces of wall.
   Johns Manville International, Inc. – Firetemp™ CI
   B2. Fill Void or Cavity Material* – Sealant – Min 1/4 in. thickness of fill material applied within annulus, flush with top surface of floor or min 1/8 in. thickness of fill material applied within annulus, flush with both surfaces of wall. At
   point contact location between penetrant and sleeve or concrete, a min 1/4 in. diam bead of fill material shall be applied at the sleeve or concrete/penetrant interface on the top surface of floor or both surfaces of wall.
   Johns Manville International, Inc. – Firetemp™ SI, SE

*Bearing the UL Classification Marking

System No. W–L–1154

F Rating – 1, 2, 3 & 4 Hr (See Item 1)
T Rating – 0 & 1/4 Hr (See Item 2)

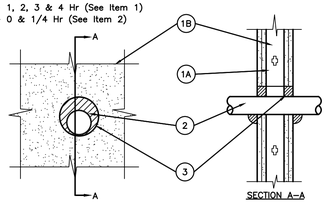

SECTION A–A

1. Wall Assembly – The 1, 2, 3 or 4 hr fire–rated gypsum wallboard/stud wall assembly shall be constructed of the materials and in the manner specified in the individual U300 or U400 Series Wall and Partition Designs in the UL Fire Resistance Directory and shall include the following construction features:
   A. Studs – Wall framing may consist of either wood studs or steel channel studs. Wood studs to consist of nom 2 by 4 in. lumber spaced 16 in. OC. Steel studs to be min 3–5/8 in. wide and spaced max 24 in. OC.
   B. Wallboard, Gypsum* – Thickness, type, number of layers and fasteners as specified in the individual Wall and Partition Design. Max diam of opening is 25–3/8 in. The hourly F Rating of the firestop system is equal to the hourly fire rating of the wall assembly in which it is installed.

2. Through Penetrants – One metallic pipe, conduit or tubing installed either concentrically or eccentrically within the firestop system. The annular space between pipe, conduit or tubing and periphery of opening shall be min 0 (point contact) in. to max 1–3/8 in. Pipe, conduit or tubing to be rigidly supported on both sides of wall assembly. The following types and sizes of metallic pipes, conduits or tubing may be used:
   A. Steel Pipe – The following types and sizes of steel pipes may be used:
      1A. Nom 4 in. diam (or smaller) Schedule 7 (or heavier) steel pipe.
      2A. Nom 8 in. diam (or smaller) Schedule 10 (or heavier) steel pipe.
      3A. Nom 10 in. diam (or smaller) Schedule 20 (or heavier) steel pipe.
      4A. Nom 24 in. diam (or smaller) Schedule 40 (or heavier) steel pipe.
   B. Iron Pipe – Nom 24 in– diam (or smaller) cast or ductile iron pipe. When iron pipe is used T Rating is 1/4 hr.
   When steel or iron pipe is used T Rating is 1/4 hr for nom 4 in, diam (or smaller) and 0 hr for steel or iron pipes greater than nom 4 in, diam.
   C. Conduit – Nom 4 in. diam (or smaller) steel electrical metallic tubing (EMT). When EMT is used T Rating is 1/4 hr.
   D. Conduit – Nom 6 in. diam (or smaller) steel conduit. When steel conduit is used T Rating is 1/4 hr.
   E. Copper Tubing – Nom 6 in. diam (or smaller) Type L (or heavier) copper tubing. When copper tube is used T Rating is 0 hr.
   F. Copper Pipe – Nom 6 in. diam (or smaller) Regular (or heavier) copper pipe. When copper pipe is used T Rating is 0 hr.

3. Fill, Void or Cavity Material* – Sealant – Min 5/8 in. thickness of fill material for 1 hr rated wall assemblies and 1 in. thickness of fill material for 2, 3 or 4 hr rated wall assemblies, applied within the annulus, flush with both surfaces of wall. At point contact location between penetrant and periphery of opening, a min 1/2 in. diam bead of fill material shall be installed at the wallboard/penetrant interface on both surfaces of wall.

Johns Manville International, Inc. – Firetemp™ CI

*Bearing the UL Classification Marking

System No. W–L–2179

F Rating – 1 Hr
T Rating – 1 Hr

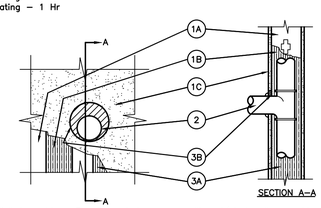

SECTION A–A

1. Wall Assembly – The fire–rated gypsum wallboard/stud wall assembly shall be constructed of the materials and in the manner specified in the individual U300 or U400 Series Wall and Partition Designs in the UL Fire Resistance Directory and shall include the following construction features:
   A. Studs – Wall framing may consist of either wood studs or steel channel studs. Wood studs to consist of nom 2 by 4 in. lumber spaced max 16 in. OC. Steel studs to be min 3–5/8 in. wide and spaced max 24 in. OC.
   B. Insulation, Glass Fiber – R–13 fiber glass insulation installed entirely within single stud cavity of nonmetallic pipe.
   C. Wallboard, Gypsum* – One layer of nom 5/8 in. thick gypsum wallboard, as specified in the individual Wall and Partition Design. Max diam of opening is 4–1/4 in.

2. Non–Metallic Pipe – Non–metallic pipe, installed within stud cavity and connected to non–metallic tee. Non–metallic pipe penetrating wall assembly on one side of wall to be installed either concentrically or eccentrically within the firestop system. The annular space between pipe and periphery of opening shall be min 0 in. (point contact) to max 3/8 in. Pipe to be rigidly supported on penetrating side of wall assembly. The following types of and sizes of non–metallic pipes and tees may be used:
   A. Polyvinyl Chloride (PVC) Pipe – Nom 2 in. diam (or smaller) Schedule 40 cellular core or solid core PVC pipe for use in vented (drain, waste, or vent) or closed (process and supply) piping system.
   B. Chlorinated Polyvinyl Chloride (CPVC) Pipe – Nom 2 in. diam (or smaller) SDR17 CPVC pipe for use in vented (drain, waste, or vent) or closed (process and supply) piping systems.
   C. Acrylonitrile Butadiene Styrene (ABS) Pipe – Nom 2 in. diam (or smaller) Schedule 40 cellular core or solid core ABS pipe for use in vented (drain, waste or vent) piping systems.
   D. Polyvinyl Chloride (PVC) Tee – Nom 2 in. diam (or smaller) Schedule 40 cellular core or solid core PVC tee.
   E. Chlorinated Polyvinyl Chloride (CPVC) Tee – Nom 2 in. diam (or smaller) SDR11 CPVC tee.
   F. Acrylonitrile Butadiene Styrene (ABS) Tee – Nom 2 in. diam (or smaller) Schedule 40 cellular core or solid core ABS tee.

3. Fill, Void or Cavity Material* – Sealant – Min 5/8 in. thickness of fill material applied within the annulus, flush with surface of wall. At point contact location between wallboard and pipe, a min 1/2 in diam bead of fill material shall be applied at the pipe/wallboard interface.

Johns Manville International, Inc. – Firetemp™ CI

*Bearing the UL Classification Marking

System No. W–L–2169

F Rating – 1, 2, 3 & 4 Hr (See Item 1B)
T Rating – 1, 2, 3 & 4 Hr

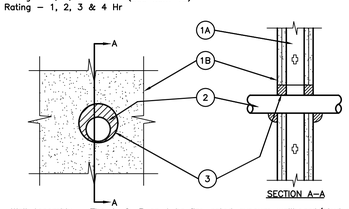

SECTION A–A

1. Wall Assembly – The 1, 2, 3 or 4 hr fire–rated gypsum wallboard/stud wall assembly shall be constructed of the materials and in the manner specified in the individual U300 or U400 Series Wall and Partition Designs in the UL Fire Resistance Directory and shall include the following construction features:
   A. Studs – Wall framing may consist of either wood studs or steel channel studs. Wood studs to consist of nom 2 by 4 in. lumber spaced max 16 in. OC. Steel studs to be min 3–5/8 in. wide and spaced max 24 in. OC.
   B. Wallboard, Gypsum* – Thickness, type, number of layers and fasteners as specified in the individual Wall and Partition Design. Max diam of opening is 3–3/8 in.

2. Through Penetrants – One nonmetallic pipe or tubing installed either concentrically or eccentrically within the firestop system. Pipe or tubing to be rigidly supported on both sides of wall assembly. The annular space between penetrant and periphery of opening shall be min 0 in. (point contact) to max 1 in. The following types and sizes of nonmetallic pipes or tubing may be used:
   A. Chlorinated Polyvinyl Chloride (CPVC) Pipe – Nom 2 in. diam (or smaller) CPVC pipe for use in closed (process or supply) piping systems.
   B. Polyvinyl Chloride (PVC) Pipe – Nom 2 in. diam (or smaller) Schedule 40 solid core or cellular core PVC pipe for use in closed (process or supply) piping system.
   C. Crosslinked Polyethylene (PEX) Tubing – Nom 1–1/2 in. diam (or smaller) SDR 9 PEX tubing for use in closed (process or supply) piping systems.
   D. Rigid Nonmetallic Conduit+ – Nom 2 in. diam (or smaller) Schedule 40 PVC conduit installed in accordance with Article 347 of the National Electrical Code (NFPA No. 70).

3. Fill, Void or Cavity Material* – Sealant – Min 5/8 in. thickness of fill material for 1 hr rated wall assemblies and min 1 in. thickness of fill material for 2, 3 or 4 hr rated wall assemblies, applied within the annulus, flush with both surfaces of wall. At point contact location between penetrant and periphery of opening, a min 1/2 in. diam bead of fill material shall be applied at the wallboard/penetrant interface on both sides of wall assembly.

Johns Manville International, Inc. – Firetemp™ CI

*Bearing the UL Classification Marking

System No. W–J–2049

F Rating – 1, 2, 3 & 4 Hr (See Item 1)
T Rating – 1, 2, 3 & 4 Hr

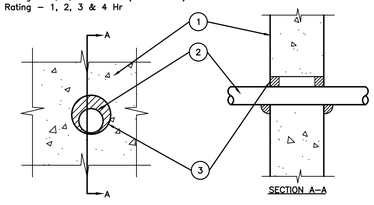

SECTION A–A

1. Wall Assembly – Min 4–7/8, 6–1/8, 7–3/8 or 8–5/8 in. thick lightweight or normal weight (100– 150 pcf) concrete for 1, 2, 3 or 4 hour rated wall assemblies, respectively. Wall may also be constructed of any UL Classified Concrete Blocks. Max diam of opening is 3–3/8 in.
See Concrete Blocks (CAZT) category in the Fire Resistance Directory for names of manufacturers.

2. Through Penetrants – One nonmetallic pipe or tubing installed either concentrically or eccentrically within the firestop system. The annular space between pipe and periphery of opening shall be min 0 in. to max 1 in. Pipe or tubing to be rigidly supported on both sides of wall assembly. The following types and sizes of nonmetallic pipes or tubing may be used:
   A. Chlorinated Polyvinyl Chloride (CPVC) Pipe – Nom 2 in. diam (or smaller) SDR 11 CPVC pipe for use in closed (process or supply) piping systems.
   B. Polyvinyl Chloride (PVC) Pipe – Nom 2 in. diam (or smaller) Schedule 40 (or heavier) cellular or solid core PVC pipe for use in closed (process or supply) piping systems.
   C. Crosslinked Polyethylene (PEX) Tubing – Nom 1–1/2 in. diam (or smaller) SDR 9 PEX tubing for use in closed (process or supply) piping systems.
   D. Rigid Nonmetallic Conduit+ – Nom 2 in. diam (or smaller) Schedule 40 PVC conduit installed in accordance with Article 347 of the National Electrical Code (NFPA No. 70)

3. Fill, Void or Cavity Material* – Sealant – Min 5/8 in. thickness for 1 hr rated wall assemblies and 1 in. thickness of fill material for 2, 3 or 4 hr rated wall assemblies, respectively, applied within the annulus, flush with both surfaces of wall. At point contact location between penetrant and periphery of opening, a min 1/2 in. diam bead of fill material shall be applied at the concrete/penetrant interface on both surfaces of wall.

Johns Manville International, Inc. – Firetemp™ CI

*Bearing the UL Classification Marking

1315 E. SEVENTH AVENUE
SUITE 106
TAMPA, FLORIDA 33605.3607

TELEPHONE 813.242.6677
FACSIMILE 813.242.6683

wilderarchitecture.com

AA26000655

WILDERARCHITECTURE, INC.

AGI
Anston-Greenlees, Inc.
Mechanical & Electrical Consulting Engineers
1315 West Fletcher Avenue, Tampa, FL 33612 Tel(813)963-1919
Email: AGI@agi-engineers.com HTTP://www.agi-engineers.com
Florida Engineering Business Number 6093

NOT FOR CONSTRUCTION

HARRY W. PORTELLOS, P.E. 61597
TO THE BEST OF MY KNOWLEDGE, THESE DRAWINGS AND THE PROJECT MANUAL ARE COMPLETE AND COMPLY WITH THE 2017 FLORIDA BUILDING CODE

THIS ITEM HAS BEEN ELECTRONICALLY SIGNED AND SEALED ON THE DATE/TIME STAMP SHOWN USING A DIGITAL SIGNATURE. PRINTED COPIES OF THIS DOCUMENT ARE NOT CONSIDERED SIGNED AND SEALED AND THE SIGNATURE MUST BE VERIFIED ON ANY ELECTRONIC COPIES.

HILLSBOROUGH COUNTY BOARD
OF COUNTY COMMISSIONERS
COUNTY CENTER
601 E KENNEDY BLVD
TAMPA, FL 33601

HILLSBOROUGH COUNTY
NORTHWEST AREA HEAD START

PROJECT #: 2010-00

DISTRIBUTION	DATE
DESIGN DEVELOPMENT	06.11.2020
90% CONST DOCS	08.19.2020

PLUMBING DETAILS

P3.2

Drawing File: I:\2Dwx\20033.001\20033p3x.dwg, P32
Plotted by: brandon Aug 17, 2020 - 11:53am

LUMINAIRE SCHEDULE

TYPE	DESCRIPTION	VOLTS	WATTS	LAMPS	BALLAST (IF APPLICABLE)	MOUNTING
A	2'x2' RECESSED LED LUMINAIRE. LOW PROFILE WITH CENTER BASKET CURVED SMOOTH ACRYLIC LENS, 0–10V DIMMING (DOWN TO 1%) AND VOLUMETRIC DISTRIBUTION. LITHONIA #2BLT2–33L–ADSM–EZ1–LP840, OR APPROVED EQUIVALENT	120	26	LED, 3300 LUMENS, 4000K	LED DRIVER, 0–10V DIMMING	RECESSED GRID
A1	SAME AS TYPE 'A' EXCEPT WITH EMERGENCY BATTERY PACK. LITHONIA #2BLT2–33L–ADSM–EZ1–LP840–EL14, OR APPROVED EQUIVALENT	120	26	LED, 3300 LUMENS, 4000K	LED DRIVER, 0–10V DIMMING	RECESSED GRID
B	2'x2' RECESSED LED LUMINAIRE. LOW PROFILE WITH CENTER BASKET CURVED SMOOTH ACRYLIC LENS, 0–10V DIMMING (DOWN TO 1%) AND VOLUMETRIC DISTRIBUTION. LITHONIA #2BLT2–40L–ADSM–EZ1–LP840, OR APPROVED EQUIVALENT	120	32	LED, 4000 LUMENS, 4000K	LED DRIVER, 0–10V DIMMING	RECESSED GRID
B1	SAME AS TYPE 'B' EXCEPT WITH EMERGENCY BATTERY PACK. LITHONIA #2BLT2–40L–ADSM–EZ1–LP840–EL14, OR APPROVED EQUIVALENT	120	32	LED, 4000 LUMENS, 4000K	LED DRIVER, 0–10V DIMMING	RECESSED GRID
C	2'x2' RECESSED LED LUMINAIRE. LOW PROFILE WITH CENTER BASKET CURVED SMOOTH ACRYLIC LENS, 0–10V DIMMING (DOWN TO 1%) AND VOLUMETRIC DISTRIBUTION. LITHONIA #2BLT2–48L–ADSM–EZ1–LP840, OR APPROVED EQUIVALENT	120	43	LED 4800 LUMENS, 4000K	LED DRIVER, 0–10V DIMMING	RECESSED GRID
C1	SAME AS TYPE 'C' EXCEPT WITH EMERGENCY BATTERY PACK. LITHONIA #2BLT2–48L–ADSM–EZ1–LP840–EL14, OR APPROVED EQUIVALENT	120	43	LED, 4800 LUMENS, 4000K	LED DRIVER, 0–10V DIMMING	RECESSED GRID
D	6" ROUND, OPEN LED DOWNLIGHT WITH SEMI–SPECULAR REFLECTOR, MEDIUM WIDE DISTRIBUTION, AND 0–10V DIMMING DRIVER. DAMP LOCATION LISTED. LITHONIA #LDN6–40–15–L06–AR–LSS–120–EZ10, OR APPROVED EQUIVALENT	120	18	LED, 1500 LUMEN, 4000K	LED DRIVER, 0–10V DIMMING	RECESSED FLANGE
D1	SAME AS TYPE 'D' EXCEPT WITH EMERGENCY BATTERY PACK. LITHONIA #LDN6–40–20–L06–AR–LSS–120–EZ10–EL, OR APPROVED EQUIVALENT	120	18	LED, 1500 LUMEN, 4000K	LED DRIVER, 0–10V DIMMING	RECESSED FLANGE
F	2'–0" LED VANITY LUMINAIRE. SURFACE MOUNT, 5" ROUNDED EXTRUDED ALUMINUM HOUSING WITH DIE CAST END CAPS AND HIGH IMPACT 0.156" THICK PRISMATIC INTERIOR, SMOOTH EXTERIOR POLYCARBONATE LENS. KENALL #LWLHA5V–2–SP–MW–PP–25L40K, OR APPROVED EQUIVALENT.	120	25	LED, 2500 LUMEN, 4000K	LED DRIVER, 0–10V DIMMING	WALL MOUNT ABOVE MIRROR. COORDINATE EXACT HEIGHT WITH ARCHITECT
G	4'–0" LENSED LED STRIP TYPE LUMINAIRE. COLD–ROLLED STEEL HOUSING WITH SNAP ON/OFF FROSTED DIFFUSE LENS. PROVIDE CHAIN HANGER AS REQ'D. LITHONIA #GLX–L48–5000LM–SEF–FDL–MVOLT–GZ10–40K–80CRI–WH, OR APPROVED EQUIVALENT.	120	36	LED 5000 LUMENS, 4000K	LED DRIVER	SURFACE MOUNT OR CHAIN HUNG AT 8'–6" AFF
G1	SAME AS TYPE 'G' EXCEPT WITH EMERGENCY BATTERY PACK. LITHONIA #GLX–L48–5000LM–SEF–FDL–MVOLT–GZ10–40K–80CRI–WH–PS1050, OR APPROVED EQUIVALENT.	120	36	LED 5000 LUMENS, 4000K	LED DRIVER	SURFACE MOUNT GWB CEILING
H	6" ROUND, OPEN LED DOWNLIGHT WITH SEMI–SPECULAR REFLECTOR, MEDIUM WIDE DISTRIBUTION, AND 0–10V DIMMING DRIVER. WET LOCATION LISTED. LITHONIA #LDN6–40–20–L06–AR–LSS–120–EZ10–WL, OR APPROVED EQUIVALENT	120	23	LED, 2000 LUMEN, 4000K	LED DRIVER, 0–10V DIMMING	RECESSED FLANGE
K	EXTERIOR WALL SCONCE, HALF ROUND DIE CAST ALUMINUM HOUSING, WITH TYPE IV DISTRIBUTION. SUITABLE FOR WET LOCATIONS WITH LENS FACING DOWN. COLOR SELECTION BY ARCHITECT. LITHONIA #WSR–LED–P2–40K–SR4–MVOLT–SF, OR APPROVED EQUIVALENT.	120	29	LED 3000 LUMENS, 4000K	LED DRIVER	WALL MOUNTED, 10'–0" AFG OR AS NOTED
SA	POLE MOUNTED OUTDOOR HEAVY–DUTY EXTRUDED ALUMINUM HOUSING, SINGLE HEAD, FULL CUTOFF WITH TYPE V WIDE DISTRIBUTION, WITH HOUSE SHIELD. COLOR SELECTION BY ARCHITECT. LITHONIA D–SERIES #DSX0–LED–P2–40K–T5W–MVOLT–HS–xx, OR APPROVED EQUIVALENT.	120	49	LED, 4000K	LED DRIVER	POLE MOUNT ON CONCRETE POLE 25'–0" TO BOTTOM. SEE DETAIL.
SB	POLE MOUNTED OUTDOOR HEAVY–DUTY EXTRUDED ALUMINUM HOUSING, SINGLE HEAD, FULL CUOTFF WITH BACK LIGHT CONTROL DISTRIBUTION. COLOR SELECTION BY ARCHITECT. LITHONIA D–SERIES #DSX0–LED–P3–40K–BLC–MVOLT–xx, OR APPROVED EQUIVALENT.	120	71	LED, 4000K	LED DRIVER	POLE MOUNT ON CONCRETE POLE 25'–0" TO BOTTOM. SEE DETAIL.
X	EXIT LIGHT, SINGLE OR TWIN FACED, UNIVERSAL ARROWS, UNIVERSAL MOUNTING, LED SOURCE, WHITE THERMOPLASTIC FACE WITH RED LETTERS, DUAL VOLTAGE, SELF DIAGNOSTIC WITH INTEGRAL BATTERY. LITHONIA #LQM–S–W–3–R–120/277–ELN, OR APPROVED EQUIVALENT	120	5	LED W/FIXT.	LED DRIVER	VARIES, SEE SPECS AND PLANS

NOTES:

1. ALL LUMINAIRES THAT ARE EQUIPPED WITH AN EMERGENCY BATTERY PACK SHALL HAVE TEST BUTTONS AND INDICATOR LIGHTS VISIBLE AND ACCESSIBLE FROM A FLOOR STANDING POSITION.
2. PROPOSED SUBSTITUTIONS SHALL BE SUBMITTED IN WRITING AND REVIEWED FOR PRIOR APPROVAL. ACCEPTABLE SUBSTITUTIONS SHALL BE ISSUED BY OFFICIAL ADDENDUM.

ELECTRICAL LEGEND

SYMBOL	DESCRIPTION	MOUNTING
	BRANCH CIRCUIT CONDUIT AND WIRE CONCEALED ABOVE CEILING OR BEHIND FINISHED WALL	N/A
	BRANCH CIRCUIT CONDUIT AND WIRE CONCEALED BELOW FINISHED FLOOR OR UNDERGROUND.	N/A
	RACEWAY EXPOSED ON WALL OR CEILING	N/A
LA–1,3,5 #EG #IG	HOMERUN TO PANELBOARD – LETTER INDICATES PANEL, NUMBER INDICATES CIRCUIT, MINIMUM 3/4" CONDUIT. NOTE: ANY HOMERUN WITHOUT FURTHER DESIGNATION INDICATES TWO #12 AWG AND #12 AWG EQUIPMENT GROUND. PC OUTLET REQUIRES SEPARATE NEUTRAL, MIN. #10 AWG. DEDICATED CIRCUIT REQUIRES SEPARATE NEUTRAL	N/A
UP DOWN	RACEWAY RISER, UP OR DOWN AS NOTED	N/A
	CONDUIT CAPPED	N/A
X X	EXIT LIGHT, LETTER INDICATES TYPE SINGLE OR DUAL FACED AS INDICATED ON DRAWINGS	SEE FIXTURE SCHEDULE
VS OS	LOW VOLTAGE VACANCY/OCCUPANCY SENSOR. CEILING MOUNTED, DUAL TECHNOLOGY. SUBMIT SENSOR MANUFACTURER'S LAYOUT DRAWINGS FOR APPROVAL. SENSOR SWITCH #CM–PDT–9 (10'–0" RADIAL COVERAGE), #CM–PDT–10 (20'–0" RADIAL COVERAGE), OR APPROVED EQUIVALENT. PROVIDE WIDER RANGE DEVICES WHEN NECESSARY. VS = VACANCY MODE (MANUAL ON/AUTO OFF) OS = OCCUPANCY MODE (AUTO ON/AUTO OFF)	CEILING
VS OS	LINE VOLTAGE VACANCY/OCCUPANCY SENSOR. CEILING MOUNTED, DUAL TECHNOLOGY. SUBMIT SENSOR MANUFACTURER'S LAYOUT DRAWINGS FOR APPROVAL. SENSOR SWITCH #CMR–PDT–9 (10'–0" RADIAL COVERAGE), #CMR–PDT–10 (20'–0" RADIAL COVERAGE), OR APPROVED EQUIVALENT. PROVIDE WIDER RANGE DEVICES WHEN NECESSARY. VS = VACANCY MODE (MANUAL ON/AUTO OFF) OS = OCCUPANCY MODE (AUTO ON/AUTO OFF)	CEILING
$M	MOTOR/HP RATED TOGGLE SWITCH SIZED PER MOTOR MANUFACTURER'S RECOMMENDATION, MINIMUM 20 AMP.	SURFACE, ADJACENT TO OR ON MOTOR
$a	LOW VOLTAGE LIGHTING CONTROL SWITCH WITH 0–10V DIMMING CONTROL. PUSH BUTTON, MANUAL ON/AUTO OFF (VACANCY MODE) OR AUTO ON/AUTO OFF (OCCUPANCY MODE). DIMMER SWITCH TO BE COMPATIBLE WITH LED DRIVE (0–10V DIMMING, ETC.). SENSOR SWITCH #SPODM–SA–D (MANUAL ON), #SENSOR SWITCH #SPODM–D (AUTO ON), OR APPROVED EQUIVALENT.	M.H. 48" AFF TO TOP
$3	LOW VOLTAGE LIGHTING CONTROL SWITCH WITH 0–10V DIMMING CONTROL FOR THREE WAY APPLICATIONS. PUSH BUTTON, MANUAL ON/AUTO OFF (VACANCY MODE) OR AUTO ON/AUTO OFF (OCCUPANCY MODE). DIMMER SWITCH TO BE COMPATIBLE WITH LED DRIVE (0–10V DIMMING, ETC.). SENSOR SWITCH #SPODM–SA–3X–D (MANUAL ON), #SPODM–3X–D (AUTO ON), OR APPROVED EQUIVALENT.	M.H. 48" AFF TO TOP
$	SINGLE POLE SWITCH, 120–277 VOLT	M.H. 48" AFF TO TOP
$3	THREE WAY SWITCH, 120–277 VOLT	M.H. 48" AFF TO TOP
$T	DIGITAL TIME DELAY SWITCH (LIGHTS & EXH. FAN) WITH PRE–SET 10, 15 & 30 MINUTE OFF DELAY.	M.H. 48" AFF TO TOP
$OS	LINE VOLTAGE PUSH BUTTON WALL SWITCH/OCCUPANCY SENSOR. AUTO ON/AUTO OFF. SENSOR SWITCH #WSD–PDT, OR APPROVED EQUIVALENT.	M.H. 48" AFF TO TOP
$a	LOW VOLTAGE LIGHTING CONTROL WALL SWITCH. PUSH BUTTON, MANUAL ON/AUTO OFF (VACANCY MODE) OR AUTO ON/AUTO OFF (OCCUPANCY MODE). LETTER INDICATES FIXTURE GROUPING BY SWITCH. SENSOR SWITCH #SPODM–SA (MANUAL ON), #SPODM (AUTO ON), OR APPROVED EQUIVALENT.	M.H. 48" AFF TO TOP
$3	LOW VOLTAGE THREE WAY LIGHTING CONTROL WALL SWITCH. PUSH BUTTON MANUAL ON/AUTO OFF (VACANCY MODE) OR AUTO ON/AUTO OFF (OCCUPANCY MODE). LETTER INDICATES FIXTURE GROUPING BY SWITCH. SENSOR SWITCH #SPODM–SA–3X (MANUAL ON), #SPODM–3X (AUTO ON), OR APPROVED EQUIVALENT.	M.H. 48" AFF TO TOP
$VS	LINE VOLTAGE WALL SWITCH VACANCY SENSOR. PUSH BUTTON MANUAL ON/AUTO OFF. LETTER INDICATES FIXTURE GROUPING BY SWITCH. SENSOR SWITCH #WSD–PDT–SA, OR APPROVED EQUIVALENT.	M.H. 48" AFF TO TOP
	SINGLE RECEPTACLE – 120VAC	M.H. 16" AFF TO BOTTOM
WP GFI	DUPLEX RECEPTACLE – 120VAC, "WP" DENOTES WEATHERPROOF "GFI" DENOTES GROUND FAULT PROTECTION.	M.H. 16" AFF TO BOTTOM
	DUPLEX RECEPTACLE – 120VAC	M.H. 42" AFF TO BOTTOM OR AS NOTED
	DOUBLE DUPLEX RECEPTACLE – 120VAC	M.H. 16" AFF TO BOTTOM
	DOUBLE DUPLEX RECEPTACLE – 120VAC	M.H. 42" AFF TO BOTTOM OR AS NOTED
	30 AMP, 208 VOLT, SINGLE PHASE RECEPTACLE NEMA 6–30R, OR AS INDICATED.	M.H. 42" AFF TO BOTTOM
	SPECIAL RECEPTACLE, AMPERAGE, NEMA TYPE AS INDICATED.	M.H. 42" AFF TO BOTTOM
	COMBINATION COMMUNICATION/POWER FLOOR BOX. ROUND FULLY ADJUSTABLE, COORDINATE DEPTH WITH SLAB THICKNESS, TWO–GANG WITH BRASS FLANGE.	FLUSH MOUNTED IN FLOOR

THIS IS A STANDARD LEGEND. NOT ALL DEVICES SHOWN ARE USED IN THESE DOCUMENTS.

ELECTRICAL LEGEND

SYMBOL	DESCRIPTION	MOUNTING
WA	COMMUNICATIONS OUTLET BOX, 4" SQUARE AND 1" CONDUIT (UON) WITH BUSHING STUBBED INTO CEILING SPACE. CABLING AND DATA JACKS BY OWNER. SEE SPECIFICATION FOR MORE REQUIREMENTS. PROVIDE BLANK COVERPLATE FOR UNUSED BOXES. "#" = PROPOSED NUMBER OF PORTS. "WA" DENOTES WIRELESS ACCESS POINT.	M.H. 16" AFF TO BOTTOM OR AS NOTED (VERIFY MOUNTING HEIGHTS WITH OWNER PRIOR TO ROUGH–IN AT ALL COUNTER LOCATIONS)
J	JUNCTION BOX OR OUTLET BOX, 4" SQUARE BOX UNLESS OTHERWISE NOTED	AS NOTED
JH	JUNCTION BOX OR OUTLET BOX, 4" SQUARE BOX UNLESS OTHERWISE NOTED	WALL MOUNTED
JHD	JUNCTION BOX OR OUTLET BOX, 4" SQUARE BOX, FOR HAND DRYER ELECTRICAL CONNECTION.	M.H. 44" AFF TO CENTER
TV	TV OUTLET BOX WITH TV JACK, 3/4" CONDUIT W/BUSHING STUBBED INTO CEILING SPACE.	M.H. 60" AFF TO BOTTOM OR AS NOTED
	120/208V. PANELBOARD	M.H. 6'–0" TO TOP OR AS NOTED
	NON–FUSIBLE SAFETY SWITCH	M.H. 6'–0" TO TOP OR AS NOTED
	FUSIBLE SAFETY SWITCH	M.H. 6'–0" TO TOP OR ON EQUIPMENT
	MOTOR CONNECTION	AS NOTED
	ELECTRIC HEAT STRIP	IN VAV BOX INDICATED
	MOMENTARY SWITCH WITH RED 2" MUSHROOM HEAD BUTTON, WITH COVER, OR AS NOTED	M.H. 48" A.F.F. TO TOP OR AS NOTED
F	FIRE ALARM MANUAL PULL STATION	M.H. 48" AFF TO TOP
FRI	FIRE ALARM REMOTE INDICATOR	TOP 6" BELOW CEILING OR 80" A.F.F. WHICHEVER IS LOWER
FFS	FIRE ALARM FLOW SWITCH	AS NOTED
FTS	FIRE ALARM TAMPER SWITCH	AS NOTED
FD	FIRE ALARM MAGNETIC DOOR HOLDER COORDINATE MOUNTING HEIGHT WITH DOOR SUPPLIER	WALL MOUNTED
FS	FIRE ALARM SMOKE DETECTOR	CEILING MOUNTED
FH	FIRE ALARM HEAT DETECTOR	CEILING MOUNTED
FR	FIRE ALARM RELAY TO SHUT DOWN AIR HANDLER UNITS	SEE PLANS
FRT	FIRE ALARM DUCT DETECTOR REMOTE TEST STATION	M.H. 64" AFF TO BOTTOM
FSD	FIRE ALARM SMOKE DETECTOR IN A/C DUCT	DUCT MOUNTED (SEE MECH. DWGS.)
XX F	FIRE ALARM STROBE XX = CANDELA RATING, MINIMUM 75 CANDELA U.O.N.	TOP 6" BELOW CEILING OR 80" TO BOTTOM OF LENS A.F.F. WHICHEVER IS LOWER
XX SF	FIRE ALARM COMBINATION SPEAKER/STROBE, LETTER IN CIRCLE INDICATES TYPE: C=CHIME, B=BELL, H=HORN, S=SPEAKER XX = CANDELA RATING, MINIMUM 75 CANDELA U.O.N.	TOP 6" BELOW CEILING OR 80" TO BOTTOM OF LENS A.F.F. WHICHEVER IS LOWER
SF	FIRE ALARM HORN/SPEAKER, LETTER IN CIRCLE INDICATES TYPE: B=BELL, C=CHIME, H=HORN, S=SPEAKER WP=WEATHERPROOF TYPE	TOP 6" BELOW CEILING OR 80" TO CTR. A.F.F. WHICHEVER IS LOWER EXTERIOR HORNS MOUNTED AT 96" AFF
Syy	FIRE ALARM SPEAKER. RECESSED IN THE CEILING OR SURFACE MOUNTED WHEN INDICATED WITH (SUR) XX = CANDELA RATING, MINIMUM 75 CANDELA U.O.N. YY = SPEAKER WATTAGE, MINIMUM 1/2 WATT U.O.N.	CEILING MOUNTED U.O.N. WITH (SUR)
S xx yy	FIRE ALARM SPEAKER WITH STROBE. RECESSED IN THE CEILING OR SURFACE MOUNTED WHEN INDICATED WITH (SUR) XX = CANDELA RATING, MINIMUM 75 CANDELA U.O.N. YY = SPEAKER WATTAGE, MINIMUM 1/2 WATT U.O.N.	CEILING MOUNTED U.O.N. WITH (SUR)
TF	FIRE ALARM TROUBLE BELL (SEE F.A. ONE LINE DIAGRAM)	AS NOTED
FATC	FIRE ALARM TERMINAL CABINET	M.H. 6'–6" AFF TO TOP
FAA	FIRE ALARM ANNUNCIATOR PANEL	M.H. 4'–6" AFF TO TOP
FAVP	FIRE ALARM MAIN CONTROL PANEL WITH VOICE ANNUNCIATOR AND CONTROL	M.H. 6'–6" AFF TO TOP
	END OF LINE RESISTOR	SEE PLANS
C CH	SECURITY CAMERA PROVIDE 4" SQUARE x 2–1/8" DEEP BOX AND 3/4" CONDUIT TO ACCESSIBLE CEILING SPACE. CABLING AND CAMERAS WILL BE PROVIDED AND INSTALLED BY OTHERS.	FLUSH IN WALL OR CEILING AT HEIGHT DETERMINED BY ARCHITECT/OWNER
A	ACCESS CONTROL CARD READER. PROVIDE 4" SQUARE x 2.5" DEEP BOX AND 3/4" CONDUIT TO ACCESSIBLE CEILING SPACE. CABLING AND READERS PROVIDED BY OWNER.	M.H. 48" AFF TO TOP

THIS IS A STANDARD LEGEND. NOT ALL DEVICES SHOWN ARE USED IN THESE DOCUMENTS.

ABBREVIATIONS:

AFF	ABOVE FINISHED FLOOR	INT	INTERCOM/PAGING CABINET
AFG	ABOVE FINISHED GRADE	MTG	MOUNTING
E	EXISTING	MTD	MOUNTED
ETR	EXISTING TO REMAIN	M.H.	MOUNTING HEIGHT
EWC	ELECTRIC WATER COOLER (PROVIDE GFI TYPE BREAKER)	N/A	NOT APPLICABLE
EWH	ELECTRIC WATER HEATER	OFCI	OWNER FURNISHED, CONTRACTOR INSTALLED
EG	EQUIPMENT GROUND	CFCI	CONTRACTOR FURNISHED, CONTRACTOR INSTALLED
EXP	EXPLOSION PROOF	OFOI	OWNER FURNISHED, OWNER INSTALLED
FACP	FIRE ALARM CONTROL PANEL	PROJ	PROJECTOR LOCATION
FATC	FIRE ALARM TERMINAL CABINET	UON	UNLESS OTHERWISE NOTED
GFI	GROUND FAULT PROTECTION	R	REMOVE
G, GND	GROUND	RL	RELOCATED
GWB	GYPSUM WALL BOARD	WP	WEATHER PROOF
HD	HAND DRYER		

ELECTRICAL GENERAL NOTES:

(THESE NOTES APPLY TO ALL SHEETS)

1. ALL ELECTRICAL WORK SHALL MEET ALL OF THE REQUIREMENTS OF THE FOLLOWING:
   A. FLORIDA BUILDING CODE (FBC) 6TH EDITION (2017): THIS CODE INCLUDES THE 2017 FBC BUILDING, MECHANICAL, PLUMBING, FUEL GAS AND ENERGY CONSERVATION VOLUMES. FURTHER, SEE "REFERENCED STANDARDS" IN THE FBC, BUILDING CHAPTER 35; FBC, PLUMBING CHAPTER 14; FBC, MECHANICAL CHAPTER 15; FBC, FUEL GAS CHAPTER 8, FBC, ENERGY CONSERVATION CHAPTER 5.) (EFFECTIVE DECEMBER 31, 2017)
   B. 6TH EDITION OF THE FLORIDA FIRE PREVENTION CODE (FFPC): (THIS CODE ALSO INCLUDES THE FLORIDA VERSIONS OF NFPA 1 AND NFPA 101.) (EFFECTIVE DECEMBER 31, 2017)
   C. 2014 NATIONAL ELECTRIC CODE
2. IT IS THE CONTRACTOR'S RESPONSIBILITY TO VISIT THE SITE AND VERIFY THE EXISTING CONDITIONS TO GAIN KNOWLEDGE OF THE SCOPE OF WORK INVOLVED.
3. "PROVIDE" SHALL MEAN "FURNISH AND INSTALL".
4. IN GENERAL, THESE DRAWINGS ARE SCHEMATIC IN NATURE AND SHOULD NOT BE SCALED. IT SHALL NOT BE THE INTENT OF THESE PLANS AND/OR SPECIFICATIONS TO SHOW EVERY MINOR DETAIL OF CONSTRUCTION. PROVIDE ALL ITEMS NECESSARY FOR A COMPLETE AND OPERATIONAL SYSTEM.
5. ELECTRICAL INSTALLATION SHALL BE CLOSELY COORDINATED WITH ALL OTHER TRADES. REVIEW THE ENTIRE SET OF DOCUMENTS FOR COORDINATION. NO COST SHALL BE ASSOCIATED WITH ILL–TIMED INSTALLATION INCLUDING ANY REPAIRS OR REPLACEMENTS.
6. ALL CONDUITS AND BOXES SHALL BE CONCEALED UNLESS OTHERWISE NOTED. ALL CONDUIT RUNS ARE SCHEMATIC IN NATURE. EXACT ROUTING TO BE DETERMINED IN THE FIELD UNLESS OTHERWISE NOTED.
7. APPLY A BITUMASTIC COATING FOR ALL CONDUITS PENETRATING FLOOR SLABS FROM BELOW GRADE.
8. PROVIDE ALL REQUIRED PULL BOXES, JUNCTION BOXES, ETC. FOR A COMPLETE INSTALLATION.
9. ALL CONDUCTORS SHALL BE STRANDED COPPER, THHN/THWN, MINIMUM #12 AWG. ALL CONDUCTORS SHALL BE IN CONDUIT. FLEXIBLE CONDUIT SHALL BE LIMITED TO A MAXIMUM OF 6'–0" IN LENGTH. SOLID CONDUCTORS ARE NOT ACCEPTABLE.
10. MC CABLE OR OTHER PREMANUFACTURED CABLING SHALL NOT BE USED UNLESS APPROVED BY THE OWNER AND ENGINEER.
11. ALL CIRCUITS SHALL CONTAIN A SEPARATE, GREEN, COPPER GROUNDING CONDUCTOR.
12. ALL RECEPTACLES SHALL HAVE A GROUND TERMINAL.
13. RECESSED LIGHTING FIXTURES SHALL BE SUPPORTED FROM THE STRUCTURE AT (4) POINTS. DO NOT SUPPORT FIXTURES FROM THE CEILING GRID, MECHANICAL PIPING, DUCTWORK, CONDUIT OR OTHER NON–STRUCTURAL BUILDING MEMBERS. PROVIDE SUPPLEMENTAL STEEL AS REQUIRED FOR INSTALLATION.
14. THE COLOR OF ALL RECEPTACLES, TOGGLE SWITCHES AND COVERPLATES SHALL BE VERIFIED WITH THE ARCHITECT PRIOR TO ORDERING.
15. PANELBOARDS SHALL BE ACCURATELY LABELED TO IDENTIFY FINAL CIRCUIT NUMBERS UTILIZED, THEIR LOAD AND LOCATION. PANELBOARD DIRECTORY CARDS SHALL BE TYPEWRITTEN, UPDATED AND ACCURATE.
16. PROVIDE FIRE RETARDANT U.L. APPROVED SEALANT ON ALL PENETRATIONS OF FIRE RATED PARTITIONS, WALLS AND STRUCTURAL SLABS. IT SHALL BE THE RESPONSIBILITY OF THE CONTRACTOR TO VERIFY, PRIOR TO SUBMITTING BID, LOCATIONS OF ALL SUCH FIRE RATED PARTITIONS, WALL AND STRUCTURAL SLABS. USE A U.L. APPROVED SYSTEM LISTED FOR THE ASSOCIATED INSTALLATION.
17. PROVIDE HANDLE TIES FOR 2 OR MORE SINGLE POLE WITH SHARED NEUTRALS TO COMPLY WITH NEC 210.4 (B).
19. SYSTEMS (FIRE ALARM, INTERCOM, TV, VOICE/DATA, SECURITY) WIRING SHALL NOT BE RUN UNDERGROUND. CABLING/SERVICES FROM ONE BUILDING TO ANOTHER MAY RUN UNDERGROUND. WIRING SHALL BE RATED SUCH USE.
20. ALL COMMUNICATION RACEWAY (DATA, VOICE, AV, SECURITY, ETC.) SHALL BE STUBBED INTO AN ACCESSIBLE CEILING SPACE. PROVIDE WITH PROTECTIVE BUSHINGS.
21. 120 VOLT CIRCUITS OVER 110 FEET SHALL BE #10 AWG MINIMUM, INCLUDING GROUND.
22. 277 VOLT CIRCUITS OVER 240 FEET SHALL BE #10 AWG. MINIMUM, INCLUDING GROUND.
23. SEE SPECIFICATIONS FOR MORE REQUIREMENTS.

ELECTRICAL DRAWING INDEX

E0.1 ELECTRICAL GENERAL NOTES, SYMBOL LEGEND AND LUMINAIRE SCHEDULE
E0.2 LUMINAIRE CUT SHEETS
E0.3 ELECTRICAL SITE PLAN
E1.1 LIGHTING PLAN
E2.1 POWER AND COMMUNICATIONS PLAN
E3.1 FIRE ALARM AND SYSTEMS PLANS
E4.1 PV SOLAR SYSTEM – ELECTRICAL ROOF PLAN
E5.1 ELECTRICAL SCHEDULES
E6.1 ELECTRICAL RISER DIAGRAM
E7.1 ELECTRICAL DETAILS
E7.2 ELECTRICAL DETAILS

1315 E. SEVENTH AVENUE
SUITE 106
TAMPA, FLORIDA 33605.3607

TELEPHONE 813.242.6677
FACSIMILE 813.242.6683

wilderarchitecture.com

AA26000655

WILDERARCHITECTURE, INC.

AGI
Anston-Greenlees, Inc.
Mechanical & Electrical Consulting Engineers
1315 West Fletcher Avenue, Tampa, FL 33612 Tel(813)963-1919
Email: AGI@agiengineers.com HTTP://www.agiengineers.com
Florida Engineering Business Number 6093

NOT FOR CONSTRUCTION

ROBERT C. ANSTON, P.E. 40855

TO THE BEST OF MY KNOWLEDGE, THESE DRAWINGS AND THE PROJECT MANUAL ARE COMPLETE AND COMPLY WITH THE 2017 FLORIDA BUILDING CODE

THIS ITEM HAS BEEN ELECTRONICALLY SIGNED AND SEALED ON THE DATE/TIME STAMP SHOWN USING A DIGITAL SIGNATURE. PRINTED COPIES OF THIS DOCUMENT ARE NOT CONSIDERED SIGNED AND SEALED AND THE SIGNATURE MUST BE VERIFIED ON ANY ELECTRONIC COPIES.

HILLSBOROUGH COUNTY BOARD
OF COUNTY COMMISSIONERS
COUNTY CENTER
601 E KENNEDY BLVD
TAMPA, FL 33601

HILLSBOROUGH COUNTY
NORTHWEST AREA HEAD START

PROJECT #: 2010-00	
DISTRIBUTION	DATE
DESIGN DEVELOPMENT	06.11.2020
90% CONST DOCS	08.19.2020

ELECTRICAL GENERAL NOTES AND SYMBOL LEGEND

E0.1

Drawing File: I:\20xxx\20033.001\20033e01.dwg E01
Plotted by: Andrew Aug 17, 2020 - 2:01pm

LUMINAIRE TYPES 'A, B & C'

LITHONIA LIGHTING®

Catalog Number	
Notes	
Type	

BLT Series LED

2BLT

2' x 2'
LED



FEATURES & SPECIFICATIONS

INTENDED USE — The BLT Best-in-Value Low Profile LED luminaire features a popular center basket design that offers a clean, versatile style and volumetric distribution. High efficacy LED light engines deliver energy savings and low maintenance compared to traditional sources. An extensive selection of configurations and options make the BLT the perfect choice for many lighting applications including schools, offices and other commercial spaces, retail, hospitals and healthcare facilities. The low profile BLT design (2-3/8") also makes it an excellent choice for renovation projects.

CONSTRUCTION — BLT enclosure components are die-formed for dimensional consistency and painted after fabrication with a polyester powder paint for improved performance and protection.

The reflector is finished with a high reflective matte white powder paint for improved aesthetics and increased light diffusion.

End plates contain easy-to-position integral T-bar clips for securely attaching the luminaire to the T-grid. For additional T-grid security, optional screw on T-bar clips are available.

Diffusers are extruded from impact modified acrylic for increased durability.

LED boards and drivers are accessible from the plenum.

OPTICS — Volumetric illumination is achieved by creating an optimal mix of light to walls, partitions and vertical and horizontal work surfaces – rendering the interior space, objects and occupants in a more balanced, complimentary luminous environment. High performance extruded acrylic diffusers conceal LEDs and efficiently deliver light in a volumetric distribution. Four diffuser choices available - curved and square designs with linear prisms or a smooth frosted finish.

ELECTRICAL — Long-life LEDs, coupled with high-efficiency drivers, provide superior quantity and quality of illumination for extended service life. 80% LED lumen maintenance at 60,000 hours (L80/60,000). Color Variation within 3-step MacAdam ellipse (3SDCM).

Non-Configurable BLT: Generic 0-10 volt dimming driver. Dims to 10%

Configurable BLT: available in High Efficiency (HE) versions for applications where a lower wattage (over the standard product) is required. The High Efficiency versions deliver >130 LPW and can be specified via the Lumen Package designations in the Ordering Information below.

eldoLED driver options deliver choice of dimming range, and choices for control, while assuring flicker-free, low-current inrush, 89% efficiency and low EMI.

Optional integrated nLight®controls make each luminaire addressable - allowing them to digitally communicate with other nLight enabled controls such as dimmers, switches, occupancy sensors and photocontrols. Connection to nLight is simple. It can be accomplished with integrated nLight AIR wireless RIO, RES7 sensors, or through standard Cat-5 cabling. nLight offers unique plug-and-play convenience as devices and luminaires automatically discover each other and self-commission. nLight AIR is commissioned easily through an intuitive model app.

Lumen Management: Unique lumen management system (option N80) provides on board intelligence that actively manages the LED light source so that constant lumen output is maintained over the system life, preventing the energy waste created by the traditional practice of over-lighting.

Step-level dimming option allows system to be switched to 50% power for compliance with common energy codes while maintaining fixture appearance.

Driver disconnect provided where required to comply with US and Canadian codes.

SENSOR— Integrated sensor (individual control): Sensor Switch MSD7ADCX ((Passive infrared (PIR)) or MSDPDT7ADCX ((PIR/Microphonics Dual Tech (PDT)) integrated occupancy sensor/automatic dimming photocell allows the luminaire to power off when the space is unoccupied or enough ambient light is entering the space. See page 4 for more details on the integrated sensor.

Integrated Sensor (nLight Wired Networking): This sensor is nLight-enabled, meaning it has the ability to communicate over an nLight network. When wired, using CAT-5 cabling, with other nLight-enabled sensors, power packs, or WallPods, an nLight control zone is created. Once linked to a Gateway, directly or via a Bridge, the zone becomes capable of remote status monitoring and control via SensorView software. See page 4 for the nLight sensor options.

Integrated Smart Sensor (nLight Air Wireless Platform): The RES7 sensor is nLight AIR enabled, meaning it has the ability to communicate over the wireless nLight control platform. It is available with an automatic dimming photocell, and either a digital PIR or a microphonics (PDT) dual technology occupancy sensor. It pairs to other luminaires and wall switches through our mobile app, CL*AIR*ITY, which allows for simple sensor adjustment. See page 4 for more details on the Integrated Smart Sensor.

INSTALLATION — The BLT's low profile design of only 2-3/8" provides increased installation flexibility especially in restrictive plenum applications. The BLT fits into standard 15/16" and narrow 9/16" T-grid ceiling systems.

Suitable for damp location.

For recessed mounting in hard ceiling applications, Drywall Grid Adapters (DGA) are available as an accessory. See Accessories section.

LISTINGS — CSA Certified to meet U.S. and Canadian standards. IC rated.

DesignLights Consortium® (DLC) Premium qualified product. Not all versions of this product may be DLC Premium qualified. Please check the DLC Qualified Products List at www.designlights.org/QPL to confirm which versions are qualified.

WARRANTY — 5-year limited warranty. Complete warranty terms located at www.acuitybrands.com/CustomerResources/Terms_and_conditions.aspx

NOTE: Actual performance may differ as a result of end-user environment and application.
All values are design or typical values, measured under laboratory conditions at 25 °C.
Specifications subject to change without notice.

C.E.C. TITLE 20 COMPLIANT · eldoLED · nLight

Specifications
Length: 23-3/4 (60.3)
Width: 23-3/4 (60.3)
Depth: 2-3/8 (6.0)
Depth with Air supply/return: 2-3/4 (6.9)

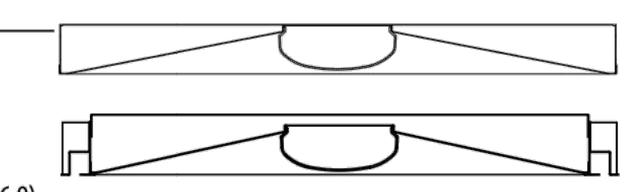

All dimensions are inches (centimeters) unless otherwise specified.

Multiple Diffuser Options

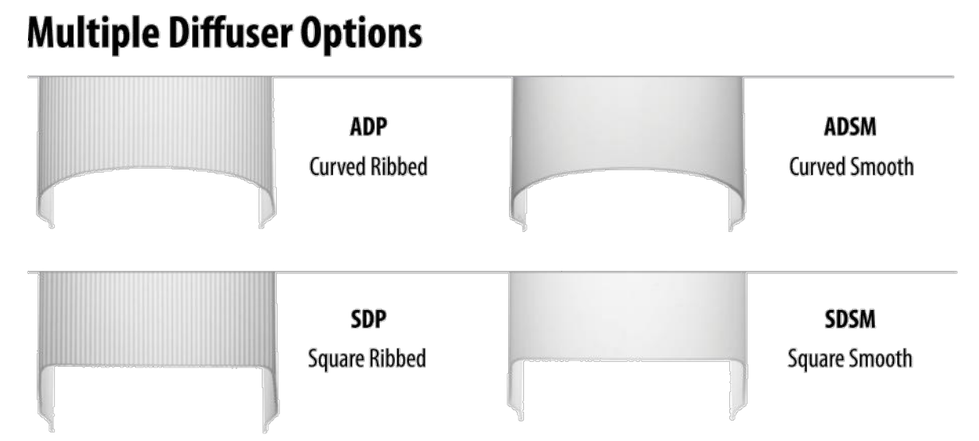

A+ Capable Luminaire

This item is an A+ capable luminaire, which has been designed and tested to provide consistent color appearance and out-of-the-box control compatibility with simple commissioning.

- All configurations of this luminaire meet the Acuity Brands' specification for chromatic consistency
- This luminaire is part of an A+ Certified solution for nLight® control networks when ordered with drivers marked by a shaded background*
- This luminaire is part of an A+ Certified solution for nLight control networks, providing advanced control functionality at the luminaire level, when selection includes driver and control options marked by a shaded background*

To learn more about A+, visit www.acuitybrands.com/aplus.

*See ordering tree for details

LUMINAIRE TYPES 'D & H'

LITHONIA LIGHTING®

Catalog Number	
Notes	
Type	

LDN6

6" OPEN and WALLWASH LED Non-IC New Construction Downlight

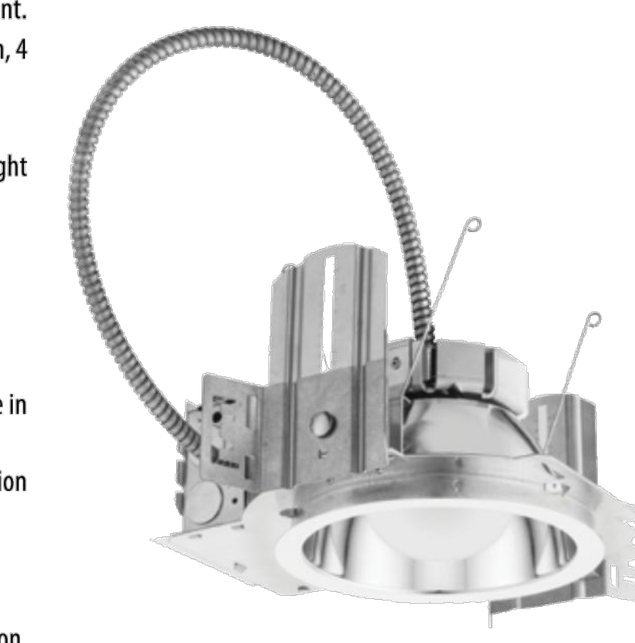

FEATURES & SPECIFICATIONS

INTENDED USE — Typical applications include corridors, lobbies, conference rooms and private offices.

CONSTRUCTION — Galvanized steel mounting/plaster frame; galvanized steel junction box with bottom-hinged access covers and spring latches. Reflectors are retained by torsion springs.

Vertically adjustable mounting brackets with commercial bar hangers provide 3-3/4" total adjustment.

Two combination ½"-3/4" and four ½" knockouts for straight-through conduit runs. Capacity: 8 (4 in, 4 out). No. 12 AWG conductors, rated for 90°C.

Accommodates 12"-24" joist spacing.

Passive cooling thermal management for 25°C standard; high ambient (40°C) option available. Light engine and drivers are accessible from above or below ceiling.

Max ceiling thickness 1-1/2".

OPTICS — LEDs are binned to a 3-step SDCM; 80 CRI minimum.

LED light source concealed with diffusing optical lens.

General illumination lighting with 1.0 S/MH and 55° cutoff to source and source image.

Self-flanged anodized reflectors in specular, semi-specular, or matte diffuse finishes. Also available in white and black painted reflectors.

ELECTRICAL — Multi-volt (120-277V, 50/60Hz) eldoLED 0-10V dimming drivers mounted to junction box, 10% or 1% minimum dimming level available.

0-10V dimming fixture requires two (2) additional low-voltage wires to be pulled.

70% lumen maintenance at 50,000 hours.

LISTINGS — Certified to US and Canadian safety standards. Damp location standard (wet location, covered ceiling optional). ENERGY STAR® certified product.

WARRANTY — 5-year limited warranty. Complete warranty terms located at www.acuitybrands.com/CustomerResources/Terms_and_conditions.aspx

Note: Actual performance may differ as a result of end-user environment and application.
All values are design or typical values, measured under laboratory conditions at 25 °C.
Specifications subject to change without notice.

nLight · WET LOCATION · DIMMABLE LED · C.E.C. TITLE 20 COMPLIANT · ENERGY STAR · A+ CAPABLE

A+ Capable options indicated by this color background.

ORDERING INFORMATION Lead times will vary depending on options selected. Consult with your sales representative.

Example: LDN6 35/15 L06AR LSS MVOLT EZ10

Series		Color temperature		Lumens[1]				Aperture/Trim Color				Finish		Voltage	
LDN6	6" round	27/	2700K	05	500 lumens	25	2500 lumens	L06	Downlight	AR	Clear	LSS	Semi-specular	MVOLT	Multi-volt
		30/	3000K	10	1000 lumens	30	3000 lumens	LW6	Wallwash	WR[2]	White	LD	Matte diffuse	120	120V
		35/	3500K	15	1500 lumens	40	4000 lumens			BR[2]	Black	LS	Specular	277	277V
		40/	4000K	20	2000 lumens	50	5000 lumens								
		50/	5000K												

Driver		Options			
EZ10	0-10V eldoLED driver with smooth and flicker-free deep dimming performance down to 10%	SF[3]	Single fuse	N80[7]	nLight™ Lumen Compensation
EZ1	0-10V eldoLED driver with smooth and flicker-free deep dimming performance down to 1%	TRW[4]	White painted flange	HAO[8]	High ambient option
		TRBL[4]	Black painted flange	WL	Wet Location
		EL[5]	Emergency battery pack with integral test switch, CEC compliant	RRL__	RELOC®-ready luminaire connectors enable a simple and consistent factory installed option across all ABL luminaire brands. Refer to RRL for complete nomenclature. Available only in RRLA, RRLB, RRLAE, and RRLC12S.
		ELR	Emergency battery pack with integral test switch, CEC compliant	USPOM	US point of manufacture
		NPS80EZ[6]	nLight® dimming pack controls 0-10V eldoLED drivers.		
		NPS80EZER[6]	nLight® dimming pack controls 0-10V eldoLED drivers. ER controls fixtures on emergency circuit.		

Accessories: *Order as separate catalog number.*

EAC ISSM 375	Compact interruptible emergency AC power system
EAC ISSM 125	Compact interruptible emergency AC power system
GRA68 JZ	Oversized trim ring with 8" outside diameter[1]
SCA6	Sloped ceiling adapter. Refer to TECH-SCA for more options.

Notes
1 Overall height varies based on lumen package; refer to dimensional chart on page 3.
2 Not available with finishes.
3 120V only.
4 Available with clear (AR) reflector only.
5 Add "SD" for self-diagnostic option (i.e. ELSD)
6 Must specify voltage 120V or 277V.
7 Fixture begins at 80% light level. Must be specified with NPS80EZ or NPS80EZ ER. Only available with EZ10 and EZ1 drivers.
8 Fixture height is 6.5" for all lumen packages with HAO.

LUMINAIRE TYPE 'F'

MILLENIUM STRETCH™
MLHA5 SERIES – VANITY

PROJECT INFORMATION
Job Name ______
Fixture Type ______
Catalog Number ______
Approved by ______

PRODUCT FEATURES:
» Surface mount – wall; 5"×24" and 48"
» Extruded aluminum housing with decorative end caps
» Low-profile –ADA compliant
» Peace of Mind Guarantee® against breakage

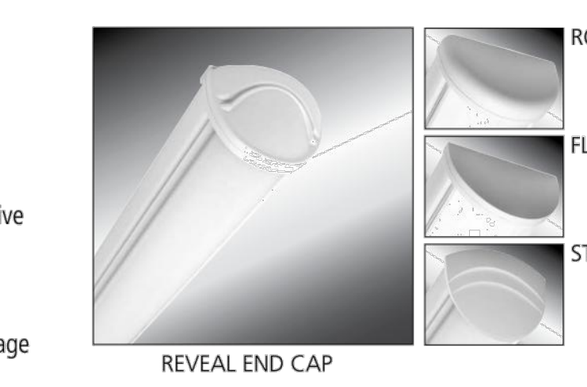

SPECIFICATIONS

HOUSING: Marine grade aluminum. Extruded body with die-cast end caps. Housing, with end caps, post assembly TGIC polyester powder coat finished – 5-step pre-treatment. See Ordering Information for standard, optional and custom finishes.

REFLECTOR: Full reflector/wire cover – 92% reflectivity.

LENS: UV-stabilized, high impact extruded pearlescent polycarbonate. Smooth exterior, linear prismatic interior. Nominal thickness .156". Lens securely positioned in body channels and end caps. Lens locked in place with tamper-resistant stainless steel Torx® with center pin fasteners and sealed with closed cell gaskets.

END CAPS: Marine grade die-cast aluminum. Four styles available: Flat, Rounded, Reveal and Stepped.

HARDWARE: Four stainless steel, tamper-resistant Torx® with center pin fasteners secure lens in housing body's lens channel.

ELECTRICAL: Available 3500K, 4000K and 5000K color temperatures, 82 CRI. 120-277VAC and 347VAC, 50/60Hz electrical input with serviceable high power factor electronic, constant-current driver (<20% THD, >0.95 PF). Standard 0-10V dimming with 1-100% range and dim-to-dark capabilities; maximum driver source of 165µA. Consult factory for flourescent options.

INSTALLATION: Standard two-point (24" housing) or four-point (48" housing) mounting required for Peace of Mind Guarantee®.

PHOTOMETRICS: Photometry tested to the IESNA LM-79-08 standard by an ILAC/ISO17025 accredited laboratory. For additional photometric data, please go to www.kenall.com.

WARRANTY: limited ten (10) year warranty for LED Lamps.

LISTINGS: Luminaire is certified to UL Standards by Intertek Testing Laboratory for Damp Location— horizontal and vertical wall mount. ADA compliant.

LED · PEACE OF MIND Guarantee® · ETL · ADA

ORDERING INFORMATION (Ex: MLHA5V-48-F-MB-PP-45L40K-DCC-DV-FS)

Model	Length	End Cap	Finish	Lens	Lamp Type	Driver	Voltage	Options	Accessories
MLHA5V						DCC			

Length
24 2'
48 4'

End Caps
F Flat
R Rounded
RV Reveal
SP Stepped

Finish
MW Matte White
MB Matte Black
LG Light Gray
CC Custom Color (Consult Factory)

Lens
PP Pearlescent Polycarbonate

Lamp Type
2' Lengths
25L35K 25 Watt 3500K LED
25L40K 25 Watt 4000K LED
25L50K 25 Watt 5000K LED

4' Lengths
45L35K 45 Watt 3500K LED
45L40K 45 Watt 4000K LED
45L50K 45 Watt 5000K LED

Driver
DCC Dimming Constant Current

Voltage
120 120 Volts
277 277 Volts
347 347 Volts
DV 120-277 Volts

Options
LEL Integral 8.4W Emergency Battery Backup (45L only; 0°C minimum operating temperature; n/a with 347V)
CDF Captive Diffuser Fasteners
FS Single Fuse & Holder
NAT Natatorium Environment Option
PH Phillips Head Fasteners

Accessories
9500 Torx® Screwdriver
D-0552 Torx® Driver Bit (Required for CMB Option)

KENALL® www.kenall.com | P: 800-4-Kenall | F: 262-891-9701 | 10200 55th Street Kenosha, Wisconsin 53144, USA — A brand of legrand®
This product complies with the Buy American Act: manufactured in the United States with more than 50% of the component cost of US origin. It may be covered by patents found at www.kenall.com/patents.Content of specification sheets is subject to change; please consult www.kenall.com for current product details. ©2019 Kenall Mfg.Co.

LUMINAIRE TYPE 'G'

LITHONIA LIGHTING®

Catalog Number	
Notes	
Type	

LED Linear

CLX

24", 36", 48" and 96" Lengths



FEATURES & SPECIFICATIONS

INTENDED USE — The CLX is a linear lighting solution that is available in multiple lengths, lumen packages and distributions. Designed for versatility, the CLX can address virtually any indoor lighting need. The CLX is also offered in standard and high efficacy configurations and capable of being continuous row mounted or installed as a stand-alone fixture. Ideal for uplight and downlight in commercial, retail, manufacturing, warehouse, and display applications. **Certain airborne contaminants can diminish the integrity of acrylic and/or polycarbonate. Click here for Acrylic-Polycarbonate Compatibility table for suitable uses.**

CONSTRUCTION — Channel and cover are formed from code-gauge cold-rolled steel. Housing and lens endcaps are injection molded plastic to provide a more architectural look and feel. The endcaps come standard with a 7/8" knock out for continuous mounting but can be ordered without.

Finish: Paint options include high-gloss, baked white polyester (WH), galvanized (GALV), matte black (MB) and smoke gray (SKGY). Five-stage iron phosphate pre-treatment ensures superior paint adhesion and rust resistance.

OPTICS — Offered with acrylic lens and less lens configurations. Provides a choice of optical distributions including, wide, narrow, and aisle.

ELECTRICAL — Utilizes high-output LEDs integrated on a two-layer circuit board, ensuring cool-running operation. Optional internal pluggable wiring harness for reduced labor cost in row mounting applications. (See PLR_ ordering information on page 15.) Electronic LED driver is multi-volt input and 0-10V dimming standard (see Operational Data on page 12 for actual wattage consumption). This fixture is designed to withstand a maximum line surge of 2.5kV at 0.75kA combination wave for indoor locations, for applications requiring higher level of protection additional surge protection must be provided.

L70>100,000 hours at 25˚C.

LEDs provide nominal 80 CRI or 90CRI at 3000 K, 3500 K,4000 K, or 5000 K.

Lumen output up to 2,500 lumens per foot.

INSTALLATION — Fixture may be ceiling or wall mounted (with or without THCLX hanger or angle mounted with CLXANGBRT), pendant or stem mounted with appropriate mounting options.

WARNING — Removing the lens and opening the fixture during installation exposes the LEDs, putting them at risk for damage.

If you plan to surface mount the fixture, we recommend using the THCLX. This eliminates the need to open the fixture.

If you plan to continuous row mount, we recommend using the PLR wiring harness option. This eliminates the need to open the fixture.

Damage to the LEDs caused during installation will not be covered under the warranty.

LISTINGS — CSA certified to US and Canadian safety standards. For use in damp locations between -4°F (-20°C) and 104°F (40°C). Optional High Ambient (HA) ranging to 122°F(50°C) available on certain lumen packages (See ambient temperature chart for additional information).
DesignLights Consortium® (DLC) Premium qualified product and DLC qualified product. Not all versions of this product may be DLC Premium qualified or DLC qualified. Please check the DLC Qualified Products List at www.designlights.org/QPL to confirm which versions are qualified.

WARRANTY — 5-year limited warranty. Complete warranty terms located at: www.acuitybrands.com/resources/terms-and-conditions

Note: Actual performance may differ as a result of end-user environment and application.
All values are design or typical values, measured under laboratory conditions at 25 °C.
Specifications subject to change without notice.

Stock configurations are offered for shorter lead times:

Stock Part Number	UPC	DLC QPL Product ID	DLC Premium
CLX L48 3000LM SEF FDL MVOLT GZ10 40K 80CRI WH	00191723525816	PJANKZR4	Yes
CLX L48 3000LM SEF FDL MVOLT GZ10 50K 80CRI WH	00191723525885	PKW32VKL	Yes
CLX L48 5000LM SEF FDL MVOLT GZ10 40K 80CRI WH	00191723525939	P77I8Z20	Yes
CLX L48 5000LM SEF FDL MVOLT GZ10 50K 80CRI WH	00191723525908	P8A42C1H	Yes
CLX L96 6000LM SEF FDL MVOLT GZ10 40K 80CRI WH	00191723525861	PPFTGRBV	Yes
CLX L96 6000LM SEF FDL MVOLT GZ10 50K 80CRI WH	00191723525915	PW6250TE	Yes
CLX L96 10000LM SEF FDL MVOLT GZ10 40K 80CRI WH	00191723525922	PYKOC7EW	Yes
CLX L96 10000LM SEF FDL MVOLT GZ10 50K 80CRI WH	00191723525830	PKYPL35K	Yes
CLX L48 3000LM SEF RDL MVOLT GZ10 40K 80CRI WH	00191723525960	PJANKZR4	Yes
CLX L48 3000LM SEF RDL MVOLT GZ10 50K 80CRI WH	00191723525892	PKW32VKL	Yes
CLX L48 5000LM SEF RDL MVOLT GZ10 40K 80CRI WH	00191723525854	P77I8Z20	Yes
CLX L48 5000LM SEF RDL MVOLT GZ10 50K 80CRI WH	00191723525946	P8A42C1H	Yes
CLX L96 6000LM SEF RDL MVOLT GZ10 40K 80CRI WH	00191723525878	PPFTGRBV	Yes
CLX L96 6000LM SEF RDL MVOLT GZ10 50K 80CRI WH	00191723525823	PD0SSIAD	Yes
CLX L96 10000LM SEF RDL MVOLT GZ10 40K 80CR WH	00191723525953	PYKOC7EW	Yes
CLX L96 10000LM SEF RDL MVOLT GZ10 50K 80CRI WH	00191723525847	PKYPL35K	Yes

A+ Capable Luminaire

This item is an A+ capable luminaire, which has been designed and tested to provide consistent color appearance and out-of-the-box control compatibility with simple commissioning.

- All configurations of this luminaire meet the Acuity Brands' specification for chromatic consistency
- This luminaire is part of an A+ Certified solution for nLight® or XPoint™ Wireless control networks marked by a shaded background*

To learn more about A+, visit www.acuitybrands.com/aplus.

*See ordering tree for details

LUMINAIRE TYPE 'K'



WSR LED

Architectural Wall Sconce

NIGHTTIME FRIENDLY · DLC PREMIUM · DLC

Inverted available with WLU option only.

Catalog Number	
Notes	
Type	

Hit the Tab key or mouse over the page to see all interactive elements.

Introduction

Classic Architectural Wall Sconce with the LED technology. Long-life, maintenance-free product with typical energy savings of 80% compared to metal halide versions. The integral battery backup option provides emergency egress lighting, without the use of a back-box or remote gear, so installations maintain their aesthetic integrity. The WSR LED is ideal for replacing existing 50 – 250W metal halide wall-mounted products. The expected service life is 20+ years of nighttime use.

Specifications
Luminaire

Height:	7-1/4" (18.4 cm)
Width:	18" (45.7 cm)
Depth:	9" (22.8 cm)
Weight:	17 lbs (7.7 kg)

Optional Back Box (BBW)

Height:	4" (10.2 cm)
Width:	5-1/2" (14.0 cm)
Depth:	1-1/2" (3.8 cm)

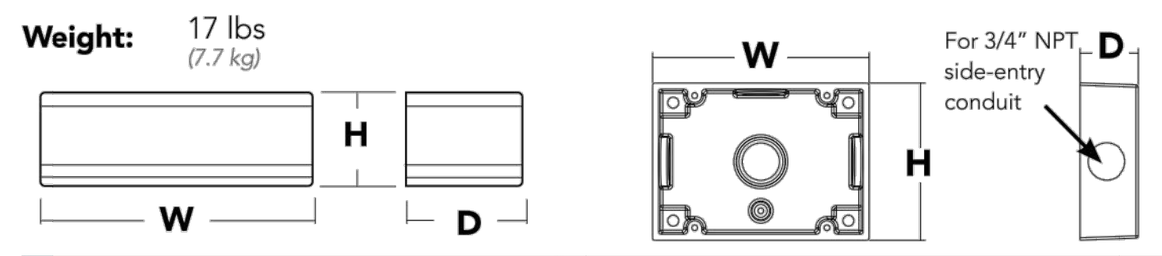

Ordering Information

EXAMPLE: WSR LED P2 40K SR3 MVOLT DDBTXD

WSR LED

Series	Performance Package	Color Temperature	Distribution		Voltage	Mounting		Options		Finish *(required)*	
WSR LED	P1	30K	SR2	Type II	MVOLT[1]	**Shipped included**		**Shipped installed**		DDBXD	Dark bronze
	P2	40K	SR3	Type III	120	(blank)	Surface mount	PE	Photoelectric cell, button type[2,3]	DBLXD	Black
	P3	50K	SR4	Type IV	208	**Shipped separately**[2]		SF	Single fuse (120, 277, 347V)[4]	DNAXD	Natural aluminum
	P4				240	BBW	Surface-mounted back box	DF	Double fuse (208, 240, 480V)[4]	DWHXD	White
					277			DMG	0-10v dimming wires pulled outside fixture (for use with an external control, ordered separately)	DSSXD	Sandstone
					347			E20WC	Emergency battery backup, (18W, -20°C), Certified in CA Title 20 MAEDBS[5]	DDBTXD	Textured dark bronze
					480			E10WH	Emergency battery backup, (10W, 5°C), Certified in CA Title 20 MAEDBS[5]	DBLBXD	Textured black
								WLU	Wet location door for up orientation[6]	DNATXD	Textured natural aluminum
								PIR	Motion/ambient light sensor[7]	DWHGXD	Textured white
								DS	Dual switching[8]	DSSTXD	Textured sandstone
								SPD	Separate Surge Protection[9]		
								Shipped separately			
								VG	Vandal guard		
								WG	Wire guard		

Emergency Battery Operation

The emergency battery backup (E20WC & E10WH options) is integral to the luminaire - no external housing required! This design provides reliable emergency operation while maintaining the aesthetics of the product.

All E20WC and E10WH configurations include an independent secondary driver with an integral relay to immediately detect AC power loss.

The emergency battery will power the luminaire for a minimum duration of 90 minutes (maximum duration of three hours) from the time supply power is lost, per International Building Code Section 1006 and NFPA 101 Life Safety Code Section 7.9, provided luminaires are mounted at an appropriate height and illuminate an open space with no major obstructions.

The examples below show illuminance of 1 fc average and 0.1 fc minimum of the P1 power package Type IV product in emergency mode.

WSR P1 LED 40K SR4 MVOLT E20WC
10' x 10' Gridlines
8' and 12' Mounting Height

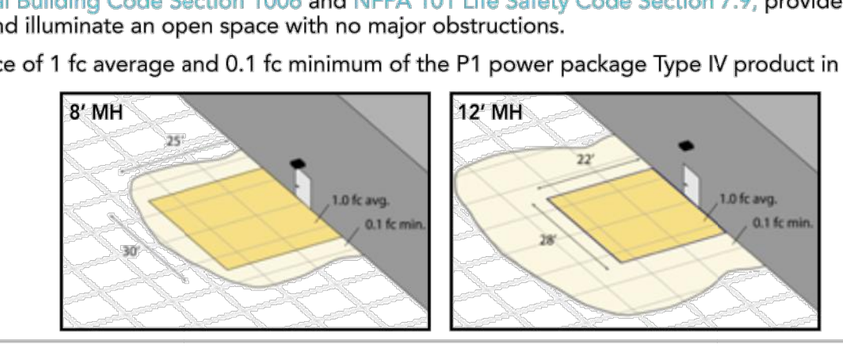

NOTES
1 MVOLT driver operates on any line voltage from 120-277V (50/60 Hz).
2 Not available with 480V option.
3 3 PE requires specified voltage.
4 Single fuse (SF) requires 120V, 277V or 347V options. Double fuse (DF) requires 208V, 240V or 480V options,
5 Not available with 347V or 480V. Not available with WLU.
6 WLU not available with PIR, E20WC or E10WH.
7 See PIR Table for default settings.
8 Only available with P3 & P4 packages. Provides 50/50 luminaire operation via two independent drivers and light engines on two separate circuits. Not available with E20WC, E10WH, WLU, SF, or DF. When ordered with photocell (PE) or motion sensor (PIR), only the primary power source leads will be controlled.
9 See electrical section on page 2 for more details.

LITHONIA LIGHTING. One Lithonia Way • Conyers, Georgia 30012 • Phone: 800.279.8041 • www.lithonia.com
© 2011-2019 Acuity Brands Lighting, Inc. All rights reserved.

LUMINAIRE TYPE 'X'

LITHONIA LIGHTING®

Catalog Number	
Notes	
Type	



QUANTUM®
Thermoplastic Exits

LQM

LED LAMPS

NEMA Premium · LED

FEATURES & SPECIFICATIONS

INTENDED USE — Ideal for applications requiring attractive, quick-installation exit signs and low energy consumption.

CONSTRUCTION — Engineering-grade thermoplastic housing is impact-resistant, scratch-resistant, and corrosion-proof. UL94V-0 flame rating. UV-stable resin resists discoloration from natural and man-made light sources.

Rugged unibody housing snaps together with no additional mechanical fasteners. Faceplate and back cover are interchangeable on housing. Positive snap-fit tabs hold faceplate securely, yet easily removable for lamp compartment access.

Universal directional Chevron inserts are easily removed and reinserted. Uniform illumination without shadows or hot spots. Reinforced, impact-resistant color panels. Letters 6" high with 3/4" stroke, with 100 ft. viewing distance rating, based upon UL924 standards.

U.S. Patent No. 5,526,251; 5,611,163; 5,739,639; 5,954,423; 5,988,825; 6,152,581; D383,501 ; D495,751 and 6,502,044. Other patents pending.

OPTICS — LEDs mounted on printed circuit boards. Low energy consumption – less than one watt. LED lamp operates in normal (AC input) and emergency (DC input) modes.

The typical life of the exit LED lamp is 10 years.

ELECTRICAL — Low-voltage disconnect prevents excessively deep discharge that can permanently damage battery. Conveniently located test switch and LED provide visual and manual means of monitoring system.

Constant-current series charger minimizes energy consumption and provides low operating costs. Printed circuit boards are 100% quality tested during manufacturing. Current-limiting charger circuitry protects printed circuit boards from shorts.

AC/LV reset (line latch) allows battery connection before AC power is applied and aids in preventing battery damage from deep discharge.

Crystal oscillator timing system with watchdog protection for precision accuracy.

Brownout protection is automatically switched to emergency mode when supply voltage drops below 80% of nominal.

Battery: Sealed, maintenance-free nickel-cadmium battery delivers 90-minutes capacity to emergency lamps. Two-state constant-current charge maximizes battery life and automatically recharges after battery discharge.

Diagnostics: Single-point microcomputer control for all electronic features.

Single multi-chromatic LED indicator to display two-state charging, test activation and three-state diagnostic status.

Test switch provides manual activation of 30-second diagnostic testing for on-demand visual inspection. Self-diagnostic testing for five minutes every 30 days and 30 minutes every six months and 90 mins annually with WRS.

Diagnostic evaluation of LED light source, AC to DC transfer, charging and battery condition. Continuously monitors AC functionality.

INSTALLATION — Universal (top-, end-, or back-) mounting. Easily removed mounting knockouts. J-box pattern on back panel. Housing snaps to canopy with four positive-locking tabs. Cam-locking pin tightly secures housing to canopy.

Ships standard with additional face plate.

LISTINGS — UL damp location listed 50°-104°F (10°-40°C) standard. NOM Certified (see options). Meets UL924, NFPA 101 (current Life Safety Code), NEC and OSHA illumination standards. NEMA Premium certified.

Meets all applicable FCC requirements.

Specifications
Length: 11-3/4 (29.8)
Depth: 2 (5.1)
Height: 7-5/8 (19.3)
Weight: 2.6 lbs (1.2 kgs)

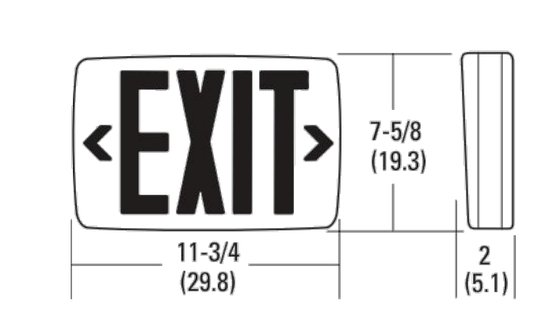

All dimensions are inches (centimeters) unless otherwise specified.

WARRANTY — 5-year limited warranty. (Battery is prorated.) Complete warranty terms located at www.acuitybrands.com/CustomerResources/Terms_and_conditions.aspx
Actual performance may differ as a result of end-user environment and application.
Note: Specifications subject to change without notice.

ORDERING INFORMATION For shortest lead times, configure product using **bolded options.**

Example: LQM S W 3 R 120/277 EL N

LQM

Family	Face type		Housing color		Number of faces		Letter color		Input voltage[2]		Operation		Options	
LQM	S	Stencil	(blank)	Black	3	Single face with extra faceplate and color panel	R	Red	120/277	Dual voltage	(blank)	AC only	(blank)	None
	P	Panel[1]	W	White			G	Green			X2	Primary and secondary AC inputs provided[3]	NOM	NOM certified for Mexico[4]
											EL N	Nickel cadmium battery	SD	Self-diagnostics[5]
													SDFIFA	Self-diagnostics, fire alarm flashing interface and flashing emergency operation and intermittent audible alarm (one flash/one second)[5]

Accessories: Order as separate item.

ELA WG1	Back-mount wireguard[6]	ELA WGEXE	End-mount wireguard[6]
ELA WGEXT	Top-mount wireguard[6]	ELA LQMUS12	12" stem kit[7]

Notes
1 Only available in custom signage. See spec sheet, Custom-Signage.
2 Some special voltages available. Consult factory.
3 Must specify input voltage 120 or 277. Not available with other options.
4 Available with stencil or panel faces in white housing.
5 Only available with EL N operation.
6 See spec sheet ELA-WG.
7 See spec sheet ELA-Stemkits.

WILDERARCHITECTURE, INC.
1315 E. SEVENTH AVENUE
SUITE 106
TAMPA, FLORIDA 33605.3607

TELEPHONE 813.242.6677
FACSIMILE 813.242.6683

wilderarchitecture.com

AA26000655

AGI
Anston-Greenlees, Inc.
Mechanical & Electrical Consulting Engineers
1315 West Fletcher Avenue, Tampa, FL 33612 Tel(813)963-1919
Email: AGI@agi-engineers.com HTTP://www.agi-engineers.com
Florida Engineering Business Number 6093

NOT FOR CONSTRUCTION

ROBERT C. ANSTON, P.E. 40858

TO THE BEST OF MY KNOWLEDGE, THESE DRAWINGS AND THE PROJECT MANUAL ARE COMPLETE AND COMPLY WITH THE 2017 FLORIDA BUILDING CODE

THIS ITEM HAS BEEN ELECTRONICALLY SIGNED AND SEALED ON THE DATE/TIME STAMP SHOWN USING A DIGITAL SIGNATURE. PRINTED COPIES OF THIS DOCUMENT ARE NOT CONSIDERED SIGNED AND SEALED AND THE SIGNATURE MUST BE VERIFIED ON ANY ELECTRONIC COPIES.

HILLSBOROUGH COUNTY BOARD
OF COUNTY COMMISSIONERS
COUNTY CENTER
601 E KENNEDY BLVD
TAMPA, FL 33601

HILLSBOROUGH COUNTY
NORTHWEST AREA HEAD START

PROJECT #: 2010-00

DISTRIBUTION	DATE
DESIGN DEVELOPMENT	06.11.2020
90% CONST DOCS	08.19.2020

LUMINAIRE CUT SHEETS

E0.2

Drawing File: I:\20xxx\20033.001\20033e02.dwg E02
Plotted by: Andrew Aug 17, 2020 – 2:01pm

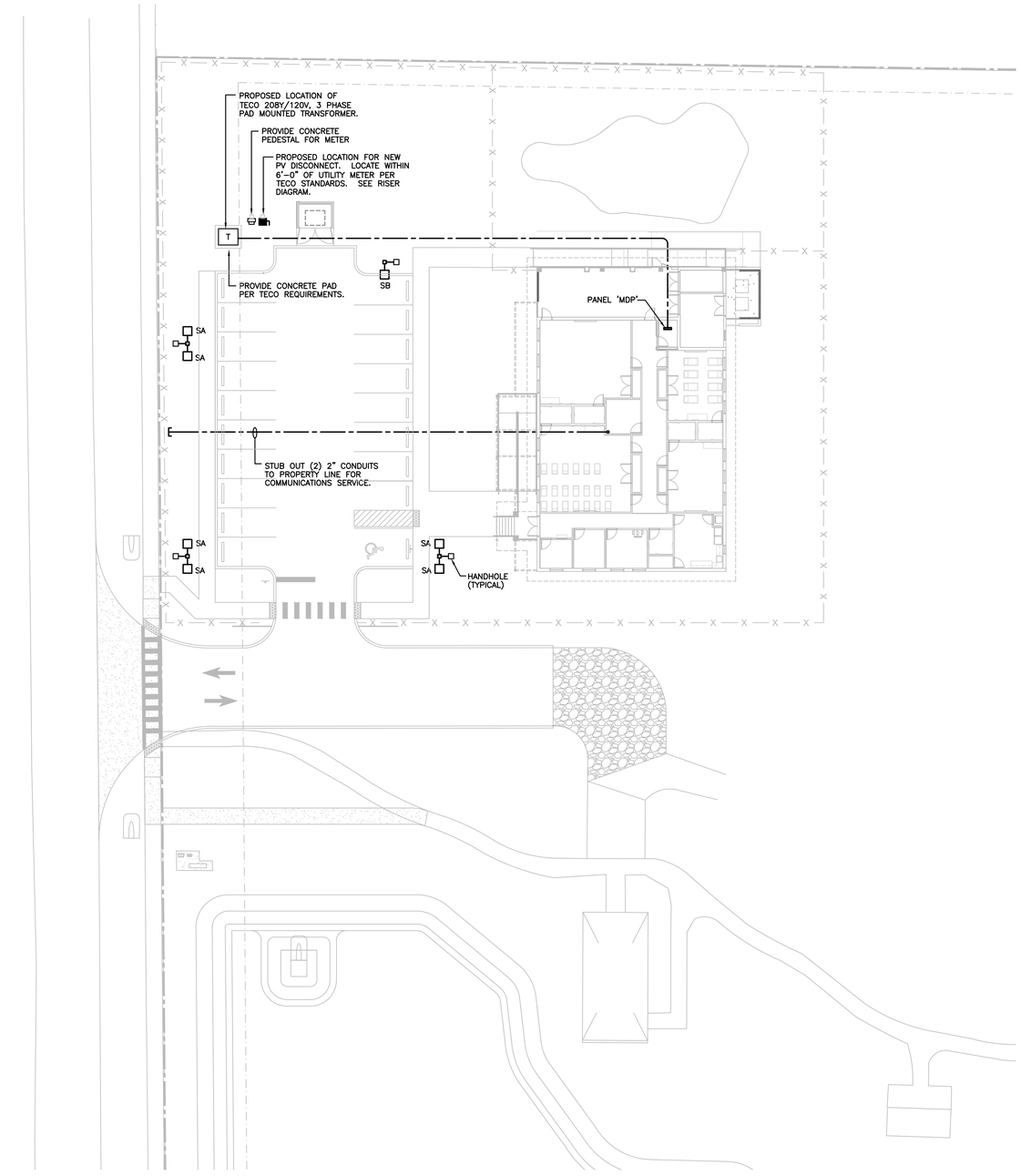

GENERAL NOTES:

1. COORDINATE ALL SITE WORK WITH OWNER AND UTILITY COMPANIES.
2. ALL CONDUIT RUN BELOW BUILDINGS SHALL BE AT LEAST 24" BELOW GRADE. COORDINATE DEPTH WITH ALL OTHER UTILITIES.
3. ALL CONDUIT ROUTED UNDERGROUND SHALL BE A MINIMUM OF 3/4" AND SHALL BE BURIED A MINIMUM OF 24" B.F.G.
4. HAND DIG TRENCHES NEAR ANY EXISTING UTILITIES OR SYSTEMS (I.E. IRRIGATION, ETC.). DAMAGE TO ANY EXISTING UTILITIES OR SYSTEMS SHALL BE REPAIRED TO NEW CONDITION AT NO COST TO THE OWNER.
5. PROVIDE HANDHOLES AND PULLBOXES AS REQUIRED. ALL PULLBOXES SHALL BE POLYMER CONCRETE (QUASITE OR EQUAL), FULL TIER 22 TRAFFIC RATED BOX AND COVER. COVERS TO BE LIFT OUT, LOCKING TYPE WITH (2) HEX HEAD BOLTS. COVERS TO INDICATE "ELECTRICAL". PROVIDE GRAVEL (1FT.) IN BOTTOM OF PULLBOX.
6. DIRECTIONAL BORE WHERE POSSIBLE. DIRECTIONAL BORE UNDER ANY EXISTING SIDEWALKS OR PAVEMENT/DRIVES.
7. COMPACT AND FILL ALL TRENCHES AND RESTORE DAMAGED GRASS AREAS TO ORIGINAL CONDITION WITH SOD (NO SEED ALLOWED).

ELECTRICAL SITE PLAN
1" = 20'-0"

A1

1315 E. SEVENTH AVENUE
SUITE 106
TAMPA, FLORIDA 33605.3607

TELEPHONE 813.242.6677
FACSIMILE 813.242.6683

wilderarchitecture.com

AA26000655

WILDERARCHITECTURE, INC.

AGI
Anston-Greenlees, Inc.
Mechanical & Electrical Consulting Engineers
1315 West Fletcher Avenue, Tampa, FL 33612 Tel(813)963-1919
Email: AGI@agi-engineers.com HTTP://www.agi-engineers.com
Florida Engineering Business Number 6093

NOT FOR CONSTRUCTION

ROBERT C. ANSTON, P.E. 40855

TO THE BEST OF MY KNOWLEDGE, THESE DRAWINGS AND THE PROJECT MANUAL ARE COMPLETE AND COMPLY WITH THE 2017 FLORIDA BUILDING CODE

THIS ITEM HAS BEEN ELECTRONICALLY SIGNED AND SEALED ON THE DATE/TIME STAMP SHOWN USING A DIGITAL SIGNATURE. PRINTED COPIES OF THIS DOCUMENT ARE NOT CONSIDERED SIGNED AND SEALED AND THE SIGNATURE MUST BE VERIFIED ON ANY ELECTRONIC COPIES.

HILLSBOROUGH COUNTY BOARD
OF COUNTY COMMISSIONERS
COUNTY CENTER
601 E KENNEDY BLVD
TAMPA, FL 33601

HILLSBOROUGH COUNTY
NORTHWEST AREA HEAD START

PROJECT #: 2010-00

DISTRIBUTION	DATE
DESIGN DEVELOPMENT	06.11.2020
90% CONST DOCS	08.19.2020

ELECTRICAL SITE PLAN

E0.3

Drawing File: I:\20xxx\20033.001\20033e03.dwg E03
Plotted by: Andrew Aug 17, 2020 - 2:02pm

GENERAL NOTES:

1. CONNECT EXIT LUMINAIRES AND EMERGENCY BATTERY PACKS TO UNSWITCHED LEG OF LOCAL LIGHTING CIRCUIT.

DRAWING NOTES:

1. 3/4"C WITH 2 #10, 1 #10 EG FOR ENTIRE CIRCUIT. ROUTE CIRCUIT VIA PHOTOCELL/TIMECLOCK. SEE DETAIL ON ELECTRICAL DETAILS SHEET.
2. COORDINATE EXACT MOUNTING LOCATIONS OF LUMINAIRES WITH AIR HANDLER AND DUCTWORK.

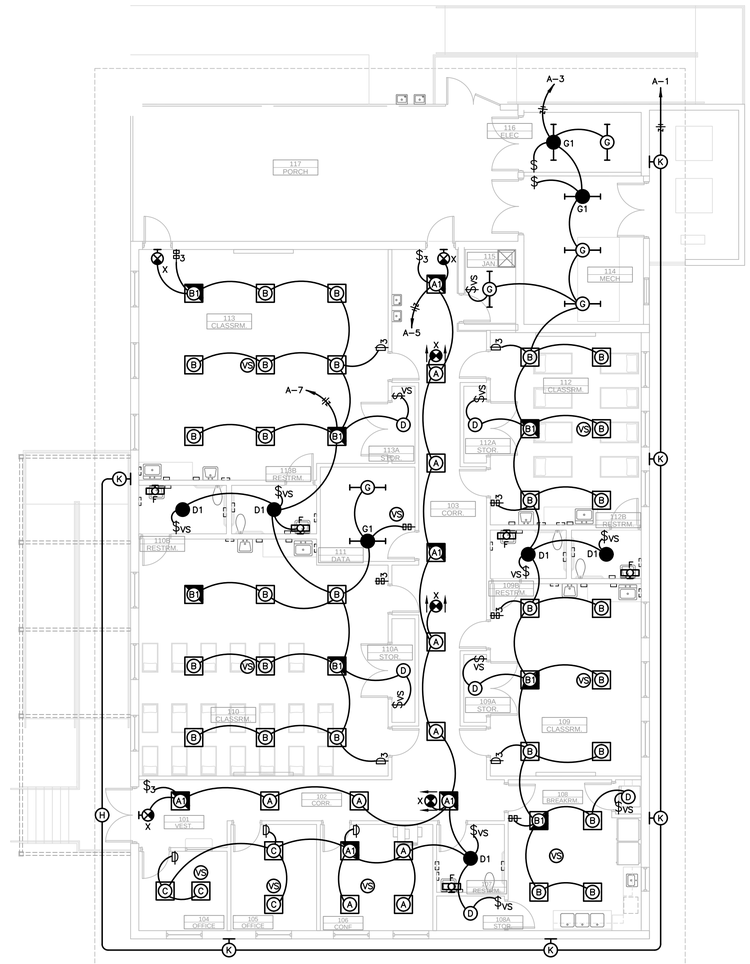

1315 E. SEVENTH AVENUE
SUITE 106
TAMPA, FLORIDA 33605.3607

TELEPHONE 813.242.6677
FACSIMILE 813.242.6683

wilderarchitecture.com

AA26000655

WILDERARCHITECTURE, INC.

AGI
Anston-Greenlees, Inc.
Mechanical & Electrical Consulting Engineers
1315 West Fletcher Avenue, Tampa, FL 33612 Tel(813)963-1919
Email: AGI@agi-engineers.com HTTP://www.agi-engineers.com
Florida Engineering Business Number 6093

NOT FOR CONSTRUCTION

ROBERT C. ANSTON, P.E. 40855

TO THE BEST OF MY KNOWLEDGE, THESE DRAWINGS AND THE PROJECT MANUAL ARE COMPLETE AND COMPLY WITH THE 2017 FLORIDA BUILDING CODE

THIS ITEM HAS BEEN ELECTRONICALLY SIGNED AND SEALED ON THE DATE/TIME STAMP SHOWN USING A DIGITAL SIGNATURE. PRINTED COPIES OF THIS DOCUMENT ARE NOT CONSIDERED SIGNED AND SEALED AND THE SIGNATURE MUST BE VERIFIED ON ANY ELECTRONIC COPIES.

HILLSBOROUGH COUNTY BOARD
OF COUNTY COMMISSIONERS
COUNTY CENTER
601 E KENNEDY BLVD
TAMPA, FL 33601

HILLSBOROUGH COUNTY
NORTHWEST AREA HEAD START

PROJECT #: 2010-00

DISTRIBUTION	DATE
DESIGN DEVELOPMENT	06.11.2020
90% CONST DOCS	08.19.2020

LIGHTING PLAN

E1.1

Drawing File: I:\20xxx\20033.001\20033e11.dwg E11
Plotted by: Andrew Aug 17, 2020 - 2:02pm

GENERAL NOTES:

1. VERIFY EXACT LOCATION AND MOUNTING HEIGHTS OF ALL ELECTRICAL DEVICES WITH ARCHITECTURAL PLANS AND ELEVATIONS PRIOR TO ROUGH-IN.
2. PROVIDE TAMPER-RESISTANT RECEPTACLES FOR ALL NON-LOCKING-TYPE 120 VOLT, 15 AND 20 AMP RECEPTACLES PER NEC 406.12 (C).

DRAWING NOTES:

1. REFER TO MECHANICAL EQUIPMENT ELECTRICAL CONNECTION SCHEDULE ON SHEET E5.1 FOR ELECTRICAL CONNECTION REQUIREMENTS OF MECHANICAL EQUIPMENT SHOWN ON THIS PLAN. COORDINATE WITH DIVISION 23 CONTRACTOR TO ENSURE ALL NEW EQUIPMENT DISCONNECTS, VFD'S, STARTERS, ETC. (INCLUDING DISCONNECTS BY DIVISION 23) ARE MOUNTED IN A MANNER TO PROVIDE THE PROPER NEC REQUIRED WORKING CLEARANCE IN FRONT OF EQUIPMENT. THIS AREA (INCLUDING FOOTSPACE) SHALL HAVE NO OBSTRUCTIONS FROM ANY HVAC UNITS, CONCRETE PADS, ASSOCIATED PIPING, STRUCTURAL MEMBERS, RACEWAYS, BOXES, ETC. ADVISE ENGINEER PRIOR TO ROUGH-IN OF EQUIPMENT OR INSTALLATION OF FEEDERS/BRANCH CIRCUITS IF A NEW LOCATION IS REQUIRED.
2. "C" DENOTES A "CONTROLLED" RECEPTACLE. ROUTE CIRCUIT VIA TIMECLOCK/CONTACTOR FOR AUTOMATIC TIME CONTROL OF RECEPTACLES. SEE RECEPTACLE TIME CONTROL DIAGRAM ON ELECTRICAL DETAILS SHEET. PROVIDE RECEPTACLE WITH PERMANENT MARKING BY MANUFACTURER INDICATION IT IS A "CONTROLLED" RECEPTACLE.
3. PROVIDE DIGITAL WALL TIMER WITH 2 HOUR ENERGY CODE PRESET FEATURE FOR OVERRIDE "ON" OF RECEPTACLES ON TIME CONTROL. TORK #SS423, OR APPROVED EQUIVALENT. SEE RECEPTACLE TIME CONTROL DIAGRAM ON ELECTRICAL DETAILS SHEET. PROVIDE LABEL ON TIMER TO READ "RECEPTACLES OVERRIDE". FIELD COORDINATE EXACT LOCATION WITH ARCHITECT PRIOR TO ROUGH-IN.
4. THIS AREA IS RESERVED FOR THE OWNER'S TELECOM EQUIPMENT, SECURITY EQUIPMENT, TELECOM UTILITY DEMARK, AND ASSOCIATED CONNECTIONS AND CABLING.
5. PROVIDE TELECOM GROUND BAR. 1/4" X 4" X 10" MINIMUM COPPER GROUND BAR ON 2" STAND-OFFS. MOUNT AT 16" AFF TO BOTTOM. BOND THE GROUND BAR TO THE NEW ELECTRICAL SERVICE ENTRANCE GROUNDING ELECTRODE SYSTEM VIA A NEW #3/0 AWG COPPER CONDUCTOR CONNECTED TO A NEW 10' X 3/4" COPPER CLAD STEEL GROUND ROD. BOND THIS NEW ROD TO THE ELECTRODE SYSTEM VIA #3/0 AWG. CONNECTIONS TO ALL GROUND RODS SHALL BE EXOTHERMIC WELD TYPE.
6. PROVIDE FIVE (5) 4" RACEWAYS FROM THE DATA ROOM TO HAND HOLE (MINIMUM 24"x32") AT PROPERTY LINE FOR TELECOM UTILITY SERVICE. RACEWAYS SHALL STUB-UP 6" AFF MINIMUM AND BE CAPPED. PROVIDE PULL CORD IN RACEWAYS. REFER TO SITE PLAN FOR MORE INFORMATION.
7. PROVIDE 3/4" FIRE RATED BACKBOARD ON ALL WALLS FROM THE FLOOR TO CEILING. USE TWO 4 FOOT WIDE BOARDS MOUNTED HORIZONTALLY ONE ON TOP OF THE OTHER AND CUT IN THE FIELD AS REQUIRED TO FILL THE WALLS. RECEPTACLES SHALL BE EXTENDED THROUGH THE PLYWOOD OR SURFACE MOUNTED.
8. FLOOR MOUNTED IT RACK BY OWNER. MOUNT RECEPTACLE DIRECTLY ON RACK. COORDINATE EXACT LOCATION WITH OWNER PRIOR TO ROUGH-IN.
9. PROPOSED LOCATION FOR 120/208, 3 PHASE INVERTER. SEE RISER DIAGRAM.
10. PROPOSED LOCATION FOR PV SOLAR SYSTEM DATA MONITOR. SEE PV SOLAR SYSTEM GENERAL NOTE #1 ON SHEET E4.1 FOR MORE INFORMATION.
11. PROVIDE JUNCTION BOX FOR ELECTRICAL CONNECTION TO MOTORIZED HANDICAP DOOR CONTROLLER. COORDINATE EXACT LOCATION AND ELECTRICAL REQUIREMENTS WITH DOOR HARDWARE PRIOR TO ROUGH-IN.
12. PROVIDE JUNCTION BOX ABOVE CEILING FOR ELECTRICAL CONNECTIONS TO CARD READER DOOR CONTROLLERS. DOOR LOCKS SHALL RELEASE UPON ACTIVATION OF THE FIRE ALARM SYSTEM. CARD READERS TO BE INSTALLED BY OTHERS.
13. PROVIDE JUNCTION BOX ABOVE CEILING FOR ELECTRICAL CONNECTIONS TO ELECTRIC DOOR STRIKE HARDWARE. DOOR HARDWARE TO BE INSTALLED BY OTHERS.

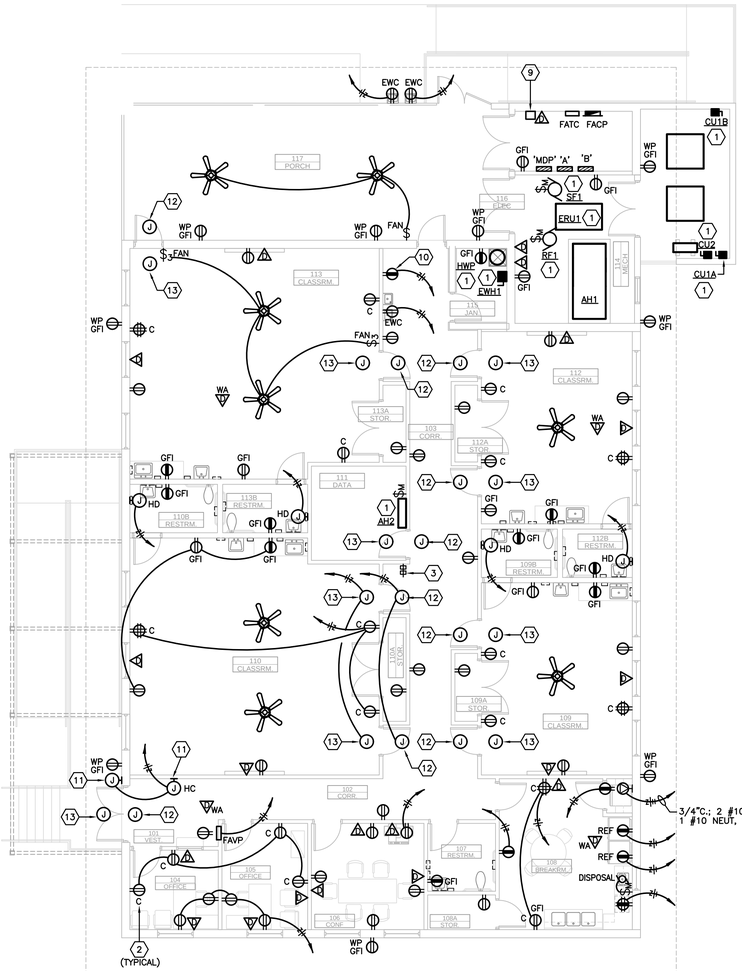

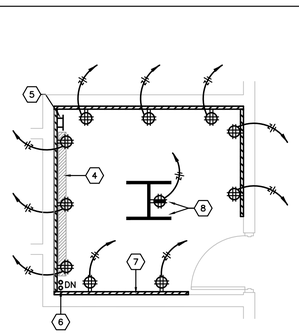

DATA ROOM - POWER AND COMMUNICATIONS PLAN
1/4" = 1'-0"
A10

POWER AND COMMUNICATIONS PLAN
1/8" = 1'-0"
A1

1315 E. SEVENTH AVENUE
SUITE 106
TAMPA, FLORIDA 33605.3607

TELEPHONE 813.242.6677
FACSIMILE 813.242.6683

wilderarchitecture.com

AA26000655

WILDERARCHITECTURE, INC.

AGI
Anston-Greenlees, Inc.
Mechanical & Electrical Consulting Engineers
1315 West Fletcher Avenue, Tampa, FL 33612 Tel(813)963-1919
Email: AGI@agiengineers.com HTTP://www.agiengineers.com
Florida Engineering Business Number 6093

NOT FOR CONSTRUCTION

ROBERT C. ANSTON, P.E. 40855

TO THE BEST OF MY KNOWLEDGE, THESE DRAWINGS AND THE PROJECT MANUAL ARE COMPLETE AND COMPLY WITH THE 2017 FLORIDA BUILDING CODE

THIS ITEM HAS BEEN ELECTRONICALLY SIGNED AND SEALED ON THE DATE/TIME STAMP SHOWN USING A DIGITAL SIGNATURE. PRINTED COPIES OF THIS DOCUMENT ARE NOT CONSIDERED SIGNED AND SEALED AND THE SIGNATURE MUST BE VERIFIED ON ANY ELECTRONIC COPIES.

HILLSBOROUGH COUNTY BOARD
OF COUNTY COMMISSIONERS
COUNTY CENTER
601 E KENNEDY BLVD
TAMPA, FL 33601

HILLSBOROUGH COUNTY
NORTHWEST AREA HEAD START

PROJECT #: 2010-00

DISTRIBUTION	DATE
DESIGN DEVELOPMENT	06.11.2020
90% CONST DOCS	08.19.2020

POWER AND COMMUNICATIONS PLAN

E2.1

Drawing File: i:\20xxx\20033.001\20033x21.dwg E21
Plotted by: Andrew Aug 17, 2020 - 2:02pm

CONDUCTOR LEGEND

A – INITIATION DEVICE LOOP – MINIMUM #18 TWISTED SHIELDED PAIR.

B – STROBE CIRCUIT – YELLOW & PURPLE CONDUCTORS THHN MINIMUM #14 AWG. PROVIDE #12 OR HIGHER WHERE REQUIRED FOR VOLTAGE DROP.

C – SPEAKER CIRCUIT – ORANGE & BROWN CONDUCTORS THHN MINIMUM #14 AWG. PROVIDE #12 OR HIGHER WHERE REQUIRED FOR VOLTAGE DROP.

D – AUXILIARY CONTROL CIRCUIT – BLACK & WHITE CONDUCTORS THHN MINIMUM #14 AWG. PROVIDE #12 OF HIGHER WHERE REQUIRED FOR VOLTAGE DROP. * QUANTITY OF AUXILIARY CONTROL CIRCUITS TO BE DETERMINED BASED UPON CONTROLS

FIRE ALARM GENERAL NOTES:

1. ALL FIRE ALARM CIRCUITS SHALL BE IN CONDUIT SIZED IN ACCORDANCE WITH NEC. ALL CONDUIT SHALL BE CONCEALED WHERE EVER POSSIBLE. PROVIDE SURFACE MOUNTED WIREMOLD WHERE RACEWAY IS REQUIRED TO BE SURFACE MOUNTED. CONDUIT SIZES SHOWN ARE MINIMUM. PROVIDE REQUIRED CONDUIT FOR NUMBER OF CONDUCTORS REQUIRED.
2. INDICATING APPLIANCE SIGNAL CIRCUITS SHALL BE A MINIMUM #12 AWG STRANDED COPPER, NPLFP TYPE, PER NEC. ALARM INITIATING CIRCUITS SHALL BE A MINIMUM #18 AWG STRANDED COPPER, NPLFP TYPE, PER NEC.
3. QUANTITIES OF CONDUCTORS AND CIRCUITING INDICATED IS BASED ON A SPECIFIC SYSTEM AND MAY BE DIFFERENT DEPENDING ON THE MANUFACTURER UTILIZED. CONTRACTOR IS TO PROVIDE ALL NECESSARY CIRCUITS, WIRE AND CONDUIT TO ACCOMPLISH THE FUNCTIONS INDICATED HERE, ON THE FLOOR PLANS AND IN THE SPECIFICATIONS.
4. SEE FLOOR PLANS FOR ADDITIONAL DEVICES REQUIRED WHICH MAY NOT BE INDICATED ON THE RISER DIAGRAM.
5. FIRE ALARM CIRCUITS SHALL NOT BE SPLICED INSIDE MANHOLES OR ANYWHERE BELOW GRADE.
6. ALL SPLICES OF HOME RUN CIRCUITING SHALL BE TERMINATED IN FIRE ALARM TERMINAL CABINETS. ALL LOW VOLTAGE SURGE SUPPRESSION DEVICES SHALL BE INSTALLED INSIDE FIRE ALARM TERMINAL CABINETS.
7. SEE SPECIFICATIONS FOR ADDITIONAL REQUIREMENTS

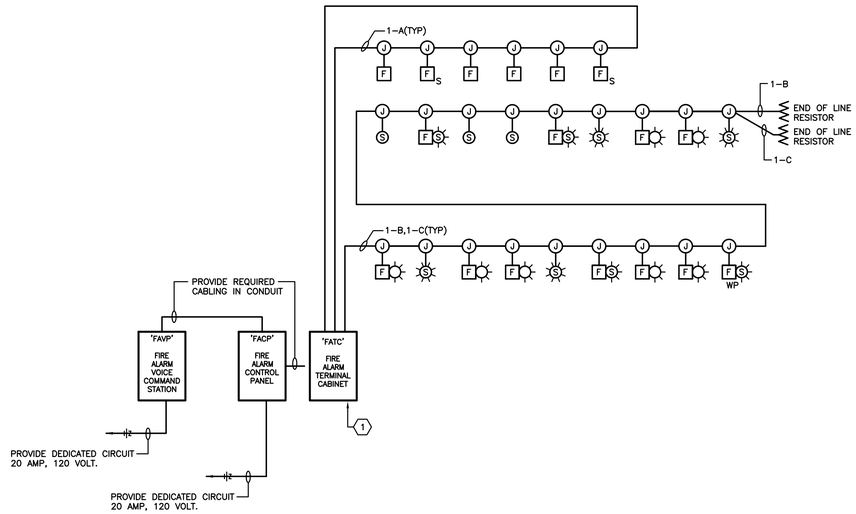

FIRE ALARM SYSTEM RISER DIAGRAM

NOT TO SCALE

DRAWING NOTES

1. PROVIDE LOW VOLTAGE SURGE SUPPRESSION DEVICES INSIDE FATC. ALL WIRING SHALL BE TERMINATED ON TERMINAL STRIP. NO WIRE NUTS INSIDE FATC.

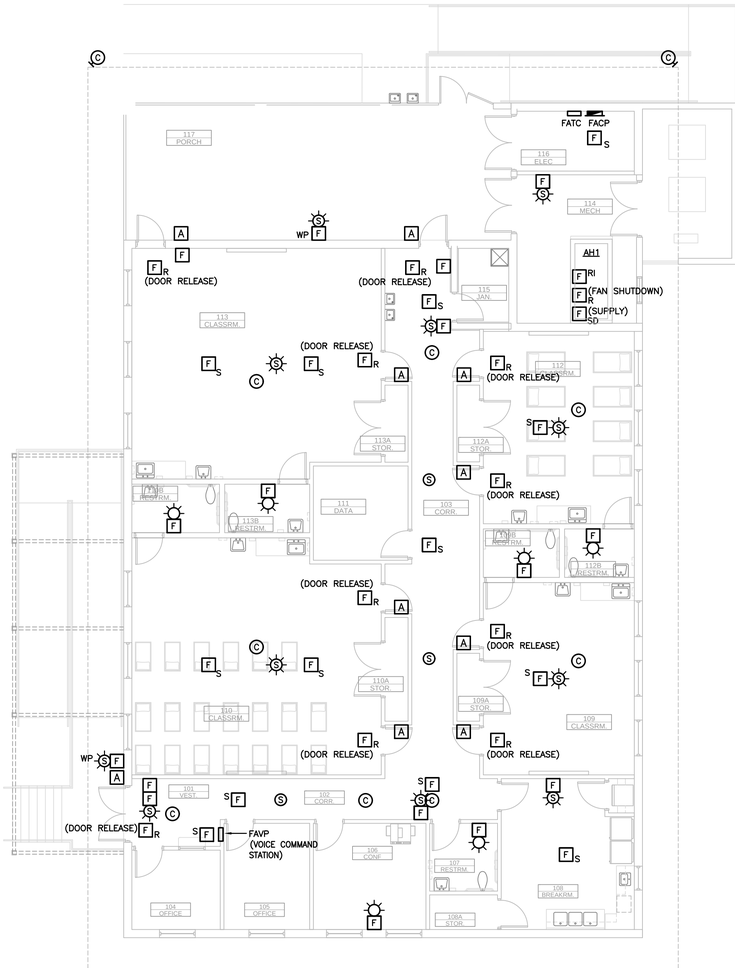

FIRE ALARM AND SYSTEMS PLAN

1/8" = 1'-0"

1315 E. SEVENTH AVENUE
SUITE 106
TAMPA, FLORIDA 33605.3607

TELEPHONE 813.242.6677
FACSIMILE 813.242.6683

wilderarchitecture.com

AA26000655

WILDERARCHITECTURE, INC.

AGI
Anston-Greenlees, Inc.
Mechanical & Electrical Consulting Engineers
1315 West Fletcher Avenue, Tampa, FL 33612 Tel(813)963-1919
Email: AGI@agi-engineers.com HTTP://www.agi-engineers.com
Florida Engineering Business Number 6093

NOT FOR CONSTRUCTION

ROBERT C. ANSTON, P.E. 40855

TO THE BEST OF MY KNOWLEDGE, THESE DRAWINGS AND THE PROJECT MANUAL ARE COMPLETE AND COMPLY WITH THE 2017 FLORIDA BUILDING CODE

THIS ITEM HAS BEEN ELECTRONICALLY SIGNED AND SEALED ON THE DATE/TIME STAMP SHOWN USING A DIGITAL SIGNATURE. PRINTED COPIES OF THIS DOCUMENT ARE NOT CONSIDERED SIGNED AND SEALED AND THE SIGNATURE MUST BE VERIFIED ON ANY ELECTRONIC COPIES.

HILLSBOROUGH COUNTY BOARD
OF COUNTY COMMISSIONERS
COUNTY CENTER
601 E KENNEDY BLVD
TAMPA, FL 33601

HILLSBOROUGH COUNTY
NORTHWEST AREA HEAD START

PROJECT #: 2010-00	
DISTRIBUTION	DATE
DESIGN DEVELOPMENT	06.11.2020
90% CONST DOCS	08.19.2020

FIRE ALARM AND SYSTEMS PLAN

E3.1

FIRE ALARM RISER DIAGRAM | NOT TO SCALE | A8

FIRE ALARM AND SYSTEMS PLAN | 1/8" = 1'-0" | A1

Drawing File: I:\20xxx\20033.001\20033e31.dwg E31
Plotted by: Andrew Aug 17, 2020 - 2:02pm

GENERAL NOTES:

1. PROVIDE A 55" LED FLAT SCREEN MONITOR AND PROVIDE FOR THE DISPLAY OF THE SOLAR PV SYSTEM OPERATIONAL DATA, MOUNTED AT NOT LOWER THAN 5'-0" TO THE BOTTOM OF THE DISPLAY. REFER TO SPECIFICATIONS. PROVIDE REQUIRED MOUNTING BRACKET. PROVIDE 120 VOLT, 20 AMP, DUPLEX RECEPTACLE MOUNTED BEHIND THE DISPLAY. PROVIDE ALL REQUIRED COMMUNICATIONS CABLING, GATEWAY, AND OTHER NETWORK COMMUNICATIONS EQUIPMENT AND DEVICES. POWER AND COMMUNICATIONS CABLING SHALL BE INSTALLED IN SURFACE MOUNTED TWO COMPARTMENT RACEWAY, WIREMOLD OR EQUAL (NO EXPOSED EMT OR OTHER CONDUIT TYPE). SEE POWER PLAN ON THIS SHEET FOR PROPOSED LOCATION. FIELD VERIFY LOCATION WITH OWNER PRIOR TO ROUGH IN.

DRAWING NOTES:

(1) WIRING FROM THE MODULES TO THE INVERTER(S) SHALL BE INSTALLED IN RACEWAYS. PROVIDE RACEWAYS AS REQUIRED FOR FEEDERS TO INDIVIDUAL INVERTERS. RACEWAYS SHALL BE ROUTED ACROSS THE ROOF OR ROUTED DOWN TO GROUND LEVEL AND ROUTED UNDERGROUND. RACEWAY ROUTING ON THE ROOF, INCLUDING THE MEANS TO SUPPORT AND FASTEN, SHALL BE APPROVED BY THE ARCHITECT. ROUTING SHOWN ARE SUGGESTED POSSIBILITIES ONLY. IT IS THE CONTRACTORS RESPONSIBILITY TO REVIEW ROUTING AND DETERMINE THE FINAL EXACT ROUTE AND INCLUDE IN THE BID PRICING.

(2) REFER TO ARCHITECTURAL AND ROOFING DRAWINGS AND SPECIFICATIONS FOR ANY AND ALL ROOF WORK REQUIREMENTS. ENGINEERING SHOP DRAWINGS SHALL PROVIDE MOUNTING AND RACKING DETAILS INCLUDE TILT AND ORIENTATION INFORMATION. PROVIDE FOR ALL REQUIRED EXPANSION JOINT GAPS, SETBACKS, ACCESS, AND CLEARANCES.

(3) THE DESIGN CRITERIA BASIS IS A 340 WATT MODULE. OTHER MODULES ARE PERMITTED AS LONG AS THEY MEET THE REQUIREMENTS OF THE SPECIFICATIONS, FIT ON THE ROOF, AND PROVIDE THE REQUIRED KW POWER PRODUCTION.

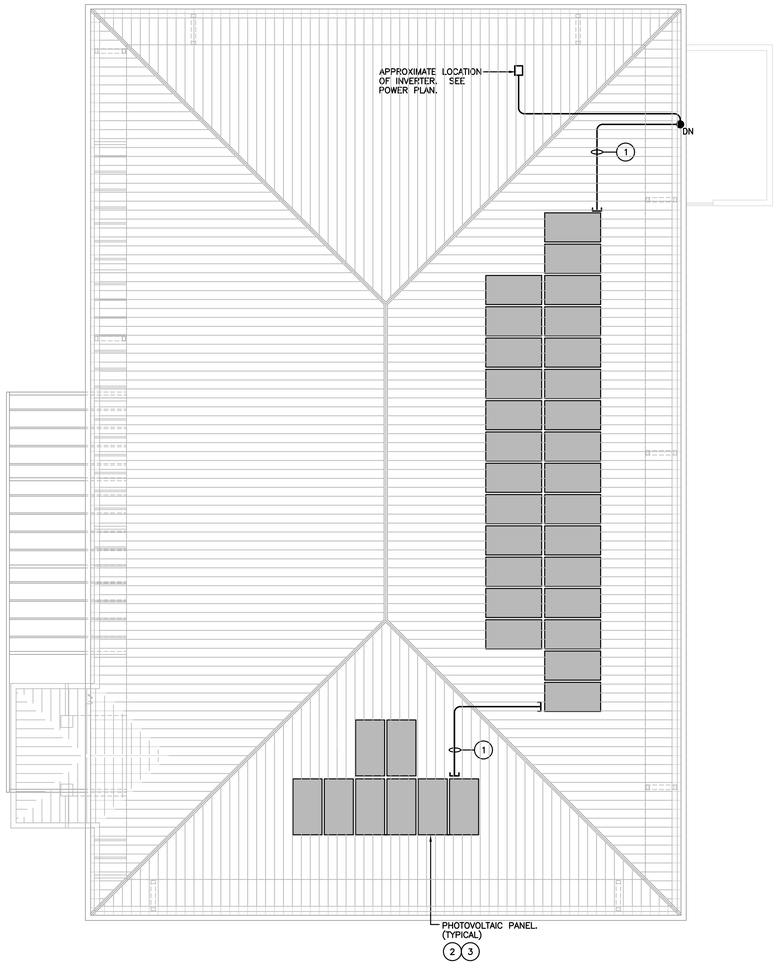

PV SOLAR SYSTEM - ELECTRICAL ROOF PLAN
1/8" = 1'-0"

A1

1315 E. SEVENTH AVENUE
SUITE 106
TAMPA, FLORIDA 33605.3607

TELEPHONE 813.242.6677
FACSIMILE 813.242.6683

wilderarchitecture.com

AA26000655

WILDERARCHITECTURE, INC.

AGI
Anston-Greenlees, Inc.
Mechanical & Electrical Consulting Engineers
1315 West Fletcher Avenue, Tampa, FL 33612 Tel(813)963-1919
Email: AGI@agi-engineers.com HTTP://www.agi-engineers.com
Florida Engineering Business Number 6093

NOT FOR CONSTRUCTION

ROBERT C. ANSTON, P.E. 40855

TO THE BEST OF MY KNOWLEDGE, THESE DRAWINGS AND THE PROJECT MANUAL ARE COMPLETE AND COMPLY WITH THE 2017 FLORIDA BUILDING CODE

THIS ITEM HAS BEEN ELECTRONICALLY SIGNED AND SEALED ON THE DATE/TIME STAMP SHOWN USING A DIGITAL SIGNATURE. PRINTED COPIES OF THIS DOCUMENT ARE NOT CONSIDERED SIGNED AND SEALED AND THE SIGNATURE MUST BE VERIFIED ON ANY ELECTRONIC COPIES.

HILLSBOROUGH COUNTY BOARD
OF COUNTY COMMISSIONERS
COUNTY CENTER
601 E KENNEDY BLVD
TAMPA, FL 33601

HILLSBOROUGH COUNTY
NORTHWEST AREA HEAD START

PROJECT #: 2010-00	
DISTRIBUTION	DATE
DESIGN DEVELOPMENT	06.11.2020
90% CONST DOCS	08.19.2020

PV SOLAR SYSTEM
ELECTRICAL ROOF
PLAN

E4.1

Drawing File: I:\20xxx\20033.001\20033e41.dwg E41
Plotted by: Andrew Aug 17, 2020 - 2:02pm

MECHANICAL EQUIPMENT CONNECTION SCHEDULE

MARK	VOLTAGE/PHASE	KW HEAT	HP	FLA	MCA	BREAKER	HOMERUN CIRCUIT	CONDUIT & CABLING	COMBINATION STARTER/DISCONNECT SWITCH					INTERLOCK/ REMARKS
									SIZE AMPS	POLES	FUSE	STARTER SIZE	NEMA RATING	
AIR HANDLERS														
AH1	208/3	–	5.0	15.7	19.6	35	–	3/4"C.; WITH 3–#8, 1–#10 EG	VFD	–	DIV23	–	–	NOTES #1
CONDENSING UNITS														
CU1A–OA	208/3	–	–	26.4	33.0	45	–	3/4"C.; WITH 3–#6, 1–#10 EG	60	3	MFS	–	3R	NOTES #1
CU1B–RA	208/3	–	–	16.8	21.0	35	–	3/4"C.; WITH 3–#8, 1–#10 EG	60	3	MFS	–	3R	NOTES #1
MINI–SPLIT UNITS														
AH2/CU2	208/1	–	–	6.4	8.0	15	–	3/4"C; WITH 2–#10, 1–#10 EG	30	2	NF	N/A	3R	NOTES #1,2,5
VAV BOXES														
VAV01	120/1	1.0	–	8.3	10.4	20	–	3/4"C.; WITH 2–#12, 1–#12 EG	–	–	–	–	–	NOTES #1,2
VAV02	120/1	1.0	–	8.3	10.4	20	–	3/4"C.; WITH 2–#12, 1–#12 EG	–	–	–	–	–	NOTES #1,2
VAV03	120/1	1.0	–	8.3	10.4	20	–	3/4"C.; WITH 2–#12, 1–#12 EG	–	–	–	–	–	NOTES #1,2
VAV04	120/1	1.0	–	8.3	10.4	20	–	3/4"C.; WITH 2–#12, 1–#12 EG	–	–	–	–	–	NOTES #1,2
VAV05	120/1	2.5	–	20.8	26.1	30	–	3/4"C.; WITH 2–#10, 1–#10 EG	–	–	–	–	–	NOTES #1,2
VAV06	208/3	6.0	–	16.7	20.8	25	–	3/4"C.; WITH 3–#10, 1–#10 EG	–	–	–	–	–	NOTES #1,2
VAV07	120/1	2.5	–	20.8	26.1	30	–	3/4"C.; WITH 2–#10, 1–#10 EG	–	–	–	–	–	NOTES #1,2
VAV08	208/3	5.5	–	15.3	19.1	20	–	3/4"C.; WITH 3–#12, 1–#12 EG	–	–	–	–	–	NOTES #1,2
FANS														
SF1	208/1	–	1.0	–	–	20	–	–	–	–	–	–	–	–
RF1	208/1	–	1.0	8.8	11.0	20	–	–	–	–	–	–	–	–
ELECTRIC WATER HEATERS														
EWH1	208/3	6.0	–	25.0	31.3	35	–	3/4"C.; WITH 3–#8, 1–#10 EG	60	3	MFS	–	1	NOTES #1
HWP	120/1	–	1/25	0.1	0.2	20	–	3/4"C.; WITH 2–#12, 1–#12 EG	DIV23	DIV23	–	–	–	NOTES #1

MFS = MANUFACTURER'S RECOMMENDED FUSE SIZE
MRS = MOTOR RATED TOGGLE SWITCH BY DIVISION 26
VFD = VARIABLE FREQUENCY DRIVE (BY DIVISION 23) INSTALLED BY DIVISION 26

NF = NON–FUSED
DIV23 = DISCONNECTING MEANS PROVIDED BY THE MANUFACTURER OR DIVISION 23 CONTRACTOR

NOTES:

1. VERIFY MANUFACTURER'S RECOMMENDED OVERCURRENT PROTECTION DEVICE SIZE AND PROVIDE CIRCUIT AND BREAKER/FUSES SIZED ACCORDINGLY.
2. ELECTRICAL CONTRACTOR SHALL MAKE ELECTRICAL CONNECTIONS TO NEW VAV BOX AS NOTED. DIVISION 23 CONTRACTOR SHALL FURNISH AND INSTALL BOX WITH INTEGRAL DISCONNECT.
3. INDOOR UNIT IS POWERED FROM OUTDOOR UNIT. PROVIDE MOTOR RATED TOGGLE TYPE DISCONNECT AT INDOOR UNIT TO SERVE AS LOCAL DISCONNECT. SEE DETAIL.

1315 E. SEVENTH AVENUE
SUITE 106
TAMPA, FLORIDA 33605.3607

TELEPHONE 813.242.6677
FACSIMILE 813.242.6683

wilderarchitecture.com

AA26000655

WILDERARCHITECTURE, INC.

AGI
Anston-Greenlees, Inc.
Mechanical & Electrical Consulting Engineers
1315 West Fletcher Avenue, Tampa, FL 33612 Tel(813)963-1919
Email: AGI@agi-engineers.com HTTP://www.agi-engineers.com
Florida Engineering Business Number 6093

NOT FOR CONSTRUCTION

ROBERT C. ANSTON, P.E. 40858
TO THE BEST OF MY KNOWLEDGE, THESE DRAWINGS AND THE PROJECT MANUAL ARE COMPLETE AND COMPLY WITH THE 2017 FLORIDA BUILDING CODE

THIS ITEM HAS BEEN ELECTRONICALLY SIGNED AND SEALED ON THE DATE/TIME STAMP SHOWN USING A DIGITAL SIGNATURE. PRINTED COPIES OF THIS DOCUMENT ARE NOT CONSIDERED SIGNED AND SEALED AND THE SIGNATURE MUST BE VERIFIED ON ANY ELECTRONIC COPIES.

HILLSBOROUGH COUNTY BOARD
OF COUNTY COMMISSIONERS
COUNTY CENTER
601 E KENNEDY BLVD
TAMPA, FL 33601

HILLSBOROUGH COUNTY
NORTHWEST AREA HEAD START

PROJECT #: 2010-00

DISTRIBUTION	DATE
DESIGN DEVELOPMENT	06.11.2020
90% CONST DOCS	08.19.2020

ELECTRICAL
SCHEDULES

E5.1

Drawing File: I:\20xxA\20033.001\2003351-dwg E51
Plotted by: Andrew Aug 17, 2020 - 2:02pm

FEEDER SCHEDULE

AMPS	CONDUIT & CABLING
40A	1"C; 3-#8, 1-#8 NEUTRAL, 1-#10 GROUND
150A	2"C; 3-#1/0, 1-#1/0 NEUTRAL, 1-#6 GROUND
200A	2"C; 3-#3/0, 1-#3/0 NEUTRAL, 1-#6 GROUND
400A	TWO(2) 2"C; EACH WITH 3-#3/0, 1-#3/0 NEUTRAL, 1-#3 GROUND
400B	TWO(2) 2"C; EACH WITH 3-#3/0, 1-#3/0 NEUTRAL

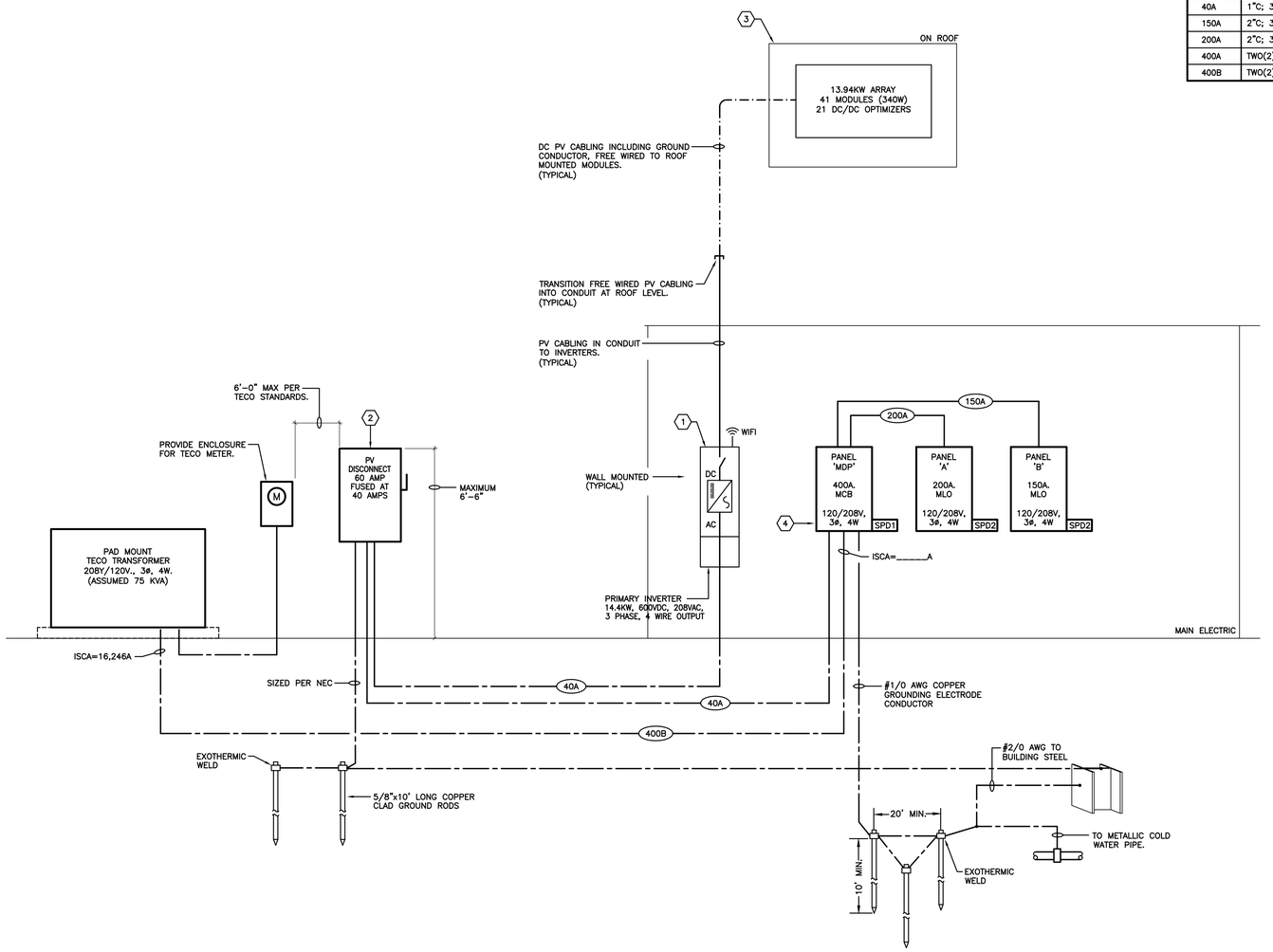

ELECTRICAL POWER RISER DIAGRAM
NOT TO SCALE

GENERAL NOTES:

1. FULLY ENGINEERED SHOP DRAWINGS SHALL INCLUDE MAXIMUM CIRCUIT CURRENT CALCULATIONS, AND ALL CIRCUIT CONDUCTOR (DC AND AC) AND RACEWAY SIZING.
2. FULLY ENGINEERED SHOP DRAWINGS SHALL INCLUDE VOLTAGE DROP CALCULATIONS AND FAULT CURRENT CALCULATIONS.
3. FULLY ENGINEERED SHOP DRAWINGS SHALL INCLUDE MODULE SPECIFICATIONS AND CALCULATIONS.
4. FULLY ENGINEERED SHOP DRAWINGS SHALL INCLUDE INVERTER SPECIFICATIONS AND CALCULATIONS TO INDICATE INVERTER INPUT AND OUTPUT CURRENT, KW, AND VOLTAGE RATINGS AND ACTUAL MAXIMUM POWER INPUT AND OUTPUT BASED UPON THE MODULES/OPTIMIZERS UTILIZED

DRAWING NOTES:

(1) PROVIDE REQUIRED INVERTERS PER SPECIFICATIONS. PROVIDE A MINIMUM 13.94 KW, 208 VOLT OUTPUT, 40 AMP AC, 1000 VOLT DC RATED, WITH INTEGRAL DC DISCONNECT. PROVIDE AS PRIMARY/SECONDARY OR MASTER/SLAVE AS NECESSARY FOR THE RATED KW WITH SOLAR PV FACTORY/MANUFACTURER PROVIDED INTEGRAL CABLING. INVERTER SHALL BE PROVIDED WITH AUTOMATIC POWER SHUT-DOWN AND DISCONNECT FROM THE POWER GRID IN THE EVENT OF ANY UTILITY (TAMPA ELECTRIC) OUTAGE.

(2) PROVIDE REQUIRED PV DISCONNECT PER NEC AND TAMPA ELECTRIC REQUIREMENTS. 600 VOLT RATED, 3 PHASE, 4 WIRE, WITH GROUND BAR, 600 AMP, FUSIBLE WITH 40 AMP FUSES (RK5 TYPE). PROVIDE SERVICE ENTRANCE RATED SWITCH AND BOND NEUTRAL AND GROUND BAR WITH REMOVABLE BONDING JUMPER. NEMA 3R WITH POSITIVE ON/OFF INDICATION VISIBLE ON THE OUTSIDE OF THE ENCLOSURE.

(3) PROVIDE REQUIRED ROOF MOUNTED PV ARRAYS, MODULES, AND OPTIMIZERS PER SPECIFICATIONS IN ORDER TO PROVIDE FOR A MINIMUM OF 13.94 KW(AC).

(4) PROVIDE 40 AMP, 3 POLE BREAKER FOR CONNECTION OF PV GENERATED POWER TO PANEL 'MDP'. BREAKER SHALL BE NOTED FOR REVERSE FEED (BACK-FEED) AND SHALL NOT BE LABELED "LINE" OR "LOAD". BREAKER SHALL BE LOCATED I PANEL AT COMPLETELY OPPOSITE END OF BUS FROM MAIN BREAKER.

1315 E. SEVENTH AVENUE
SUITE 106
TAMPA, FLORIDA 33605.3607

TELEPHONE 813.242.6677
FACSIMILE 813.242.6683

wilderarchitecture.com

AA26000655

WILDERARCHITECTURE, INC.

AGI
Anston-Greenlees, Inc.
Mechanical & Electrical Consulting Engineers
1315 West Fletcher Avenue, Tampa, FL 33612 Tel(813)963-1919
Email: AGI@agi-engineers.com HTTP://www.agi-engineers.com
Florida Engineering Business Number 6093

NOT FOR CONSTRUCTION

ROBERT C. ANSTON, P.E. 40855

TO THE BEST OF MY KNOWLEDGE, THESE DRAWINGS AND THE PROJECT MANUAL ARE COMPLETE AND COMPLY WITH THE 2017 FLORIDA BUILDING CODE

THIS ITEM HAS BEEN ELECTRONICALLY SIGNED AND SEALED ON THE DATE/TIME STAMP SHOWN USING A DIGITAL SIGNATURE. PRINTED COPIES OF THIS DOCUMENT ARE NOT CONSIDERED SIGNED AND SEALED AND THE SIGNATURE MUST BE VERIFIED ON ANY ELECTRONIC COPIES.

HILLSBOROUGH COUNTY BOARD
OF COUNTY COMMISSIONERS
COUNTY CENTER
601 E KENNEDY BLVD
TAMPA, FL 33601

HILLSBOROUGH COUNTY
NORTHWEST AREA HEAD START

PROJECT #: 2010-00	
DISTRIBUTION	DATE
DESIGN DEVELOPMENT	06.11.2020
90% CONST DOCS	08.19.2020

ELECTRICAL RISER DIAGRAM

E6.1

Drawing File: I:\20xxx\20033.001\20033e61.dwg E61
Plotted by: Andrew Aug 17, 2020 - 2:02pm

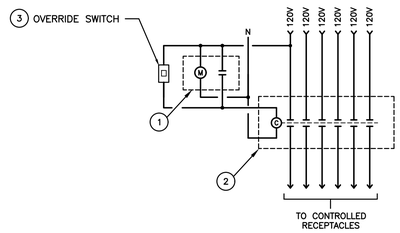

CONTROLLED RECEPTACLE CONTACTOR WIRING DIAGRAM

NOT TO SCALE

DIAGRAM NOTES:

1. 7-DAY, ASTRONOMICAL DIGITAL TIME CLOCK FOR EXTERIOR LIGHTING. 120V, SINGLE POLE, DOUBLE THROW WITH BATTERY BACKUP. TORK EWZ201 WITH MOMENTARY OPTION OR APPROVED EQUIVALENT. CIRCUIT TIME CLOCK MOTOR TO ON THE UNSWITCHED LEG OF THE LIGHTING CIRCUIT.
2. ELECTRICALLY OPERATED, MECHANICALLY HELD LIGHTING CONTACTOR FOR LIGHTING CONTROL, 20A, 240V. RATED CONTACTS, 6 POLE, WITH A 120V, COIL, NEMA 1 ENCLOSURE, WITH CONTROL MODULE FOR CONTROL FROM THE TIME CLOCK GE #CR360ML2 TYPE OR EQUAL.
3. THE "OVERRIDE" SWITCH WILL OVERRIDE THE TIMECLOCK AFTER HOURS AND ALLOW POWER TO CONTROLLED RECEPTACLES FOR A MAXIMUM PERIOD OF 2 HOURS. AFTER 2 HOURS, NORMAL OPERATION VIA TIMECLOCK SHALL RESUME UNLESS ANOTHER OPERATION OF THE OVERRIDE SWITCH OCCURS. TORK MODEL SS423 (WITH OPTIONAL BEEPER WARNING) OR APPROVED EQUAL.

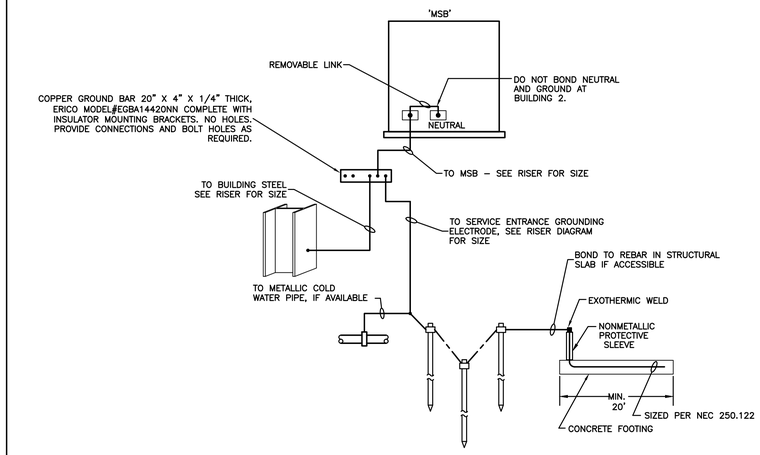

SERVICE ENTRANCE GROUNDING DETAIL

NOT TO SCALE

System No. W-L-1001

June 15, 2005

F Ratings 1, 2, 3 and 4 Hr (See Items 2 and 3)
T Ratings 0, 1, 2, 3, and 4 Hr (See Item 3)
L Rating At Ambient less than 1 CFM/sq ft
L Rating At 400 F less than 1 CFM/sq ft

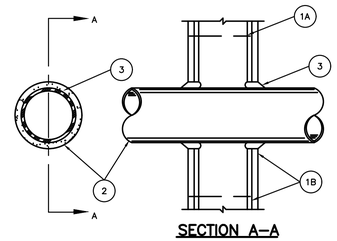

SECTION A-A

FIRE-RATED WALL PENETRATION DETAIL FOR PIPE OR CONDUIT

NOT TO SCALE

1. Wall Assembly The 1, 2, 3 or 4 hr fire-rated gypsum wallboard/stud wall assembly shall be constructed of the materials and in the manner described in the individual U300 or U400 Series Wall or Partition Designs in the UL Fire Resistance Directory and shall include the following construction features:

   A. Studs Wall framing may consist of either wood studs (max 2 h fire rated assemblies) or steel channel studs. Wood studs to consist of nom 2 by 4 in. (51 by 102 mm) lumber spaced 16 in. (406 mm) OC with nom 2 by 4 in. (51 by 102 mm) lumber end plates and cross braces. Steel studs to be min 3-5/8 in. (92 mm) wide by 1-3/8 in. (35 mm) deep channels spaced max 24 in. (610 mm) OC.

   B. Gypsum Board* Nom 1/2 or 5/8 in. (13 or 16 mm) thick, 4 ft. (122 cm) wide with square or tapered edges. The gypsum wallboard type, thickness, number of layers, fastener type and sheet orientation shall be as specified in the individual U300 or U400 Series Design in the UL Fire Resistance Directory. Max diam of opening is 26 in. (660 mm).

2. Through-Penetrant One metallic pipe, conduit or tubing installed either concentrically or eccentrically within the firestop system. The annular space between pipe, conduit or tubing and periphery of opening shall be min of 0 in / (0 mm). (point contact) to max 2 in. (51 mm) Pipe, conduit or tubing to be rigidly supported on both sides of wall assembly. The following types and sizes of metallic pipes, conduits or tubing may be used:

   A. Steel Pipe Nom 24 in. (610 mm) diam (or smaller) Schedule 10 (or heavier) steel pipe.

   B. Iron Pipe Nom 24 in. (610 mm) diam (or smaller) service weight (or heavier) cast iron soil pipe, nom 12 in (305 mm) diam (or smaller) or Class 50 (or heavier) ductile iron pressure pipe.

   C. Conduit Nom 6 in. (152 mm) diam (or smaller) steel conduit or nom 4 in (102 mm) diam (or smaller) steel electrical metallic tubing

   D. Copper Tubing Nom 6 in. (152 mm) diam (or smaller) Type L (or heavier) copper tubing

   E. Copper Pipe Nom 6 in. (152 mm) diam (or smaller) Regular (or heavier) copper pipe.

   F. Through Penetrating Product* Flexible Metal Piping The following types of steel flexible metal gas piping may be used:

      1. Nom 2 in. (51 mm) diam (or smaller) steel flexible metal gas piping. Plastic covering on piping may or may not be removed on both sides of floor or wall assembly.

         OMEGA FLEX INC

      2. Nom 1 in. (25 mm) diam (or smaller) steel flexible metal gas piping. Plastic covering on piping may or may not be removed on both sides of floor or wall assembly.

         GASTITE, DIV OF TITEFLEX

      3. Nom 1 in. (25 mm) diam (or smaller) steel flexible metal gas piping. Plastic covering on piping may or may not be removed on both sides of floor or wall assembly.

         WARD MFG L L C

3. Fill, Void or Cavity Material* Caulk or Sealant Min 5/8. , 1-1/4,1-7/8 and 2-1/2 in. (16, 32, 48 and 64 mm) thickness of caulk for 1, 2, 3 and 4 hr rated assemblies, respectively, applied within annulus, flush with both surfaces of wall. Min 1/4 in. (6 mm) diam bead of caulk applied to gypsum board/penetrant interface at point contact location on both sides of wall. The hourly F Rating of the firestop system is dependent upon the hourly fire rating of the wall assembly in which it is installed, as shown in the following table. The hourly T Rating of the firestop system is dependent upon the type or size of the pipe or conduit and the hourly fire rating of the wall assembly in which it is installed, as tabulated below:

Max Pipe or Conduit Diam. In (mm)	F Rating Hr	T Rating Hr
1 (25)	1 or 2	0+, 1 or 2
1 (25)	3 or 4	3 or 4
4 (102)	1 or 2	0
6 (152)	3 or 4	0
12 (305)	1 or 2	0

+When copper pipe is used, T Rating is 0 h.

3M COMPANY CP 25WB+ or FB-3000 WT.

* Indicates such products shall bear the UL or cUL Certification Mark for jurisdictions employing the UL or cUL Certification (such as Canada), respectively.

Last Updated on 2005-06-15

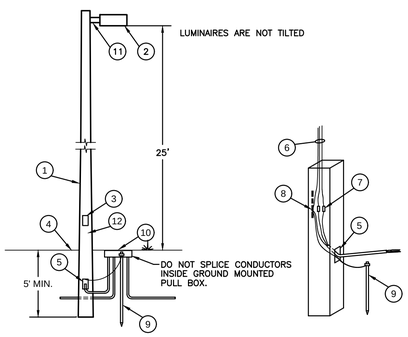

TYPICAL SITE LIGHTING LUMINAIRE CONCRETE DIRECT BURIAL POLE DETAIL

NOT TO SCALE

POLE DETAIL NOTES:

1. PROVIDE A MINIMUM 30' SQUARE TAPERED DIRECT BURIAL CONCRETE POLE THE POLE, COMPLETE WITH MOUNTING DEVICE AND LUMINARIES IN PLACE, SHALL BE CAPABLE OF WITHSTANDING THE FOLLOWING: ULTIMATE WIND SPEED AS SPECIFIED IN THE 2014 FLORIDA BUILDING CODE. FLORIDA BUILDING CODE.
2. PROVIDE REQUIRED BRACKET ARM AND MOUNTING ACCESSORIES COMPATIBLE WITH POLE DESIGN, WITH STRENGTH ADEQUATE FOR WIND SPEED AS SPECIFIED IN THE FLORIDA BUILDING CODE.
3. PROVIDE OVERSIZED HANDHOLE IN POLE WITH METAL COVER ATTACHED WITH STAINLESS STEEL MACHINE SCREWS, MINIMUM 4"x4"x2-1/8" DEEP. MAKE CIRCUIT SPLICES IN THIS HANDHOLE.
4. BACKFILL IN ACCORDANCE WITH STANDARD SPECIFICATIONS FOR FLORIDA DEPARTMENT OF TRANSPORTATION ROAD CONSTRUCTION, AS REQUIRED FOR THE WIND SPEED AS SPECIFIED IN THE FLORIDA BUILDING CODE.
5. WIRE ENTRY BELOW GRADE. NO SPLICES ALLOWED BELOW GRADE.
6. SEE SITE PLAN FOR CIRCUIT REQUIREMENTS.
7. 10 AMP FNQ SLOW BLOW FUSE.
8. POLE SHALL BE PROVIDED WITH FACTORY EQUIPPED GROUNDING STUD. BOND GROUND WIRES INSIDE HANDHOLE AND SECURELY BOND GROUND WIRES TO A CONTINUOUS STEEL BAR IN THE POLE VIA GROUNDING STUD.
9. PROVIDE 5/8" DIA. X 10'-0" COPPER GROUND ROD AT EACH POLE. PROVIDE #10 AWG, CU BARE GROUND WIRE FROM EACH LUMINAIRE AND BONDED TO GROUND ROD. (TYP.)
10. HAND HOLE AT GRADE WITH TRAFFIC RATED STEEL COVER (IF NECESSARY). PROVIDE HAND HOLE FOR EASE OF PULLING CONDUCTORS ONLY. HAND HOLE SHALL NOT BE USED FOR SPLICES. NO SPLICES ALLOWED AT OR BELOW GRADE.
11. PROVIDE GROUND WIRE ATTACHED TO GROUND LUG OR THROUGH BOLT ON BRACKET ARM, AND TO GROUND LUG ON LUMINAIRE.
12. PROVIDE STRUCTURAL ENGINEERING DRAWINGS CERTIFYING POLE AND POLE BASE COMPLIANCE WITH FLORIDA BUILDING CODE WIND LOAD REQUIREMENTS FOR THE ACTUAL SOIL CONDITIONS. DRAWING SHALL BE SIGNED AND SEALED BY A FLORIDA P.E..

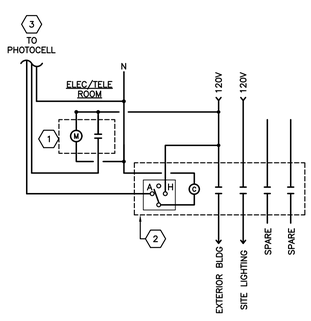

EXTERIOR LIGHTING CONTROL DIAGRAM

NOT TO SCALE

DIAGRAM NOTES:

1. 7-DAY, ASTRONOMICAL DIGITAL TIME CLOCK FOR EXTERIOR LIGHTING. 120V, SINGLE POLE, DOUBLE THROW WITH BATTERY CAPACITOR BACKUP. (INTERMATIC ET2800 SERIES), OR APPROVED EQUIVALENT. CIRCUIT TIME CLOCK MOTOR TO THE UNSWITCHED LEG OF THE LIGHTING CIRCUIT. LABEL TIMECLOCK "EXTERIOR LTG".
2. ELECTRICALLY OPERATED, ELECTRICALLY HELD LIGHTING CONTACTOR (SQUARE D #LG40) FOR LIGHTING CONTROL, 20A, 4 POLE, WITH A 120V, COIL, NEMA 1 ENCLOSURE, WITH CONTROL MODULE FOR CONTROL FROM THE TIME CLOCK.
3. PROVIDE 120 VOLT PHOTOCELL FOR OVERRIDE. MOUNT PHOTOELECTRIC CELL INCONSPICUOUSLY ON THE EXTERIOR WALL FACING NORTH. COORDINATE EXACT LOCATION AND MOUNTING IN THE FIELD FOR MAXIMUM PERFORMANCE.

EXAMPLE

PANEL 'A'
208Y/120V, 3 , 4W.
FED FROM PANEL 'MDP'
CIR-1,3,5

TYPICAL NAMEPLATE DETAIL

NOT TO SCALE

NOTES:

PROVIDE NAMEPLATE LABELS ON ALL EQUIPMENT AND PANELBOARDS. EACH NAME PLATE SHALL HAVE THE FOLLOWING INFORMATION:
1. EQUIPMENT NAME.
2. VOLTAGE AND PHASE.
3. LOCATION FROM WHICH EQUIPMENT IS BEING FED FROM. INCLUDE CIRCUIT NUMBERS.

1315 E. SEVENTH AVENUE
SUITE 106
TAMPA, FLORIDA 33605.3607

TELEPHONE 813.242.6677
FACSIMILE 813.242.6683

wilderarchitecture.com

AA26000655

WILDERARCHITECTURE, INC.

AGI
Anston-Greenlees, Inc.
Mechanical & Electrical Consulting Engineers
1315 West Fletcher Avenue, Tampa, FL 33612 Tel(813)963-1919
Email: AGI@agi-engineers.com HTTP://www.agi-engineers.com
Florida Engineering Business Number 6093

NOT FOR CONSTRUCTION

ROBERT C. ANSTON, P.E. 40856

TO THE BEST OF MY KNOWLEDGE, THESE DRAWINGS AND THE PROJECT MANUAL ARE COMPLETE AND COMPLY WITH THE 2017 FLORIDA BUILDING CODE

THIS ITEM HAS BEEN ELECTRONICALLY SIGNED AND SEALED ON THE DATE/TIME STAMP SHOWN USING A DIGITAL SIGNATURE. PRINTED COPIES OF THIS DOCUMENT ARE NOT CONSIDERED SIGNED AND SEALED AND THE SIGNATURE MUST BE VERIFIED ON ANY ELECTRONIC COPIES.

HILLSBOROUGH COUNTY BOARD
OF COUNTY COMMISSIONERS
COUNTY CENTER
601 E KENNEDY BLVD
TAMPA, FL 33601

HILLSBOROUGH COUNTY
NORTHWEST AREA HEAD START

PROJECT #: 2010-00

DISTRIBUTION	DATE
DESIGN DEVELOPMENT	06.11.2020
90% CONST DOCS	08.19.2020

ELECTRICAL DETAILS

E7.1

Drawing File: I:\20xxx\20033.001\20033e71.dwg E71
Plotted by: Andrew Aug 17, 2020 - 2:02pm