REV	DESCRIPTION OF REVISION	E.C.N.	BY	APPROVED	DATE

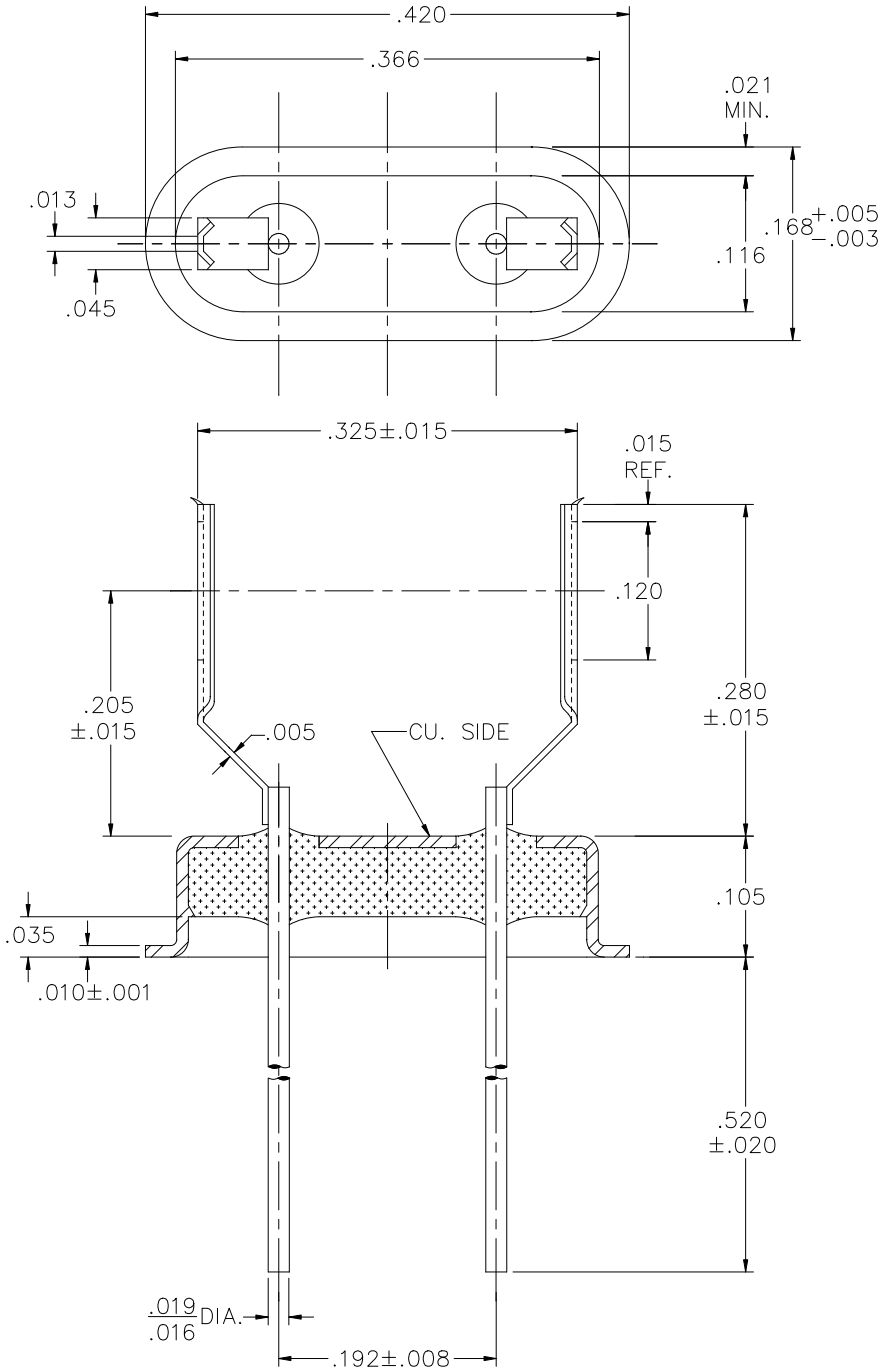

MATERIAL:

EYELET – 30/70 COPPER CLAD KOVAR.
GLASS – 7052 OR EQUAL.
LEADS – ASTM F–15 ALLOY, KOVAR.
MOUNT – C770 NICKEL SILVER, FULL HARD.

PLATING:

1. OPTION: RoHS COMPLIANT ELECTROLESS NICKEL PLATE OF 100 MICROINCHES MINIMUM FINAL PLATE.
2. OPTION: RoHS COMPLIANT ELECTROLESS NICKEL PLATE OF 100 MICROINCHES MINIMUM FOLLOWED BY A RoHS COMPLIANT SOLDER COAT OF A TIN ALLOY, ON LEADS ONLY.
3. OPTION: RoHS COMPLIANT ELECTROLESS NICKEL PLATE OF 100 MICROINCHES MINIMUM FOLLOWED BY A GOLD FLASH OF .99999 PURE 24 KARAT GOLD UP TO A MAX. OF 8 MICROINCHES.

DRAWN BY: E.T.W. 07–28–06	MATERIAL: SEE ABOVE			TOLERANCING PER ANSI Y14.5 .X ±.005 .XXX ±.005 .XX ±.005 ANG ±5° UNLESS OTHERWISE SPECIFIED	Legacy Technologies Inc. 6700 W. 47th TERR. MISSION, KS. 66203 TEL: 913–432–2487 FAX: 913–432–0570
CHECKED BY:	APP. SPECS	SUPERSEDES	NEXT ASSY	SCALE: N.T.S.	FINISH: UNLESS OTHERWISE SPECIFIED
APPROVED BY:	TITLE: HC–43/U W/ SLOT MOUNT				PART NUMBER: CW–185–WSM006A B.325 RoHS
					FILE: LA00049B PAGE 1 OF 1