THE INFORMATION CONTAINED IN THIS DRAWING IS THE SOLE PROPERTY OF LEGACY TECHNOLOGIES, INC. ANY REPRODUCTION IN PART OR WHOLE WITHOUT THE WRITTEN PERMISSION OF LEGACY TECHNOLOGIES, INC. IS PROHIBITED.

REV	DESCRIPTION OF REVISION	E.C.N.	BY	APPROVED	DATE
A	CORRECTED LEAD LENGTH WAS .615±.015 TO 1.520 ±.020		E.C.	E.T.W.	02-10-15

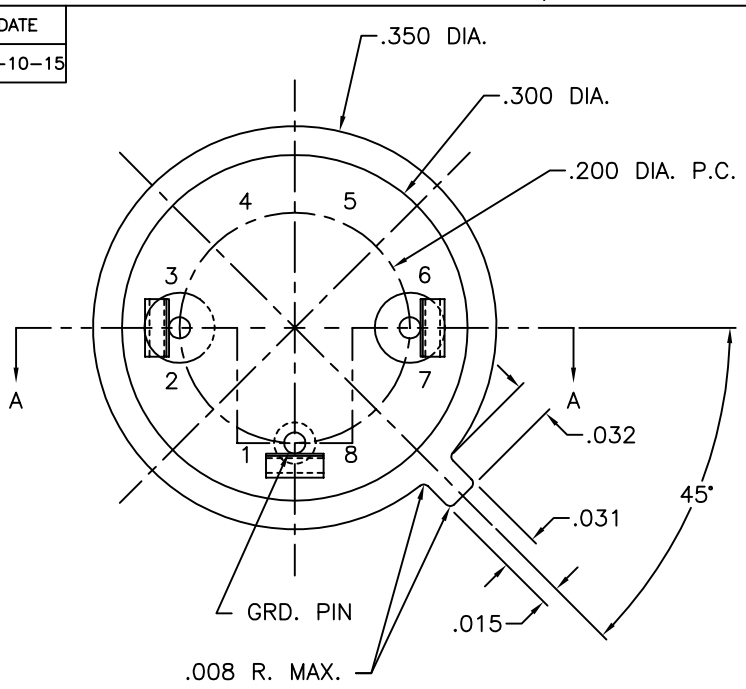

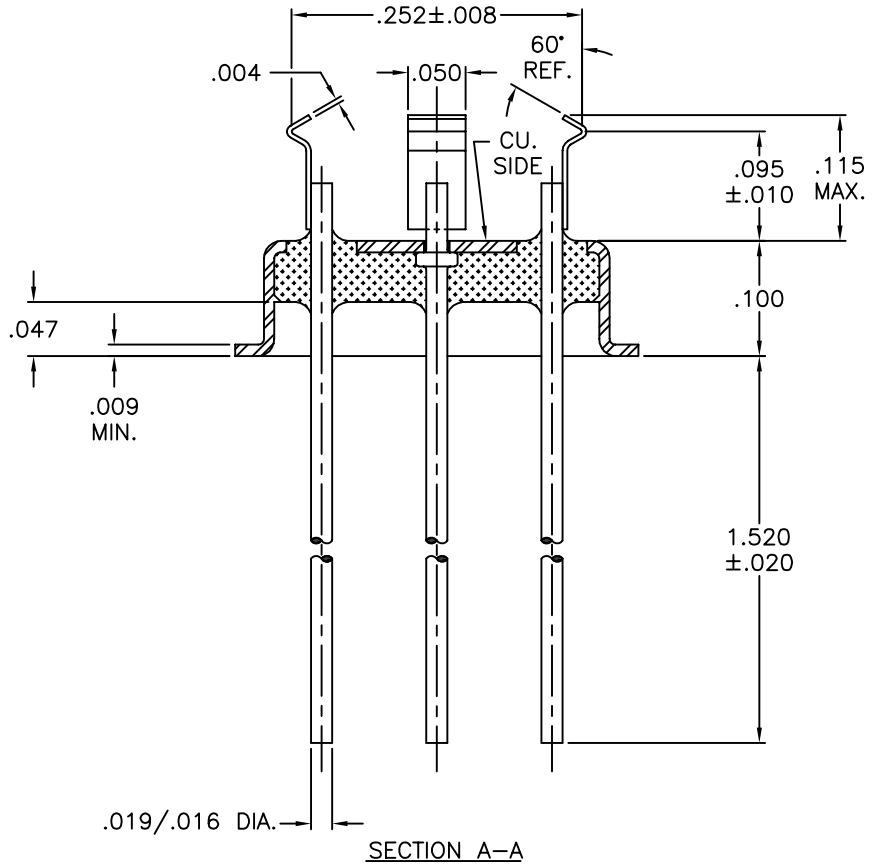

SECTION A–A

MATERIAL:
- EYELET – 30/70 COPPER CLAD KOVAR.
- GLASS – 7052 OR EQUAL, OPAQUE.
- LEADS – ASTM F–15 ALLOY, KOVAR.
- MOUNT – 205 NICKEL, FULL HARD.

PLATING:
1. ELECTROLESS NICKEL FINAL PLATE OF 100 MICROINCHES MINIMUM.
2. OPTIONAL SOLDER COAT ON LEADS ONLY PER MIL–STD QQ–S–571–D TIN LEAD ALLOY.
3. OPTIONAL GOLD FLASH .99999 PURE 24 KARAT GOLD UP TO A MAX. OF 8 MICROINCHES OVER THE ELECTROLESS NICKEL FINAL PLATE.

DRAWN BY: TINA MOSS 02–06–96	MATERIAL: SEE ABOVE		TOLERANCING PER ANSI Y14.5 .X ±.005 .XXX ±.005 .XX ±.005 ANG ±5° UNLESS OTHERWISE SPECIFIED	LTI Legacy Technologies Inc. 6700 W. 47th TERR. MISSION, KS. 66203 TEL: 913–432–2487 FAX: 913–432–0570
CHECKED BY: E.T.W. 02–06–96	APP. SPECS / SUPERSEDES / NEXT ASSY		SCALE: 6:1	FINISH: UNLESS OTHERWISE SPECIFIED √
APPROVED BY:	TITLE: HC–35/U NARROW FLANGE TYPE W/ V–CLIP			PART NUMBER: CW–T05–BX–VN450B — A
				FILE: GA00014 — PAGE 1 OF 1