Reach Duo Downlight arcolight

Class III **IP20**

Installation Please read these instructions before installing.

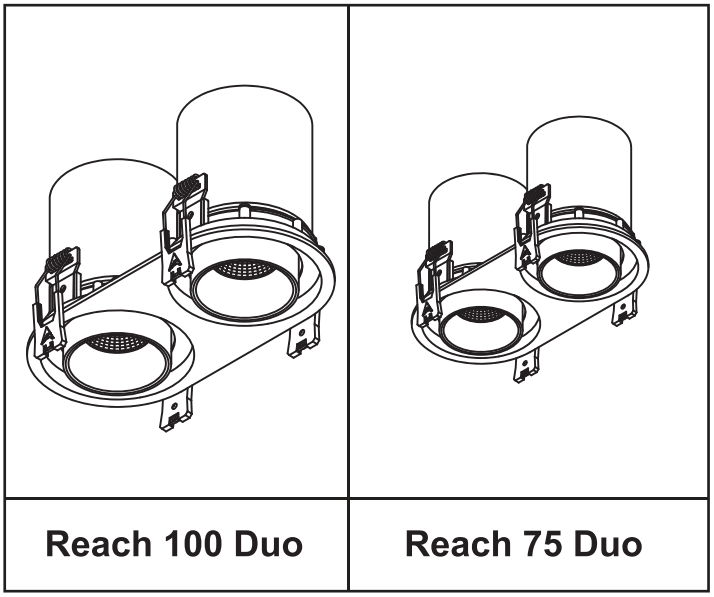

Reach 100 Duo	Reach 75 Duo

Model	A	B	C	D	E
Reach 100 Duo	100mm x 200mm	190mm	110mm	90mm	92mm x 192mm
Reach 75 Duo	75mm x 150mm	164mm	95mm	75mm	70mm x 145mm

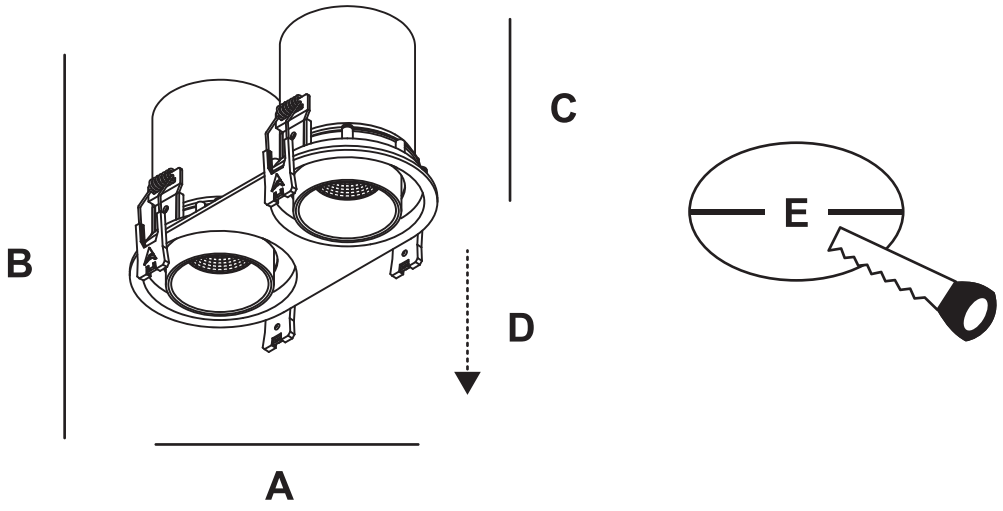

Cutout Diagrams

Reach 100 Duo

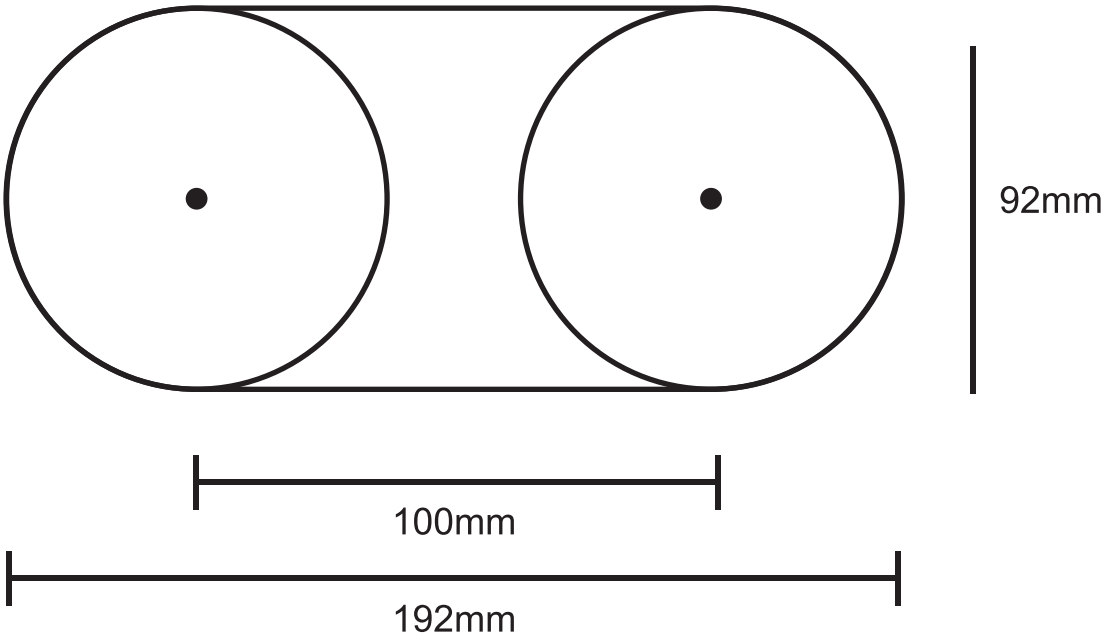

Reach 75 Duo

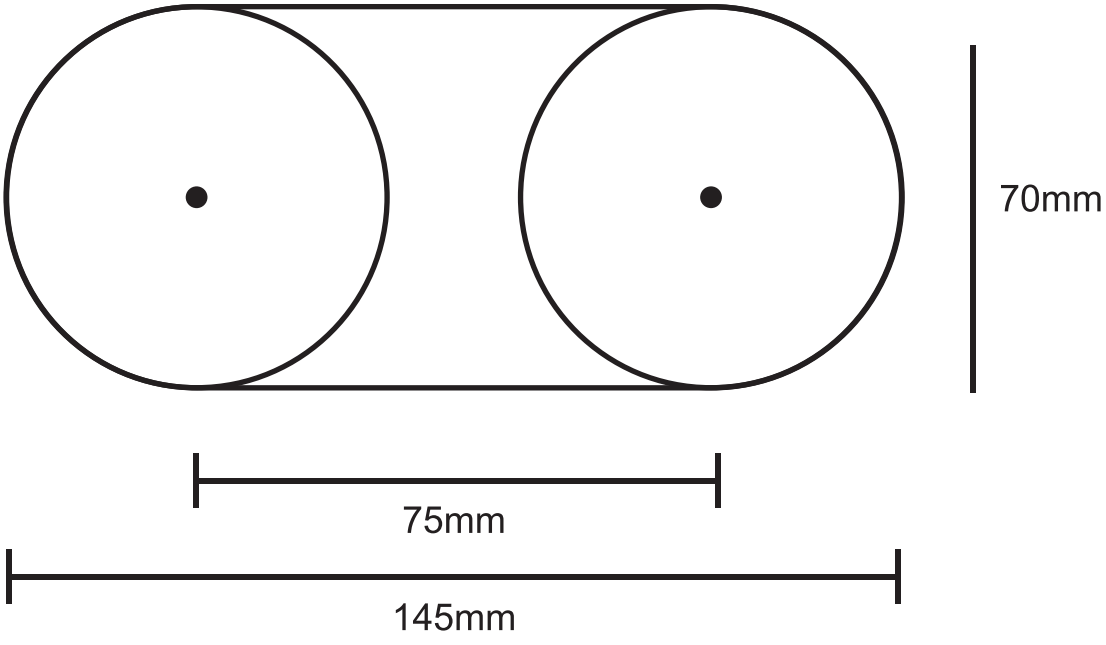

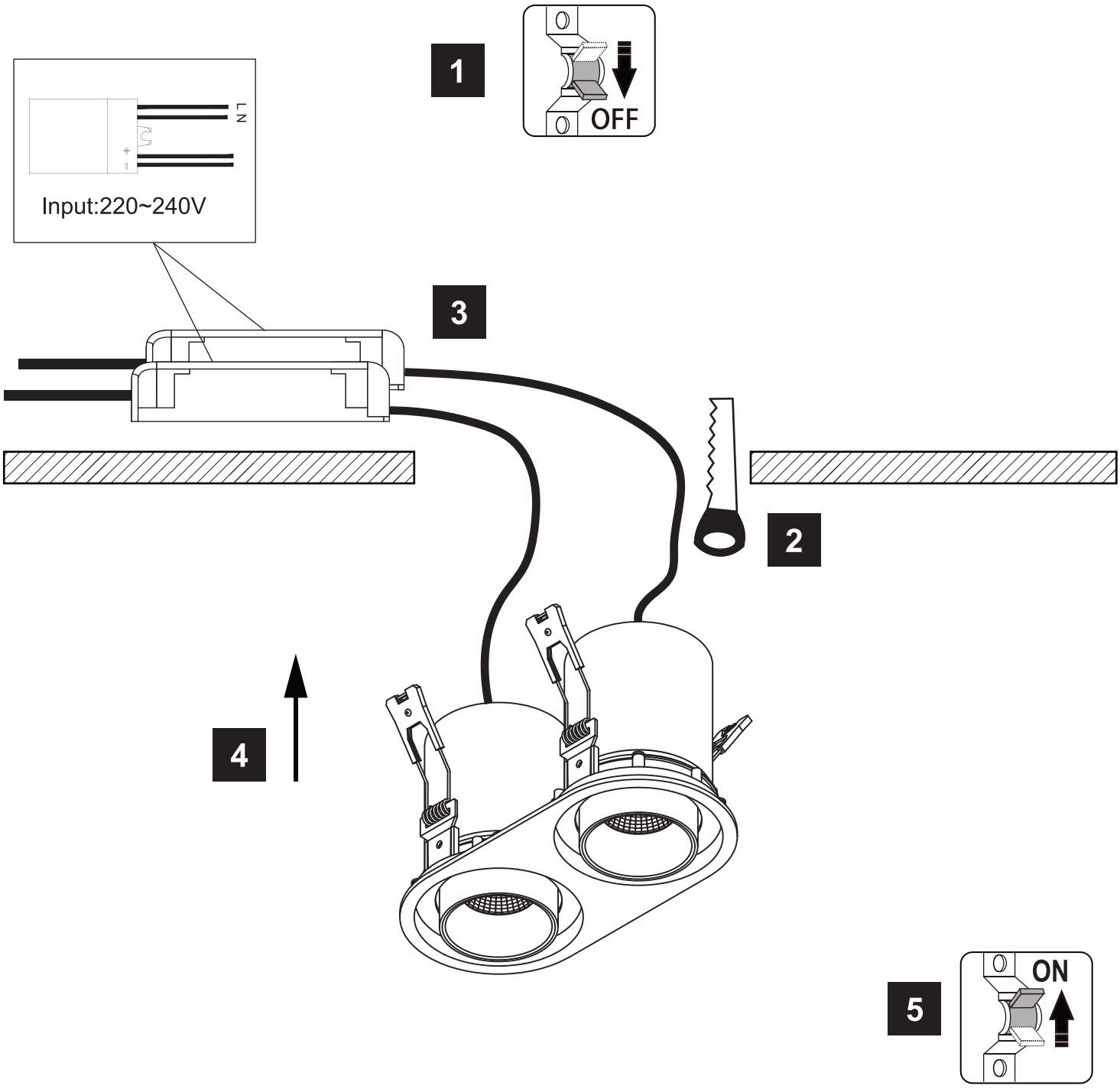

WARNING	**Declared electrical work must be installed by licensed electrictian.**

Clearance Information - AS/NZS 3000 Wiring Rules

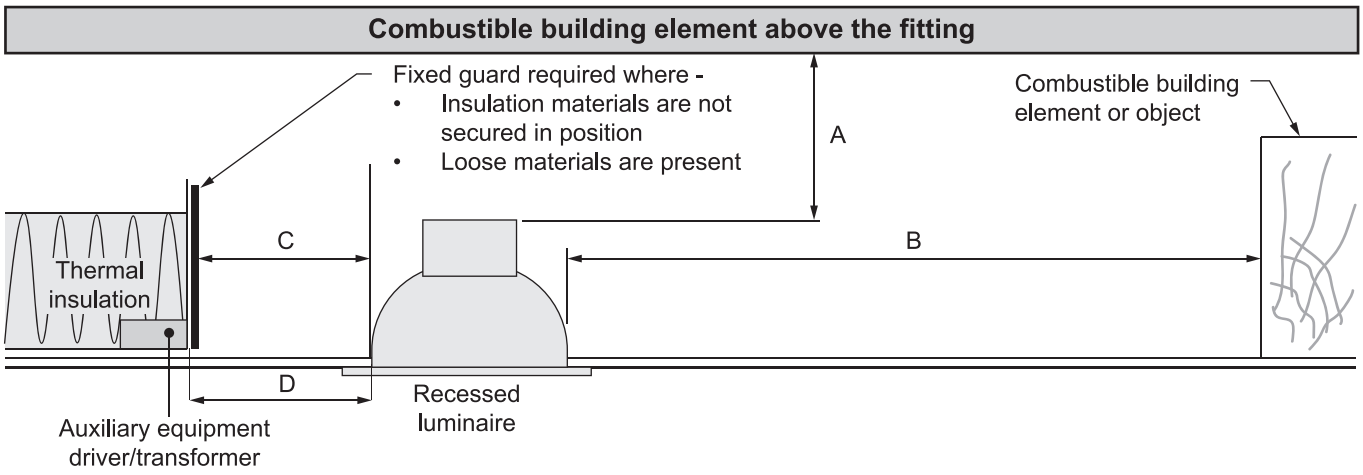

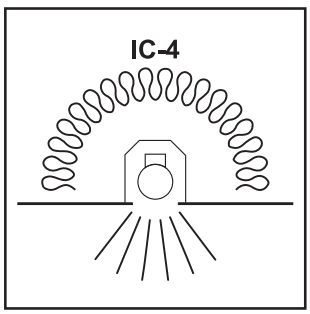

IC-4 Luminaire
AS/NZS60598.2.2:2016

Location	Distance
A - Clearance above luminaire	0mm
B - Side clearance to Structural member	0mm
C - Clearance to thermal insulation	0mm