# Reach

Downlight

arcolight

Class III

IP20

## Installation

Please read these instructions before installing.

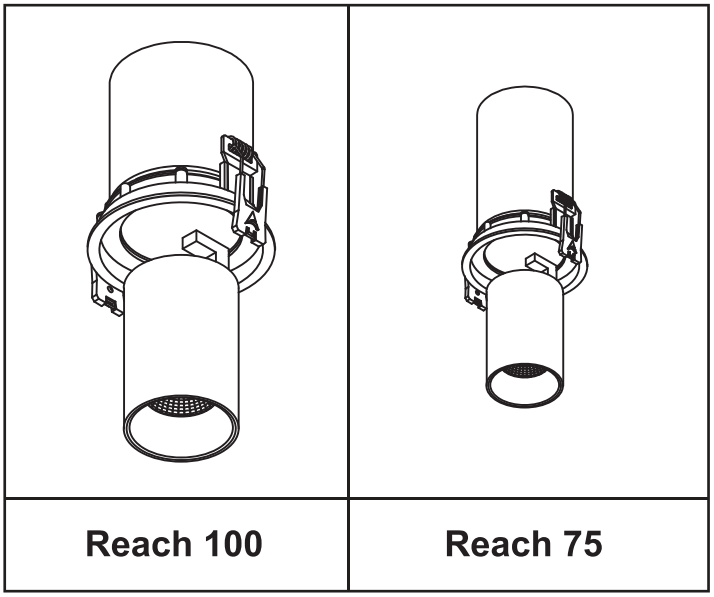

| Reach 100 | Reach 75 |
|---|---|

| Model | A | B | C | D | E |
|---|---|---|---|---|---|
| Reach 100 | 100mm | 190mm | 110mm | 90mm | 92mm |
| Reach 75 | 75mm | 164mm | 95mm | 75mm | 70mm |

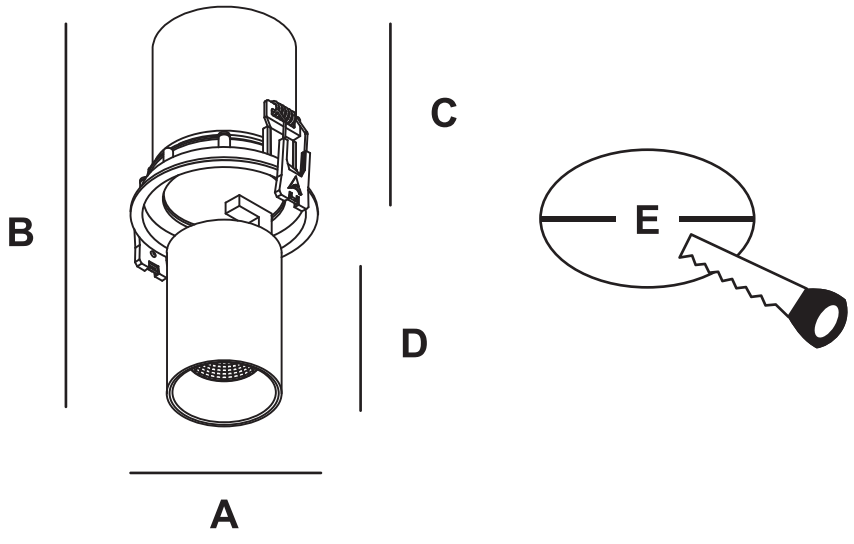

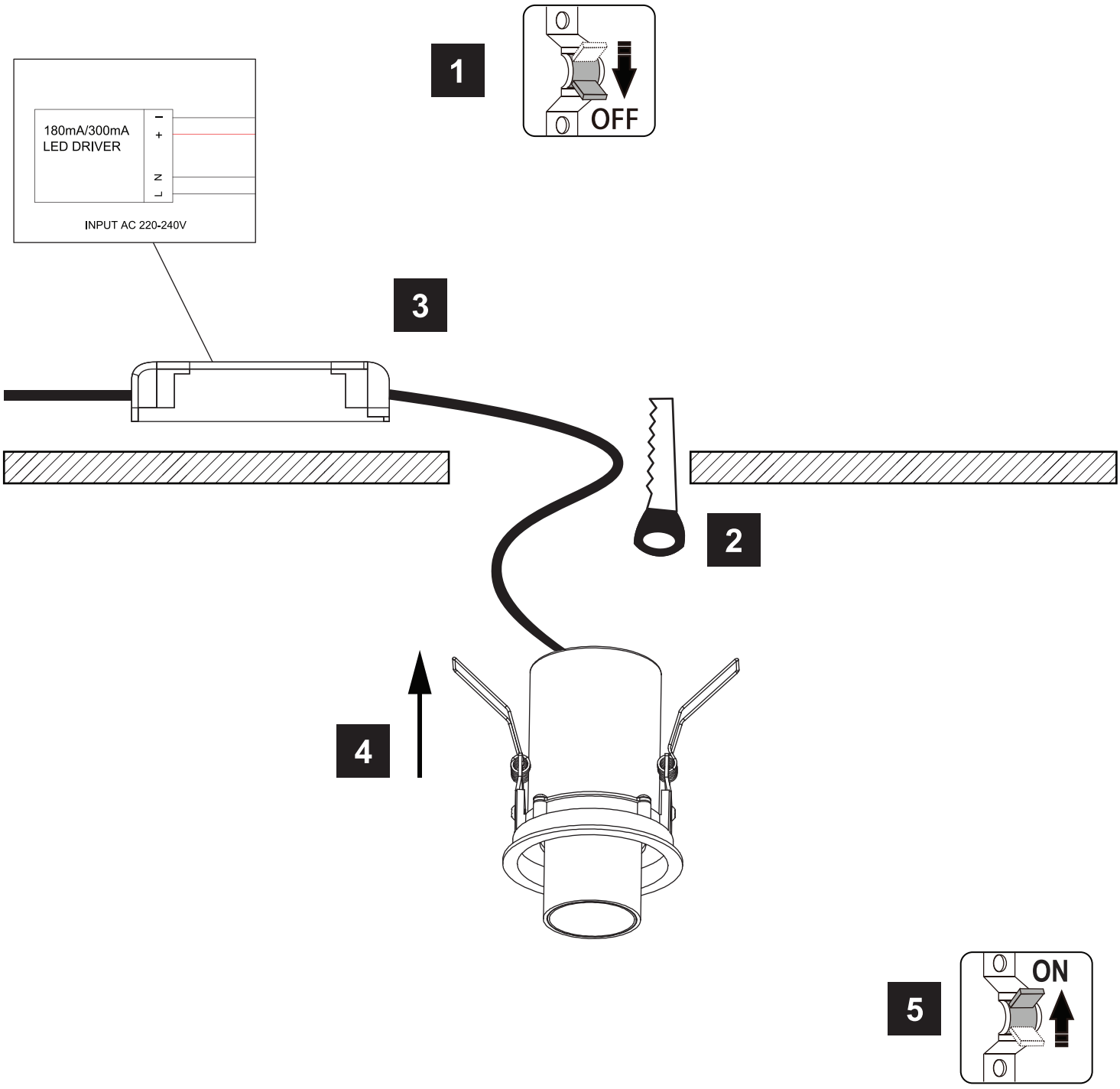


| | |
|---|---|
| ⚠ **WARNING** | **Declared electrical work must be installed by licensed electrictian.** |

Clearance Information - AS/NZS 3000 Wiring Rules

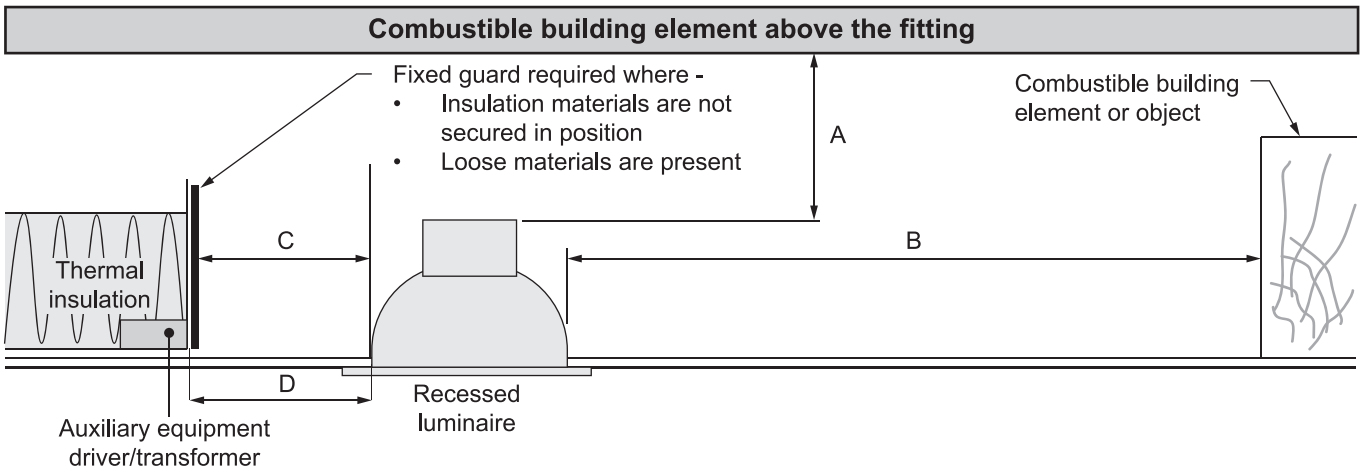


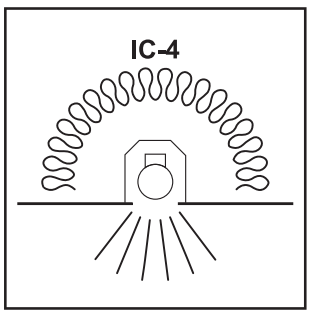


**IC-4 Luminaire**
AS/NZS60598.2.2:2016

| Location | Distance |
|---|---|
| A - Clearance above luminaire | 0mm |
| B - Side clearance to Structural member | 0mm |
| C - Clearance to thermal insulation | 0mm |