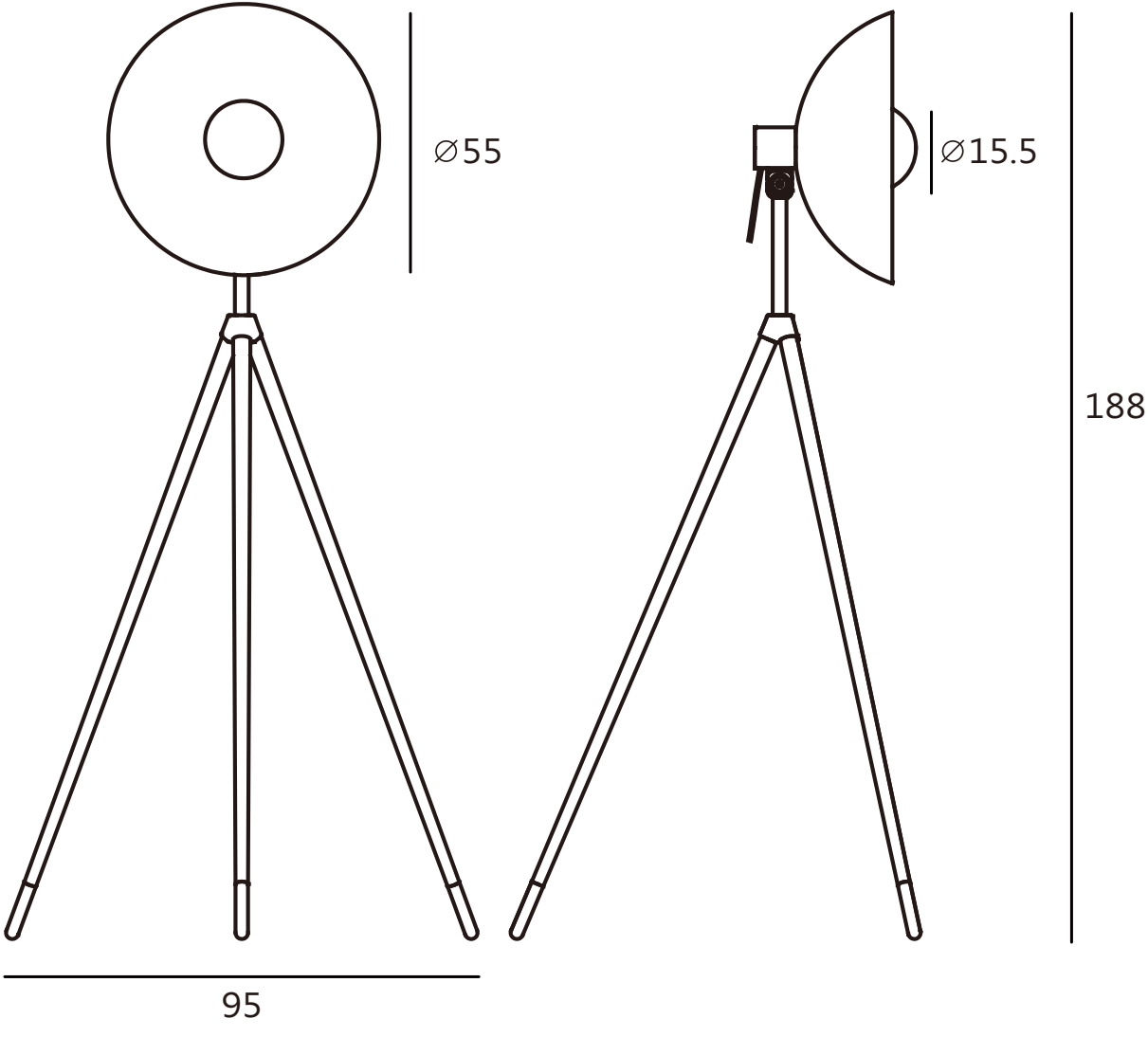
∅55
∅15.5
188
95