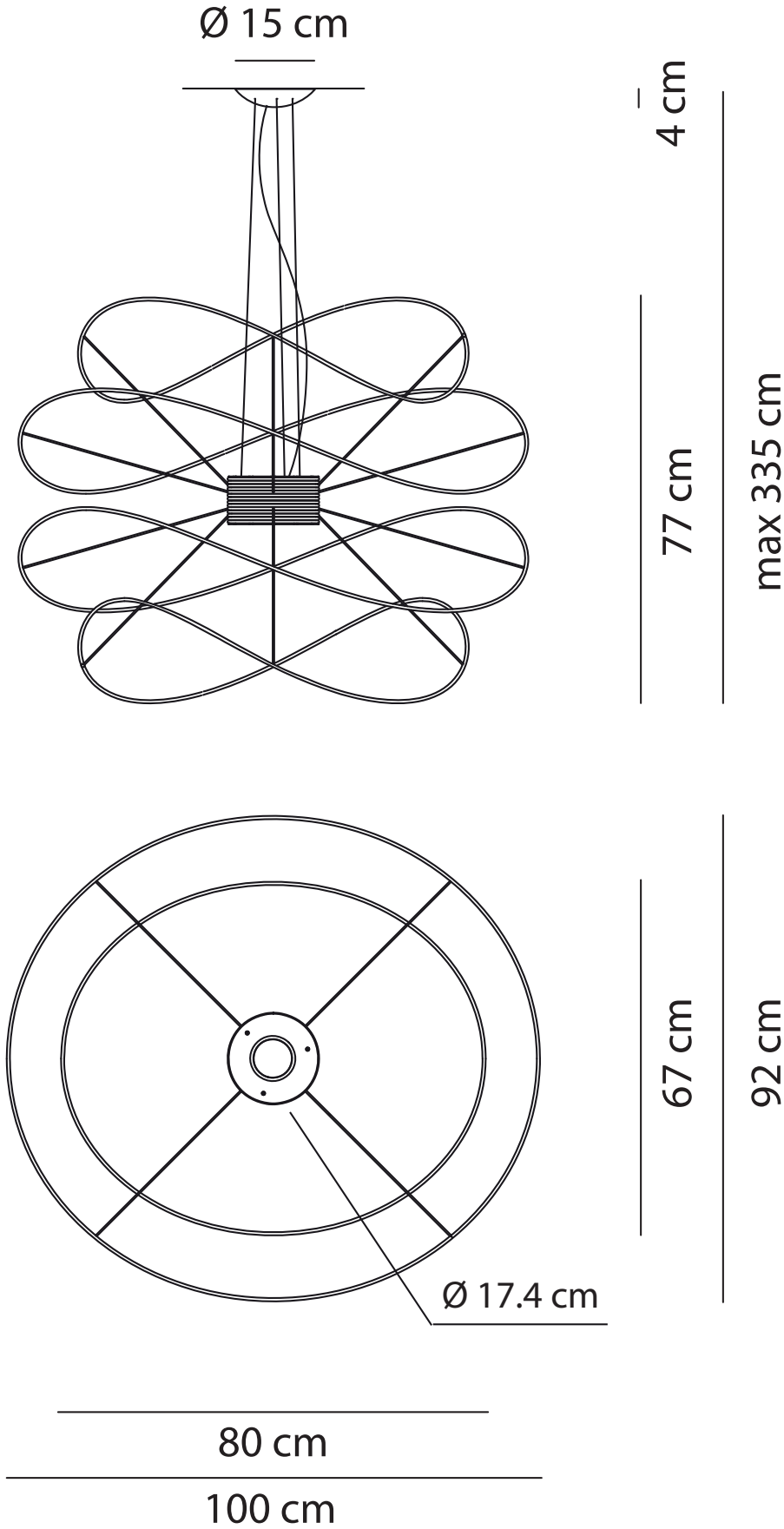
Ø 15 cm
4 cm
77 cm
max 335 cm
67 cm
92 cm
Ø 17.4 cm
80 cm
100 cm