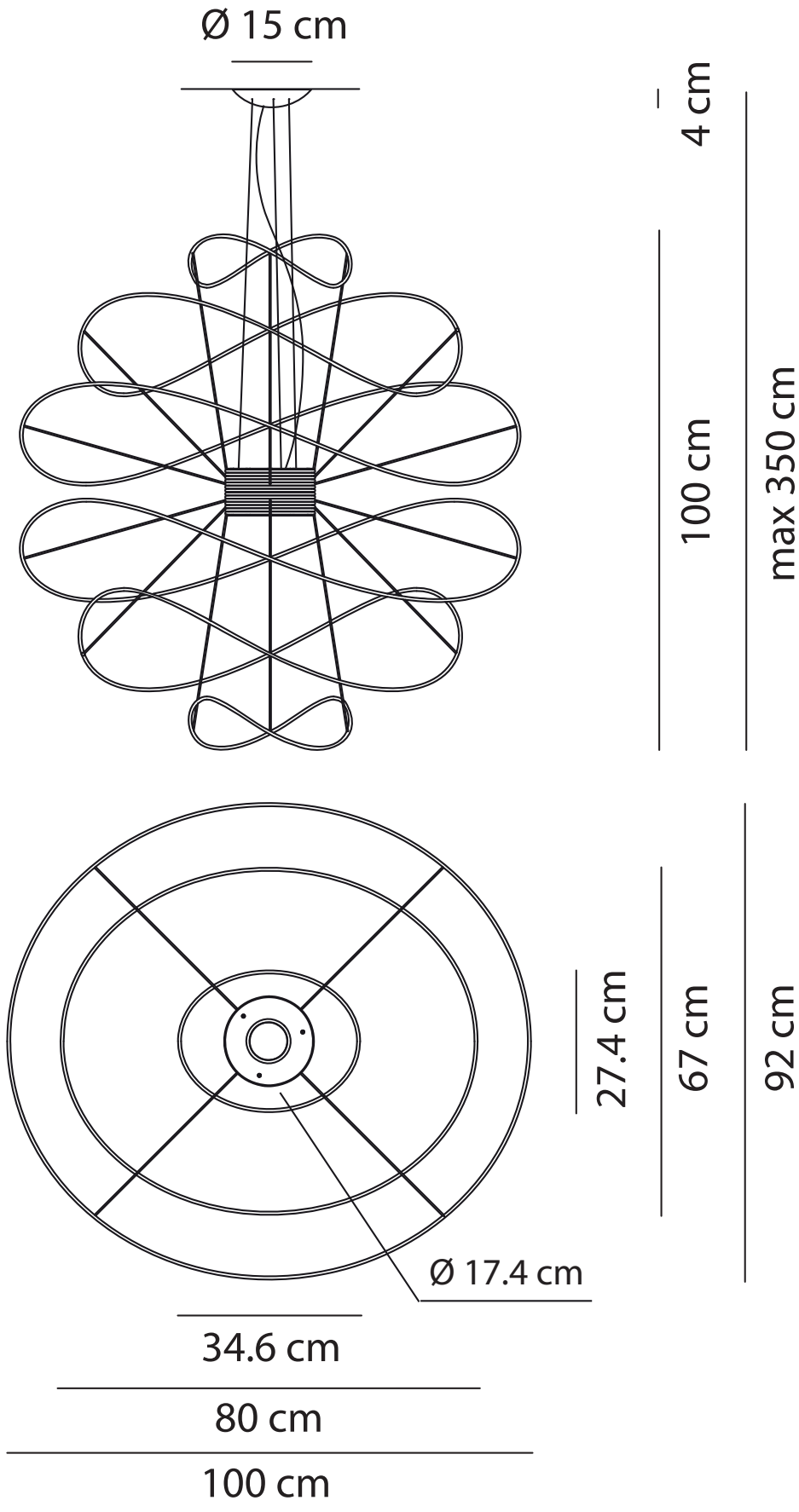
Ø 15 cm
4 cm
100 cm
max 350 cm
27.4 cm
67 cm
92 cm
Ø 17.4 cm
34.6 cm
80 cm
100 cm