| STATE | PROJECT NUMBER |
|---|---|
| MISSISSIPPI | STP-0250-00(053)LPA |

| PLANS STAGE | DATE PRINTED |
|---|---|
| ☐ FIELD REVIEW | |
| ☐ OFFICE REVIEW. | |
| ☐ PSE | |
| ☒ STREET READY | 04-11-2024 |

# CITY OF JACKSON, MISSISSIPPI

## FEDERAL AID PROJECT NO. STP-0250-00(053)LPA/108075-701000

### MILL AND OVERLAY OF WOODROW WILSON DRIVE WITH SIDEWALK IMPROVEMENTS
### MARTIN LUTHER KING JR. DRIVE TO MILL STREET BRIDGE

SCALES

| | | |
|---|---|---|
| PLAN | | 1 IN.= 100 FT. |
| PROFILE | HOR. | 1 IN.= 100 FT. |
| | VERT. | 1 IN.= 10 FT. |
| LAYOUT | | 1 IN.= FT. |

BRIDGE STRUCTURES REQ'D.
N/A

BOX BRIDGES REQ'D.
N/A

EQUATIONS
N/A

EXCEPTIONS
N/A

B.O.P
STA. 10+00.00

E.O.P.
STA. 52+92.98

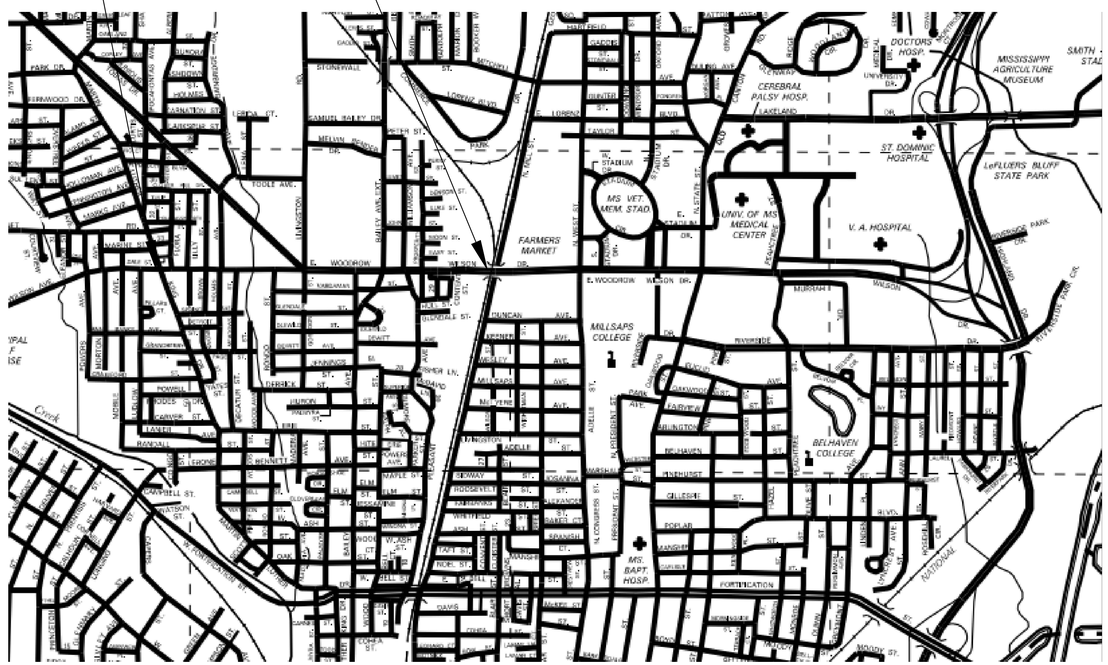


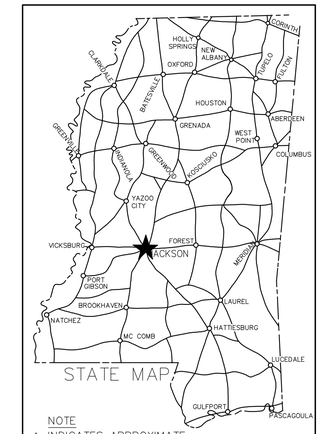


NOTE
★ INDICATES APPROXIMATE LOCATION OF PROJECT.

LAT. 32°19'37" LONG.90°11'44"
(APPROX. MIDDLE OF PROJECT)

DESIGN CONTROL
35 MPH = V (SPEED DESIGN)
ADT (2027) = 1.15 ADT (2017 ) = 21,800
DHV = ____ :D = ____ % T= ____ %

PERMITS

WETLANDS AND WATERS PERMITS ACQUIRED BY LPA

| | WATERS | WETLANDS |
|---|---|---|
| NATIONWIDE #14 | N | N |
| NATIONWIDE (OTHER)* | N | N |
| GENERAL* | N | N |
| INDIVIDUAL (404)* | N | N |

STORMWATER PERMIT N

| | |
|---|---|
| Y | REQUIRED, CNOI SUBMITTED BY LPA (DISTURBED AREA=5 ACRES) |
| S | REQUIRED, SCNOI TO BE SUBMITTED BY LPA (1 TO 4.99 ACRES) |
| N | NO STORMWATER PERMIT REQUIRED (<1 ACRE) |

APPROVED BY: _____ DATE _____

MAYOR
CHOKWE ANTAR LUMUMBA

CITY COUNCIL
ASHBY FOOTE
MELVIN PRIESTER, JR.
KENNITH I. STOKES
DE'KEITHER STAMPS
CHARLES TILMAN
AARON BANKS
VIRGI LINDSAY

JOHN MIDDLETON TRIPLETT
LICENSED PROFESSIONAL ENGINEER
PE-16571
STATE OF MISSISSIPPI
11 APRIL 2024

LENGTH DATA

| | | | |
|---|---|---|---|
| LENGTH OF ROADWAY | FT. 4,293 | 0.81 | MI. |
| LENGTH OF BRIDGES | | | MI. |
| LENGTH OF PROJECT (NET) | FT. 4,910 | 0.81 | MI. |
| LENGTH OF EXCEPTIONS | | | MI. |
| LENGTH OF PROJECT (GROSS) | FT. 4,910 | 0.81 | MI. |

REVISIONS | BY | DATE

ROBERT LEE P.E., CITY ENGINEER DATE

PREPARED BY:

11 APRIL 2024

JOHN M. TRIPLETT, P.E., P.L.S. DATE
MS PE LICENSE NO. 16571

## SHEET INDEX

| SHEET NO | WKNG NUMBER | DESCRIPTION |
|---|---|---|
| -- | -- | TITLE |
| 2 | SH INDEX | SHEET INDEX & GENERAL NOTES |
| 3 | TS1 | TYPICAL SECTIONS 1 |
| 4 | TS2 | TYPICAL SECTIONS 2 |
| 5 | TS3 | TYPICAL SECTIONS 3 |
| 6 | TS4 | TYPICAL SECTIONS 4 |
| 7 | TS5 | SECTION DETAILS |
| 8 | TS6 | SECTION DETAILS |
| 9 | SQ | SUMMARY OF QUANTITIES |
| 10 | RECAP | QUANTITIES RECAP |
| 11 | DEMO1 | DEMOLITION SHEET 1 |
| 12 | DEMO2 | DEMOLITION SHEET 2 |
| 13 | DEMO3 | DEMOLITION SHEET 3 |
| 14 | DEMO4 | DEMOLITION SHEET 4 |
| 15 | DEMO5 | DEMOLITION SHEET 5 |
| 16 | PROP1 | PROPOSED IMPROVEMENTS SHEET 1 |
| 17 | PROP2 | PROPOSED IMPROVEMENTS SHEET 2 |
| 18 | PROP3 | PROPOSED IMPROVEMENTS SHEET 3 |
| 19 | PROP4 | PROPOSED IMPROVEMENTS SHEET 4 |
| 20 | PROP5 | PROPOSED IMPROVEMENTS SHEET 5 |
| 21 | PM1 | PAVEMENT MARKING 1 |
| 22 | PM2 | PAVEMENT MARKING 2 |
| 23 | PM3 | PAVEMENT MARKING 3 |
| 24 | PM4 | PAVEMENT MARKING 4 |
| 25 | PM5 | PAVEMENT MARKING 5 |
| 26 | TC1 | TRAFFIC CONTROL 1 |
| 27 | SG1 | TRAFFIC SIGNALS |
| 28 | SG2 | TRAFFIC SIGNAL GENERAL NOTES |
| 6003 | CRP-1B | CONTINUOUSLY REINFORCED CONCRETE PAVEMENT 16'-0" WIDE |
| 6011 | CIP-1 | CONCRETE ISLAND PAVEMENT DETAILS |
| 6051 | PM-1 | PAVEMENT MARKING DETAILS FOR 2-LANE & 4-LANE DIVIDED ROADWAYS |
| 6052 | PM-2 | PAVEMENT MARKING DETAILS FOR 3,4, & 5 LANE UNDIVIDED ROADWAYS |
| 6055 | PM-5 | PAVEMENT MARKING LEGEND DETAILS |
| 6056 | PM-6 | PAVEMENT MARKING LEGEND DETAILS |
| 6058 | PM-8 | 4-LANE TO 2-LANE TRANSITION AT INTERCHANGE |
| 6060 | PM-10 | PAVEMENT MARKING DETAILS FOR INTERCHANGE WITH LANE DROPS |
| 6303 | SN-3 | STANDARD ROADSIDE SIGNS |
| 6304 | SN-3A | STANDARD ROADSIDE SIGNS |
| 6305 | SN-3B | STANDARD ROADSIDE SIGNS |
| 6306 | SN-4 | STANDARD ROADSIDE SIGNS ASSEMBLY AND INSTALLATION |
| 6307 | SN-4A | STANDARD ROADSIDE SIGNS ASSEMBLY AND INSTALLATION |
| 6308 | SN-4B | STANDARD ROADSIDE SIGNS ASSEMBLY AND INSTALLATION |
| 6310 | SN-6B | BREAKAWAY SIGN SUPPORT |
| 6352 | TCP-2 | TRAFFIC CONTROL PLAN FOR POSTED SPEED LIMIT LESS THAN 65 MPH (4-LANE: MEDIAN LANE OR OUTSIDE LANE CLOSURE)(WORK DAY ONLY) |
| 6353 | TCP-3 | TRAFFIC CONTROL PLAN FOR POSTED SPEED LIMIT LESS THAN 65 MPH (4-LANE: MEDIAN LANE OR OUTSIDE LANE CLOSURE)(EXTENDED PERIOD) |
| 6358 | TCP-8 | HIGHWAY SIGN AND BARRICADE DETAILS FOR CONSTRUCTION PROJECTS |
| 6362 | TCP-12 | TRAFFIC CONTROL PLANS: UNEVEN PAVEMENT DETAILS |
| 6364 | TCP-14 | TEMPORARY STRIPING FOR TRAFFIC CONTROL 4-LANE AND 5-LANE UNDIVIDED HIGHWAYS |
| 6366 | TCP-16 | TRAFFIC CONTROL DETAILS DRUM PLACEMENT AND SHOULDER CLOSURE |
| 6419 | SD-1 | DRIVEWAYS, CURB & GUTTER, AND SIDEWALK |
| 6420 | SD-2 | DRIVEWAYS, INTEGRAL CURB AND SIDEWALK |
| 6421 | CR-1 | CURB RAMPS RAMP DESIGN ELEMENTS |
| 6422 | CR-2 | CURB RAMPS PLACEMENT DETAILS |
| 6423 | CR-3 | CURB RAMPS PLACEMENT DETAILS |
| 6424 | CR-4 | CURB RAMPS: DETECTABLE WARNING DETAILS |
| 6590 | TSD-2 | HEADS, SIGNS AND WIND SPEEDS |
| 6591 | TSD-3C | CURVED MAST ARM |
| 6592 | TSD-4 | SIGNAL POLE AND PEDESTAL |
| 6593 | TSD-12 | SPAN WIRE DETAILS |

## GENERAL NOTES:

1) All signs, signals, pavement markings, and temporary traffic control devices are to conform to the MANUAL ON UNIFORM TRAFFIC CONTROL DEVICES (latest edition).

2) Underground utilities shown on plans are plotted in their approximate locations from the best information available to the Engineer. The Engineer does not guarantee their accuracy or guarantee that all utilities are shown. The Contractor shall be responsible for making for himself independent investigations, including subsurface investigations as may be necessary. It is the responsibility of the contractor to locate all underground utilities.

3) All poles, pullboxes, controllers, and pavement markings shall be field located by the Engineer and the Contractor at the nearest practical location indicated to the location shown on the plan sheets.

4) Flush the pole foundations with the top of the sidewalk.

5) Once Contractor begins work, he is responsible for maintenance of the existing traffic signal, as per M.D.O.T. pay item 618-A001, Maintenance of Traffic.

6) Specifications from the MISSISSIPPI STANDARD SPECIFICATIONS FOR ROAD & BRIDGE CONSTRUCTION by MISSISSIPPI DEPARTMENT OF TRANSPORTATION, 2017 edition will be used unless otherwise modified by special provisions.

7) Cones shall be narrow profile with a minimum height of 28 inches and a minimum weight of ten (10) pounds.

8) All plastic drums shall have a ballasting collar made from recycled truck tires or other suitable material.

9) Fluorescent orange sheeting shall be used on all construction and traffic control signs except for those designated on the plans to be black legend and border on white background.

10) The Contractor shall comply with the statutory requirements of Section 45-15-1, et. seq., Mississippi Code of 1972, regarding the performance of work in the proximity of high voltage overhead power lines.

11) The Contractor is responsible for field verification of existing grades and making adjustments as necessary with the approval of the project engineer.

12) It shall be responsibility of the Contractor to protect existing structures such as pipes, inlets, aprons, bridges, etc. from damage which might occur during construction. Extreme care should be exercised in undercut areas and the undercut depth may be adjusted at cross drains, as directed by the engineer. The Contractor shall replace or repair, as directed by the engineer, any structures damaged during the life of the contract. No payment will be made for replacement or repair of damaged items.

13) Work on structures for this project requires excavation in the immediate vicinity of traffic and adjacent properties. Therefore, the risk of a failure occurring during the excavation requires that extreme caution be exercised. It shall be the Contractor's responsibility to place what bracing, shoring, or ground support system that is deemed necessary to prevent a failure and protect the persons working near the excavation, the public that may be above the excavation, or any structure adjacent to the excavation. All costs for any protective measures including the materials and labor for designing, drawing and constructing the facility shall be absorbed in the prices bid for contract items.

14) All inlets and junction boxes shall have inverts cast in the bottom to prevent them from holding water. The cost of the inverts shall ve absorbed.

15) All pavement markings removed or obscured by construction activities, to be replaced immediately with temporary pavement markings and maintained by Contractor until new asphalt is placed.

16) A tack coat will be required on all milled surfaces prior to application of the asphalt overlay and between different types of asphalt lifts.

17) The contractor shall ensure that all water trapped by milling, excavation, or other construction procedure is immediately and continuously removed so as to avoid moisture issues with road subgrade or structural foundations.

18) All driveways to be be removed shall be sawcut. All trenches cut in pavement for storm drain installation shall be sawcut.

19) Location and spacing of signs shown on traffic control plan are typical and actual placement may require adjustment for field conditions.

20) A 30% shrinkage factor used for borrow material calculations is for estimate purposes only.

21) The contractor shall maintain access to all fronting properties along the project route throughout the duration of the project.

22) Storage of flammable materials will not be allowed under bridge structures.

23) See additional notes and details on sheets TS-1 through TS-6.

## STRIPING NOTES:

1) The work under this section consists of the Contractor furnishing all materials, preparing the pavement surface and installing the pavement markings. All pavement marking materials shall be approved by the engineer prior to installation.

2) The dimensions shown to pavement stripes are to the center of the stripe or in the case of a double stripe, to the center of the double stripe.

3) The pavement marking drawings are schematic only and not to scale. The Contractor shall follow all dimensions, details and standards when installing pavement stripes, markings and markers.

4) Contractor to spot mark entire project before striping it. Contractor to call the Project Engineer to make arrangements for inspection prior to applying any markings. Any striping applied before inspection shall be subject to removal and restriped at Contractor's expense.

## TRAFFIC CONTROL:

1) The contractor shall maintain a minimum of one lane open for traffic use in both directions for all phases of construction.

2) All commercial and residential accesses shall be maintained. Means of access maintenance will not be measured for separate payment; cost is to be absorbed into other items bid.

3) The contractor shall maintain ingress access for emergency vehicles at all times throughout the duration of the project, in all phases, in all directions as approved by the engineer and the city.

4) A protective barrier will be required to prevent traffic from crossing any grade separations exceeding three (3) inches and within eight (8) feet of a used travel lane. Where portable median barrier may be utilized for this purpose, an 8:1 taper at end sections is recommended (see detail sheet TS6). If no taper is utilized, an attenuator will be required at the end of the barrier run facing oncoming traffic.

5) Minor adjustment to placement of portable median barriers will not be measured for separate payment; cost to be absorbed in price for other items bid.

**CONTACT INFORMATION FOR PUBLIC UTILITIES:**

City of Jackson Water and Wastewater: 601-960-2090
Atmos Energy: 601-961-6600
AT&T: 601-922-8879
Entergy: 601-922-8879


SOL
Engineering Services, LLC
106 SOUTH PRESIDENT STREET
4th FLOOR
JACKSON, MS 39201
Phone: (601) 961-1415
Fax: (601) 960-0420
Web: www.solengrs.com



NOTICE TO DRAWING HOLDER

THE ENGINEER HAS PREPARED AND FURNISHED THIS DRAWINGS TO THE OWNER FOR USE ON THIS PROJECT ONLY AND ARE NOT TO BE USED ON OTHER PROJECTS OR EXTENSIONS OF THIS PROJECT OR ON ANY OTHER PROJECT. ANY REUSE OF THIS DRAWING, WITHOUT WRITTEN AGREEMENT BY THE ENGINEER, SHALL BE AT THE REUSER'S SOLE RISK AND THE REUSER SHALL INDEMNIFY AND HOLD HARMLESS THE ENGINEER.


MILL AND OVERLAY
WOODROW WILSON DRIVE
JACKSON, MS.

| NO. | DATE | REVISION | CHECKED BY: | APPROVED BY: | BY: | APVD |
|---|---|---|---|---|---|---|
| 1 | | | | | | |
| 2 | | | | | | |
| 3 | | | | | | |
| 4 | | | | | | |
| 5 | | | | | | |
| 6 | | | | | | |

DESIGN BY: JT
DRAWN BY: ML

JOHN MIDDLETON TRIPLETT
LICENSED PROFESSIONAL ENGINEER
PE-18571
11 APRIL 2024
STATE OF MISSISSIPPI

SCALE: NTS
PROJECT NO: 108075
FILENAME:
DATE: 07/2022
SURVEYED BY: RT
SHEET TITLE: SH INDEX
WORKING NUMBER: SH INDEX

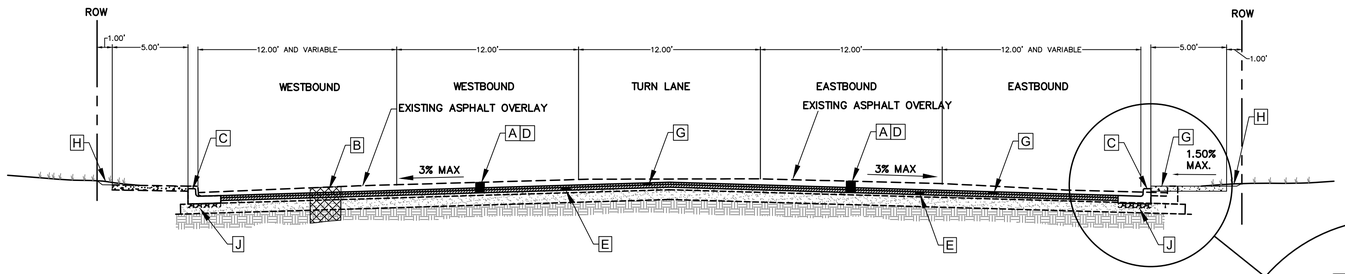


MARTIN LUTHER KING, JR. DRIVE TO MEDGAR EVERS BLVD/"FIVE POINTS" INTERSECTION

STA 10+00 (BOP) – STA 34+00

N.T.S.

A – MILL 7" AND VARIABLE.

B – REMOVE AND REPLACE FAILED AREAS. BACKFILL SUBGRADE WITH SIZE 610 CRUSHED STONE BASE, AND REPAIR CONCRETE PAVING SECTION WITH CLASS B CONCRETE DOWELED IN PLACE.

C – REMOVE AND REPLACE EXISTING CURB (TYPE 1) TO ALLOW CORRECT GUTTER SECTION AND FULL CURB HEIGHT AS SHOWN.

D – SELECTIVE MILLING AND LEVELING TO CORRECT CROWN TO 3% (AS DIRECTED BY ENGINEER)

E – OVERLAY WITH 4" 12.5 MM ST ASPHALT PAVEMENT, 2 LIFTS AT 2" EACH.

G – REMOVE AND REPLACE SIDEWALK ON SOUTH SIDE TO MEET ADA REQUIREMENTS. INTERSECTION RAMPS ONLY ARE TO BE ADA COMPLIANT ON THE NORTH SIDE.
(SEE DETAIL SHEETS 6419 – 6424)(INTERSECTION RAMPS ONLY ON NORTH SIDE, EXISTING SIDEWALK TO REMAIN)

H – REMOVE GRASS AND SOIL TO RESTORE FULL WIDTH OF SIDEWALK

J – 6" STONE BELOW CURB COMPACTED.

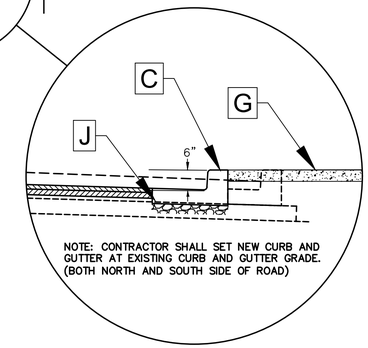



SOL
Engineering Services, LLC
106 SOUTH PRESIDENT STREET
4th FLOOR
JACKSON, MS 39201
Phone: (601) 961–1415
Fax: (601) 960–0420
Web: www.solengrs.com



NOTICE TO DRAWING HOLDER

THE ENGINEER HAS PREPARED AND FURNISHED THIS DRAWINGS TO THE OWNER FOR USE ON THIS PROJECT ONLY AND ARE NOT TO BE USED ON OTHER PROJECTS OR EXTENSIONS OF THIS PROJECT OR ON ANY OTHER PROJECT. ANY REUSE OF THIS DRAWING, WITHOUT WRITTEN AGREEMENT BY THE ENGINEER, SHALL BE AT THE REUSER'S SOLE RISK AND THE REUSER SHALL INDEMNIFY AND HOLD HARMLESS THE ENGINEER.


MILL AND OVERLAY
WOODROW WILSON DRIVE
JACKSON, MS.

| NO. | DATE | REVISION | BY | APVD |
|---|---|---|---|---|
| 1 | | | | |
| 2 | | | | |
| 3 | | | | |
| 4 | | | | |
| 5 | | | | |
| 6 | | | | |

DSGN BY: JT
DRAWN BY: ML
CHECKED BY:
APPROVED BY:

SCALE: NTS
PROJECT NO: 108075
FILENAME:
DATE: 07/2022
SURVEYED BY: RT
SHEET TITLE
TYPICAL SECTIONS
WORKING NUMBER
TS1

STP-0250-00(035)LPA 108075-701000 WOODROW WILSON DRIVE MILL & OVERLAY

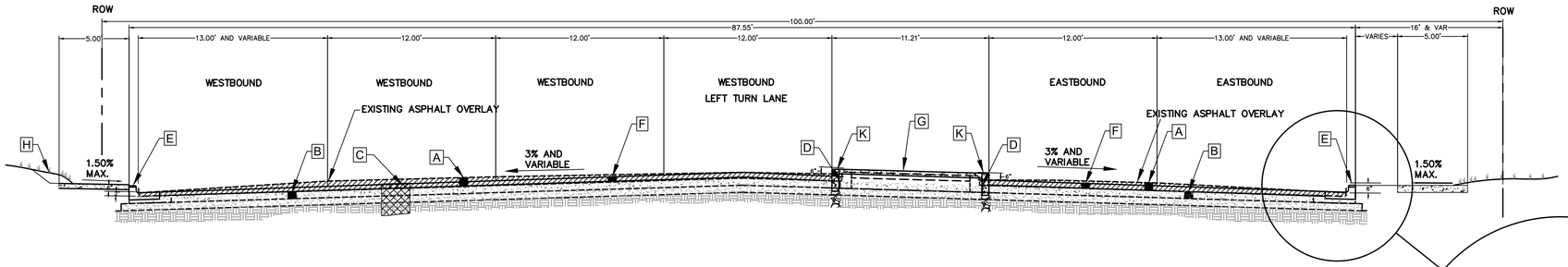


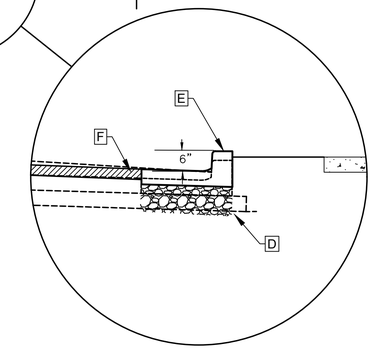


MEDGAR EVERS BLVD/"FIVE POINTS" INTERSECTION TO BAILEY AVE
(WESTBOUND LEFT TURN)
STA 34+00 – STA 43+00

A – MILL 4" TO 6" AND VARIABLE AS REQUIRED TO REMOVE FULL DEPTH OF EXISTING ASPHALT SURFACE DOWN TO CONCRETE BASE SURFACE. (406–A001 COLD MILLING)

B – EXISTING CONCRETE PAVING (7"+, ASSUMED).

C – REMOVE AND REPLACE FAILED AREAS. BACKFILL SUBGRADE WITH SIZE 610 CRUSHED STONE BASE, AND REPAIR CONCRETE PAVING SECTION WITH CLASS B CONCRETE DOWELED IN PLACE.

D – 6" STONE UNDER CURB COMPACTED.

E – NEW CURB & GUTTER REQ'D (SEE DETAIL, SHT SD–1).

F – OVERLAY WITH 2.5" 12.5MM ST ASPHALT PAVEMENT SURFACE COURSE.

G – REMOVE AND REPLACE EXISTING MEDIAN CURBS AND CONCRETE PAVING. SEE PLANS FOR VARIABLE WIDTHS.

H – REMOVE GRASS OVERGROWTH AND SOIL TO RESTORE FULL WIDTH OF SIDEWALK.

K – NEW HEADER CURB REQ'D (SEE DETAIL, SHT TS5, SD–2).

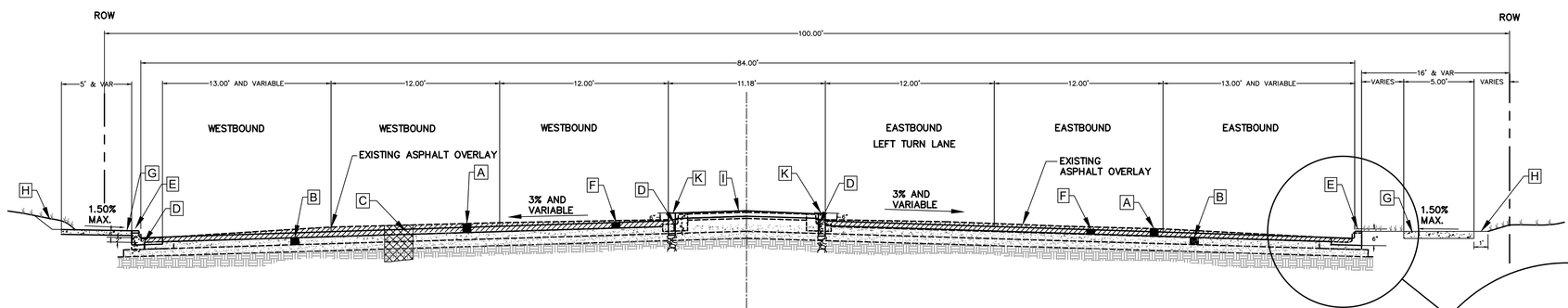


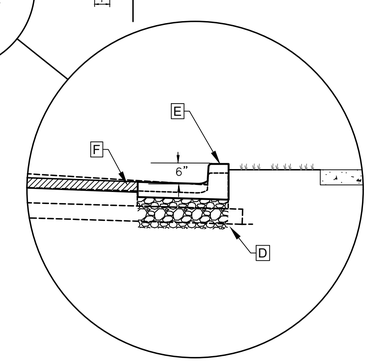


MEDGAR EVERS BLVD/"FIVE POINTS" INTERSECTION TO BAILEY AVE
(EASTBOUND LEFT TURN)
STA 34+00 – STA 43+00

A – MILL 4" TO 6" AND VARIABLE AS REQUIRED TO REMOVE FULL DEPTH OF EXISTING ASPHALT SURFACE DOWN TO CONCRETE BASE SURFACE. (406–A001 COLD MILLING)

B – EXISTING CONCRETE PAVING (7"+, ASSUMED) TO REMAIN IN PLACE.

C – REMOVE AND REPLACE FAILED AREAS. BACKFILL SUBGRADE WITH SIZE 610 CRUSHED STONE BASE, AND REPAIR CONCRETE PAVING SECTION WITH CLASS B CONCRETE DOWELED IN PLACE.

D – 6" STONE UNDER CURB COMPACTED.

E – NEW CURB & GUTTER REQ'D (SEE DETAIL, SHT SD–1).

F – OVERLAY WITH 2.5" 12.5MM ST ASPHALT PAVEMENT SURFACE COURSE.

G – REMOVE AND REPLACE FAILED OR UNSERVICEABLE SIDEWALK AS REQUIRED TO MEET ADA REQUIREMENTS. (SEE DETAIL SHEET TS3)(1.5% MAX. CROSS SLOPE) (INTERSECTION RAMPS NORTH SIDE ONLY)

H – REMOVE GRASS OVERGROWTH AND SOIL TO RESTORE FULL WIDTH OF SIDEWALK.

I – REMOVE AND REPLACE EXISTING MEDIAN CURBS AND CONCRETE ISLAND PAVING.

K – NEW HEADER CURB REQ'D (SEE DETAIL, SHT TS5, SD–2).


SOL
Engineering Services, LLC
106 SOUTH PRESIDENT STREET
4th FLOOR
JACKSON, MS 39201
Phone: (601) 961–1415
Fax: (601) 960–0420
Web: www.solengrs.com



NOTICE TO DRAWING HOLDER

THE ENGINEER HAS PREPARED AND FURNISHED THIS DRAWINGS TO THE OWNER FOR USE ON THIS PROJECT ONLY AND ARE NOT TO BE USED ON OTHER PROJECTS OR EXTENSIONS OF THIS PROJECT OR ON ANY OTHER PROJECT. ANY REUSE OF THIS DRAWING, WITHOUT WRITTEN AGREEMENT BY THE ENGINEER, SHALL BE AT THE REUSER'S SOLE RISK AND THE REUSER SHALL INDEMNIFY AND HOLD HARMLESS THE ENGINEER.


MILL AND OVERLAY
WOODROW WILSON DRIVE
JACKSON, MS.

| NO. | DATE | REVISION | DRAWN BY: ML | CHECKED BY: | APPROVED BY: | BY | APVD |
|---|---|---|---|---|---|---|---|
| 1 | | | | | | | |
| 2 | | | | | | | |
| 3 | | | | | | | |
| 4 | | | | | | | |
| 5 | | | | | | | |
| 6 | | | | | | | |

DSGN BY: JT

SCALE: NTS
PROJECT NO: 108075
FILENAME:
DATE: 07/2022
SURVEYED BY: RT
SHEET TITLE
TYPICAL SECTIONS
WORKING NUMBER
TS2

STP-0250-00(035)LPA 108075-701000 WOODROW WILSON DRIVE MILL & OVERLAY

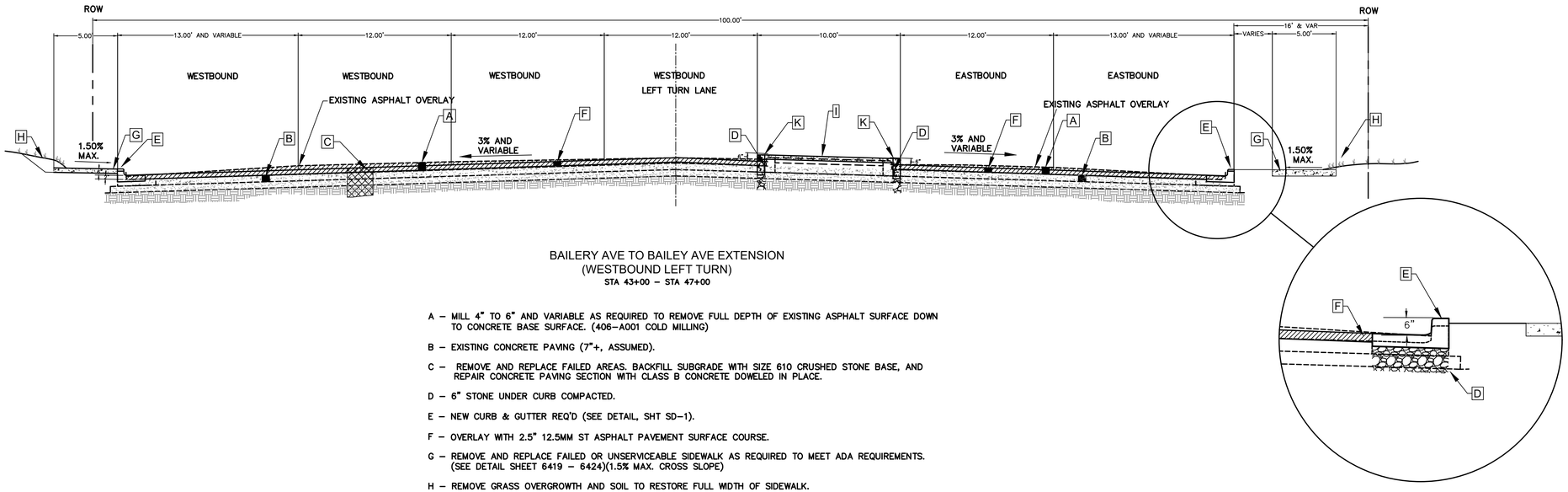


BAILERY AVE TO BAILEY AVE EXTENSION
(WESTBOUND LEFT TURN)
STA 43+00 – STA 47+00

A – MILL 4" TO 6" AND VARIABLE AS REQUIRED TO REMOVE FULL DEPTH OF EXISTING ASPHALT SURFACE DOWN TO CONCRETE BASE SURFACE. (406–A001 COLD MILLING)

B – EXISTING CONCRETE PAVING (7"+, ASSUMED).

C – REMOVE AND REPLACE FAILED AREAS. BACKFILL SUBGRADE WITH SIZE 610 CRUSHED STONE BASE, AND REPAIR CONCRETE PAVING SECTION WITH CLASS B CONCRETE DOWELED IN PLACE.

D – 6" STONE UNDER CURB COMPACTED.

E – NEW CURB & GUTTER REQ'D (SEE DETAIL, SHT SD–1).

F – OVERLAY WITH 2.5" 12.5MM ST ASPHALT PAVEMENT SURFACE COURSE.

G – REMOVE AND REPLACE FAILED OR UNSERVICEABLE SIDEWALK AS REQUIRED TO MEET ADA REQUIREMENTS. (SEE DETAIL SHEET 6419 – 6424)(1.5% MAX. CROSS SLOPE)

H – REMOVE GRASS OVERGROWTH AND SOIL TO RESTORE FULL WIDTH OF SIDEWALK.

I – REMOVE AND REPLACE EXISTING MEDIAN CURBS AND CONCRETE PAVING.

K – NEW HEADER CURB REQ'D (SEE DETAIL, SHT TS5, SD–2).

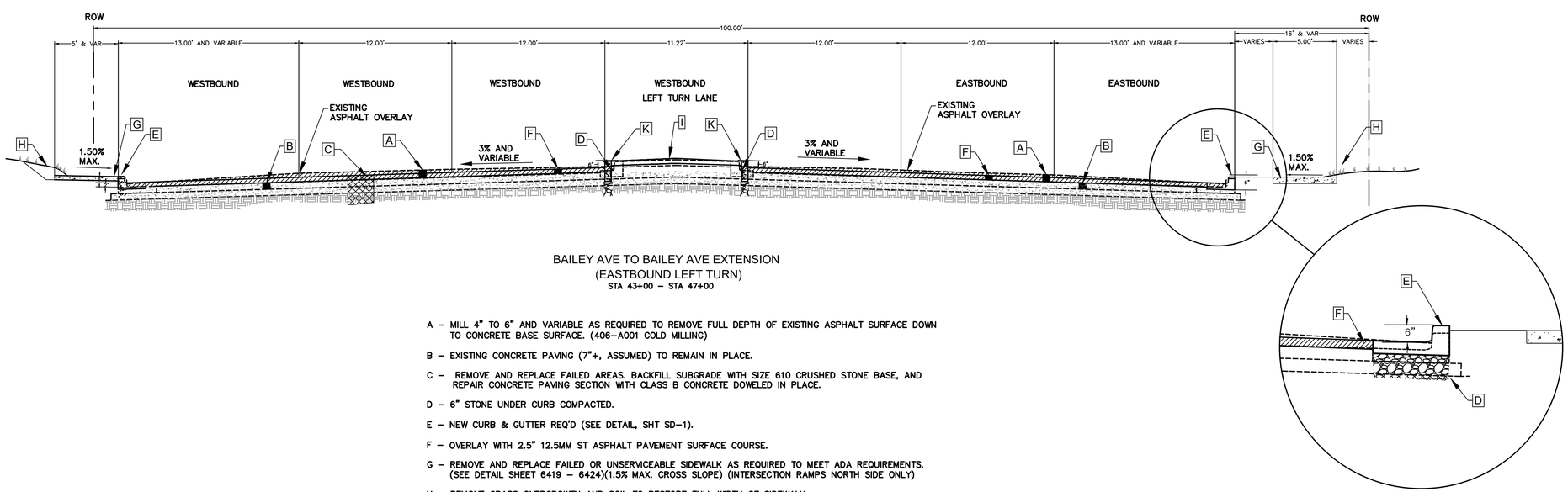


BAILEY AVE TO BAILEY AVE EXTENSION
(EASTBOUND LEFT TURN)
STA 43+00 – STA 47+00

A – MILL 4" TO 6" AND VARIABLE AS REQUIRED TO REMOVE FULL DEPTH OF EXISTING ASPHALT SURFACE DOWN TO CONCRETE BASE SURFACE. (406–A001 COLD MILLING)

B – EXISTING CONCRETE PAVING (7"+, ASSUMED) TO REMAIN IN PLACE.

C – REMOVE AND REPLACE FAILED AREAS. BACKFILL SUBGRADE WITH SIZE 610 CRUSHED STONE BASE, AND REPAIR CONCRETE PAVING SECTION WITH CLASS B CONCRETE DOWELED IN PLACE.

D – 6" STONE UNDER CURB COMPACTED.

E – NEW CURB & GUTTER REQ'D (SEE DETAIL, SHT SD–1).

F – OVERLAY WITH 2.5" 12.5MM ST ASPHALT PAVEMENT SURFACE COURSE.

G – REMOVE AND REPLACE FAILED OR UNSERVICEABLE SIDEWALK AS REQUIRED TO MEET ADA REQUIREMENTS. (SEE DETAIL SHEET 6419 – 6424)(1.5% MAX. CROSS SLOPE) (INTERSECTION RAMPS NORTH SIDE ONLY)

H – REMOVE GRASS OVERGROWTH AND SOIL TO RESTORE FULL WIDTH OF SIDEWALK.

I – REMOVE AND REPLACE EXISTING MEDIAN CURBS AND CONCRETE ISLAND PAVING.

K – NEW HEADER CURB REQ'D (SEE DETAIL, SHT TS5, SD–2).


SOL
Engineering Services, LLC
106 SOUTH PRESIDENT STREET
4th FLOOR
JACKSON, MS 39201
Phone: (601) 961–1415
Fax: (601) 960–0420
Web: www.solengrs.com



NOTICE TO DRAWING HOLDER

THE ENGINEER HAS PREPARED AND FURNISHED THIS DRAWINGS TO THE OWNER FOR USE ON THIS PROJECT ONLY AND ARE NOT TO BE USED ON OTHER PROJECTS OR EXTENSIONS OF THIS PROJECT OR ON ANY OTHER PROJECT. ANY REUSE OF THIS DRAWING, WITHOUT WRITTEN AGREEMENT BY THE ENGINEER, SHALL BE AT THE REUSER'S SOLE RISK AND THE REUSER SHALL INDEMNIFY AND HOLD HARMLESS THE ENGINEER.


MILL AND OVERLAY
WOODROW WILSON DRIVE
JACKSON, MS.

| NO. | DATE | REVISION | DRAWN BY: ML | CHECKED BY: | APPROVED BY: | BY | APVD |
|---|---|---|---|---|---|---|---|
| 6 | | | | | | | |
| 5 | | | | | | | |
| 4 | | | | | | | |
| 3 | | | | | | | |
| 2 | | | | | | | |
| 1 | | | | | | | |

DSGN BY: JT

SCALE: NTS
PROJECT NO: 108075
FILENAME:
DATE: 07/2022
SURVEYED BY: RT
SHEET TITLE
TYPICAL SECTIONS
WORKING NUMBER
TS3

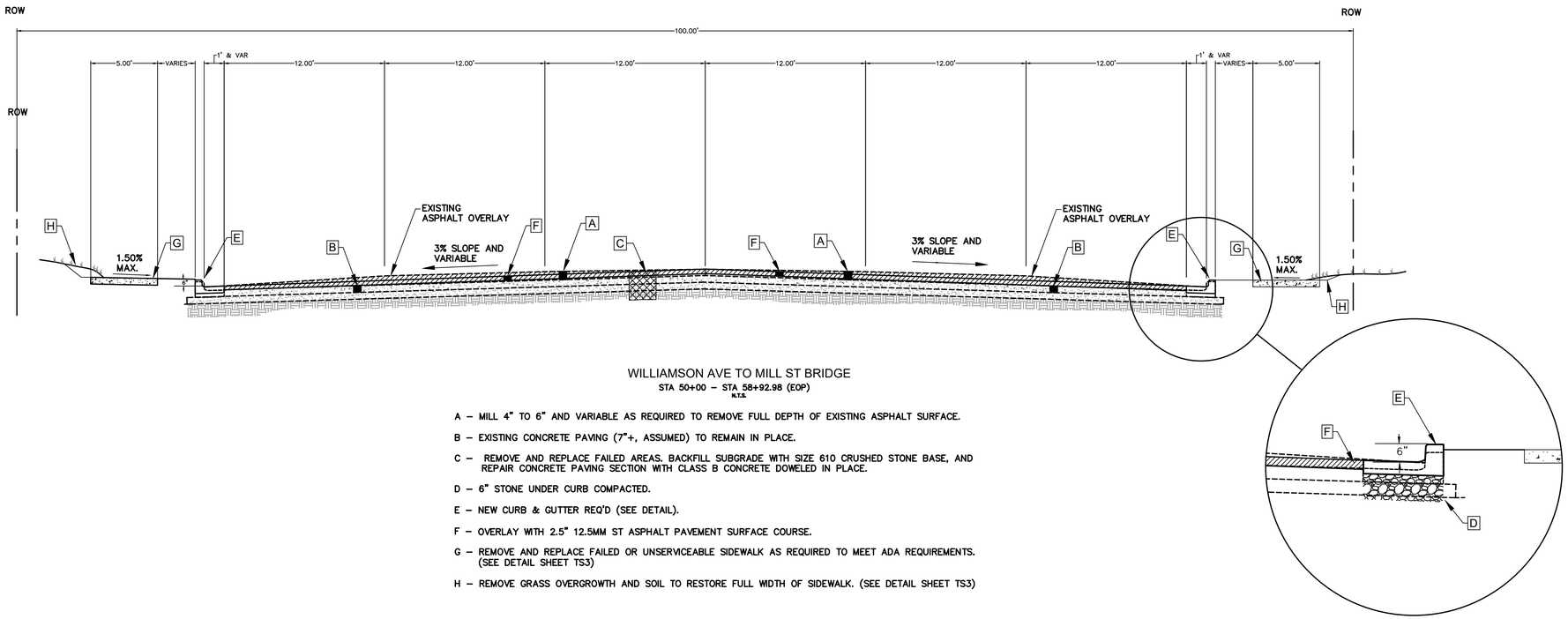


WILLIAMSON AVE TO MILL ST BRIDGE

STA 50+00 – STA 58+92.98 (EOP)

N.T.S.

A – MILL 4" TO 6" AND VARIABLE AS REQUIRED TO REMOVE FULL DEPTH OF EXISTING ASPHALT SURFACE.

B – EXISTING CONCRETE PAVING (7"+, ASSUMED) TO REMAIN IN PLACE.

C – REMOVE AND REPLACE FAILED AREAS. BACKFILL SUBGRADE WITH SIZE 610 CRUSHED STONE BASE, AND REPAIR CONCRETE PAVING SECTION WITH CLASS B CONCRETE DOWELED IN PLACE.

D – 6" STONE UNDER CURB COMPACTED.

E – NEW CURB & GUTTER REQ'D (SEE DETAIL).

F – OVERLAY WITH 2.5" 12.5MM ST ASPHALT PAVEMENT SURFACE COURSE.

G – REMOVE AND REPLACE FAILED OR UNSERVICEABLE SIDEWALK AS REQUIRED TO MEET ADA REQUIREMENTS. (SEE DETAIL SHEET TS3)

H – REMOVE GRASS OVERGROWTH AND SOIL TO RESTORE FULL WIDTH OF SIDEWALK. (SEE DETAIL SHEET TS3)

STP-0250-00(035)LPA 108075-701000 WOODROW WILSON DRIVE MILL & OVERLAY

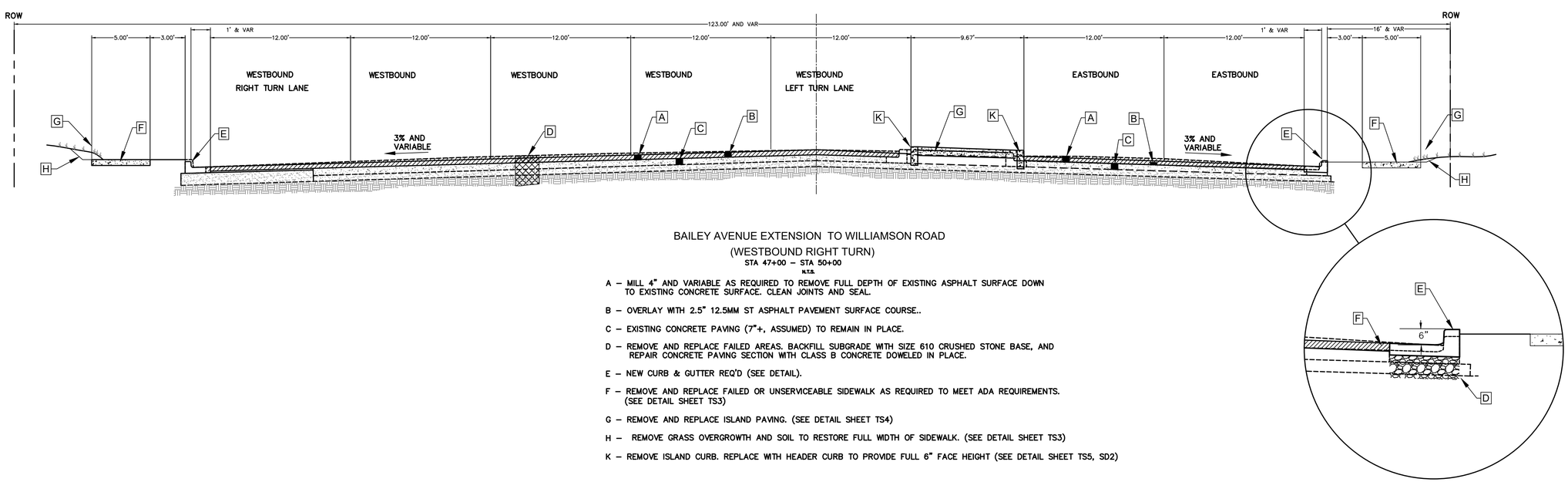


BAILEY AVENUE EXTENSION TO WILLIAMSON ROAD

(WESTBOUND RIGHT TURN)

STA 47+00 – STA 50+00

N.T.S.

A – MILL 4" AND VARIABLE AS REQUIRED TO REMOVE FULL DEPTH OF EXISTING ASPHALT SURFACE DOWN TO EXISTING CONCRETE SURFACE. CLEAN JOINTS AND SEAL.

B – OVERLAY WITH 2.5" 12.5MM ST ASPHALT PAVEMENT SURFACE COURSE..

C – EXISTING CONCRETE PAVING (7"+, ASSUMED) TO REMAIN IN PLACE.

D – REMOVE AND REPLACE FAILED AREAS. BACKFILL SUBGRADE WITH SIZE 610 CRUSHED STONE BASE, AND REPAIR CONCRETE PAVING SECTION WITH CLASS B CONCRETE DOWELED IN PLACE.

E – NEW CURB & GUTTER REQ'D (SEE DETAIL).

F – REMOVE AND REPLACE FAILED OR UNSERVICEABLE SIDEWALK AS REQUIRED TO MEET ADA REQUIREMENTS. (SEE DETAIL SHEET TS3)

G – REMOVE AND REPLACE ISLAND PAVING. (SEE DETAIL SHEET TS4)

H – REMOVE GRASS OVERGROWTH AND SOIL TO RESTORE FULL WIDTH OF SIDEWALK. (SEE DETAIL SHEET TS3)

K – REMOVE ISLAND CURB. REPLACE WITH HEADER CURB TO PROVIDE FULL 6" FACE HEIGHT (SEE DETAIL SHEET TS5, SD2)


SOL Engineering Services, LLC
106 SOUTH PRESIDENT STREET
4th FLOOR
JACKSON, MS 39201
Phone: (601) 961-1415
Fax: (601) 960-0420
Web: www.solengrs.com



NOTICE TO DRAWING HOLDER

THE ENGINEER HAS PREPARED AND FURNISHED THIS DRAWINGS TO THE OWNER FOR USE ON THIS PROJECT ONLY AND ARE NOT TO BE USED ON OTHER PROJECTS OR EXTENSIONS OF THIS PROJECT OR ON ANY OTHER PROJECT. ANY REUSE OF THIS DRAWING, WITHOUT WRITTEN AGREEMENT BY THE ENGINEER, SHALL BE AT THE REUSER'S SOLE RISK AND THE REUSER SHALL INDEMNIFY AND HOLD HARMLESS THE ENGINEER.


MILL AND OVERLAY
WOODROW WILSON DRIVE
JACKSON, MS.

| NO. | DATE | REVISION | DRAWN BY: ML | CHECKED BY: | APPROVED BY: | BY | APVD |
|---|---|---|---|---|---|---|---|
| 1 | | | | | | | |
| 2 | | | | | | | |
| 3 | | | | | | | |
| 4 | | | | | | | |
| 5 | | | | | | | |
| 6 | | | | | | | |

DSGN BY: JT

SCALE: NTS

PROJECT NO: 108075

FILENAME:

DATE: 07/2022

SURVEYED BY: RT

SHEET TITLE
TYPICAL SECTIONS

WORKING NUMBER
TS4

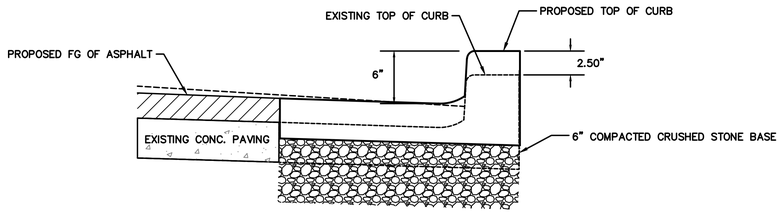


## PROPOSED CURB SECTION

STA 34+00 – E.O.P.
N.T.S.

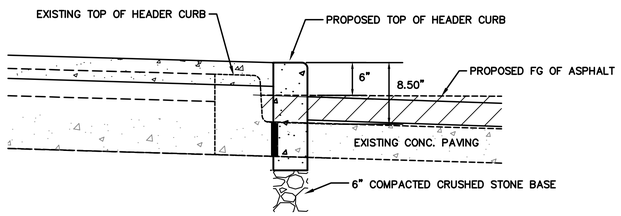


## PROPOSED MEDIAN CURB

STA 34+00 – E.O.P.
N.T.S.

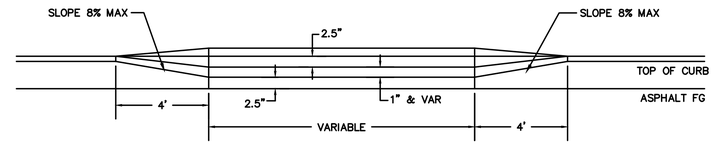


ELEVATION

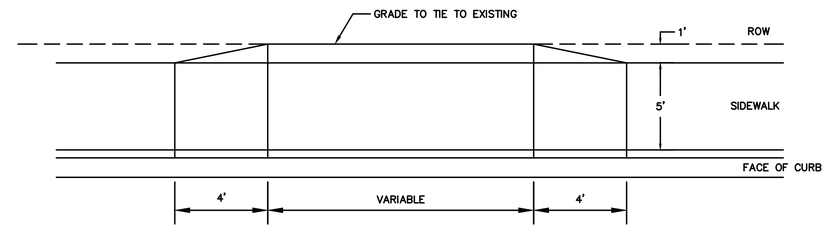


PLAN

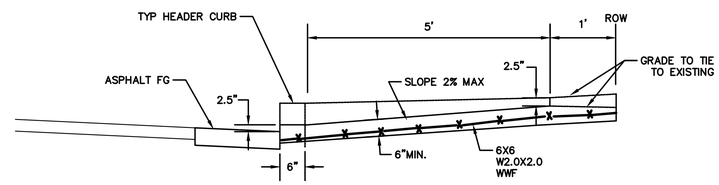


SECTION

## ADA DRIVEWAY DETAIL

N.T.S.


SOL
Engineering Services, LLC
106 SOUTH PRESIDENT STREET
4th FLOOR
JACKSON, MS 39201
Phone: (601) 961-1415
Fax: (601) 960-0420
Web: www.solengrs.com



NOTICE TO DRAWING HOLDER

THE ENGINEER HAS PREPARED AND FURNISHED THIS DRAWINGS TO THE OWNER FOR USE ON THIS PROJECT ONLY AND ARE NOT TO BE USED ON OTHER PROJECTS OR EXTENSIONS OF THIS PROJECT OR ON ANY OTHER PROJECT. ANY REUSE OF THIS DRAWING, WITHOUT WRITTEN AGREEMENT BY THE ENGINEER, SHALL BE AT THE REUSER'S SOLE RISK AND THE REUSER SHALL INDEMNIFY AND HOLD HARMLESS THE ENGINEER.


MILL AND OVERLAY
WOODROW WILSON DRIVE
JACKSON, MS.

| NO. | DATE | REVISION | BY | APVD |
|---|---|---|---|---|
| 1 | | | | |
| 2 | | | | |
| 3 | | | | |
| 4 | | | | |
| 5 | | | | |
| 6 | | | | |

DSGN BY: JT
DRAWN BY: ML
CHECKED BY:
APPROVED BY:

SCALE: NTS
PROJECT NO: 108075
FILENAME:
DATE: 07/2022
SURVEYED BY: RT
SHEET TITLE
SECTION DETAILS
WORKING NUMBER
TS5

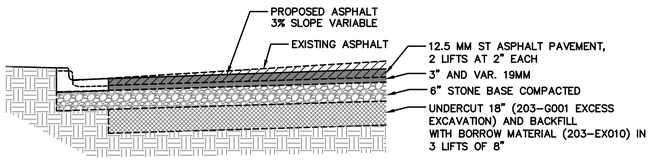


## PROPOSED PAVING DETAIL

STA 15+74 – 17+75

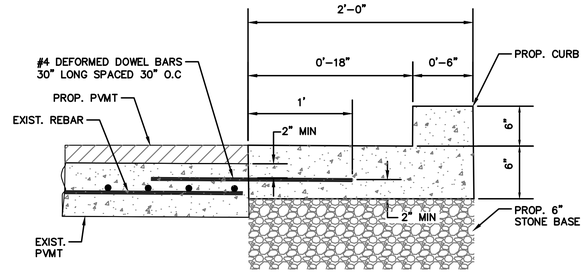


## PROPOSED DOWEL SECTION AT EDGE OF PAVEMENT

STA 34+00 – 58+92.98 (EOP)

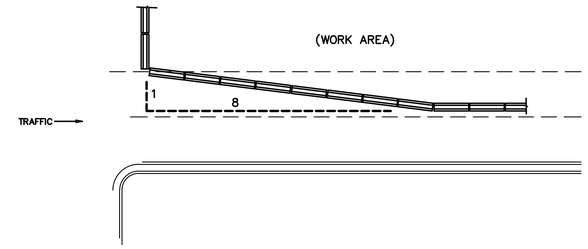


## PORTABLE MEDIAN BARRIER TAPER

N.T.S.

SOL
Engineering Services, LLC
106 SOUTH PRESIDENT STREET
4th FLOOR
JACKSON, MS 39201
Phone: (601) 961-1415
Fax: (601) 960-0420
Web: www.solengrs.com

NOTICE TO DRAWING HOLDER

THE ENGINEER HAS PREPARED AND FURNISHED THIS DRAWINGS TO THE OWNER FOR USE ON THIS PROJECT ONLY AND ARE NOT TO BE USED ON OTHER PROJECTS OR EXTENSIONS OF THIS PROJECT OR ON ANY OTHER PROJECT. ANY REUSE OF THIS DRAWING, WITHOUT WRITTEN AGREEMENT BY THE ENGINEER, SHALL BE AT THE REUSER'S SOLE RISK AND THE REUSER SHALL INDEMNIFY AND HOLD HARMLESS THE ENGINEER.

MILL AND OVERLAY
WOODROW WILSON DRIVE
JACKSON, MS.

| NO. | DATE | REVISION | BY | APVD |
|---|---|---|---|---|
| 1 | | | | |
| 2 | | | | |
| 3 | | | | |
| 4 | | | | |
| 5 | | | | |
| 6 | | | | |

DSGN BY: JT
DRAWN BY: ML
CHECKED BY:
APPROVED BY:

SCALE: NTS
PROJECT NO: 108075
FILENAME:
DATE: 07/2022
SURVEYED BY: RT
SHEET TITLE
SECTION DETAILS
WORKING NUMBER
TS6

| | | | | |
|---|---|---|---|---|
| 202-B088 | Removal of Curb & Gutter, All Types | LF | 10,345 | |
| 202-B163 | Removal of Inlet Tops | EA | 4 | |
| | | | | |
| 203-EX010 | Borrow Excavation, AH, FME, Class B17 | CY | 685 | |
| 203-G001 | Excess Excavation, FM, AH | CY | 930 | |
| 209-A006 | Geotextile Stabilization, Type VI | SY | 1,400 | |
| 216-A001 | Solid Sodding | SY | 140 | |
| 219-A001 | Watering | KGAL | 2,800 | |
| 237-A002 | Wattles, 20" | LF | 500 | |
| 304-G001 | Size 3/4" and Down Crushed Stone Base, AEA | CY | 633 | 2 |
| | OR | | | |
| 304-G002 | Size 610 Crushed Stone Base, AEA | CY | 633 | 2 |
| | OR | | | |
| 304-G003 | Size 825B Crushed Stone Base, AEA | CY | 633 | 2 |
| | | | | |
| 403-A003 | 12.5-mm, ST, Asphalt Pavement | TON | 7,600 | |
| 403-B006 | 19-mm, ST, Asphalt Pavement, Leveling | TON | 500 | 3 |
| [redacted] | | | | |
| 413-E001 | Sawing and Sealing Transverse Joints in Asphalt Pavement | LF | 11,899 | |
| 501-A002 | 8" Reinforced Cement Concrete Pavement, Broom Finish | SY | 500 | |
| 501-G001 | Dowels, Drilled and Installed | EA | 1,271 | |
| 503-C010 | Saw Cut, Full Depth | LF | 1,500 | |
| | | | | |
| 601-B001 | Class "B" Structural Concrete, Minor Structures | CY | 10 | |
| 602-A001 | Reinforcing Steel | LBS | 5,000 | |
| 608-B001 | Concrete Sidewalk, With Reinforcement | SY | 1,400 | |
| 907-608-C001 | Detectable Warning Panels | SF | 406 | |
| 609-B005 | Concrete Curb, Special Design Header | LF | 3,182 | |
| 609-D001 | Combination Concrete Curb and Gutter Type 1 | LF | 7,560 | |
| 613-D009 | Adjustment of Utility Appurtenance | EA | 58 | 4 |
| 614-B003 | Concrete Driveway, With Reinforcement, 6-inch Thickness | SY | 402 | |
| 616-A001 | Concrete Median and/or Island Pavement, 10-inch | SY | 700 | |
| 616-A004 | Concrete Median and/or Island Pavement, 4-inch | SY | 3,042 | |
| | | | | |
| 618-A001 | Maintenance of Traffic | LS | 1 | |
| 618-B001 | Additional Construction Signs | SF | 1 | |

1. Southeast corner of Martin Luther King, Jr Drive intersection, concrete footings and bases.
2. Includes reconstruction section between Lily and Brown Streets and base for Curb & Gutter Items
3. Includes reconstruction section between Lily and Brown Streets
4. Adjustment of manhole and water valve covers as required.

## SUMMARY OF QUANTITIES (SHEET 2)

| PAY ITEM NO. | PAY ITEM | UNIT | HINDS : 108075-701000 | |
|---|---|---|---|---|
| | | | Prelim | Final |
| 619-A1002 | Temporary Traffic Stripe, Continuous White | LF | 27,580 | |
| 619-A2002 | Temporary Traffic Stripe, Continuous Yellow | LF | 5,900 | |
| 619-A3002 | Temporary Traffic Stripe, Skip White | LF | 4,254 | |
| 619-A4001 | Temporary Traffic Stripe, Skip Yellow | LF | 1,215 | |
| 619-A5001 | Temporary Traffic Stripe, Detail | LF | 6,876 | |
| 619-A6001 | Temporary Traffic Stripe, Legend | SF | 3,074 | |
| 619-F1001 | Concrete Median Barrier, Precast | LF | 1,200 | |
| 619-F1006 | Portable Median Barrier, Less Than or Equal to 45 MPH | LF | 1,200 | |
| 619-J1001 | Impact Attenuator, 40 MPH | EA | 8 | |
| 619-J3001 | Remove and Reset Impact Attenuator | EA | 8 | |
| 620-A001 | Mobilization | LS | 1 | |
| | | | | |
| 907-626-A002 | 4" Thermoplastic Traffic Stripe, Skip White | LF | 9,786 | |
| 907-626-B001 | 4" Thermoplastic Traffic Stripe, Continuous White | LF | 7,771 | |
| 907-626-D001 | 4" Thermoplastic Traffic Stripe, Skip Yellow | LF | 2,367 | |
| 907-626-E001 | 4" Thermoplastic Traffic Stripe, Continuous Yellow | LF | 6,284 | |
| 907-626-G001 | Thermoplastic Detail Stripe, White, 4" Equivalent Length | LF | 2,855 | |
| 907-626-G002 | Thermoplastic Detail Stripe, Yellow, 4" Equivalent Length | LF | 216 | |
| 907-626-H004 | Thermoplastic Legend, White, 4" Equivalent Length | LF | 6,792 | |
| 907-626-H005 | Thermoplastic Legend, White, 4" Equivalent Length | SF | 712 | |
| 627-K001 | Red-Clear Reflective High Performance Raised Markers | EA | 320 | |
| 627-L001 | Two-Way Yellow Reflective High Performance Raised Markers | EA | 361 | |
| 630-C003 | Steel U-Section Posts, 3.0 lb/ft | LF | 100 | |
| 907-630-O006 | Remove and Reset Signs, Ground Mounted | EA | 5 | |
| | | | | |
| 630-A001 | Standard Roadside Signs, Sheet Aluminum, 0.080" Thickness | SF | 28 | |
| 630-A003 | Standard Roadside Signs, Sheet Aluminum, 0.125" Thickness | SF | 64 | |
| | | | | |
| 907-632-C001 | Modify Existing Traffic Signal Cabinet Assembly | EA | 1 | |
| 907-632-D001 | Solid State Traffic Actuated Controller, Type 1 | EA | 1 | |
| 907-634-A545 | Traffic Signal Equipment Pole, Type VI, 8' Shaft | EA | 1 | |
| 907-634-C001 | Pole Foundations, Class "B" Concrete | CY | 1 | |
| 907-636-B014 | Electric Cable, Underground in Conduit, IMSA 20-1, AWG 14, 5 Conductor | LF | 1,500 | |
| 907-641-A002 | Signal Stop Bar Radar Vehicle Detection Sensor, Type 2 | EA | 4 | |
| 907-641-D001 | Radar Vehicle Detection Cable | LF | 750 | |
| 907-645-B001 | Accessible Pedestrian Detection Assembly | EA | 9 | |
| 686-A001 | Relocation of Existing Lighting Assemblies | EA | 1 | |
| | | | | |
| 699-A001 | Roadway Construction Stakes | LS | 1 | |


SOL
Engineering Services, LLC
106 SOUTH PRESIDENT STREET
4th FLOOR
JACKSON, MS 39201
Phone: (601) 961-1415
Fax: (601) 960-0420
Web: www.solengrs.com



NOTICE TO DRAWING HOLDER

THE ENGINEER HAS PREPARED AND FURNISHED THIS DRAWINGS TO THE OWNER FOR USE ON THIS PROJECT ONLY AND ARE NOT TO BE USED ON OTHER PROJECTS OR EXTENSIONS OF THIS PROJECT OR ON ANY OTHER PROJECT, ANY REUSE OF THIS DRAWING, WITHOUT WRITTEN AGREEMENT BY THE ENGINEER, SHALL BE AT THE REUSER'S SOLE RISK AND THE REUSER SHALL INDEMNIFY AND HOLD HARMLESS THE ENGINEER.


MILL AND OVERLAY
WOODROW WILSON DRIVE
JACKSON, MS.

| NO. | DATE | REVISION | BY | APVD |
|---|---|---|---|---|
| 6 | | | | |
| 5 | | | | |
| 4 | | | | |
| 3 | | | | |
| 2 | | | | |
| 1 | | | | |

DSGN BY: JT
DRAWN BY: ML
CHECKED BY:
APPROVED BY:

SCALE: NTS
PROJECT NO: 108075
FILENAME:
DATE: 07/2022
SURVEYED BY: RT
SHEET TITLE
SQ
WORKING NUMBER
SQ

## SUMMARY OF PAVEMENT MARKINGS

| WK. SH. NO. | STATION TO STATION | | THERMOPLASTIC | | | | | | | | MARKERS | | | | | | | | |
|---|---|---|---|---|---|---|---|---|---|---|---|---|---|---|---|---|---|---|---|
| | | | CONTINOUS | | | | | | SKIP | SKIP | RED | YELLOW | | LEGEND | | LEGEND | DETAIL | SKIP | REMARKS |
| | | | WHITE 1 | YELLOW 2 | WHITE 8 | WHITE 5 | YELLOW 6 | | WHITE 3 | YELLOW 4 | CLEAR 9 | 1 WAY | 2 WAY 10 | WHITE 11 | WHITE 7 | TOTAL* | | | |
| PM1 | B.O.P. | 19+05 | 1282 | 1941 | 82 | 552 | 102 | | 1810 | 360 | 46 | | 88 | 570 | 190 | | | | |
| PM2 | 19+05 | 30+45 | 2015 | 1950 | 180 | 210 | – | | 2280 | 1874 | 60 | | 145 | | 64 | | | | |
| PM3 | 30+45 | 41+85 | 1962 | 781 | 204 | 682 | – | | 2280 | 133 | 114 | | 56 | 260 | 171 | | | | |
| PM4 | 41+85 | 53+25 | 1675 | 325 | 131 | 1095 | – | | 2280 | – | 87 | | 12 | 180 | 237 | | | | |
| PM5 | 53+25 | E.O.P. | 837 | 1287 | 115 | 316 | 114 | | 1136 | – | 43 | | 48 | | 70 | | | | |
| | UNITS | | L.F. | L.F. | S.F. | L.F. | L.F. | | L.F. | L.F. | EACH | EACH | EACH | S.F. | L.F. | L.F. | | | |
| | TOTALS | | 7771 | 6284 | 712 | 2855 | 216 | | 9786 | 2367 | 320 | | 361 | (1010) | (732) | 6792 | | | |

* TOTAL OF (7) AT 6" EQUIVALENT LENGTH AND (11) FOR TOTAL ESTIMATED QUANTITY.

## REMOVAL ITEMS

| WK. SH. NO. | STATION TO STATION | | CONCRETE ITEMS | | | ASPHALT MILLING | BASE FAILURE | OBSTRUCTIONS | PIPES (ALL TYPES) | REMARKS |
|---|---|---|---|---|---|---|---|---|---|---|
| | | | PAVING | SIDEWALK | CURB + GUTTER | | | | | |
| DEMO1 | B.O.P. | 19+05 | 312 | 354 | 1411 | | | | | |
| DEMO2 | 19+05 | 30+45 | 115 | 426 | 1758 | | | | | |
| DEMO3 | 30+45 | 41+85 | 415 | 254 | 3169 | | | | | |
| DEMO4 | 41+85 | 53+25 | 486 | 430 | 2916 | | | | | |
| DEMO5 | 53+25 | E.O.P. | 35 | 36 | 1091 | | | | | |
| | UNITS | | SQ. YDS. | SQ. YDS. | LF | TON | SQ. YDS. | LS | LIN. FT. | |
| | TOTALS | | | 1500 | 10345 | | | | | |

| SYMBOL | DESCRIPTION | TYPE |
|---|---|---|
| (1) | TRAFFIC STRIPE (CONT. WHITE) | PLASTIC |
| (2) | TRAFFIC STRIPE (CONT. YELLOW) | PLASTIC |
| (3) | TRAFFIC STRIPE (SKIP WHITE) | PLASTIC |
| (4) | TRAFFIC STRIPE (SKIP YELLOW) | PLASTIC |
| (5) | DETAIL STRIPE (4" EQ. LENGTH) (WHITE) | PLASTIC |
| (6) | DETAIL STRIPE (4" EQ. LENGTH) (YELLOW) | PLASTIC |
| (7) | LEGEND (WHITE) (STOP BAR)(4" EQ. LENGTH) | PLASTIC |
| (8) | LEGEND (WHITE) | PLASTIC |
| (9) | RED-CLEAR REFLECTIVE RAISED MARKERS | ——— |
| (10) | TWO-WAY YELLOW REFLEC. RAISED MARKERS | ——— |
| (11) | LEGEND (SF) (WHITE) | PLASTIC |
| | | |

## ESTIMATED EARTHWORK QUANTITIES

| SHEET | CUT | FILL | BORROW (B17) | UNCLASIFIED EXCAVATION | SOLID SODDING | EXCAVATION | | REMARKS |
|---|---|---|---|---|---|---|---|---|
| | | | | | | EXCESS | SURPLUS | |
| PROP1 | | | | | | | | |
| PROP2 | | | 685 | | | 930 | | FM |
| PROP3 | | | | | 63 | | | |
| PROP4 | | | | | 57 | | | |
| PROP5 | | | | | 20 | | | |
| UNITS | CU. YDS. | CU. YDS. | CU. YDS. | CU. YDS. | SQ. YDS. | CU. YDS. | | |
| SUB-TOTAL | | | 685 | | 140 | 930 | | |

## SIGNAGE REQUIRED

| SHEET | R1-2 | W3-1 |
|---|---|---|
| PM1 | 1 | 1 |
| PM2 | | 3 |
| PM3 | | |
| PM4 | 3 | |
| PM5 | | |
| TOTAL | 4 | 4 |
| UNIT | 6.93sf | 16sf |
| TOTAL SF | 28 | 64 |

## REQUIRED BASE AND PAVEMENT QUANTITIES

| ALIGNMENT | | Crushed Stone Base | Geotextile Stabilization, Type V (Non-Woven) | Asphalt For Tack Coat | 12.5-mm MT, Asphalt Pavement | 19-mm MT, Asphalt Pavement Leveling | Dowels, Drilled and Installed | Curb and Gutter 6" Crushed Stone Base Compacted |
|---|---|---|---|---|---|---|---|---|
| ITEM NO. | | 304-F001 | 209-A005 | 407-A001 | 403-A002 | 403-A008 | | 403-F001 |
| UNIT | | TON | SQ YD | GALLON | TON | TON | | CY |
| RATE | | | | | | | | |
| THICKNESS (IN) | | | | | | | | |
| LEGEND NUMBER | | | | | | | | |
| PROP 1 | | 92 | | 1069 | 1581 | | | 63 |
| PROP 2 | | 640 | 1400 | 1272 | 1880 | 500 | | 306 |
| PROP 3 | | 170 | | 327 | 2032 | | 668 | 87 |
| PROP 4 | | 153 | | 848 | 1569 | | 530 | 80 |
| PROP 5 | | 68 | | 274 | 507 | | 73 | 39 |
| TOTAL | | 1123 | 1400 | 3790 | 7569 | 500 | 1271 | 633 |
| | | | | | (7600) | | | |


SOL
Engineering Services, LLC
106 SOUTH PRESIDENT STREET
4th FLOOR
JACKSON, MS 39201
Phone: (601) 961-1415
Fax: (601) 960-0420
Web: www.solengrs.com



NOTICE TO DRAWING HOLDER

THE ENGINEER HAS PREPARED AND FURNISHED THIS DRAWINGS TO THE OWNER FOR USE ON THIS PROJECT ONLY AND ARE NOT TO BE USED ON OTHER PROJECTS OR EXTENSIONS OF THIS PROJECT OR ON ANY OTHER PROJECT, ANY REUSE OF THIS DRAWING, WITHOUT WRITTEN AGREEMENT BY THE ENGINEER, SHALL BE AT THE REUSER'S SOLE RISK AND THE REUSER SHALL INDEMNIFY AND HOLD HARMLESS THE ENGINEER.


MILL AND OVERLAY
WOODROW WILSON DRIVE
JACKSON, MS.

| NO. | DATE | REVISION | BY | APVD |
|---|---|---|---|---|
| 1 | | | | |
| 2 | | | | |
| 3 | | | | |
| 4 | | | | |
| 5 | | | | |
| 6 | | | | |

DSGN BY: JT
DRAWN BY: VIL
CHECKED BY:
APPROVED BY:

SCALE: NTS
PROJECT NO: 108075
FILENAME:
DATE: 07/2022
SURVEYED BY: RT
SHEET TITLE: SQ
WORKING NUMBER: RECAP

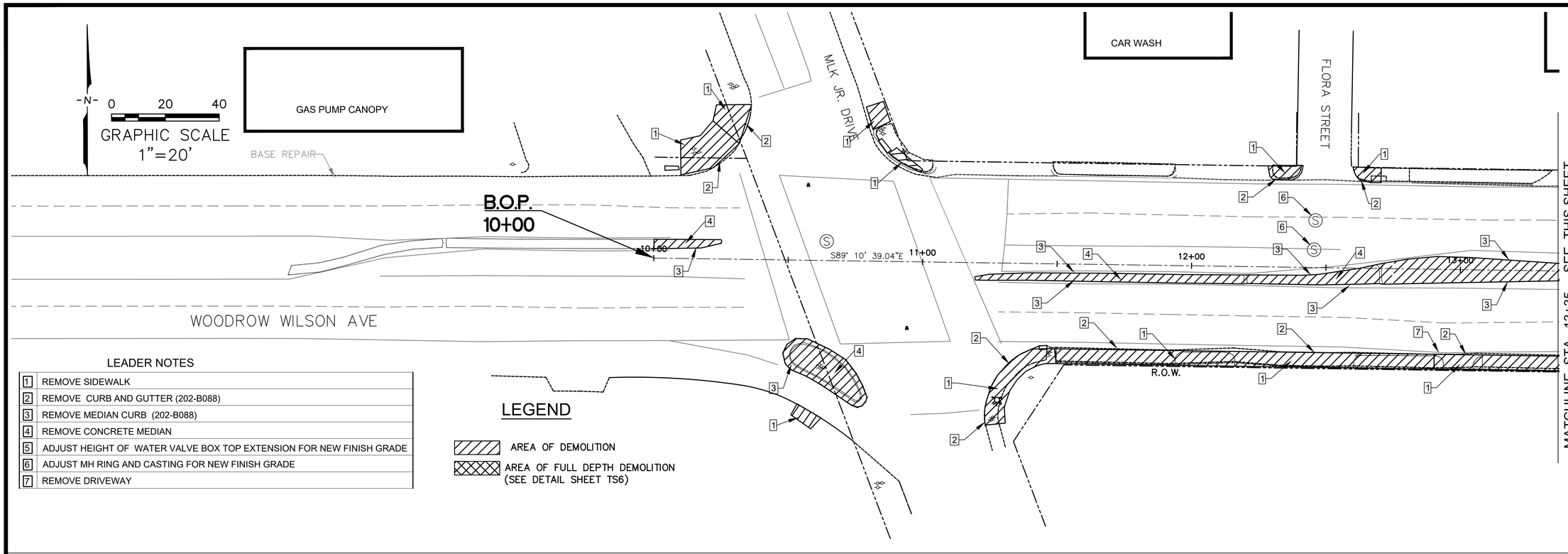


LEADER NOTES

| | |
|---|---|
| 1 | REMOVE SIDEWALK |
| 2 | REMOVE CURB AND GUTTER (202-B088) |
| 3 | REMOVE MEDIAN CURB (202-B088) |
| 4 | REMOVE CONCRETE MEDIAN |
| 5 | ADJUST HEIGHT OF WATER VALVE BOX TOP EXTENSION FOR NEW FINISH GRADE |
| 6 | ADJUST MH RING AND CASTING FOR NEW FINISH GRADE |
| 7 | REMOVE DRIVEWAY |

LEGEND

AREA OF DEMOLITION

AREA OF FULL DEPTH DEMOLITION (SEE DETAIL SHEET TS6)

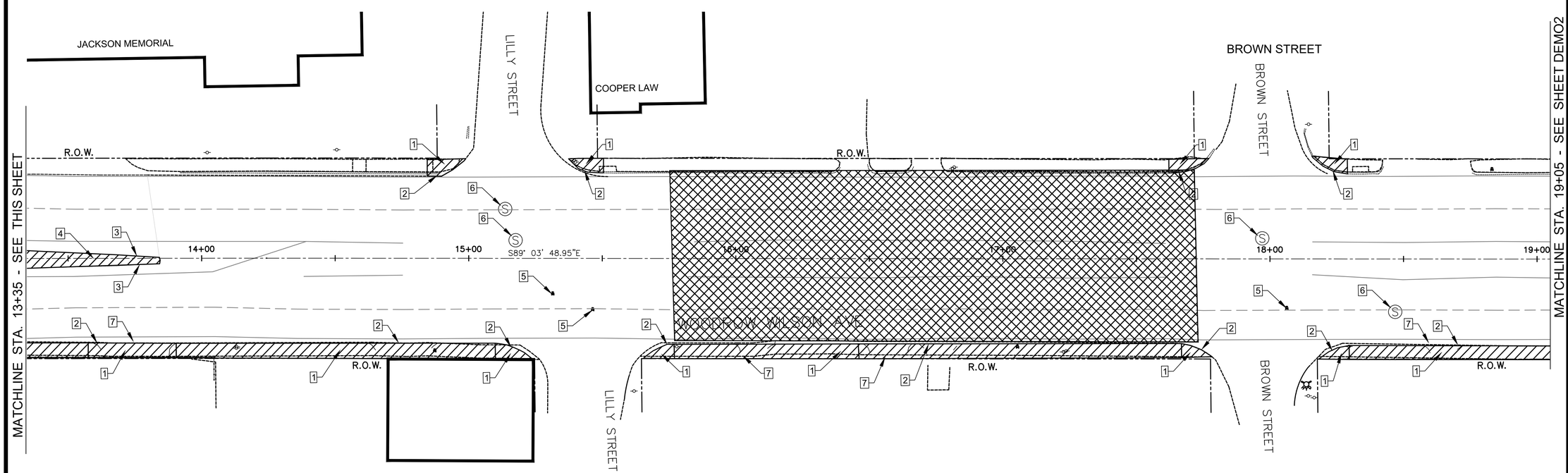



SOL Engineering Services, LLC
106 SOUTH PRESIDENT STREET
4th FLOOR
JACKSON, MS 39201
Phone: (601) 961-1415
Fax: (601) 960-0420
Web: www.solengrs.com



NOTICE TO DRAWING HOLDER

THE ENGINEER HAS PREPARED AND FURNISHED THIS DRAWINGS TO THE OWNER FOR USE ON THIS PROJECT ONLY AND ARE NOT TO BE USED ON OTHER PROJECTS OR EXTENSIONS OF THIS PROJECT OR ON ANY OTHER PROJECT. ANY REUSE OF THIS DRAWING, WITHOUT WRITTEN AGREEMENT BY THE ENGINEER, SHALL BE AT THE REUSER'S SOLE RISK AND THE REUSER SHALL INDEMNIFY AND HOLD HARMLESS THE ENGINEER.


MILL AND OVERLAY
WOODROW WILSON DRIVE
JACKSON, MS.

| NO. | DATE | REVISION | BY | APV'D |
|---|---|---|---|---|
| 6 | | | | |
| 5 | | | | |
| 4 | | | | |
| 3 | | | | |
| 2 | | | | |
| 1 | | | | |

DSGN BY: JT
DRAWN BY: WL
CHECKED BY:
APPROVED BY:

SCALE: NTS
PROJECT NO: 108075
FILENAME:
DATE: 07/2022
SURVEYED BY: RT
SHEET TITLE
DEMOLITION
WORKING NUMBER
DEMO1

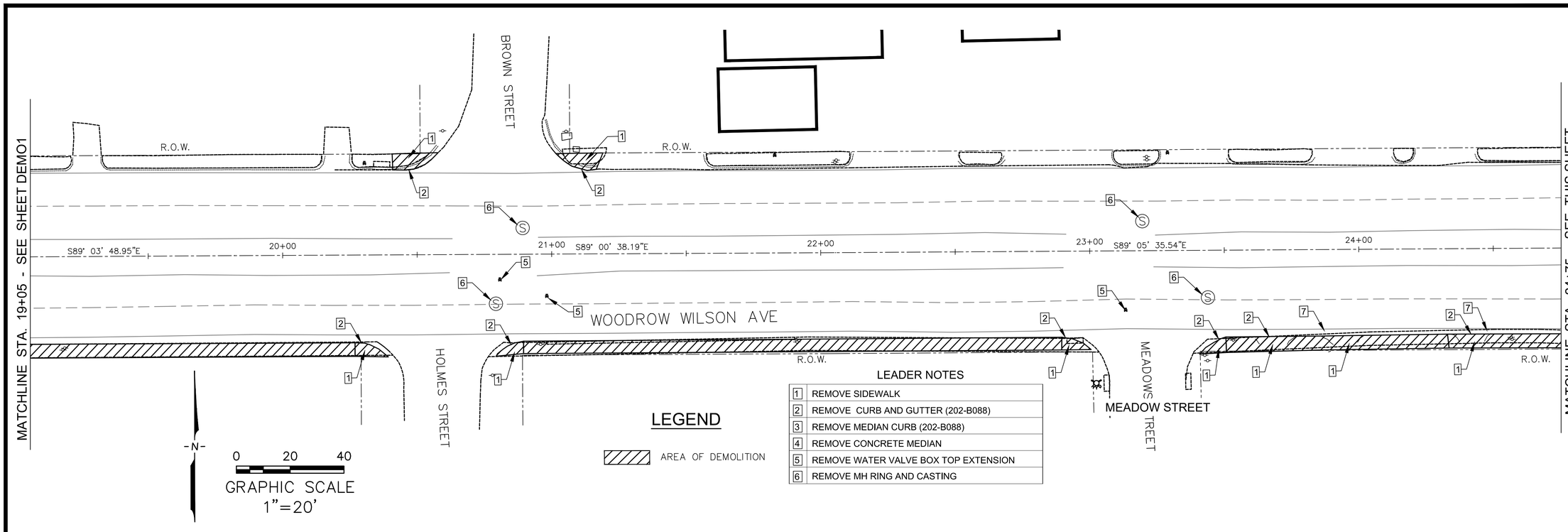


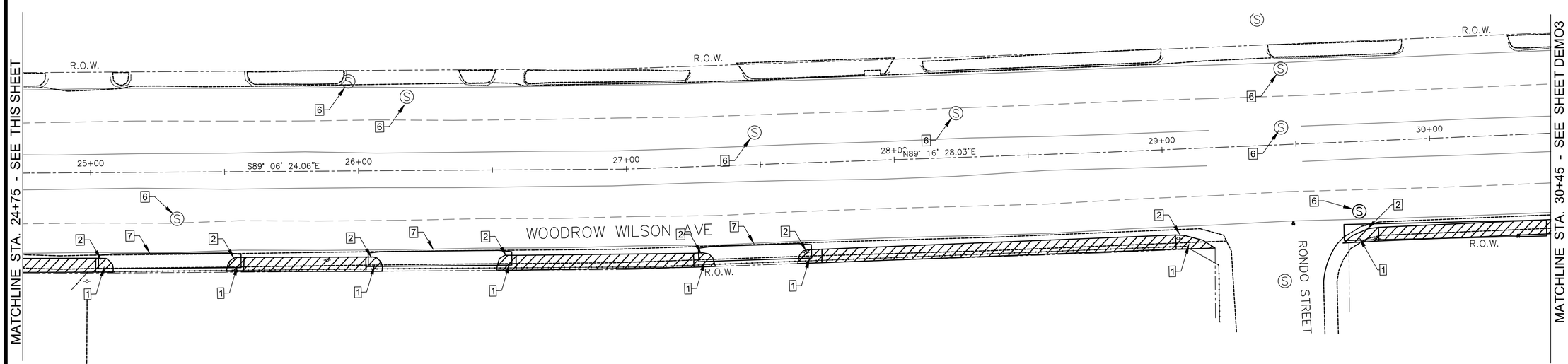



SOL Engineering Services, LLC
106 SOUTH PRESIDENT STREET
4th FLOOR
JACKSON, MS 39201
Phone: (601) 961-1415
Fax: (601) 960-0420
Web: www.solengrs.com



NOTICE TO DRAWING HOLDER

THE ENGINEER HAS PREPARED AND FURNISHED THIS DRAWINGS TO THE OWNER FOR USE ON THIS PROJECT ONLY AND ARE NOT TO BE USED ON OTHER PROJECTS OR EXTENSIONS OF THIS PROJECT OR ON ANY OTHER PROJECT. ANY REUSE OF THIS DRAWING, WITHOUT WRITTEN AGREEMENT BY THE ENGINEER, SHALL BE AT THE REUSER'S SOLE RISK AND THE REUSER SHALL INDEMNIFY AND HOLD HARMLESS THE ENGINEER.


MILL AND OVERLAY
WOODROW WILSON DRIVE
JACKSON, MS.

| NO. | DATE | REVISION | BY | APV'D |
|---|---|---|---|---|
| 6 | | | | |
| 5 | | | | |
| 4 | | | | |
| 3 | | | | |
| 2 | | | | |
| 1 | | | | |

DSGN BY: JT
DRAWN BY: ML
CHECKED BY:
APPROVED BY:

SCALE: NTS
PROJECT NO: 108075
FILENAME:
DATE: 07/2022
SURVEYED BY: RT
SHEET TITLE
DEMOLITION
WORKING NUMBER
DEMO2

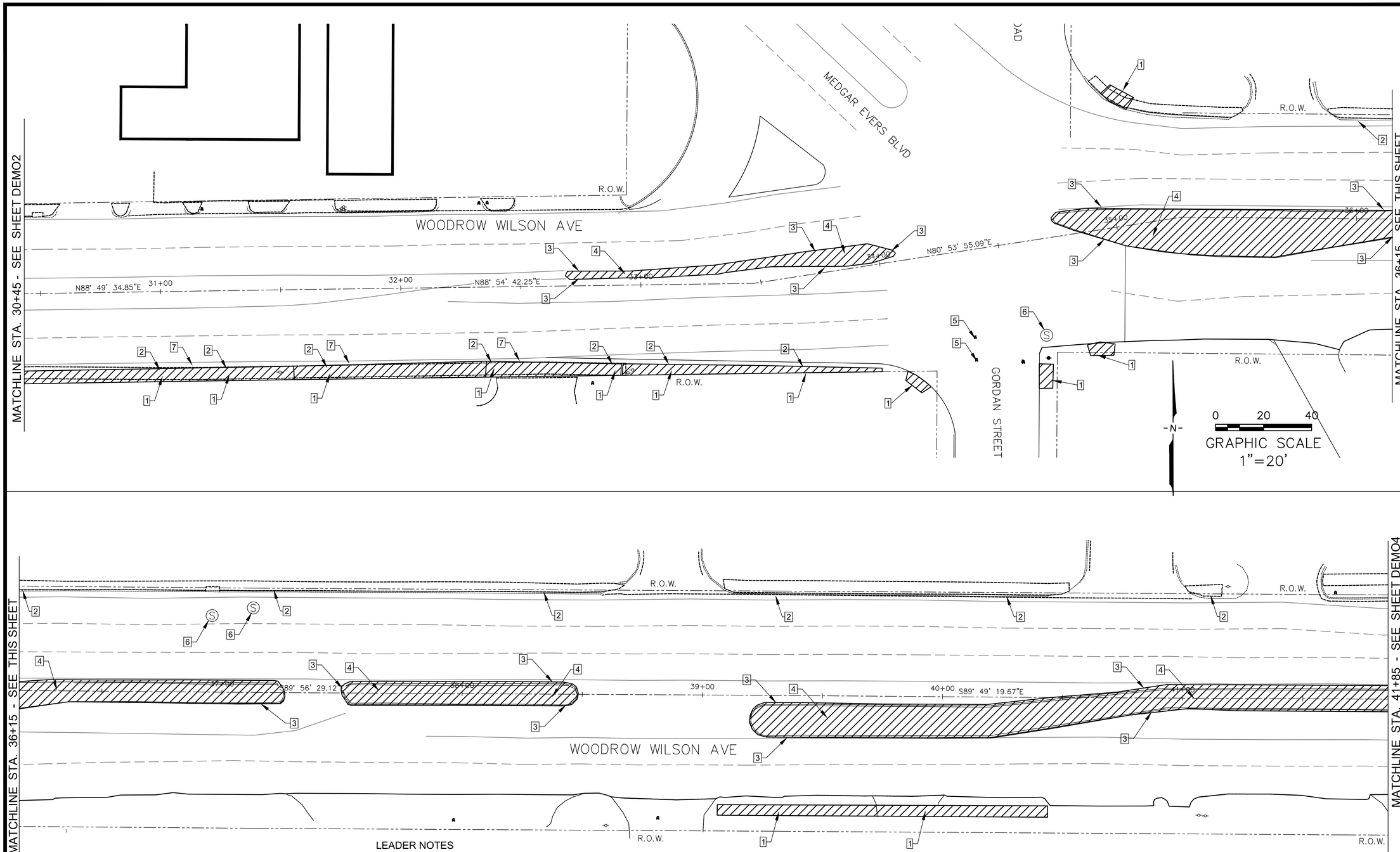


## LEGEND

AREA OF DEMOLITION

### LEADER NOTES

| | |
|---|---|
| 1 | REMOVE SIDEWALK |
| 2 | REMOVE CURB AND GUTTER (202-B088) |
| 3 | REMOVE MEDIAN CURB (202-B088) |
| 4 | REMOVE CONCRETE MEDIAN |
| 5 | REMOVE WATER VALVE BOX TOP EXTENSION |
| 6 | REMOVE MH RING AND CASTING |


SOL Engineering Services, LLC
106 SOUTH PRESIDENT STREET
4th FLOOR
JACKSON, MS 39201
Phone: (601) 961-1415
Fax: (601) 960-0420
Web: www.solengrs.com



NOTICE TO DRAWING HOLDER

THE ENGINEER HAS PREPARED AND FURNISHED THIS DRAWINGS TO THE OWNER FOR USE ON THIS PROJECT ONLY AND ARE NOT TO BE USED ON OTHER PROJECTS OR EXTENSIONS OF THIS PROJECT OR ON ANY OTHER PROJECT. ANY REUSE OF THIS DRAWING, WITHOUT WRITTEN AGREEMENT BY THE ENGINEER, SHALL BE AT THE REUSER'S SOLE RISK AND THE REUSER SHALL INDEMNIFY AND HOLD HARMLESS THE ENGINEER.


MILL AND OVERLAY
WOODROW WILSON DRIVE
JACKSON, MS.

| NO. | DATE | REVISION | BY | APVD |
|---|---|---|---|---|
| 6 | | | | |
| 5 | | | | |
| 4 | | | | |
| 3 | | | | |
| 2 | | | | |
| 1 | | | | |

DSGN BY: JT
DRAWN BY: ML
CHECKED BY:
APPROVED BY:

SCALE: NTS
PROJECT NO: 108075
FILENAME:
DATE: 07/2022
SURVEYED BY: RT
SHEET TITLE
DEMOLITION
WORKING NUMBER
DEMO3

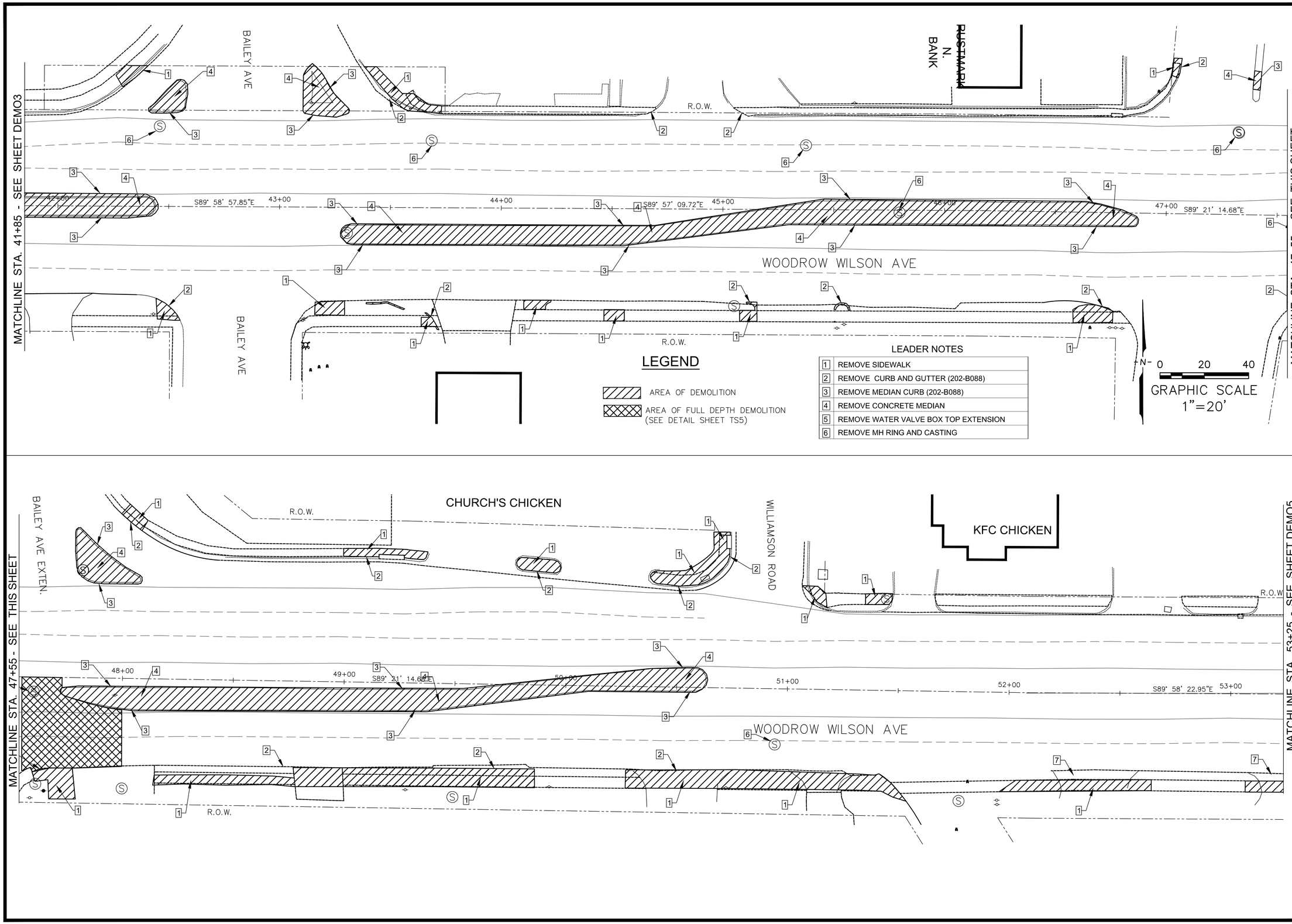


## LEGEND

- AREA OF DEMOLITION
- AREA OF FULL DEPTH DEMOLITION (SEE DETAIL SHEET TS5)

## LEADER NOTES

| | |
|---|---|
| 1 | REMOVE SIDEWALK |
| 2 | REMOVE CURB AND GUTTER (202-B088) |
| 3 | REMOVE MEDIAN CURB (202-B088) |
| 4 | REMOVE CONCRETE MEDIAN |
| 5 | REMOVE WATER VALVE BOX TOP EXTENSION |
| 6 | REMOVE MH RING AND CASTING |


SOL Engineering Services, LLC
106 SOUTH PRESIDENT STREET
4th FLOOR
JACKSON, MS 39201
Phone: (601) 961-1415
Fax: (601) 960-0420
Web: www.solengrs.com



NOTICE TO DRAWING HOLDER

THE ENGINEER HAS PREPARED AND FURNISHED THIS DRAWINGS TO THE OWNER FOR USE ON THIS PROJECT ONLY AND ARE NOT TO BE USED ON OTHER PROJECTS OR EXTENSIONS OF THIS PROJECT OR ON ANY OTHER PROJECT. ANY REUSE OF THIS DRAWING, WITHOUT WRITTEN AGREEMENT BY THE ENGINEER, SHALL BE AT THE REUSER'S SOLE RISK AND THE REUSER SHALL INDEMNIFY AND HOLD HARMLESS THE ENGINEER.


MILL AND OVERLAY
WOODROW WILSON DRIVE
JACKSON, MS.

| NO. | DATE | REVISION | BY | APVD |
|---|---|---|---|---|
| 1 | | | | |
| 2 | | | | |
| 3 | | | | |
| 4 | | | | |
| 5 | | | | |
| 6 | | | | |

DSGN BY: JT
DRAWN BY: ML
CHECKED BY:
APPROVED BY:

SCALE: NTS
PROJECT NO: 108075
FILENAME:
DATE: 07/2022
SURVEYED BY: RT
SHEET TITLE
DEMOLITION
WORKING NUMBER
DEMO4

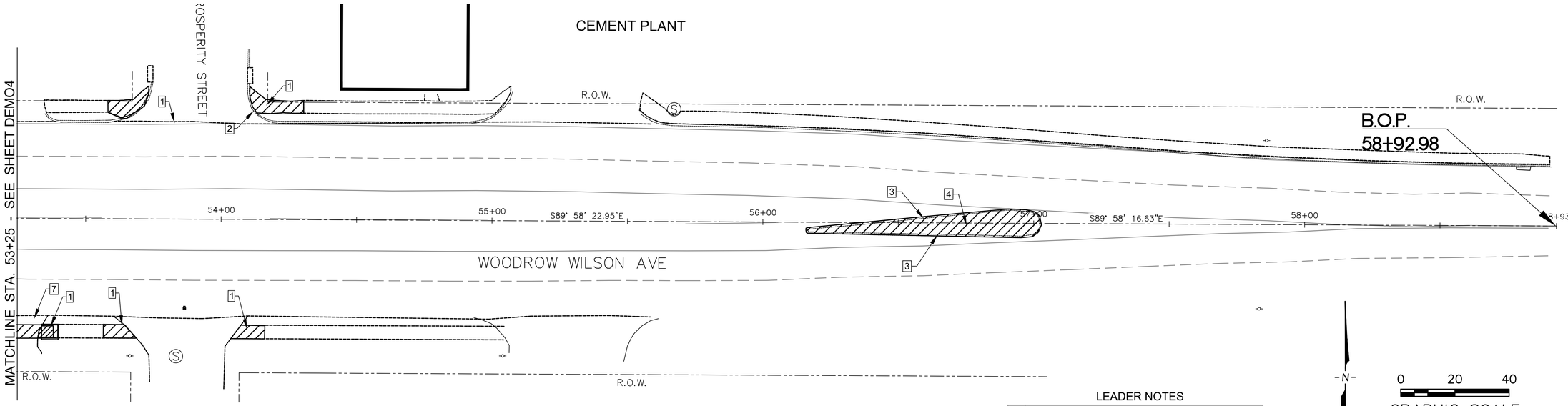


-N-

0 20 40

GRAPHIC SCALE
1"=20'

## LEGEND

AREA OF DEMOLITION

### LEADER NOTES

| | |
|---|---|
| 1 | REMOVE SIDEWALK |
| 2 | REMOVE CURB AND GUTTER (202-B088) |
| 3 | REMOVE MEDIAN CURB (202-B088) |
| 4 | REMOVE CONCRETE MEDIAN |
| 5 | REMOVE WATER VALVE BOX TOP EXTENSION |
| 6 | REMOVE MH RING AND CASTING |

SOL
Engineering Services, LLC
106 SOUTH PRESIDENT STREET
4th FLOOR
JACKSON, MS 39201
Phone: (601) 961-1415
Fax: (601) 960-0420
Web: www.solengrs.com

NOTICE TO DRAWING HOLDER

THE ENGINEER HAS PREPARED AND FURNISHED THIS DRAWINGS TO THE OWNER FOR USE ON THIS PROJECT ONLY AND ARE NOT TO BE USED ON OTHER PROJECTS OR EXTENSIONS OF THIS PROJECT OR ON ANY OTHER PROJECT. ANY REUSE OF THIS DRAWING, WITHOUT WRITTEN AGREEMENT BY THE ENGINEER, SHALL BE AT THE REUSER'S SOLE RISK AND THE REUSER SHALL INDEMNIFY AND HOLD HARMLESS THE ENGINEER.

MILL AND OVERLAY
WOODROW WILSON DRIVE
JACKSON, MS.

| NO. | DATE | REVISION | BY | APV'D |
|---|---|---|---|---|
| 1 | | | | |
| 2 | | | | |
| 3 | | | | |
| 4 | | | | |
| 5 | | | | |
| 6 | | | | |

DSGN BY: JT
DRAWN BY: ML
CHECKED BY:
APPROVED BY:

SCALE: NTS
PROJECT NO: 108075
FILENAME:
DATE: 07/2022
SURVEYED BY: RT
SHEET TITLE
DEMOLITION
WORKING NUMBER
DEM05

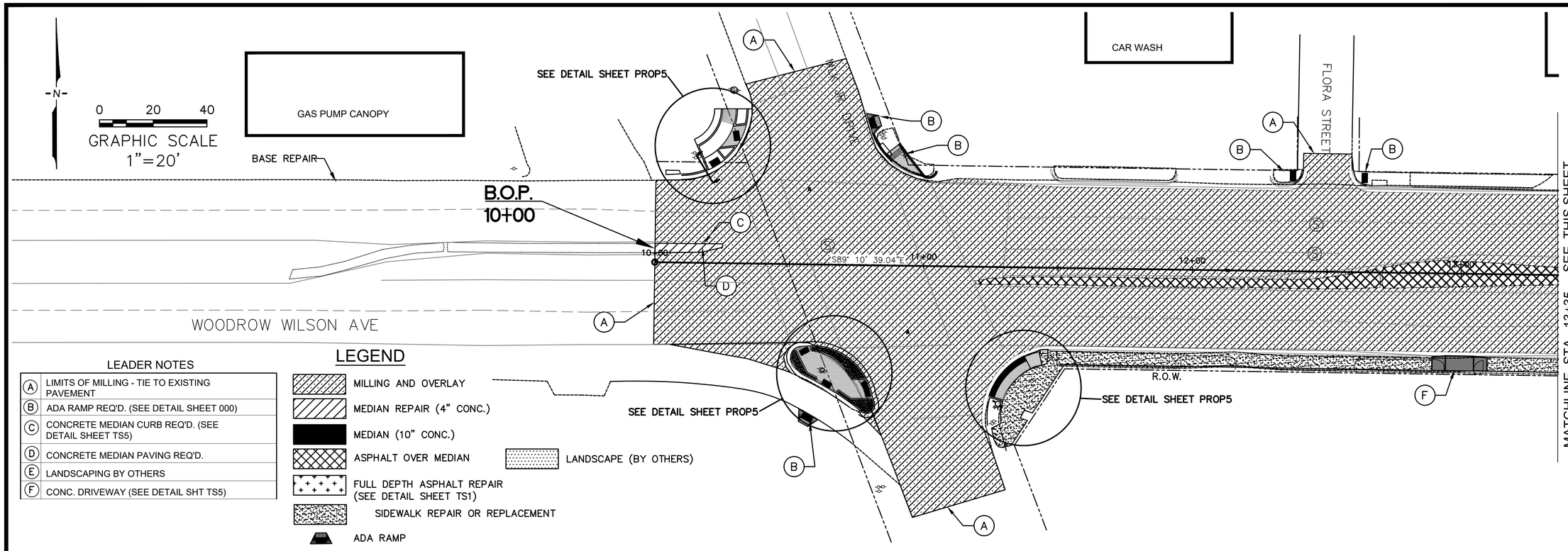


## LEADER NOTES

| | |
|---|---|
| A | LIMITS OF MILLING - TIE TO EXISTING PAVEMENT |
| B | ADA RAMP REQ'D. (SEE DETAIL SHEET 000) |
| C | CONCRETE MEDIAN CURB REQ'D. (SEE DETAIL SHEET TS5) |
| D | CONCRETE MEDIAN PAVING REQ'D. |
| E | LANDSCAPING BY OTHERS |
| F | CONC. DRIVEWAY (SEE DETAIL SHT TS5) |

## LEGEND

- MILLING AND OVERLAY
- MEDIAN REPAIR (4" CONC.)
- MEDIAN (10" CONC.)
- ASPHALT OVER MEDIAN
- FULL DEPTH ASPHALT REPAIR (SEE DETAIL SHEET TS1)
- SIDEWALK REPAIR OR REPLACEMENT
- ADA RAMP
- LANDSCAPE (BY OTHERS)

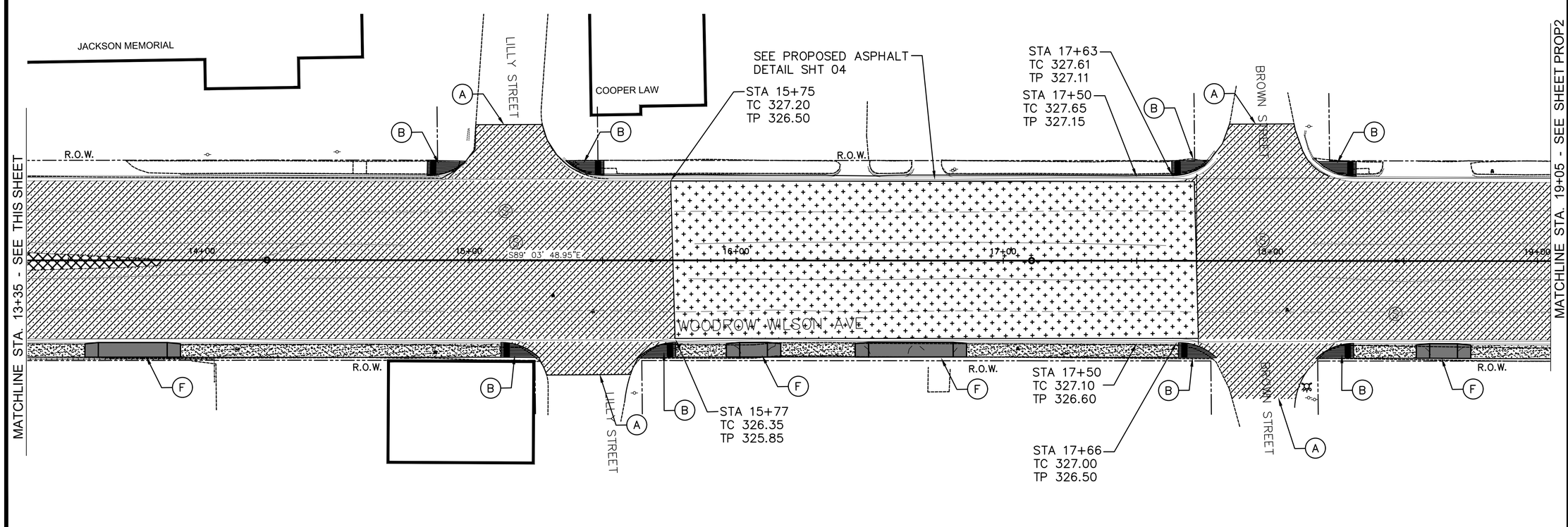



SOL
Engineering Services, LLC
106 SOUTH PRESIDENT STREET
4th FLOOR
JACKSON, MS 39201
Phone: (601) 961-1415
Fax: (601) 960-0420
Web: www.solengrs.com



NOTICE TO DRAWING HOLDER

THE ENGINEER HAS PREPARED AND FURNISHED THIS DRAWINGS TO THE OWNER FOR USE ON THIS PROJECT ONLY AND ARE NOT TO BE USED ON OTHER PROJECTS OR EXTENSIONS OF THIS PROJECT OR ON ANY OTHER PROJECT. ANY REUSE OF THIS DRAWING, WITHOUT WRITTEN AGREEMENT BY THE ENGINEER, SHALL BE AT THE REUSER'S SOLE RISK AND THE REUSER SHALL INDEMNIFY AND HOLD HARMLESS THE ENGINEER.


# MILL AND OVERLAY
# WOODROW WILSON DRIVE
# JACKSON, MS.

| NO | DATE | REVISION | DRAWN BY: | CHECKED BY: | APPROVED BY: | BY | APVD |
|---|---|---|---|---|---|---|---|
| 6 | | | | | | | |
| 5 | | | | | | | |
| 4 | | | | | | | |
| 3 | | | | | | | |
| 2 | | | | | | | |
| 1 | | | | | | | |

DSGN BY: JT

SCALE: NTS

PROJECT NO:108075

FILENAME:

DATE: 07/2022

SURVEYED BY: RT

SHEET TITLE
PROPOSED IMPROVEMENTS

WORKING NUMBER
PROP1

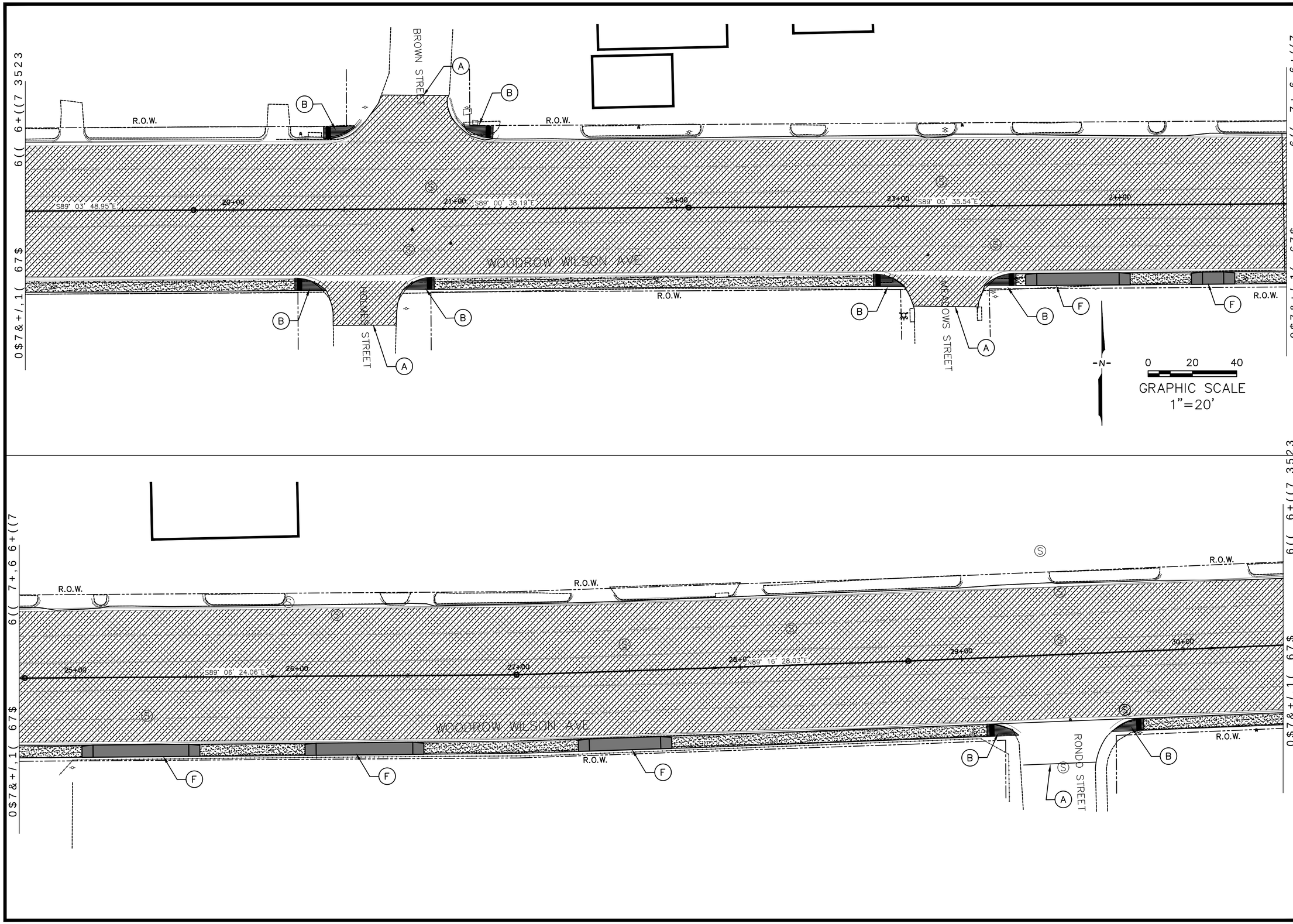



SOL Engineering Services, LLC
106 SOUTH PRESIDENT STREET
4th FLOOR
JACKSON, MS 39201
Phone: (601) 961-1415
Fax: (601) 960-0420
Web: www.solengrs.com



NOTICE TO DRAWING HOLDER

THE ENGINEER HAS PREPARED AND FURNISHED THIS DRAWINGS TO THE OWNER FOR USE ON THIS PROJECT ONLY AND ARE NOT TO BE USED ON OTHER PROJECTS OR EXTENSIONS OF THIS PROJECT OR ON ANY OTHER PROJECT. ANY REUSE OF THIS DRAWING, WITHOUT WRITTEN AGREEMENT BY THE ENGINEER, SHALL BE AT THE REUSER'S SOLE RISK AND THE REUSER SHALL INDEMNIFY AND HOLD HARMLESS THE ENGINEER.


# MILL AND OVERLAY
# WOODROW WILSON DRIVE
# JACKSON, MS.

| NO | DATE | REVISION | BY | APVD |
|---|---|---|---|---|
| 6 | | | | |
| 5 | | | | |
| 4 | | | | |
| 3 | | | | |
| 2 | | | | |
| 1 | | | | |

DSGN BY: JT
DRAWN BY: WL
CHECKED BY:
APPROVED BY:

SCALE: NTS
PROJECT NO: 108075
FILENAME:
DATE: 07/2022
SURVEYED BY: RT
SHEET TITLE
PROPOSED IMPROVEMENTS
WORKING NUMBER
PROP2

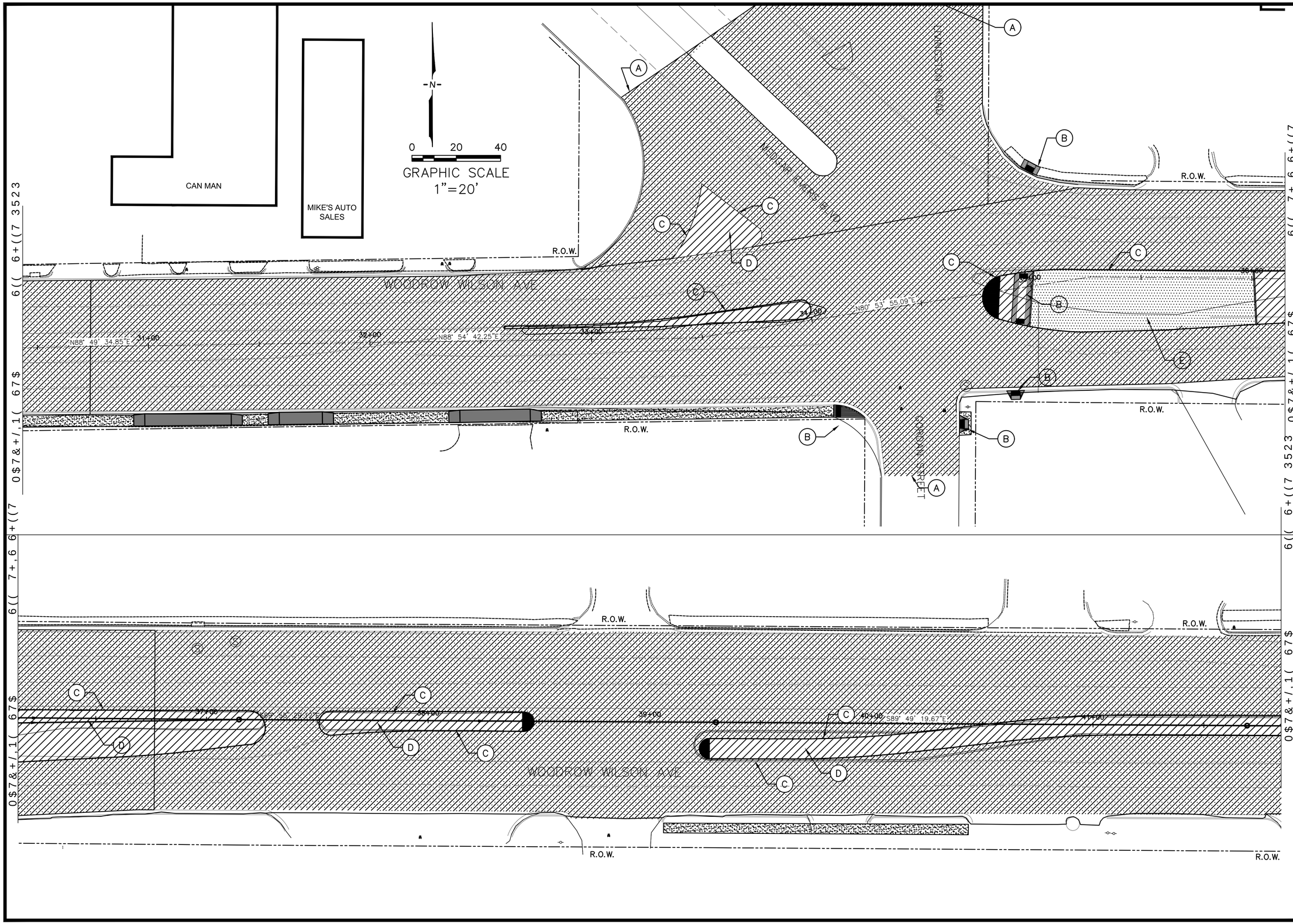



Engineering Services, LLC
106 SOUTH PRESIDENT STREET
4th FLOOR
JACKSON, MS 39201
Phone: (601) 961-1415
Fax: (601) 960-0420
Web: www.solengrs.com



NOTICE TO DRAWING HOLDER

THE ENGINEER HAS PREPARED AND FURNISHED THIS DRAWINGS TO THE OWNER FOR USE ON THIS PROJECT ONLY AND ARE NOT TO BE USED ON OTHER PROJECTS OR EXTENSIONS OF THIS PROJECT OR ON ANY OTHER PROJECT. ANY REUSE OF THIS DRAWING, WITHOUT WRITTEN AGREEMENT BY THE ENGINEER, SHALL BE AT THE REUSER'S SOLE RISK AND THE REUSER SHALL INDEMNIFY AND HOLD HARMLESS THE ENGINEER.


# MILL AND OVERLAY
# WOODROW WILSON DRIVE
# JACKSON, MS.

| NO. | DATE | REVISION | BY | APVD |
|---|---|---|---|---|
| 6 | | | | |
| 5 | | | | |
| 4 | | | | |
| 3 | | | | |
| 2 | | | | |
| 1 | | | | |

DSGN BY: JT
DRAWN BY: WIL
CHECKED BY:
APPROVED BY:

SCALE: NTS
PROJECT NO: 108075
FILENAME:
DATE: 07/2022
SURVEYED BY: RT
SHEET TITLE
PROPOSED IMPROVEMENTS
WORKING NUMBER
PROP3

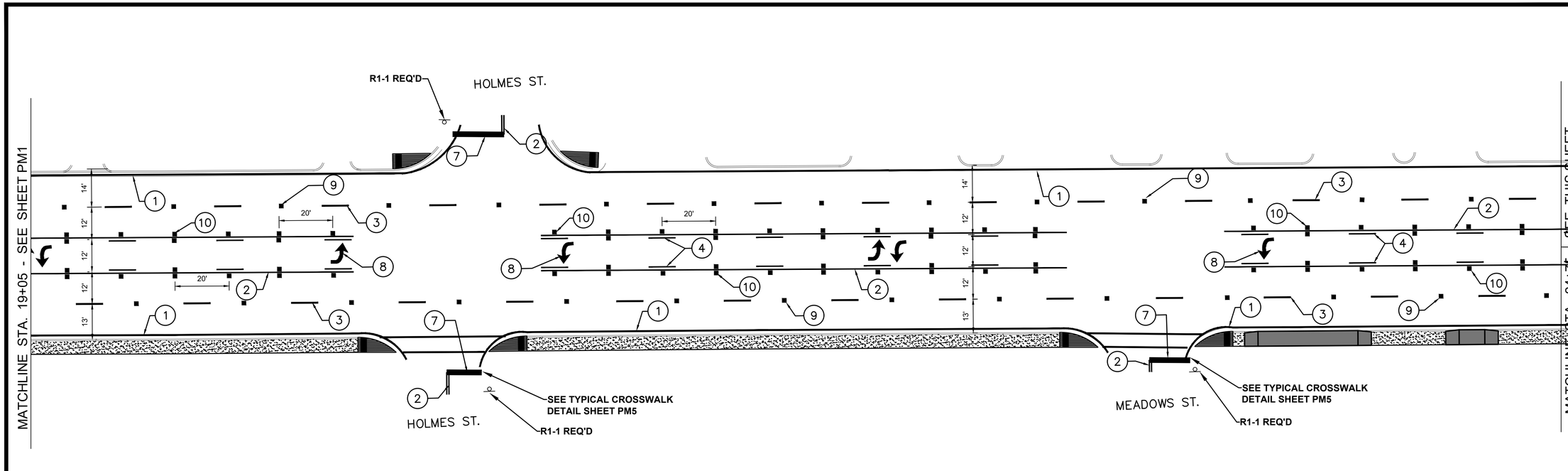


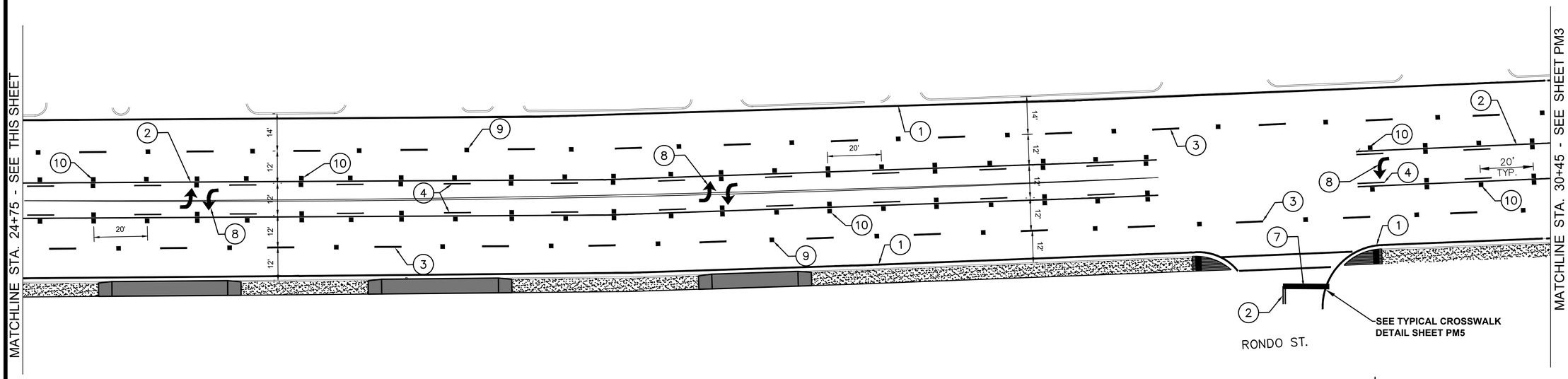


| SYMBOL | DESCRIPTION | TYPE |
|---|---|---|
| 1 | TRAFFIC STRIPE (CONT. WHITE) | PLASTIC |
| 2 | TRAFFIC STRIPE (CONT. YELLOW) | PLASTIC |
| 3 | TRAFFIC STRIPE (SKIP WHITE)(10' @ 30' SPACING) | PLASTIC |
| 4 | TRAFFIC STRIPE (SKIP YELLOW) | PLASTIC |
| 5 | DETAIL STRIPE (4" EQ. LENGTH) (WHITE) | PLASTIC |
| 6 | DETAIL STRIPE (4" EQ. LENGTH) (YELLOW) | PLASTIC |
| 7 | LEGEND (WHITE) (STOP BAR)(4" EQ. LENGTH) | PLASTIC |
| 8 | LEGEND (WHITE) | PLASTIC |
| 9 | RED-CLEAR REFLECTIVE RAISED MARKERS | ——— |
| 10 | TWO-WAY YELLOW REFLEC. RAISED MARKERS | ——— |
| 11 | DETAIL STRIPE (SF) (WHITE) | PLASTIC |
| | | |

-N-

0 20 40

GRAPHIC SCALE
1"=20'


SOL
Engineering Services, LLC
106 SOUTH PRESIDENT STREET
4th FLOOR
JACKSON, MS 39201
Phone: (601) 961-1415
Fax: (601) 960-0420
Web: www.solengrs.com



NOTICE TO DRAWING HOLDER

THE ENGINEER HAS PREPARED AND FURNISHED THIS DRAWINGS TO THE OWNER FOR USE ON THIS PROJECT ONLY AND ARE NOT TO BE USED ON OTHER PROJECTS OR EXTENSIONS OF THIS PROJECT OR ON ANY OTHER PROJECT. ANY REUSE OF THIS DRAWING, WITHOUT WRITTEN AGREEMENT BY THE ENGINEER, SHALL BE AT THE REUSER'S SOLE RISK AND THE REUSER SHALL INDEMNIFY AND HOLD HARMLESS THE ENGINEER.


MILL AND OVERLAY
WOODROW WILSON DRIVE
JACKSON, MS.

| NO. | DATE | REVISION | BY | APVD |
|---|---|---|---|---|
| 6 | | | | |
| 5 | | | | |
| 4 | | | | |
| 3 | | | | |
| 2 | | | | |
| 1 | | | | |

DSGN BY: JT
DRAWN BY: ML
CHECKED BY:
APPROVED BY:

SCALE: 1"=20'
PROJECT NO:108075
FILENAME:
DATE: 07/2022
SURVEYED BY: RT
SHEET TITLE
PAVEMENT MARKING
WORKING NUMBER
PM2

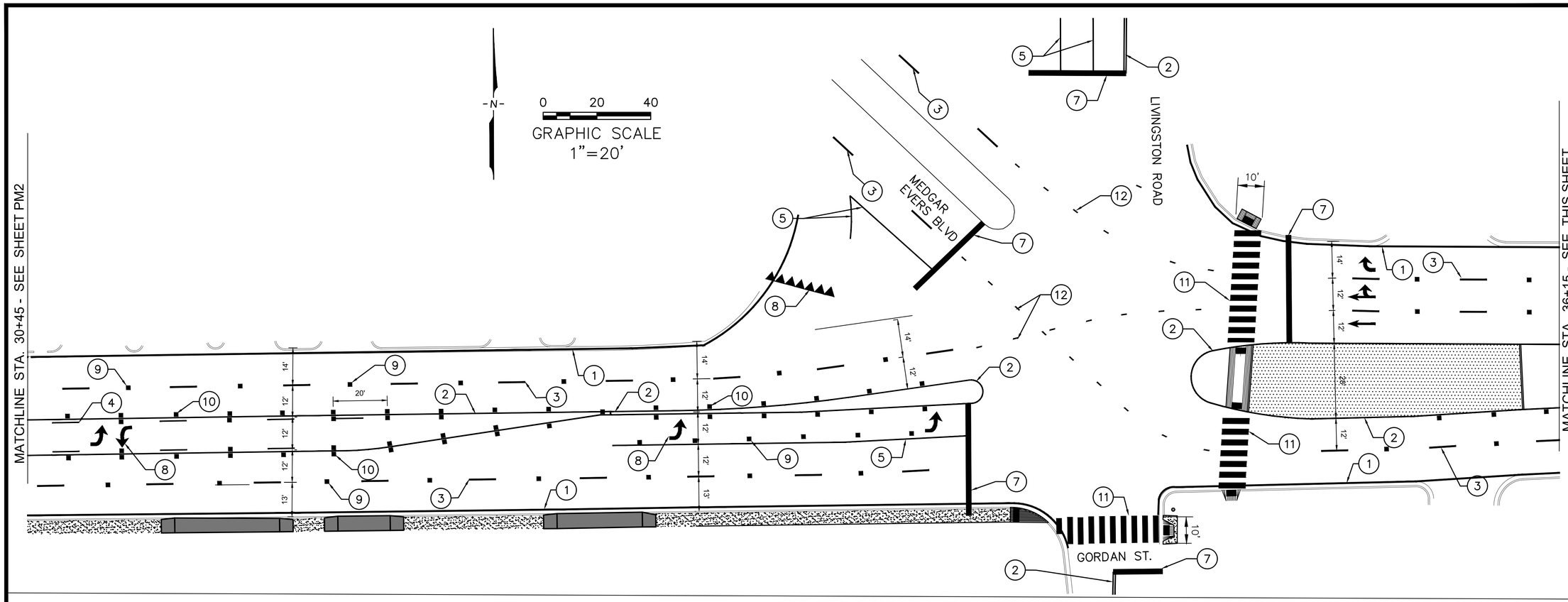


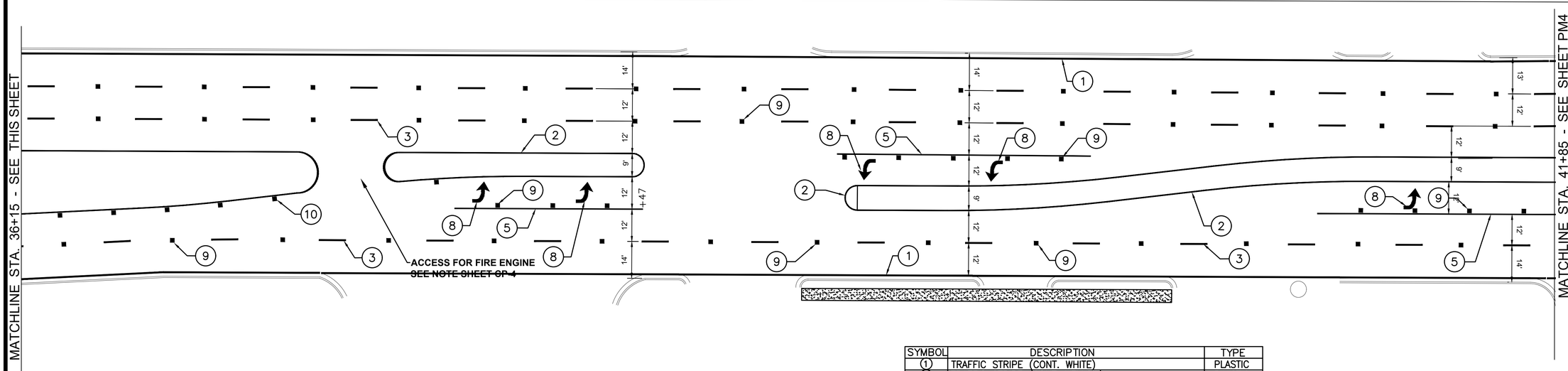


| SYMBOL | DESCRIPTION | TYPE |
|---|---|---|
| 1 | TRAFFIC STRIPE (CONT. WHITE) | PLASTIC |
| 2 | TRAFFIC STRIPE (CONT. YELLOW) | PLASTIC |
| 3 | TRAFFIC STRIPE (SKIP WHITE)(10' @ 30' SPACING) | PLASTIC |
| 4 | TRAFFIC STRIPE (SKIP YELLOW) | PLASTIC |
| 5 | DETAIL STRIPE (4" EQ. LENGTH) (WHITE) | PLASTIC |
| 6 | DETAIL STRIPE (4" EQ. LENGTH) (YELLOW) | PLASTIC |
| 7 | LEGEND (WHITE) (STOP BAR)(4" EQ. LENGTH) | PLASTIC |
| 8 | LEGEND (WHITE) | PLASTIC |
| 9 | RED-CLEAR REFLECTIVE RAISED MARKERS | ——— |
| 10 | TWO-WAY YELLOW REFLEC. RAISED MARKERS | ——— |
| 11 | DETAIL STRIPE (SF) (WHITE) | PLASTIC |
| 12 | TRAFFIC STRIPE (SKIP WHITE) 2' @ 10' SPACING | ——— |


SOL
Engineering Services, LLC
106 SOUTH PRESIDENT STREET
4th FLOOR
JACKSON, MS 39201
Phone: (601) 961-1415
Fax: (601) 960-0420
Web: www.solengrs.com



NOTICE TO DRAWING HOLDER

THE ENGINEER HAS PREPARED AND FURNISHED THIS DRAWINGS TO THE OWNER FOR USE ON THIS PROJECT ONLY AND ARE NOT TO BE USED ON OTHER PROJECTS, OR EXTENSIONS OF THIS PROJECT OR ON ANY OTHER PROJECT. ANY REUSE OF THIS DRAWING, WITHOUT WRITTEN AGREEMENT BY THE ENGINEER, SHALL BE AT THE REUSER'S SOLE RISK AND THE REUSER SHALL INDEMNIFY AND HOLD HARMLESS THE ENGINEER.


MILL AND OVERLAY
WOODROW WILSON DRIVE
JACKSON, MS.

| NO. | DATE | REVISION | BY | APVD |
|---|---|---|---|---|
| 1 | | | | |
| 2 | | | | |
| 3 | | | | |
| 4 | | | | |
| 5 | | | | |
| 6 | | | | |

DSGN BY: JT
DRAWN BY: WL
CHECKED BY:
APPROVED BY:

SCALE: 1"=20'
PROJECT NO: 108075
FILENAME:
DATE: 07/2022
SURVEYED BY: RT
SHEET TITLE
PAVEMENT MARKING
WORKING NUMBER
PM3

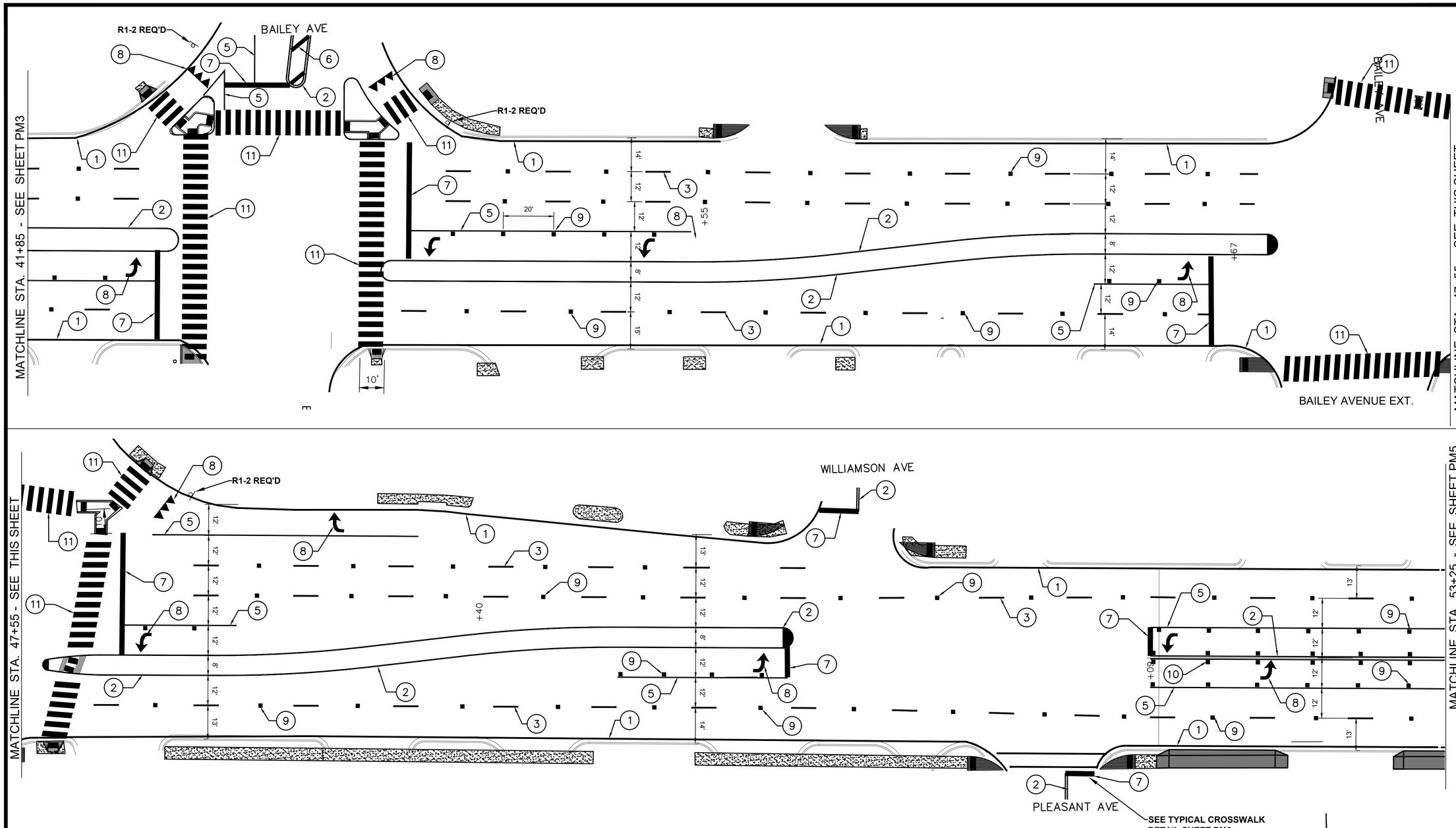


| SYMBOL | DESCRIPTION | TYPE |
|---|---|---|
| 1 | TRAFFIC STRIPE (CONT. WHITE) | PLASTIC |
| 2 | TRAFFIC STRIPE (CONT. YELLOW) | PLASTIC |
| 3 | TRAFFIC STRIPE (SKIP WHITE)(10' @ 30' SPACING) | PLASTIC |
| 4 | TRAFFIC STRIPE (SKIP YELLOW) | PLASTIC |
| 5 | DETAIL STRIPE (4" EQ. LENGTH) (WHITE) | PLASTIC |
| 6 | DETAIL STRIPE (4" EQ. LENGTH) (YELLOW) | PLASTIC |
| 7 | LEGEND (WHITE) (STOP BAR)(4" EQ. LENGTH) | PLASTIC |
| 8 | LEGEND (WHITE) | PLASTIC |
| 9 | RED-CLEAR REFLECTIVE RAISED MARKERS | ——— |
| 10 | TWO-WAY YELLOW REFLEC. RAISED MARKERS | ——— |
| 11 | DETAIL STRIPE (SF) (WHITE) | PLASTIC |
| | | |

-N-

0 20 40

GRAPHIC SCALE
1"=20'

SOL Engineering Services, LLC
106 SOUTH PRESIDENT STREET
4th FLOOR
JACKSON, MS 39201
Phone: (601) 961-1415
Fax: (601) 960-0420
Web: www.solengrs.com

NOTICE TO DRAWING HOLDER

THE ENGINEER HAS PREPARED AND FURNISHED THIS DRAWINGS TO THE OWNER FOR USE ON THIS PROJECT ONLY AND ARE NOT TO BE USED ON OTHER PROJECTS, OR EXTENSIONS OF THIS PROJECT OR ON ANY OTHER PROJECT. ANY REUSE OF THIS DRAWING, WITHOUT WRITTEN AGREEMENT BY THE ENGINEER, SHALL BE AT THE REUSER'S SOLE RISK AND THE REUSER SHALL INDEMNIFY AND HOLD HARMLESS THE ENGINEER.

# MILL AND OVERLAY
# WOODROW WILSON DRIVE
# JACKSON, MS.

| NO. | DATE | REVISION | BY | APVD |
|---|---|---|---|---|
| 6 | | | | |
| 5 | | | | |
| 4 | | | | |
| 3 | | | | |
| 2 | | | | |
| 1 | | | | |

DSGN BY: JT
DRAWN BY: WL
CHECKED BY:
APPROVED BY:

SCALE: 1"=20'
PROJECT NO: 108075
FILENAME:
DATE: 07/2022
SURVEYED BY: RT
SHEET TITLE
PAVEMENT MARKING
WORKING NUMBER
PM4

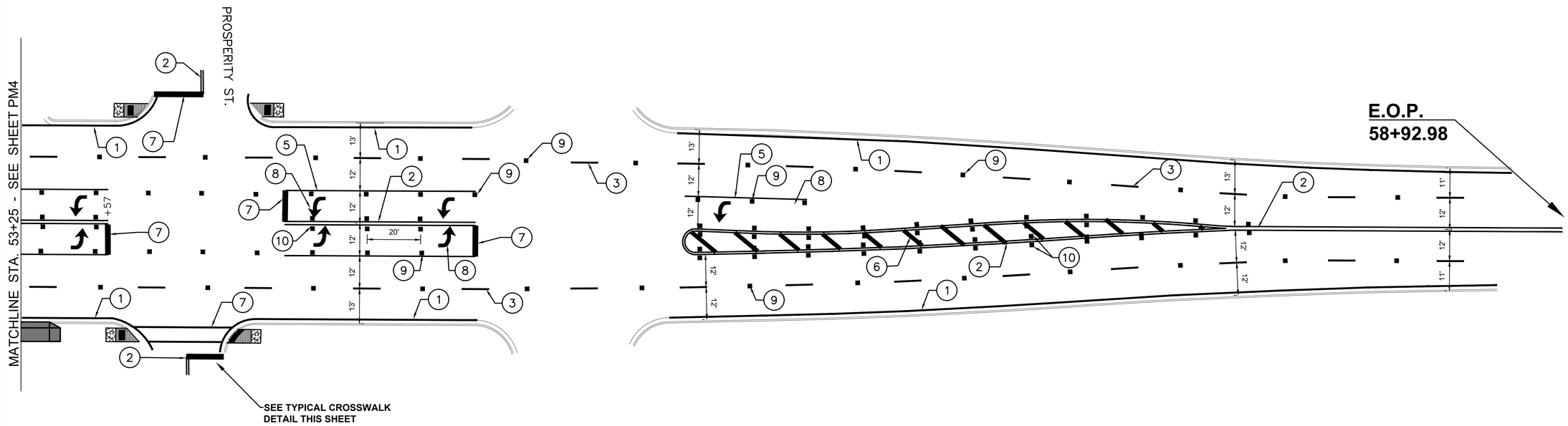


## TYPICAL CROSSWALK PLACEMENT

### CONTINENTAL TYPE

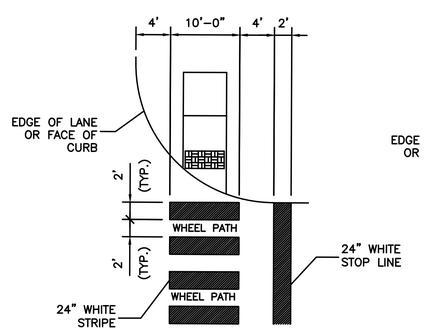


### STANDARD TYPE

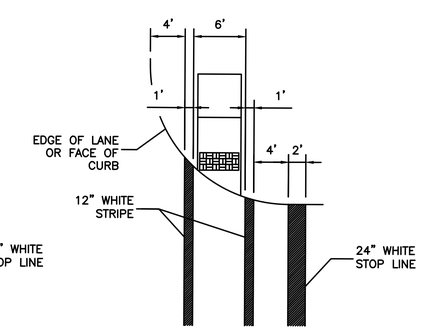


| SYMBOL | DESCRIPTION | TYPE |
|---|---|---|
| 1 | TRAFFIC STRIPE (CONT. WHITE) | PLASTIC |
| 2 | TRAFFIC STRIPE (CONT. YELLOW) | PLASTIC |
| 3 | TRAFFIC STRIPE (SKIP WHITE)(10' @ 30' SPACING) | PLASTIC |
| 4 | TRAFFIC STRIPE (SKIP YELLOW) | PLASTIC |
| 5 | DETAIL STRIPE (4" EQ. LENGTH) (WHITE) | PLASTIC |
| 6 | DETAIL STRIPE (4" EQ. LENGTH) (YELLOW) | PLASTIC |
| 7 | LEGEND (WHITE) (STOP BAR)(4" EQ. LENGTH) | PLASTIC |
| 8 | LEGEND (WHITE) | PLASTIC |
| 9 | RED-CLEAR REFLECTIVE RAISED MARKERS | ——— |
| 10 | TWO-WAY YELLOW REFLEC. RAISED MARKERS | ——— |
| 11 | DETAIL STRIPE (SF) (WHITE) | PLASTIC |
| | | |

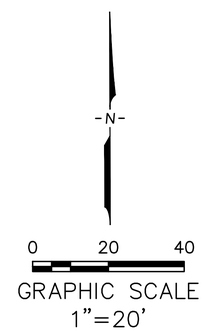



SOL
Engineering Services, LLC
106 SOUTH PRESIDENT STREET
4th FLOOR
JACKSON, MS 39201
Phone: (601) 961-1415
Fax: (601) 960-0420
Web: www.solengrs.com



NOTICE TO DRAWING HOLDER

THE ENGINEER HAS PREPARED AND FURNISHED THIS DRAWINGS TO THE OWNER FOR USE ON THIS PROJECT ONLY AND ARE NOT TO BE USED ON OTHER PROJECTS OR EXTENSIONS OF THIS PROJECT OR ON ANY OTHER PROJECT. ANY REUSE OF THIS DRAWING, WITHOUT WRITTEN AGREEMENT BY THE ENGINEER, SHALL BE AT THE REUSER'S SOLE RISK AND THE REUSER SHALL INDEMNIFY AND HOLD HARMLESS THE ENGINEER.


MILL AND OVERLAY
WOODROW WILSON DRIVE
JACKSON, MS.

| NO. | DATE | REVISION | BY | APV'D |
|---|---|---|---|---|
| 1 | | | | |
| 2 | | | | |
| 3 | | | | |
| 4 | | | | |
| 5 | | | | |
| 6 | | | | |

DSGN BY: JT
DRAWN BY: WL
CHECKED BY:
APPROVED BY:

SCALE: 1"=20'
PROJECT NO: 108075
FILENAME:
DATE: 07/2022
SURVEYED BY: RT
SHEET TITLE
PAVEMENT MARKING
WORKING NUMBER
PM5

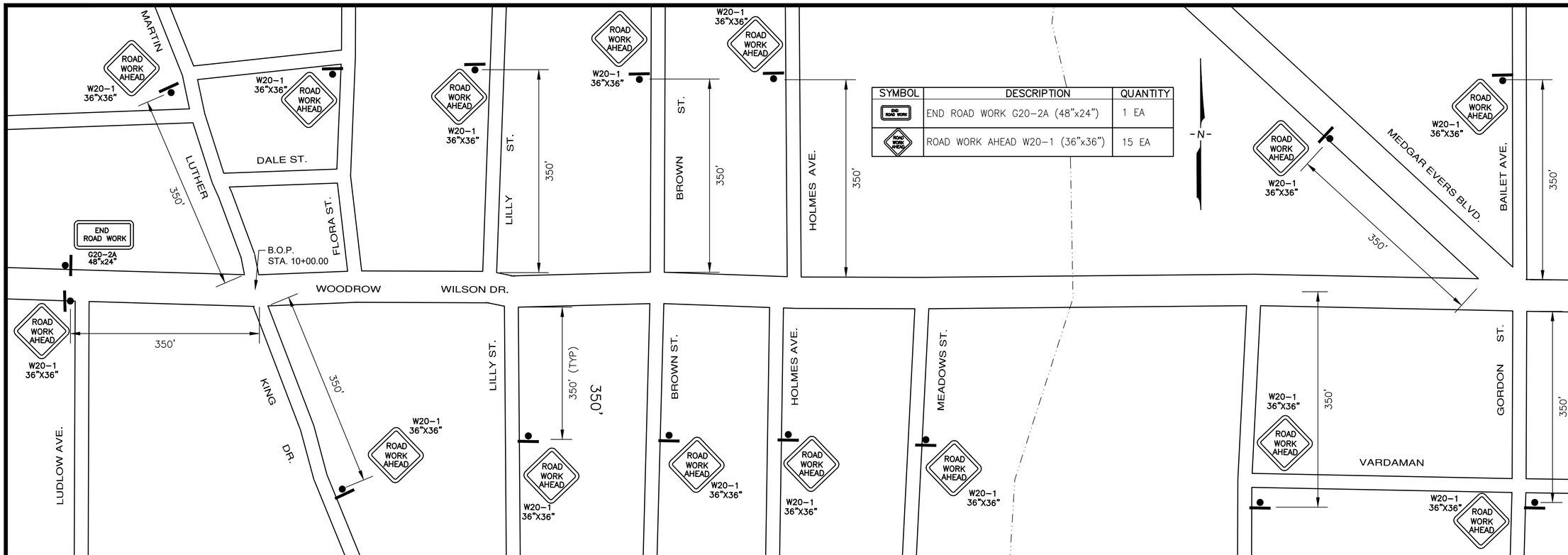


| SYMBOL | DESCRIPTION | QUANTITY |
|---|---|---|
| END ROAD WORK | END ROAD WORK G20-2A (48"x24") | 1 EA |
| ROAD WORK AHEAD | ROAD WORK AHEAD W20-1 (36"x36") | 15 EA |

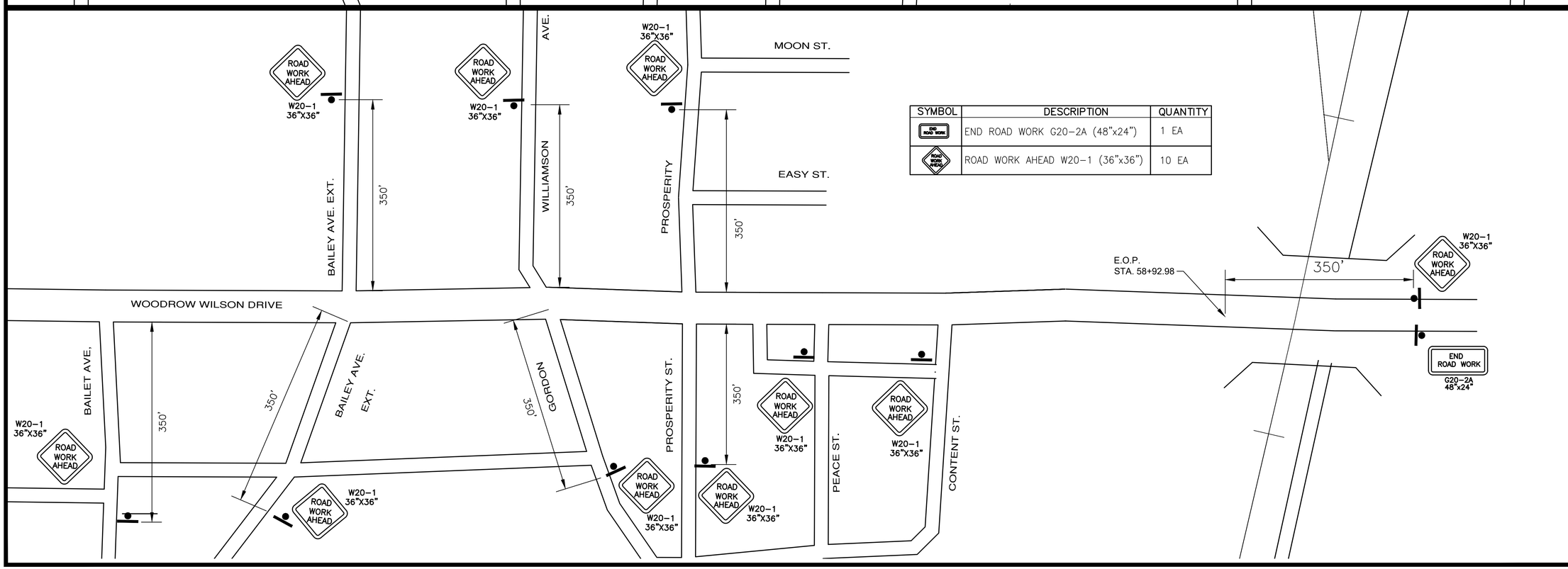


| SYMBOL | DESCRIPTION | QUANTITY |
|---|---|---|
| END ROAD WORK | END ROAD WORK G20-2A (48"x24") | 1 EA |
| ROAD WORK AHEAD | ROAD WORK AHEAD W20-1 (36"x36") | 10 EA |


SOL
Engineering Services, LLC
106 SOUTH PRESIDENT STREET
4th FLOOR
JACKSON, MS 39201
Phone: (601) 961-1415
Fax: (601) 960-0420
Web: www.solengrs.com



NOTICE TO DRAWING HOLDER

THE ENGINEER HAS PREPARED AND FURNISHED THIS DRAWINGS TO THE OWNER FOR USE ON THIS PROJECT ONLY AND ARE NOT TO BE USED ON OTHER PROJECTS OR EXTENSIONS OF THIS PROJECT OR ON ANY OTHER PROJECT. ANY REUSE OF THIS DRAWING, WITHOUT WRITTEN AGREEMENT BY THE ENGINEER, SHALL BE AT THE REUSER'S SOLE RISK AND THE REUSER SHALL INDEMNIFY AND HOLD HARMLESS THE ENGINEER.


# MILL AND OVERLAY
# WOODROW WILSON DRIVE
# JACKSON, MS.

| NO | DATE | REVISION | DRAWN BY: | CHECKED BY: | APPROVED BY: | BY | APVD |
|---|---|---|---|---|---|---|---|
| 1 | | | | | | | |
| 2 | | | | | | | |
| 3 | | | | | | | |
| 4 | | | | | | | |
| 5 | | | | | | | |
| 6 | | | | | | | |

DSGN BY: JT

SCALE: NTS

PROJECT NO: 108075

FILENAME:

DATE: 07/2022

SURVEYED BY: RT

SHEET TITLE
TRAFFIC CONTROL

WORKING NUMBER
TC1

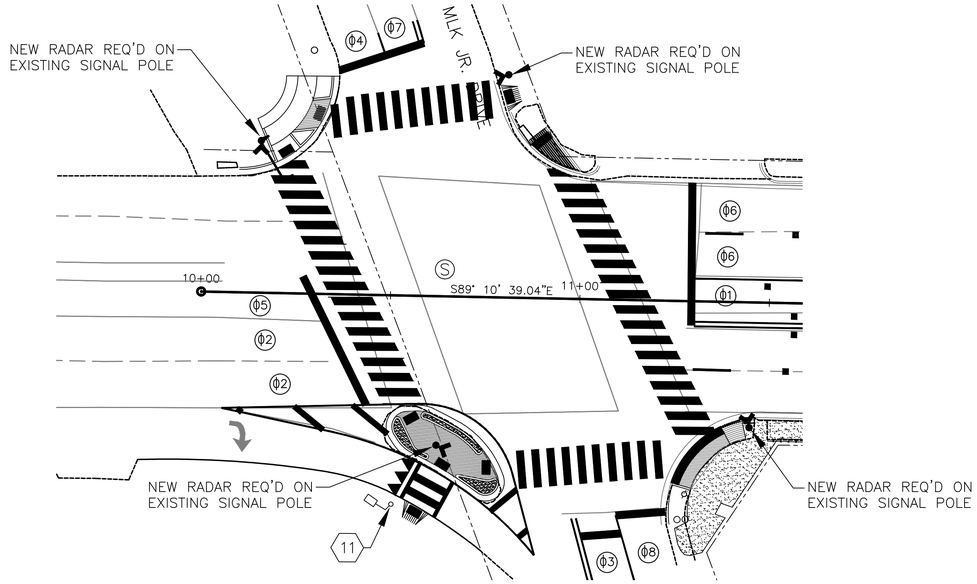


GENERAL NOTES:

1. REPLACE ALL EXISTING PUSHBUTTONS WITH NEW APS PUSHBUTTONS (8).
2. CONTRACTOR SHALL BE RESPONSIBLE FOR TRANSFERING ALL SIGNAL CONTROLLER DATA TO THE NEW CONTROLLER.
3. EXISTING CONTROLLER SHALL BE SALVAGED TO THE CITY OF JACKSON.
4. CONTRACTOR MAY REMOVE EXISTING LOOP CABLES IF NECESSARY.

| SYMBOL | DESCRIPTION | TYPE | QUANTITY |
|---|---|---|---|
| 11 | PEDESTRIAN SIGNAL AND PUSH BUTTON | ——— | 1 EA |

SIGNAL PHASING DIAGRAM

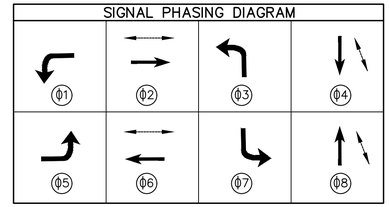


SOL
Engineering Services, LLC
106 SOUTH PRESIDENT STREET
4th FLOOR
JACKSON, MS 39201
Phone: (601) 961-1415
Fax: (601) 960-0420
Web: www.solengrs.com

NOTICE TO DRAWING HOLDER

THE ENGINEER HAS PREPARED AND FURNISHED THIS DRAWINGS TO THE OWNER FOR USE ON THIS PROJECT ONLY AND ARE NOT TO BE USED ON OTHER PROJECTS, OR EXTENSIONS OF THIS PROJECT OR ON ANY OTHER PROJECT. ANY REUSE OF THIS DRAWING, WITHOUT WRITTEN AGREEMENT BY THE ENGINEER, SHALL BE AT THE REUSER'S SOLE RISK AND THE REUSER SHALL INDEMNIFY AND HOLD HARMLESS THE ENGINEER.

MILL AND OVERLAY
WOODROW WILSON DRIVE
JACKSON, MS.

| NO. | DATE | REVISION | BY | APV'D |
|---|---|---|---|---|
| 1 | | | | |
| 2 | | | | |
| 3 | | | | |
| 4 | | | | |
| 5 | | | | |
| 6 | | | | |

DSGN BY: JT
DRAWN BY: WL
CHECKED BY:
APPROVED BY:

SCALE: 1"=20'
PROJECT NO: 108075
FILENAME:
DATE: 07/2022
SURVEYED BY: RT
SHEET TITLE
TRAFFIC SIGNALS
WORKING NUMBER
SG1

FMS CONUPDATE

| STATE | PROJECT NO. |
| --- | --- |
| MISS. | |

# TRAFFIC SIGNAL GENERAL NOTES

1. POLES, SIGNAL HEADS, EQUIPMENT BOXES, PULLBOXES AND CONDUIT LOCATIONS MAY BE VARIED SLIGHTLY TO FIT FIELD CONDITIONS AS DIRECTED BY THE ENGINEER. HOWEVER, SIGNAL HEAD OR POLE LOCATIONS SHALL BE WITHIN REQUIREMENTS OUTLINED IN THE LATEST EDITION OF THE MANUAL ON UNIFORM TRAFFIC CONTROL DEVICES AND HIGHWAY DESIGN AND OPERATIONAL PRACTICES RELATED TO HIGHWAY SAFETY.

2. THE CONTRACTOR SHALL PROVIDE MAST ARM POLE DESIGN CERTIFICATION AND CALCULATIONS AS OUTLINED IN SECTION 722.02 OF STANDARD SPECIFICATIONS. DESIGN STANDARD FOR MAST ARMS POLES SHALL BE 2013 AASHTO STANDARD SPECIFICATIONS FOR STRUCTURAL SUPPORTS FOR HIGHWAY SIGNS, LUMINAIRES AND TRAFFIC SIGNALS. USE FATIGUE CATEGORY II, USE 50 YEAR DESIGN SERVICE LIFE AND DO NOT CONSIDER GALLOPING OR TRUCK-INDUCED GUSTS. WIND AND ICE LOADS VARIABLE BASED UPON MAPS IN THE 2013 AASHTO SPECIFICATION. USE UPSWEPT MAST ARMS UNLESS OTHERWISE NOTED ON PLANS. SEE TSD 3.

3. DETERMINATION OF REQUIRED SIZES, LENGTHS AND GAUGES OF TYPE I - XI STEEL POLES SHALL BE THE RESPONSIBILITY OF THE CONTRACTOR IN ACCORDANCE WITH THE PLANS AND SECTION 722.02 OF THE STANDARD SPECIFICATIONS, UNLESS OTHERWISE SPECIFIED IN PLANS OR SPECIFICATIONS.

4. TRAFFIC SIGNAL MAST ARM POLES SHALL BE HOT DIPPED GALVANIZED WITH FINISH APPROVED BY THE ENGINEER.

5. TRAFFIC SIGNAL MAST ARM POLES REQUIRING LUMINAIRES ARE DESIGNATED BY (L). ALL LUMINAIRES SHALL BE LED UNLESS OTHERWISE NOTED ON PLANS.

6. STAINLESS STEEL TAG ATTACHED TO THE POLE SHAFT USING 3/16 INCH STAINLESS STEEL POP RIVETS WITH PROPERTIES AND INFORMATION AS FOLLOWS:
   - MINIMUM 1/16 INCH THICKNESS
   - MINIMUM 1/4 INCH STAMPED LEGEND WITH FOLLOWING INFORMATION:
     -- MANUFACTURER NAME
     -- MONTH / YEAR OF MANUFACTURE
     -- UNIQUE IDENTIFYING NUMBER FOR FUTURE MANUFACTURER REFERENCE
     -- EXTERNAL PROJECT NUMBER FROM THE PLANS COVER SHEET (EXAMPLE: STP-XXXX-XX…)

   TAG TO BE INSTALLED ON SHAFT SIDE OPPOSITE THE MAINLINE HIGHWAY AND LOCATED APPROXIMATELY 48 INCHES ABOVE THE TOP OF BASE PLATE.

7. THE TOP OF THE STRAIN POLE FOUNDATION SHALL BE 6" ABOVE THE GROUND. THE CONTRACTOR SHALL PROVIDE POLES OF SUFFICIENT LENGTH PLUS 2 FEET TO PROVIDE REQUIRED VERTICAL CLEARANCE OF THE TRAFFIC SIGNAL HEADS WITHOUT EXTENDING THE FOUNDATION ABOVE THE GROUND LINE OF THE POINT WHERE THE POLE IS LOCATED, EVEN THOUGH THIS MAY BE BELOW THE FINISHED GRADE OF THE ROADWAY.

8. ALL STRAIN POLES AT AN INTERSECTION SHALL BE THE SAME DIAMETER AND UTILIZE THE SAME BOLT CIRCLE SPACING.

9. POLE FOUNDATIONS AND BASE MOUNTED CABINET FOUNDATIONS, GRADE SHALL BE ESTABLISHED TO ±3" OF EDGE OF PAVEMENT ELEVATION UNLESS APPROVED BY SIGNAL PROJECT ENGINEER.

10. TRAFFIC SIGNAL HEADS SHALL BE BLACK IN COLOR UNLESS OTHERWISE NOTED ON PLANS WITH BLACK BACK PLATES

11. PEDESTRIAN HEADS SHALL BE BLACK IN COLOR UNLESS OTHERWISE NOTED ON PLANS.

12. PEDESTRIAN PUSHBUTTONS SHALL BE EITHER STANDARD PUSHBUTTONS OR APS (ACCESSIBLE PEDESTRIAN SYSTEM) STYLE AS NOTED ON PLANS. SIGNS TO BE INCLUDED IN PAY ITEM FOR PEDESTRIAN PUSHBUTTONS AT NO ADDITIONAL COST. SIDE OF POLE LOCATIONS OF PUSHBUTTONS MAY BE FIELD ADJUSTED. PUSHBUTTON HARDWARE SHALL BE BLACK IN COLOR UNLESS OTHERWISE NOTED ON PLANS.

13. FIELD DRILL AND TAP EXISTING POLES WHERE PEDESTRIAN SIGNALS AND PUSHBUTTONS ARE REQUIRED ON PLANS. (ABSORBED ITEM).

14. TRAFFIC SIGNAL CABINETS AND CONTROLLERS SHALL BE WIRED TO PROVIDE FOR ALL PHASES INCLUDING FUTURE PHASES IN ACCORDANCE WITH THE PHASE SEQUENCE DIAGRAM.

15. ALL TRAFFIC SIGNAL CONTROLLERS SHALL ETHERNET READY, AND COMPATIBLE WITH MDOT'S EXISTING TRAFFIC SIGNAL MANAGEMENT SOFTWARE. ALL TRAFFIC SIGNAL CONTROLLER FIRMWARE SHALL BE CAPABLE OF DELAYING THE ONSET OF THE FLASHING YELLOW ARROW. ALL MMU'S SHALL BE ETHERNET READY, 16 CHANNEL, AND CAPABLE OF RUNNING 12 DIFFERENT MODES OF FLASHING YELLOW ARROW OPERATION. THE CONTRACTOR SHALL COORDINATE WITH MDOT FOR IP ADDRESSES ON ALL NETWORKABLE DEVICES. DEVICES INCLUDE BUT NOT LIMITED TO: CONTROLLER, MMU WITH SDLC CABLE (CONFLICT MONITOR), AND DETECTION UNITS. TRAFFIC SIGNAL CONTROLLER CABINET SHALL HAVE A 16 LOAD BAY FACILITY, REAR ACCESS DOOR, LAPTOP TRAY, AND DUAL POSITION INTERNAL LED LIGHTING. ALL TRAFFIC SIGNAL CONTROLLER CABINETS SHALL HAVE A 5 POSITION CARD RACK AND ONE 175 WATT MINIMUM POWER SUPPLY AND 4 AVAILABLE SLOTS UNLESS OTHERWISE NOTED ON PLANS. SEE 907-632.02.6.1.

16. FOR PROTECTED/PERMITTED LEFT TURN PHASING USING TYPE 2 FYA TRAFFIC SIGNAL HEADS, OPERATION SHALL BE AS FOLLOWS: THE PROTECTED PHASE OF THIS OPERATION SHALL DISPLAY A SOLID GREEN ARROW, FOLLOWED BY A SOLID YELLOW ARROW, AND ENDING WITH A SOLID RED ARROW. THE PERMITTED PORTION OF THIS OPERATION SHALL START WITH A FLASHING YELLOW ARROW, FOLLOWED BY A SOLID YELLOW ARROW, AND ENDING WITH A SOLID RED ARROW. THERE SHALL BE A DELAY (AS DIRECTED BY THE ENGINEER) BETWEEN THE END OF THE PROTECTED PORTION OF THIS OPERATION AND THE BEGINNING OF THE PERMITTED PORTION OF THIS OPERATION. DURING THIS DELAY, THE OPPOSING PHASE THRU HEADS ARE CAPABLE OF DISPLAYING A GREEN BALL. SIGNAL CONTROLLER WITH FIRMWARE NECESSARY TO ACCOMPLISH THIS DELAY SHALL BE PROVIDED.

17. POLES AND FOUNDATIONS OF EXISTING SIGNAL INSTALLATION REMOVALS SHALL BE CUT OFF 6" BELOW GROUND, REMOVED AND AREA RESTORED TO MATCH ADJACENT SURFACE AS DIRECTED BY THE ENGINEER.

18. ALL REMOVED EXISTING TRAFFIC SIGNAL EQUIPMENT SHALL BECOME THE PROPERTY OF THE CONTRACTOR, UNLESS SPECIFIC ITEMS ARE NOTED IN THE PLANS TO BE SALVAGED AS DIRECTED BY THE ENGINEER.

19. THE CONTRACTOR SHALL BE REQUIRED TO PROVIDE ELECTRICAL SERVICE FROM THE POWER COMPANY SERVICE POINT TO THE POWER SERVICE PEDESTAL. FOR SPAN WIRE INSTALLATION, POWER SHALL RUN FROM THE POWER COMPANY SERVICE POINT AERIAL TO THE SIGNAL POLE NEAREST THE CONTROLLER, THE SERVICE SHALL THEN RUN TO THE CONTROLLER AS SHOWN ON THE PLANS. FOR MAST ARM INSTALLATION, POWER SHALL RUN FROM THE POWER COMPANY SERVICE POINT UNDERGROUND DIRECTLY TO THE POWER SERVICE PEDESTAL, THEN TO THE CONTROLLER CABINET, AS SHOWN ON THE PLANS. A DISCONNECT SHALL BE INSTALLED AT THE POWER COMPANY SERVICE POLE FOR MAST ARM INSTALLATIONS.

20. POWER SERVICE METER SHALL NOT BE MOUNTED ON THE CONTROLLER CABINET OR MAST ARM POLE SHAFTS. A SEPARATE POWER SERVICE PEDESTAL FOR MOUNTING THESE ITEMS IS REQUIRED. (SEE TSD-6 & TSD-7). BLACK CONDUCTORS SHALL BE USED FOR ALL LINE (HOT) WIRES AND WHITE CONDUCTORS SHALL BE USED FOR ALL NEUTRAL WIRES.

21. IT SHALL BE THE CONTRACTOR'S RESPONSIBILITY TO MAKE THE NECESSARY ARRANGEMENTS WITH THE LOCAL POWER COMPANY TO PROVIDE THE POWER SUPPLY ASSEMBLY FOR ANY NEW INSTALLATION. THE CONTRACTOR SHALL PAY FOR, AT NO COST TO THE DEPARTMENT, ALL DEPOSITS, HOOK-UP CHARGES, OR OTHER SERVICE FEES REQUIRED BY THE POWER COMPANY FOR THE ESTABLISHMENT OF NEW SERVICE. THE COST OF ALL SUCH FEES SHALL BE CONSIDERED INCIDENTAL AND ABSORBED WITHIN EXISTING PAY ITEMS. THE DEPARTMENT OR THE LOCAL AGENCY WILL BE RESPONSIBLE FOR PAYMENT OF THE MONTHLY SERVICE BILL FOR THE NEW POWER SERVICE INSTALLATION. IT SHALL BE THE RESPONSIBILITY OF THE CONTRACTOR TO SWAP THE ELECTRICAL SERVICE ACCOUNT OVER TO THE DEPARTMENT OR LOCAL AGENCY.
    WHEN ELECTRIC POWER SERVICE EXISTS AND IS USED FOR THE OPERATION OF AN EXISTING SYSTEM, THE MONTHLY SERVICE FEES SHALL CONTINUE TO BE PAID BY THE DEPARTMENT OR THE LOCAL AGENCY. IF THE EXISTING POWER SERVICE IS INTENDED FOR USE WITH A NEW SIGNAL SYSTEM, THEN ANY SERVICE CHARGE FEES SHALL BE THE RESPONSIBILITY OF THE CONTRACTOR. SIMILARLY, IF AN EXISTING POWER SERVICE IS TO BE DISCONNECTED, ANY SERVICE CHARGE FEES SHALL BE THE RESPONSIBILITY OF THE CONTRACTOR. THE COST OF ALL SUCH FEES SHALL BE CONSIDERED INCIDENTAL AND ABSORBED WITHIN EXISTING PAY ITEMS.

22. WHEN CONTRACTOR SHALL BE RESPONSIBLE FOR PROVIDING TEMPORARY SIGNALS TO ACCOMMODATE ROADWAY CONSTRUCTION, IT SHALL BE PAID FOR UNDER PAY ITEM 619-H1, TRAFFIC SIGNAL, LUMP SUM, UNLESS OTHERWISE NOTED ON PLANS.

23. VEHICLE LOOP ASSEMBLIES SHALL BE INSTALLED IN THE TOP LAYER OF BINDER OR EXISTING SURFACE BEFORE THE FINAL SURFACE COURSE IS APPLIED (BASED ON 2" FINAL LIFT MAXIMUM).

24. WHEN RADAR, VIDEO , OR MULTI-SENSOR DETECTION IS USED, THE SYSTEM MAY REQUIRE BOTH STOP BAR AND ADVANCE DETECTION. TSI PLANS SHOW A GENERIC LAYOUT FOR DETECTION; DETECTOR MAY BE RELOCATED PER MANUFACTURER'S RECOMMENDATIONS. THERE SHALL BE NO EXTRA PAY FOR MOVING OF DETECTORS OTHER THAN CABLE LENGTHS. MANUFACTURER TO HAVE FACTORY REP ON SITE DURING INSTALLATIONS UNLESS CERTIFIED BY THE MANUFACTURER. DETECTION CABLE WILL BE MEASURED BY THE LINEAR FOOT, MEASURED HORIZONTALLY ALONG THE CONDUIT, MESSENGER CABLE OR MAST ARM AND VERTICALLY ALONG THE POLE. DETECTION CABLE FOR CAMERAS, THE POWER AND VIDEO CABLE MAY BE IN THE SAME JACKET.
    ALL DETECTION UNITS SHALL BE NETWORKABLE DEVICES AND BE ON THE MDOT NETWORK IF NOTED ON PLANS.

25. ALL GROUNDING EQUIPMENT SHALL BE COST ABSORBED.

26. MESSENGER CABLE AND OTHER SUPPORTING DEVICES WHERE REQUIRED SHALL BE ABSORBED IN THE PAY ITEMS FOR SIGNAL CABLE.

27. THE CONTRACTOR SHALL STAKE THE LOCATION OF EACH POLE FOUNDATION AND NOTIFY THE PROJECT ENGINEER FOR CONCURRENCE IN THE LOCATION BEFORE PROCEEDING WITH THE PURCHASE OF THE POLE.

28. THE CONTRACTOR SHALL BE REQUIRED TO ADEQUATELY AND COMPLETELY COVER TRAFFIC SIGNAL HEADS DURING TIMES THAT THEY ARE NOT IN OPERATION WITH A DURABLE, OUTDOOR- HARDENED MATERIAL THAT CONTRASTS WITH THE COLOR OF THE HEAD THAT CLEARLY DESIGNATES THAT THE SIGNAL IS NOT IN "STOP AND GO" MODE. HEAD COVERS ARE TO BE APPROVED BY THE ENGINEER.

29. A NEW TRAFFIC SIGNAL INSTALLATION SHALL BE PUT IN FLASH OPERATION FOR A PERIOD OF THREE (3) TO SEVEN (7) DAYS PRIOR TO THE ACTIVATION OF THE SIGNAL'S "STOP AND GO" OPERATION. ACTIVATION OF NEW TRAFFIC SIGNALS SHALL BE DURING A MID-WEEK WEEKDAY (TUESDAY – THURSDAY) DURING A NON-PEAK TIME AND SHALL BE COORDINATED WITH THE ENGINEER. UPON INITIAL INSPECTION AND ACCEPTANCE TESTING OF THE NEW TRAFFIC SIGNAL INSTALLATION, THE CONTRACTOR SHALL REQUEST THE START OF THE 30 DAY BURN-IN PERIOD TO COMMENCE, AS OUTLINED IN SUBSECTION 631.03.4 OF THIS SPECIFICATION. ANY NOTED DEFICIENCIES FOUND WITHIN THAT 30 DAY PERIOD SHALL BE CORRECTED TO THE SATISFACTION OF THE ENGINEER. THE 30 DAY BURN-IN PERIOD MUST COMMENCE WITHIN THE CONTRACT TIME, AND BEFORE SUBSTANTIAL COMPLETION OF THE PROJECT IS GRANTED.

30. CONTRACTOR IS RESPONSIBLE FOR SCHEDULING FINAL INSPECTION MEETING WITH DISTRICT OFFICE, PROJECT OFFICE AND TRAFFIC ENGINEERING FOR SIGNAL PORTION OF THE PROJECT.

MISSISSIPPI DEPARTMENT OF TRANSPORTATION

TRAFFIC SIGNAL GENERAL NOTES

PRELIMINARY NOT FOR CONSTRUCTION

JBR BY
REVISION
2/20/18 DATE

PROJ. NO.:
COUNTY:

WORKING NUMBER SG2

FILENAME: Final TSDs 3.6.2019.dgn
DESIGN TEAM ____ CHECKED ____ DATE 2019-03-06

SHEET NUMBER 28

ROADWAY DESIGN DIVISION
MISSISSIPPI DEPARTMENT OF TRANSPORTATION

MMDDYY 00:00AMPM DGNFILENAME

| STATE | PROJECT NO. |
|---|---|
| MISS. | |

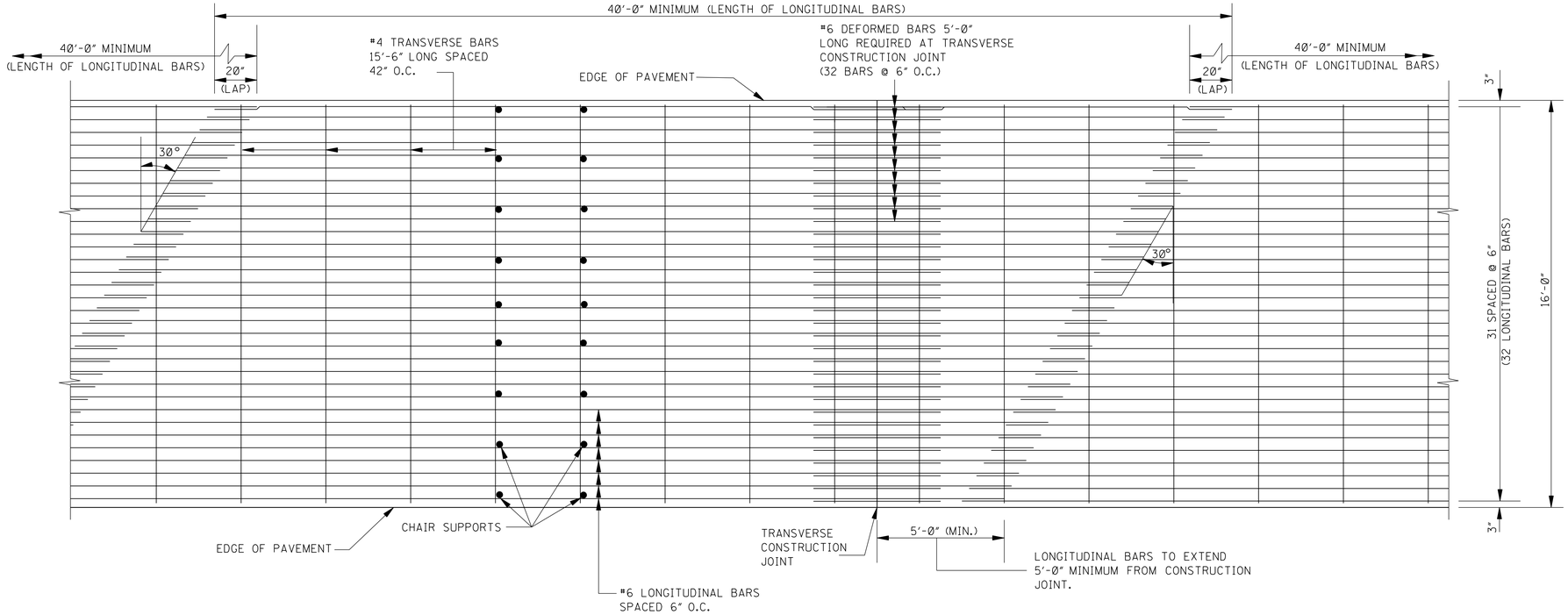


PLAN

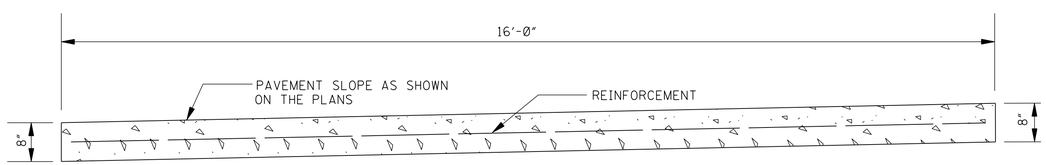


SECTION OF CONTINUOUSLY REINFORCED CONCRETE PAVEMENT
(8" UNIFORM THICKNESS)

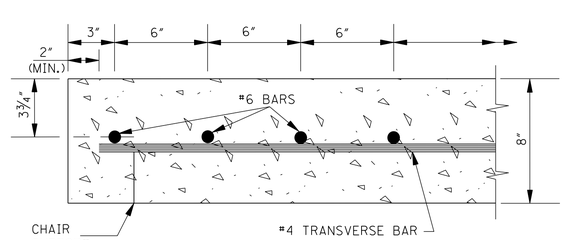


SECTION AT EDGE OF PAVEMENT

NOTE: LONGITUDINAL AND TRANSVERSE BARS SHALL BE SECURELY FASTENED TOGETHER BY ANY SATISFACTORY METHOD AT ALL EXTERIOR INTERSECTIONS AND AT NOT LESS THAN ALTERNATE INTERIOR INTERSECTIONS. WHERE LONGITUDINAL BARS ARE LAPPED, THE BARS SHALL BE DOUBLE FASTENED. THE 5'-0" LONG #6 BARS AT CONSTRUCTION JOINTS SHALL BE DOUBLE FASTENED TO ADJACENT BARS. ANY SATISFACTORY METHOD OR DEVICE FOR HOLDING THE BARS FIRMLY IN POSITION DURING THE PLACEMENT OF THE CONCRETE WILL BE ACCEPTABLE.

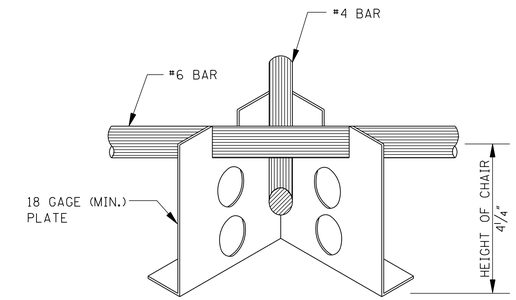


DETAILS OF CHAIR SUPPORT
(OPTION I)

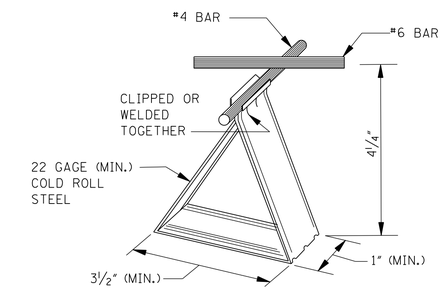


DETAIL OF CHAIR SUPPORT
(OPTION II)

NOTE: FOR USE OF OTHER CHAIR SUPPORTS, SUBMIT DRAWINGS TO THE CONSTRUCTION ENGINEER FOR APPROVAL.

GENERAL NOTES:

1. THE LOT SIZE FOR CONFORMANCE DETERMINATION SHALL BE 1000' OF PAVEMENT IN EACH TRAFFIC LANE. CHAIR SPACINGS SHALL NOT BE GREATER THAN 42" CENTER TO CENTER (LONGITUDINAL) AND 24" (TRANSVERSE). ADDITIONAL CHAIRS SHALL BE USED IF NECESSARY TO MEET THE STEEL PLACEMENT REQUIREMENTS.

| DATE | REVISION | BY |
|---|---|---|
| | | |

MISSISSIPPI DEPARTMENT OF TRANSPORTATION
ROADWAY DESIGN DIVISION
STANDARD PLAN

**CONTINUOUSLY REINFORCED CONCRETE PAVEMENT 16'-0" WIDE**

MDOT MISSISSIPPI DEPARTMENT OF TRANSPORTATION

WORKING NUMBER
CRP-1B

ISSUE DATE: AUGUST 01, 2017

SHEET NUMBER
6003

| STATE | PROJECT NO. |
|---|---|
| MISS. | |

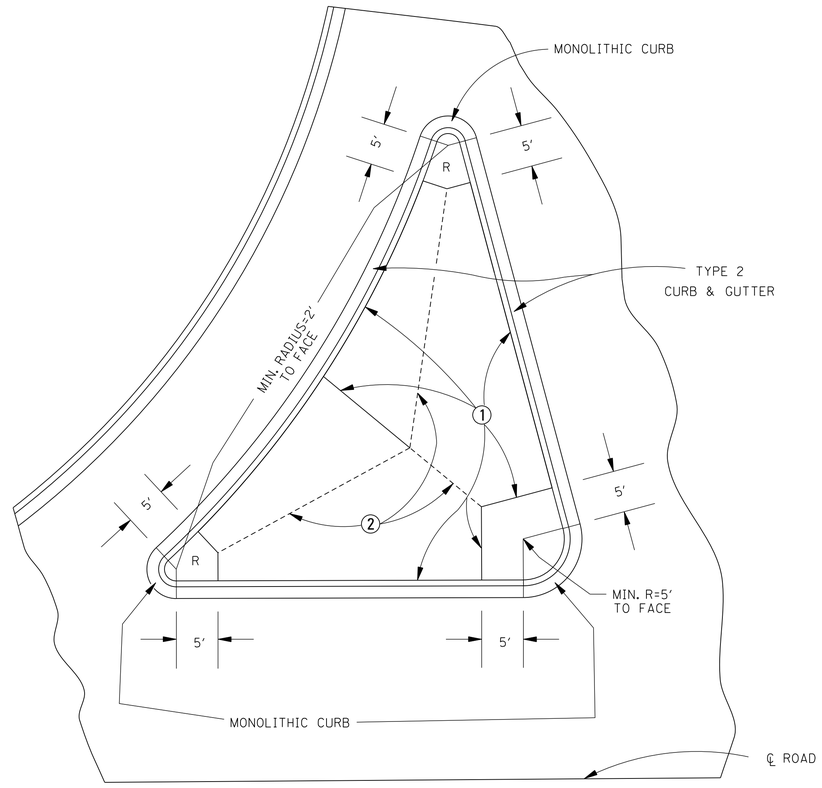


## PLAN VIEW OF MONOLITHIC CURB & GUTTER AT ISLAND

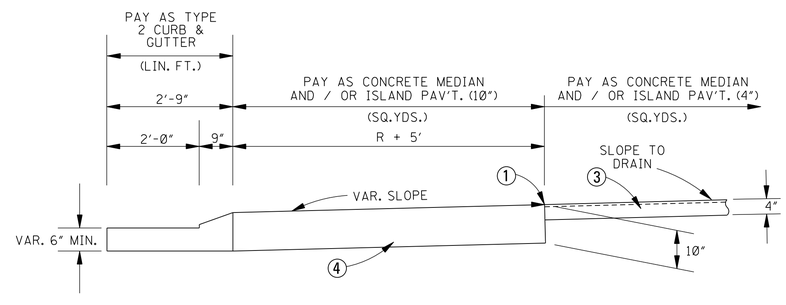


## TYPICAL DETAIL OF MONOLITHIC CURB & GUTTER AT ISLAND

1. ½" PREMOLDED EXPANSION JOINT (NOT A PAY ITEM)(SPACED AS PER SHEETS SD-1 OR SD-2)
2. ½" TOOLED CONTRACTION JOINT OR ½" PREMOLDED EXPANSION JOINT(NOT A PAY ITEM) (SPACED AS PER SHEETS SD-1 OR SD-2) AS DIRECTED BY THE ENGINEER.
3. 4" CONCRETE MEDIAN AND/OR ISLAND PAVEMENT
4. 10" CONCRETE MEDIAN AND/OR ISLAND PAVEMENT

| DATE | REVISION | BY |
|---|---|---|
| | | |

MISSISSIPPI DEPARTMENT OF TRANSPORTATION
ROADWAY DESIGN DIVISION
STANDARD PLAN

# CONCRETE ISLAND PAVEMENT DETAILS

MDOT MISSISSIPPI DEPARTMENT OF TRANSPORTATION

WORKING NUMBER
CIP-1

ISSUE DATE: AUGUST 01, 2017

SHEET NUMBER
6011

| STATE | PROJECT NO. |
|---|---|
| MISS. | |

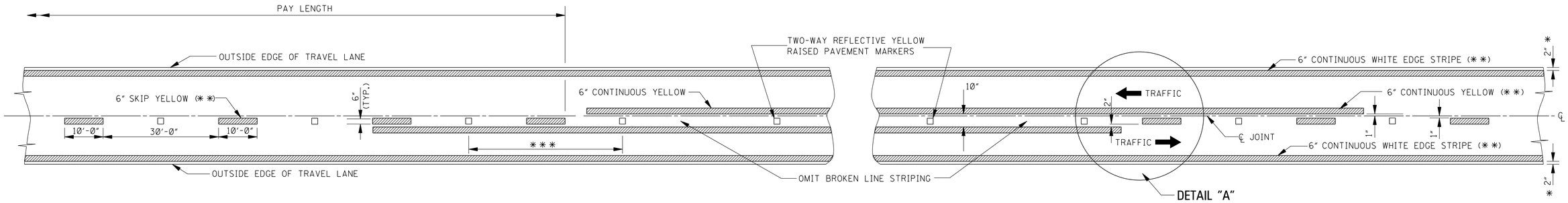


## TWO–WAY TRAFFIC
(ASPHALT OR CONCRETE PAVEMENT)

NOTE: THE CRITERIA FOR NO-PASSING ZONES CAN BE FOUND IN THE MDOT ROADWAY DESIGN MANUAL, SECTION 11-1.01.

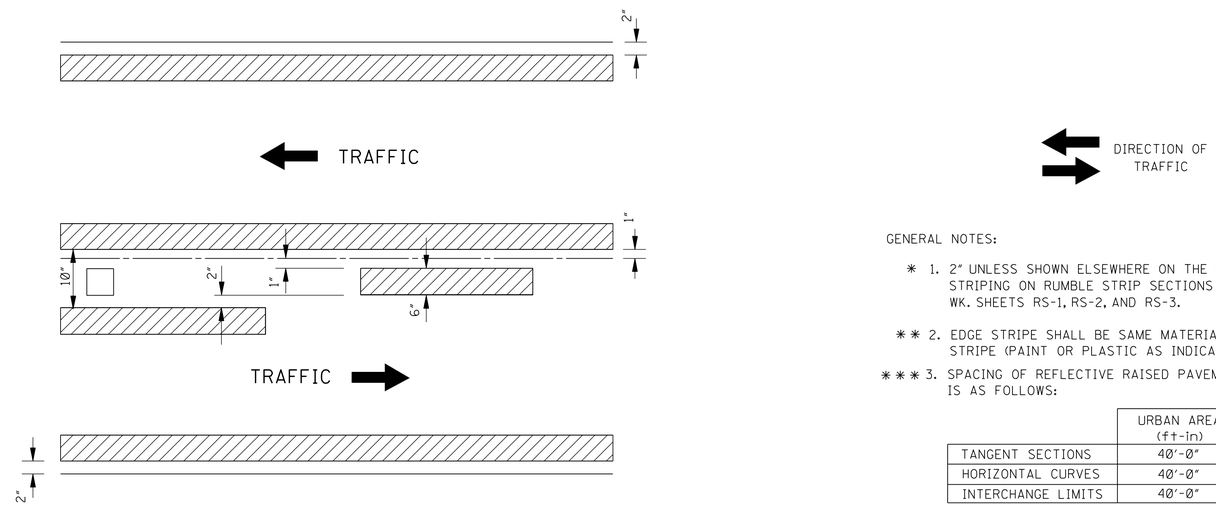


## DETAIL "A"

GENERAL NOTES:

* 1. 2" UNLESS SHOWN ELSEWHERE ON THE PLANS. FOR STRIPING ON RUMBLE STRIP SECTIONS REFER TO WK. SHEETS RS-1, RS-2, AND RS-3.

** 2. EDGE STRIPE SHALL BE SAME MATERIAL AS LANE-LINE STRIPE (PAINT OR PLASTIC AS INDICATED IN PAY ITEMS).

*** 3. SPACING OF REFLECTIVE RAISED PAVEMENT MARKERS IS AS FOLLOWS:

| | URBAN AREA (ft-in) | RURAL AREA (ft-in) |
|---|---|---|
| TANGENT SECTIONS | 40'-0" | 80'-0" |
| HORIZONTAL CURVES | 40'-0" | 40'-0" |
| INTERCHANGE LIMITS | 40'-0" | † 40'-0" |

† NOTE: ON THE MAIN FACILITY, REFLECTIVE RED-CLEAR RAISED PAVEMENT MARKERS ON A 40'-0" SPACING WILL BE REQUIRED ON LANE-LINE(S) THROUGH ALL INTERCHANGE AREAS BEGINNING 1000' IN ADVANCE (IN DIRECTION OF TRAFFIC) OF THE EXIT RAMP TAPER AND CONTINUING THROUGH THE INTERCHANGE TO THE END OF THE ENTRANCE RAMP TAPER.

4. PAVEMENT MARKERS SHALL BE HIGH PERFORMANCE REFLECTIVE RAISED PAVEMENT MARKERS AS LISTED IN THE MDOT "APPROVED SOURCES OF MATERIALS."

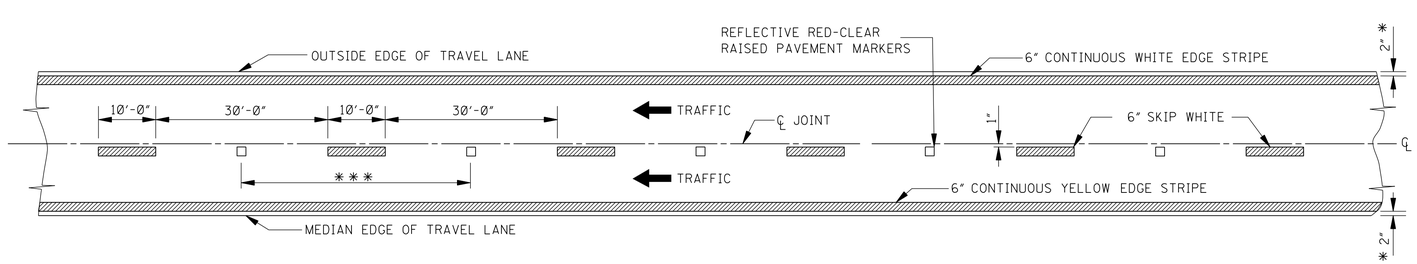


## 4–LANE WITH ONE–WAY TRAFFIC

| DATE | REVISION | BY |
|---|---|---|
| | | |

MISSISSIPPI DEPARTMENT OF TRANSPORTATION
ROADWAY DESIGN DIVISION
STANDARD PLAN

**PAVEMENT MARKING DETAILS FOR 2–LANE AND 4–LANE DIVIDED ROADWAYS**

MDOT MISSISSIPPI DEPARTMENT OF TRANSPORTATION

WORKING NUMBER PM-1

ISSUE DATE: AUGUST 01, 2017

SHEET NUMBER 6051

| STATE | PROJECT NO. |
|---|---|
| MISS. | |

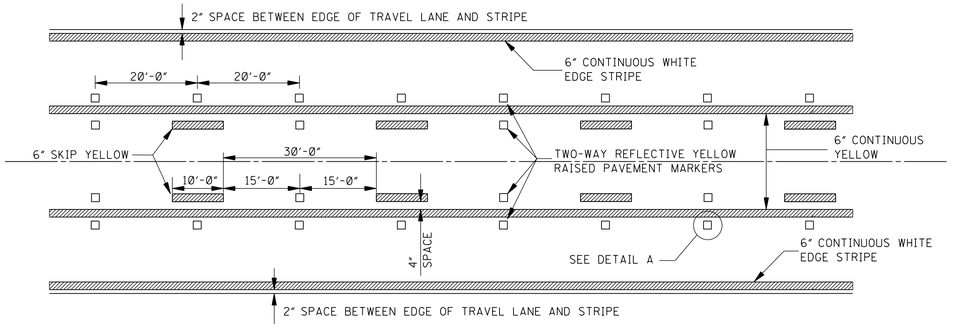


TYPICAL STRIPING AND RAISED PAVEMENT MARKERS FOR 3–LANE SECTION

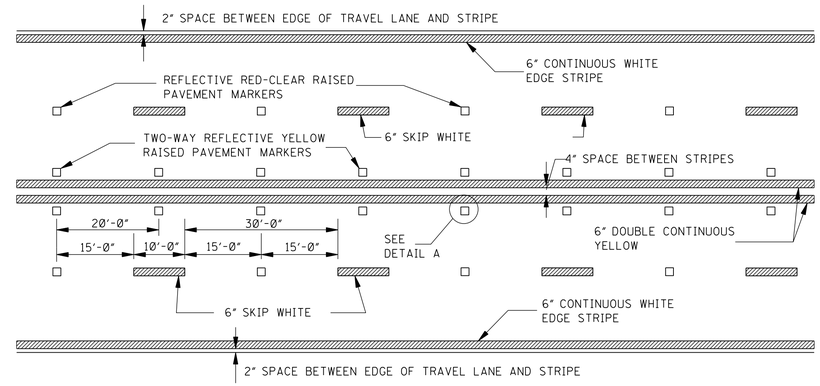


TYPICAL STRIPING AND RAISED PAVEMENT MARKERS FOR 4–LANE SECTION

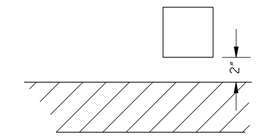


DETAIL A
LATERAL PLACEMENT OF PAVEMENT MARKERS

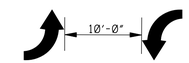


TYPICAL TWO–WAY ARROW INSTALLATION

NOTES: 1. CONSIDER EACH SEGMENT OF CONTINUOUS TWO-WAY LEFT TURN LANE SEPARATELY.
2. IF SEGMENT IS LESS THAN 350', PLACE ONE SET OF ARROWS IN CENTER OF SEGMENT.
3. IF SEGMENT IS GREATER THAN 350', PLACE FIRST SET OF ARROWS 50' TO 100'. FROM BEGINNING AND/OR END OF SEGMENT AND SPACE ADDITIONAL SETS OF ARROWS (250' O.C.).

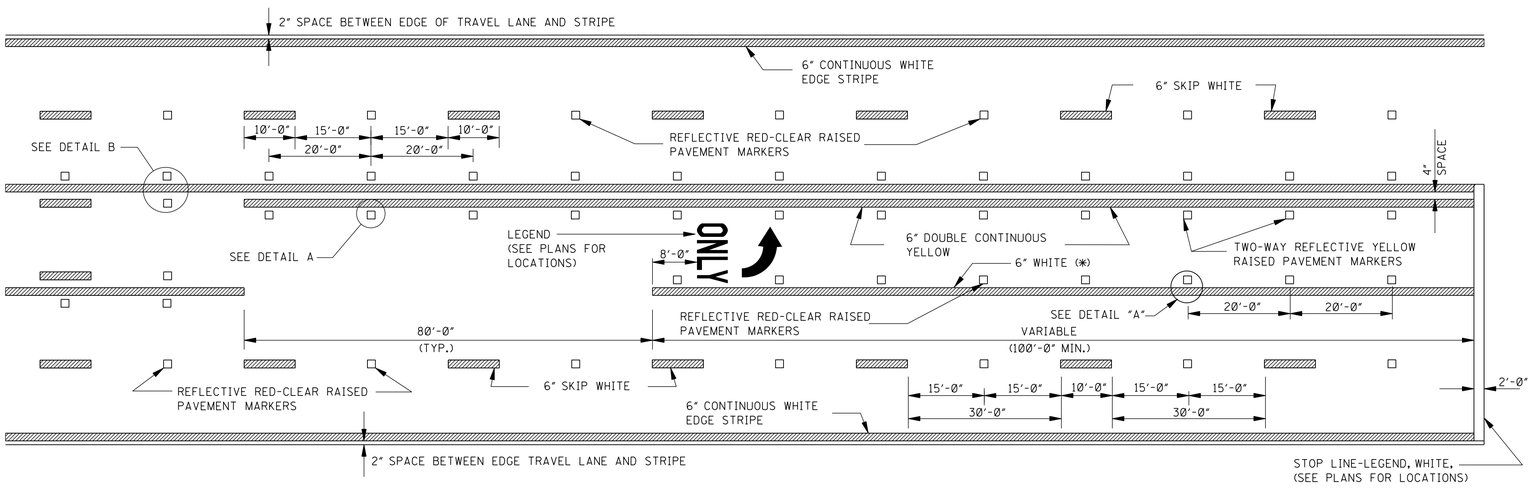


TYPICAL STRIPING AND RAISED PAVEMENT MARKERS AT LEFT TURN LANES

* NOTE: USE DETAIL STRIPING IF LENGTH < 150' AT THIS LOCATION, OTHERWISE USE CONTINUOUS STRIPING.

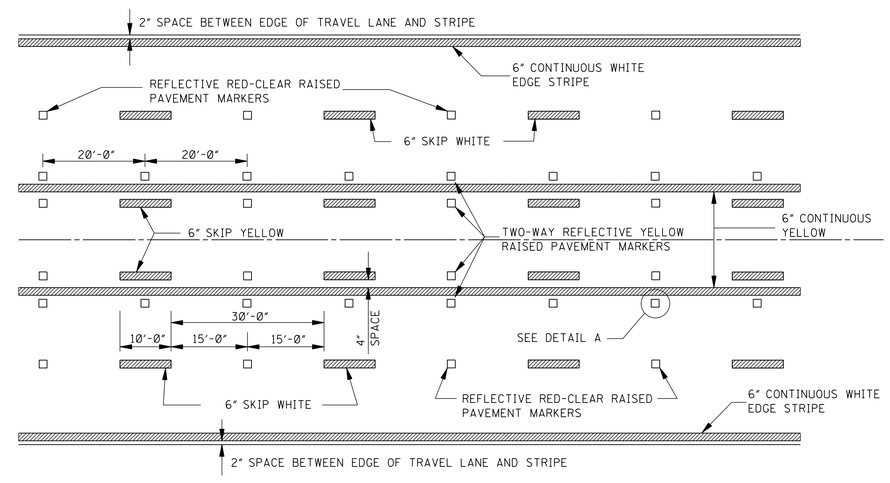


TYPICAL STRIPING AND RAISED PAVEMENT MARKERS FOR 5–LANE SECTION

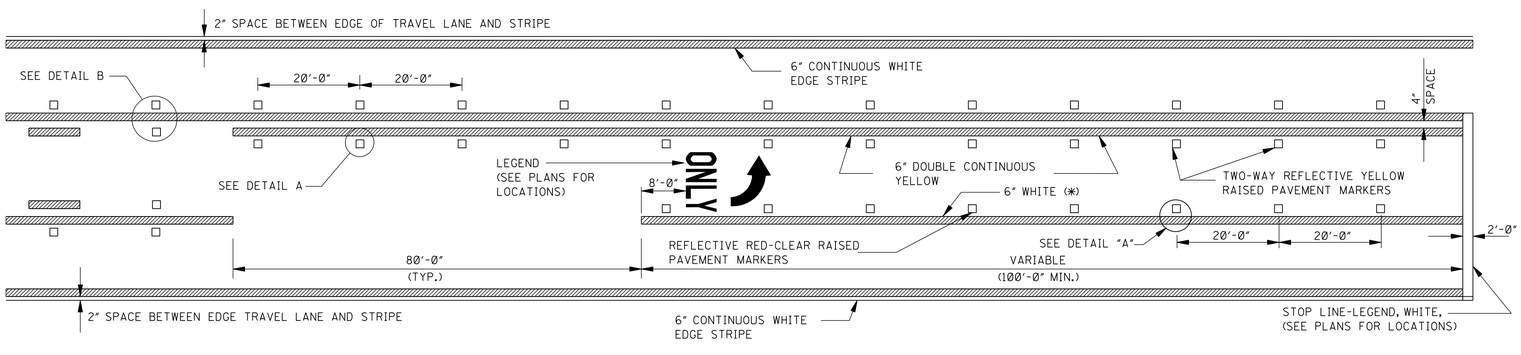


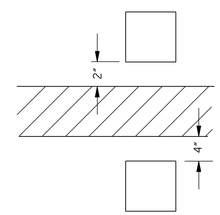


DETAIL B
LATERAL PLACEMENT OF PAVEMENT MARKERS

GENERAL NOTE:

1. PAVEMENT MARKERS SHALL BE HIGH PERFORMANCE RAISED PAVEMENT MARKERS AS LISTED IN THE MDOT "APPROVED SOURCES OF MATERIALS".

| DATE | REVISION | BY |
|---|---|---|
| | | |

MISSISSIPPI DEPARTMENT OF TRANSPORTATION
ROADWAY DESIGN DIVISION
STANDARD PLAN

**PAVEMENT MARKING DETAILS FOR 3–LANE 4–LANE AND 5–LANE UNDIVIDED ROADWAYS**

MDOT MISSISSIPPI DEPARTMENT OF TRANSPORTATION

WORKING NUMBER PM-2

ISSUE DATE: AUGUST 01, 2017

SHEET NUMBER 6052

| STATE | PROJECT NO. |
|---|---|
| MISS. | |

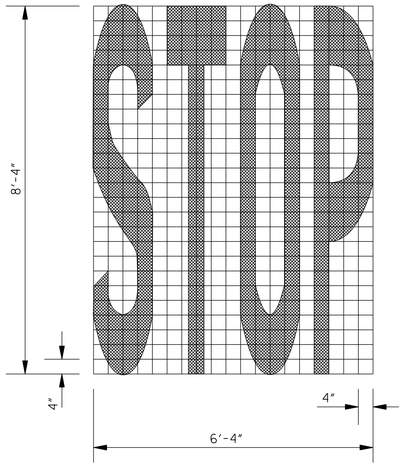


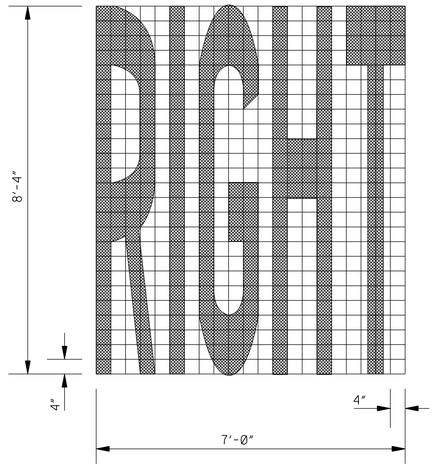


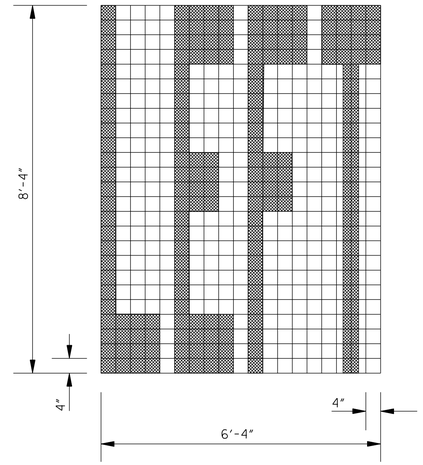


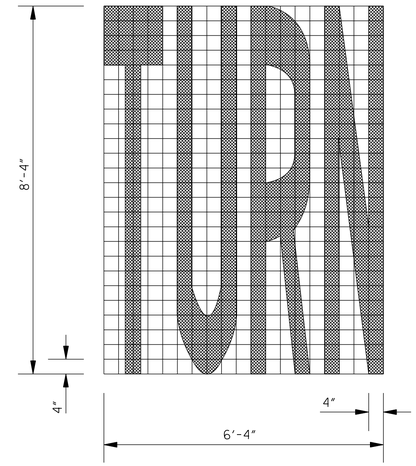


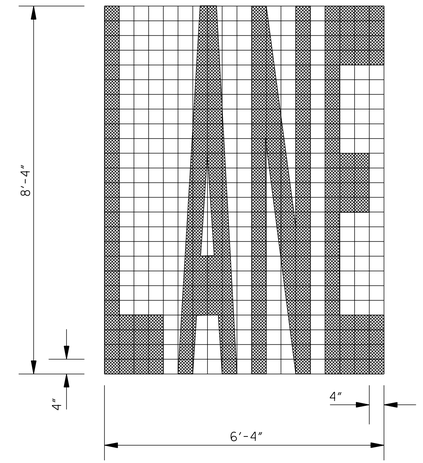


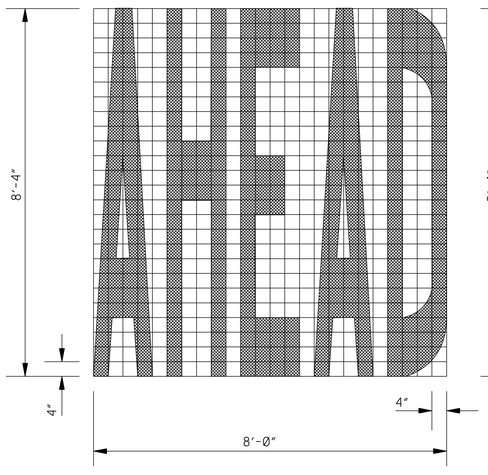


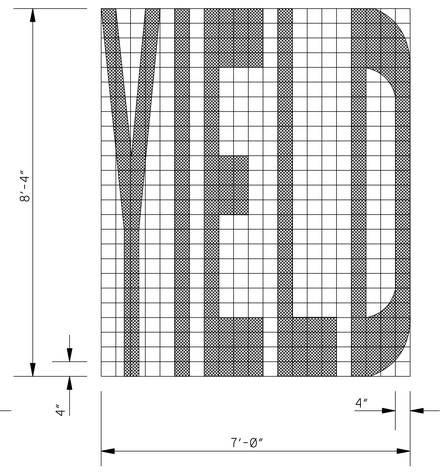


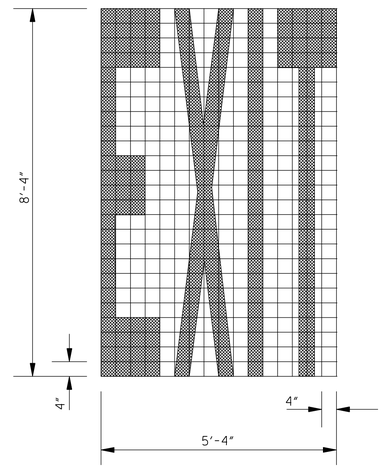


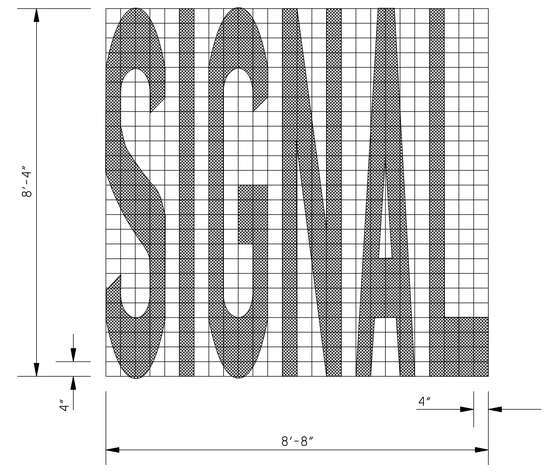


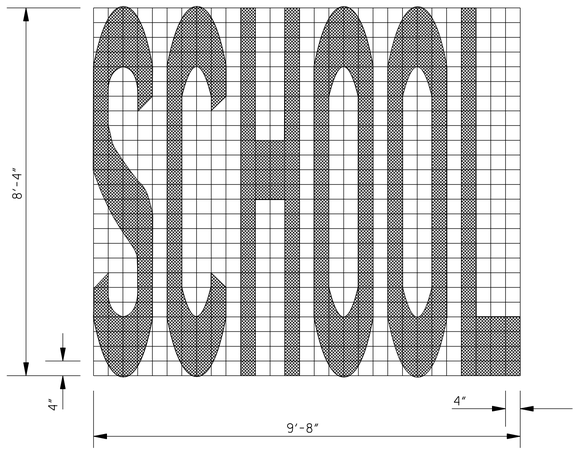


GENERAL NOTES:

1. TWO HORIZONTAL GAPS (CAUSED BY TEMPLATE CONNECTORS) OF 1½" OR LESS AND EXTENDING THE FULL WIDTH ARE PERMITTED IN EACH LETTER.
2. FOR OTHER DETAILS, SEE THE MANUAL ON UNIFORM TRAFFIC CONTROL DEVICES.
3. PAY QUANTITIES FOR PAVEMENT MARKING LEGENDS ARE AS FOLLOWS:

| PAY QUANTITIES | |
|---|---|
| LEGEND | AREA ($ft^2$) |
| STOP | 24.6 |
| RIGHT | 28.6 |
| LEFT | 19.5 |
| TURN | 27.3 |
| LANE | 22.7 |
| AHEAD | 32.3 |
| YIELD | 26.8 |
| EXIT | 18.5 |
| SIGNAL | 32.5 |
| SCHOOL | 35.5 |

| DATE | REVISION | BY |
|---|---|---|
| | | |

MISSISSIPPI DEPARTMENT OF TRANSPORTATION
ROADWAY DESIGN DIVISION
STANDARD PLAN

**PAVEMENT MARKING LEGEND DETAILS**

MDOT MISSISSIPPI DEPARTMENT OF TRANSPORTATION

WORKING NUMBER PM-5

ISSUE DATE: AUGUST 01, 2017

SHEET NUMBER 6055

| STATE | PROJECT NO. |
|---|---|
| MISS. | |

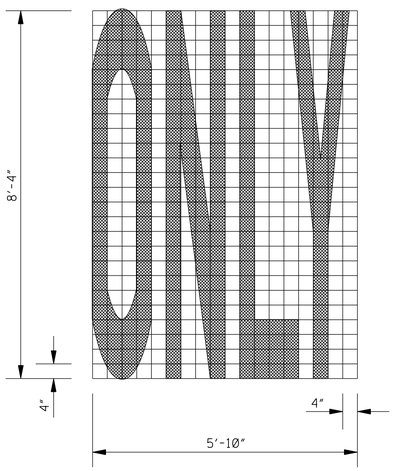


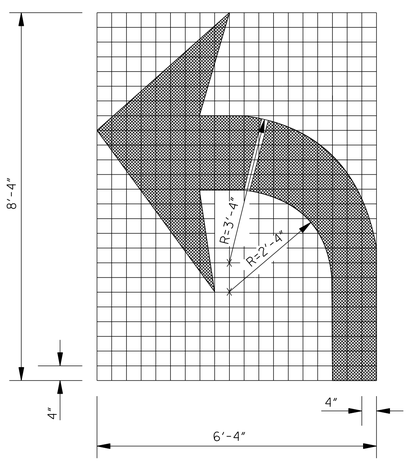


TURN ARROW

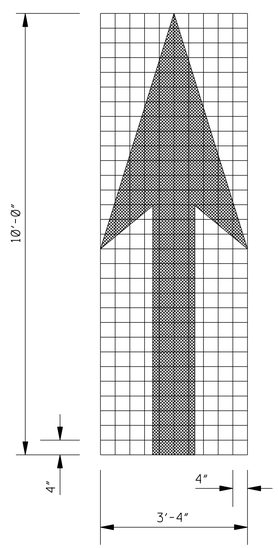


THRU ARROW

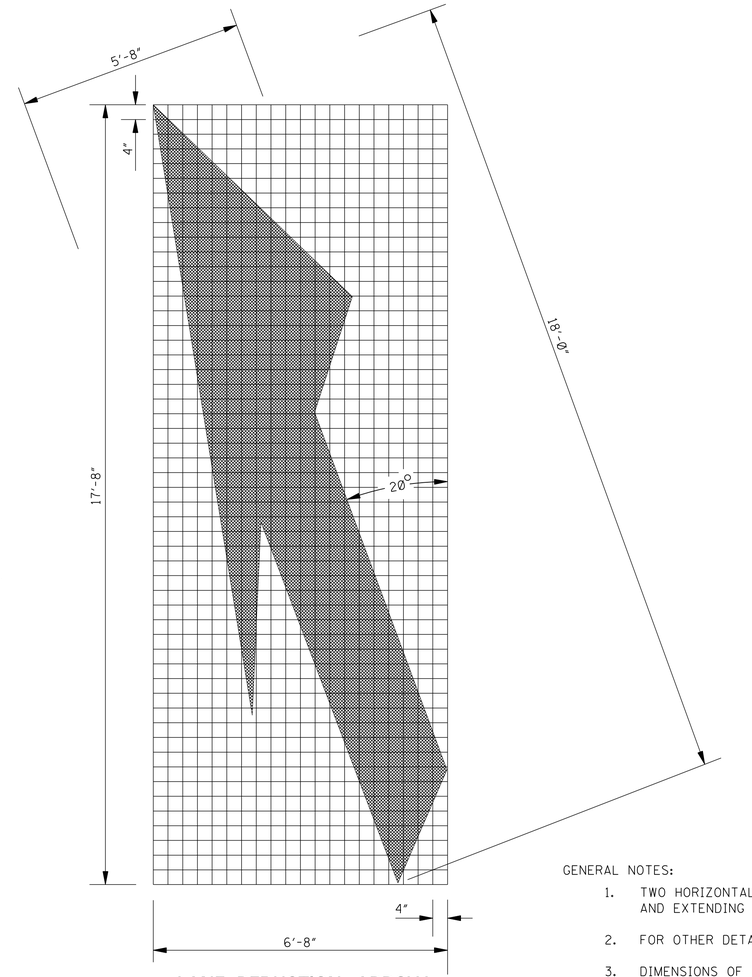


LANE–REDUCTION ARROW

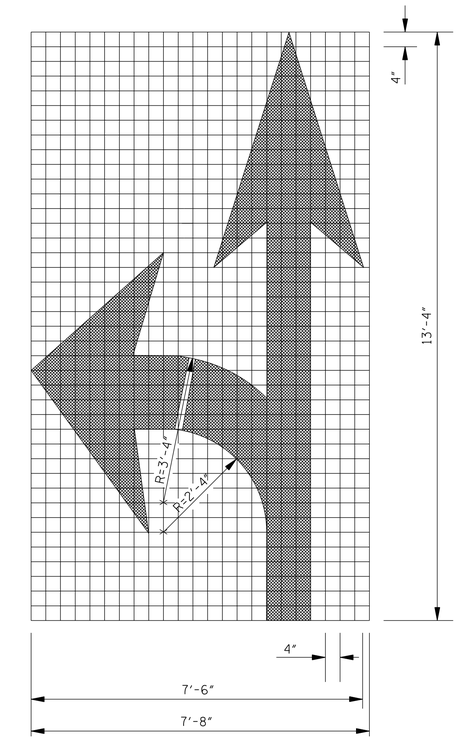


COMBINATION ARROW

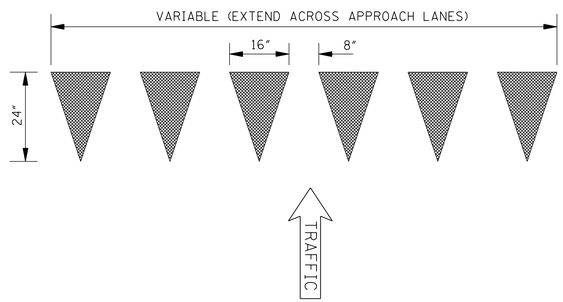


YIELD LINE

GENERAL NOTES:

1. TWO HORIZONTAL GAPS (CAUSED BY TEMPLATE CONNECTORS) OF 1½" OR LESS AND EXTENDING THE FULL WIDTH ARE PERMITTED IN EACH LETTER.
2. FOR OTHER DETAILS, SEE THE MANUAL ON UNIFORM TRAFFIC CONTROL DEVICES.
3. DIMENSIONS OF THE YIELD LINE MAY VARY WITH APPROVAL OF THE ENGINEER. SEE MUTCD, LATEST EDITION, FOR ALLOWABLE DIMENSIONS.
4. PAY QUANTITIES FOR PAVEMENT MARKING LEGENDS ARE AS FOLLOWS:

| PAY QUANTITIES | |
|---|---|
| LEGEND/SYMBOL | AREA ($ft^2$) |
| ONLY | 22.0 |
| TURN ARROW | 16.4 |
| THRU ARROW | 12.3 |
| COMB. ARROW | 27.5 |
| 1-WAY ARROW | 24.3 |
| LANE REDUCTION ARROW | 40.0 |

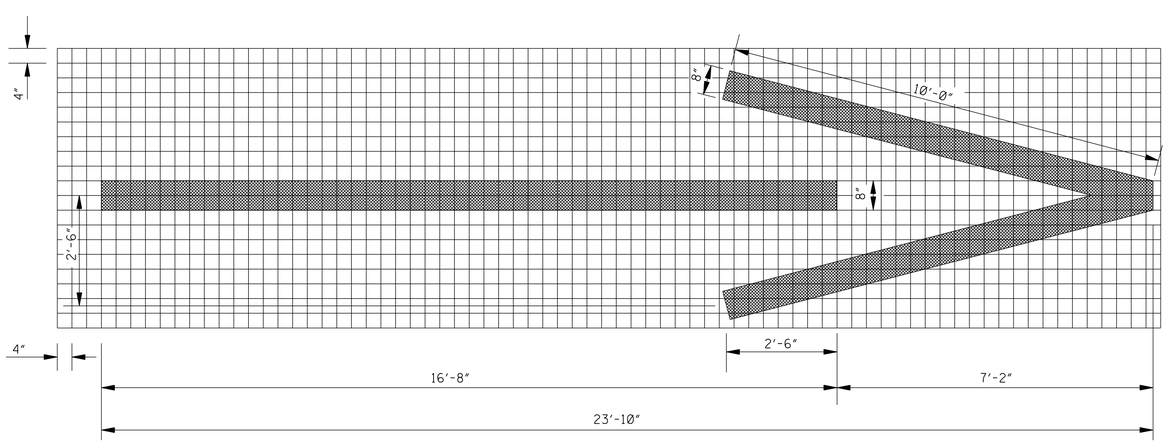


1–WAY ARROW

| DATE | REVISION | BY |
|---|---|---|
| | | |

MISSISSIPPI DEPARTMENT OF TRANSPORTATION
ROADWAY DESIGN DIVISION
STANDARD PLAN

**PAVEMENT MARKING LEGEND DETAILS**

MDOT MISSISSIPPI DEPARTMENT OF TRANSPORTATION

WORKING NUMBER PM-6

ISSUE DATE: AUGUST 01, 2017

SHEET NUMBER 6056

| STATE | PROJECT NO. |
|---|---|
| MISS. | |

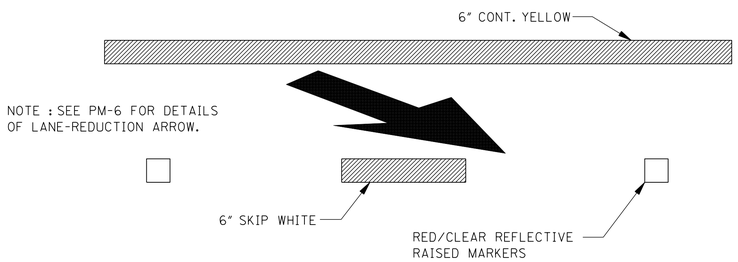


DETAIL F

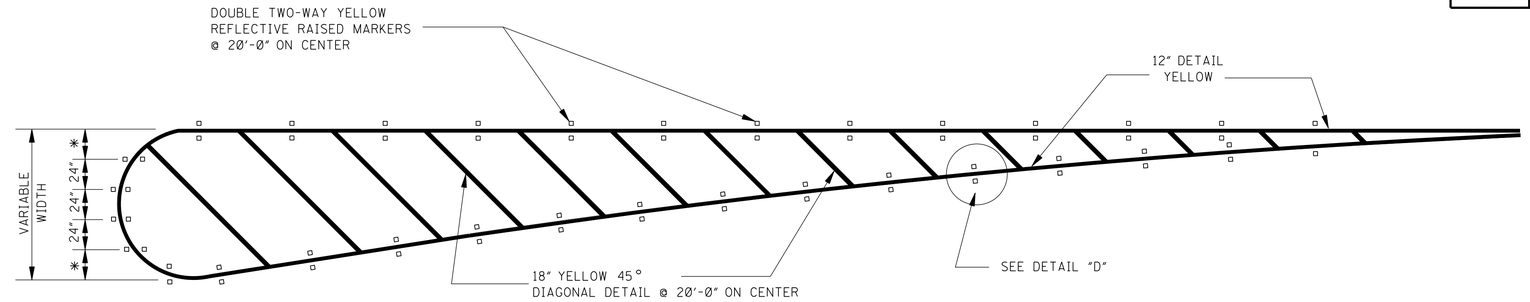


DETAIL A

*NOTE: VARIABLE (24" MAXIMUM)

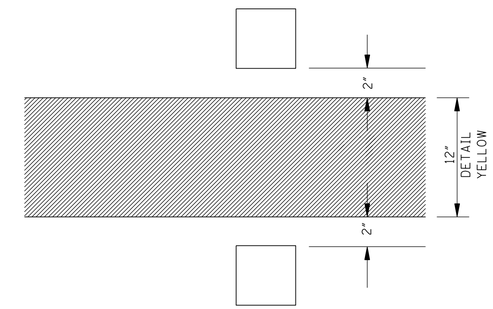


DETAIL D

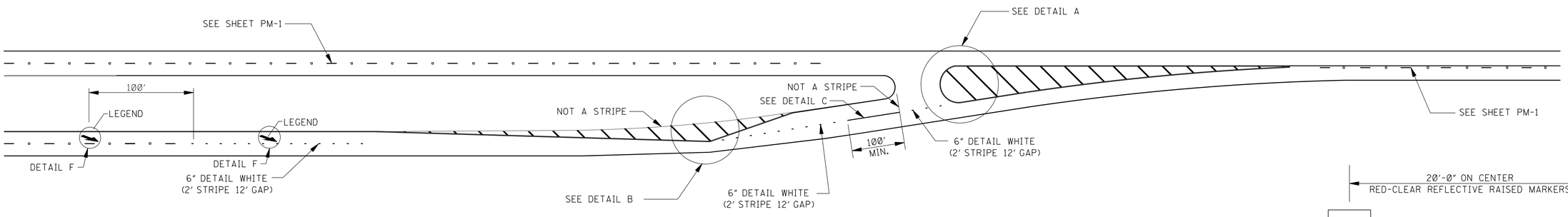


PLAN

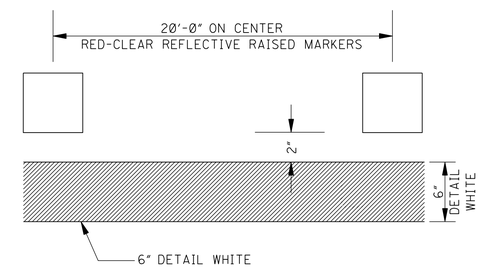


DETAIL C

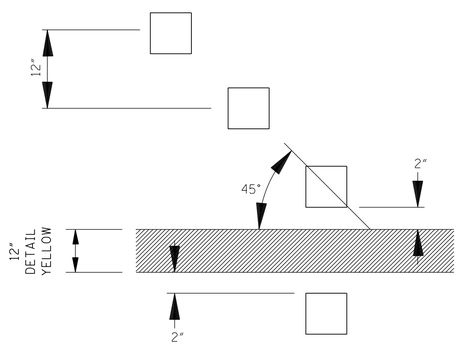


DETAIL E

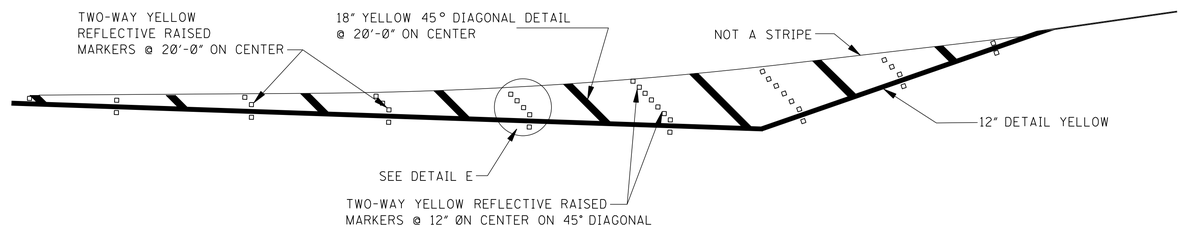


DETAIL B

| DATE | REVISION | BY |
|---|---|---|
| | | |

MISSISSIPPI DEPARTMENT OF TRANSPORTATION
ROADWAY DESIGN DIVISION
STANDARD PLAN

**4-LANE TO 2-LANE TRANSITION AT INTERCHANGE**

MDOT MISSISSIPPI DEPARTMENT OF TRANSPORTATION

WORKING NUMBER
PM-8

ISSUE DATE: AUGUST 01, 2017

SHEET NUMBER
6058

| STATE | PROJECT NO. |
|---|---|
| MISS. | |

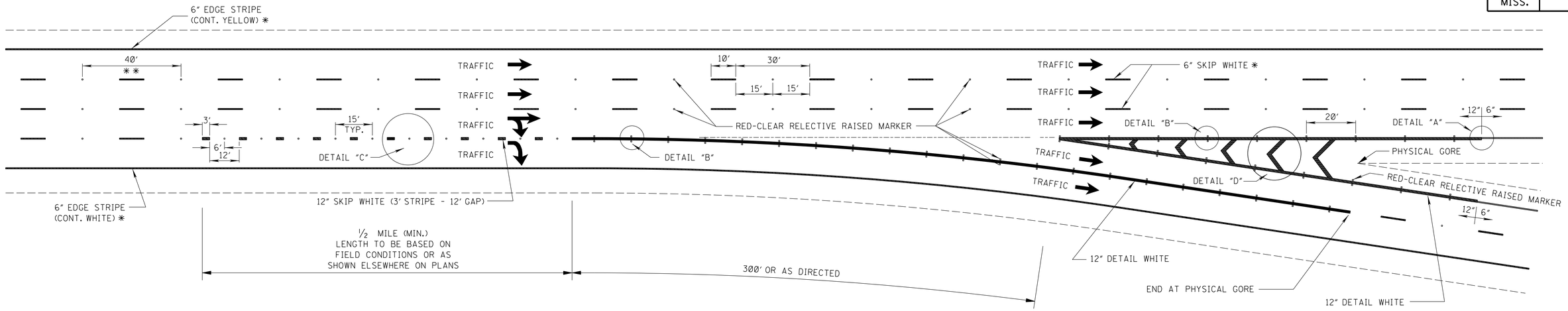


## LANE DROP AT DUAL LANE RAMP

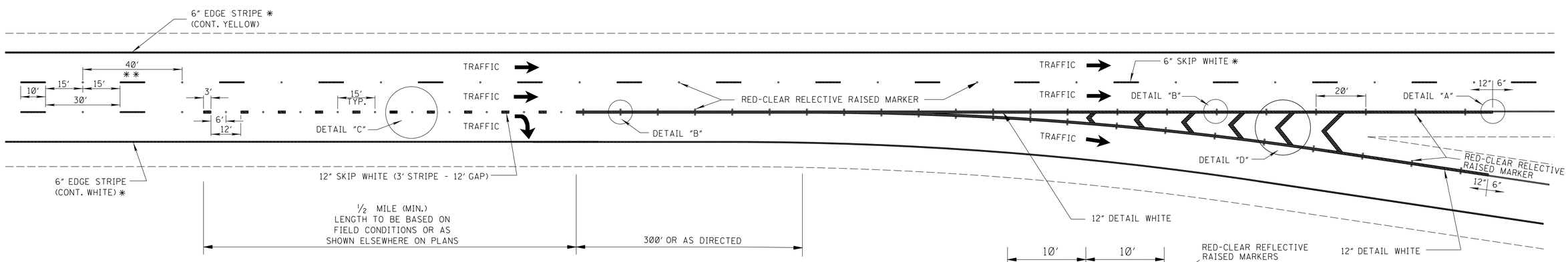


## LANE DROP AT SINGLE LANE RAMP

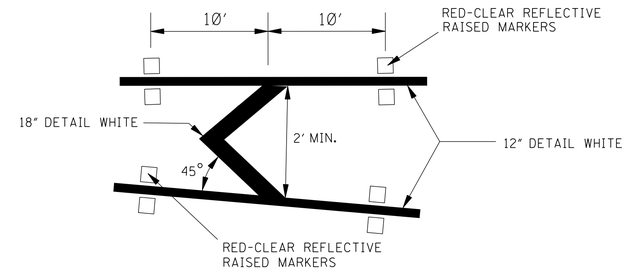


## DETAIL D

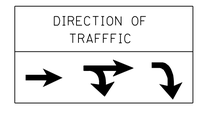


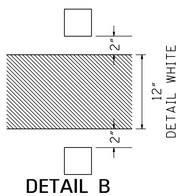


## DETAIL B

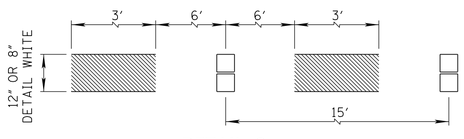


## DETAIL C

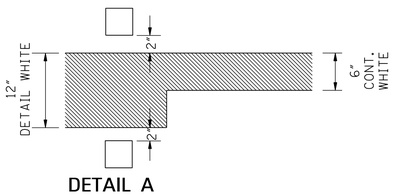


## DETAIL A

GENERAL NOTES:

* 1. SEE SHEET PM-1 FOR THE PLACEMENT OF LANE-LINE STRIPE WITH RESPECT TO THE PAVEMENT JOINT AND FOR THE PLACEMENT OF THE EDGE LINE WITH RESPECT TO THE OUTSIDE EDGE OF THE TRAVELED WAY.

** 2. ON THE MAIN FACILITY, REFLECTIVE RED-CLEAR RAISED PAVEMENT MARKERS ON A 40'-0" SPACING WILL BE REQUIRED ON LANE-LINE(S) THROUGH ALL INTERCHANGE AREAS BEGINNING 1000' IN ADVANCE (IN DIRECTION OF TRAFFIC) OF THE EXIT RAMP TAPER AND CONTINUING THROUGH THE INTERCHANGE TO THE END OF THE ENTRANCE RAMP TAPER.

3. PAVEMENT MARKERS SHALL BE HIGH PERFORMANCE REFLECTIVE RAISED PAVEMENT MARKERS AS LISTED IN THE MDOT "APPROVED SOURCES OF MATERIALS".

| DATE | REVISION | BY |
|---|---|---|
| | | |

MISSISSIPPI DEPARTMENT OF TRANSPORTATION
ROADWAY DESIGN DIVISION
STANDARD PLAN

# PAVEMENT MARKING DETAILS FOR INTERCHANGE WITH LANE DROPS

MDOT MISSISSIPPI DEPARTMENT OF TRANSPORTATION

WORKING NUMBER PM-10

ISSUE DATE: AUGUST 01, 2017

SHEET NUMBER 6060

| STATE | PROJECT NO. |
|---|---|
| MISS. | |

| SIGN NUMBER | D9-2 | | D10-1 | D10-2 | D10-3 | D10-1a | D10-2a | D10-3a | D10-4 | D10-5 | M1-1 | M1-1 | M1-4 | | M1-6 | |
|---|---|---|---|---|---|---|---|---|---|---|---|---|---|---|---|---|
| ALUMINUM (6061-T6) SIGN BLANK THICKNESS | 0.080" | | 0.080" | 0.080" | 0.100" | 0.080" | 0.100" | 0.100" | 0.100" | 0.100" | 0.080" | 0.100" | 0.080" | | 0.080" | |
| LEGEND | R = 1½" R = 1⅞" | | R = 1½" | R = 1½" | R = 1½" | R = 1½" | R = 1½" | R = 1½" | R = 1½" | R = 1½" | | | R = 1½" | | R = 1½" e = 11" (24" X 24") e = VAR. (30" X 24") | |
| LETTER & NUMERAL SERIES | 20" SERIES "E MOD." | 30" SERIES "E MOD." | 4" SERIES "B" 10" SERIES "D" | 4" SERIES "B" 10" SERIES "D" | 4" SERIES "B" 10" SERIES "D" | 4" SERIES "B" 10" SERIES "D" | 4" SERIES "B" 10" SERIES "D" | 4" SERIES "B" 10" SERIES "D" | 6.6", 6" SERIES "B" 6" SERIES "B" 8" | 6.6", 6" SERIES "B" 6" SERIES "B" 8" 8" SERIES "B" | (SEE NOTES 1 & 2 BELOW) | | (SEE NOTES 1 & 2 BELOW) | | 12" SERIES "D" (SEE NOTE BELOW) | |
| WIDTH OF BORDER INSIDE OUTSIDE | ½" WHITE | ¾" WHITE | ½" WHITE | ½" WHITE | ½" WHITE | ½" WHITE | ½" WHITE | ½" WHITE | ½" WHITE | ½" WHITE | ½" WHITE | ¾" WHITE | BLACK OUTSIDE BORDER | | BLACK OUTSIDE BORDER | |
| SIZE (WIDTH X HEIGHT) | 24" X 24" | 36" X 36" | 12" X 24" | 12" X 36" | 12" X 48" | 12" X 36" | 12" X 48" | 12" X 60" | 18" X 54" | 18" X 60" | 24" X 24" (1 OR 2 DIGITS) 30" X 24" (3 DIGITS) | 36" X 36" (1 OR 2 DIGITS) 45" X 36" (3 DIGITS) | 24" X 24" (1 OR 2 DIGITS) 30" X 24" (3 DIGITS) | | 24" X 24" (1 OR 2 DIGITS) 30" X 24" (3 DIGITS) | |
| COLORS COPY BACKGROUND | WHITE BLUE | WHITE BLUE | WHITE GREEN | WHITE GREEN | WHITE GREEN | WHITE GREEN | WHITE GREEN | WHITE GREEN | WHITE, RED, BLUE GREEN | WHITE, RED, BLUE GREEN | WHITE TOP-RED; BOTTOM-BLUE | | BLACK WHITE | | BLACK WHITE | |
| REFLECTORIZATION | ALL | ALL | ALL | ALL | ALL | ALL | ALL | ALL | ALL | ALL | ALL | | BACKGROUND | | BACKGROUND | |
| NUMBER OF POSTS FOR MOUNTING | 1 | 1 | 1 | 1 | 1 | 1 | 1 | 1 | 1 | 1 | 1 | | 1 | | 1 | |
| NUMBER OF HOLES TO BE PUNCHED (⅜" DIA.) | 2 | 2 | 2 | 2 | 2 | 2 | 2 | 2 | 2 | 2 | 2 | 4 | 2 (VERT. PUNCHING) | 2 (HORIZ. PUNCHING) | 2 (VERT. PUNCHING) | 2 (HORIZ. PUNCHING) |
| PUNCHING DISTANCE FROM EACH VERTICAL EDGE | 12" (VERT. CENTER) | 18" (VERT. CENTER) | 6" (VERT. CENTER) | 6" (VERT. CENTER) | 6" (VERT. CENTER) | 6" (VERT. CENTER) | 6" (VERT. CENTER) | 6" (VERT. CENTER) | 9" (VERT. CENTER) | 9" (VERT. CENTER) | VERT. CENTER | 5" FROM VERT. CENTER | VERT. CENTER | 12" FROM VERT. CENTER | VERT. CENTER | 12" FROM VERT. CENTER |
| PUNCHING DISTANCE FROM TOP EDGE | 3"; 21" | 6"; 30" | 3"; 21" | 3"; 33" | 6"; 42" | 3"; 33" | 6"; 42" | 6"; 54" | 6"; 48" | 6"; 54" | 3"; 21" | 6";30" | 3"; 21" | 3"; 21" | 3"; 21" | 3"; 21" |

| SIGN NUMBER | M2-1 | M2-1A | M3-3* | M3-3A* | M3-103A* | M4-5 | M4-5A | M5-1L | M5-1LA | M5-1R | M5-1RA | M5-2L | M5-2LA | M5-2R | M5-2RA | M6-1L | M6-1LA | M6-1R | M6-1RA | M6-2L | M6-2LA | M6-2R | M6-2RA | M6-3 | M6-3A |
|---|---|---|---|---|---|---|---|---|---|---|---|---|---|---|---|---|---|---|---|---|---|---|---|---|---|
| ALUMINUM (6061-T6) SIGN BLANK THICKNESS | 0.080" | | 0.080" | | 0.080" | 0.080" | | 0.080" | | 0.080" | | 0.080" | | 0.080" | | 0.080" | | 0.080" | | 0.080" | | 0.080" | | 0.080" | |
| LEGEND | R = 1½" | | R = 1½" | | R = 1½" | R = 1½" | | R = 1½" | | R = 1½" | | R = 1½" | | R = 1½" | | R = 1½" | | R = 1½" | | R = 1½" | | R = 1½" | | R = 1½" | |
| LETTER & NUMERAL SERIES | 9" SERIES "C" | | 7" SERIES "C" 6" SERIES "C" | | 10" SERIES "C" 8" SERIES "C" | 6" SERIES "E" | | | | | | | | | | | | | | | | | | | |
| WIDTH OF BORDER INSIDE OUTSIDE | ⅝" BLACK ⅜" WHITE | ½" WHITE | ⅝" BLACK ⅜" WHITE | ½" WHITE | ½" WHITE | ⅝" BLACK ⅜" WHITE | ½" WHITE | ⅝" BLACK ⅜" WHITE | ½" WHITE | ⅝" BLACK ⅜" WHITE | ½" WHITE | ⅝" BLACK ⅜" WHITE | ½" WHITE | ⅝" BLACK ⅜" WHITE | ½" WHITE | ⅝" BLACK ⅜" WHITE | ½" WHITE | ⅝" BLACK ⅜" WHITE | ½" WHITE | ⅝" BLACK ⅜" WHITE | ½" WHITE | ⅝" BLACK ⅜" WHITE | ½" WHITE | ⅝" BLACK ⅜" WHITE | ½" WHITE |
| SIZE (WIDTH X HEIGHT) | 21" X 15" | | 24" X 12" | | 30" X 15" | 24" X 12" | | 21" X 15" | | 21" X 15" | | 21" X 15" | | 21" X 15" | | 21" X 15" | | 21" X 15" | | 21" X 15" | | 21" X 15" | | 21" X 15" | |
| COLORS COPY BACKGROUND | BLACK WHITE | WHITE BLUE | BLACK WHITE | WHITE BLUE | WHITE BLUE | BLACK WHITE | WHITE BLUE | BLACK WHITE | WHITE BLUE | BLACK WHITE | WHITE BLUE | BLACK WHITE | WHITE BLUE | BLACK WHITE | WHITE BLUE | BLACK WHITE | WHITE BLUE | BLACK WHITE | WHITE BLUE | BLACK WHITE | WHITE BLUE | BLACK WHITE | WHITE BLUE | BLACK WHITE | WHITE BLUE |
| REFLECTORIZATION | B'GROUND | ALL | B'GROUND | ALL | ALL | B'GROUND | ALL | B'GROUND | ALL | B'GROUND | ALL | B'GROUND | ALL | B'GROUND | ALL | B'GROUND | ALL | B'GROUND | ALL | B'GROUND | ALL | B'GROUND | ALL | B'GROUND | ALL |
| NUMBER OF POSTS FOR MOUNTING | 1 | | 1 | | 1 | 1 | | 1 | | 1 | | 1 | | 1 | | 1 | | 1 | | 1 | | 1 | | 1 | |
| NUMBER OF HOLES TO BE PUNCHED (⅜" DIA.) | 2 | | 2 | | 2 | 2 | | 2 | | 2 | | 2 | | 2 | | 2 | | 2 | | 2 | | 2 | | 2 | |
| PUNCHING DISTANCE FROM EACH VERTICAL EDGE | VERT. CENTER | | 12" (V. PUNCH) 7" (H.PUNCH) | 12" | VERT. CENTER | 12" (VERT. CENTER) | | VERT. CENTER | | VERT. CENTER | | VERT. CENTER | | VERT. CENTER | | VERT. CENTER | | VERT. CENTER | | VERT. CENTER | | VERT. CENTER | | VERT. CENTER | |
| PUNCHING DISTANCE FROM TOP EDGE | 1½"; 13½" | | 1½": 10½" (V.) 6" (H.) | 1½"; 10½" | 1½"; 13½" | 1½"; 10½" | | 1½"; 13½" | | 1½"; 13½" | | 1½"; 13½" | | 1½"; 13½" | | 1½"; 13½" | | 1½"; 13½" | | 1½"; 13½" | | 1½"; 13½" | | 1½"; 13½" | |

GENERAL NOTES:

1. THE DIMENSIONS FOR THE INTERSTATE AND U.S. SHIELDS SHALL CONFORM WITH THOSE SHOWN IN THE MANUAL ON UNIFORM TRAFFIC CONTROL DEVICES, LATEST EDITION.
2. ROUTE MARKERS AND SHIELDS SHOWN ON THIS SHEET ARE FOR USE INDEPENDENTLY OF INTERSTATE DIRECTIONAL (GUIDE) SIGNS. SEE OTHER DRAWINGS FOR SHIELDS TO BE USED ON INTERSTATE DIRECTIONAL (GUIDE) SIGNS.
3. THE QUANTITIES LISTED ON THE SUMMARY OF QUANTITIES SHEET FOR THE SIGNS SHOWN ON THIS SHEET WILL BE USED AS THE BASIS FOR FINAL PAYMENT, EXCEPT WHERE SIGNS ARE MODIFIED FROM THAT SHOWN.
4. M1-6: IN SOME CASES NUMERALS CANNOT BE ACCOMMODATED WITHIN THE SPACE AVAILABLE. FOR THESE SITUATIONS, THE STANDARD SERIES "D" NUMERAL SHALL BE REDUCED TO SERIES "C".

*

| NORTH | EAST | SOUTH | WEST |
|---|---|---|---|
| M3-1 | M3-2 | M3-3 | M3-4 |
| M3-1A | M3-2A | M3-3A | M3-4A |
| M3-101A | M3-102A | M3-103A | M3-104A |

| | | |
|---|---|---|
| BY | MISSISSIPPI DEPARTMENT OF TRANSPORTATION<br>ROADWAY DESIGN DIVISION<br>STANDARD PLAN | |
| REVISION | **STANDARD ROADSIDE SIGNS** | WORKING NUMBER SN-3 |
| DATE | ISSUE DATE: AUGUST 01, 2017 | SHEET NUMBER 6303 |

| STATE | PROJECT NO. |
|---|---|
| MISS. | |

| SIGN NUMBER | R1-1 | | R1-2 | | | R2-1 | | | R2-4a | R3-1 | | R3-2 | | R3-4 | | R3-5 | R4-3 | |
|---|---|---|---|---|---|---|---|---|---|---|---|---|---|---|---|---|---|---|
| ALUMINUM (6061-T6) SIGN BLANK THICKNESS | 0.100″ | 0.125″ | 0.080″ | 0.100″ | 0.125″ | 0.080″ | 0.100″ | 0.125″ | 0.125″ | 0.080″ | 0.100″ | 0.080″ | 0.100″ | 0.080″ | 0.100″ | 0.080″ | 0.100″ | 0.125″ |
| LEGEND | | | 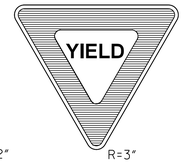  R=2″ R=3″ | | R=4″ | R=1½″ | R=2¼″ | R=3″ | R=3″ | R=1½″ | R=2¼″ | R=1½″ | R=2¼″ | R=1½″ | R=2¼″ | R=1⅞″ | R=2¼″ R=3″ | |
| LETTER & NUMERAL SERIES | 12″ SERIES"C" | 16″ SERIES"C" | 3″ SERIES "C" | | 5″ SERIES "C" | 4″ SERIES "E"<br>4″ SERIES "E"<br>10″ SERIES "E" | 6″ SERIES "E"<br>6″ SERIES "E"<br>14″ SERIES "E" | 8″ SERIES "E"<br>8″ SERIES "E"<br>16″ SERIES "E" | 8″ SERIES "E"<br>16″ SERIES "E"<br>8″ SERIES "C"<br>14″ SERIES "D" | | | | | | | 6″ SERIES "D" | 6″ SERIES "D" | 8″ SERIES "D" |
| WIDTH OF BORDER INSIDE | | | 5″ RED | 6″ RED | 8″ RED | ⅝″ BLACK | ⅞″ BLACK | 1¼″ BLACK | ⅞″ BLACK | ⅝″ BLACK | ⅞″ BLACK | ⅝″ BLACK | ⅞″ BLACK | ⅝″ BLACK | ⅞″ BLACK | ¾″ BLACK | ⅞″ BLACK | 1¼″ BLACK |
| WIDTH OF BORDER OUTSIDE | ⅞″ WHITE | 1¼″ WHITE | ¾″ WHITE | 1″ WHITE | 1½″ WHITE | ⅜″ WHITE | ⅝″ WHITE | ¾″ WHITE | ¾″ WHITE | ⅜″ WHITE | ⅝″ WHITE | ⅜″ WHITE | ⅝″ WHITE | ⅜″ WHITE | ⅝″ WHITE | ½″ WHITE | ⅝″ WHITE | ¾″ WHITE |
| SIZE (WIDTH X HEIGHT) | 36″ OCTAGON | 48″ OCTAGON | 36″ EQUIL. TRIANGLE | 48″ EQUIL. TRIANGLE | 60″ EQUIL. TRIANGLE | 24″ X 30″ | 36″ X 48″ | 48″ X 60″ | 48″ X 96″ | 24″ X 24″ | 36″ X 36″ | 24″ X 24″ | 36″ X 36″ | 24″ X 24″ | 36″ X 36″ | 30″ X 36″ | 36″ X 48″ | 48″ X 60″ |
| COLORS COPY | WHITE | WHITE | RED | RED | RED | BLACK | BLACK | BLACK | BLACK | BLACK & RED | BLACK & RED | BLACK & RED | BLACK & RED | BLACK & RED | BLACK & RED | BLACK | BLACK | BLACK |
| COLORS BACKGROUND | RED | RED | WHITE | WHITE | WHITE | WHITE | WHITE | WHITE | WHITE | WHITE | WHITE | WHITE | WHITE | WHITE | WHITE | WHITE | WHITE | WHITE |
| REFLECTORIZATION | ALL | ALL | ALL | ALL | ALL | B'GROUND | B'GROUND | B'GROUND | BACKGROUND | BACKGROUND, CIRCLE, & DIAG. | BACKGROUND, CIRCLE, & DIAG. | BACKGROUND, CIRCLE, & DIAG. | BACKGROUND, CIRCLE, & DIAG. | BACKGROUND, CIRCLE, & DIAG. | BACKGROUND, CIRCLE, & DIAG. | BACKGROUND | BACKGROUND | BACKGROUND |
| NUMBER OF POSTS FOR MOUNTING | 1 | 1 | 1 | 1 | 1 | 1 | 1 | 1 | 1 | 1 | 1 | 1 | 1 | 1 | 1 | 1 | 1 | 1 |
| NUMBER OF HOLES TO BE PUNCHED (⅜″ DIA.) | 2 | 4 | 2 | 4 | 4 | 2 | 4 | 6 | 10 | 2 | 2 | 2 | 2 | 2 | 2 | 2 | 4 | 6 |
| PUNCHING DISTANCE FROM EACH VERTICAL EDGE | 18″ (VERT. CENTER) | 9″ | 18″ (VERT. CENTER) | 12″ (FROM CENTER) | 15″ (FROM CENTER) | 12″ (VERT. CENTER) | 3″ | 9″ | 9″ | 12″ (VERT. CENTER) | 18″ (VERT. CENTER) | 12″ (VERT. CENTER) | 18″ (VERT. CENTER) | 12″ (VERT. CENTER) | 18″ (VERT. CENTER) | 15″ (VERT. CENTER) | 3″ | 9″ |
| PUNCHING DISTANCE FROM TOP EDGE | 3″; 33″ | 9″; 39″ | 3″; 27″ | 3″; 15″ | 3″; 21″ | 3″; 27″ | 9″; 39″ | 4″; 30″; 56″ | 4″; 28″; 52″; 60″; 92″ | 3″; 21″ | 6″; 30″ | 3″; 21″ | 6″; 30″ | 3″; 21″ | 6″; 30″ | 6″; 30″ | 9″; 39″ | 4″; 30″; 56″ |

| SIGN NUMBER | R4-7 | | | R6-3 | R5-1 | | R5-1a | R6-1L, R6-1R | R6-2L, R6-2R | R8-4 | | R11-1 | |
|---|---|---|---|---|---|---|---|---|---|---|---|---|---|
| ALUMINUM (6061-T6) SIGN BLANK THICKNESS | 0.080″ | 0.125″ | | 0.080″ | 0.100″ | 0.125″ | 0.100″ | 0.080″ | 0.080″ | 0.080″ | 0.100″ | 0.125″ | 0.125″ |
| LEGEND | R=1½″ | R=2¼″ | R=3″ | | 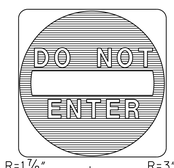  R=1⅞″ | R=3″ | 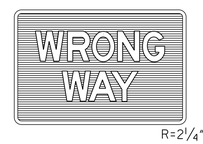  R=2¼″ | R=1½″ | R=1½″ | R=2¼″ | | R=3″ | |
| LETTER & NUMERAL SERIES | | | | | 4″ SERIES "D" | 6″ SERIES "D" | 8″ SERIES "D" | 4″ SERIES "D" | 6″ SERIES "D" | 4″ SERIES "D" | 6″ SERIES "D" | 8″ SERIES "C" | 10″ SERIES "C" |
| WIDTH OF BORDER INSIDE | ⅝″ BLACK | ⅞″ BLACK | 1¼″ BLACK | ⅝″ BLACK | WHITE OUT- | WHITE OUT- | 1″ WHITE | | ⅝″ BLACK | ⅝″ BLACK | ⅞″ BLACK | ⅞″ BLACK | 1¼″ BLACK |
| WIDTH OF BORDER OUTSIDE | ⅜″ WHITE | ⅝″ WHITE | ¾″ WHITE | ⅜″ WHITE | SIDE BORDER | SIDE BORDER | | ½″ WHITE | ⅜″ WHITE | ⅜″ WHITE | ⅝″ WHITE | ⅝″ WHITE | ¾″ WHITE |
| SIZE (WIDTH X HEIGHT) | 24″ X 30″ | 36″ X 48″ | 48″ X 60″ | 30″ X 24″ | 36″ X 36″ | 48″ X 48″ | 42″ X 30″ | 36″ X 12″ | 24″ X 30″ | 30″ X 24″ | 48″ X 36″ | 36″ X 48″ | 48″ X 60″ |
| COLORS COPY | BLACK | BLACK | BLACK | BLACK | WHITE | WHITE | WHITE | BLACK (WHITE ARROW) | BLACK | BLACK | BLACK | BLACK | BLACK |
| COLORS BACKGROUND | WHITE | WHITE | WHITE | WHITE | RED | RED | RED | BLACK | WHITE | WHITE | WHITE | WHITE | WHITE |
| REFLECTORIZATION | BACKGROUND | BACKGROUND | BACKGROUND | BACKGROUND | ALL | ALL | ALL | ARROW & BORDER | BACKGROUND | BACKGROUND | BACKGROUND | BACKGROUND | BACKGROUND |
| NUMBER OF POSTS FOR MOUNTING | 1 | 1 | 1 | 1 | 1 | 1 | 1 | 1 | 1 | 1 | 2 | 1 | 1 |
| NUMBER OF HOLES TO BE PUNCHED (⅜″ DIA.) | 2 | 4 | 6 | 2 | 2 | 4 | 4 | 2 | 2 | 2 | 4 | 4 | 6 |
| PUNCHING DISTANCE FROM EACH VERTICAL EDGE | 12″ (VERT. CENTER) | 3″ | 9″ | 15″ (VERT. CENTER) | 18″ (VERT. CENTER) | 9″ | 9″ | 18″ (VERT. CENTER) | 12″ (VERT. CENTER) | 15″ (VERT. CENTER) | 9″ | 3″ | 9″ |
| PUNCHING DISTANCE FROM TOP EDGE | 3″; 27″ | 9″; 39″ | 4″; 30″; 56″ | 3″; 21″ | 6″; 30″ | 4″; 44″ | 3″; 27″ | 1½″; 10½″ | 3″; 27″ | 3″; 21″ | 3″; 33″ | 9″; 39″ | 4″; 30″; 56″ |

GENERAL NOTES:

1. THE QUANTITIES LISTED ON THE SUMMARY OF QUANTITIES SHEET FOR THE SIGNS SHOWN ON THIS SHEET WILL BE USED AS THE BASIS FOR FINAL PAYMENT, EXCEPT WHERE SIGNS ARE MODIFIED FROM THAT SHOWN.

2. THE SPEED LIMITS REQUIRED ON SIGNS R2-1 AND R2-4a WILL BE SHOWN ON INDIVIDUAL PLAN SHEETS.

| DATE | REVISION | BY |
|---|---|---|
| | | |

MISSISSIPPI DEPARTMENT OF TRANSPORTATION
ROADWAY DESIGN DIVISION
STANDARD PLAN

**STANDARD ROADSIDE SIGNS**

MDOT MISSISSIPPI DEPARTMENT OF TRANSPORTATION

WORKING NUMBER SN-3A

ISSUE DATE: AUGUST 01, 2017

SHEET NUMBER 6304

| STATE | PROJECT NO. |
|---|---|
| MISS. | |

| SIGN NUMBER | W1-1L<br>W1-1R | | W1-2L<br>W1-2R | | W1-3L<br>W1-3R | | W1-4L<br>W1-4R | | W1-6L<br>W1-6R | W1-7 | W3-1a | | W3-2a | | W3-3 | | W4-1L<br>W4-1R | W4-101L<br>W4-101R |
|---|---|---|---|---|---|---|---|---|---|---|---|---|---|---|---|---|---|---|
| ALUMINUM (6061-T6) SIGN BLANK THICKNESS | 0.125" | | 0.125" | | 0.125" | | 0.125" | | 0.100" | 0.100" | 0.125" | | 0.125" | | 0.125" | | 0.125" | 0.125" |
| LEGEND | R=2¼" R=3" | | R=2¼" R=3" | | R=2¼" R=3" | | 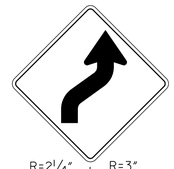 R=2¼" R=3" | | 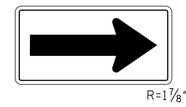 R=1⅞" | 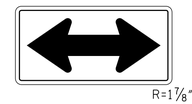 R=1⅞" | 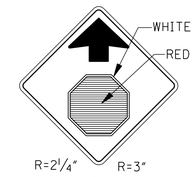  R=2¼" R=3" | | 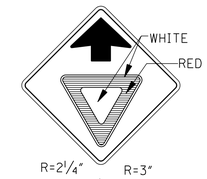  R=2¼" R=3" | | 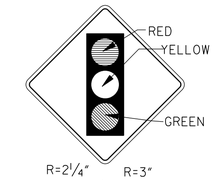  R=2¼" R=3" | | 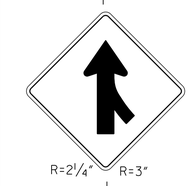 R=2¼" R=3" | |
| LETTER & NUMERAL SERIES | | | | | | | | | | | | | | | | | | |
| WIDTH OF BORDER INSIDE | ⅞" BLACK | 1¼" BLACK | ⅞" BLACK | 1¼" BLACK | ⅞" BLACK | 1¼" BLACK | ⅞" BLACK | 1¼" BLACK | ¾" BLACK | ¾" BLACK | ⅞" BLACK | 1¼" BLACK | ⅞" BLACK | 1¼" BLACK | ⅞" BLACK | 1¼" BLACK | ⅞" BLACK | 1¼" BLACK |
| WIDTH OF BORDER OUTSIDE | ⅝" YELLOW | ¾" YELLOW | ⅝" YELLOW | ¾" YELLOW | ⅝" YELLOW | ¾" YELLOW | ⅝" YELLOW | ¾" YELLOW | ½" YELLOW | ½" YELLOW | ⅝" YELLOW | ¾" YELLOW | ⅝" YELLOW | ¾" YELLOW | ⅝" YELLOW | ¾" YELLOW | ⅝" YELLOW | ¾" YELLOW |
| SIZE (WIDTH X HEIGHT) | 36" X 36" | 48" X 48" | 36" X 36" | 48" X 48" | 36" X 36" | 48" X 48" | 36" X 36" | 48" X 48" | 48" X 24" | 48" X 24" | 36" X 36" | 48" X 48" | 36" X 36" | 48" X 48" | 36" X 36" | 48" X 48" | 36" X 36" | 48" X 48" |
| COLORS COPY | BLACK | BLACK | BLACK | BLACK | BLACK | BLACK | BLACK | BLACK | BLACK | BLACK | BLACK | BLACK | BLACK | BLACK | BLACK | BLACK | BLACK | BLACK |
| COLORS BACKGROUND | YELLOW | YELLOW | YELLOW | YELLOW | YELLOW | YELLOW | YELLOW | YELLOW | YELLOW | YELLOW | YELLOW | YELLOW | YELLOW | YELLOW | YELLOW | YELLOW | YELLOW | YELLOW |
| REFLECTORIZATION | BACKGROUND | BACKGROUND | BACKGROUND | BACKGROUND | BACKGROUND | BACKGROUND | BACKGROUND | BACKGROUND | BACKGROUND | BACKGROUND | BACKGROUND & SYMBOL | BACKGROUND & SYMBOL | BACKGROUND & SYMBOL | BACKGROUND & SYMBOL | BACKGROUND & "LIGHTS" | BACKGROUND & "LIGHTS" | BACKGROUND | BACKGROUND |
| NUMBER OF POSTS FOR MOUNTING | 1 | 1 | 1 | 1 | 1 | 1 | 1 | 1 | 2 | 2 | 1 | 1 | 1 | 1 | 1 | 1 | 1 | 1 |
| NUMBER OF HOLES TO BE PUNCHED (⅜" DIA.) | 2 | 4 | 2 | 4 | 2 | 4 | 2 | 4 | 4 | 4 | 2 | 4 | 2 | 4 | 2 | 4 | 2 | 4 |
| PUNCHING DISTANCE FROM EACH VERT. EDGE | VERT. CENTER | 15" FROM VERT. CENTER | VERT. CENTER | 15" FROM VERT. CENTER | VERT. CENTER | 15" FROM VERT. CENTER | VERT. CENTER | 15" FROM VERT. CENTER | 9" | 9" | VERT. CENTER | 15" FROM VERT. CENTER | VERT. CENTER | 15" FROM VERT. CENTER | VERT. CENTER | 15" FROM VERT. CENTER | VERT. CENTER | 15" FROM VERT. CENTER |
| PUNCHING DISTANCE FROM TOP EDGE | 18" FROM HORIZ. CENTER | 15" FROM HORIZ. CENTER | 18" FROM HORIZ. CENTER | 15" FROM HORIZ. CENTER | 18" FROM HORIZ. CENTER | 15" FROM HORIZ. CENTER | 18" FROM HORIZ. CENTER | 15" FROM HORIZ. CENTER | 3"; 21" | 3"; 21" | 18" FROM HORIZ. CENTER | 15" FROM HORIZ. CENTER | 18" FROM HORIZ. CENTER | 15" FROM HORIZ. CENTER | 18" FROM HORIZ. CENTER | 15" FROM HORIZ. CENTER | 18" FROM HORIZ. CENTER | 15" FROM HORIZ. CENTER |
| SIGN NUMBER | W4-2 | | W6-1 | | W6-2 | | W6-3 | | W13-1 | W13-2 | W13-3 | | W10-1 | | | | | |
| ALUMINUM (6061-T6) SIGN BLANK THICKNESS | 0.125" | | 0.125" | | 0.125" | | 0.125" | | 0.080" | 0.125" | 0.125" | | 0.100" | | | | | |
| LEGEND | NOTE: SEE PLAN SHEETS FOR IDEOGRAM REQUIRED ON INDIVIDUAL SIGNS.<br> 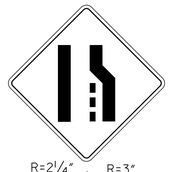 R=2¼" R=3" | | R=2¼" R=3" | | R=2¼" R=3" | | 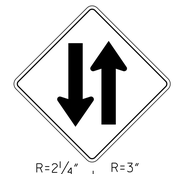 R=2¼" R=3" | | R=1½" | 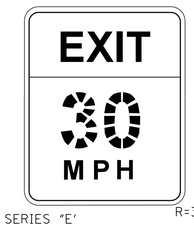  R=3" | 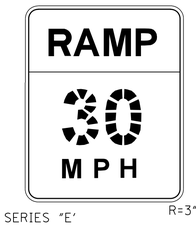  R=3" | | | | | |
| LETTER & NUMERAL SERIES | | | | | | | | | 10" SERIES "E"<br>4" SERIES "E" | 8" SERIES "E'<br>16" SERIES "E"<br>6" SERIES "E' (SEE NOTE) | 8" SERIES "E'<br>16" SERIES "E"<br>6" SERIES "E' (SEE NOTE) | | 8" SERIES "E" | | | | | |
| WIDTH OF BORDER INSIDE | ⅞" BLACK | 1¼" BLACK | ⅞" BLACK | 1¼" BLACK | ⅞" BLACK | 1¼" BLACK | ⅞" BLACK | 1¼" BLACK | ⅝" BLACK | 1¼" BLACK | 1¼" BLACK | | ¾" BLACK | | | | | |
| WIDTH OF BORDER OUTSIDE | ⅝" YELLOW | ¾" YELLOW | ⅝" YELLOW | ¾" YELLOW | ⅝" YELLOW | ¾" YELLOW | ⅝" YELLOW | ¾" YELLOW | ⅜" YELLOW | ¾" YELLOW | ¾" YELLOW | | ½" YELLOW | | | | | |
| SIZE (WIDTH X HEIGHT) | 36" X 36" | 48" X 48" | 36" X 36" | 48" X 48" | 36" X 36" | 48" X 48" | 36" X 36" | 48" X 48" | 24" X 24" | 48" X 60" | 48" X 60" | | 36" DIAMETER | | | | | |
| COLORS COPY | BLACK | BLACK | BLACK | BLACK | BLACK | BLACK | BLACK | BLACK | BLACK | BLACK | BLACK | | BLACK | | | | | |
| COLORS BACKGROUND | YELLOW | YELLOW | YELLOW | YELLOW | YELLOW | YELLOW | YELLOW | YELLOW | YELLOW | YELLOW | YELLOW | | YELLOW | | | | | |
| REFLECTORIZATION | BACKGROUND | BACKGROUND | BACKGROUND | BACKGROUND | BACKGROUND | BACKGROUND | BACKGROUND | BACKGROUND | BACKGROUND | BACKGROUND | BACKGROUND | | BACKGROUND | | | | | |
| NUMBER OF POSTS FOR MOUNTING | 1 | 1 | 1 | 1 | 1 | 1 | 1 | 1 | 1 | 1 | 1 | | 1 | | | | | |
| NUMBER OF HOLES TO BE PUNCHED (⅜" DIA.) | 2 | 4 | 2 | 4 | 2 | 4 | 2 | 4 | 2 | 6 | 6 | | 2 | | | | | |
| PUNCHING DISTANCE FROM EACH VERT. EDGE | VERT. CENTER | 15" FROM VERT. CENTER | VERT. CENTER | 15" FROM VERT. CENTER | VERT. CENTER | 15" FROM VERT. CENTER | VERT. CENTER | 15" FROM VERT. CENTER | 12" (VERT. CENTER) | 9" | 9" | | 15" | | | | | |
| PUNCHING DISTANCE FROM TOP EDGE | 18" FROM HORIZ. CENTER | 15" FROM HORIZ. CENTER | 18" FROM HORIZ. CENTER | 15" FROM HORIZ. CENTER | 18" FROM HORIZ. CENTER | 15" FROM HORIZ. CENTER | 18" FROM HORIZ. CENTER | 15" FROM HORIZ. CENTER | 3"; 21" | 4"; 30"; 56" | 4"; 30"; 56" | | 15" FROM HORIZ. CENTER | | | | | |

GENERAL NOTES:

1. THE QUANTITIES LISTED ON THE SUMMARY OF QUANTITIES SHEET FOR THE SIGNS SHOWN ON THIS SHEET WILL BE USED AS THE BASIS FOR FINAL PAYMENT, EXCEPT WHERE SIGNS ARE MODIFIED FROM THAT SHOWN.

2. SIGNS W13-2 AND W13-3- THE STROKE WIDTH OF THE LETTER AND NUMERALS SHALL BE WIDENED TO 20% OF THE LETTER OR NUMERAL HEIGHT.

3. THE SPEEDS REQUIRED ON SIGNS W13-1, W13-2 AND W13-3 WILL BE SHOWN ON INDIVIDUAL PLAN SHEETS.

| DATE | REVISION | BY |
|---|---|---|
| | | |

MISSISSIPPI DEPARTMENT OF TRANSPORTATION
ROADWAY DESIGN DIVISION
STANDARD PLAN

**STANDARD ROADSIDE SIGNS**

MDOT MISSISSIPPI DEPARTMENT OF TRANSPORTATION

WORKING NUMBER SN-3B

ISSUE DATE: AUGUST 01, 2017

SHEET NUMBER 6305

| STATE | PROJECT NO. |
|---|---|
| MISS. | |

## ROADSIDE SIGN IN RURAL AREA

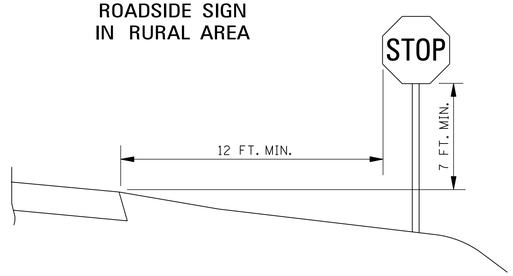


## ROADSIDE SIGN IN RURAL AREA

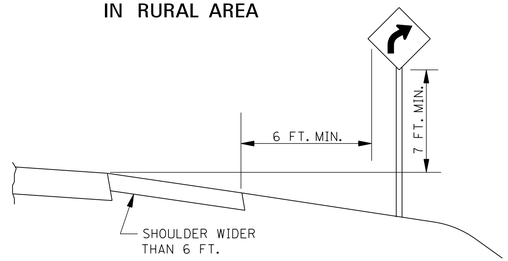


## ROADSIDE SIGN IN BUSINESS, COMMERCIAL, OR RESIDENTIAL AREA

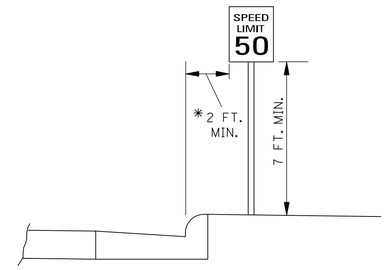


* THE 2 FT. MINIMUM OFFSET APPLIES ONLY TO STANDARD SIGNS MOUNTED ON U-POSTS. ALL STANDARD SIGNS MOUNTED ON PIPE WILL BE OFFSET A MINIMUM OF 4 FT.. RAMP DESTINATION SIGNS WILL BE OFFSET 4 FT. FROM THE SHOULDERS.

## WARNING SIGN WITH ADVISORY SPEED PLAQUE IN RURAL AREA

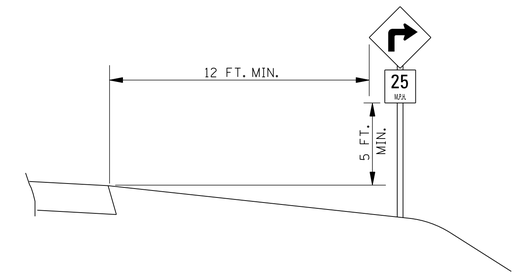


## ROADSIDE ASSEMBLY IN RURAL AREA

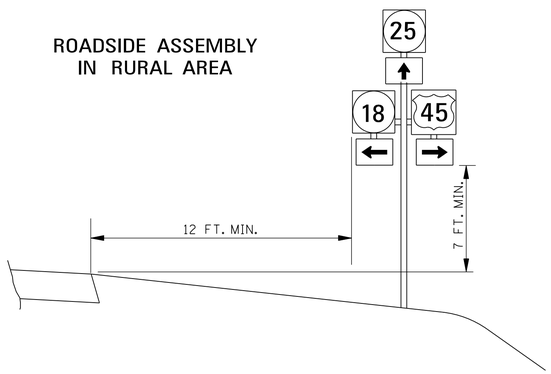


## INTERSTATE OR FREEWAY SIGN WITH SECONDARY SIGN

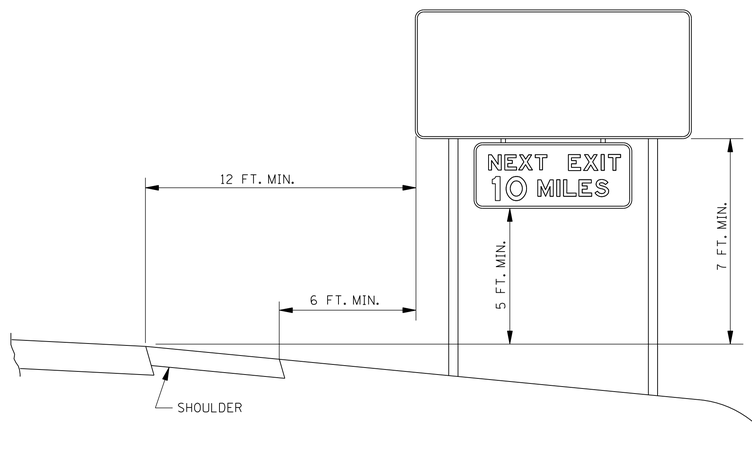


## OVERHEAD SIGN

## SIGN ON NOSE OF MEDIAN

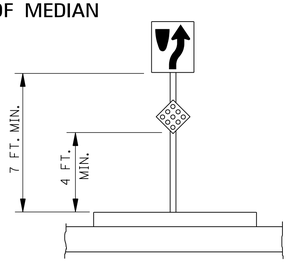


## SIGNS IN ISLANDS OR BEHIND CURB USING U-POSTS OR PIPE POSTS

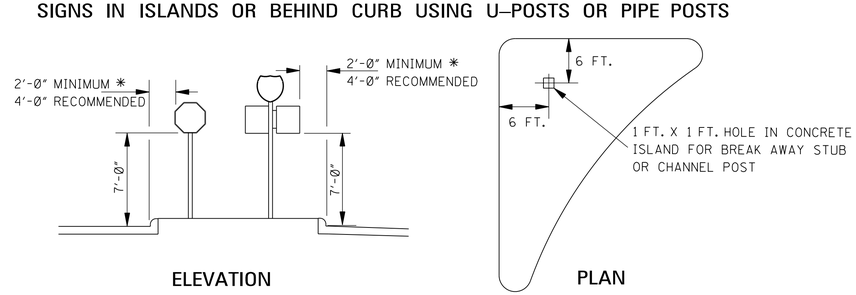


* THE 2 FT. MINIMUM OFFSET APPLIES ONLY TO STANDARD SIGNS MOUNTED ON U-POSTS. ALL STANDARD SIGNS MOUNTED ON PIPE WILL BE OFFSET A MINIMUM OF 4 FT.. RAMP DESTINATION SIGNS WILL BE OFFSET 4 FT. FROM THE SHOULDERS.

GENERAL NOTES:

1. SEE SECTION 2A-19 OF THE MUTCD FOR REDUCED LATERAL OFFSET DISTANCES THAT MAY BE USED IN AREAS WHERE LATERAL OFFSETS ARE LIMITED, AND IN BUSINESS, COMMERCIAL, OR RESIDENTIAL AREAS WHERE SIDEWALK WIDTH IS LIMITED OR WHERE EXISTING POLES ARE CLOSE TO THE CURB.
2. SIGNS SHALL BE LOCATED OUTSIDE THE CLEAR ZONE UNLESS PLACED ON A BREAKAWAY OR YIELDING SUPPORT.

| DATE | REVISION | BY |
|---|---|---|

MISSISSIPPI DEPARTMENT OF TRANSPORTATION
ROADWAY DESIGN DIVISION
STANDARD PLAN

# STANDARD ROADSIDE SIGN ASSEMBLY AND INSTALLATION

MDOT MISSISSIPPI DEPARTMENT OF TRANSPORTATION

WORKING NUMBER SN-4

ISSUE DATE: AUGUST 01, 2017

SHEET NUMBER 6306

| STATE | PROJECT NO. |
|---|---|
| MISS. | |

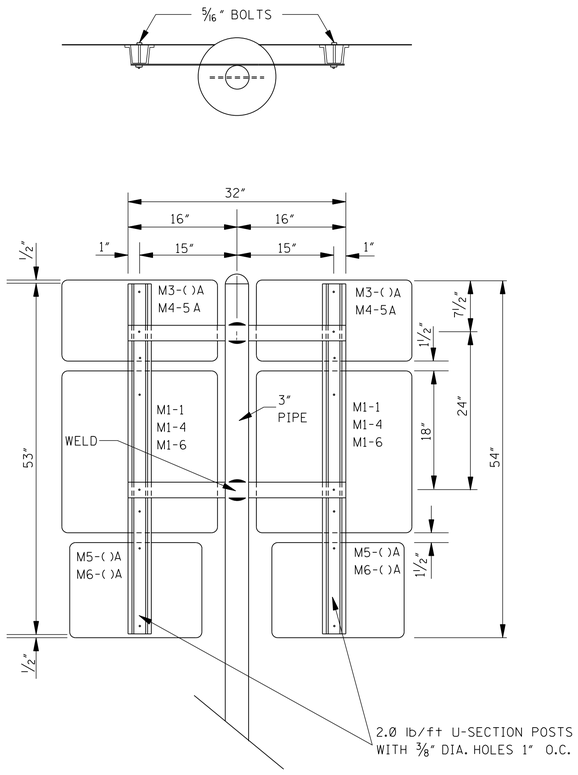


TYPICAL ROUTE ASSEMBLY

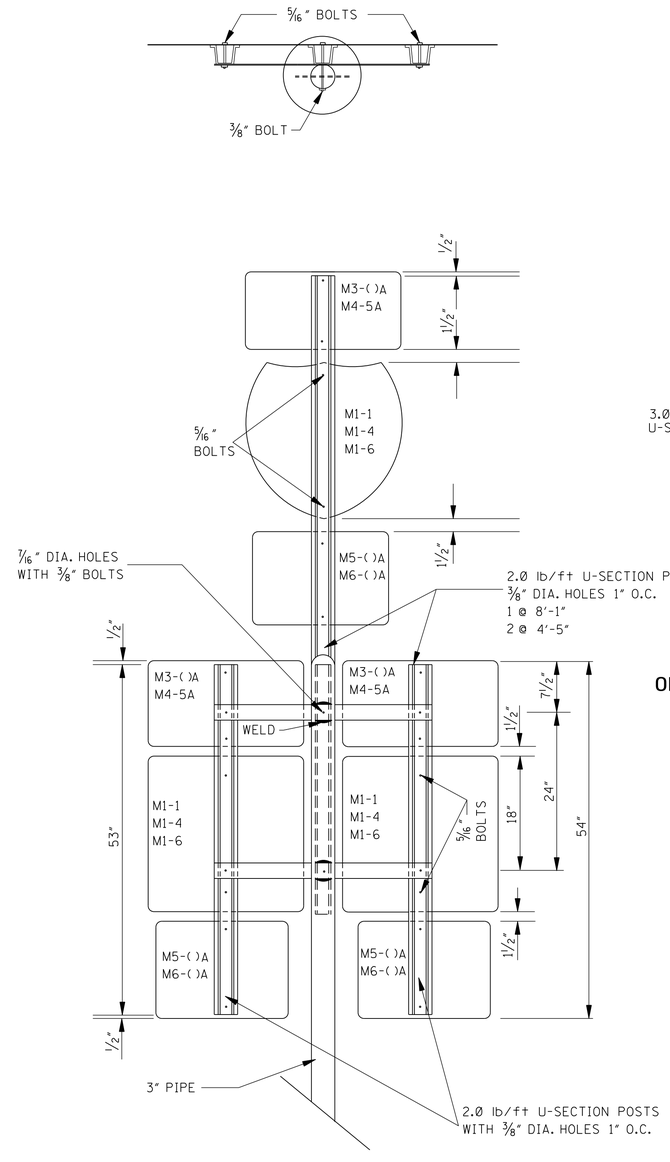


TYPICAL STACKED ROUTE ASSEMBLY

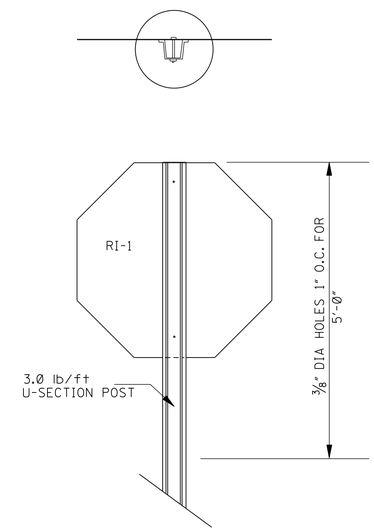


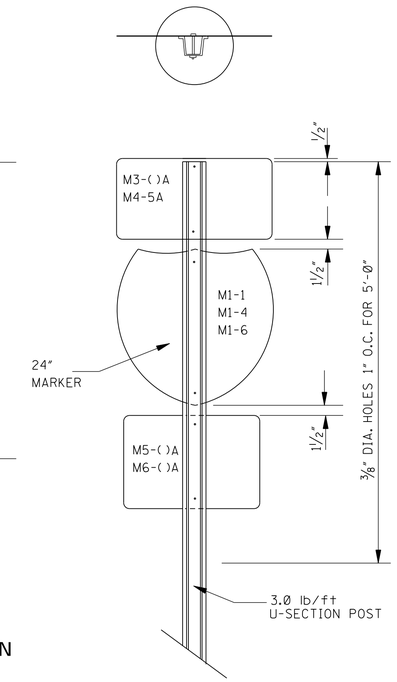


TYPICAL ASSEMBLY OF
"FLAT TOPPED" REGULATORY
OR WARNING SIGN MOUNTED ON
A SINGLE U-SECTION POST

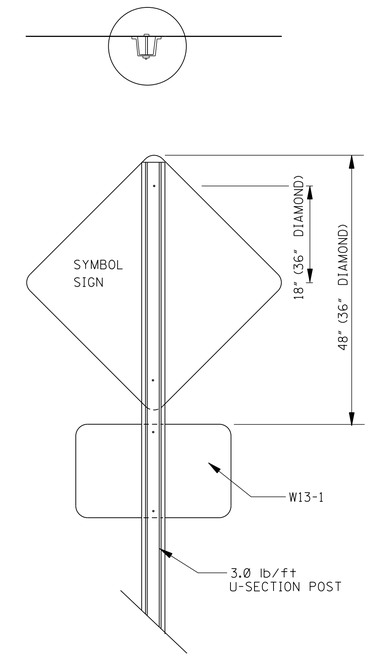


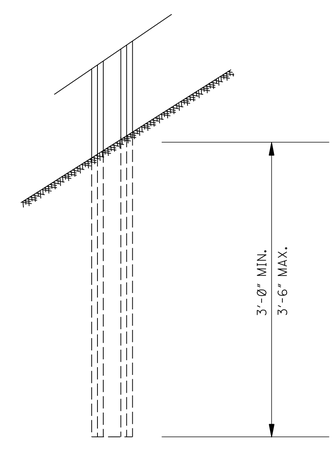


FOOTING DETAIL FOR
U-SECTION POSTS

GENERAL NOTES:

1. UNLESS OTHERWISE SPECIFIED, HORIZONTAL BRACES ARE 7/16" X 2 1/2" X VARIABLE LENGTH FLAT STEEL BARS. BARS ARE WELDED TO PIPE AS SHOWN. WHEN FABRICATION IS COMPLETE, POST SHALL BE GALVANIZED AS PER SECTION 630 OF THE STANDARD SPECIFICATION.
2. HOLES IN FLAT BARS ARE 3/8" DIAMETER.
3. SIGNS ARE FASTENED TO FLAT BARS AND U-SECTION POST WITH 5/16" BOLTS, WITH FLAT WASHER AND LOCK-NUTS.
4. GROUND PLATE NOT REQUIRED ON U-SECTION POST.
5. SEE WK. NO. SN-4B FOR DETAIL OF 3" PIPE FOOTING DETAIL.

| DATE | REVISION | BY |
|---|---|---|
| | | |

MISSISSIPPI DEPARTMENT OF TRANSPORTATION
ROADWAY DESIGN DIVISION
STANDARD PLAN

**STANDARD ROADSIDE SIGN ASSEMBLY AND INSTALLATION**

MDOT

WORKING NUMBER
SN-4A

SHEET NUMBER
6307

ISSUE DATE: AUGUST 01, 2017

| STATE | PROJECT NO. |
|---|---|
| MISS. | |

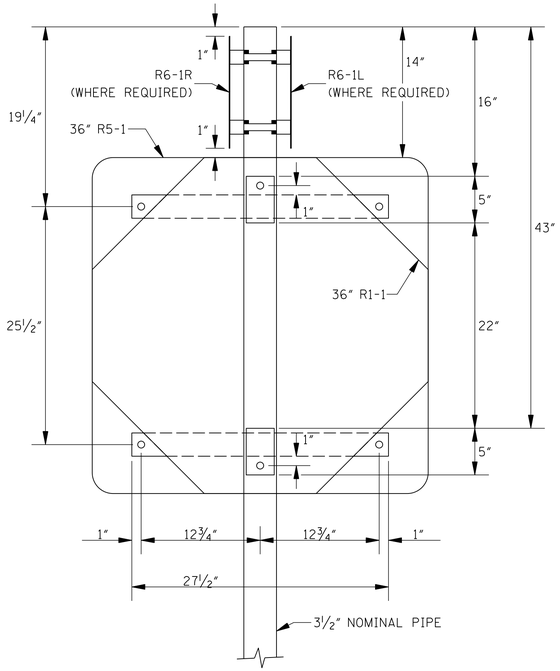


TYPICAL BACK–TO–BACK SIGN MOUNT
SHOWING R5–1 WITH R1–1

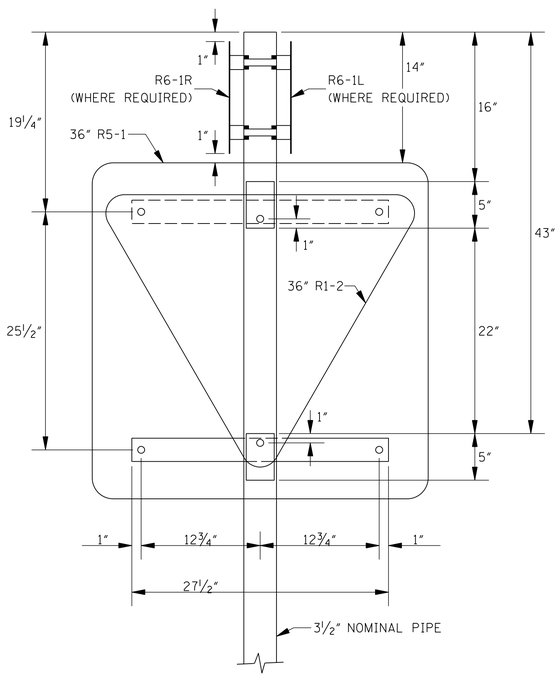


TYPICAL BACK–TO–BACK SIGN MOUNT
SHOWING R5–1 WITH R1–2

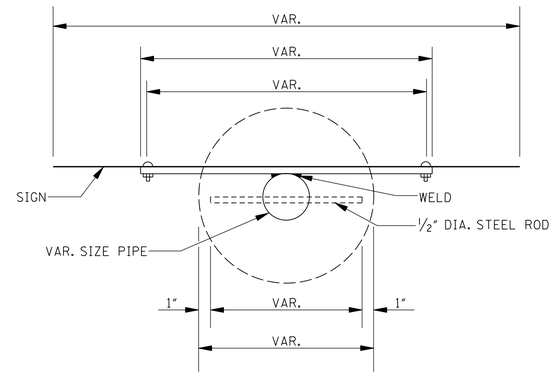


TYPICAL PLAN VIEW

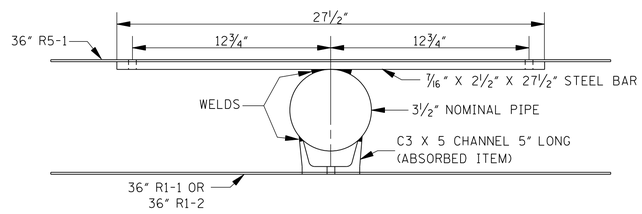


PLAN VIEW OF DOUBLE MOUNTING OF SIGNS

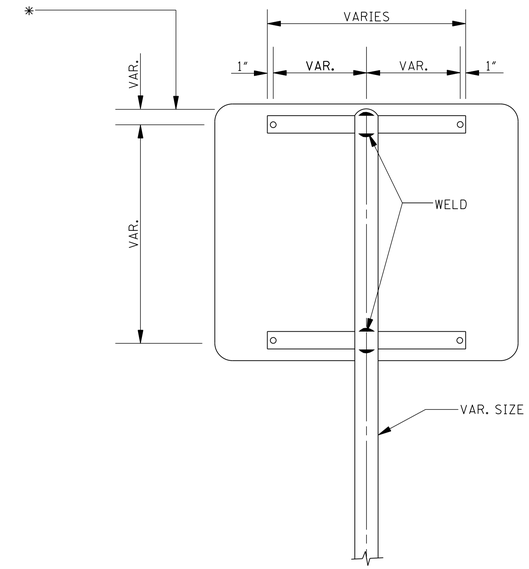


TYPICAL ASSEMBLY ON PIPE

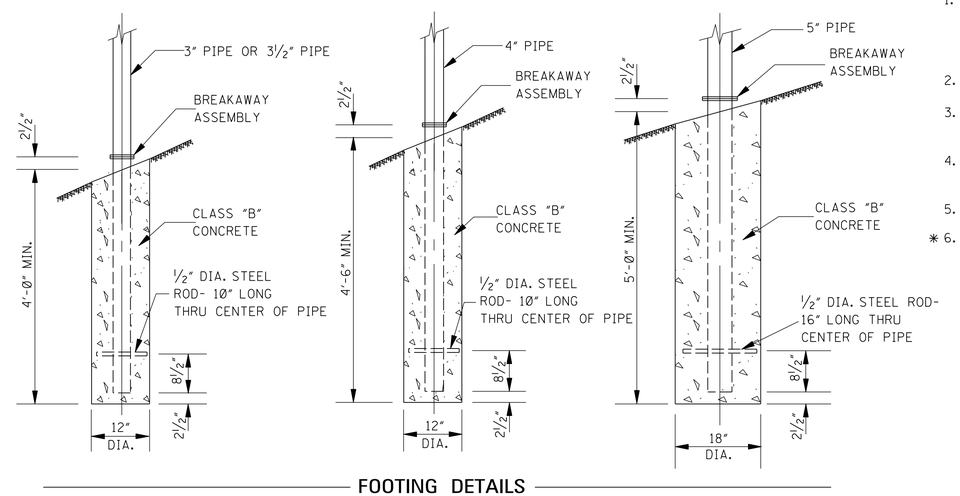


FOOTING DETAILS

GENERAL NOTES:

1. UNLESS OTHERWISE SPECIFIED, HORIZONTAL BRACES ARE 7/16" X 2½" X VARIABLE LENGTH FLAT STEEL BARS. BARS ARE WELDED TO PIPE AS SHOWN. WHEN FABRICATION IS COMPLETE, POSTS SHALL BE GALVANIZED AS PER SECTION 630 OF THE STANDARD SPECIFICATION.
2. HOLES IN FLAT BARS ARE ⅜" DIAMETER.
3. SIGNS ARE FASTENED TO THE FLAT BARS AND U-SECTION POSTS WITH M8 BOLTS WITH FLAT WASHERS AND LOCK NUTS.
4. WHERE REQUIRED, SIGNS R6-1L AND R6-1R SHALL BE MOUNTED ON PIPES WITH CLAMPS OR BUCKLE BRACKETS (NOT A PAY ITEM).
5. ALL WELDS SHALL BE 3/16" FILLET.

* 6. TOP OF POST

| DATE | REVISION | BY |
|---|---|---|
| | | |

MISSISSIPPI DEPARTMENT OF TRANSPORTATION
ROADWAY DESIGN DIVISION
STANDARD PLAN

**STANDARD ROADSIDE SIGN ASSEMBLY AND INSTALLATION**

MDOT MISSISSIPPI DEPARTMENT OF TRANSPORTATION

WORKING NUMBER
SN-4B

ISSUE DATE: AUGUST 01, 2017

SHEET NUMBER
6308

| STATE | PROJECT NO. |
|---|---|
| MISS. | |

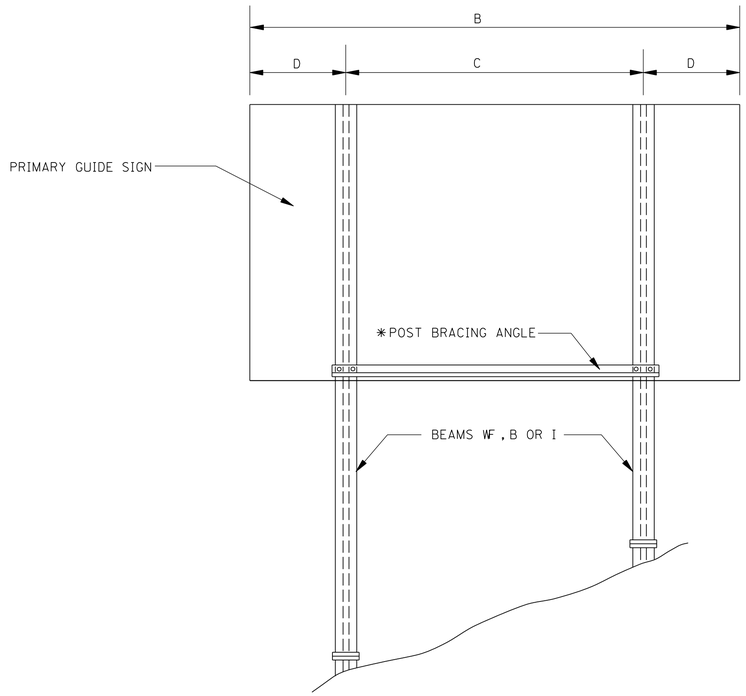


TYPICAL 2–POST INSTALLATION
WITHOUT EXIT SIGN

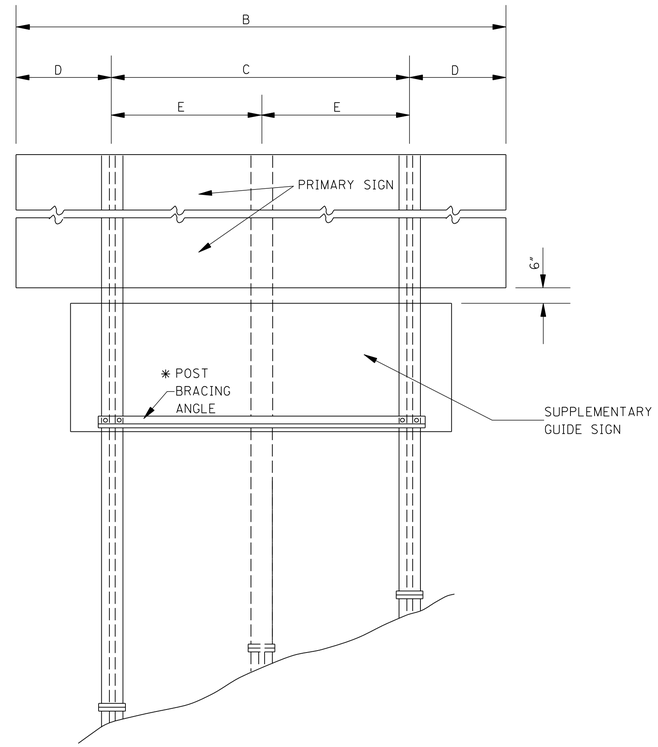


TYPICAL 2 OR 3 POST INSTALLATION
WITH SUPPLEMENTARY GUIDE SIGN
AND POST BRACING ANGLE LOCATION

✱ NOTE: PLACE POST BRACING ANGLE AT BOTTOM OF PRIMARY OR SUPPLEMENTARY SIGN WHICHEVER IS LOWER.
(SEE "END ELEVATION OF POST AND FOOTING" ON SN-6A.)

SIGN POST SPACING TABLE

| 2 POST | | | 2 POST (CONT'D) | | | 3 POST | | | |
|---|---|---|---|---|---|---|---|---|---|
| "B" | "C" | "D" | "B" | "C" | "D" | "B" | "C" | "D" | "E" |
| 4'-0" | 2'-0" | 1'-0" | 14'-6" | 8'-9" | 2'-10½" | 20'-0" | 14'-0" | 3'-0" | 7'-0" |
| 4'-6" | 2'-6" | 1'-0" | 15'-0" | 9'-0" | 3'-0" | 20'-6" | 14'-3" | 3'-1½" | 7'-1½" |
| 5'-0" | 3'-0" | 1'-0" | 15'-6" | 9'-3" | 3'-1½" | 21'-0" | 14'-9" | 3'-1½" | 7'-4½" |
| 5'-6" | 3'-6" | 1'-0" | 16'-0" | 9'-6" | 3'-3" | 21'-6" | 15'-0" | 3'-3" | 7'-6" |
| 6'-0" | 4'-0" | 1'-0" | 16'-6" | 10'-0" | 3'-3" | 22'-0" | 15'-6" | 3'-3" | 7'-9" |
| 6'-6" | 4'-6" | 1'-0" | 17'-0" | 10'-3" | 3'-4½" | 22'-6" | 15'-9" | 3'-4½" | 7'-10½" |
| 7'-0" | 5'-0" | 1'-0" | 17'-6" | 10'-6" | 3'-6" | 23'-0" | 16'-0" | 3'-6" | 8'-0" |
| 7'-6" | 5'-6" | 1'-0" | 18'-0" | 10'-9" | 3'-7½" | 23'-6" | 16'-6" | 3'-6" | 8'-3" |
| 8'-0" | 6'-0" | 1'-0" | 18'-6" | 11'-0" | 3'-9" | 24'-0" | 16'-9" | 3'-7½" | 8'-4½" |
| 8'-6" | 6'-6" | 1'-0" | 19'-0" | 11'-6" | 3'-9" | 24'-6" | 17'-3" | 3'-7½" | 8'- 7½" |
| 9'-0" | 7'-0" | 1'-0" | 19'-6" | 11'-9" | 3'-10½" | 25'-0" | 17'-6" | 3'-9" | 8'-9" |
| 9'-6" | 7'-0" | 1'-3" | 20'-0" | 12'-0" | 4'-0" | 25'-6" | 17'-9" | 3'-10½" | 8'-10½" |
| 10'-0" | 7'-0" | 1'-6" | 20'-6" | 12'-3" | 4'-1½" | 26'-0" | 18'-3" | 3'-10½" | 9'-1½" |
| 10'-6" | 7'-0" | 1'-9" | 21'-0" | 12'-6" | 4'-3" | 26'-6" | 18'-6" | 4'-0" | 9'-3" |
| 11'-0" | 7'-0" | 2'-0" | 21'-6" | 13'-0" | 4'-3" | 27'-0" | 19'-0" | 4'-0" | 9'-6" |
| 11'-6" | 7'-0" | 2'-3" | 22'-0" | 13'-3" | 4'-4½" | 27'-6" | 19'-3" | 4'-1½" | 9'-7½" |
| 12'-0" | 7'-3" | 2'-4½" | 22'-6" | 13'-6" | 4'-6" | 28'-0" | 19'-6" | 4'-3" | 9'-9" |
| 12'-6" | 7'-6" | 2'-6" | 23'-0" | 13'-9" | 4'-7½" | 28'-6" | 20'-0" | 4'-3" | 10'-0" |
| 13'-0" | 7'-9" | 2'-7½" | 23'-6" | 14'-0" | 4'-9" | 29'-0" | 20'-3" | 4'-4½" | 10'-1½" |
| 13'-6" | 8'-0" | 2'-9" | 24'-0" | 14'-6" | 4'-9" | 29'-6" | 20'-6" | 4'-6" | 10'-3" |
| 14'-0" | 8'-6" | 2'-9" | | | | 30'-0" | 21'-0" | 4'-6" | 10'-6" |

GENERAL NOTES FOR WORKING SHEETS SN-6, SN-6A AND SN-6B:

1. FOOTING
   ALL FOOTINGS SHALL BE CLASS "B" CONCRETE. POST STUBS SHALL BE SET IN CONCRETE FOOTING AT REQUIRED GRADE AND ALIGNMENT WITH CARE SO THAT MINIMUM SHIMMING WILL BE REQUIRED.

2. BASE CONNECTION PROCEDURE
   ASSEMBLE POST TO STUB WITH BOLTS AND WITH A FLAT WASHER ON EACH BOLT BETWEEN PLATES. SHIM AS REQUIRED TO PLUMB POST. TIGHTEN ALL BOLTS THE MAXIMUM POSSIBLE WITH A 12" TO 15" WRENCH TO BED WASHERS AND SHIMS AND TO CLEAN BOLT THREADS. THEN LOOSEN EACH BOLT IN TURN AND RETIGHTEN IN A SYSTEMATIC ORDER TO THE PRESCRIBED TORQUE AS SHOWN BY TABLE. BURR THREADS AT JUNCTION WITH NUT USING A CENTER PUNCH. HIGH STRENGTH BOLTS IN BASE CONNECTIONS SHALL BE TIGHTENED TO TORQUE AS SHOWN BY TABLE ON SN-6A. DO NOT OVER TIGHTEN!

3. POST LENGTH
   ALL POST LENGTHS SHALL BE VERIFIED AND APPROVED BY THE ENGINEER PRIOR TO FABRICATION. WHERE FIELD CONDITIONS REQUIRE THE POST LENGTH TO VARY MORE THAN 12", IT MAY BE NECESSARY TO CHANGE THE SIZE OR NUMBER OF POSTS. SUCH DETERMINATION WILL BE MADE BY THE STATE TRAFFIC ENGINEER. ANY CHANGE OF SIZE OR NUMBER OF POSTS SHALL NOT BE JUSTIFICATION FOR ANY CONTRACT PRICE ADJUSTMENTS.

4. FABRICATOR NOTE
   IMPORTANT- ALL FRICTION FUSE BOLTS SHALL BE TIGHTENED IN SHOP BY A METHOD APPROVED BY THE BRIDGE DESIGN ENGINEER. TIGHTENING SHALL BE TO SUCH A DEGREE AS TO PROVIDE THE MINIMUM TENSION IN EACH BOLT WHEN ALL BOLTS ARE TIGHT, AS SHOWN BY TABLE SN-6A.

5. ALL HOLES IN FUSE PLATES AND HINGE PLATES SHALL BE DRILLED.

6. ALL PLATE CUTS SHOULD BE SAW CUTS. FLAME CUTTING WILL BE PERMITTED PROVIDED ALL EDGES ARE GROUND. METAL PROJECTING BEYOND THE PLANE OF THE PLATE FACE WILL NOT BE ACCEPTABLE.

7. WELDING FOR STEEL SIGN SUPPORTS
   WELDING SHALL BE PERFORMED IN SHOP BY ELECTRIC ARC PROCESS.

8. MATERIAL SPECIFICATIONS
   THE MATERIALS USED IN THE CONSTRUCTION OF THE GROUND MOUNTED SIGN SUPPORT STRUCTURES, AS LISTED BELOW, SHALL CONFORM WITH THE REQUIREMENTS OF THE DESIGNATED ASTM SPECIFICATION. ALL OTHER MATERIALS, FABRICATION AND ERECTION SHALL BE IN ACCORDANCE WITH THE REQUIREMENTS OF THE SPECIFICATIONS, EXCEPT AS OTHERWISE NOTED ON THE PLANS.

| DESCRIPTION | MATERIALS PER ASTM DESIGNATION | GALVANIZE (1) PER ASTM DESIGNATION |
|---|---|---|
| POSTS OF STEEL PIPE | A 53 (GRADE "B")(2) | A 53 |
| BASE CONNECTION PLATES FOR PIPES | A 36 | A 123 |
| POSTS OF STEEL WF, B, AND I BEAMS INCLUDING BASE CONNECTION, FUSE AND HINGE PLATES | A 588 OR A 572 GRADE 50 | A 123 |
| POST BRACING ANGLES AND FLAT BARS USED IN FABRICATION AND ERECTION OF SIGN SUPPORTS | A 36 | A 123 |
| HIGH STRENGTH BOLTS, NUTS AND WASHERS | A 325 | A 153 |
| BOLTS OTHER THAN HIGH STRENGTH (3) | A 307 (GRADE "A") | A 153 |

(1) ALL STEEL SHALL BE GALVANIZED AFTER FABRICATION EXCEPT AS NOTED ON THE PLANS.
(2) PIPES MAY BE WELDED OR SEAMLESS.
(3) BOLTS, WASHERS, AND NUTS USED FOR FASTENING ALUMINUM SIGN SHEETS AND PANELS SHALL BE ALUMINUM AS PER FOLLOWING TABLE.

| DESCRIPTION | ASTM DESIGNATION | ALLOY |
|---|---|---|
| BOLTS AND WASHERS | B 209 | 2024-T4 |
| PANEL BOLT NUTS | B 211 | 6061-T6 |
| STOP NUTS | B 211 | 2017-T4 |

| DATE | REVISION | BY |
|---|---|---|
| | | |

MISSISSIPPI DEPARTMENT OF TRANSPORTATION
ROADWAY DESIGN DIVISION
STANDARD PLAN

**BREAKAWAY SIGN SUPPORTS**

MDOT MISSISSIPPI DEPARTMENT OF TRANSPORTATION

WORKING NUMBER SN-6

ISSUE DATE: AUGUST 01, 2017

SHEET NUMBER 6310

| STATE | PROJECT NO. |
|---|---|
| MISS. | |

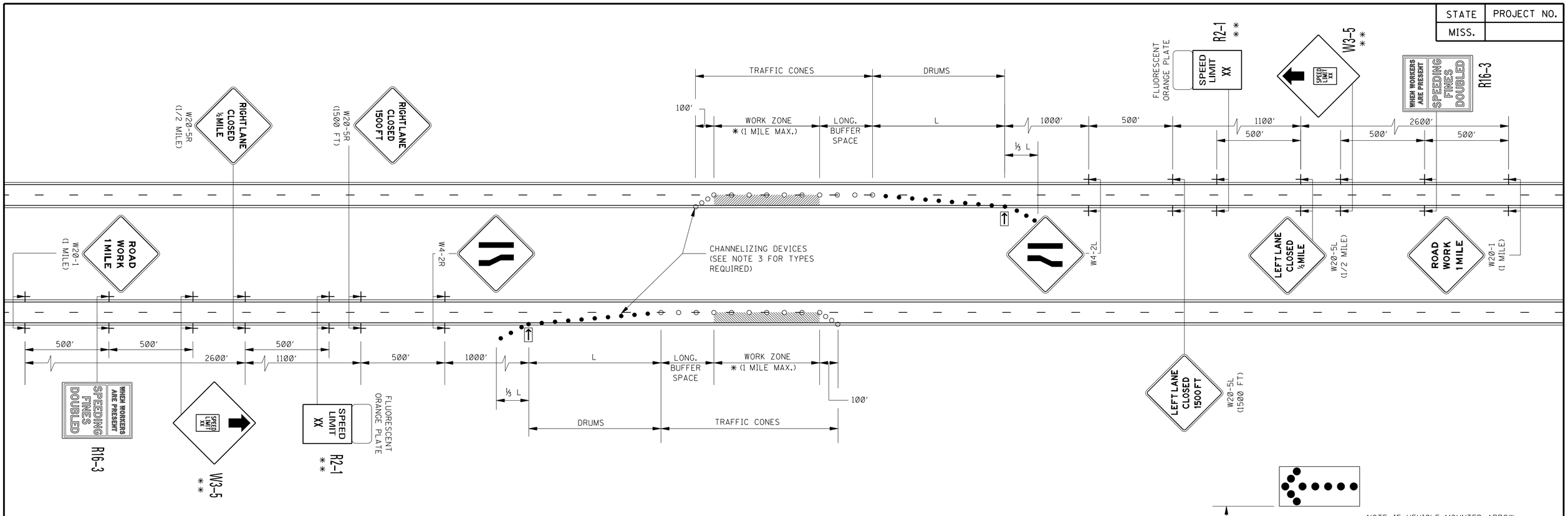


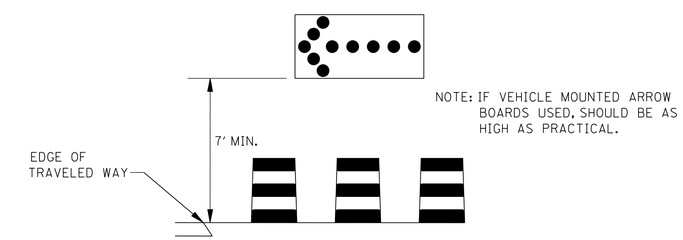


GENERAL NOTES:

1. THE LOCATION OF CHANNELIZING DEVICES AND THE WORK AREA LAYOUT SHALL BE BASED ON THE CRITERIA IN THE FOLLOWING TABLE:

| POSTED SPEED AND/OR DESIGN SPEED | MAXIMUM CHANNELIZING DEVICE SPACING (ft) | | LONGITUDINAL BUFFER SPACE (ft) †† | TAPER RATES † |
|---|---|---|---|---|
| mph | TAPER | ALONG LANE LINE & WORK ZONE | | |
| ≤40 | 40 | 80 | 305 | 27:1 |
| 45 | 45 | 90 | 360 | 45:1 |
| 50 | 50 | 100 | 425 | 50:1 |
| 55 | 55 | 110 | 495 | 55:1 |
| 60 | 60 | 120 | 570 | 60:1 |
| 65 | 65 | 130 | 645 | 65:1 |
| 70 | 70 | 140 | 730 | 70:1 |

† NOTE: TAPER RATES ARE DETERMINED USING THE FOLLOWING EQUATIONS:
$L = WS$ FOR SPEEDS OF 45 mph OR GREATER
$L = WS^2/60$ FOR SPEEDS OF 40 mph OR LESS
WHERE: L = MINIMUM LENGTH OF TAPER IN FEET
W = WIDTH OF OFFSET (USUALLY LANE WIDTH) IN FEET
S = DESIGN SPEED OR 85TH PERCENTILE SPEED IN MILES PER HOUR

†† NOTE: BUFFER SPACE MAY BE ADJUSTED AS NEEDED ACCORDING TO ROADWAY GEOMETRY TO MEET SIGHT DISTANCE REQUIREMENTS, AS DIRECTED BY THE ENGINEER.

2. FLASHING ARROW PANEL SHOULD BE AS LEVEL AS POSSIBLE AS APPROVED BY THE ENGINEER. FLASHING ARROW PANEL SHOULD BE LOCATED AT THE BEGINNING OF THE TAPER OR, IF THE SHOULDER IS TOO NARROW, BEHIND THE CHANNELIZING DEVICES IN THE CLOSED LANE.

3. CHANNELIZING DEVICE TYPES FOR:
   A. APPROACH TAPER- RETROREFLECTIVE PLASTIC DRUMS
   B. ALONG LANE LINE AND WORK ZONE- TRAFFIC CONES (28″ HEIGHT MINIMUM)
   C. EXIT TAPER- TRAFFIC CONES (28″ HEIGHT MINIMUM)

4. WHEN WORK ZONE IS NO LONGER NEEDED, ALL SIGNS SHALL BE COVERED OR REMOVED AND THE DRUMS SHALL BE MOVED TO THE SHOULDER EDGE AT THE END OF THE WORK DAY.

5. FOR MOVING OPERATIONS (PAVING) THE CONTRACTOR SHALL HAVE TWO (2) SETS OF ADVANCE WARNING SIGNS, PLASTIC DRUMS, AND ARROW BOARD. WHEN THE CONSTRUCTION ZONE IS MOVED AHEAD, ALL SIGNS, PLASTIC DRUMS AND ARROW BOARD SHALL BE IN PLACE ON THE SECOND ZONE BEFORE REMOVING ANY SIGNS, PLASTIC DRUMS OR ARROW BOARD ON THE FIRST ZONE.

6. DIAMOND SHAPED TRAFFIC CONTROL SIGNS SHOULD BE A MINIMUM OF 48″ X 48″. AND SHALL BE BLACK COPY ON FLUORESCENT ORANGE SHEETING.

7. ALL TRAFFIC CONTROL ITEMS SHOWN ON THIS SHEET WILL NOT BE MEASURED FOR SEPARATE PAYMENT. THIS WORK SHALL BE INCLUDED IN THE PRICE BID FOR MAINTENANCE OF TRAFFIC.

LEGEND

✱ OR AS SHOWN ELSEWHERE ON THE PLANS.

✱✱ THE SPEED ON R2-1 AND W3-5 SIGNS SHALL BE 10 MPH LESS THAN THE POSTED SPEED LIMIT UNLESS OTHERWISE DIRECTED BY COMMISSION ORDER.

→ FLASHING ARROW PANEL (TYPE "C")

● RETROREFLECTIVE FREE-STANDING PLASTIC DRUMS

○ TRAFFIC CONES (28″ HEIGHT MINIMUM)

| DATE | REVISION | BY |
|---|---|---|
| | | |

MISSISSIPPI DEPARTMENT OF TRANSPORTATION
ROADWAY DESIGN DIVISION
STANDARD PLAN

# TRAFFIC CONTROL PLAN FOR POSTED SPEED LIMIT LESS THAN 65 MPH

## (4-LANE: MEDIAN LANE OR OUTSIDE LANE CLOSURE) (WORK DAY ONLY)

ISSUE DATE: AUGUST 01, 2017

WORKING NUMBER TCP-2

SHEET NUMBER 6352

| STATE | PROJECT NO. |
|---|---|
| MISS. | |

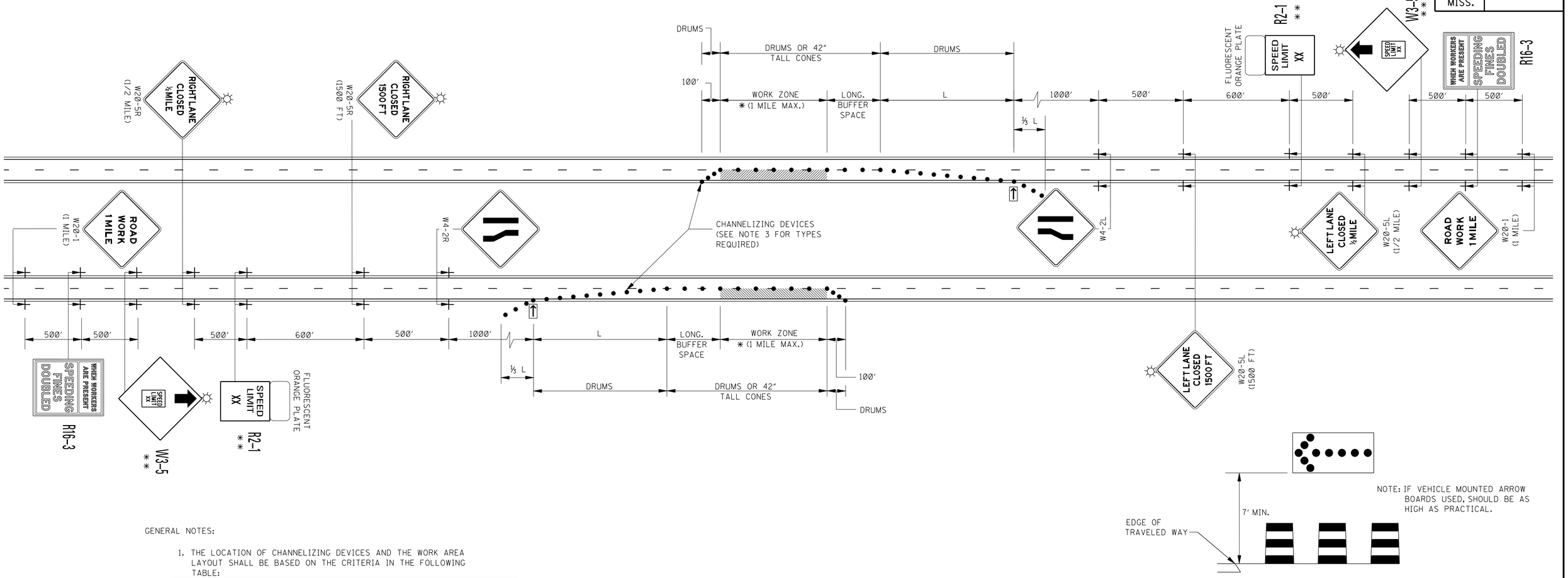





GENERAL NOTES:

1. THE LOCATION OF CHANNELIZING DEVICES AND THE WORK AREA LAYOUT SHALL BE BASED ON THE CRITERIA IN THE FOLLOWING TABLE:

| POSTED SPEED AND/OR DESIGN SPEED | MAXIMUM CHANNELIZING DEVICE SPACING (ft) | | †† LONGITUDINAL BUFFER SPACE (ft) | TAPER † RATES |
|---|---|---|---|---|
| mph | TAPER | ALONG BUFFER SPACE & WORK ZONE | | |
| ≤40 | 40 | 80 | 305 | 27:1 |
| 45 | 45 | 90 | 360 | 45:1 |
| 50 | 50 | 100 | 425 | 50:1 |
| 55 | 55 | 110 | 495 | 55:1 |
| 60 | 60 | 120 | 570 | 60:1 |
| 65 | 65 | 130 | 645 | 65:1 |
| 70 | 70 | 140 | 730 | 70:1 |

† NOTE: TAPER RATES ARE DETERMINED USING THE FOLLOWING EQUATIONS:
$L = WS$ FOR SPEEDS OF 45 mph OR GREATER
$L = WS^2/60$ FOR SPEEDS OF 40 mph OR LESS
WHERE: L = MINIMUM LENGTH OF TAPER IN FEET
W = WIDTH OF OFFSET (USUALLY LANE WIDTH) IN FEET
S = DESIGN SPEED OR 85TH PERCENTILE SPEED IN MILES PER HOUR

†† NOTE: BUFFER SPACE MAY BE ADJUSTED AS NEEDED ACCORDING TO ROADWAY GEOMETRY TO MEET SIGHT DISTANCE REQUIREMENTS, AS DIRECTED BY THE ENGINEER.

2. FLASHING ARROW PANEL SHOULD BE AS LEVEL AS POSSIBLE AS APPROVED BY THE ENGINEER. FLASHING ARROW PANEL SHOULD BE LOCATED AT THE BEGINNING OF THE TAPER OR, IF THE SHOULDER IS TOO NARROW, BEHIND THE CHANNELIZING DEVICES IN THE CLOSED LANE.

3. CHANNELIZING DEVICES:
   A. ALL CHANNELIZING DEVICES IN TAPERS SHALL BE RETROREFLECTIVE FREE STANDING PLASTIC DRUMS.
   B. CHANNELIZING DEVICES IN TANGENTS MAY BE EITHER RETROREFLECTIVE FREE STANDING PLASTIC DRUMS OR 42" TALL CONES.
   C. ALL CHANNELIZING DEVICES SHALL BE RETROREFLECTIVE.
   D. RETROREFLECTORIZATION SHALL BE IN ACCORDANCE WITH THE LATEST EDITION OF THE M.U.T.C.D.

4. FOR MOVING OPERATIONS (PAVING) THE CONTRACTOR SHALL HAVE TWO (2) SETS OF ADVANCE WARNING SIGNS, PLASTIC DRUMS, AND ARROW BOARD. WHEN THE CONSTRUCTION ZONE IS MOVED AHEAD, ALL SIGNS, PLASTIC DRUMS AND ARROW BOARD SHALL BE IN PLACE ON THE SECOND ZONE BEFORE REMOVING ANY SIGNS, PLASTIC DRUMS OR ARROW BOARD ON THE FIRST ZONE.

5. DIAMOND SHAPED TRAFFIC CONTROL SIGNS SHOULD BE A MINIMUM OF 48" X 48". AND SHALL BE BLACK COPY ON FLUORESCENT ORANGE SHEETING.

6. ALL TRAFFIC CONTROL ITEMS SHOWN ON THIS SHEET WILL NOT BE MEASURED FOR SEPARATE PAYMENT. THIS WORK SHALL BE INCLUDED IN THE PRICE BID FOR MAINTENANCE OF TRAFFIC.

LEGEND

* OR AS SHOWN ELSEWHERE ON THE PLANS.

** THE SPEED ON R2-1 AND W3-5 SIGNS SHALL BE 10 MPH LESS THAN THE POSTED SPEED LIMIT UNLESS OTHERWISE DIRECTED BY COMMISSION ORDER.

FLASHING ARROW PANEL (TYPE "C")

● RETROREFLECTIVE FREE-STANDING PLASTIC DRUMS

TYPE "B" WARNING LIGHTS

| DATE | REVISION | BY |
|---|---|---|
| | | |

MISSISSIPPI DEPARTMENT OF TRANSPORTATION
ROADWAY DESIGN DIVISION
STANDARD PLAN

# TRAFFIC CONTROL PLAN FOR POSTED SPEED LIMIT LESS THAN 65 MPH

## (4-LANE: MEDIAN LANE OR OUTSIDE LANE CLOSURE) (EXTENDED PERIOD)

ISSUE DATE: AUGUST 01, 2017

WORKING NUMBER TCP-3

SHEET NUMBER 6353

| STATE | PROJECT NO. |
|---|---|
| MISS. | |

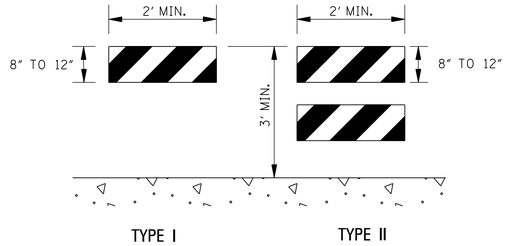


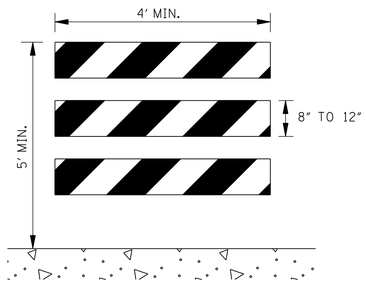


## STANDARD BARRICADES

1. THE MARKING FOR BARRICADE RAILS SHALL BE ORANGE AND WHITE (SLOPING DOWNWARD AT AN ANGLE OF 45° IN THE DIRECTION TRAFFIC IS TO PASS).
2. RAIL STRIPE SHOULD BE 6 INCHES, EXCEPT THAT 4-INCH WIDE STRIPES MAY BE USED IF RAIL LENGTHS ARE LESS THAN 36 INCHES.
3. DO NOT PLACE SANDBAGS OR OTHER DEVICES TO PROVIDE MASS ON THE BOTTOM RAIL THAT WILL BLOCK VIEW OR RAIL FACE.
4. FOR ADDITIONAL INFORMATION OR DETAILS, SEE MUTCD, LATEST EDITION.
5. BARRICADES ARE CLASSIFIED BY FHWA AS CATEGORY II WORK ZONE DEVICES WHICH REQUIRE CRASHWORTHINESS ACCEPTANCE LETTERS. TO DATE, 2-IN. THICK TIMBER RAILS HAVE NOT BEEN SUCCESSFULLY CRASH TESTED. A LIST OF CRASHWORTHY BARRICADES AND OTHER CATAGORY II DEVICES CAN BE FOUND ON FHWA'S WEBSITE:
http://safety.fhwa.dot.gov/roadway_dept/policy.guide/road_hardware/cat2.cfm

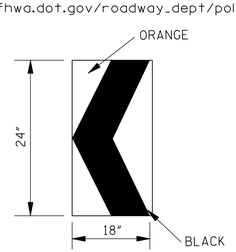


## CHEVRON SIGN DETAIL

1. A CHEVRON SIGN CONSISTS OF A BLACK CHEVRON TYPE MARKING ON AN ORANGE BACKGROUND AND SHALL POINT IN THE DIRECTION OF TRAFFIC FLOW.
2. THE CHEVRON SIGN SHALL BE MOUNTED ON CRASHWORTHY SUPPORT.
3. CHEVRON SIGNS MAY BE USED TO SUPPLEMENT OTHER STANDARD DEVICES WHERE ONE OR MORE LANES ARE CLOSED FOR CONSTRUCTION OR MAINTENANCE. THEY SHOULD BE PLACED APPROXIMATELY 2'-0" BEHIND THE LANE TRANSITION STRIPE.

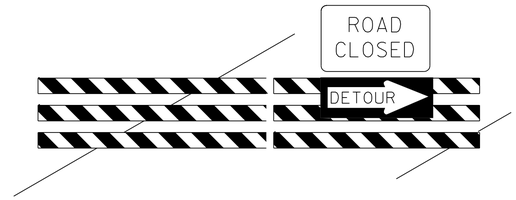


## BARRICADE CLOSING A ROAD

## BARRICADE CHARACTERISTICS

| | I | II | III |
|---|---|---|---|
| WIDTH OF RAIL ** | 8" MIN. - 12" MAX. | 8" MIN. - 12" MAX. | 8" MIN. - 12" MAX. |
| LENGTH OF RAIL** | 24" MIN. | 24" MIN. | 48" MIN. |
| WIDTH OF STRIPE * | 6" | 6" | 6" |
| HEIGHT | 36" MIN. | 36" MIN. | 60" MIN. |
| NUMBER OF RETROREFLECTORIZED RAIL FACES | 2 (ONE EACH DIRECTION) | 4 (TWO EACH DIRECTION) | 3 IF FACING TRAFFIC IN ONE DIRECTION 6 IF FACING TRAFFIC IN TWO DIRECTIONS |

* 1. FOR RAILS LESS THAN 36" LONG, 4" WIDE STRIPES MAY BE USED.

** 2. BARRICADES INTENDED FOR USE ON EXPRESSWAYS, FREEWAYS AND OTHER HIGH SPEED ROADWAYS, SHALL HAVE A MINIMUM OF 270 $in^2$ OF REFLECTIVE AREA FACING TRAFFIC.

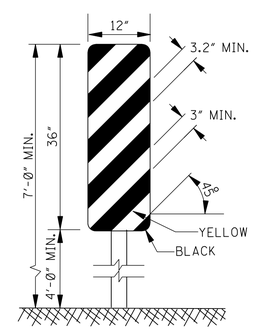


## TYPE 3 OBJECT MARKER

(OM-3R)

1. TYPE 3 OBJECT MARKERS SHALL BE USED AT ALL EXPOSED BRIDGE ABUTMENTS AND AT OTHER LOCATIONS AS DEEMED NECESSARY BY THE ENGINEER.
2. THE OM-3R IS SHOWN. THE OM-3L IS SIMILAR EXCEPT THE STRIPES SLOPE DOWNWARD FROM THE UPPER LEFT SIDE TO THE LOWER RIGHT SIDE AND SHALL BE PLACED ON THE LEFT SIDE OF THE OBJECT.
3. THE INSIDE EDGE OF THE MARKER SHALL BE IN LINE WITH THE INNER EDGE OF THE OBSTRUCTION.

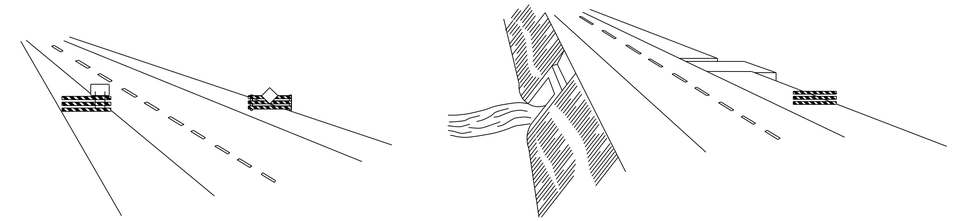

## WING BARRICADES

1. WING BARRICADES ARE TYPE III BARRICADES ERECTED ON THE SHOULDER ON ONE OR BOTH SIDES OF THE PAVEMENT TO GIVE THE SENSATION OF A NARROWING OR RESTRICTED ROADWAY. WING BARRICADES MAY BE USED AS A MOUNTING FOR THE ADVANCE WARNING SIGNS OR FLASHERS.
2. WING BARRICADES SHOULD BE USED:
   A. IN ADVANCE OF A CONSTRUCTION PROJECT EVEN WHEN NO PART OF THE ROADWAY IS ACTUALLY CLOSED.
   B. IN ADVANCE OF ALL BRIDGE OR CULVERT WIDENING OPERATIONS.

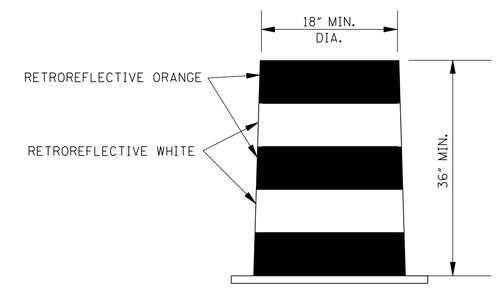


## PLASTIC DRUM STRIPING DETAIL

1. PLASTIC DRUMS SHALL BE ON END AND USED AS AN EXPEDIENT METHOD FOR TRAFFIC CHANNELIZATION. THE COLOR AND MARKING OF DRUMS SHALL BE CONSISTENT WITH MARKING STANDARDS FOR BARRICADE. THE PREDOMINANT COLOR ON DRUMS SHALL BE ORANGE WITH FOUR (4) RETROREFLECTIVE, HORIZONTAL, CIRCUMFERENTIAL STRIPES (2 ORANGE & 2 WHITE) 6" WIDE.
2. DRUMS SHOULD NEVER BE PLACED IN THE ROADWAY WITHOUT WARNING SIGNS.
3. WHERE PRACTICAL PLASTIC DRUMS SHOULD BE PLACED NO CLOSER THAN 3'-0" FROM THE EDGE OF TRAVELED LANE.

| DATE | REVISION | BY |
|---|---|---|

MISSISSIPPI DEPARTMENT OF TRANSPORTATION
ROADWAY DESIGN DIVISION
STANDARD PLAN

**HIGHWAY SIGN AND BARRICADE DETAILS FOR CONSTRUCTION PROJECTS**

MDOT MISSISSIPPI DEPARTMENT OF TRANSPORTATION

WORKING NUMBER TCP-8

ISSUE DATE: AUGUST 01, 2017

SHEET NUMBER 6358

| STATE | PROJECT NO. |
|---|---|
| MISS. | |

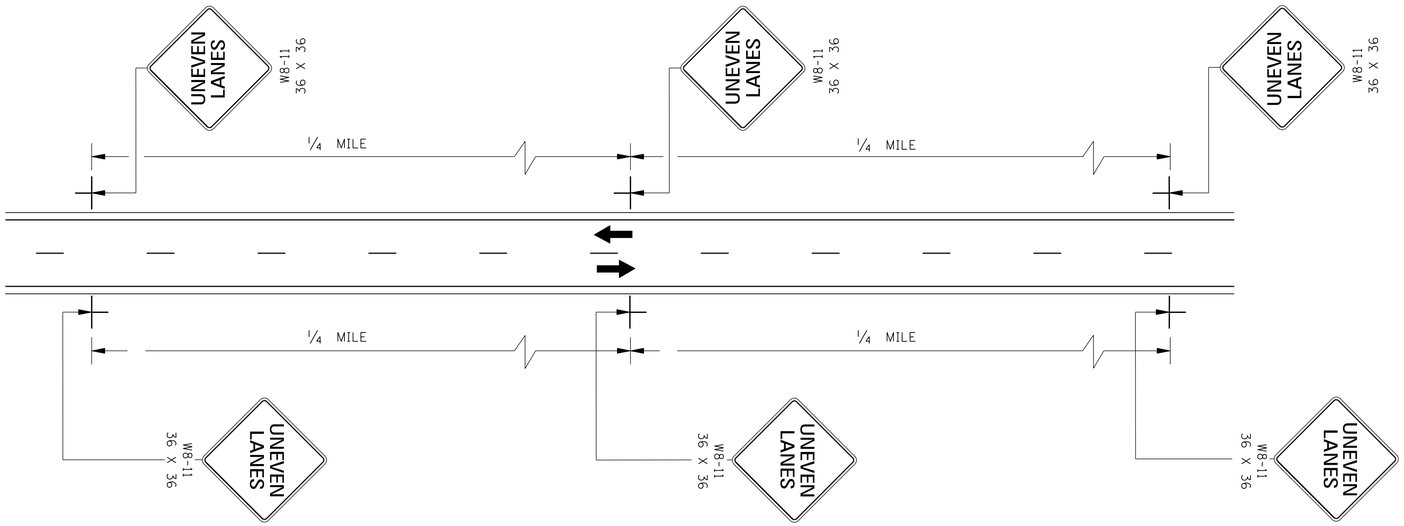


TWO–WAY TRAFFIC

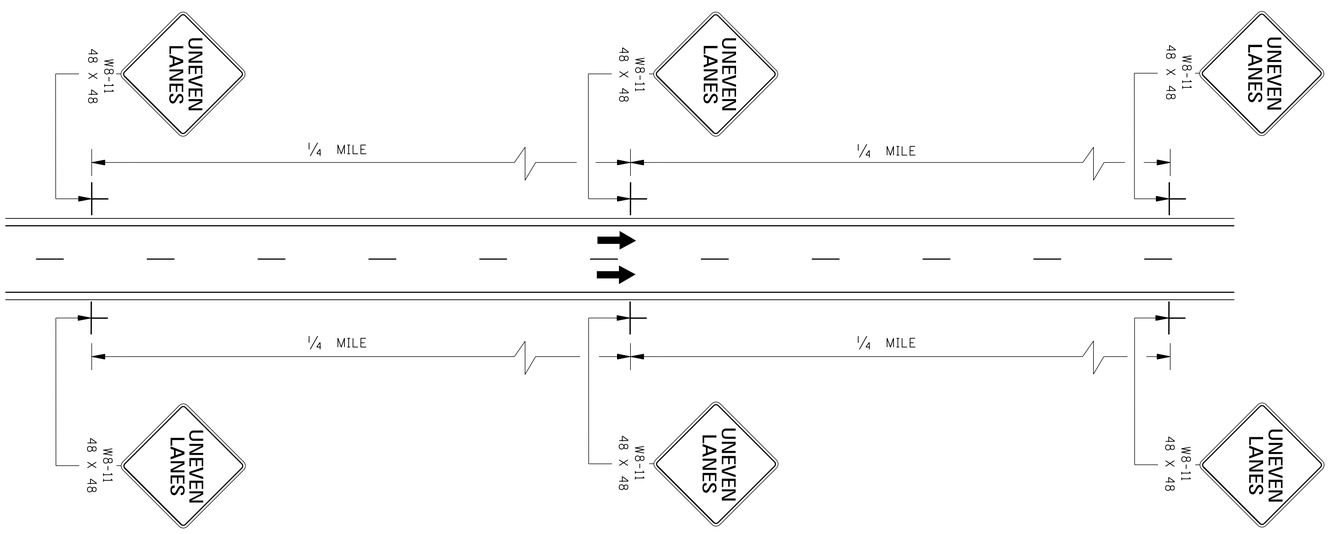


ONE–WAY TRAFFIC

GENERAL NOTES:

1. UNEVEN LANE LINE:
   A. IF LESS THAN OR EQUAL TO 1½", NO SIGNS REQUIRED.
   B. IF GREATER THAN 1½" AND LESS THAN OR EQUAL TO 2¼", PLACE SIGNS AS SHOWN ON THIS SHEET.
   C. IF GREATER THAN 2¼", TRAFFIC SHOULD NOT BE ALLOWED TO CROSS UNEVEN LANE LINE.
2. THE W8-11 SIGNS SHOULD BE SPACED AT ¼-MILE INTERVALS THROUGHOUT UNEVEN LANE LINE LIMITS.
3. ALL TRAFFIC CONTROL ITEMS SHOWN ON THIS SHEET SHALL BE PAID FOR UNDER MAINTENANCE OF TRAFFIC.

| DATE | REVISION | BY |
|---|---|---|
| | | |

MISSISSIPPI DEPARTMENT OF TRANSPORTATION
ROADWAY DESIGN DIVISION
STANDARD PLAN

**TRAFFIC CONTROL PLANS**
**UNEVEN PAVEMENT**
**DETAILS**

MDOT MISSISSIPPI DEPARTMENT OF TRANSPORTATION

WORKING NUMBER
TCP-12

ISSUE DATE: AUGUST 01, 2017

SHEET NUMBER
6362

| STATE | PROJECT NO. |
|---|---|
| MISS. | |

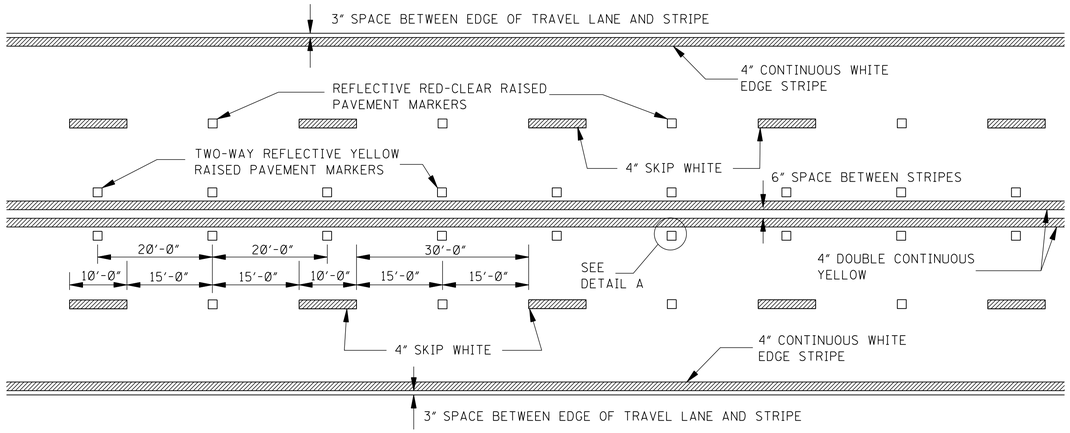


## TYPICAL STRIPING AND RAISED PAVEMENT MARKERS FOR 4–LANE SECTION

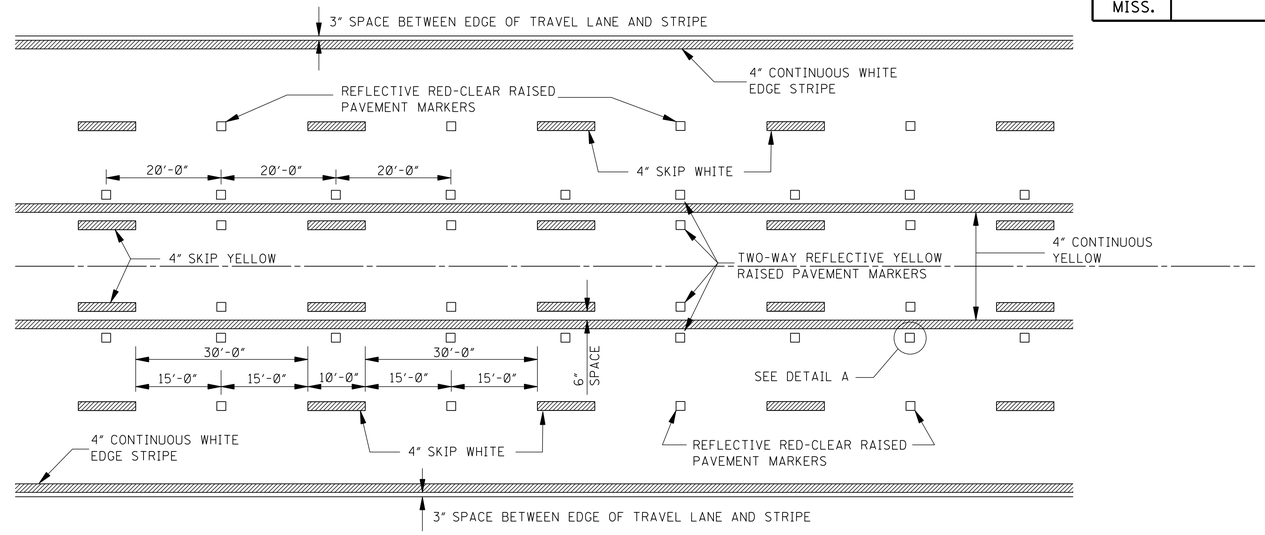


## TYPICAL STRIPING AND RAISED PAVEMENT MARKERS FOR 5–LANE SECTION

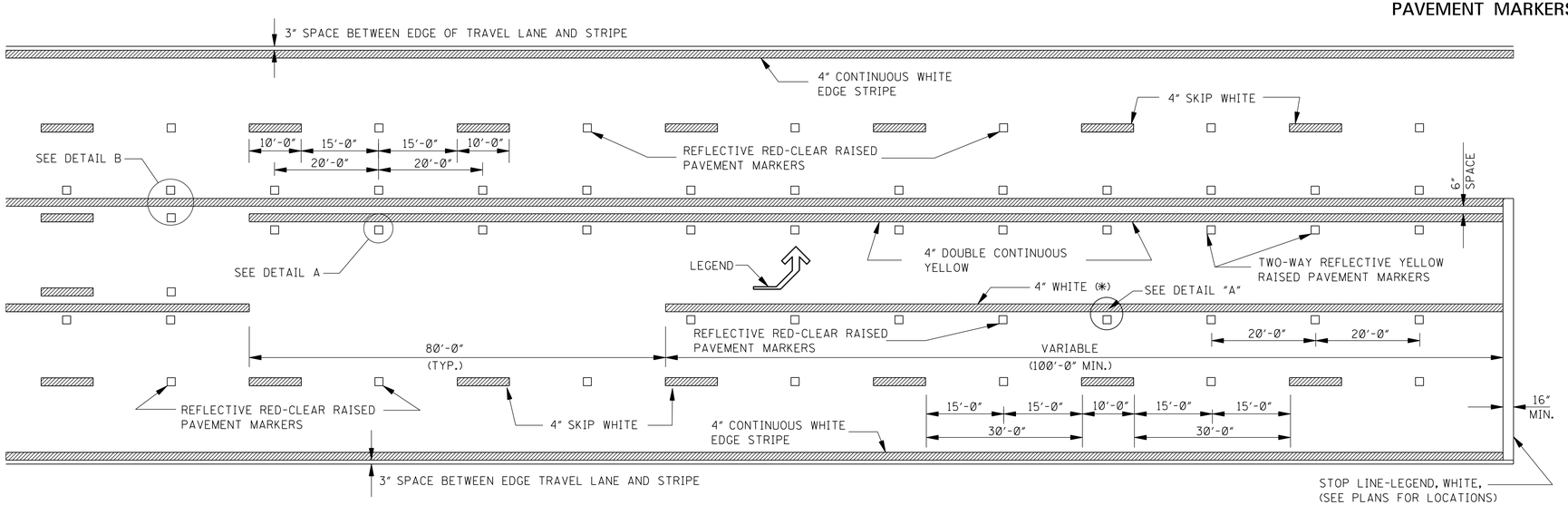


## TYPICAL STRIPING AND RAISED PAVEMENT MARKERS AT LEFT TURN LANES

*NOTE: USE DETAIL STRIPING IF LENGTH ≤ 150' AT THIS LOCATION, OTHERWISE USE CONTINUOUS STRIPING.

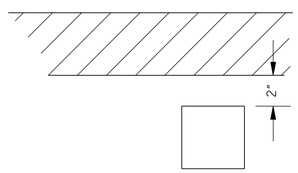


## DETAIL A
## LATERAL PLACEMENT OF PAVEMENT MARKERS

GENERAL NOTE:

1. PAVEMENT MARKERS SHALL BE HIGH PERFORMANCE RAISED PAVEMENT MARKERS AS LISTED IN THE MDOT "APPROVED SOURCES OF MATERIALS".
2. REFLECTIVE RAISED PAVEMENT MARKERS TO BE USED IF TEMPORARY MARKINGS ARE TO REMAIN IN PLACE OVER 3 MONTHS
3. TEMPORARY TURN ARROW TO BE PAID FOR AS TEMPORARY TRAFFIC STRIPE (LEGEND), ESTIMATED AT 10.9 SQ. FT. PER ARROW

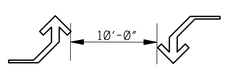


## TYPICAL TWO–WAY ARROW INSTALLATION

NOTES:
1. CONSIDER EACH SEGMENT OF CONTINUOUS TWO-WAY LEFT TURN LANE SEPARATELY.
2. IF SEGMENT IS LESS THAN 350', PLACE ONE SET OF ARROWS IN CENTER OF SEGMENT.
3. IF SEGMENT IS GREATER THAN 350', PLACE FIRST SET OF ARROWS 50' TO 100'. FROM BEGINNING AND/OR END OF SEGMENT AND SPACE ADDITIONAL SETS OF ARROWS (250' O.C.).

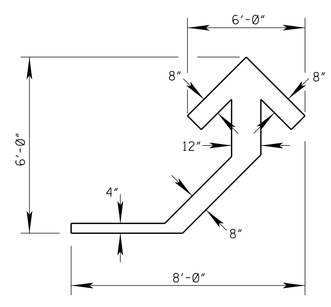


## DETAIL OF TEMPORARY TURN ARROW

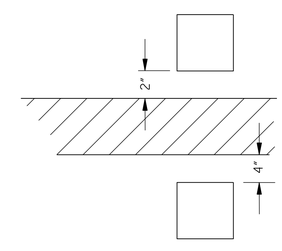


## DETAIL B
## LATERAL PLACEMENT OF PAVEMENT MARKERS

| DATE | REVISION | BY |
|---|---|---|
| | | |

MISSISSIPPI DEPARTMENT OF TRANSPORTATION
ROADWAY DESIGN DIVISION
STANDARD PLAN

# TEMPORARY STRIPING FOR TRAFFIC CONTROL 4–LANE AND 5–LANE UNDIVIDED ROADWAYS

MDOT MISSISSIPPI DEPARTMENT OF TRANSPORTATION

WORKING NUMBER TCP-14

ISSUE DATE: AUGUST 01, 2017

SHEET NUMBER 6364

| STATE | PROJECT NO. |
|---|---|
| MISS. | |

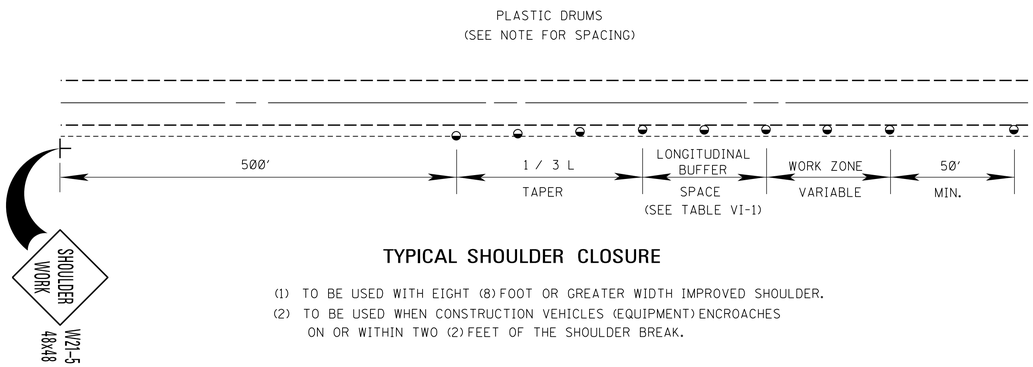


## TYPICAL SHOULDER CLOSURE

(1) TO BE USED WITH EIGHT (8) FOOT OR GREATER WIDTH IMPROVED SHOULDER.
(2) TO BE USED WHEN CONSTRUCTION VEHICLES (EQUIPMENT) ENCROACHES ON OR WITHIN TWO (2) FEET OF THE SHOULDER BREAK.

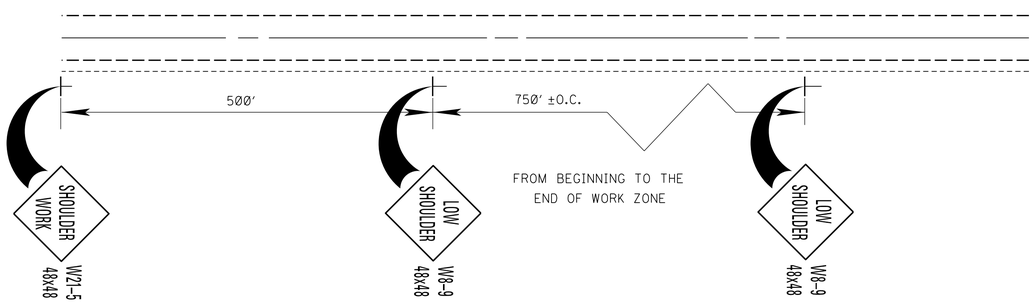


## TYPICAL SHOULDER WORK #1
## (SEE NOTE A–1 THIS SHEET)

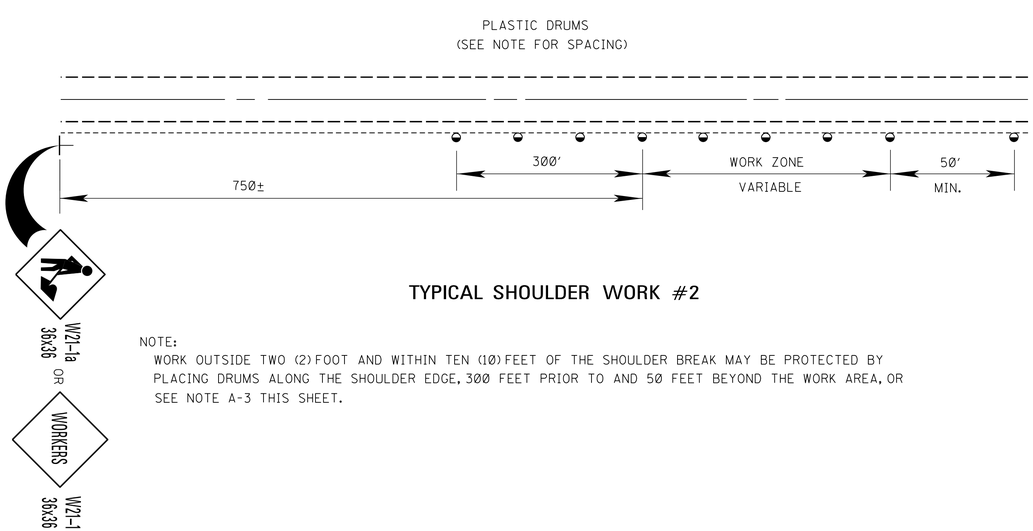


## TYPICAL SHOULDER WORK #2

NOTE:
WORK OUTSIDE TWO (2) FOOT AND WITHIN TEN (10) FEET OF THE SHOULDER BREAK MAY BE PROTECTED BY PLACING DRUMS ALONG THE SHOULDER EDGE, 300 FEET PRIOR TO AND 50 FEET BEYOND THE WORK AREA, OR SEE NOTE A-3 THIS SHEET.

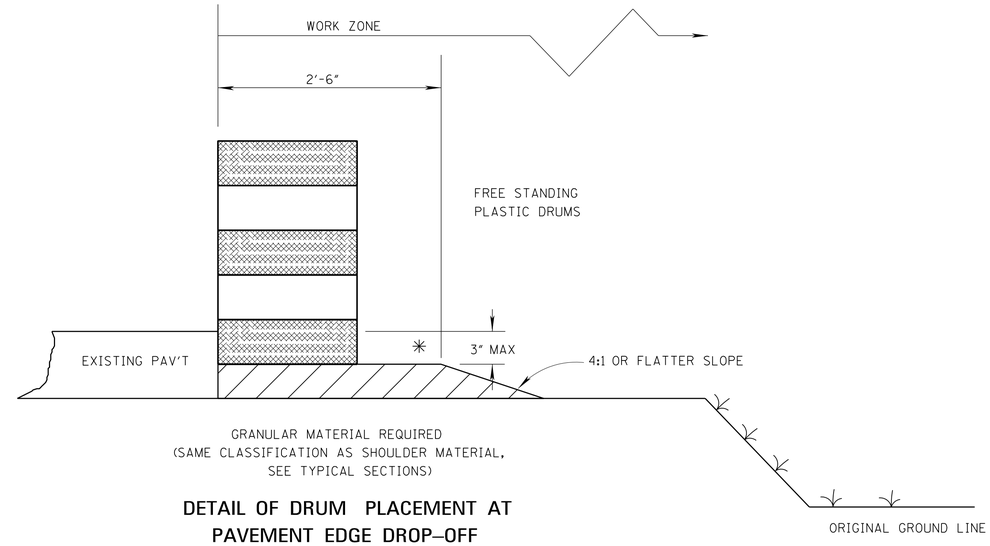


## DETAIL OF DRUM PLACEMENT AT PAVEMENT EDGE DROP–OFF

NOTES:

✳ A. PAVEMENT EDGE DROP-OFF

1. IF LESS THAN TWO AND ONE QUARTER (2.25) INCHES-NO PROTECTION REQUIRED. PLACE A SHOULDER WORK SIGN (W21-5) 500 FEET IN ADVANCE OF WORK ZONE SHOULDER AND A LOW SHOULDER SIGN (W8-9) AT THE BEGINNING AND THROUGHOUT THE WORK ZONE @ (750′+O.C.).

2. TWO AND ONE QUARTER TO THREE INCHES-PLACE DRUMS, VERTICAL PANELS OR BARRICADES EVERY 100 FEET ON TANGENT SECTIONS FOR SPEEDS OF 50 MILES PER HOUR OR GREATER. CONES MAY BE USED IN PLACE OF DRUMS, PANELS, AND BARRICADES DURING DAYLIGHT HOURS. FOR TANGENT SECTIONS WITH SPEEDS LESS THAN 50 MILES PER HOUR AND FOR CURVES, DEVICES SHOULD BE PLACED EVERY 50 FEET. SPACING FOR TAPERS SHOULD BE IN ACCORDANCE WITH THE M.U.T.C.D. (1 / 3 L, WHERE L IS THE TAPER LENGTH IN FEET.)

3. GREATER THAN THREE (3) INCHES-POSITIVE SEPARATION OR WEDGE WITH 4:1 OR FLATTER SLOPE NEEDED. IF THERE IS EIGHT (8) FEET OR MORE DISTANCE BETWEEN THE EDGE OF TRAVEL LANE AND DROP-OFF, THEN DRUMS, PANELS OR BARRICADES MAY BE USED.

4. FOR TEMPORARY CONDITIONS, DROP-OFFS GREATER THAN THREE (3) INCHES MAY BE PROTECTED WITH DRUMS, VERTICAL PANELS OR BARRICADES FOR SHORT DISTANCES DURING DAYLIGHT HOURS WHILE WORK IS BEING DONE IN THE DROP-OFF AREA.

5. LESSER TREATMENTS THAN THOSE DESCRIBED ABOVE MAY BE CONSIDERED FOR LOW-VOLUME LOCAL STREETS.

B. DRUM SPACING

1. TANGENTS = 2 X S
2. TAPERS = L / 3
   WHERE L = S X W
   L = TAPER LENGTH IN FEET
   S = SPEED IN MPH (POSTED OR 85 PERCENTILE)
   W = WIDTH OF OFFSET IN FEET

C. ALL TRAFFIC CONTROL ITEMS SHOWN ON THIS SHEET SHALL BE PAID FOR UNDER MAINTENANCE OF TRAFFIC.

TABLE VI-1. GUIDELINES FOR LENGTH OF LONGITUDINAL BUFFER SPACE

| ✳✳ SPEED (MPH) | LENGTH (FEET) |
|---|---|
| 20 | 35 |
| 25 | 55 |
| 30 | 85 |
| 35 | 120 |
| 40 | 170 |
| 45 | 220 |
| 50 | 280 |
| 55 | 335 |
| 60 | 415 |
| 65 | 485 |

✳✳ POSTED SPEED, OFF-PEAK 85 PERCENTILE SPEED PRIOR TO WORK STARTING, OR THE ANTICIPATED OPERATING SPEED IN MPH.

| DATE | REVISION | BY |
|---|---|---|
| | | |

MISSISSIPPI DEPARTMENT OF TRANSPORTATION
ROADWAY DESIGN DIVISION
STANDARD PLAN

# TRAFFIC CONTROL DETAILS DRUM PLACEMENT AND SHOULDER CLOSURE

MDOT MISSISSIPPI DEPARTMENT OF TRANSPORTATION

WORKING NUMBER
TCP-16

ISSUE DATE: AUGUST 01, 2017

SHEET NUMBER
6366

| STATE | PROJECT NO. |
|---|---|
| MISS. | |

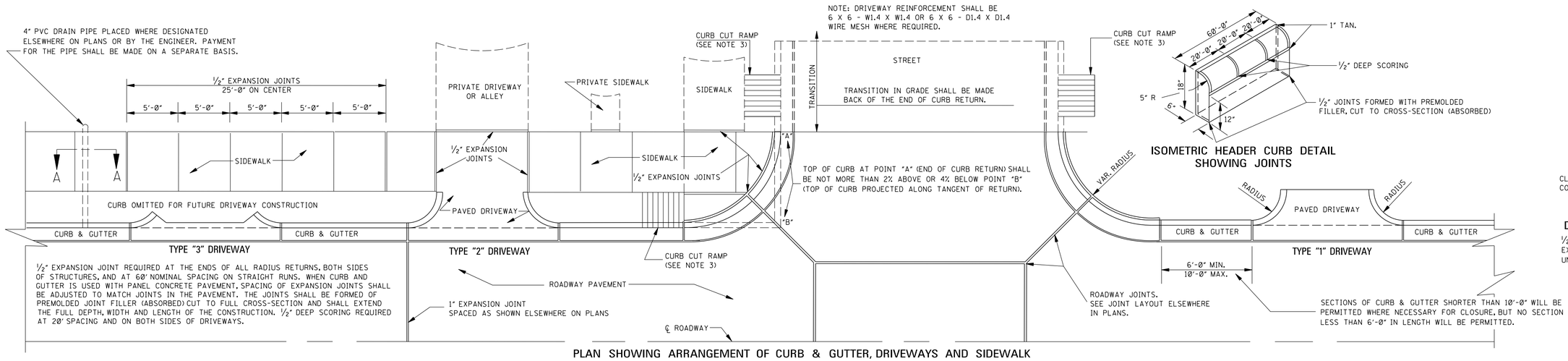


PLAN SHOWING ARRANGEMENT OF CURB & GUTTER, DRIVEWAYS AND SIDEWALK




ISOMETRIC HEADER CURB DETAIL SHOWING JOINTS

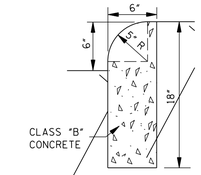


DETAIL OF HEADER CURB

½" CONTRACTION JOINTS REQUIRED AT 20' O.C.
EXPANSION JOINTS REQUIRED AT 60' O.C.
UNLESS OTHERWISE DIRECTED BY ENGINEER.

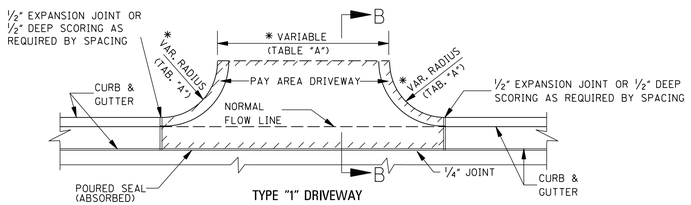


TYPE "1" DRIVEWAY
PLAN OF CONCRETE DRIVEWAY

11.058 $yd^2$ FOR DRIVEWAY 16'-0" IN WIDTH.
0.574 $yd^2$ FOR EACH ADDED OR SUBTRACTED FOOT OF WIDTH.
NOTE: THIS DRIVEWAY AREA EXAMPLE IS COMPUTED ON THE BASIS OF 3'-0" RADIUS. PAYMENT FOR CURB RADIUS SHALL BE INCLUDED IN COMPENSATION FOR DRIVEWAY.

| * TABLE "A" | | |
|---|---|---|
| DRIVEWAY TYPE | DRIVEWAY WIDTH | CURB RETURN RADIUS |
| RESIDENTIAL | 16' | 5' - 10' |
| COMMERCIAL/ INDUSTRIAL | 30' - 50' | 10' - 30' |

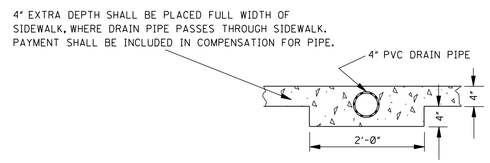


SECTION A–A

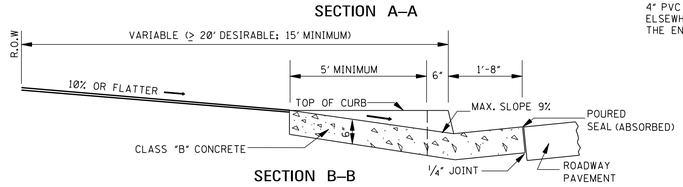


SECTION B–B

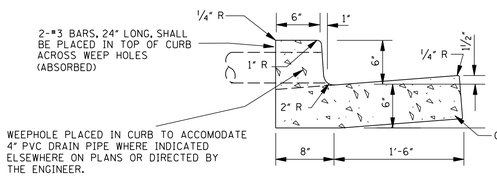


TYPE "1"
DETAIL OF COMBINATION CURB & GUTTER

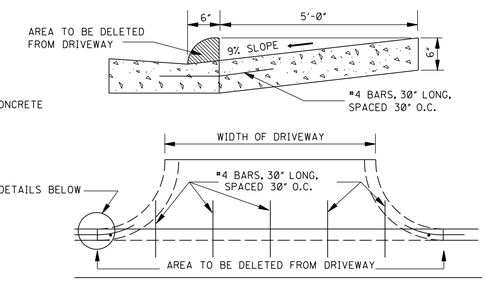


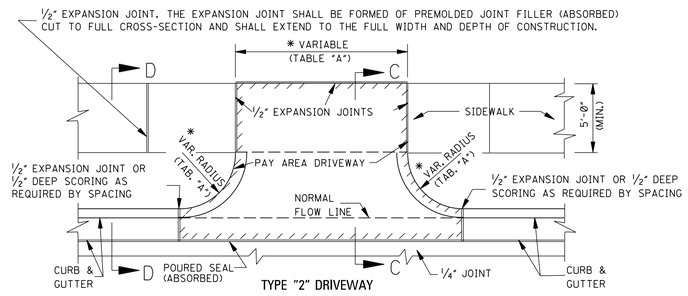


TYPE "2" DRIVEWAY
PLAN OF CONCRETE DRIVEWAY ACROSS SIDEWALK AREA

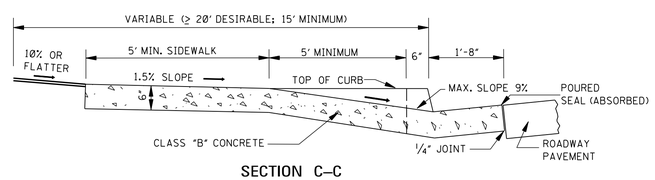


SECTION C–C




TYPE "2"
DETAIL OF COMBINATION CURB & GUTTER

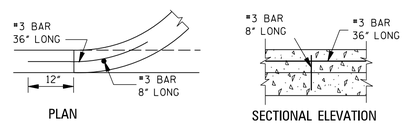


PERMISSIBLE DRIVEWAY CONSTRUCTION METHOD FOR SLIP–FORM PLACEMENT OF CURB & GUTTER

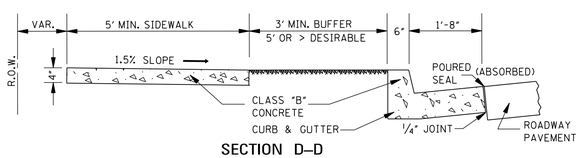


SECTION D–D

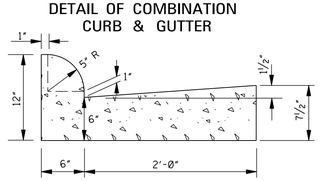


TYPE "3A"
DETAIL OF COMBINATION CURB & GUTTER

GENERAL NOTES:

1. TRAVERSE CONTRACTION JOINTS ARE REQUIRED AT 20' ON CENTER FOR ALL CONCRETE DRIVEWAYS THAT EXTEND PAST THE END OF THE CURB RETURN. A ½" WIDE EXPANSION JOINT IS REQUIRED AT THE END OF THE CURB RETURN AND AT 60' ON CENTER THROUGHOUT THE LENGTH OF THE DRIVEWAY. A LONGITUDINAL CONTRACTION JOINT IS REQUIRED FOR ALL DRIVEWAYS EXCEEDING 20' IN WIDTH.
2. SEE WK. NOS. CR-1, CR-2, CR-3 & CR-4 FOR DETAILS OF CURB-CUT RAMPS.
3. MAXIMUM 2% CROSS-SLOPE ON SIDEWALKS.

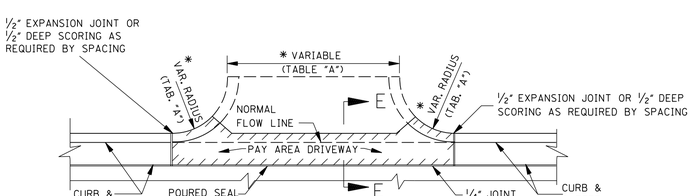


TYPE "3" DRIVEWAY
PLAN–CURB OMITTED FOR FUTURE DRIVEWAY CONSTRUCTION

NOTE: THIS TYPE CONSTRUCTION SHALL BE USED WHERE DESIGNATED ELSEWHERE ON PLANS OR BY THE ENGINEER.

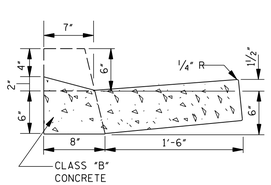


SECTION E–E

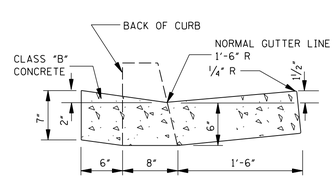


DETAIL OF VALLEY GUTTER

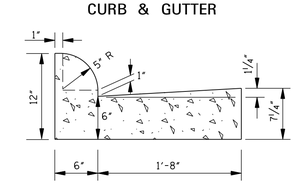


TYPE "3B"
DETAIL OF COMBINATION CURB & GUTTER

| DATE | REVISION | BY |
|---|---|---|
| | | |

MISSISSIPPI DEPARTMENT OF TRANSPORTATION
ROADWAY DESIGN DIVISION
STANDARD PLAN

**DRIVEWAYS, CURB & GUTTER, & SIDEWALK**

MDOT MISSISSIPPI DEPARTMENT OF TRANSPORTATION

WORKING NUMBER SD-1

ISSUE DATE: AUGUST 01, 2017

SHEET NUMBER 6419

| STATE | PROJECT NO. |
|---|---|
| MISS. | |

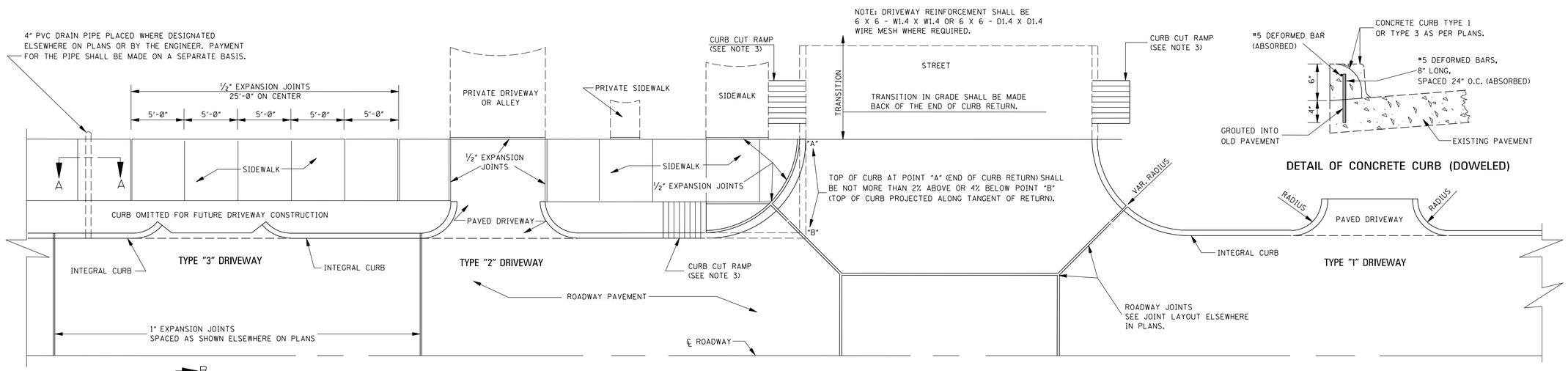


PLAN SHOWING ARRANGEMENT OF INTEGRAL CURB, DRIVEWAYS AND SIDEWALK

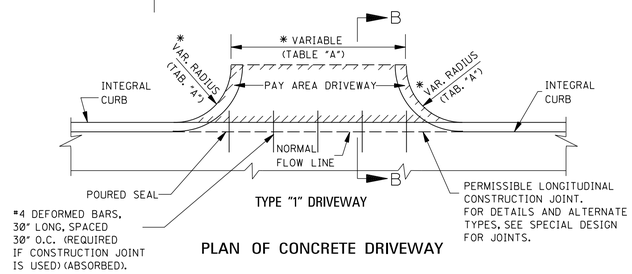


PLAN OF CONCRETE DRIVEWAY

5.761 $yd^2$ FOR DRIVEWAY 16'-0" IN WIDTH.
0.333 $yd^2$ FOR EACH ADDED OR SUBTRACTED FOOT OF WIDTH.
NOTE: THIS DRIVEWAY AREA EXAMPLE IS COMPUTED ON THE BASIS OF 3'-0" RADIUS. PAYMENT FOR CURB RADIUS SHALL BE INCLUDED IN COMPENSATION FOR DRIVEWAY.

| *TABLE "A" | | |
|---|---|---|
| DRIVEWAY TYPE | DRIVEWAY WIDTH (ft) | CURB RETURN RADIUS (ft) |
| RESIDENTIAL | 16' | 5' - 10' |
| COMMERCIAL/ INDUSTRIAL | 30' - 50' | 10' - 30' |

¼" EXPANSION JOINT. THE EXPANSION JOINT SHALL BE FORMED OF PREMOLDED JOINT FILLER CUT TO FULL CROSS-SECTION AND SHALL EXTEND TO THE FULL WIDTH AND DEPTH OF CONSTRUCTION.

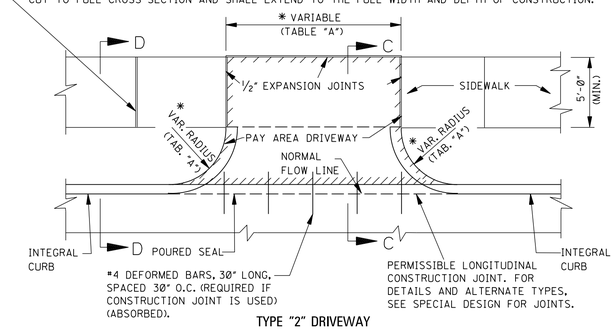


TYPE "2" DRIVEWAY

PLAN OF CONCRETE DRIVEWAY ACROSS SIDEWALK AREA

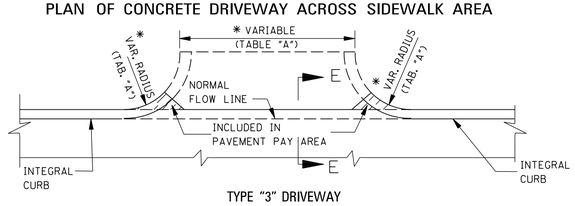


TYPE "3" DRIVEWAY

PLAN–CURB OMITTED FOR FUTURE DRIVEWAY CONSTRUCTION

NOTE: THIS TYPE CONSTRUCTION SHALL BE USED WHERE DESIGNATED ELSEWHERE ON PLANS OR BY THE ENGINEER.

4" EXTRA DEPTH SHALL BE PLACED FULL WIDTH OF SIDEWALK, WHERE DRAIN PIPE PASSES THROUGH SIDEWALK. PAYMENT SHALL BE INCLUDED IN COMPENSATION FOR PIPE.

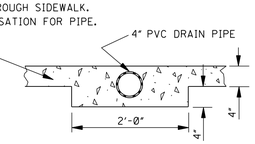


SECTION A–A

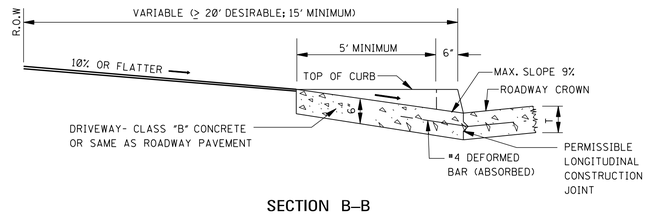


SECTION B–B

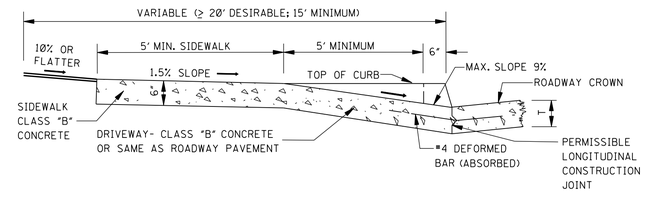


SECTION C–C

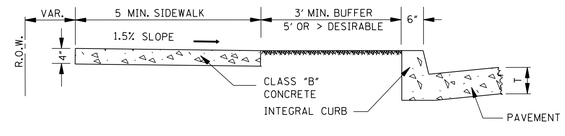


SECTION D–D

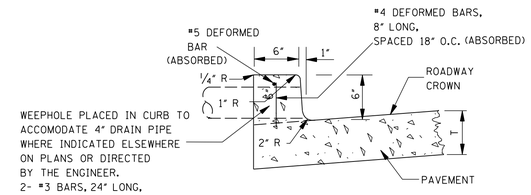


TYPE "1"
DETAIL OF INTEGRAL CURB

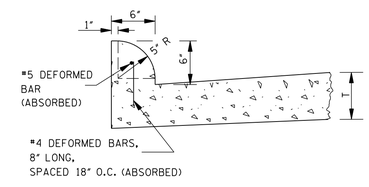


TYPE "3"
DETAIL OF INTEGRAL CURB

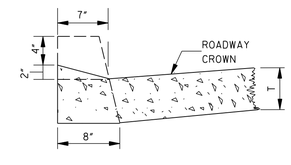


SECTION E–E




DETAIL OF CONCRETE CURB (DOWELED)

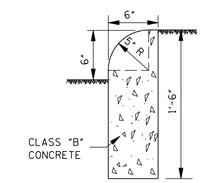


DETAIL OF HEADER CURB

CONTRACTION JOINTS REQUIRED AT 20' O.C.
EXPANSION JOINTS REQUIRED AT 60' O.C.
UNLESS OTHERWISE DIRECTED BY ENGINEER.

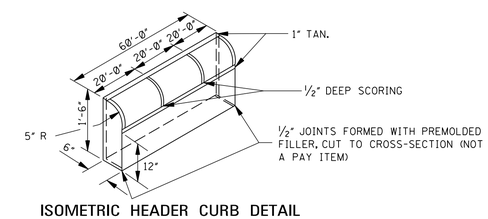


ISOMETRIC HEADER CURB DETAIL SHOWING JOINTS

GENERAL NOTES:

1. TRAVERSE CONTRACTION JOINTS ARE REQUIRED AT 20' ON CENTER FOR ALL CONCRETE DRIVEWAYS THAT EXTEND PAST THE END OF THE CURB RETURN. A ½" WIDE EXPANSION JOINT IS REQUIRED AT THE END OF THE CURB RETURN AND AT 60' ON CENTER THROUGHOUT THE LENGTH OF THE DRIVEWAY. A LONGITUDINAL CONTRACTION JOINT IS REQUIRED FOR ALL DRIVEWAYS EXCEEDING 20' IN WIDTH.
2. SEE WK. NOS. CR-1, CR-2, CR-3 & CR-4 FOR DETAILS OF CURB-CUT RAMPS.
3. MAXIMUM 2% CROSS-SLOPE ON SIDEWALKS.

| DATE | REVISION | BY |
|---|---|---|
| | | |

MISSISSIPPI DEPARTMENT OF TRANSPORTATION
ROADWAY DESIGN DIVISION
STANDARD PLAN

**DRIVEWAYS, INTEGRAL CURB & SIDEWALK**

MDOT MISSISSIPPI DEPARTMENT OF TRANSPORTATION

WORKING NUMBER SD-2

ISSUE DATE: AUGUST 01, 2017

SHEET NUMBER 6420

| STATE | PROJECT NO. |
|---|---|
| MISS. | |

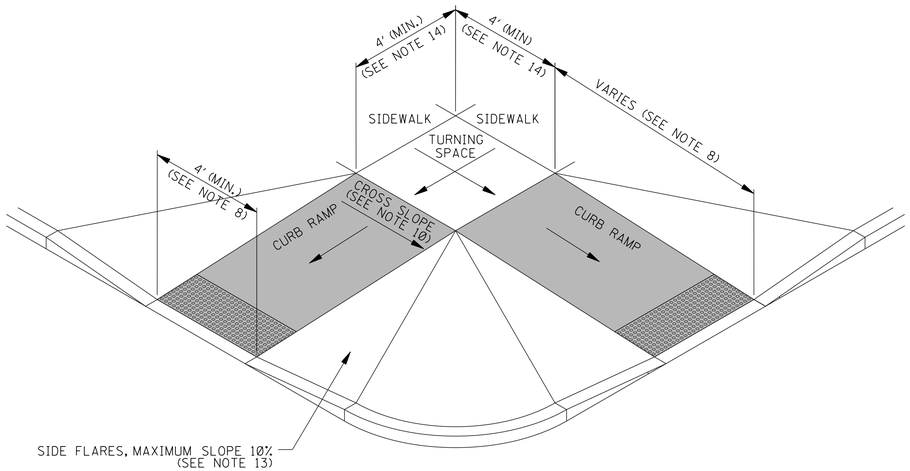


## TYPE 1 – PERPENDICULAR CURB RAMP

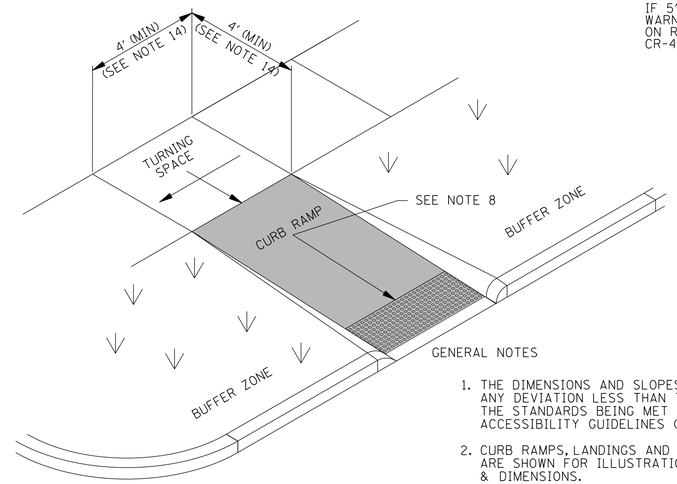


## TYPE 2 – PERPENDICULAR RETURNED CURB RAMP

SIDES OF CURB RAMPS MAY BE RETURNED, PROVIDING USEFUL DIRECTIONAL CUES, IF PROTECTED FROM CROSS TRAVEL BY LANDSCAPING, STREET FURNITURE, POLES, OR EQUIPMENT.

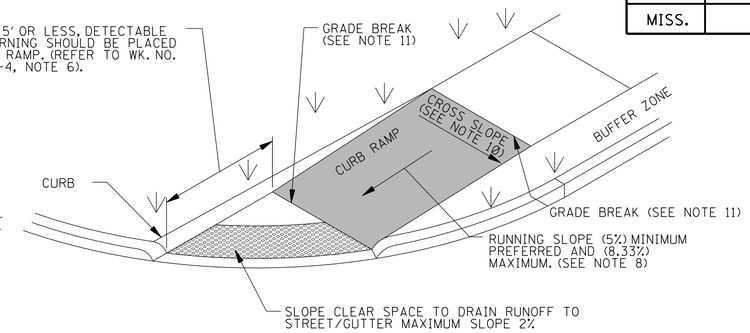


## TYPE 3 – ALTERNATE PERPENDICULAR RETURNED CURB RAMP

GENERAL NOTES

1. THE DIMENSIONS AND SLOPES PRESENTED IN THE DETAILS ARE THE MINIMUM NECESSARY TO COMPLY WITH THE ADA AND MDOT STANDARDS. ANY DEVIATION LESS THAN THE MINIMUM WIDTH OR GREATER THAN THE MAXIMUM SLOPE FROM THESE STANDARDS MUST BE DOCUMENTED WITH THE STANDARDS BEING MET TO THE GREATEST EXTENT PRACTICABLE AND CONSISTENT WITH THE MOST CURRENT PUBLIC RIGHT-OF-WAY ACCESSIBILITY GUIDELINES (PROWAG).
2. CURB RAMPS, LANDINGS AND BLENDED TRANSITIONS MAY REQUIRE THE USE OF DETECTABLE WARNINGS. DETECTABLE WARNINGS ON THIS SHEET ARE SHOWN FOR ILLUSTRATION ONLY. REFER TO THE DETECTABLE WARNING DETAILS ON WK. NO. CR-4 FOR DETAILS ON PLACEMENT, ORIENTATION & DIMENSIONS.
3. THE LOCATION, ORIENTATION, AND TYPE OF CURB RAMPS SHOULD BE AS SHOWN IN THE PLANS.
4. ANY COMBINATION OF PERPENDICULAR, PERPENDICULAR RETURNED, AND PARALLEL CURB RAMPS MAY BE USED TO ACHIEVE AN ACCESSIBLE DESIGN AS LONG AS THE BASIC REQUIREMENTS FOR CURB RAMPS ARE MET.
5. CURB RAMPS SHALL BE PAID FOR AS SIDEWALK.
6. THE THICKNESS OF THE CURB RAMP SHALL BE A MINIMUM OF 4".
7. BEYOND THE BOTTOM GRADE BREAK, A CLEAR SPACE OF 4' MINIMUM BY 4' MINIMUM SHALL BE PROVIDED WITHIN THE WIDTH OF THE PEDESTRIAN STREET CROSSING AND WHOLLY OUTSIDE THE PARALLEL VEHICLE TRAVEL LANE.

CURB RAMP NOTES:

8. THE CLEAR WIDTH OF CURB RAMP RUNS (EXCLUDING ANY FLARED SIDES), BLENDED TRANSITIONS, AND TURNING SPACES SHALL BE THE WIDTH OF THE SIDEWALK, OR 4' MINIMUM. THE RUNNING SLOPE OF A CURB RAMP SHALL BE 5% MINIMUM, AND 8.33% MAXIMUM (7.1% PREFERRED). THE RUNNING SLOPE OF BLENDED TRANSITIONS SHALL BE 5% MAXIMUM.
9. WHERE THE SLOPE OF THE ROADWAY EXCEEDS 8.33%, THE CURB RAMP LENGTH IS THE LENGTH NECESSARY TO MEET THE EXISTING SIDEWALK. IT IS NOT NECESSARY THAT THE RAMP EXCEED 15'.
10. THE CROSS SLOPE OF CURB RAMPS, BLENDED TRANSITIONS, AND TURNING SPACES SHALL BE 2% MAXIMUM (1.5% PREFERRED). AT PEDESTRIAN STREET CROSSINGS WITHOUT YIELD OR STOP CONTROL AND AT MIDBLOCK PEDESTRIAN STREET CROSSINGS, THE CROSS SLOPE IS PERMITTED TO EQUAL THE STREET OR HIGHWAY GRADE.
11. GRADE BREAKS AT THE TOP AND BOTTOM OF CURB RAMP RUNS SHALL BE PERPENDICULAR TO THE DIRECTION OF THE RAMP RUN. GRADE BREAKS SHALL NOT BE PERMITTED ON THE SURFACE OF RAMP RUNS AND TURNING SPACES. SURFACE SLOPES THAT MEET AT GRADE BREAKS SHALL BE FLUSH.
12. RAMP TRANSITIONS BETWEEN WALKS, TURNING SPACES, LANDINGS, GUTTERS, OR STREETS SHALL BE FLUSH AND FREE OF ABRUPT VERTICAL CHANGES.
13. WHERE A PEDESTRIAN CIRCULATION PATH CROSSES THE CURB RAMP, FLARED SIDES SHALL BE SLOPED 10% MAXIMUM, MEASURED PARALLEL TO THE CURB LINE.

TURNING SPACE NOTES:

14. A TURNING SPACE 4' MINIMUM BY 4' MINIMUM SHALL BE PROVIDED AT THE TOP OF PERPENDICULAR RAMPS AND AT THE BOTTOM OF PARALLEL RAMPS. TURNING SPACES ARE ALLOWED TO OVERLAP OTHER TURNING SPACES AND CLEAR SPACES. IF THE TURNING SPACE IS CONSTRAINED BY A CURB, WALL, OR OTHER OBSTRUCTION, THE TURNING SPACE SHALL BE 4' MINIMUM BY 5' MINIMUM, WITH THE 5' DIMENSION PROVIDED IN THE DIRECTION OF TRAVEL TOWARD THE CONSTRAINT.
15. THE RUNNING SLOPE OF TURNING SPACES SHALL BE 2% MAXIMUM (1.5% PREFERRED). THE CROSS SLOPE OF TURNING SPACES SHALL BE 2% MAXIMUM (1.5% PREFERRED). AT PEDESTRIAN STREET CROSSINGS WITHOUT YIELD OR STOP CONTROL AND AT MIDBLOCK PEDESTRIAN STREET CROSSINGS, THE CROSS SLOPE SHALL BE PERMITTED TO EQUAL THE STREET OR HIGHWAY GRADE.
16. BEYOND THE BOTTOM GRADE BREAK, A CLEAR SPACE 4' MINIMUM BY 4' MINIMUM SHALL BE PROVIDED WITHIN THE WIDTH OF THE PEDESTRIAN STREET CROSSING AND WHOLLY OUTSIDE THE PARALLEL VEHICLE TRAVEL LANE.
17. THE COUNTER SLOPE OF THE GUTTER OR STREET AT THE FOOT OF CURB RAMP RUNS, BLENDED TRANSITIONS, AND TURNING SPACES SHALL BE 5% MAXIMUM. IT IS BEST PRACTICE TO PROVIDE A 2' LEVEL STRIP AT THE GUTTER IF THE GRADE BREAK EXCEEDS 11%.

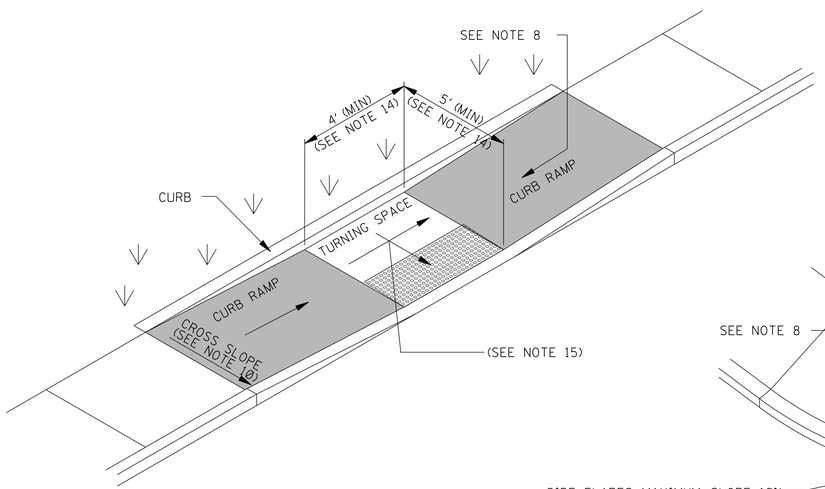


## TYPE 4 – PARALLEL CURB RAMP

THE CURB BEHIND THE TURNING SPACE AND RAMPS IS NOT REQUIRED, BUT IS SUGGESTED FOR RETAINING SOIL AND PROVIDING AN EDGE FOR PEDESTRIANS WITH VISUAL IMPAIRMENTS.

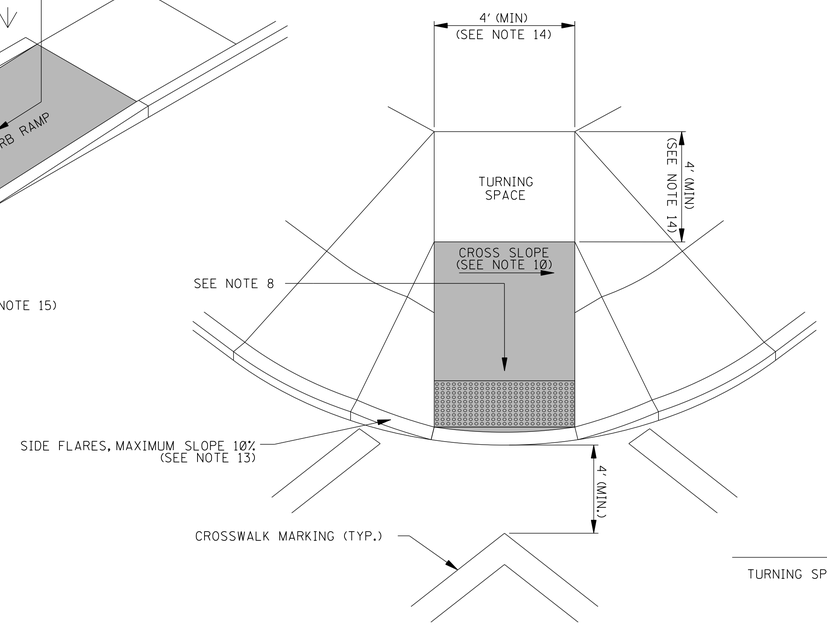


## TYPE 5 – DIAGONAL CURB RAMP

DIAGONAL CURB RAMPS ARE UNACCEPTABLE IN NEW CONSTRUCTION. THEY MAY BE USED FOR ALTERATIONS ONLY IF IT IS THE ONLY OPTION THAT WILL WORK.

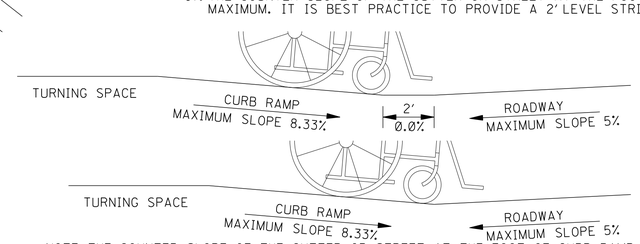


NOTE: THE COUNTER SLOPE OF THE GUTTER OR STREET AT THE FOOT OF CURB RAMP RUNS, BLENDED TRANSITIONS, AND TURNING SPACES SHALL BE 5% MAXIMUM. IT IS BEST PRACTICE TO PROVIDE A 2' LEVEL STRIP AT THE GUTTER IF THE GRADE BREAK EXCEEDS 11%

## COUNTER SLOPE CONDITIONS

| DATE | REVISION | BY |
|---|---|---|
| | | |

MISSISSIPPI DEPARTMENT OF TRANSPORTATION
ROADWAY DESIGN DIVISION
STANDARD PLAN

# CURB RAMPS
# RAMP DESIGN ELEMENTS

ISSUE DATE: AUGUST 01, 2017

WORKING NUMBER CR-1

SHEET NUMBER 6421

| STATE | PROJECT NO. |
|---|---|
| MISS. | |

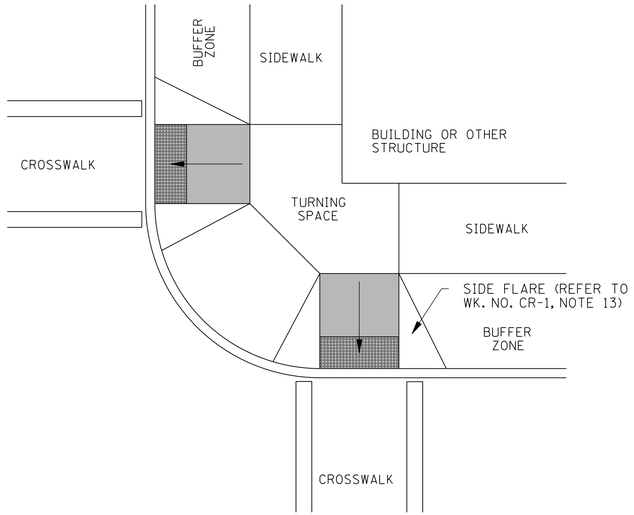


CURB RAMP CONFIGURATION: TYPE A

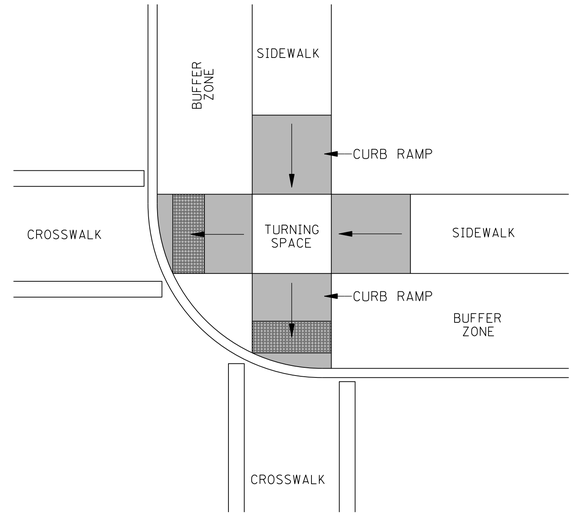


CURB RAMP CONFIGURATION: TYPE B

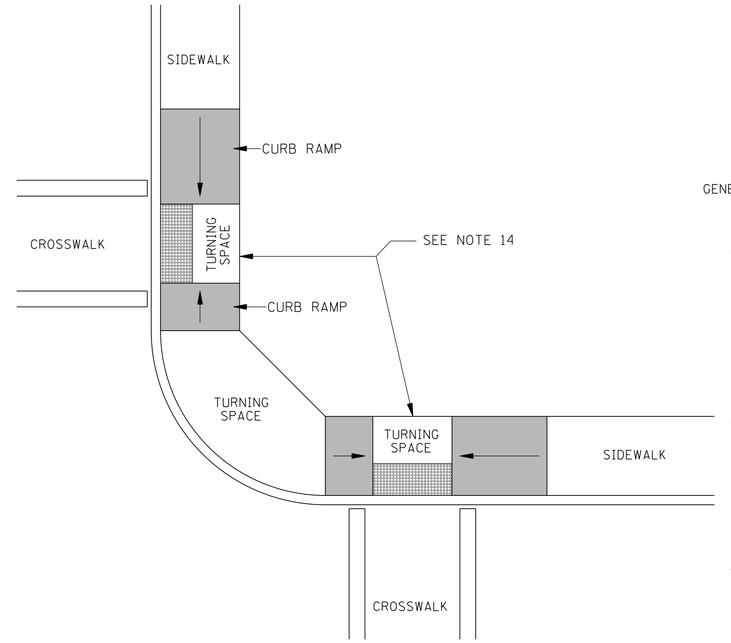


CURB RAMP CONFIGURATION: TYPE C

GENERAL NOTES:

1. FOR DIMENSIONS & GEOMETRIC VALUES REFER TO WK. NO. CR-1.
2. THE CONFIGURATIONS SHOWN GENERICALLY REPRESENT THE MOST COMMON SITUATIONS ENCOUNTERED. THEY ARE INTENDED TO PRESENT CURB RAMP DESIGN CONCEPTS. SITE CONDITIONS AT INDIVIDUAL LOCATIONS REQUIRE SPECIFIC DESIGNS. CURB RAMP DESIGNS MUST BE CONSISTENT WITH THE PROVISIONS OF WK. NOS. CR-1, CR-2, CR-3 AND CR-4.
3. COORDINATE TRAFFIC CONTROL DEVICES, UTILITY LOCATIONS, SIGNS, STREET FURNITURE AND DRAINAGE TO ENSURE A CONTINUOUS PEDESTRIAN ACCESS ROUTE AT ALL CURB RAMP LOCATIONS. GUIDANCE FOR CROSSWALK MARKINGS AND TRAFFIC CONTROL DEVICES IS PROVIDED IN THE MUTCD.
4. DETECTABLE WARNINGS SHOWN ON THIS SHEET ARE FOR ILLUSTRATION ONLY. FOR SPECIFIC PLACEMENT ORIENTATIONS AND DIMENSIONS REFER TO WK. NO. CR-4.
5. THE CROSS SLOPE OF CURB RAMPS, BLENDED TRANSITIONS, AND TURNING SPACES SHALL BE 2% MAXIMUM (1.5% PREFERRED). AT PEDESTRIAN STREET CROSSINGS WITHOUT YIELD OR STOP CONTROL AND AT MIDBLOCK PEDESTRIAN STREET CROSSINGS, THE CROSS SLOPE SHALL BE PERMITTED TO EQUAL THE STREET OR HIGHWAY GRADE.
6. DIAGONAL CURB RAMPS ARE UNACCEPTABLE IN NEW CONSTRUCTION. THEY MAY BE USED FOR ALTERATIONS ONLY IF IT IS THE ONLY OPTION THAT WILL WORK.
7. GRATES SHALL NOT BE LOCATED ON CURB RAMPS, BLENDED TRANSITIONS, TURNING SPACES, OR LANDINGS. ACCESS COVERS OF SIMILAR SURFACES SHALL COMPLY WITH APPLICABLE SURFACE REQUIREMENTS.
8. UTILITIES, SIGNS, AND OTHER FIXED OBJECTS SHALL NOT BE PLACED ON A CURB RAMP, PEDESTRIAN ACCESS ROUTE, OR IN A MANNER THAT INTERFERES WITH THE USE OF THE CURB RAMP.
9. THE SURFACE OF ALL CURB RAMPS SHALL BE STABLE, FIRM, AND SLIP RESISTANT. A COARSE BROOM FINISH RUNNING PERPENDICULAR TO THE SLOPE IS RECOMMENDED ON CONCRETE RAMP SURFACES, EXCLUSIVE OF THE DETECTABLE WARNING FIELDS.
10. THERE SHALL BE A CLEAR SPACE AT THE BOTTOM OF THE ALTERNATE PERPENDICULAR RETURNED CURB RAMP. IT SHALL SLOPE TO DRAIN RUNOFF TO STREET/GUTTER AND HAVE A MAXIMUM SLOPE OF 2% (1.5% PREFERRED).
11. TURNING SPACES MAY OVERLAP WITH ADJACENT TURNING SPACES OR A SINGLE TURNING SPACE MAY SERVE MULTIPLE CURB RAMPS.
12. TURNING SPACES MAY OVERLAP WITH THE CLEAR GROUND SPACE REQUIRED AT PEDESTRIAN SIGNAL PUSH BUTTONS.
13. THE CLEAR WIDTH OF PEDESTRIAN ACCESS ROUTES WITHIN MEDIANS AND PEDESTRIAN REFUGE ISLANDS SHALL BE 5' MINIMUM.
14. BEYOND THE BOTTOM GRADE BREAK, A TURNING SPACE OF 4' MINIMUM BY 4' MINIMUM SHALL BE PROVIDED WITHIN THE WIDTH OF THE PEDESTRIAN STREET CROSSING AND WHOLLY OUTSIDE THE PARALLEL VEHICLE TRAVEL LANE.

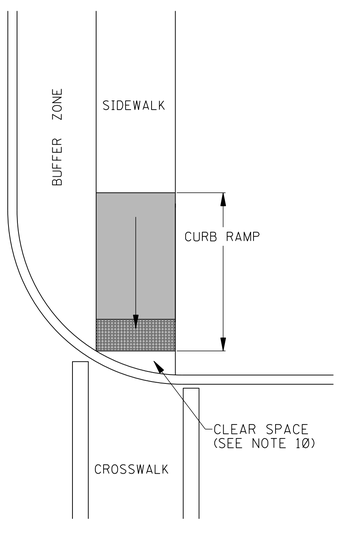


CURB RAMP CONFIGURATION: TYPE D

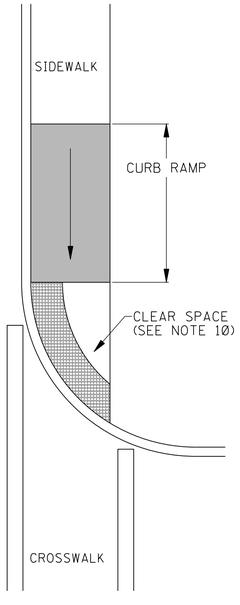


CURB RAMP CONFIGURATION: TYPE E

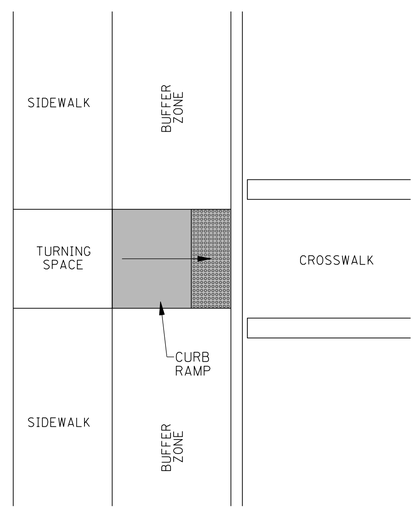


CURB RAMP CONFIGURATION: TYPE F

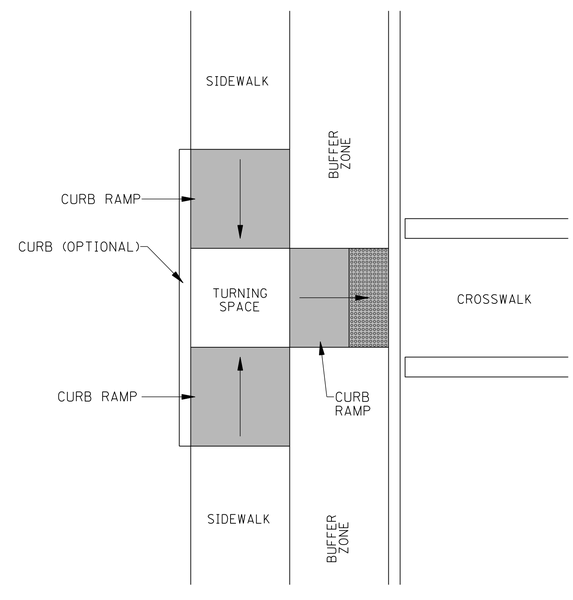


CURB RAMP CONFIGURATION: TYPE G
MID BLOCK CROSSING

THE CURB BEHIND THE TURNING SPACE AND RAMPS IS NOT REQUIRED, BUT IS SUGGESTED FOR RETAINING SOIL AND PROVIDING AN EDGE FOR PEDESTRIANS WITH VISUAL IMPAIRMENTS.

NOTE: SEE WK. NO. CR-4 FOR DETECTABLE WARNING DIMENSIONS AND PLACEMENT ORIENTATION.

| DATE | REVISION | BY |
|---|---|---|
| | | |

MISSISSIPPI DEPARTMENT OF TRANSPORTATION
ROADWAY DESIGN DIVISION
STANDARD PLAN

**CURB RAMPS PLACEMENT DETAILS**

MDOT MISSISSIPPI DEPARTMENT OF TRANSPORTATION

WORKING NUMBER CR-2

ISSUE DATE: AUGUST 01, 2017

SHEET NUMBER 6422

| STATE | PROJECT NO. |
|---|---|
| MISS. | |

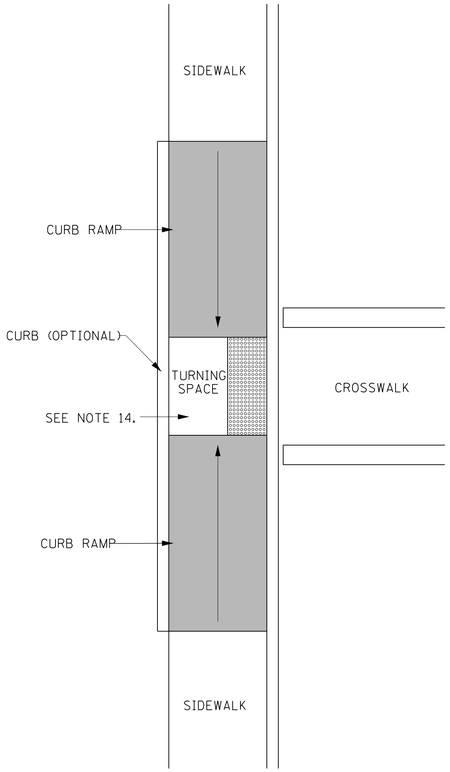


CURB RAMP CONFIGURATION: TYPE H

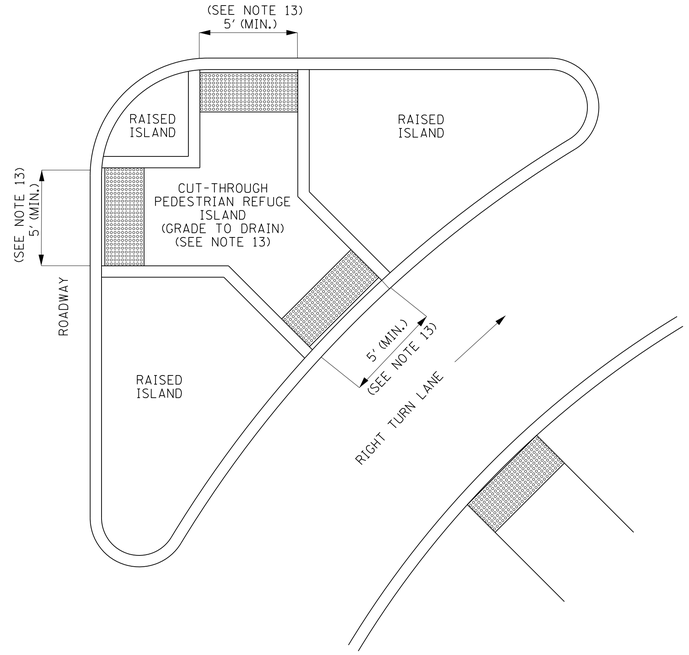


CURB RAMP CONFIGURATION: TYPE I
RIGHT TURN ISLAND CUT THROUGH

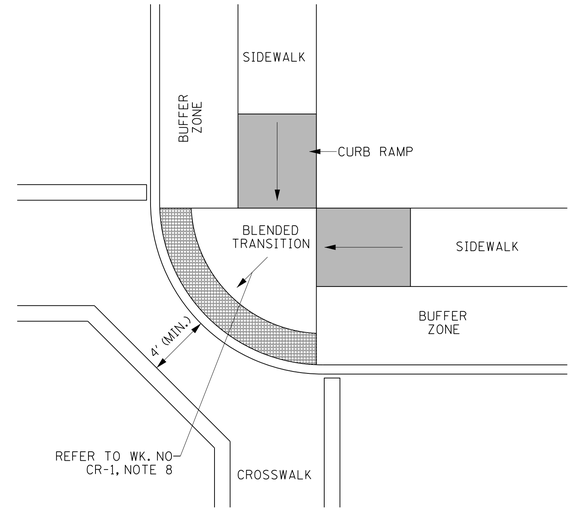


CURB RAMP CONFIGURATION: TYPE J
NOT RECOMMENDED

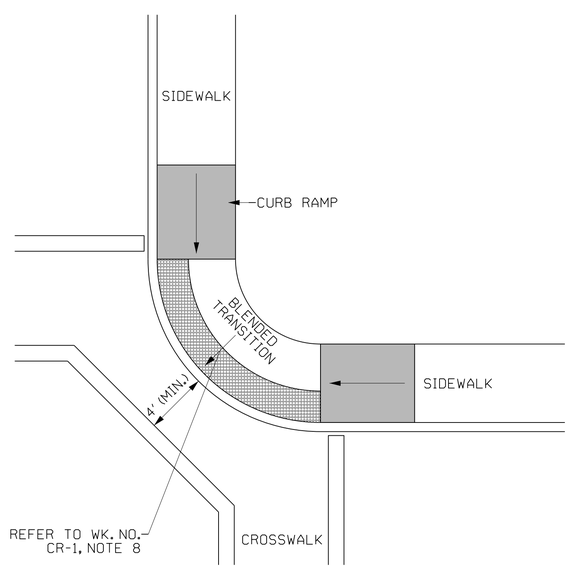


CURB RAMP CONFIGURATION: TYPE K
NOT RECOMMENDED

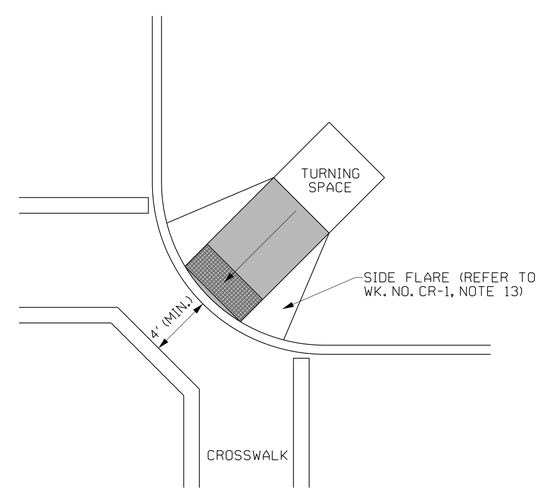


CURB RAMP CONFIGURATION: TYPE L
NOT RECOMMENDED
REFER TO NOTE 6

GENERAL NOTES:

1. FOR DIMENSIONS & GEOMETRIC VALUES REFER TO WK. NO. CR-1.
2. THE CONFIGURATIONS SHOWN GENERICALLY REPRESENT THE MOST COMMON SITUATIONS ENCOUNTERED. THEY ARE INTENDED TO PRESENT CURB RAMP DESIGN CONCEPTS. SITE CONDITIONS AT INDIVIDUAL LOCATIONS REQUIRE SPECIFIC DESIGNS. CURB RAMP DESIGNS MUST BE CONSISTENT WITH THE PROVISIONS OF WK. NOS. CR-1, CR-2, CR-3 AND CR-4.
3. COORDINATE TRAFFIC CONTROL DEVICES, UTILITY LOCATIONS, SIGNS, STREET FURNITURE AND DRAINAGE TO ENSURE A CONTINUOUS PEDESTRIAN ACCESS ROUTE AT ALL CURB RAMP LOCATIONS. GUIDANCE FOR CROSSWALK MARKINGS AND TRAFFIC CONTROL DEVICES IS PROVIDED IN THE MUTCD.
4. DETECTABLE WARNINGS SHOWN ON THIS SHEET ARE FOR ILLUSTRATION ONLY. FOR SPECIFIC PLACEMENT ORIENTATIONS AND DIMENSIONS REFER TO WK. NO. CR-4.
5. THE CROSS SLOPE OF CURB RAMPS, BLENDED TRANSITIONS, AND TURNING SPACES SHALL BE 2% MAXIMUM (1.5% PREFERRED). AT PEDESTRIAN STREET CROSSINGS WITHOUT YIELD OR STOP CONTROL AND AT MIDBLOCK PEDESTRIAN STREET CROSSINGS, THE CROSS SLOPE SHALL BE PERMITTED TO EQUAL THE STREET OR HIGHWAY GRADE.
6. DIAGONAL CURB RAMPS ARE UNACCEPTABLE IN NEW CONSTRUCTION. THEY MAY BE USED FOR ALTERATIONS ONLY IF IT IS THE ONLY OPTION THAT WILL WORK.
7. GRATES SHALL NOT BE LOCATED ON CURB RAMPS, BLENDED TRANSITIONS, TURNING SPACES, OR LANDINGS. ACCESS COVERS OF SIMILAR SURFACES SHALL COMPLY WITH APPLICABLE SURFACE REQUIREMENTS.
8. UTILITIES, SIGNS, AND OTHER FIXED OBJECTS SHALL NOT BE PLACED ON A CURB RAMP, PEDESTRIAN ACCESS ROUTE, OR IN A MANNER THAT INTERFERES WITH THE USE OF THE CURB RAMP.
9. THE SURFACE OF ALL CURB RAMPS SHALL BE STABLE, FIRM, AND SLIP RESISTANT. A COARSE BROOM FINISH RUNNING PERPENDICULAR TO THE SLOPE IS RECOMMENDED ON CONCRETE RAMP SURFACES, EXCLUSIVE OF THE DETECTABLE WARNING FIELDS.
10. THERE SHALL BE A CLEAR SPACE AT THE BOTTOM OF THE ALTERNATE PERPENDICULAR RETURNED CURB RAMP. IT SHALL SLOPE TO DRAIN RUNOFF TO STREET/GUTTER AND HAVE A MAXIMUM SLOPE OF 2% (1.5% PREFERRED).
11. TURNING SPACES MAY OVERLAP WITH ADJACENT TURNING SPACES OR A SINGLE TURNING SPACE MAY SERVE MULTIPLE CURB RAMPS.
12. TURNING SPACES MAY OVERLAP WITH THE CLEAR GROUND SPACE REQUIRED AT PEDESTRIAN SIGNAL PUSH BUTTONS.
13. THE CLEAR WIDTH OF PEDESTRIAN ACCESS ROUTES WITHIN MEDIANS AND PEDESTRIAN REFUGE ISLANDS SHALL BE 5' MINIMUM.
14. BEYOND THE BOTTOM GRADE BREAK, A TURNING SPACE OF 4' MINIMUM BY 4' MINIMUM SHALL BE PROVIDED WITHIN THE WIDTH OF THE PEDESTRIAN STREET CROSSING AND WHOLLY OUTSIDE THE PARALLEL VEHICLE TRAVEL LANE.

NOTE: SEE WK. NO. CR-4 FOR DETECTABLE WARNING DIMENSIONS AND PLACEMENT ORIENTATION.

| DATE | REVISION | BY |
|---|---|---|
| | | |

MISSISSIPPI DEPARTMENT OF TRANSPORTATION
ROADWAY DESIGN DIVISION
STANDARD PLAN

**CURB RAMPS PLACEMENT DETAILS**

MDOT MISSISSIPPI DEPARTMENT OF TRANSPORTATION

WORKING NUMBER CR-3

ISSUE DATE: AUGUST 01, 2017

SHEET NUMBER 6423

FMS CONUPDATE

| STATE | PROJECT NO. |
|---|---|
| MISS. | |

## DETAIL OF TYPICAL TRAFFIC SIGNAL HEADS

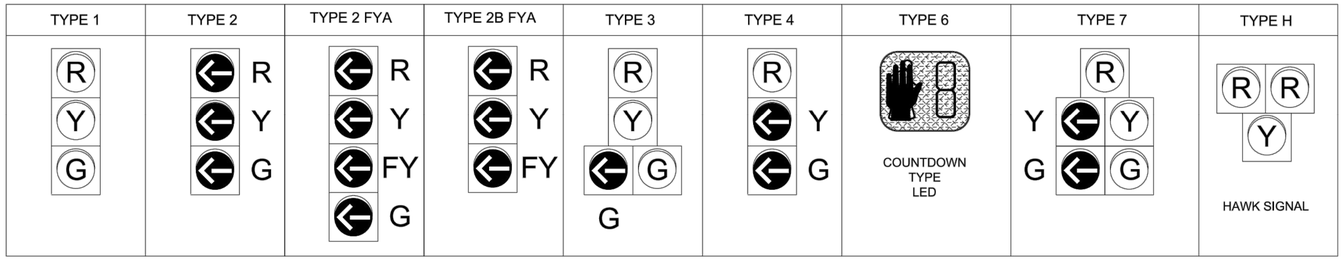


NOTES:

1. ALL SIGNAL HEADS SHALL BE BLACK IN COLOR UNLESS OTHERWISE NOTED ON THE PLANS.
2. ALL SIGNAL HEADS SHALL BE L.E.D. LENSES UNLESS OTHERWISE NOTED ON THE PLANS. TYPE "A" SIGNAL HEAD IS TO BE GEOMETRICALLY PROGRAMMED VIA LOUVERS.
3. LETTER "R" ON HEAD TYPES MEANS RIGHT TURN ARROW(S).
4. TYPE 6 SIGNAL HEAD SYMBOLS/NUMBERS SHALL BE FULLY ILLUMINATED (NO OUTLINE SYMBOLS ALLOWED). THERE IS A SEPARATE PAY ITEM FOR PEDESTRIAN PUSHBUTTON. PEDESTRIAN PUSHBUTTON SHALL BE FURNISHED WITH R10-3e SIGN. (COST ABSORBED).
5. ALL FYA SIGNAL HEAD SHALL BE FURNISHED WITH R10-12M SIGN. WHEN NOTED ON PLANS, TYPE 4 & 5 SIGNAL HEADS SHALL BE FURNISHED WITH R10-10L , R10-10R, OR R10-17M SIGN. TYPE 7 SIGNAL HEAD SHALL BE FURNISHED WITH R10-12 SIGN. TYPE 7 R REQUIRES NO SIGN. TYPE H SIGNAL HEAD SHALL BE FURNISHED WITH R10-23 SIGN WHEN INDICATED ON PLANS. COST OF SIGNAL SIGNS, MOUNTING BRACKETS, HARDWARE, AND LABOR SHALL BE COST ABSORBED.
6. FOR SPAN WIRE INSTALLATION, THE HOUSING FOR THE RED INDICATION OF A TYPE 7 HEAD, SHALL BE ALUMINUM.

## DETAIL OF TRAFFIC SIGNAL WITH BACKPLATE

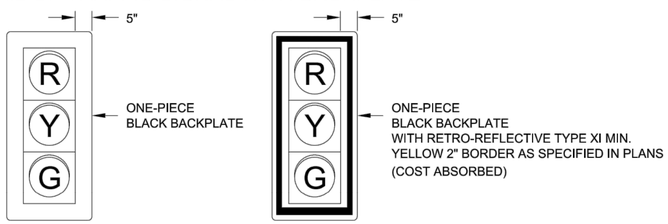


NOTE:
ALL SIGNAL HEADS SHALL INCLUDE BACKPLATES AND VISORS UNLESS OTHERWISE NOTED ON TRAFFIC SIGNAL INSTALLATION SHEETS.

## DETAIL OF TYPICAL TRAFFIC SIGNAL SIGNS

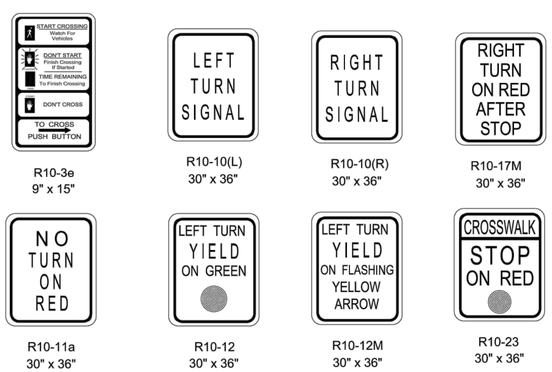


NOTES:

1. ALUMINUM SIGN BLANKS ARE TO BE ALUMINUM ALLOY 5052-H38 AND 0.10" THICK.
2. THE SIGNS SHALL BE SUPPLIED WITH MOUNTING BRACKETS AND HARDWARE AS REQUIRED.
3. NUMBER 12 PLATED JACK CHAINS SHALL BE ATTACHED TO THE BOTTOM OF ALL SPAN WIRE MOUNTED SIGNS.
4. CHAINS SHALL BE ATTACHED TO SIGN AND TETHER USING "S" HOOKS.
5. THE SIZE OF THE SIGN BLANK, LEGEND, BORDER AND THE COLOR OF THE BACKGROUND AND LEGEND IS TO CONFORM TO THE M.U.T.C.D. (LATEST EDITION).
6. REFLECTIVE SHEETING FOR TRAFFIC SIGNS SHALL BE TYPE XI PRISMATIC RETROREFLECTIVE SHEETING.

## SIGNAL PLAN LEGEND

| | |
|---|---|
| 1 | SIGNAL HEAD REQUIRED / TYPE |
| 6 | PEDESTRAIN HEAD REQUIRED |
| | EXISTING SIGNAL HEAD |
| | SIGN |
| | VEHICLE LOOP DETECTOR |
| OR | QUADRAPOLE VEHICLE LOOP DETECTOR |
| 1 | VEHICLE LOOP DETECTOR NUMBER |
| M | WIRELESS MAGNETOMETER SENSOR |
| | BASE MOUNTED CABINET FOR SIGNAL CONTROLLER |
| | POLE MOUNTED CABINET FOR SIGNAL CONTROLLER |
| | EXISTING POLE |
| | POLE REQUIRED |
| | NEW PEDESTAL POLE |
| | MAST ARM POLE REQUIRED |
| | EXISTING PULLBOX |
| 2 OR | PULLBOX REQUIRED (TYPE SPECIFIED ON PLAN SHEETS) |
| | RADAR DETECTOR (RD) |
| | VIDEO DETECTOR (VD) |
| | MULTI SENSOR DETECTOR (MS) |
| | OPTICAL DETECTOR UNIT |
| | CONDUIT |
| | ROLL PIPE |
| | LUMINAIRE |
| | DECORATIVE LUMINAIRE |
| | GROUND MOUNTED PEDESTAL SERVICE PANEL |
| | RADIO INTERCONNECT ANTENNA |
| | TWO-WAY WIRELESS ANTENNA |
| | WIRELESS REPEATER |
| CCTV | PTZ / FIXED CAMERA |
| P.B. | PUSH BUTTON |
| S.C. | SHIELDED CABLE |
| POW | POWER CABLE |
| LUM | LUMINAIRE POWER CABLE |
| ODC | OPTICAL DETECTOR CABLE |
| 8c | NUMBER OF CONDUCTORS |
| I.C. | INTERCONNECT CABLE |
| RAD | RADIO COMMUNICATIONS CABLE |
| FO | FIBER OPTIC CABLE (72 SM) |
| FO DROP | FIBER DROP CABLE (12 SM) |
| DC | DETECTION CABLE |
| 5 | STOP BAR DETECTION ZONE |
| 2 | ADVANCED DETECTION ZONE |

## WIND SPEEDS AND ICING REGION MAP

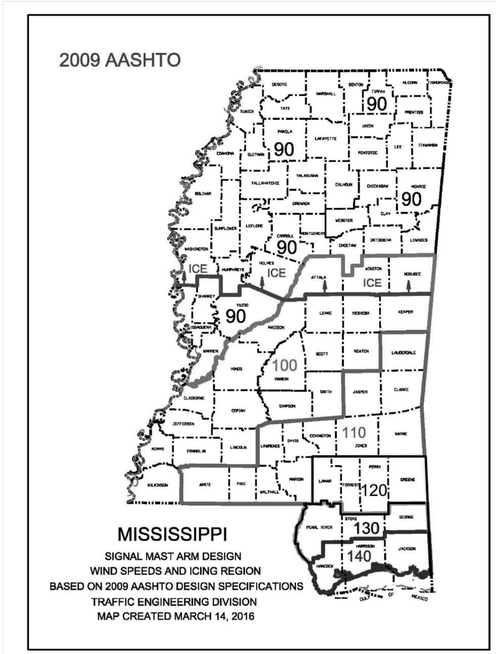


## 2009/2013 AASHTO WIND LOAD LIST BY COUNTY

| COUNTY | BASIC WIND SPEED MPH | ICE LOADING REQD |
|---|---|---|
| Adams | 100 | NO |
| Alcorn | 90 | YES |
| Amite | 110 | NO |
| Attala | 100 | YES |
| Benton | 90 | YES |
| Bolivar | 90 | YES |
| Calhoun | 90 | YES |
| Carroll | 90 | YES |
| Chickasaw | 90 | YES |
| Choctaw | 90 | YES |
| Claiborne | 100 | NO |
| Clarke | 110 | NO |
| Clay | 90 | YES |
| Coahoma | 90 | YES |
| Copiah | 90 | NO |
| Covington | 110 | NO |
| DeSoto | 90 | YES |
| Forrest | 120 | NO |
| Franklin | 100 | NO |
| George | 130 | NO |
| Greene | 120 | NO |
| Grenada | 90 | YES |
| Hancock | 140 | NO |
| Harrison | 140 | NO |
| Hinds | 100 | NO |
| Holmes | 90 | YES |
| Humphreys | 90 | YES |
| Issaquena | 90 | NO |
| Itawamba | 90 | YES |
| Jackson | 140 | NO |
| Jasper | 110 | NO |
| Jefferson | 100 | NO |
| Jefferson Davis | 110 | NO |
| Jones | 110 | NO |
| Kemper | 100 | NO |
| Lafayette | 90 | YES |
| Lamar | 120 | NO |
| Lauderdale | 110 | NO |
| Lawrence | 110 | NO |
| Leake | 100 | NO |
| Lee | 90 | YES |
| Leflore | 90 | YES |
| Lincoln | 100 | NO |
| Lowndes | 90 | YES |
| Madison | 100 | NO |
| Marion | 110 | NO |
| Marshall | 90 | YES |
| Monroe | 90 | YES |
| Montgomery | 90 | YES |
| Neshoba | 100 | NO |
| Newton | 100 | NO |
| Noxubee | 100 | YES |
| Oktibbeha | 90 | YES |
| Panola | 90 | YES |
| Pearl River | 130 | NO |
| Perry | 120 | NO |
| Pike | 110 | NO |
| Pontotoc | 90 | YES |
| Prentiss | 90 | YES |
| Quitman | 90 | YES |
| Rankin | 100 | NO |
| Scott | 100 | NO |
| Sharkey | 90 | NO |
| Simpson | 100 | NO |
| Smith | 100 | NO |
| Stone | 130 | NO |
| Sunflower | 90 | YES |
| Tallahatchie | 90 | YES |
| Tate | 90 | YES |
| Tippah | 90 | YES |
| Tishomingo | 90 | YES |
| Tunica | 90 | YES |
| Union | 90 | YES |
| Walthall | 110 | NO |
| Warren | 90 | NO |
| Washington | 90 | YES |
| Wayne | 110 | NO |
| Webster | 90 | YES |
| Wilkinson | 100 | NO |
| Winston | 100 | YES |
| Yalobusha | 90 | YES |
| Yazoo | 90 | NO |

MISSISSIPPI DEPARTMENT OF TRANSPORTATION

TRAFFIC SIGNAL HEADS, TRAFFIC SIGNAL SIGNS AND WIND SPEEDS

PROJ. NO.:
COUNTY:

PRELIMINARY NOT FOR CONSTRUCTION

WORKING NUMBER TSD-2

SHEET NUMBER [redacted]

REVISION | BY | DATE

FILENAME: Final TSDs 3.6.2019.dgn
DESIGN TEAM _____ CHECKED _____ DATE 2019-03-06

SHEET NUMBER 6590

ROADWAY DESIGN DIVISION
MISSISSIPPI DEPARTMENT OF TRANSPORTATION
PLAN

MKOOYY 02:00AMPM DGNFILENAME

FMS CONUPDATE

| STATE | PROJECT NO. |
|---|---|
| MISS. | |

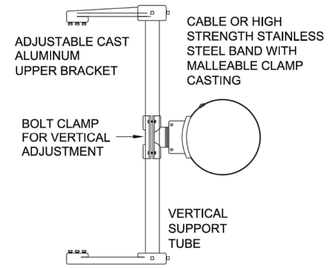


SIGNAL MOUNTING BRACKET
(TYPICAL)

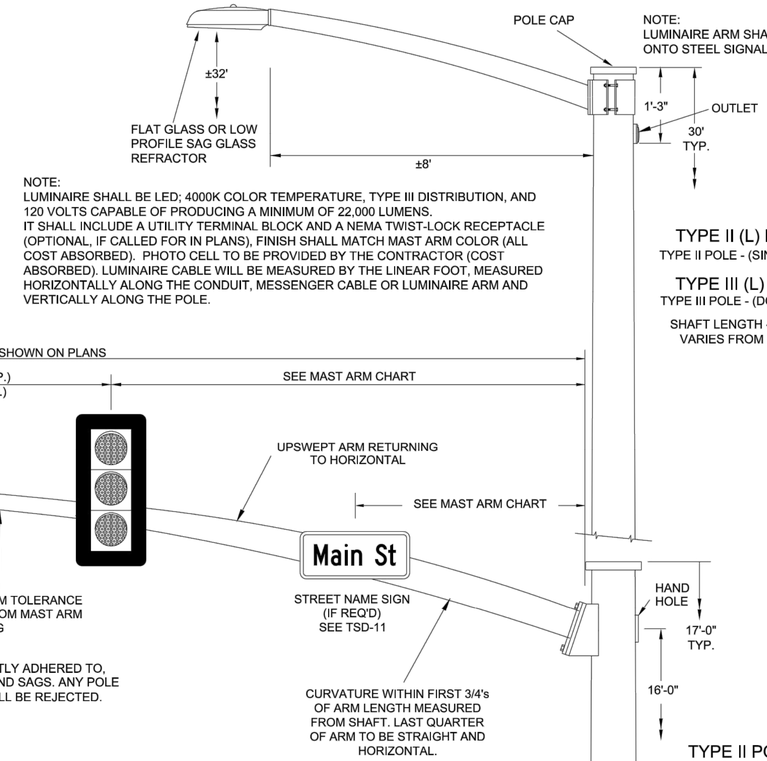


NOTE:
LUMINAIRE SHALL BE LED; 4000K COLOR TEMPERATURE, TYPE III DISTRIBUTION, AND 120 VOLTS CAPABLE OF PRODUCING A MINIMUM OF 22,000 LUMENS.
IT SHALL INCLUDE A UTILITY TERMINAL BLOCK AND A NEMA TWIST-LOCK RECEPTACLE (OPTIONAL, IF CALLED FOR IN PLANS), FINISH SHALL MATCH MAST ARM COLOR (ALL COST ABSORBED). PHOTO CELL TO BE PROVIDED BY THE CONTRACTOR (COST ABSORBED). LUMINAIRE CABLE WILL BE MEASURED BY THE LINEAR FOOT, MEASURED HORIZONTALLY ALONG THE CONDUIT, MESSENGER CABLE OR LUMINAIRE ARM AND VERTICALLY ALONG THE POLE.

TYPE II (L) POLE
TYPE II POLE - (SINGLE ARM)

TYPE III (L) POLE
TYPE III POLE - (DOUBLE ARM)

SHAFT LENGTH - 30' TYP.
VARIES FROM 30' - 40'

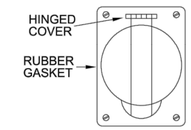


OUTLET BOX WITH SINGLE 15 AMP - 125 VOLT POLARIZED RECEPTACLE (GROUNDING TYPE)

OUTLET DETAIL
OPTIONAL
(IF CALLED FOR IN PLANS)

NOTES:

1. WIRE ENTRANCE TO MAST ARM WILL BE FIELD DRILLED TO CORRESPOND TO THE LOCATION OF THE SIGNAL HEADS WHEN ALIGNED IN FIELD.
2. RED SECTION INDICATIONS OF SIGNAL HEADS TO BE APPROXIMATELY SAME HEIGHT.
3. EXACT DIMENSIONS AND LOCATIONS OF ANCHOR BOLTS TO BE SUPPLIED BY THE POLE MANUFACTURER.
4. THE CONTRACTOR SHALL PROVIDE MAST ARM POLE DESIGN CERTIFICATION AND CALCULATIONS AS OUTLINED IN SECTION 722.02 OF STANDARD SPECIFICATIONS. DESIGN STANDARD FOR MAST ARM POLES SHALL BE 2013 AASHTO STANDARD SPECIFICATIONS FOR STRUCTURAL SUPPORTS FOR HIGHWAY SIGNS, LUMINAIRES AND TRAFFIC SIGNALS. USE FATIGUE CATEGORY II. DO NOT CONSIDER GALLOPING OR TRUCK FORCES. USE 50 YEAR DESIGN LIFE. WIND AND ICE LOADS VARIABLE BASED UPON MAPS IN THE 2013 AASHTO SPECIFICATION. USE UPSWEPT MAST ARMS.
5. #6 COPPER GROUND WIRE INSIDE POLE AND MAST ARM TO BE COST ABSORBED.




NOTE:
DIMENSIONS ON MAST ARM TO BE STRICTLY ADHERED TO, INCLUDING HORIZONTAL TOLERANCES AND SAGS. ANY POLE FAILING TO MEET THESE DIMENSIONS WILL BE REJECTED.

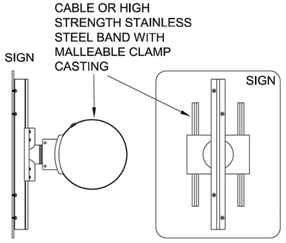


MAST ARM SIGN BRACKET
(TYPICAL)

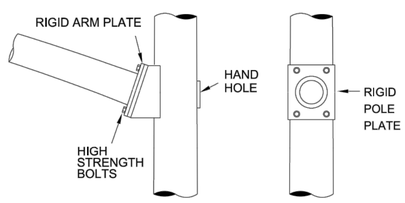


MAST ARM ATTACHMENT DETAIL

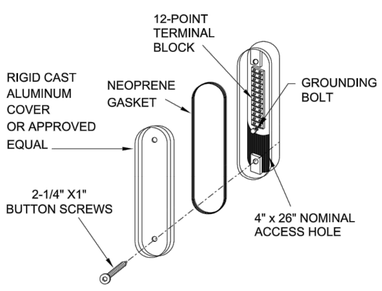


HANDHOLE WITH TERMINAL BLOCK DETAIL

NOTE:
HANDHOLE TO BE ORIENTED AWAY FROM ON COMING TRAFFIC AND NOT ON THE SAME SIDE AS PED PUSHBUTTON IF POSSIBLE.

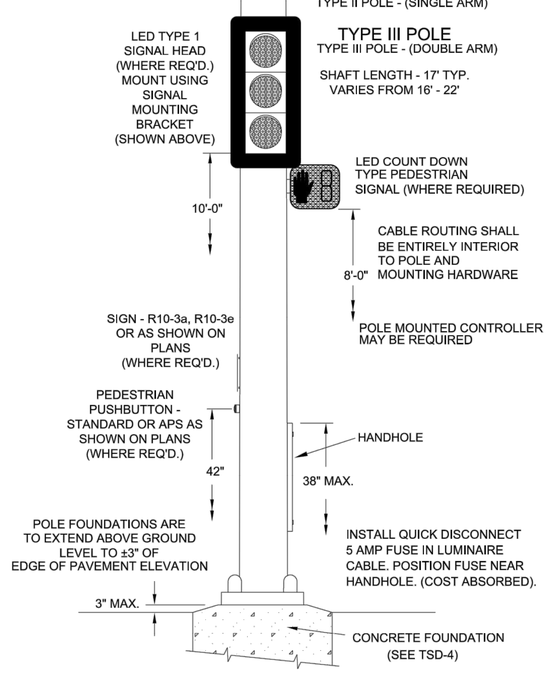


STEEL MAST ARM POLE DETAIL
NOT TO SCALE

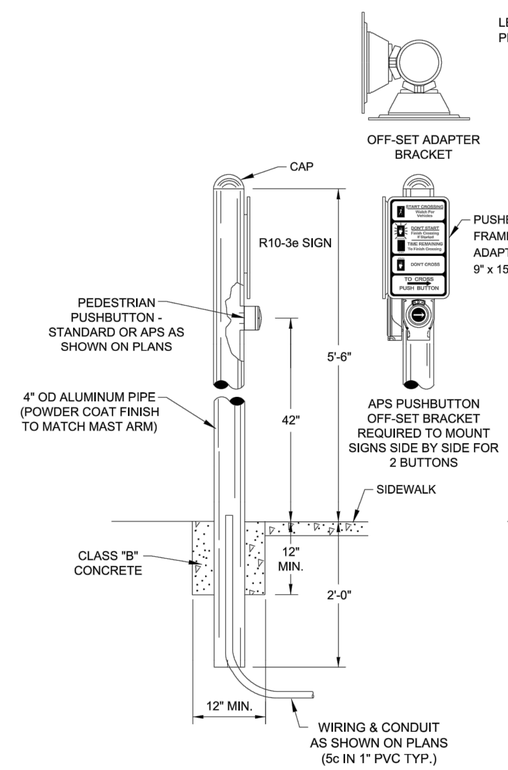


PEDESTRIAN PUSHBUTTON POLE DETAIL
NOT TO SCALE

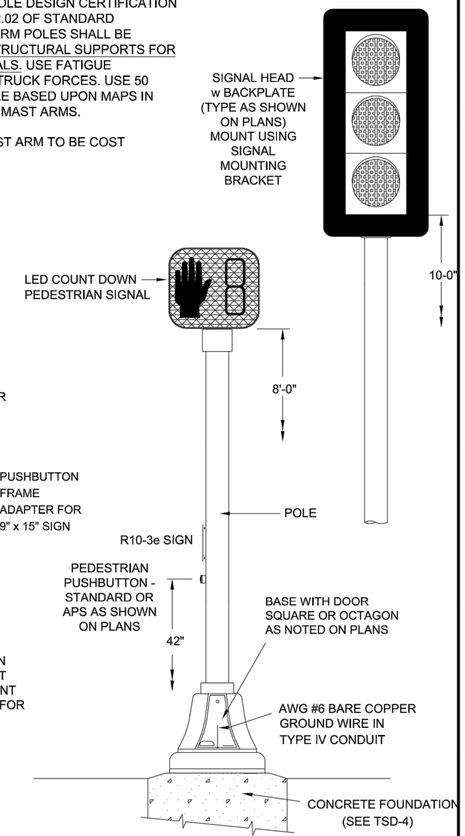


PEDESTAL POLE DETAIL
NOT TO SCALE

TYPE V POLE
(TRAFFIC SIGNAL)

TYPE VI POLE
(PEDESTRIAN SIGNAL)

| REVISION | BY | DATE |
|---|---|---|
| | | |

MISSISSIPPI DEPARTMENT OF TRANSPORTATION

CURVED MAST ARM AND PEDESTAL POLE DETAILS

PROJ. NO.:
COUNTY:

PRELIMINARY
NOT FOR CONSTRUCTION

WORKING NUMBER
TSD-3C

SHEET NUMBER
[redacted]

FILENAME: Final TSDs 3.6.2019.dgn
DESIGN TEAM _____ CHECKED _____ DATE 2019-03-06

SHEET NUMBER 6591

PLAN
ROADWAY DESIGN DIVISION
MISSISSIPPI DEPARTMENT OF TRANSPORTATION

MKODYY 02:02AMPM DGNFILENAME

FMS CONUPDATE

| STATE | PROJECT NO. |
|---|---|
| MISS. | |

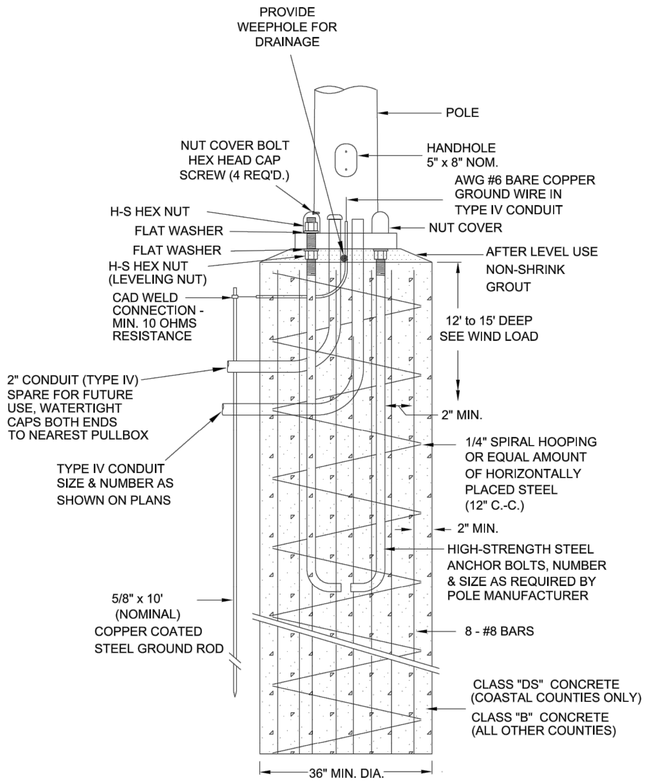


## TYPE I POLE FOUNDATION DETAIL

NOT TO SCALE

WIND SPEED DETERMINES SHAFT DIAMETER AND DEPTH:

### FOUNDATION CHART

| WIND SPEED | POLE TYPE | DIA. (IN.) | DEPTH (FT.) | CONCRETE | SLIP CASING |
|---|---|---|---|---|---|
| 90 MPH | I | 36" | 12' | B | NO |
| 100 - 130 MPH | I | 36" | 15' | B | NO |
| 140 MPH | I | 36" | 15' | DS | YES |

*SEE WIND SPEED MAP IN 2013 AASHTO GUIDELINES ON TSD-2.

TYPE II POLE
TYPE II POLE - (SINGLE ARM)

TYPE III POLE
TYPE III POLE - (DOUBLE ARM)

SHAFT LENGTH - 17' TYP. VARIES FROM 16' - 22'

TYPE II (L) POLE
TYPE II POLE - (SINGLE ARM)

TYPE III (L) POLE
TYPE III POLE - (DOUBLE ARM)

SHAFT LENGTH - 30' TYP. VARIES FROM 30' - 40'

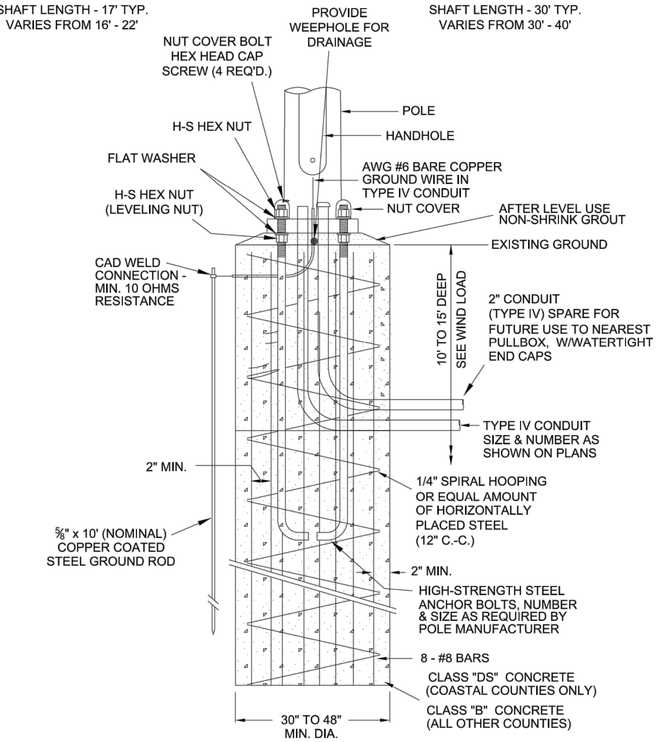


## STEEL MAST ARM POLE FOUNDATION DETAIL

NOT TO SCALE

WIND SPEED DETERMINES SHAFT DIAMETER AND DEPTH:

### FOUNDATION CHART

| WIND SPEED | POLE TYPE | ARM LENGTH | DIA. (IN.) | DEPTH (FT.) | CONCRETE | SLIP CASING |
|---|---|---|---|---|---|---|
| 90 MPH | II, II (L) | 5' - 45' | 30" | 10' | B | NO |
| 90 MPH | II, II (L) | 50' - 80' | 36" | 12' | B | NO |
| 90 MPH | III, III (L) | 5' - 80' | 36" | 15' | B | NO |
| 90 MPH | II, II (L), III, III (L) | 85' & OVER | 48" | 15' | B | NO |
| 100 - 130 MPH | II, II (L), III, III (L) | 5' - 80' | 36" | 15' | B | NO |
| 100 - 130 MPH | II, II (L), III, III (L) | 85' & OVER | 48" | 15' | B | NO |
| 140 MPH | II, II (L), III, III (L) | 5' - 80' | 36" | 15' | DS | YES |
| 140 MPH | II, II (L), III, III (L) | 85' & OVER | 48" | 15' | DS | YES |

*SEE WIND SPEED MAP IN 2013 AASHTO GUIDELINES ON TSD-2.

TYPE V POLE
(TRAFFIC SIGNAL)

TYPE VI POLE
(PEDESTRIAN SIGNAL)

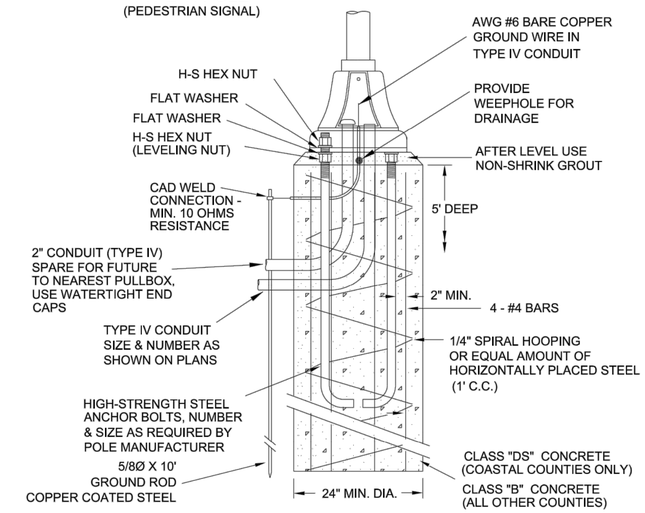


## PEDESTAL POLE FOUNDATION DETAIL

NOT TO SCALE

### FOUNDATION CHART

| WIND SPEED | POLE TYPE | DIA. (IN.) | DEPTH (FT.) | CONCRETE | SLIP CASING |
|---|---|---|---|---|---|
| 90 -130 MPH | V, VI | 24" | 5' | B | NO |
| 140 MPH | V, VI | 24" | 5' | DS | NO |

*SEE WIND SPEED MAP IN 2013 AASHTO GUIDELINES ON TSD-2.

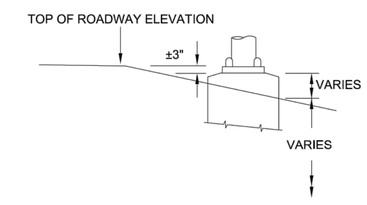


## LOW SHOULDER FOUNDATION DETAIL

NOT TO SCALE

## FOUNDATION GENERAL NOTES

1. THE CONTRACTOR SHALL STAKE THE LOCATION OF EACH POLE FOUNDATION AND NOTIFY THE PROJECT ENGINEER FOR CONCURRENCE IN THE LOCATION BEFORE PROCEEDING WITH THE PURCHASE OF THE POLE.

2. EXACT DIMENSIONS AND LOCATIONS OF ANCHOR BOLTS TO BE SUPPLIED BY THE MANUFACTURER. ANY FOUNDATIONS FAILING TO MEET MINIMUM DIMENSIONS WILL BE REJECTED.

3. DRY SHAFT EXCAVATION MUST MEET REQUIREMENTS OF SECTION 803.03.2.3.2. IF GROUNDWATER OR HOLE INSTABILITY IS ENCOUNTERED, SLIP CASING AND 10' TREMIE SHALL BE REQUIRED.

4. GROUND RODS TO BE DRIVEN UNTIL AT LEAST 12" BELOW FINISHED GROUND. SEE TRAFFIC SIGNAL GROUNDING DETAILS (TSD-5) FOR ADDITIONAL INFORMATION.

5. POLE FOUNDATIONS OF THE SIZE SPECIFIED WILL BE MEASURED BY THE CUBIC YARD, WHICH MEASUREMENT SHALL BE THE AREA BOUNDED BY THE VERTICAL PLANES OF THE NEAT LINES OF THE FOUNDATION. FIELD CONDITIONS MAY REQUIRE TALLER FOUNDATIONS THAN SPECIFIED IN THE PLANS IN WHICH THE CONTRACTOR SHALL BE PAID FOR ADDITIONAL CONCRETE PER CUBIC YARD AS BID IN THE POLE FOUNDATIONS PAY ITEM. WHERE TALLER FOUNDATIONS ARE USED, SUPPORTING STEEL SHALL EXTEND THE FULL DEPTH OF THE FOUNDATION.

6. THE FINISHED TOP SURFACE OF EACH FOUNDATION SHALL BE ±3 INCHES FROM THE PAVEMENT EDGE ELEVATION AT THE FOUNDATION LOCATION. WHERE FOUNDATIONS ARE CONSTRUCTED IN AREAS WHERE THE PAVEMENT EDGE ELEVATION AND SHOULDER EDGE ELEVATION DIFFER MORE THAN TWELVE (12) INCHES, TALLER FOUNDATIONS MAY BE USED BUT MUST BE APPROVED BY THE ENGINEER. TALLER POLES SHOULD BE EVALUATED TO MINIMIZE EXPOSED FOUNDATION.

7. WHEN POLES ARE SET WITHIN OR ON EDGE OF SIDEWALK, POLES SHALL BE AS FLUSH AS POSSIBLE WITH SIDEWALK GRADE. THE FOOTPRINT OF THE NON-SHRINK GROUT PAD MAY BE REDUCED IN SIZE TO PROVIDE ADEQUATE CLEARANCE FOR SIDEWALK AND/OR ACCESSIBILITY CONSIDERATIONS.

8. SLIP CASINGS OF THE SIZE SPECIFIED WILL BE MEASURED BY THE LINEAR FOOT FROM THE GROUND ELEVATION TO THE BOTTOM OF THE STRATA NEEDING TO BE CASED.

| REVISION | BY | DATE |
|---|---|---|
| | | |

MISSISSIPPI DEPARTMENT OF TRANSPORTATION

SIGNAL POLE AND PEDESTAL POLE FOUNDATION DETAILS

PROJ. NO.:
COUNTY:

PRELIMINARY NOT FOR CONSTRUCTION

WORKING NUMBER TSD-4

SHEET NUMBER [redacted]

FILENAME: Final TSDs 3.6.2019.dgn
DESIGN TEAM _____ CHECKED _____ DATE 2019-03-06

SHEET NUMBER 6592

PLAN
ROADWAY DESIGN DIVISION
MISSISSIPPI DEPARTMENT OF TRANSPORTATION

MMDDYY 201 00AMPM DGNFILENAME

FMS COMUPDATE

| STATE | PROJECT NO. |
|---|---|
| MISS. | |

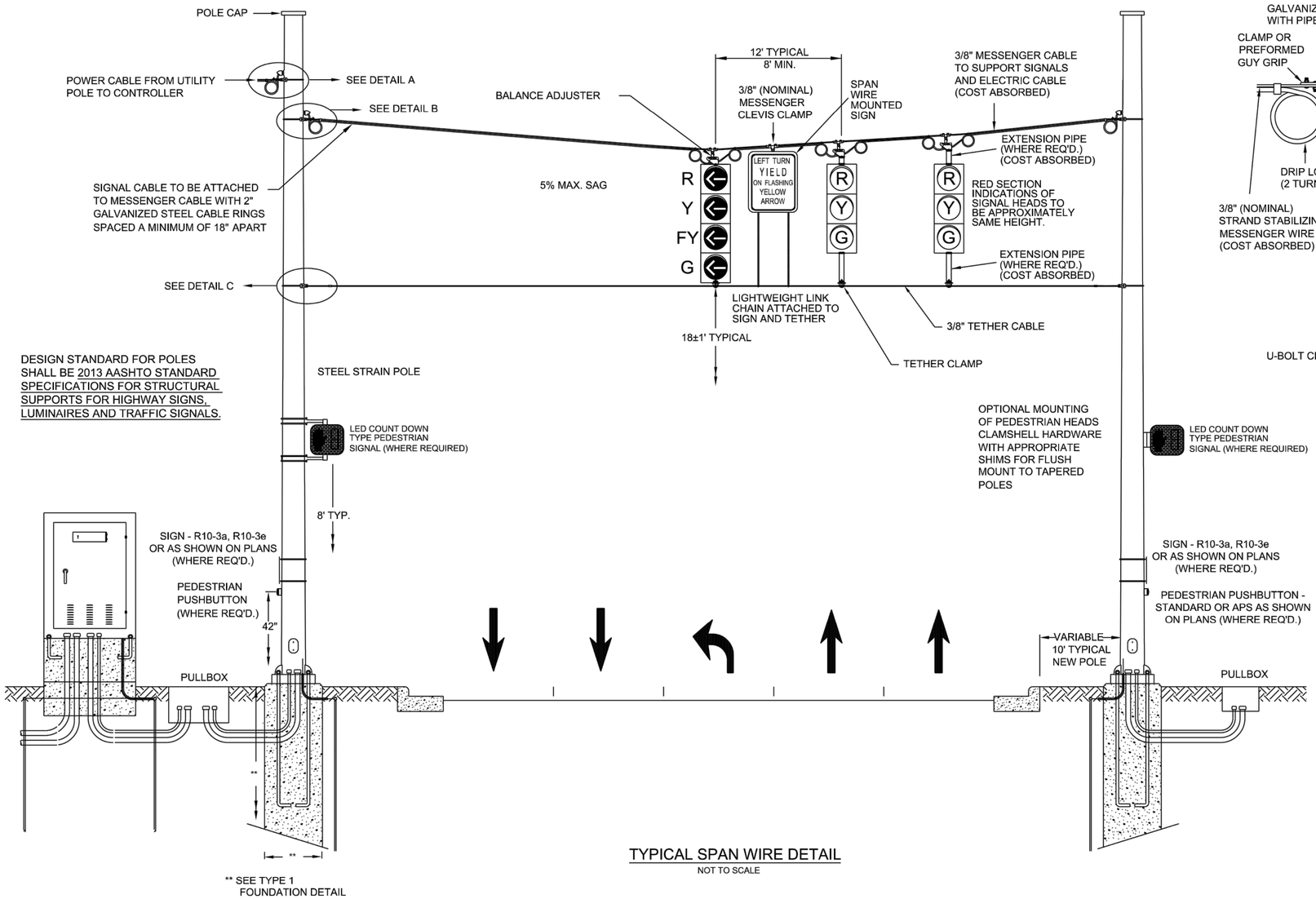


DESIGN STANDARD FOR POLES SHALL BE 2013 AASHTO STANDARD SPECIFICATIONS FOR STRUCTURAL SUPPORTS FOR HIGHWAY SIGNS, LUMINAIRES AND TRAFFIC SIGNALS.

TYPICAL SPAN WIRE DETAIL

NOT TO SCALE

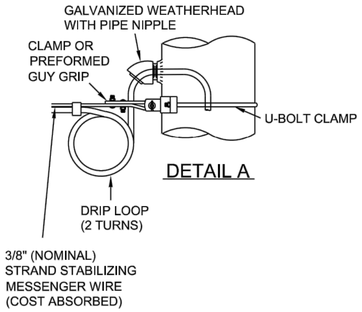


DETAIL A

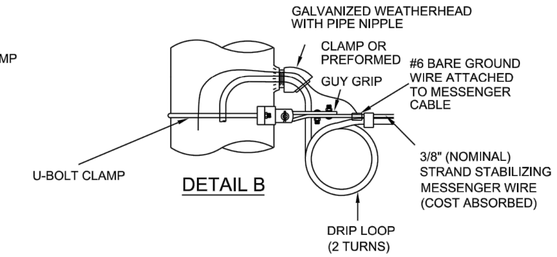


DETAIL B

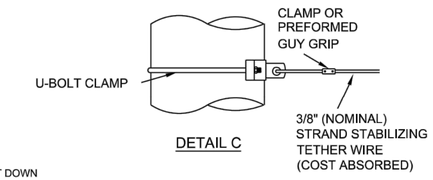


DETAIL C

MESSENGER CABLE , TETHER CABLE, AND OTHER SUPPORTING DEVICES WHERE REQUIRED SHALL BE ABSORBED IN THE PAY ITEMS FOR SIGNAL CABLE.

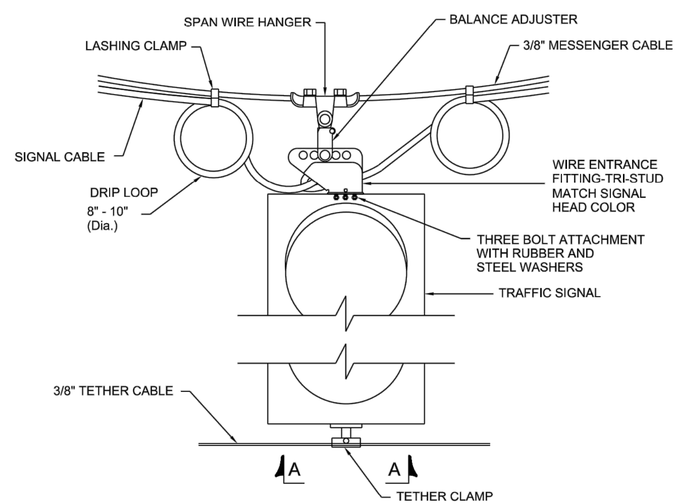


DETAIL OF SPAN WIRE ATTACHMENT FOR SIGNAL HEADS

NOT TO SCALE

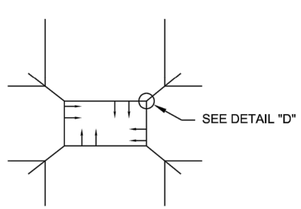


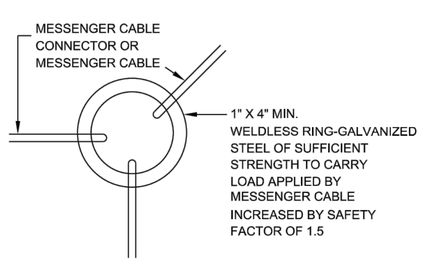


DETAIL "D"

DETAIL OF MESSENGER CABLE CONNECTION USING TENSION RING

NOT TO SCALE

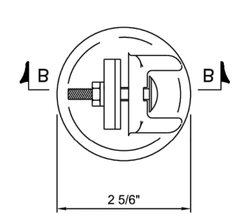


SECTION A-A

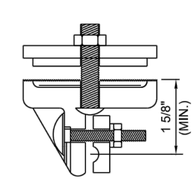


SECTION B-B

DETAIL OF SIGNAL TETHER CLAMP

NOT TO SCALE

MISSISSIPPI DEPARTMENT OF TRANSPORTATION

# SPAN WIRE DETAILS

PRELIMINARY NOT FOR CONSTRUCTION

PROJ. NO.:

COUNTY:

WORKING NUMBER TSD-12

FILENAME: Final TSDs 3.6.2019.dgn

DESIGN TEAM CHECKED DATE 2019-03-06

SHEET NUMBER

SHEET NUMBER 6591