TOWN OF LOOMIS

CONSTRUCTION STANDARDS

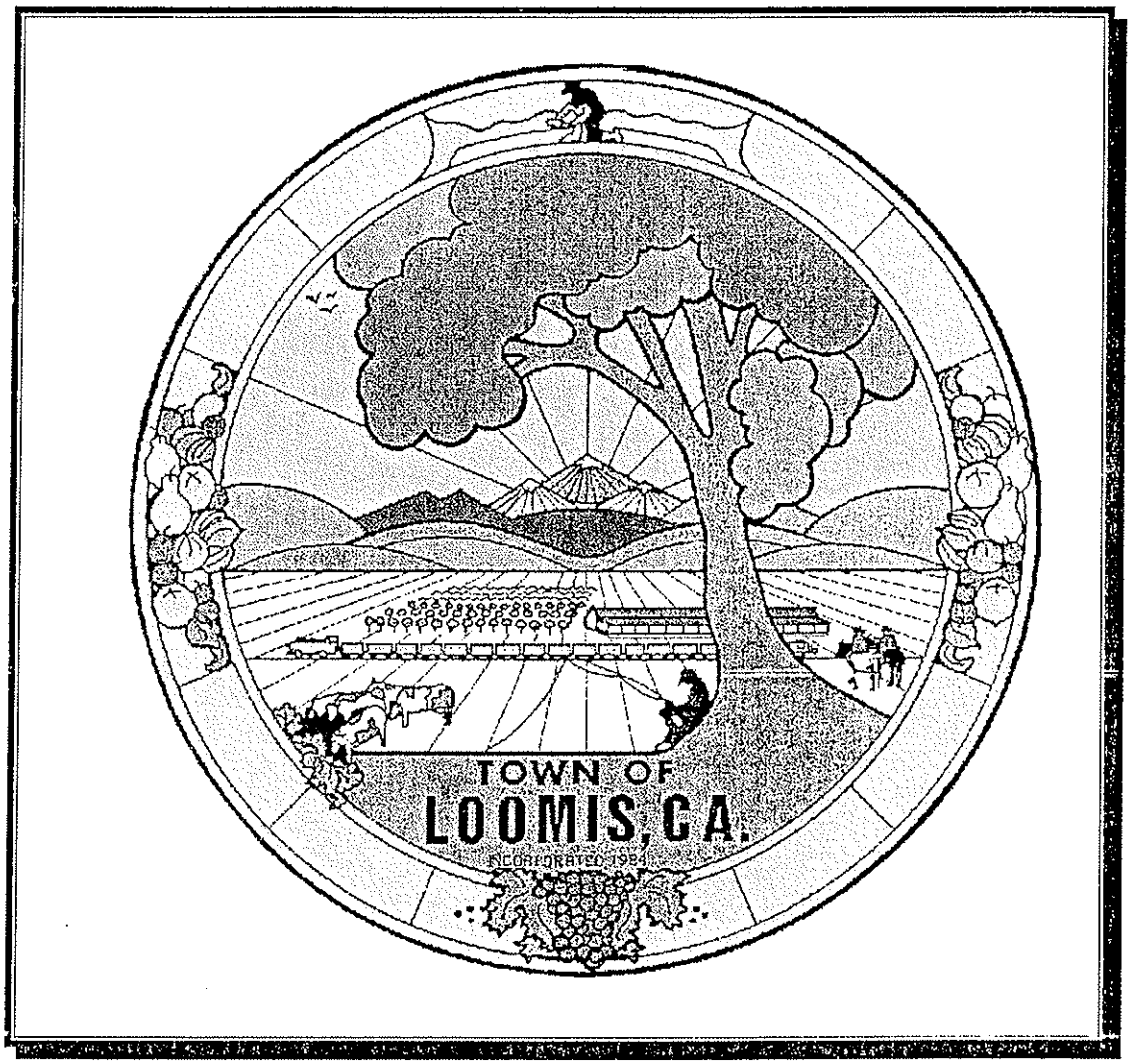

MARCH 2004
(ADOPTED BY TOWN COUNCIL JUNE 8, 2004)
RESOLUTION NO. 04-15

CONSTRUCTION STANDARDS

TABLE OF CONTENTS

ABBREVIATIONS

SECTION 1
PURPOSE AND DEFINITIONS (PD)

SECTION 2
CONTRACTOR'S AND DEVELOPER'S RESPONSIBILITIES (CD)

SECTION 3
STREETS (H)

STREETS DETAILS

SECTION 4
DOMESTIC WATER SUPPLY SYSTEM (W)

SECTION 5
SANITARY SEWER SYSTEM (SS)

SECTION 6
DRAINAGE (SD)

DRAINAGE DETAILS

SECTION 7
GRADING (G)

GRADING DETAILS

SECTION 8
LANDSCAPING & IRRIGATION (LS)

LANDSCAPING DETAILS

SECTION 9
STREET LIGHTS & SIGNALS
SIGNS, STRIPING, AND MARKINGS (SL)

STREET LIGHTING STANDARD DETAILS

ABBREVIATIONS

The following abbreviations are used within these Construction Specifications:

AASHO:	American Association of State Highway and Transportation Officials
AB:	Aggregate Base
ABS:	Acrylonitrile-Butadiene-Styrene
AC:	Asphalt Concrete and Alternating Current
ASB:	Aggregate Subbase
ANSI:	American National Standards Institute
ARV:	Air Release Valve
ASTM:	American Society for Testing and Materials
AWG:	American Wire Gauge
AWWA:	American Water Works Association
BCR:	Beginning of Curb Return
BO:	Blow Off
C & G:	Curb and Gutter
C-C:	Center to Center
C.F.:	Cubic Foot
CIP:	Cast-in-place
C/L:	Centerline
C.M.P.:	Corrugated Metal Pipe
Const.	Construction
CST:	Construction
Ctrs:	Centers
Cu. Ft.:	Cubic Feet
DET:	Detail
Dia.:	Diameter
DIP:	Ductile Iron Pipe
DLC:	Detector Lead-in Cable
DR:	Drainage
Dwg:	Drawing
EVA:	Emergency Vehicle Access
Fdn.:	Foundation
FL:	Flowline
Ga.:	Gauge
Gal.:	Gallon
Galv.:	Galvanized
GR:	Grading

Horz.:	Horizontal
Hz:	Hertz
IBOC:	Internal Battery Operated Clock
ID:	Inside Diameter
LED:	Lighted Electronic Display
LS:	Landscaping
LMA:	Luminare Mast Arm
MAS:	Mast-Arm Side mount
MAT:	Mast -Arm Top mount
Max.:	Maximum
Mil.:	Millimeter
Min.:	Minimum
M.P.:	Metal Plate
No.:	Number
O.C.:	On Center
OD:	Outside Diameter
OSHA:	Occupational Safety & Health Act
P.C.C.:	Portland Cement Concrete
PEU:	Photoelectric Unit
P.O.C.:	Point of Connection
PPB:	Pedestrian Push Button
ppm	parts per million
psi:	pounds per square inch
PVC:	Polyvinyl Chloride
PWD:	Public Works Director/Department
RCP:	Reinforced Concrete Pipe
RCV:	Remote Control Valve
Rwd.:	Redwood
R.P.:	Radius Point
R/W:	Right-of-Way
Sch.:	Schedule
SDMH:	Storm Drain Manhole
SMA:	Signal Mast Arm
SS:	Sanitary Sewer System
SSMH:	Sanitary Sewer Manhole
ST:	Street
STD:	Standard

TS:	Traffic Signals and Markings
Typ.:	Typical
UBC:	Uniform Building Code
UL:	Underwriters' Laboratory, Inc.
U.S.A.:	Underground Service Alert
VA:	Volts ampere
Var.:	Variable
VCP:	Vitrified Clay Pipe Bell and Spigot
Vert.:	Vertical
WWF:	Welded Wire Fabric
WWM:	Welded Wire Mesh

All references to specifications, standards or other publications refer to the current issue.

SECTION 1

PURPOSE AND DEFINITIONS (PD)

CONSTRUCTION
IMPROVEMENT STANDARDS

SECTION 1

PURPOSE AND DEFINITIONS

1-1 PURPOSE - The purpose of these Construction Standards is to provide minimum standards to be applied to improvements which are to be dedicated to the public and accepted by the Town for maintenance or operation and certain private works, as well as improvements to be installed within existing rights-of-way and easements. This is necessary in order to provide for coordinated development of required facilities to be used by and for the protection of the public. These Standards shall apply to, regulate, and guide preparation of traffic impact studies and the design and preparation of plans for construction of streets, alleys, drainage, traffic signals, site access, and related public improvements, and shall set guidelines for all private works which involve drainage, grading, and related improvements.

1-2 DESIGN PRACTICE - Because it is virtually impossible to anticipate all situations that may arise or to prescribe standards applicable to every situation, any items or situations not included in these Construction Standards shall be designed in accordance with accepted engineering practice, the Town of Loomis Construction Standards, the State of California "Highway Design Manual" and "Traffic Manual", and as specified by the Town Engineer.

The Town Engineer may require additional standards and/or regulations not inconsistent herewith when deemed necessary to protect the health, safety, and welfare of the public.

1-3 DEFINITIONS - Whenever the following terms or titles are used in these standards, or in any document or instrument where these standards govern, the intent and meaning shall be as herein defined:

A. **Applicant** - shall mean the same as the Developer or his consulting engineer working on his behalf.

B. **Building Division** - Shall mean the Building Division of the Town of Loomis.

C. **City/Town** - Shall mean the Town of Loomis and it's applicable Departments.

D. **Town Engineer** - Shall mean the Town Engineer/Director of Public Works of the Town of Loomis acting either directly or through the staff of the appropriate Divisions of the Department of Public Works or their authorized representatives.

E. **Consulting Engineer** - Shall mean any person or persons, firm, partnerships or corporation legally authorized to practice civil, mechanical, or electrical engineering in the State of California who prepares or submits improvement plans and specifications to the Department of Public Works of the Town of Loomis for approval.

F. **Contractor** - Shall mean any person or persons, firm, partnership, corporation, or combination thereof, licensed to perform the type of work involved, who has entered into a contract with any person, corporation or company, or his or their legal representatives, for the construction of any improvement or portions of any improvement within the Town of Loomis.

G. **Department of Public Works** - Shall mean the Department of Public Works of the Town of Loomis.

H. **Developer** - Shall mean any persons, firm, partnership, corporation, or combination thereof, financially responsible for the work involved.

I. **Development** - Shall mean the act or process of any construction on properties as well as subdivision improvement.

J. **Engineering Division** - Shall mean the Engineering Division of the Town of Loomis.

K. **Improvements** - Refers to street work, sidewalk, curb, gutter, driveways, water mains, sanitary sewer, storm drainage, street lighting, traffic signals, public utilities, landscaping, irrigation, parks, fences and other facilities to be constructed or installed by the developer within an existing or future public right of way or easement and other improvements which the Department of Public Works is responsible for performing plancheck or inspection.

L. **Laboratory** - Shall mean any testing agency or testing firm which has been approved by the Department of Public Works.

M. **Manual of Traffic Controls** - Shall mean the "Manual of Traffic Controls for Construction and Maintenance Work Zones," of the State of California, Department of Transportation, latest edition.

N. **Soils Report** - Shall mean a report as prepared by any person or persons, firm, partnership, or corporation legally licensed to prepare "Soils Reports" in the State of California.

O. **Construction Standards** - Shall mean the latest edition of the "Standard Construction Specifications" adopted by the Town of Loomis Town Council and any amendments thereto governing the construction of roads, streets, storm drainage, concrete structures, traffic signals, street lighting and other facilities within the Town of Loomis.

P. **Standard Drawings** - Shall mean the standard drawings as set forth in the Improvement Standards and included herein, approved by the Town Engineer and as amended.

Q. **State** - As used in State Specifications, shall mean the Town of Loomis.

R. **State Highway Design Manual** - Shall mean the "Highway Design Manual" of the State of California, Department of Transportation, latest edition.

S. **State Standard Plans** - Shall mean the Standard Plans of the State of California, Department of Transportation, latest edition.

T. **State Standard Specifications** - Shall mean the "Standard Specifications" of the State of California, Department of Transportation, latest edition.

U. **State Traffic Manual** - Shall mean the "Traffic Manual" of the State of California,

Department of Transportation, latest edition.

V. **Subdivision Ordinance** - Shall mean the "Subdivision Ordinance" of the Town Code as adopted by the Town Council of the Town of Loomis.

W. **Zoning Ordinance** - Shall mean the "Zoning Ordinance" of the Town Code as adopted by the Town Council of the Town of Loomis.

SECTION 2

CONTRACTOR'S AND DEVELOPER'S RESPONSIBILITIES (CD)

CONSTRUCTION
IMPROVEMENT STANDARDS

SECTION 2

CONTRACTOR'S AND DEVELOPER'S RESPONSIBILITIES

2-1 GENERAL -- All improvements within the Town of Loomis's right-of-way shall be installed in accordance with the approved improvement plans and specifications, the Town of Loomis Improvement Standards, and the State of California Department of Transportation Standard Specifications, hereinafter referred to as the Caltrans Standard Specifications. The Contractor shall follow all applicable Town, County, State and Federal laws and regulations relating to construction of the improvements.

2-2 CONTRACTOR'S RESPONSIBILITY-- It shall be the Contractor's responsibility for:

A. **Plans** -- Perform construction per plans signed and approved by all required Town of Loomis Departments. Any additions, deletions or changes to the approved plans shall be submitted to said departments for review and approval prior to construction. All plans must include all information as noted as per standard.

B. **Notification** -- The Contractor shall schedule a preconstruction meeting with the Public Works Department (PWD) and any other departments reviewing and inspecting the improvements. The meeting shall take place a minimum of 48 hours prior to the start of construction, without exception.

C. **U.S.A. Markings** -- White paint shall be used to indicate areas to be marked by Underground Service Alert (U.S.A.). Any areas not marked shall not be included in the U.S.A. and the Contractor shall not excavate in these areas. The Contractor will be responsible for any damage resulting from excavation in unmarked areas. The Contractor, or Applicant who requested the USA markings shall be responsible for the removal of the USA markings upon completion of the work, at the discretion of the Town Engineer.

D. **Testing** -- Constructed utilities shall be tested in accordance with these Improvement Standards.

E. **Cultural Resources** -- The Contractor shall stop construction if cultural resources are discovered during excavation operations. It is possible that previous activities have obscured surface evidence of cultural resources. If signs of an archeological site, such as any unusual amounts of stone, bone or shell are uncovered during grading or other construction activities, work shall be halted within 100 feet of the find and the Town Planning Department shall be notified immediately. A qualified archaeologist shall be consulted for an on-site evaluation. Additional mitigation may be required by the archaeologist.

F. **Hazardous Materials** -- Should construction operations uncover hazardous materials, or materials which the Contractor believes may be hazardous waste that is required to be removed to a Class I, Class II or Class III disposal site in accordance with provisions of existing law, the responsible Fire District, (Loomis, Penryn or South Placer) shall be contacted immediately. The area which contains the hazardous materials shall be marked off until an investigation by a member of the Fire District is conducted.

G. **Working Hours** -- In accordance with the Town of Loomis's noise ordinance, the hours of project construction shall be limited to the following:

7:00 AM to 7:00 PM	Monday through Friday
8:00 AM to 7:00 PM	Saturday
No Work	Sunday and Holidays

There may be additional limitations placed on working hours specified in the project's approved plans, conditions of approval, special provisions, or encroachment permit.

The inspection fee charged by the Town of Loomis is projected to cover all costs incurred by the Department of Public Works for construction inspection. Once the fees are exhausted, the Town of Loomis shall charge for remaining construction inspections on a time and material basis.

Any deviation to the above working hours requires approval of the Town Engineer and Planning Department.

H. **Traffic Control** -- A traffic control plan shall be submitted whenever required by the Town Engineer. Traffic control plans shall not be required, when in the opinion of the Town Engineer, the situation is adequately covered by the State of California Standard Plans, or State of California Manual of Traffic Controls for Construction and Maintenance Work Zones (latest edition), or the Work Area Traffic Control Handbook (WATCH Manual). For situations detailed in different manuals, the Standard Plans, then the Manual of Traffic Controls for Construction and Maintenance Work Zones shall take precedence. In addition to the manuals, the following measures shall apply:

1. **Start of Construction** -- Construction within Town rights-of-ways shall not start until all equipment required on the traffic control plan, the Caltrans Traffic Control Manual or the WATCH Manual, have been erected, all required permits from other agencies have been obtained and the Contractor has obtained acceptance from the Town Engineer. Parties not obtaining prior acceptance shall be subject to a stop-work order from the Town. The approved traffic control plans shall take precedence over the Standard Plans unless otherwise directed by the Engineer.

2. **Lane Changes and Closures** -- Lanes shall be closed using metal sign stands (each including all three flags), delineators or cones, or barricades, as indicated in the Caltrans Traffic Control Manual, WATCH Manual, or on the approved traffic control plan.

   A lighted arrow board may be employed as an additional lane change measure. Barricades placed in the excavation section adjacent to a traffic lane shall be placed at a maximum of 50 feet intervals. Warning signs attached to a barricade are not acceptable.

   Lane closures are permitted from 8:30 AM to 4:00 PM unless otherwise noted on the approved traffic plan, or as directed by the Town Engineer. No road shall be closed unless approved by the Town Engineer.

3. **Flag persons** - Flag persons shall be equipped as required in the governing manual with bright colored or fluorescent vests or clothing, flags and/or stop/slow paddles and other equipment as needed. During darkness, clothing shall be reflectorized and shall be visible for one thousand feet and the flag person shall be equipped with a flashlight with an orange cone.

4. **Adjacent Roadway Excavation** -- Where excavation adjacent to an existing roadway results in an elevation difference of greater than 0.16 foot, the excavated area shall be filled with compacted aggregate base (3/4 inch minus), flush with the adjacent roadway at a slope not to exceed 4:1 (horizontal to vertical) prior to the end of each workday. Native fill may be used with the approval of the Town Engineer.

5. **Steel Plates** -- Steel plates shall not be used over open trench areas without the approval of the Town Engineer. All steel plates shall be adequately pinned to eliminate shifting. All excavations covered by steel plates shall be shored. No steel plates shall be used on roads with vehicle speeds over 30 mph. Temporary pavement (cut-back) shall be used for a transition on each edge of the plate. A ("Rough Road") or ("Bump") sign shall be installed 200 feet ahead of the steel plate. The sign may be mounted to an operable, lighted barricade for a maximum of 24 hours. The sign shall be mounted to a 4"x4" post for a period exceeding 24 hours.

6. **Sidewalk Removal** -- Lighted barricades with construction ribbon are required where construction requires the removal of sidewalk or curb and gutter. Wooden lathe with flagging or cones shall not be allowed. Signs indicating "Sidewalk Closed" shall be installed at the ends of construction areas, where required by the Town Engineer.

I. **Preservation of Property** -- The Contractor shall take extreme care to protect existing site and adjacent improvements from damage. The Contractor shall be responsible for any damage resulting from the construction and shall repair or make replacement at their own expense.

J. **Personnel** -- Only personnel licensed in the particular trade undertaken shall be employed for the construction work.

K. **Weather** -- Construction work shall not commence or progress when the weather jeopardizes a safe working environment or the quality of the project in any manner.

L. **Trenching** -- Prior to excavation of trenches 5 feet or deeper, the Contractor shall submit the following to the Town Engineer:

1. A copy of the company's annual CAL OSHA trenching permit.

2. A copy of the company's letter informing CAL OSHA of the time the trenching is commencing and the location of the work.

M. **Trailer and Material Storage** -- Dumpsters, construction materials or equipment shall not be placed in the Town of Loomis right-of-way without first obtaining an Encroachment Permit from the PWD. Use of the Town right of way should not be requested if there is adequate storage space on-site. Construction offices or material trailers shall not be placed within the Town right-of-way.

N. **Street Cleaning** -- Where dirt or mud are tracked onto public street pavement, the Contractor shall clean the streets daily, or as directed by the Town Engineer. If the Contractor fails to keep the streets clean, the Town may clean the areas and bill the appropriate company.

O. **Interruption of Parking Areas** -- Where parking needs to be interrupted by construction work, the Contractor shall place Type II barricades with "No Parking" notices behind the curb, adjacent to the respective parking area, a minimum of 24 hours prior to the start of construction. Information on the notice shall include the date and times that parking is prohibited and shall be legible from a distance of 25 feet. Barricades/notices shall be placed at a minimum interval of one per parking space.

P. **Contractor Employee Vehicle Parking** -- The Contractor's employee parking shall be limited to designated areas on-site, and shall not encroach into designated wetland areas, tree protected zones or any other areas protected by jurisdictional boundaries, Conditions of Approval or Town ordinances.

Q. **Construction Safety** -- Construction safety within the Town of Loomis shall be governed by the Construction Safety Orders of the Occupational Safety and Health Standards of Title 8 of the California Code of Regulations.

R. **Blasting and Explosive Requirements** -- The Contractor shall have a valid California State Blasting License issued from the State of California Department of Industrial Relations, Occupational Safety and Health Administration, and a Town of Loomis Business License. Additionally, the Contractor shall obtain a Placer

County "Explosives Application/Permit" prior to any and all blasting within the limits of the Town of Loomis. The Contractor shall have on file, and keep current, the required insurance documents established by the Permit.

The Contractor shall notify the following Town Departments 24 hours in advance of blasting:

Sheriffs Department:	(916) 652-2400
Public Information Office: (Town Clerk)	(916) 652-1840
Public Works Dept.:	(916) 652-1840

2-3 DEVELOPER'S RESPONSIBILITY-- It shall be the Developer's responsibility for:

A. **Improvement Plan Submittal** -- The initial submittal of improvement plans to the Department of Public Works shall consist of the following:

1. 3 sets of plans, complete and in accordance with these Improvement Standards, along with any required specifications, computation, test data, and other material requested by the Town Engineer.

2. Two copies of the watershed map and drainage calculations in accordance with Town requirements.

3. An itemized cost estimate for all improvements. The improvements to be included on the estimate are as follows:

   a. All public facilities. (Public facilities include all improvements within the street right-of-way and public improvements outside of the right-of-way which are to be maintained by the Town.)

   b. All on-site underground storm drainage systems.

   c. All on-site/off-site underground utilities.

   d. Earth excavation quantities.

   e. Retaining and sound walls.

4. The plan check and inspection fee in accordance with the latest fee schedule adopted by the Town Council.

5. The name, address, and telephone number of the developer.

6. Utility letters in accordance with Section 5.

Should there be required alterations or revisions to the plans as submitted, the Town Engineer will return one copy with the corrections marked or indicated thereon. If the plans submitted are not prepared in accordance with these

Improvement Standards or are not in keeping with the standards of the profession, the Town Engineer may return them deeming them incomplete and no further action will be done until the required information is submitted.

B. **Plan Check and Inspection Fee** -- When improvement plans are initially submitted to the Town Engineer for checking, the total plan check fee for the development will be required to initiate checking of plans. The fee shall be in accordance with the latest fee schedule as adopted by the Town Council. It should be noted that the Plan Check and Inspection fees are estimates and that the actual cost of Town Services over the amount on deposit will be billed to the Developer/Contractor based on a time and material basis.

C. **Plan Approval** -- No plans will be approved nor construction authorized until such time as the Town Engineer signifies his approval by his signature on the set of plans and not unless such changes, corrections, or additions are resubmitted to the Town Engineer for approval as previously prescribed for the original plans. At such time as the Consulting Engineer preparing the plans has made the necessary revisions and paid the total plan check and inspection fee and any other applicable Town fees, the Town Engineer will sign the mylar title sheet in the space provided, after the Consulting Engineer and all other agencies have signed them. The Town Engineer's approval is valid for a period of twelve months. Should work not commence within the twelve month period, the plans shall be resubmitted for re-approval. A plan check fee may be required to cover the cost of rechecking.

D. **Final Plans Required** -- The Consulting Engineer shall deliver three sets of prints from the approved tracings to the Town Engineer's Office. Copies of the final utility letters shall be included with the approved plans delivered to the Town Engineer.

E. **Improvement Plan Revisions During Construction** -- Should changes become necessary during construction, the Consulting Engineer shall first obtain the consent of the Town Engineer and shall then resubmit the title sheet and the plan sheets affected for approval. The changes on the plans shall be made in the following manner:

1. The original proposal shall not be eradicated from the plans but shall be lined out.

2. In the event that eradicating the original proposal is necessary to maintain clarity of the plans, approval must first be obtained from the Town Engineer.

3. The changes shall be clearly shown on the plans with the changes and approval noted on a revision signature block, conforming to the Standard Details.

4. The changes shall be identified by the revision number in a triangle delineated on the plans adjacent to the change and on the revision signature block.

Minor changes which do not affect the basic design or contract may be made upon the authorization of the Town Engineer but said changes must be shown on "as built" plans when the contract is completed.

F. **Record Drawings** -- Computer generated CADD drawing (latest version), Mylar Record Drawings, and one set of blue line prints, are to be submitted to PWD within two weeks of completion of the improvements and are required within 90 days of the filing of the Notice of Completion Departmental Approval Form. Certification by Consulting Engineer of finished pad elevations of subdivision lots shall be required prior to final approval of subdivision improvements.

As Built Plans -- The Consulting Engineering shall keep an accurate record of all approved deviations from the plans and shall provide a copy of these records to the Town Engineer in mylar set and digital form upon completion of the work before final approval of the completed subdivision improvements. These are to be utilized with the Inspector's plans for preparing a complete and accurate set of "as built" plans for the permanent records of the Town.

Certification by the Consulting Engineer of the finished pad elevations of subdivision lots shall be required prior to final approval of the subdivision improvements.

G. **Conflicts, Errors, And Omissions** -- Excepted from approval are any features of the plans that are contrary to, in conflict with, or do not conform to any California State Law, Loomis Town Code or Resolution, conditions of approval, or generally accepted good engineering practice, in keeping with the standards of the profession, even though such errors, omissions, or conflicts may have been overlooked in the Town Engineer's review of the plans.

H. **Change In Consulting Engineer** -- If the developer elects to have a registered civil engineer or licensed land surveyor other than the engineer who prepared the plans provide the construction staking, he shall provide the Town Engineer in writing the name of the individual or firm one week prior to the staking of the project for construction. The Developer shall then be responsible for providing all professional engineering services which may be required during construction, the preparation of revised plans for construction changes, and the preparation of "as built" plans upon completion of the construction.

In the Developer's notification of a change in the firm providing construction staking, he shall acknowledge that he accepts responsibility for design changes and "as built" information as noted above.

I. **Existing Utilities** -- All existing utilities are to be shown on the plans. In addition, the Consulting Engineer shall submit prints of the preliminary and approved plans to the utility companies involved. This is necessary for the utilities to properly plan their relocation projects and needed additional facilities. Copies of the transmittal letters to the utility companies shall be provided to the Town Engineer. The transmittal letters shall indicate all utility pole conflicts which require relocation.

The conflict shall be referenced to stationing and distance from centerline. In addition, the following note shall appear on the first page of the plans: No pavement work will occur within the road right-of-way prior to completion of utility pole relocation.

J. **Partial Plans** -- Where the improvement plans submitted cover only a portion of ultimate development, the plans submitted shall be accompanied by the approved tentative plan or a study plan if there is no approved tentative plan showing topographic features of the ultimate development at an adequate scale to clearly show the proposed improvements.

K. **Other Agency Notifications** -- The Consulting Engineer is responsible for obtaining the approval and necessary permits of governmental or County agencies when their facilities are involved or their approval is required.

L. **Inspection Requirements** -- Any improvement constructed to the Town Improvement Standards for which it is intended that the Town will assume maintenance responsibility shall be inspected during construction by the Town Engineer or his authorized representatives. Each phase of construction shall be inspected and approved prior to proceeding to subsequent phases. The Town requires a pre-construction meeting 72 hours prior to start of work. No exceptions.

Private on-site grading and drainage shall be inspected during construction by the Town Engineer or his authorized representatives.

Any improvements constructed without inspection as provided above or constructed contrary to the order or instructions of the Town Engineer will be deemed as not complying with the Town Improvement Standards and will not be accepted by the Town for maintenance purposes.

The Consulting Engineer shall notify the Town Engineer when the **Contractor first calls for grades and staking and shall provide the Town Engineer with a copy of all cut sheets.**

Within ten days after receiving the request for final inspection, the Town Engineer shall inspect the work. The Contractor, Consulting Engineer, and Developer will be notified in writing as to any particular defects or deficiencies to be remedied. The Contractor shall proceed to correct any such defects or deficiencies at the earliest possible date.

At such time as the work has been completed, a second inspection shall be made by the Town Engineer to determine if the previously mentioned defects have been repaired, altered, and completed in accordance with the plans. At such time as the Town Engineer approves the work and accepts the work for the Town, the Contractor, Consulting Engineer, and Developer will be notified in writing as to the date of final approval and acceptance.

On assessment districts and projects where the Town participates in the costs thereof, quantities will be measured in the presence of the Town Engineer, Consulting Engineer, and Contractor and witnessed accordingly.

M. **Special Notices And Permits** -- The Consulting Engineer shall be responsible to the Contractor to give the following notices and have in his possession the following permits and plans:

1. Contractor shall be in receipt of Town approved plans prior to construction.

2. Contractor shall notify all utility companies involved in the development prior to beginning of work.

3. Contractor shall notify "Underground Service Alert" 48 hours in advance before any digging.

4. Contractor shall be responsible for the protection of all existing monuments and/or other survey monuments and shall notify Town Engineer of any damaged or removed Town, State, or Bureau monuments.

5. Contractor shall notify the Sewer District, Water Agency, Fire District and any other agency required to approve the project for permit and payment of required fees for sewer taps.

6. The Contractor shall verify all street names with the Town Engineer before ordering street signs.

7. Contractor shall be responsible for conducting his operation entirely outside of any floodplain and wetland boundaries. Floodplain and wetland boundaries shall be clearly delineated by fencing in the field prior to construction.

8. Contractor shall be responsible for conducting his operation entirely outside of any no grading area. These areas shall be clearly delineated by fending in the field prior to construction.

9. Where work is being done in an off-site easement, the Contractor shall notify the property owner 48 hours prior to commencing work, and provide a right-of-entry approval letter.

10. Where plans call for the retention of oak trees within a project, the Contractor shall be responsible for properly screening and flagging areas around oak trees to prevent damage during construction in accordance with the Loomis Zoning Code requirements for development around oak trees.

11. Where work being done requires the issuance of a permit by a State agency including but not limited to the State Department of Transportation, Department of Fish and Game, etc.

12. Contractor shall notify the water agency for permit and payment of received fees established or included in a pipeline extension agreement for inspection prior to water line work.

N. Plan Sheet Requirements

1. Paper Details -- All improvement plans shall be prepared on plan and profile sheets 22" or 24" x 36", F.A.S. sheets, Plate "A" plan and profile paper, or special consulting engineer's sheets which have been accepted by the Town. Scales: Horizontal 1" = 20', 40', or 50'; Vertical 1" = 2', 4', or 5', but only the scale, horizontal or vertical, for which the sheet was intended shall be used.

2. Drafting Standards -- All plans approved by the Town may be microfilmed. Therefore, certain drafting standards have become necessary to produce legible film and subsequent prints. All line work must be clear, sharp, and heavy. Letters and numerals must be 1/8 inch minimum height, well formed, and sharp. Numerals showing profile elevations shall not be bisected by station grid lines. Dimension lines shall be terminated by sharp solid arrowheads.

3. Title Sheet -- On subdivision or improvement plans exceeding three sheets in a set, a title sheet shall be prepared showing the following:

   A.* The entire subdivision or parcel and project.
   B. Assessment district limits (if any).
   C. Town limits.
   D. Street names and widths.
   E. Section lines, grant lines, and corners.
   F. Adjacent subdivisions, including names, lots lines, and lot numbers.
   G. Property lines.
   H. Public easements.
   I.* Location map.
   J. Scale of drawings.
   K.* Index of sheets.
   L. Legend of symbols.
   M.* Signature block conforming to Standard Drawing CD-1and situated at the lower right hand corner of the sheet.
   N. Separate title sheets shall be received for each phase of work.

   Improvement plans consisting of three or less sheets and encroachment plans shall not be required to provide a title sheet but shall be required to show all of the above in the plans.

   * Shall be shown on the front sheet of encroachment plans and plans consisting of three or less sheets.

4. Title Block -- Each sheet within the set of drawings shall have an approved title block showing the sheet title, number, date, scale, and the Consulting Engineer's name, signature, and license number.

The preferred location is across the right hand end of the sheets. This will facilitate the common method of plan storage by allowing the plan information to be viewed with the plans rolled up.

5. Drainage, Sewer, Water, And Grading Layout -- On all plans, the storm drainage, sanitary sewer, and domestic water systems shall be shown on an overall plan layout. In addition, the storm drainage and sanitary sewer systems shall be shown on the street plans. Separate grading plans will be required for all subdivisions. On all other plans, an overall plan layout will not be required but the above facilities shall be shown within the development and on the street plans.

   All plans showing the domestic water systems shall include signature blocks and be approved by the Town Engineer, Water District and Fire District and for encroachment approval by the Town Engineer. The signature block shall conform to Standard Details and shall be situated near the lower right hand corner of the first sheet of the water plans.

   Where wells are included as a part of the water system, the layout of the well site shall be drawn to a scale no smaller than 1 inch equals 5 feet, with the layout covering an area at least 50 feet in all directions from the well location.

6. Plan Details -- In addition to the other requirements of these Improvement Standards, the following details shall be shown on plans submitted for approval. This does not in any way exempt the Consulting Engineer preparing plans from the responsibility of preparing neat, accurate, and comprehensive plans in keeping with the standards of the profession.

   A. Right-of-Way -- Right-of-Way lines, the boundaries of lots fronting on the street, drainage easements, utility easements, planting easements, section lines and corners, land grant lines, and temporary construction easements, both existing and proposed, shall be shown on the plans. All right-of-way and easement lines shall be properly dimensioned.

   B. Topography -- All pertinent topographic features shall be shown, such as street lines, medians, driveways (on both sides of the street when within 40 feet of the median ending), curbs, sidewalks, shoulders, location and size of storm and sanitary sewer lines, high water and frequent inundation levels, water lines, gas lines, telephone conduits, other underground utilities, existing structures, houses, trees (6" and larger) and other foliage, traffic signals, street lights and pullboxes, underground electrical conduits, drainage ditches, utility poles, fire hydrants, retaining walls, masonry structures, and all other features of the area which may affect the design requirements for the area. When a potential utility conflict exists, "as built" elevations of the utilities shall be verified by the Consulting Engineer.

C. Contours and Elevations -- Existing contours or supporting elevations shall be shown on all plans submitted for subdivision, commercial improvements, or planned unit developments.

D. Profiles -- The plans shall show the existing profile of all roadway centerline, edges of pavement, curb and gutter flow lines, drainage ditches, storm and sanitary sewers. All profiles of proposed improvements shall state centerline elevations at 50 foot intervals and rate of grades, vertical curves, and other vertical alignment data. When curb and gutters are designed for reconstructed Town roads, elevations shall be shown at the edge of the outside traveled way, or if the road has a full paved section, shall also be shown two feet from the proposed lip of gutter. Any warped surface and vertical curve shall set elevations at 25 foot intervals. All profiles shall be coordinated with Town stationing. The Consulting Engineer shall contact the Town for such stationing. the plans shall show the existing ground profile for a minimum distance of 200 feet beyond temporary street endings to facilitate setting proper vertical alignment within the proposed improvement limits. The 200 foot minimum shall be increased when requested by the Town Engineer.

E. Stationing and Orientation -- The stationing on plan and profile shall read from left to right. Stationing shall increase from south to north or from west to east. Plans shall be so arranged that the North arrow points toward the top or upper 180 degrees, insofar as practical.

F. Bench Marks (Vertical Control) -- The bench marks and datum shall be clearly delineated on the plans both as to location, description, and elevations. The datum shall be 1929 North American Datum (U.S.Gor U.S.C. & G. S.). Consulting Engineers may contact the Town for location and elevation of the nearest official bench mark.

G. Typical Sections -- A typical section for each type of facility within the improvement, setting out the structural features, shall be a part of the plans.

H. Cross Sections -- Cross sections shall be included in the plans, where determined necessary by the Town Engineer. When, in limited areas, unusual topographic features or special conditions occur that would affect the work, individual cross sections may be shown on the pertinent plan sheet.

I. Special Notes -- Special notes shall be clearly indicated, and it shall be conspicuously noted on the plans that all construction work and installations shall conform to the Town of Loomis Standards and that all work is subject to the approval of the Town Engineer. Notes shall contain a statement regarding obtaining encroachment permits from other agencies when applicable.

J. Horizontal Control -- All projects shall staked and designed per State Plane Coordinates (Zone II). Please contact Town for list of Control points within Town Limits.

7. Required Notes -- A list of Town required notes shall be obtained from the Town engineer and shall be attached to the original tracings for all development plans submitted to the Town for approval.

2-4 MINIMUM REQUIREMENTS FOR MODEL HOME BUILDING PERMITS

Model home building permits may be issued when the following items are completed and verified:

A. The pad grades have been certified by a registered Civil Engineer or a licensed Land Surveyor and approved by the Town Engineer for the model home lots.

B. All property corners for each of the model home lots shall be staked to the satisfaction of the Town Engineer. If curb and gutter and sidewalk has been placed at the time for model home permits are applied, the front property corners shall be marked.

C. All utilities, utility crossings and utility extensions to each lot, located within the roadway, shall be installed except as provided for, within development agreement. Utilities include, but are not limited to: natural gas, electric, cable, telephone, water, sewer and storm drain.

D. Approved fire protection plan to be submitted to Town prior to start of construction.

E. If construction of the model homes will begin between April 16 and October 14, then a minimum 20 foot wide road with a minimum 4-inch road base, compacted to withstand the imposed load of 32 tons, must be completed to provide continuous access to a maintained public street to the satisfaction of the Town Engineer.

   If construction will begin and/or continues from October 15 to April 15, then all roads within the subdivision providing access to the model homes must be paved and connected to a maintained public street to the satisfaction of the Town Engineer.

   If the subdivider intends to obtain an alternative access to the model homes from an adjacent maintained public street, the subdivider shall obtain an encroachment permit from the Town Engineer.

The Town Engineer may require all work and construction on the model homes to cease at any time until all or additional portions of the subdivision improvements are finished in order to protect the health, safety or welfare of the public and workers.

2-5 MINIMUM REQUIREMENTS FOR PRODUCTION HOME BUILDING PERMITS

Production home building permits may be issued once the subdivision has been verified to be substantially complete. The subdivision shall be deemed to be substantially complete by the Town Engineer when the following items are completed or verified, except as provided for, within Development Agreements:

A. All surface street improvements (sidewalks, curbs, gutters, ramps, driveways and street paving) are installed.

B. Raise and pave all manholes and water valves. All water, sewer and storm drainage components shall be tested, approved and operational. This includes conformance to the Fire District's minimum flows for all fire hydrants.

C. Install all underground gas, electric, telephone and TV cable facilities and backfill trenches.

D. Street lighting system tested and accepted.

E. Submit lot pad certifications for grade and compaction.

F. Mark lot corners in Town sidewalk or curb and gutter and at the back of lots.

G. Install erosion control measures.

H. Install street name and traffic signs and striping.

I. Construct all common lot retaining walls per the improvement plans Construct sound walls at lots for which permits are applied.

J. Assure final subdivision map is recorded.

2-6 REQUIREMENTS FOR SUBDIVISION NOTICE OF COMPLETION (N.O.C.)

Prior to acceptance of public improvements, the following items shall be completed and verified by the Public Works Department:

A. The Contractor shall notify all required Town departments and agencies for a final inspection of constructed improvements. Following a final inspection of the project, the responsible agency shall issue the Contractor a final punchlist. The Contractor shall repair or address all items on the punchlist.

B. Project Design Engineer to submit Record Drawings on CADD, mylars and one set of prints to the Public Works Department, within 90 days following filing of Notice of Completion, without exceptions.

C. Receive lot pad elevation and compaction certifications and forward to the Town Engineer.

D. Developer receives sign-off of the "Notice of Completion Departmental Approval Form" by all required departments and delivers to the PWD.

E. Developer has paid all outstanding plan check and inspection fees.

F. Developer has posted a Maintenance Bond to cover one year construction maintenance warranty period. Maintenance bond to be 50% of final construction cost for public improvements, only.

G. On all Town owned and/or maintained sound walls the developer is required to submit written certification that anti-graffiti paint coat has been placed on all sound walls.

H. Temporary fencing erected to enclose the frontage of model home areas shall be removed from the Town right-of-way.

2-7 RESIDENTIAL OCCUPANCIES DURING SUBDIVISION BUILDING -- Upon the occupancy of one or more homes, the occupant(s) shall have a safe, clean, un-obstructed travelway, including sidewalks, in accessing and exiting the area of their home, applying to newly constructed streets within the subdivision extending to the closest existing street. The following minimum standards are to be met:

A. Streets shall be thoroughly cleaned, back of walk to back of walk at the end of each work day.

B. No building materials, portable toilets or construction equipment shall be stored within the street right-of-way.

C. Piles of landscaping related materials (such as cobbles, bark or gravel) may be staged in the streets for immediate removal. If stored overnight, a lighted barricade shall be placed to each side of the pile, toward traffic. The pile shall not extend into the street from the curb, further than the width of a parked car.

D. Unoccupied cul-de-sacs or other sections of streets for which there is no public access necessary shall be barricaded. Barricades shall be Type III (or fencing as approved by the Town Engineer).

E. Temporary fencing erected to enclose the model home areas shall not be placed further into the street than the top of the Town curb. The fencing shall not be anchored into the sidewalk, curb or gutter. The fencing shall be removed prior to issuance of a Notice of Completion.

F. All other requirements within the Subdivision Ordinance and Building Division regulations for approval of occupancy shall apply.

2-8 GUARANTEE AND WARRANTY-- The Contractor shall guarantee and warrant all materials supplied as being fit for the purposes intended. The Contractor shall guarantee and warrant all work performed as having been accomplished in a proper and workman-like manner.

Should any failure of work occur within the warranty period, the Contractor shall promptly make the needed repairs at the Contractor's own expense. Should such failure of work result in excessive maintenance by the Town, or in the opinion of the Town, the failure is best left un-repaired, the Contractor shall incur the additional maintenance cost. The cost shall be equal to the annual maintenance cost divided by the current prime rate.

Should the Contractor not make or undertake the necessary repairs within 30 days of having received written notification from the Town Engineer, the Town may make the repairs and the Contractor shall pay the entire cost thereof. In emergency cases, where in the opinion of the Town Engineer (provided a reasonable attempt has been made to notify the Contractor) delay would cause serious loss or damages, or a serious hazard to the public, the repairs may be made without prior notice to the Contractor, and the Contractor shall pay the entire cost thereof.

The procedures for review, repair and release of guarantee and warranty obligations shall be as follows:

A. **Subdivision Improvements** -- The guarantee and warranty shall continue for a period of one (1) year after Notice of Completion for all work installed under a Subdivision Agreement. The Subdivision Agreement shall be binding in its entirety.

   The following procedures shall be followed for completion of the guarantee and warranty for subdivision improvements:

   1. All necessary Town departments shall complete their guarantee and warranty inspections during approximately the tenth month following the Notice of Completion and prepare and deliver a final punchlist to the Contractor by approximately the end of the tenth month.

   2. Within 30 days of receipt of the final punchlist (during the eleventh month), the Contractor shall repair or address all items indicated. All Town departments issuing a punchlist shall then be notified for reinspection of repairs.

   3. Within 30 days of notifying the Contractor (by the end of the eleventh month), the Town departments shall reinspect the repaired improvements. Upon the Town's approval of the repairs, the maintenance bond will be allowed to expire, at the conclusion of one year following the Notice of Completion. If the Contractor does not complete the required work by the end of the eleventh month, the list of repairs will be referred to the Town Attorney's office for further management.

B. **Encroachment Permit Improvements** -- The guarantee and warranty shall continue for a period of 6 months after approval from all Town departments affected, for all work installed and completed under an Encroachment Permit. The Encroachment Permit shall be binding in its entirety. The following procedures shall be followed for completion of the guarantee and warranty for Encroachment Permit improvements:

1. All necessary Town departments shall complete their guarantee and warranty inspections during the last two weeks of the fifth month following the date of the Town's acceptance of the work. The Contractor shall be issued a punchlist upon the conclusion of the two week inspection period.

2. The Contractor shall complete the required repair work by the end of the sixth month following the initial approval of the work

3. Within 30 days of notification, the Town departments shall re-inspect repaired improvements, and upon approval of the repaired improvements, shall notify the Public Works Department.

C. **Underground Warranty Work within Town Street Right-of-Way** -- All underground work done as a result of the one year warranty inspection shall comply with the following:

1. All backfill in Town streets shall be two sack, concrete slurry.

2. The asphalt concrete patch shall conform to the Standard Details.

3. Depending upon the extent of asphalt concrete patching necessary and at the discretion of the Public Works Inspector, a slurry seal or one inch asphalt concrete overlay of the entire street width in the area of the patches may be required.

TOWN OF LOOMIS
DEPARTMENT OF PUBLIC WORKS APPROVAL

PLANS ARE ACCEPTED FOR USE AS WORKING DOCUMENTS. UNDISCOVERED ERRORS AND OMISSIONS SHALL BE CORRECTED AT THE DEVELOPER'S EXPENSE AS DISCOVERED. THIS APPROVAL EXPIRES ONE (1) YEAR FROM THE APPROVAL DATE UNLESS AN EXTENSION IS APPROVED IN WRITING BY THE DEPARTMENT OF PUBLIC WORKS OR CONSTRUCTION HAS BEEN INITIATED. EXPIRATION WILL RESULT IN A REQUIREMENT TO RESUBMIT THE PLANS FOR PLAN CHECK, PAYMENT OF CURRENT FEES AND COMPLIANCE WITH CURRENT TOWN STANDARDS. ANY REVISIONS TO THESE PLANS SHALL BE SUBMITTED FOR REVIEW AND APPROVAL.

TOWN ENGINEER

DATE

REVISION BLOCK

REVISION												
DATE												
TOWN APPROVAL												
AGENCY APPROVAL												

NOTE: ADD THE REQUIRED AGENCY APPROVAL BLOCK(S).

APPROVED BY:

BRIAN J. FRAGIAO
DIRECTOR OF PUBLIC WORKS/TOWN ENGINEER

REVISED:

TOWN OF LOOMIS

SIGNATURE BLOCK

DEPARTMENT OF PUBLIC WORKS

CD-1

SECTION 3

STREETS (H)

CONSTRUCTION
IMPROVEMENT STANDARDS

SECTION 3

STREETS

3-1 GENERAL -- Street surface improvements shall include: barricades, bikeways, bridges, bollards, curb, curb & gutter, driveways, pavement, ramps, sidewalk, survey monuments and tunnels. These improvements shall be installed in accordance with the approved improvement plans, these Improvement Standards and the latest edition of The State of California Department of Transportation Standard Specifications hereinafter referred to as the Caltrans Standard Specifications.

3-2 CONNECTION TO EXISTING IMPROVEMENTS -- Connection to existing surface improvements require that the following conditions be met:

A. Existing Stub Street Connection -- The Developer shall be responsible for removing and reconstructing a portion of the existing roadway to make a satisfactory connection, as required by the Town Engineer.

B. Street Widening -- When widening to complete a partial street along a development project, the Developer shall be responsible for saw cutting and removing a narrow strip along the outside portion of the pavement to provide a clean and stable pavement section for constructing against. The width from centerline shall be shown on the approved plans or as determined in the field, and verified by the Town Engineer.

C. Cutting of Existing Streets -- Before any cuts are made in an existing street by the Contractor, or any governmental agency, Public Works shall receive notification and a set of the approved plans.

3-3 CONSTRUCTION STAKING -- Construction staking shall be provided by the Developer for all surface improvements. Such staking shall provide the station and offset, as well as the cut to the nearest hundredth (0.01) of a foot for concrete and paving and (.10) of a foot for rough grading. Stakes shall be provided at a minimum of every 50 feet in tangent sections and every 25 feet in curved sections. If approved, vertical curves shall be staked every 10 feet. Monuments shall have straddle ties placed. The Town Inspector must be supplied with two (2) sets of cut sheets prior to construction, without exception.

3-4 INSTALLATION

A. Subgrade

1. Subgrade for Sidewalk, Driveways and Ramps -- Subgrade for Town concrete flatwork and curbs back of Type 1 and 2 curb and gutter shall be processed to 90% relative compaction and shall be tested and certified by the Developer's licensed geotechnical engineer. Written certification shall be provided to the Town Engineer prior to the placement of concrete. Aggregate bases shall be required under the sidewalk.

Sidewalk subgrade exposed upon the removal of existing sidewalk shall remain intact unless it is determined by the Town's Inspector to be unstable. In this event, it shall be processed per the preceding paragraph.

2. Subgrade for Asphalt Concrete paving and Type 1 and Type 2 Curb and Gutter -- Subgrade shall be processed to 95% relative compaction and shall be tested and certified by the Developer's licensed geotechnical engineer. Written certification shall be provided to the Town Engineer prior to the placement of aggregate base or subbase.

B. Aggregate Base and Subbase -- Roadway aggregate base and base for sidewalk, curb and gutter shall not be placed until the following items of construction within the Town street right-of-way are completed:

1. Installation of underground sewer and water systems and testing or televising, and approval of same by the agency Inspector.

2. Installation of the underground storm drain system and approval of same by the Inspector.

3. Installation of electric, natural gas, telephone and cable TV crossings.

4. Backfill and compaction testing of all trenches related to the above and approval of same by the Inspector.

All aggregate base and subbase (AB and ASB) shall be installed per provisions in Sections 25 and 26 of the Caltrans Standard Specifications. AB and ASB shall be compacted to 95% relative compaction. If required by the PWD Inspector, AB and ASB shall be tested for compaction by the Developer's licensed geotechnical engineer. Written certification shall be provided to the PWD Inspector. An oil seal is not required on the AB surface.

Aggregate base shall be installed as a base for asphalt concrete paving and Type 1and 2 curb and gutter and where specified on the approved plans unless lime and fly ash treatment is used.

Where valley gutters are placed (excluding Type A-7 driveways) the same rock base section used for the adjacent pavement shall be used for the valley gutter.

C. Concrete -- All concrete (curbs, curb & gutters, driveways, curb ramps and sidewalks) shall be installed per provisions in Section 73 of the Caltrans Standard Specifications and per the Standard Details and per the following provisions:

1. Thickness -- All residential and commercial sidewalk adjoining the curb and gutter shall be a minimum of four inches thick. All meandering residential and commercial sidewalk shall be four inches thick, except across commercial driveway locations which shall be six inches thick.

All commercial driveways, including valley gutters and five foot wide sidewalks in the A-6 driveways, shall be a minimum of 6 inches thick, with number 4, grade 60 rebar, on 18 inch centers each way as required by Town Engineer. Rebar shall be set on 2 inch concrete dobies/rebar supports at three foot maximum spacing each way. The dobies shall include wire ties.

2. Finishing -- Concrete shall not be placed or finished in the rain. It shall be the Contractor's responsibility to schedule construction operations accordingly.

   All gutters shall be flow tested with water during the pour to assure proper drainage.

   All concrete surfaces shall be completed with a medium broom finish unless otherwise specified. A heavy broom finish is not allowed. A concrete finish not conforming to the Caltrans Standard Specifications with regard to blemishes and alignment tolerances shall be cause for rejection of the work.

   A four foot by four foot section of truncated domes shall be placed at the back of curb line, immediately behind the curb and gutter, centered in the opening to the street (regardless of slope) at every newly constructed access ramp. The domed section shall consist of four, two foot square panels and shall be attached together as a four foot by four foot panel at the factory. The truncated domes shall not be placed on the sloped portion of the ramp. See Section 3-5 of these Construction Standards for truncated dome materials requirements.

3. Expansion joints, deep tool joints and score marks -- Expansion joints shall be placed at 60 foot intervals and at curb returns in curb, gutter and sidewalk sections. The joint material shall be 1/4 inch cellulose fiber per the Caltrans Standard Specifications. Deep tool joints and score marks shall be placed at the following intervals for the sidewalk widths indicated (all deep tool joints shall be 2 inches deep):

   Required Spacing For Deep Tool and Score Mark

Sidewalk Width (ft.)	Deep Tool Spacing (ft.)	Score Mark Spacing (ft.)
4	12	4
5	10	5
6	12	6
8	8	n/a
10	10	n/a

   A deep tool joint shall be placed at the back of the curb for the total length of all monolithic curb, gutter and sidewalk.

   All barrier curb and valley gutters shall include deep tool joints at 12 foot intervals and expansion joints at 60 foot intervals.

   Expansion joint material shall not be placed against an existing or cured surface, but shall only be set with wet concrete on both sides.

4. Grades -- All sidewalks (including portions through driveways and curb ramps) shall be constructed with a minimum cross slope of 1% and a maximum of 2%.

The maximum grade allowed in the direction of pedestrian travel is 8%. In the case of steep longitudinal street grades, 20 feet is the maximum transition length required to obtain a 8% grade. If a 8% grade cannot be obtained in 20 feet, the maximum grade may be increased to 8.33% in 20 feet or more. The maximum required transition length is 25 feet. Any change to maximum grades require prior approval by Town Engineer.

For access ramp landings, the maximum allowable grade is 1% minimum and 2% maximum, perpendicular to the street. Parallel to the street, the grade of the landing shall conform to the longitudinal grade of the street.

5. Monolithic Sidewalk, Curb and Gutter -- All adjoining sidewalk, curb and gutter shall be poured monolithic.

6. Curb and Gutter Installation In An Existing Street -- In an existing street, a minimum width of 24 inches of existing asphalt concrete paving shall be removed outside the proposed gutter lip and the lip poured against a form board. The resulting patch between the gutter lip and the existing pavement shall be 6 inches thick, or the thickness of the existing pavement, whichever is greater.

7. Epoxy Work -- Where concrete curb is epoxied to a concrete or asphalt concrete surface, 95% of the surface, below and within the boundaries of the curb, shall be coated with epoxy. If extruded concrete curb is removed for pavement widening, the asphalt concrete pavement shall be patched with asphalt concrete fines to the satisfaction of the Public Works Inspector. Epoxy shall be two part and conform to the Caltrans Standard Specifications.

8. No Sidewalk at Back of Retaining Curb -- At any Town curb ramp, no pedestrian surface (i.e., concrete, asphalt concrete, paving stones, etc.) adjacent to the back of sidewalk, shall be constructed within 3 feet behind the retaining curb. This area shall be finished with landscaping only.

D. Asphalt Concrete -- All asphalt concrete (AC) shall be installed per provisions in Section 39 of the Caltrans Standard Specifications.

Existing AC surfaces shall be cut to a neat, straight line parallel with the street centerline and the exposed edge shall be tacked with emulsion prior to paving. The exposed base material shall be graded and recompacted prior to paving.

Asphalt concrete shall not be installed in the rain. It shall be the Contractor's responsibility to schedule construction operations accordingly.

E. Sound and Retaining Walls -- Construction of sound and retaining walls shall conform to the approved plans on those sound and retaining walls owned and/or maintained by Town. An anti-graffiti coating shall be applied to the Town side of all sound and retaining walls bounding the Town right-of-way and as owned and/or maintained by Town. The coating shall be Prosoco Graffiti Stop, two coat application, Krystalkote, or approved equal. The

Public Works Inspector shall be furnished a letter certifying that the coating has been applied per these Improvement Standards, prior to the Notice of Completion.

F. Survey Monuments -- All street survey monuments shall be installed per the Standard Details except as otherwise provided by the Town Engineer. Surface monuments shall be driven flush with the surface pavement. All lot property corners which fall within concrete sidewalks shall be installed in accordance with Standard Details.

All rear lot property corners shall be marked with a 1/2 inch rebar, 12 inches long, the top flush with finish grade. All lot corners at the street shall be marked with a sawcut score mark, a minimum of 2 inches long and 1/4 inch deep, at the back of the Town sidewalk or back of curb, whichever applies, or as indicated on the recorded parcel or final map.

G. Street Barricades -- All street and sidewalk barricades shall conform to Standard Details.

3-5 MATERIALS

A. Aggregate Base and Subbase -- All aggregate base and subbase (AB and ASB) materials shall be Class 2 as specified on the approved improvement plans and shall conform to provisions in Sections 25 and 26 of the Caltrans Standard Specifications. Asphalt concrete grindings may be used as AB or ASB provided the Contractor supplies the Town documentation that the material meets the Class 2 specifications.

B. Asphalt Concrete -- All asphalt concrete (AC) materials shall be Type B as specified on the approved improvement plans and shall conform to provisions in Section 39 of the Caltrans Standard Specifications. The top lift finish course shall have 1/2 inch rock gradation, lower lifts may be ¾ inch gradation. A surface course of 3/8 inch may be used over utility trenches in existing streets, upon pre-approval of the Public Works Inspector.

C. Concrete -- All concrete (curbs, curb & gutters, sidewalks) shall be Class A, 6 sack mix, Type II and shall conform to provisions in Section 90 of the Caltrans Standard Specifications, unless otherwise noted in the Construction Details.

D. Concrete Additives -- Concrete additives shall conform to the Caltrans Standard Specifications and shall only be used upon the approval of the PWD Inspector.

E. Lime/Fly Ash -- On a case by case basis, lime/fly ash subgrade treatment may be an acceptable substitute for placement of compacted aggregate base material.

Prior to plan approval, the Developer shall submit a proposal for lime/fly ash sections and compaction efforts, accompanied by recommendations from a licensed geotechnical engineer, to the Town Engineer for review.

F. Truncated Domes -- Truncated dome panels shall be of vitrified polymer composite construction, embedded type, manufactured by Armor Tile Tactile Systems, Buffalo, New York, or approved equal. The dimensions and orientation of the truncated domes within the panel shall conform to Caltrans Standard Plans.

STREETS STANDARD DETAILS

STREET SECTION BY RESIDENTIAL ZONING

PUBLIC STREETS

ZONING = RA (4.6)

NO. OF PARCELS	STREET WIDTH (FT)	STRUCTURAL SECTION	SHOULDER WIDTH (FT)	R/W (FT)	CLASS
0-4	20	AC/AB	5	50	C
5-15	24	AC/AB	5	50	A&B
16-50	24	AC/AB	8	50	A&B
OVER 50	36	AC/AB	8	50	RESIDENTIAL

ZONING = RE (2.3)

NO. OF PARCELS	STREET WIDTH (FT)	STRUCTURAL SECTION	SHOULDER WIDTH (FT)	R/W (FT)	CLASS
0-4	20	AC/AB	5	50	C
5-50	24	AC/AB	8	50	A&B
OVER 50	36	AC/AB	8	50	RESIDENTIAL

ZONING = RR (1.0)

NO. OF PARCELS	STREET WIDTH (FT)	STRUCTURAL SECTION	SHOULDER WIDTH (FT)	R/W (FT)	CLASS
0-4	20	AC/AB	5	50	C
5-50	24	AC/AB	8	50	A&B
OVER 50	36	AC/AB	8	50	RESIDENTIAL

ZONING = RS-20, RS-10, RS-10a, RS-7, RS-5, RM-5 & RM-3.5

NO. OF PARCELS	STREET WIDTH (FT)	STRUCTURAL SECTION	SHOULDER WIDTH (FT)	R/W (FT)	CLASS
0-4	28	AC/AB	SW, C&G	50	A&B
5-50	28	AC/AB	SW, C&G	50	RESIDENTIAL
OVER 50	36	AC/AB	SW, C&G	50	RESIDENTIAL

PRIVATE STREETS ONLY - THE STANDARD 50-FOOT WIDE ROADWAY EASEMENT MAY BE REDUCE (NO LESS THAN 30 FEET) IF THE TOWN DETERMINES THAT:

- THERE WILL BE 4 OR LESS EXISTING AND PROPOSED PARCELS USING THIS ROAD EASEMENT,
- THE ROAD DOES NOT PROVIDE ACCESS FOR FUTURE DEVELOPMENT IN THE AREA,
- THE DEVELOPMENT ADHERES TO THE GENERAL PLAN AND ZONING ORDINANCE,
- THAT THERE IS ADEQUATE AND USEABLE WIDTH OF AT LEAST 20 FEET (FOR A 30' PROPOSED ROAD EASEMENT, AT LEAST 10' FOR A 40' PROPOSED ROAD EASEMENT) ON THE ADJACENT PROPERTY FOR FUTURE EASEMENT AND ROAD IMPROVEMENTS,
- THE REDUCED EASEMENT WIDTH WILL PROVIDE THE REQUIRED STREET, SHOULDER AND DRAINAGE SWALE IMPROVEMENTS, AND PROVIDE FOR SAFETY, OBSTRUCTION AVOIDANCE AND UTILITY IMPROVEMENTS,
- WILL ADHERE TO THE TOWN AND OTHER AGENCIES REVIEW REQUIREMENTS (WHICHEVER IS MORE STRINGENT)

PROVED BY: BRIAN J. FRAGIAO DIRECTOR OF PUBLIC WORKS/TOWN ENGINEER REVISED:		TOWN OF LOOMIS STREET SECTION IMPROVEMENTS BY RESIDENTIAL ZONING DEPARTMENT OF PUBLIC WORKS	H-0

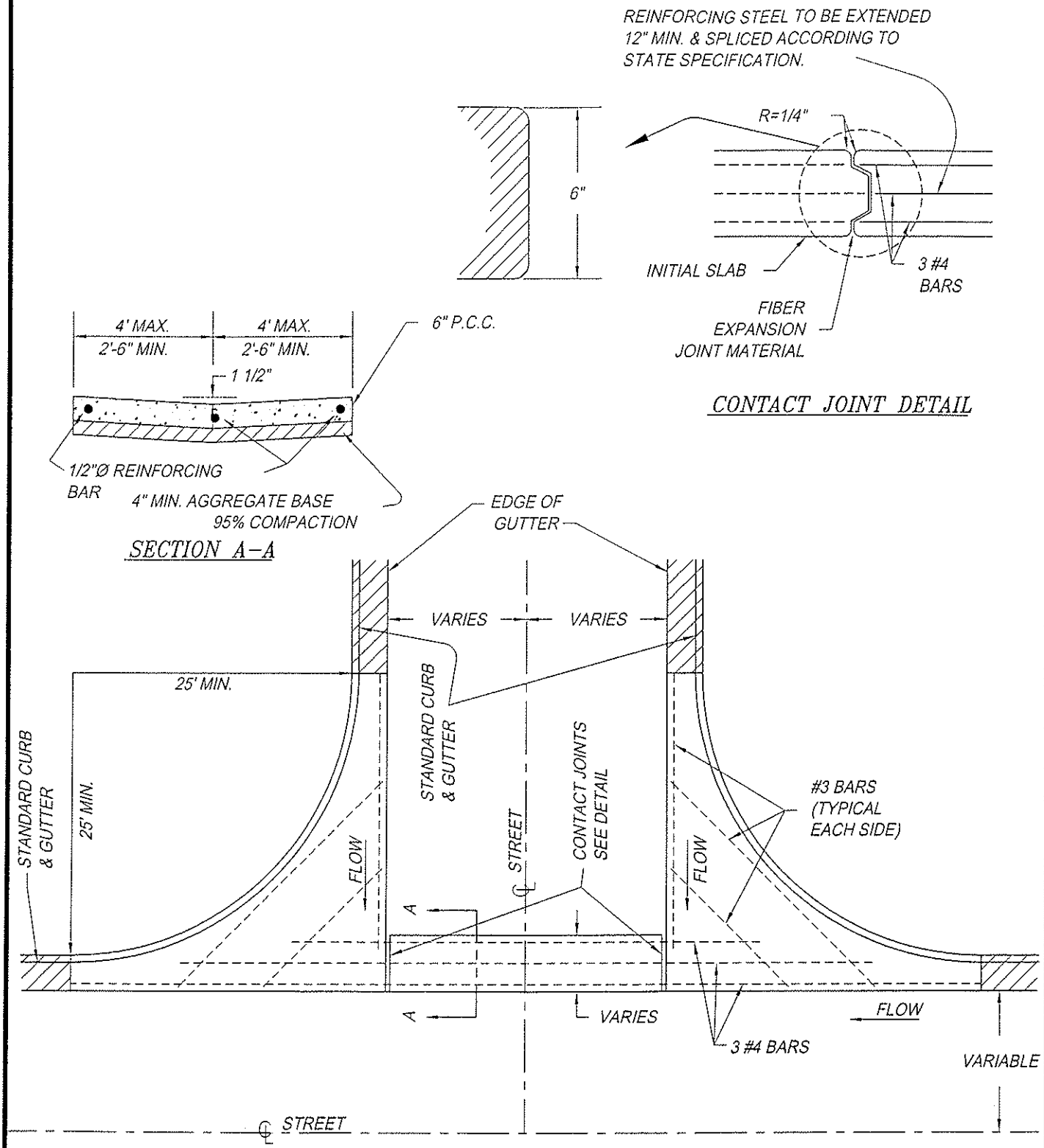

NOTE: 4" MIN. AGGREGATE BASE TO BE PLACED WITHIN LIMITS OF CROSS GUTTER. (95% RELATIVE COMPACTION)

APPROVED BY: BRIAN J. FRAGIAO DIRECTOR OF PUBLIC WORKS/TOWN ENGINEER REVISED:		TOWN OF LOOMIS **CROSS GUTTER** DEPARTMENT OF PUBLIC WORKS	**H-1**

Date: 1/22/03 Dwg. Name: hw01.dwg

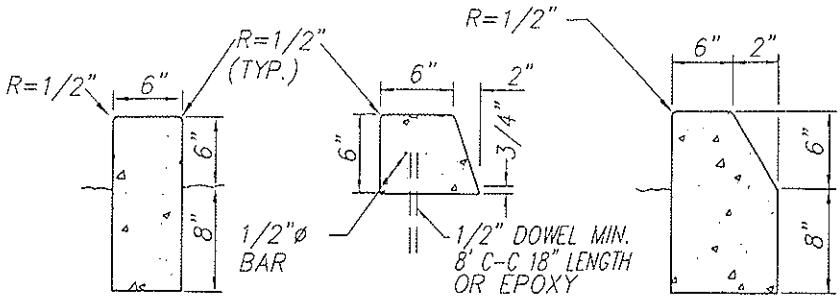

TYPE 3 TYPE 4 TYPE 5

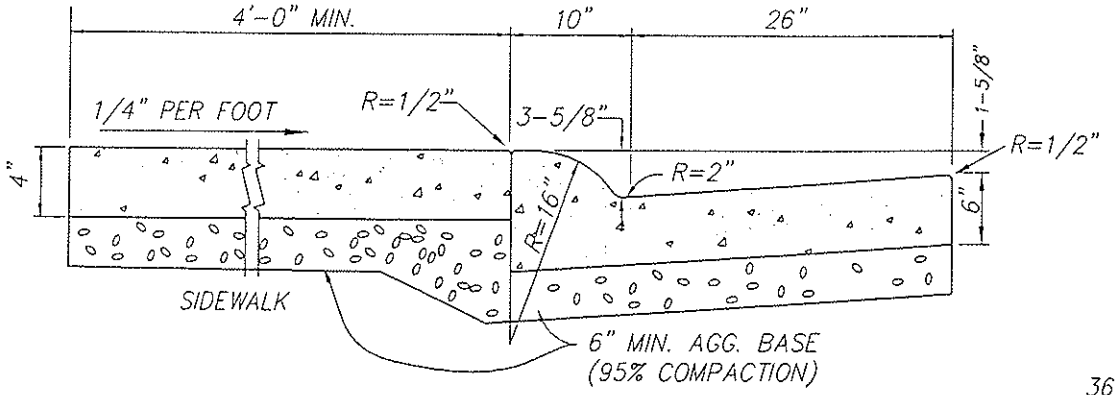

TYPE 1
ROLLED CURB

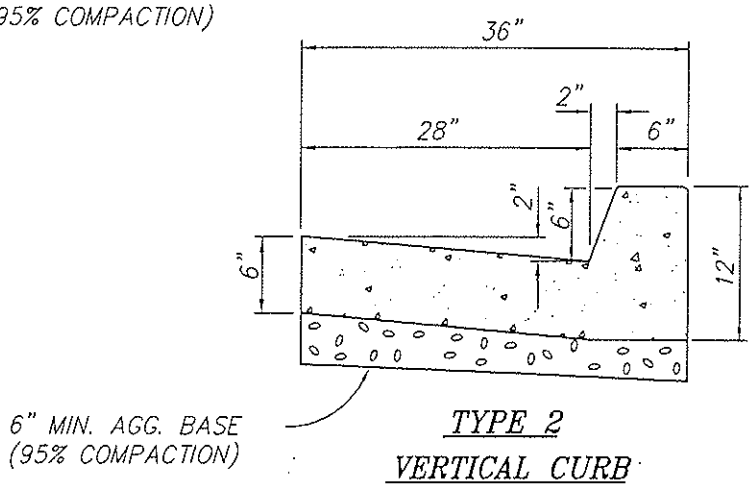

TYPE 2
VERTICAL CURB

NOTES:

1. LOCATE 1-1/2" DEEP SCORES AT 10 FOOT INTERVALS W/ 1/2" SCORES AT 5 FOOT INTERVALS. ALL CONCRETE TO BE CLASS A (6 SACK). EXPANSION JOINT FELT EVERY 20' WITHIN SIDEWALK SECTIONS.
2. CURB HEIGHT OTHER THAN 6" IS NOT DESIRABLE AND SHOULD BE SUBJECT TO APPROVAL OF THE TOWN ENGINEER.
3. MEANDERING SIDEWALKS NOT TO INCLUDE AGGREGATE BASE (CASE BY CASE) AS APPROVED BY THE TOWN ENGINEER.

APPROVED BY: BRIAN J. FRAGIAO DIRECTOR OF PUBLIC WORKS/TOWN ENGINEER REVISED:		TOWN OF LOOMIS **CURBS & GUTTERS** DEPARTMENT OF PUBLIC WORKS	H-2

Date: 1/22/03 Dwg Name: h-02.dwg

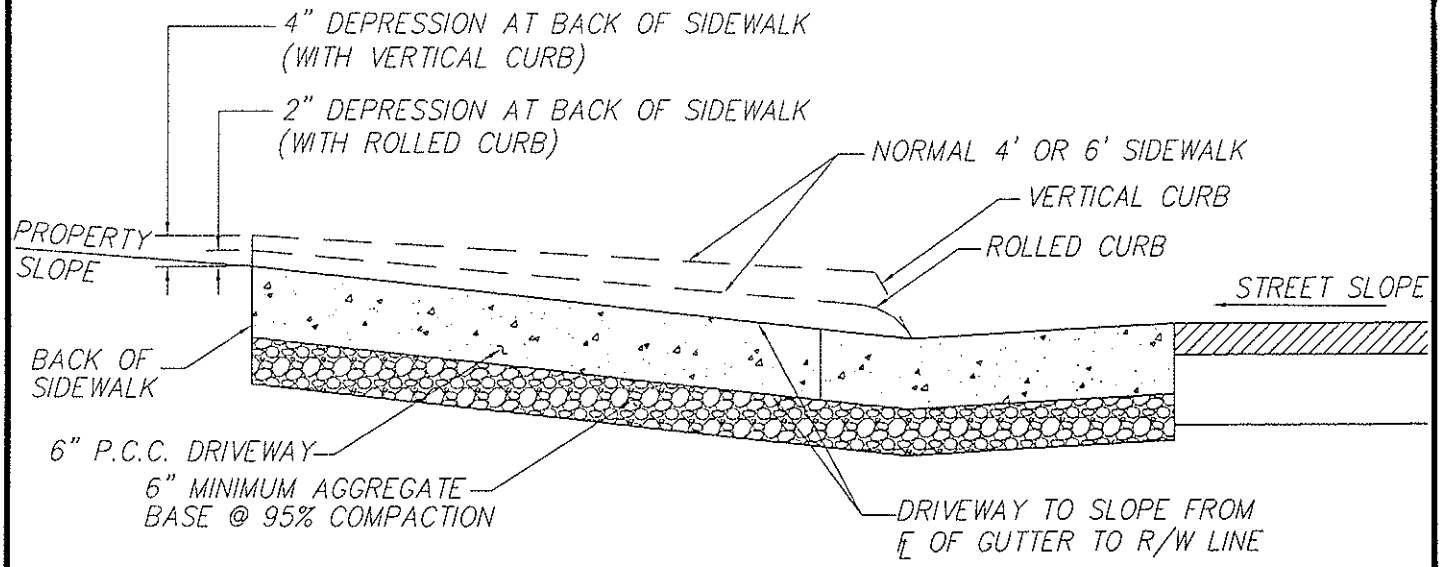

TYPICAL DRIVEWAY SECTION

NOTE: THE PROPERTY SLOPE FOR THE FIRST 20' FROM THE BACK OF THE SIDEWALK MUST BE DESIGNED SO THAT THE ALGEBRAIC DIFFERENCE OF THE PROPERTY SLOPE AND STREET SLOPE WILL NOT EXCEED 7% WITH VERTICAL CURB AND 10% WITH ROLLED CURB. IF PROPERTY SLOPE IS NEGATIVE, IT IS NOT TO EXCEED 5% FOR THE FIRST 20' FROM THE BACK OF THE SIDEWALK.

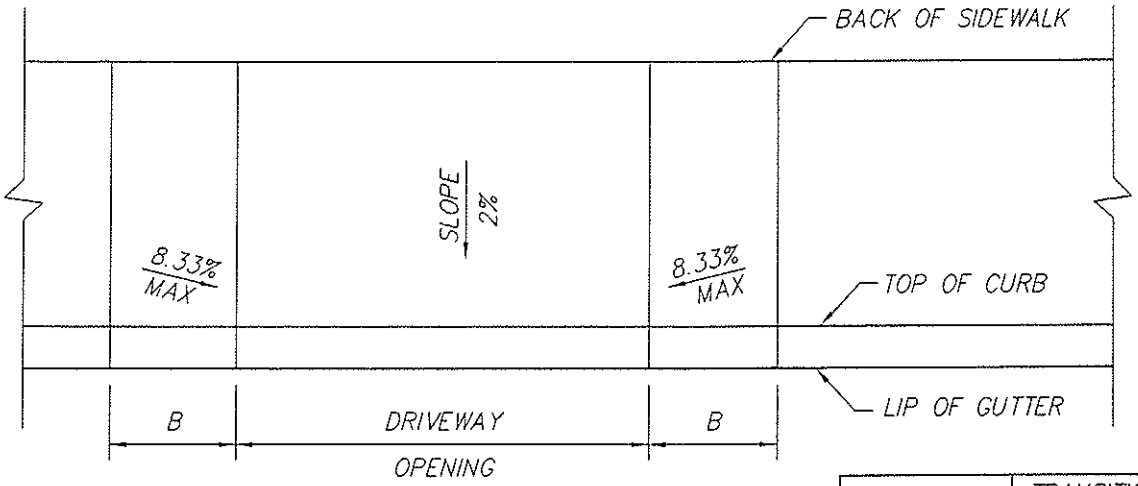

CURB TYPE	TRANSITION B
ROLLED	4'
VERTICAL	6'

NOTES:
1. FOR CURB HEIGHT OTHER THAN STANDARD, THE MAXIMUM 8.33% SLOPE CONTROLS TRANSITION LENGTH B.
2. ALL SUBGRADE WITHIN TOWN RIGHT OF WAY SHALL BE SCARIFIED PROCESSED AND COMPACTED TO 95%

APPROVED BY:

BRIAN J. FRAGIAO
DIRECTOR OF PUBLIC WORKS/TOWN ENGINEER

REVISED:

TOWN OF LOOMIS

COMMERCIAL DRIVEWAYS TYPE A-6

DEPARTMENT OF PUBLIC WORKS

H-3

Date: 1/22/03 Dwg. Name: h-03.dwg

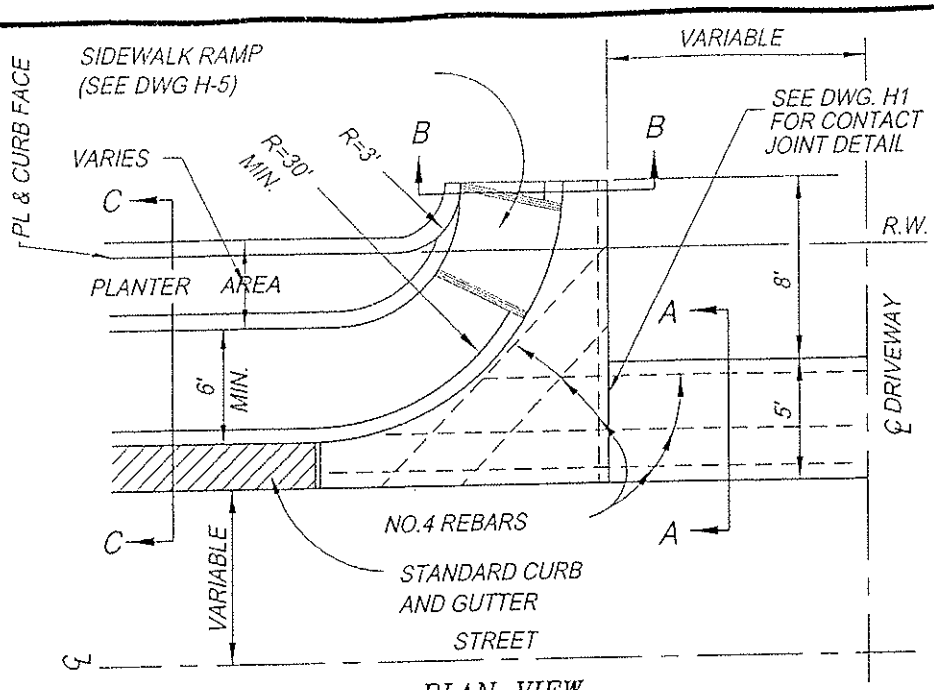

PLAN VIEW

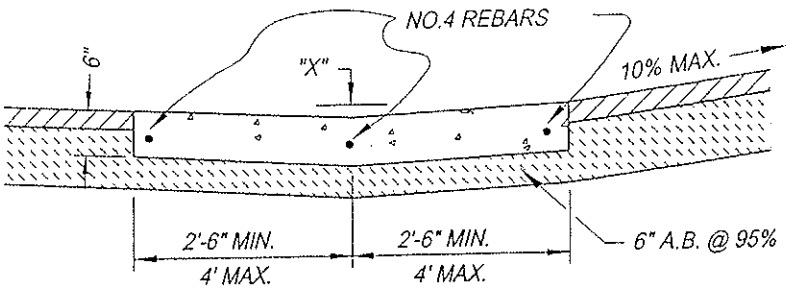

"X" = 1-1/2" FOR 5'WIDE X-GUTTERS

"X" = 2" FOR 8'WIDE X-GUTTERS

SECTION A–A

NOTES:

1. CROSS CUTTERS AND SPANDREL ARE REQUIRED FOR ALL COMMERCIAL ENTRANCES.
2. SEE STD. DWG H-1 FOR CROSS GUTTER DETAILS, H-10 FOR PLANTER DETAILS.

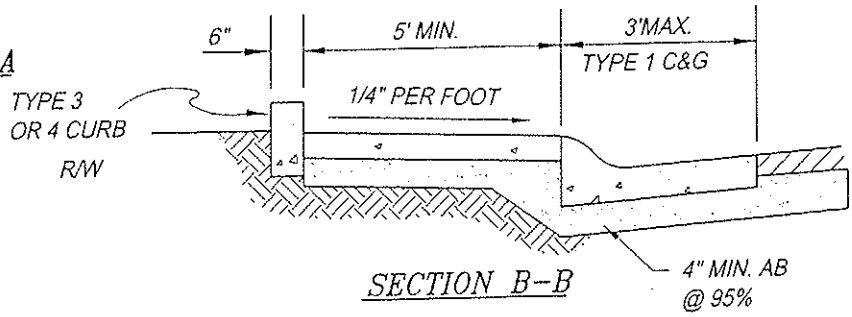

SECTION B–B

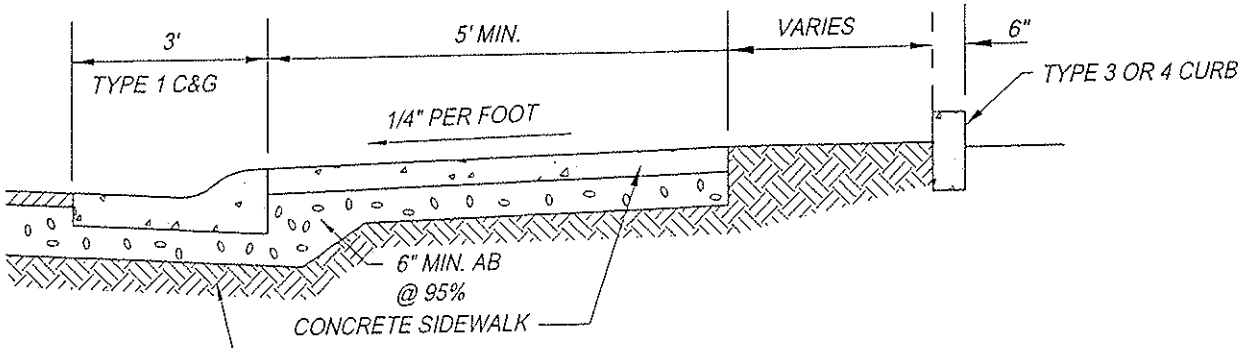

SECTION C–C

APPROVED BY: BRIAN J. FRAGIAO DIRECTOR OF PUBLIC WORKS/TOWN ENGINEER REVISED:		TOWN OF LOOMIS COMMERCIAL FRONTAGE ENTRANCE DEPARTMENT OF PUBLIC WORKS	H-4

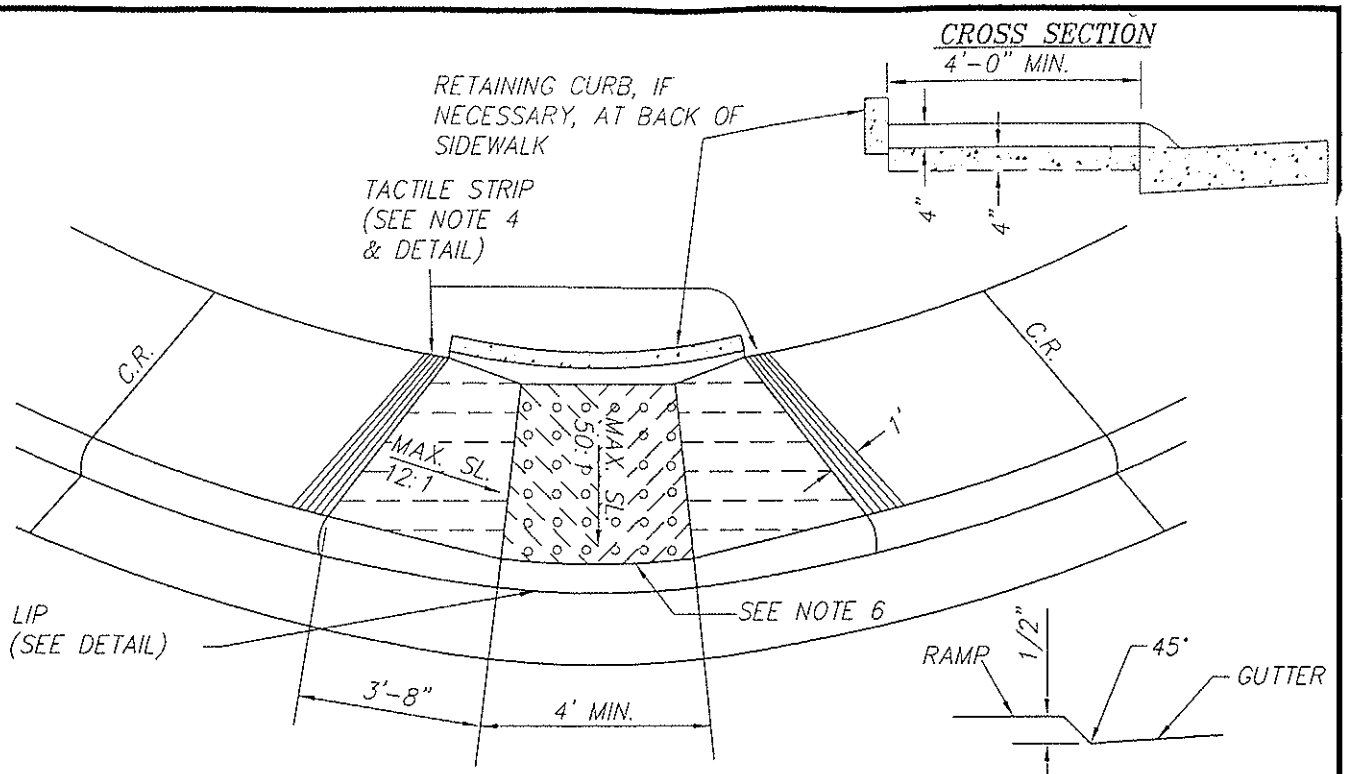

SIDEWALK RAMP AT CENTER OF CURB RETURN

TYPICAL DETAIL FOR LIP OF RAMP

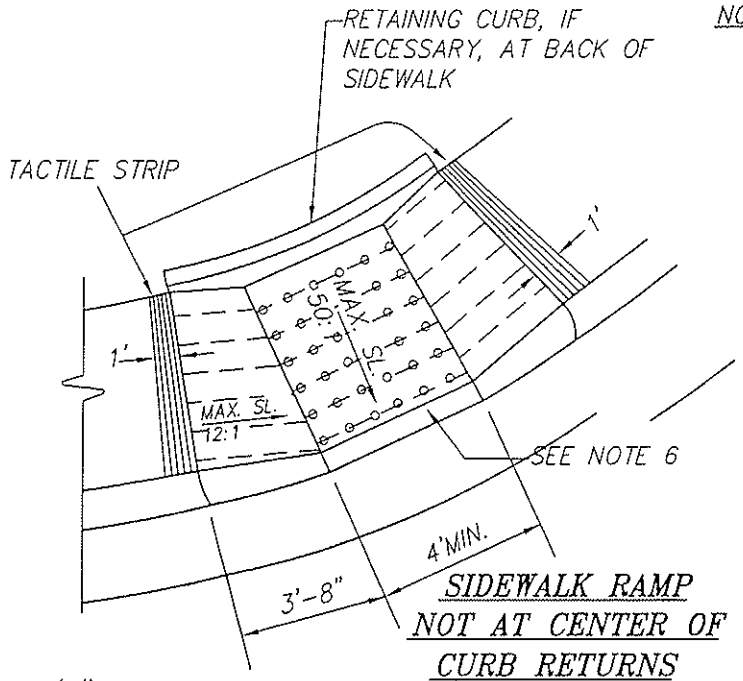

SIDEWALK RAMP NOT AT CENTER OF CURB RETURNS

NOTES:

1. TWO RAMPS SHALL BE INSTALLED AT EACH CORNER OF INTERSECTIONS OF STREETS OF 84' OR GREATER WHERE CONDITIONS PERMIT.
2. SINGLE RAMPS SHALL BE CONSTRUCTED AT THE CENTER OF CURB RETURNS FOR ALL OTHER INTERSECTIONS OR AS DETERMINED BY THE TOWN ENGINEER FOR SPECIAL CONDITIONS.
3. TRUNCATED DOMES PER STATE STD. PLAN RNSP A88-1. SEE SEC. 71-4 C.2 AND 71-5 OF STATE CONST. STDS. FOR REQUIRED PRODUCT OR APPROVED EQUAL INFORMATION.
4. RAMPS SHALL HAVE A HEAVY BROOM FINISH TRANSVERSE TO THE SLOPE OF THE RAMP AND A TACTILE STRIP 1' (ONE FT.) WIDE ALONG THE PERIMETER.
5. RETAINING CURB (TYPE 3) SHALL BE INSTALLED WHERE LOT SLOPE IS TOWARD THE SIDEWALK. (TO PREVENT SHEET FLOW ACROSS SIDEWALK)

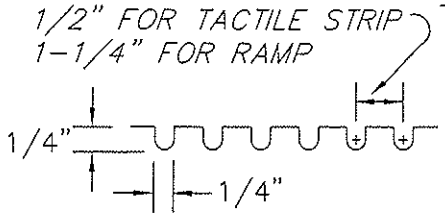

TYPICAL DETAIL FOR GROOVES

APPROVED BY: BRIAN J. FRAGIAO DIRECTOR OF PUBLIC WORKS/TOWN ENGINEER REVISED:		TOWN OF LOOMIS **SIDEWALK RAMPS FOR TYPE 2 CURBS** DEPARTMENT OF PUBLIC WORKS	**H-5**

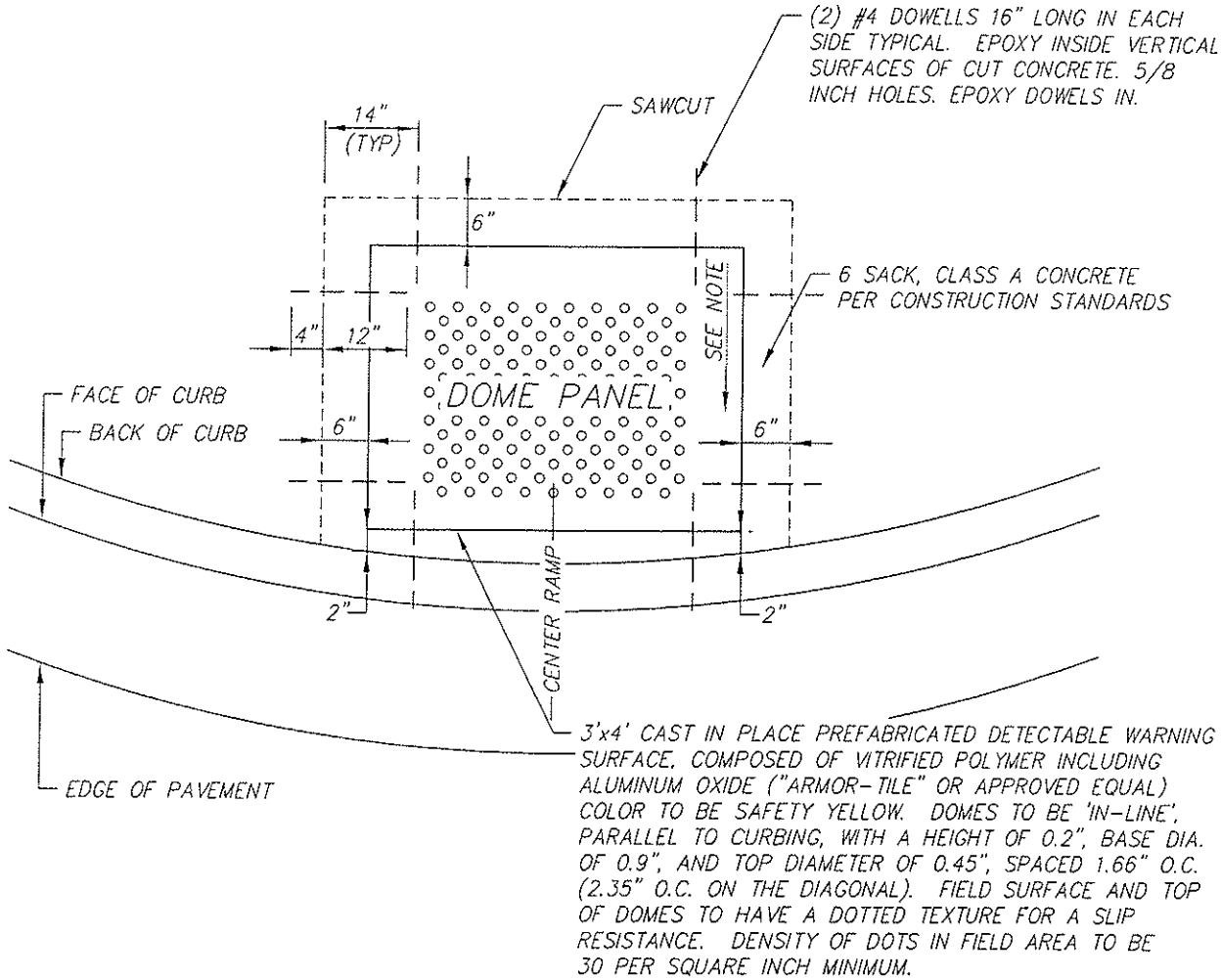

NOTE:
PRIOR TO RETROFITTING TRUNCATED DOME PANEL, ASSURE GRADES CONFORM TO CITY REQUIREMENTS.

APPROVED BY: BRIAN J. FRAGIAO DIRECTOR OF PUBLIC WORKS/TOWN ENGINEER REVISED:		TOWN OF LOOMIS **DETECTABLE WARNING (TRUNCATED DOME PANEL) RETROFIT OR REPLACEMENT** DEPARTMENT OF PUBLIC WORKS	**H-6**

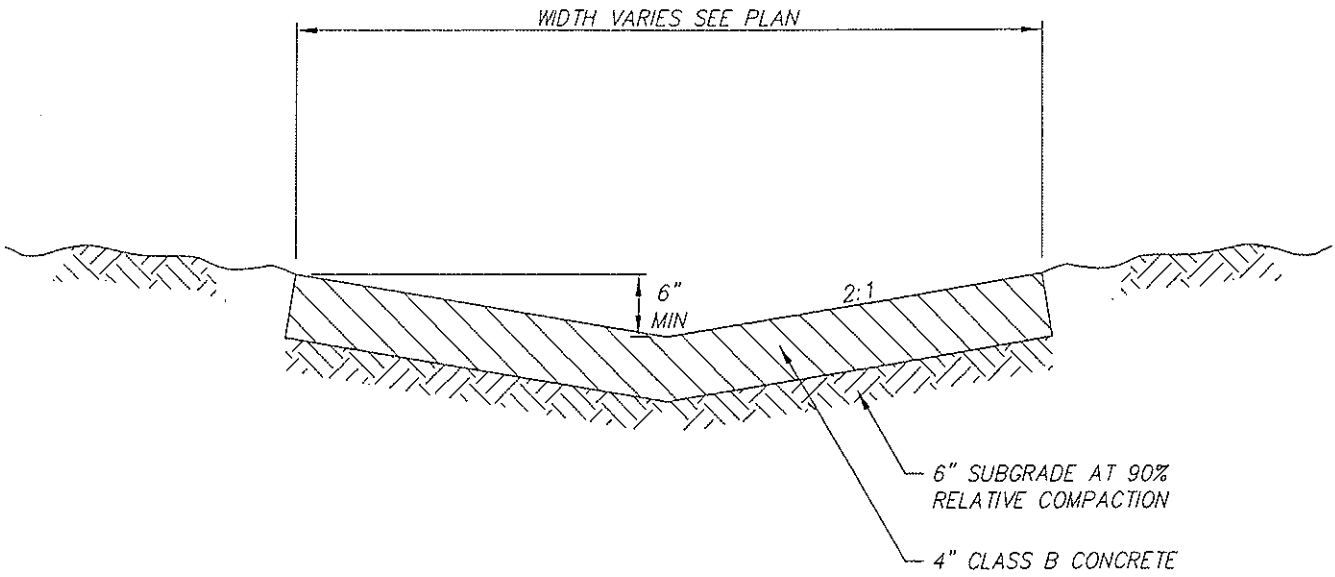

NOTES:

1. EXPANSION JOINTS AT 20 FT O.C.

APPROVED BY: BRIAN J. FRAGIAO DIRECTOR OF PUBLIC WORKS/TOWN ENGINEER REVISED:		TOWN OF LOOMIS **PAVED SWALE** DEPARTMENT OF PUBLIC WORKS	**H-7**

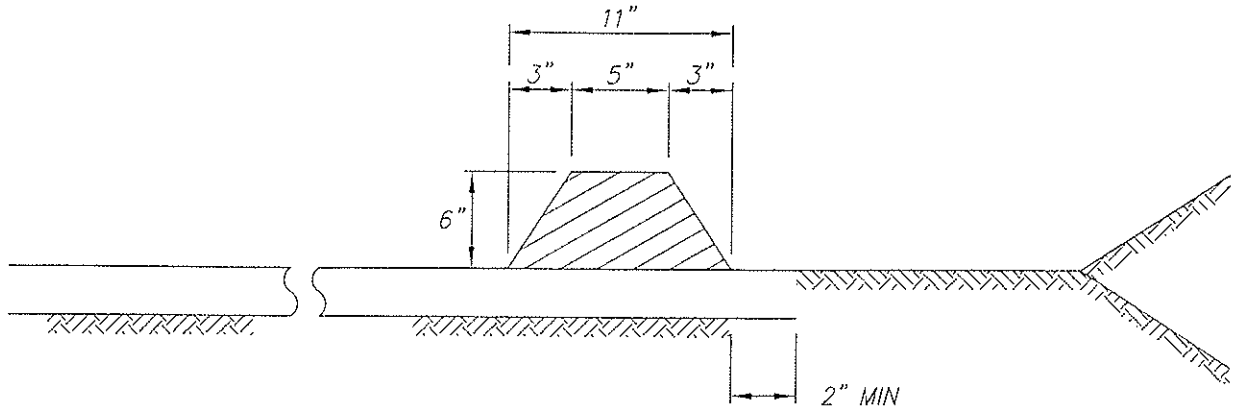

TYPE A

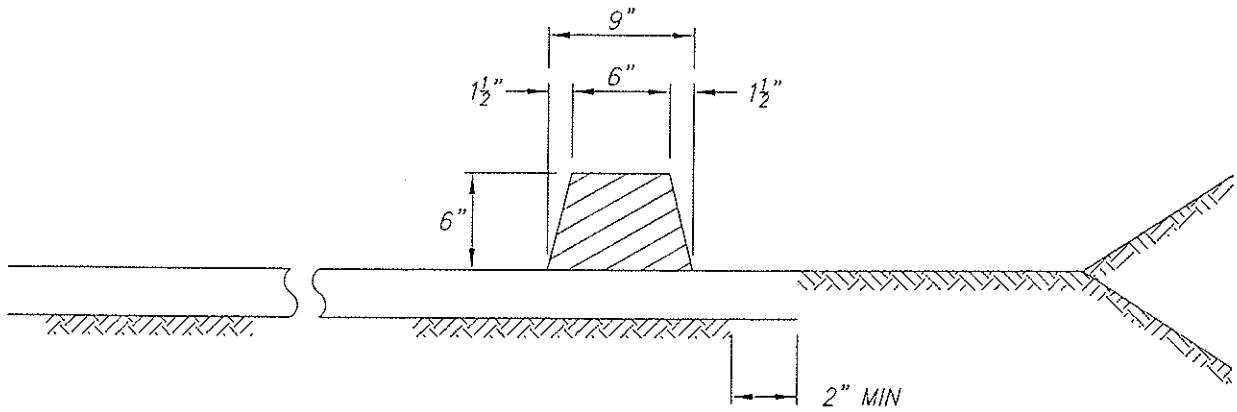

TYPE B

APPROVED BY:

BRIAN J. FRAGIAO
DIRECTOR OF PUBLIC WORKS/TOWN ENGINEER

REVISED:

TOWN OF LOOMIS

ASPHALT CONCRETE DIKE/BERM

DEPARTMENT OF PUBLIC WORKS

H-8

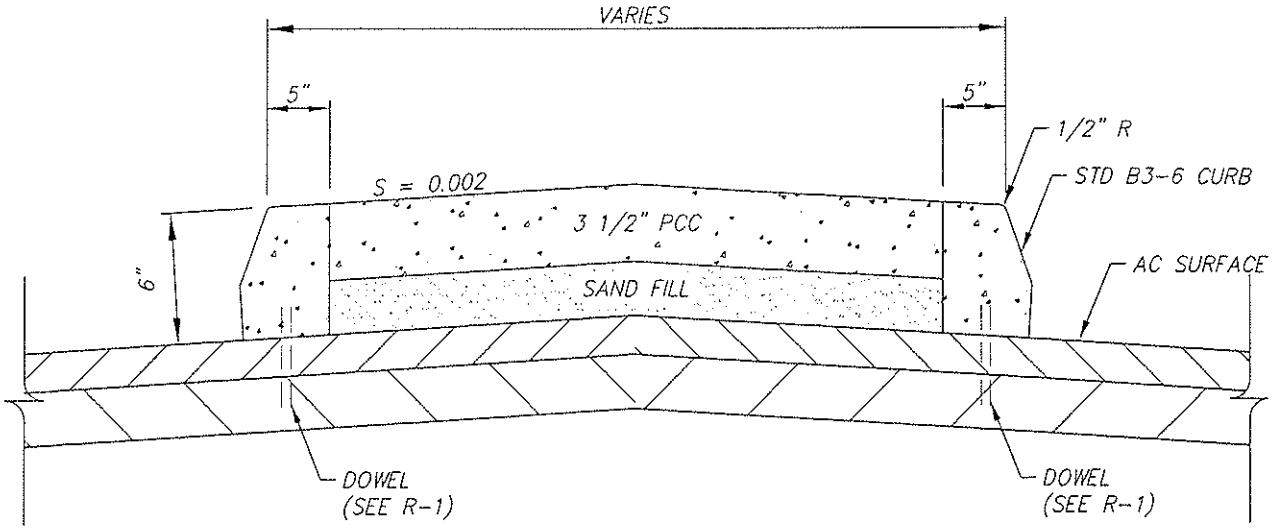

APPROVED BY:

BRIAN J. FRAGIAO
DIRECTOR OF PUBLIC WORKS/TOWN ENGINEER

REVISED:

TOWN OF LOOMIS

PAVED MEDIAN ISLAND

DEPARTMENT OF PUBLIC WORKS

H-9

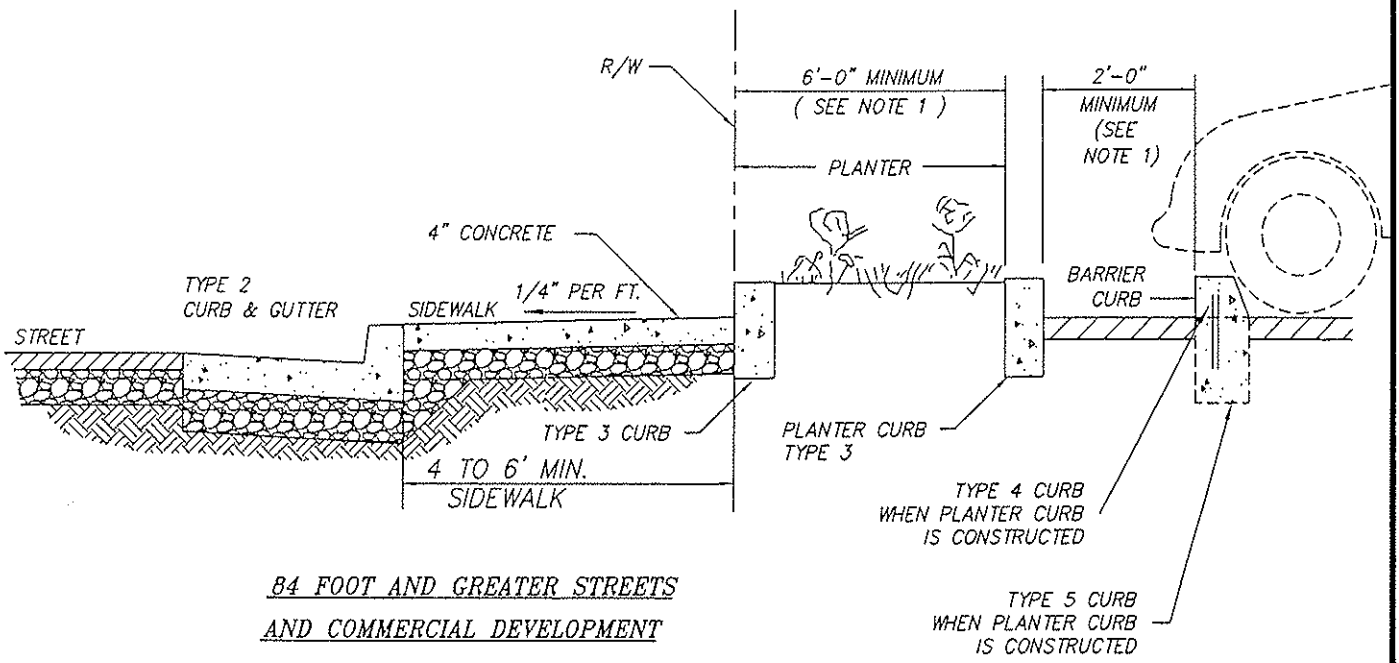

84 FOOT AND GREATER STREETS
AND COMMERCIAL DEVELOPMENT

NOTES:

1. PLANTER CURBS ARE OPTIONAL. IF REQUIRED PLANTER WIDTH IS INCREASED A MINIMUM OF 2'-6" OR MORE.
2. PLANTER CURBS MAY BE OMITTED ONLY IF LAWN IS PLANTED TO BACK OF SIDEWALK AND CONTINUOUS BARRIER CURB IS PLACED AT LOCATION SHOWN.

APPROVED BY: BRIAN J. FRAGIAO DIRECTOR OF PUBLIC WORKS/TOWN ENGINEER REVISED:		TOWN OF LOOMIS PLANTER AND BARRIER CURB DETAILS DEPARTMENT OF PUBLIC WORKS	H-10

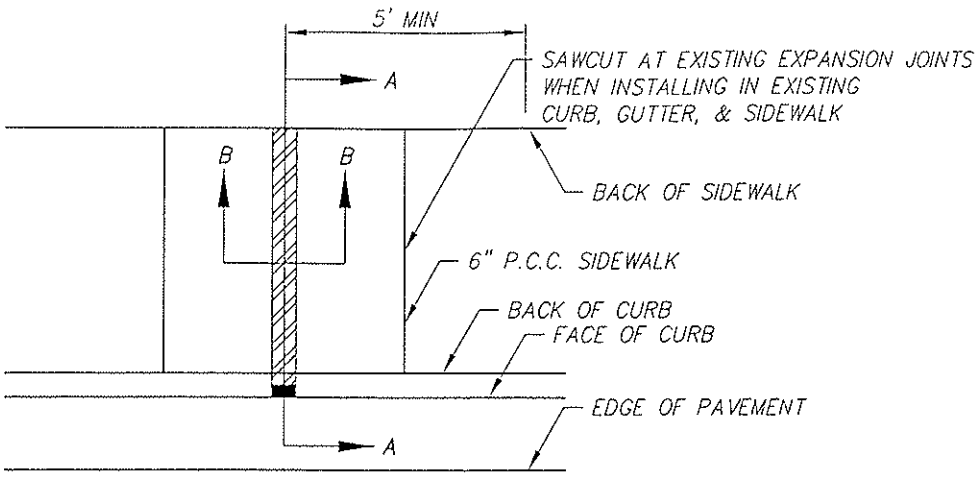

PLAN VIEW

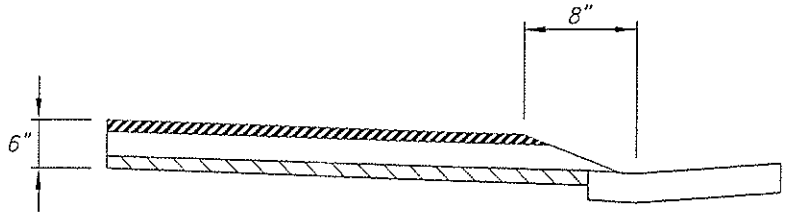

SECTION A–A

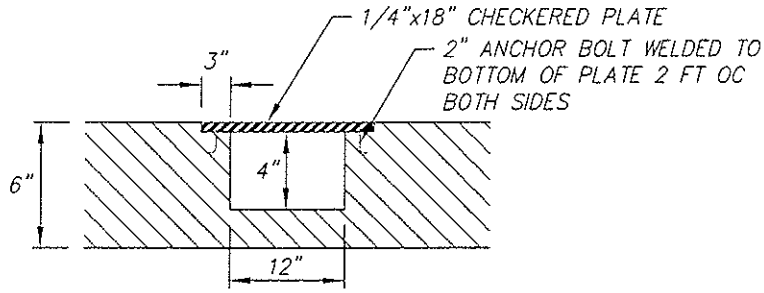

SECTION B–B

NOTES:

1. GALVANIZED FABRICATION AND ASSEMBLY.
2. FOR INSTALLATION N EXISTING SIDEWALK, SAWCUT 12 INCH. EACH SIDE OF DRAIN.

APPROVED BY: BRIAN J. FRAGIAO DIRECTOR OF PUBLIC WORKS/TOWN ENGINEER REVISED:		TOWN OF LOOMIS **UNDER SIDEWALK DRAIN** DEPARTMENT OF PUBLIC WORKS	**H–11**

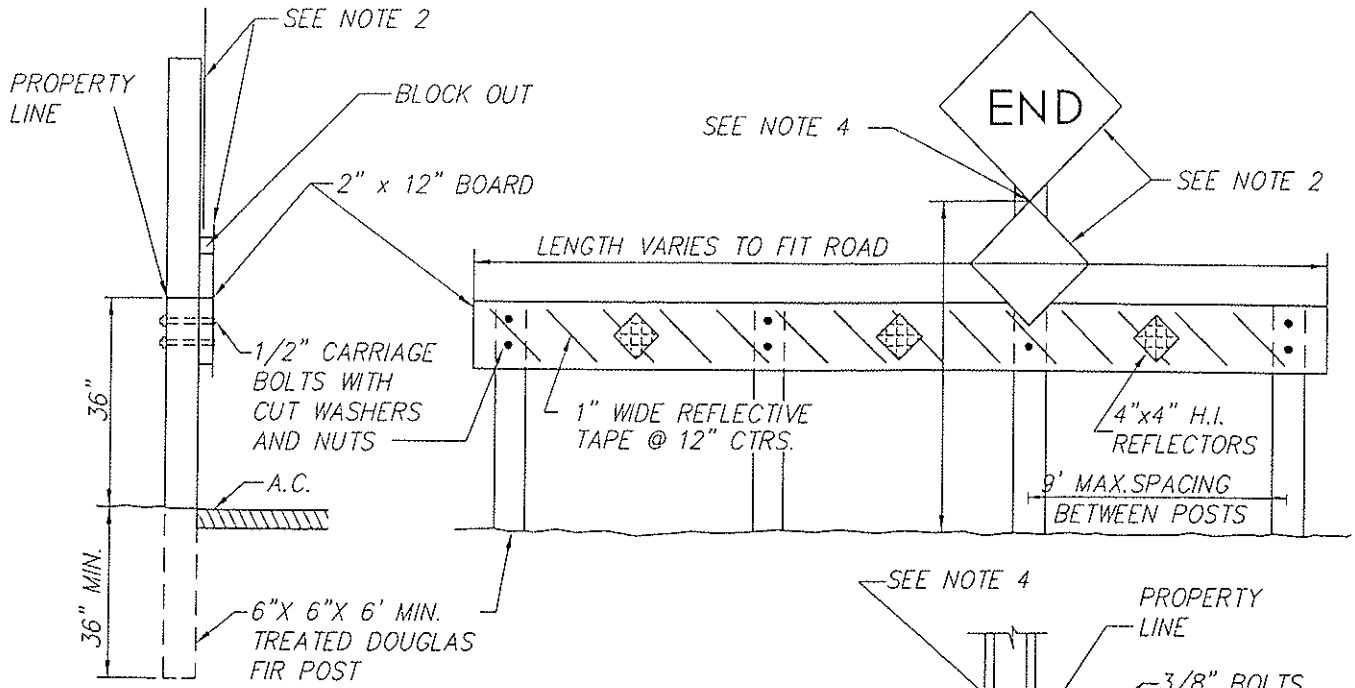

NUMBER AND SIZE OF SIGNS

R/W WIDTH	W31 SIGN		C2 SIGN	
	SIZE	NO.	SIZE	NO.
< 50'	24"	1	36" x 24"	1
50' – 60'	24"	2	48" x 30"	1
80' – 84'	24"	2	48" x 30"	1
100' – 110'	24"	2	48" x 30"	1

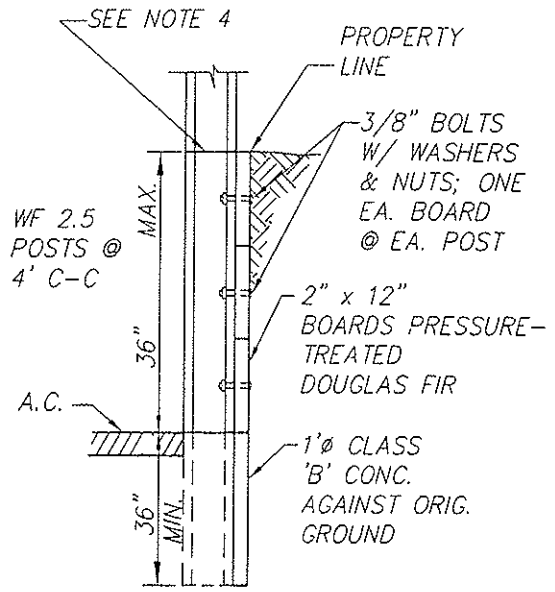

STREET ENDING IN CUT WHERE SLOPE NOT OBTAINABLE

NOTES:

1. WHERE PERMISSION HAS BEEN GRANTED TO CLOSE AN EXISTING PUBLIC STREET, TO TRAFFIC, A C2 "ROAD CLOSED" SIGN MAY BE REQUIRED ON THE CENTERLINE OF THE ROAD IN ADDITION TO THE W31 "END" SIGNS.
2. 24" x 24" W31 SIGNS AND 18" x 18" RED TYPE N MARKERS. BLOCK OUT AS NECESSARY FOR TYPE N MARKER TOP MOUNTING BOLT (BOTTOM MOUNTING BOLT NORMALLY THROUGH BARRIER RAIL. RED TYPE N MARKERS TO HAVE SOLID RED REFLECTIVE BACKGROUND W/O ADDED REFLECTORS.
3. ALL EXPOSED SURFACES SHALL BE PAINTED WITH 2 (TWO) COATS OF WHITE PAINT CONFORMING TO SECTION 91-3.02 OF THE STATE SPECIFICATIONS.
4. POST AT CENTER OR NEAREST TO CENTER ON RIGHT HAND SIDE TO BE EXTENDED TO PROVIDE MOUNTING FOR SIGNS.
5. POST SHALL BE PRESSURE TREATED PER STATE SPEC. 58-1.02

APPROVED BY:

BRIAN J. FRAGIAO
DIRECTOR OF PUBLIC WORKS/TOWN ENGINEER

REVISED:

TOWN OF LOOMIS

STREET CLOSURE TIMBER BARRICADE

DEPARTMENT OF PUBLIC WORKS

H-12

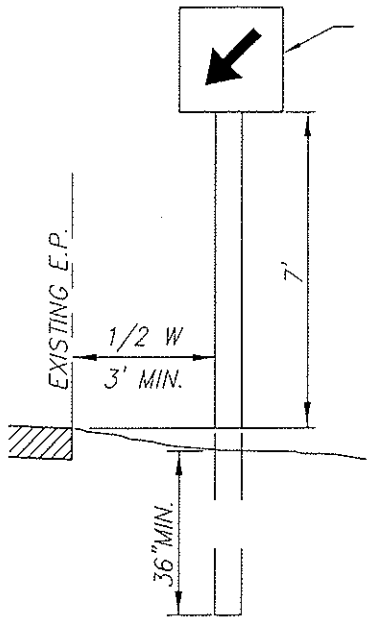

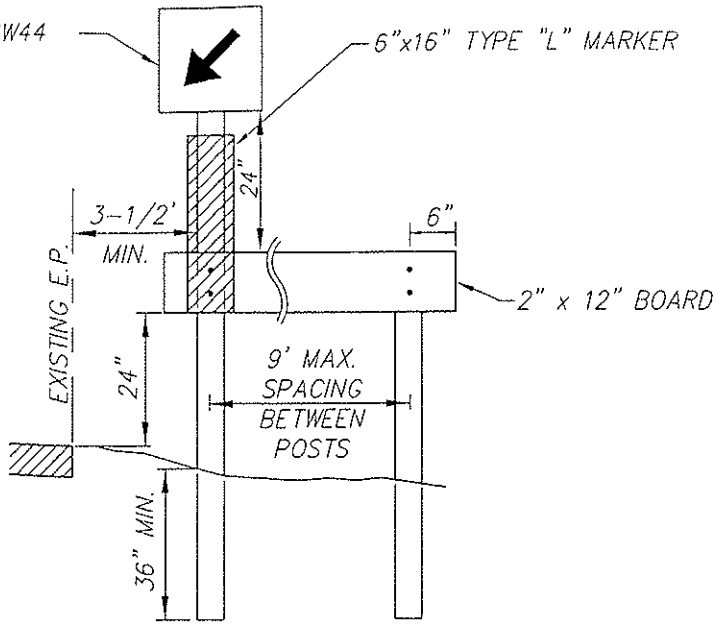

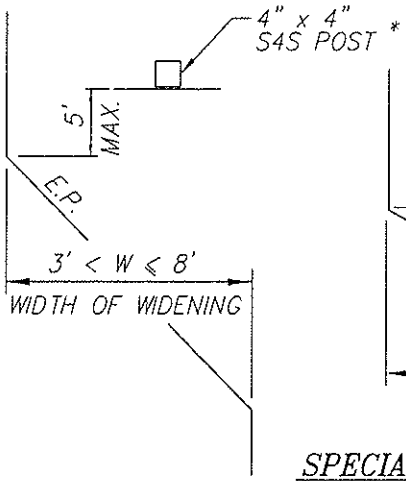

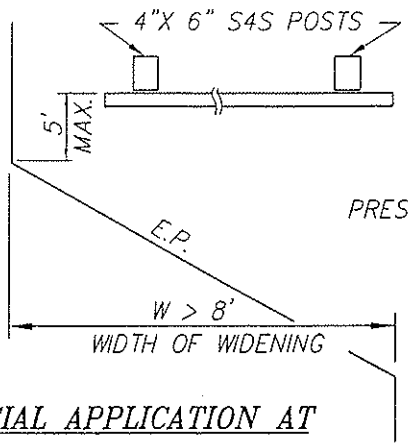

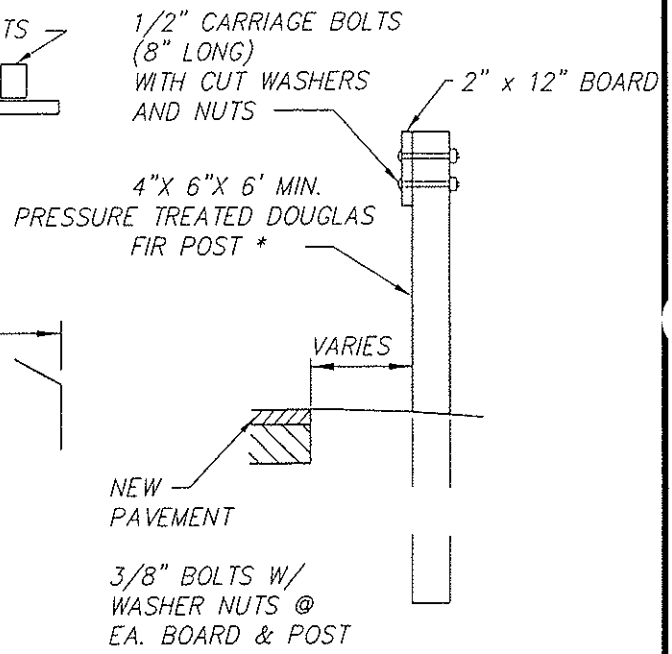

SPECIAL APPLICATION AT DIRECTION OF ENGINEER

**W4-2 IN LIEU OF TYPE F DELINEATOR AT DIRECTION OF ENGINEER.

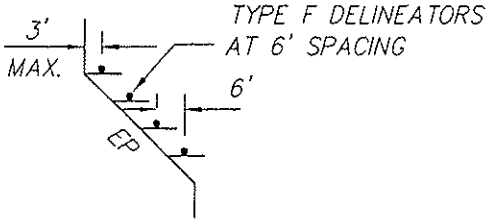

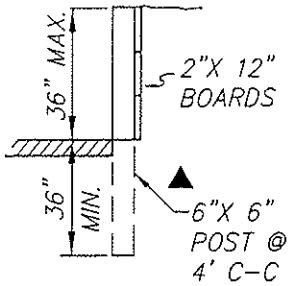

STREET WIDENING AT CUT WHERE SLOPE NOT OBTAINABLE

▲ POST AT SIDE NEAREST THE EDGE OF PAVEMENT TO BE OF SUFFICIENT HEIGHT TO PROVIDE FOR THE MOUNTING OF REQUIRED SIGNS.

ALL EXPOSED SURFACES SHALL BE PAINTED WHITE IN CONFORMANCE WITH THE REQUIREMENTS OF SECTIONS 91-3.01 AND 91-3.02 OF THE STATE STANDARD SPECIFICATIONS.

* STATE OF CALIFORNIA SPECIFICATIONS 58-1.02

APPROVED BY: BRIAN J. FRAGIAO DIRECTOR OF PUBLIC WORKS/TOWN ENGINEER REVISED:		TOWN OF LOOMIS **SIGNS AND BARRICADES AT END OF PAVEMENT WIDENING** DEPARTMENT OF PUBLIC WORKS	**H-13**

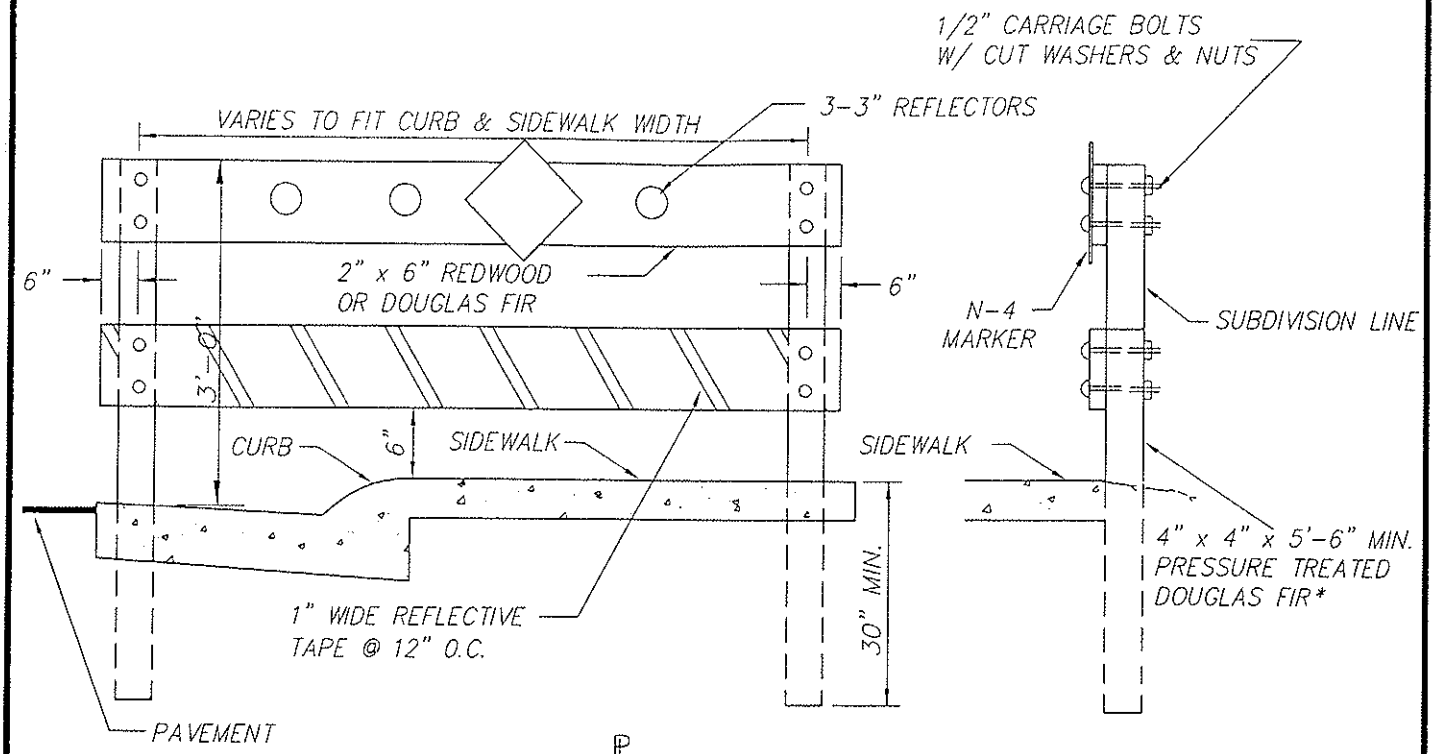

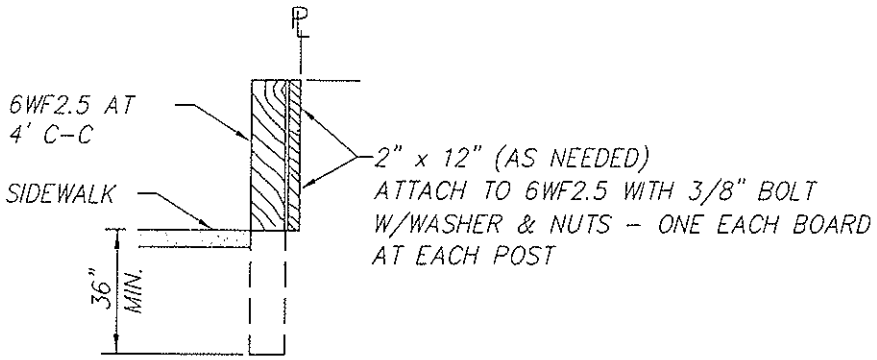

STREET ENDING IN CUT WHERE SLOPE NOT OBTAINABLE

NOTES:

1. SIDEWALK BARRICADES TO BE ERECTED AT EACH LOCATION WHERE SATISFACTORY PROVISION CAN NOT BE MADE FOR PEDESTRIANS TO CONTINUE BEYOND THE TERMINUS OF A SIDEWALK.
2. ALL EXPOSED SURFACES TO BE PAINTED WITH TWO (2) COATS OF WHITE PAINT CONFORMING TO SECTION 91-3.02 OF STATE SPECIFICATIONS.

* STATE OF CALIF. SPECIFICATION #58-1.02

APPROVED BY: BRIAN J. FRAGIAO DIRECTOR OF PUBLIC WORKS/TOWN ENGINEER REVISED:		TOWN OF LOOMIS **SIDEWALK BARRICADE** DEPARTMENT OF PUBLIC WORKS	**H-14**

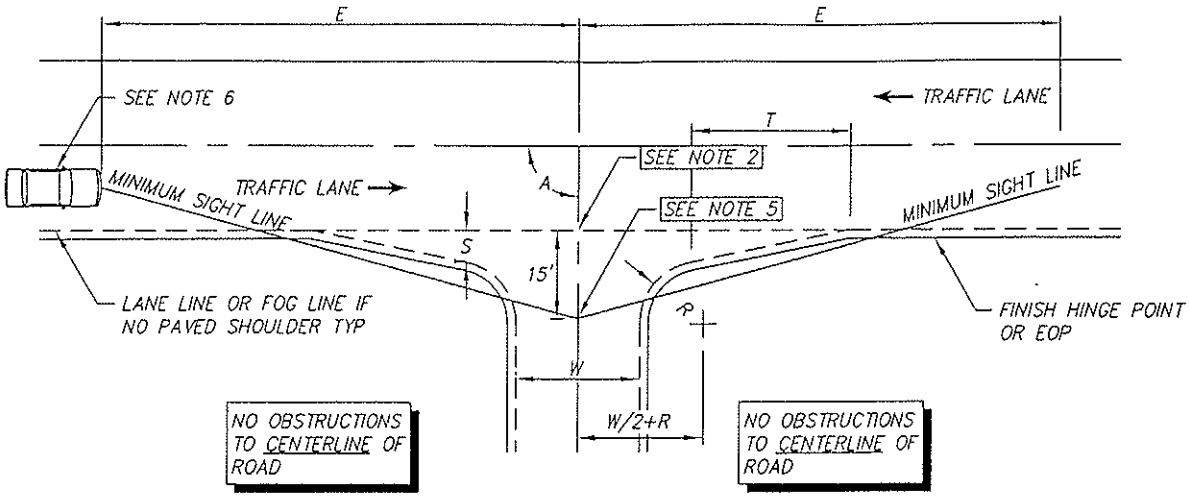

NOTES:

1. INTERSECTING ROW LINES AT ROADWAY CONNECTIONS SHALL BE JOINED BY A 25 FT OR GREATER RADIUS CURVE TO ALLOW FOR ROADWAY IMPROVEMENTS.
2. SETBACK = 15 FT MIN. FROM EDGE OF TRAVELED WAY. THIS ASSUMED 6 FT TO STOP BAR, 1 FT FOR STOP BAR, AND 8 FT FROM THE FRONT OF BUMPER TO THE DRIVER. THIS SETBACK MAY BE REQUIRED TO BE INCREASED UP TO 30 FT DUE TO INTERSECTION LAYOUT.
3. IN BOTH DIRECTIONS OF TRAVEL ALONG THE CROSSROAD, SIGHT DISTANCE (E) IS TO BE MEASURED ALONG THE CROSSROAD CL FOR TWO LANE CROSSROADS, AND ALONG THE CL OF THE NEAREST LANE TO THE ROAD FOR MULTI-LANE ROADS.
4. WHERE RESTRICTIVE CONDITIONS DO NOT ALLOW COMPLIANCE WITH THE SPECIFIED SIGHT DISTANCE REQUIREMENTS, THE ENGINEER MAY APPROVE A REDUCTION OF THE CORNER SIGHT DISTANCE TO THE MINIMUM STOPPING SIGHT DISTANCE AS OUTLINED IN THE CALTRANS HIGHWAY DESIGN MANUAL.
5. DRIVER'S EYE LOCATION ASSUMED TO BE 3.5' ABOVE PAVEMENT.
6. ASSUMED TO BE 4.25' ABOVE THE PAVEMENT.

RESIDENTIAL DESIGN SPEED SERVING LESS THAN 5 LOTS (mph)								
	25	30	35	40	45	50	55	60
A	60' TO 120'							
E	275'	330'	385'	440'	495'	550'	605'	660'
S	3'	3'	3'	3'	4'	4'	5'	5'
R	15'	15'	20'	20'	25'	25'	25'	25'
T	VARIABLE – 25 FT. MIN.							
W	AS APPROVED							

MULTIPLE RESIDENTIAL DESIGN SPEED COMMERCIAL & OR PUBLIC SERVING 5 OR MORE LOTS (mph)								
	25	30	35	40	45	50	55	60
A	80' TO 100'							
E	275'	330'	385'	440'	495'	550'	605'	660'
S	8'	8'	12'	12'	12'	12'	12'	12'
R	25'	30'	35'	40'	45'	50'	50'	50'
T	50'	75'	100'	150'	200'	250'	250'	250'
W	CONFORM TO ROAD SECTION							

APPROVED BY:

BRIAN J. FRAGIAO
DIRECTOR OF PUBLIC WORKS/TOWN ENGINEER

REVISED:

TOWN OF LOOMIS
ROADWAY CONNECTIONS
SHEET 1

DEPARTMENT OF PUBLIC WORKS

H-15

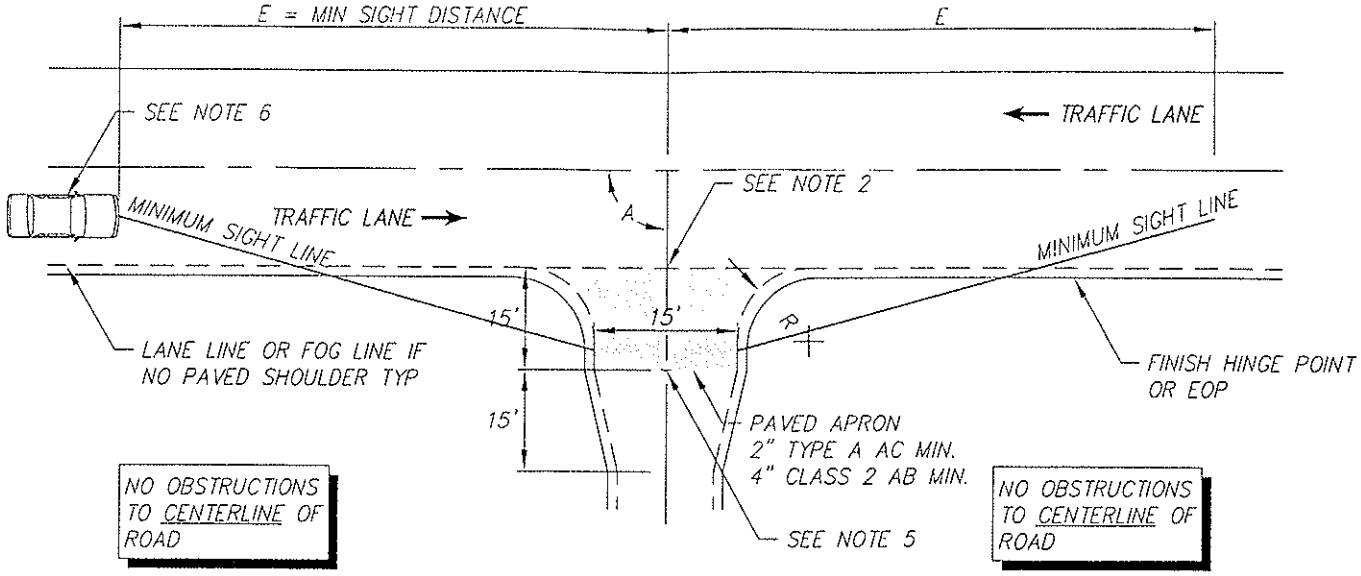

NOTES:

1. THIS PLATE IS ONLY TO BE USED WITH SINGLE RESIDENTIAL DRIVEWAYS CONNECTING TO ROADS WITH DESIGN SPEEDS OF 25 MPH OR LESS. SHARED RESIDENTIAL DRIVEWAYS SHALL BE DESIGNED TO MEET REQUIREMENTS OUTLINED IN SHEET 1. SINGLE RESIDENTIAL DRIVEWAYS CONNECTING TO ROADS WITH DESIGN SPEEDS ABOVE 25 MPH AND ALL OTHER CONNECTING DRIVES AND ROADS SHALL BE DESIGNED TO MEET THE APPLICABLE REQUIREMENTS OF SHEET 1.

2. SETBACK = 15 FT MIN. FROM EDGE OF TRAVELED WAY. THIS ASSUMED 6 FT TO STOP BAR, 1 FT FOR STOP BAR, AND 8 FT FROM THE FRONT OF BUMPER TO THE DRIVER. THIS SETBACK MAY BE REQUIRED TO BE INCREASED UP TO 30 FT DUE TO INTERSECTION LAYOUT.

3. IN BOTH DIRECTIONS OF TRAVEL ALONG THE CROSSROAD, SIGHT DISTANCE (E) IS TO BE MEASURED ALONG THE CROSSROAD CL FOR TWO LANE CROSSROADS, AND ALONG THE CL OF THE NEAREST LANE TO THE ROAD FOR MULTI-LANE ROADS.

4. THE RETURN RADIUS (R) SHALL BE DESIGNED SUCH THAT EMERGENCY FIRE VEHICLE ACCESS IS PROVIDED FOR BOTH DIRECTIONS WITHOUT REQUIRING THE VEHICLE TO SWING INTO OPPOSING TRAFFIC LANES. THE MINIMUM RADIUS SHALL BE 10 FT.

5. DRIVER'S EYE LOCATION ASSUMED TO BE 3.5' ABOVE PAVEMENT.

6. ASSUMED TO BE 4.25' ABOVE THE PAVEMENT.

	SINGLE FAMILY RESIDENTIAL DRIVEWAY CONNECTING TO ROADS WITH DESIGN SPEED ≤ 25 mph
A	60° TO 120°
E	200'
R	10 FT MIN – SEE NOTE 4

APPROVED BY:

BRIAN J. FRAGIAO
DIRECTOR OF PUBLIC WORKS/TOWN ENGINEER

REVISED:

TOWN OF LOOMIS

ROADWAY CONNECTIONS SHEET 2

DEPARTMENT OF PUBLIC WORKS

H-16

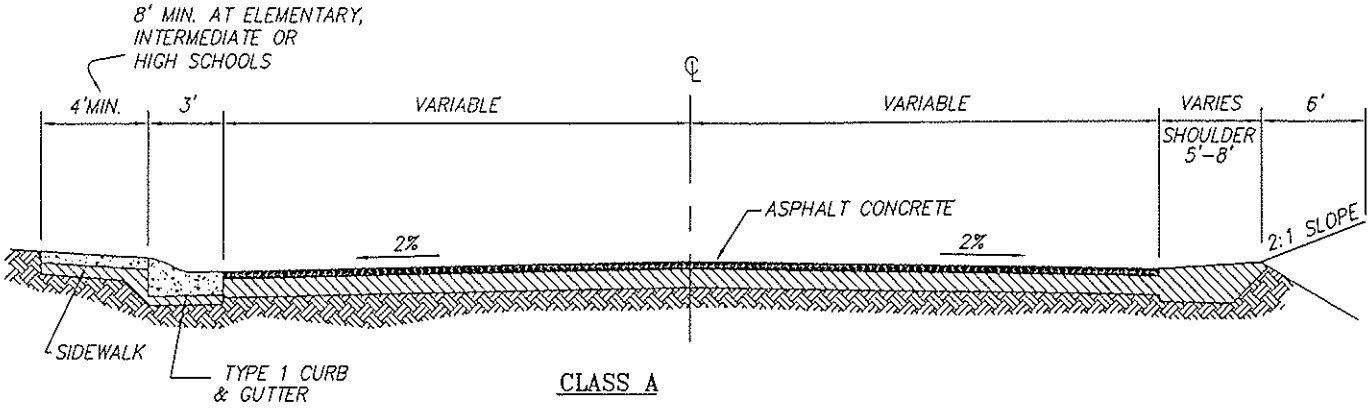

CLASS A

CLASS B

SAME AS CLASS A – EXCEPT SIDEWALKS MAY BE OMITTED

NOTES:

1. DESIGN AND CONSTRUCTION SHALL BE SUBJECT TO THE APPROVAL OF THE PUBLIC WORKS DEPARTMENT.
2. COBBLE TO BE USED IN DITCHES AS SPECIFIED BY TOWN ENGINEER.

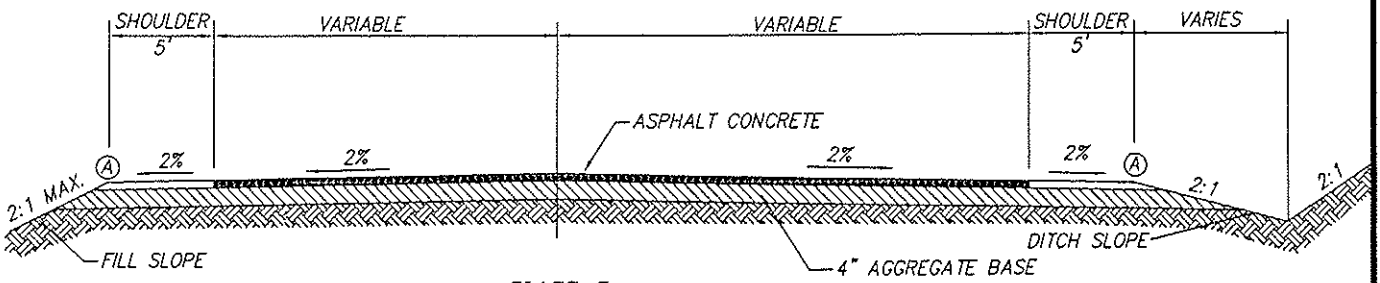

CLASS C

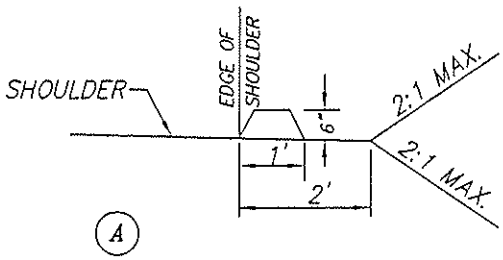

APPROVED BY:

BRIAN J. FRAGIAO
DIRECTOR OF PUBLIC WORKS/TOWN ENGINEER

REVISED:

TOWN OF LOOMIS

STREET CLASSES
"A", "B" & "C"

DEPARTMENT OF PUBLIC WORKS

H-17

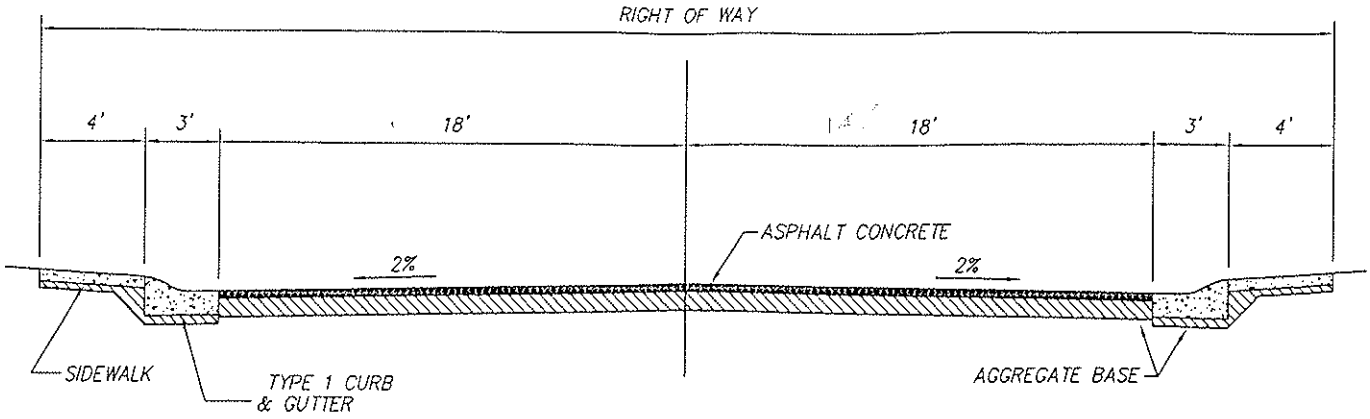

NOTE: TYPE 1 CURB & GUTTER MAY BE USED IN SINGLE FAMILY DEVELOPMENTS

50 FOOT STREET

(MINOR AND PRIMARY RESIDENTIAL)

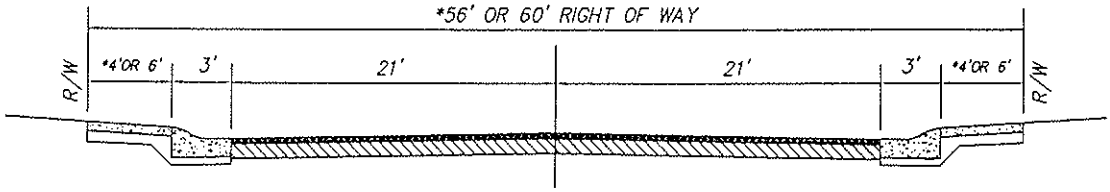

56 OR 60 FOOT STREET

(COLLECTOR INDUSTRIAL/COMMERCIAL)
(NO PARKING/BIKE LANES)

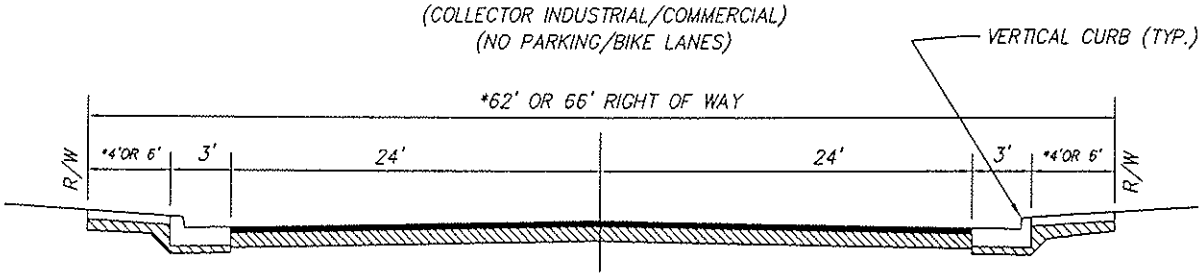

62 OR 66 FOOT STREET

(COLLECTOR INDUSTRIAL/COMMERCIAL)
(2 LANE TWO-WAY LEFT TURN)
(ON STREET PARKING/NO BIKE LANES)

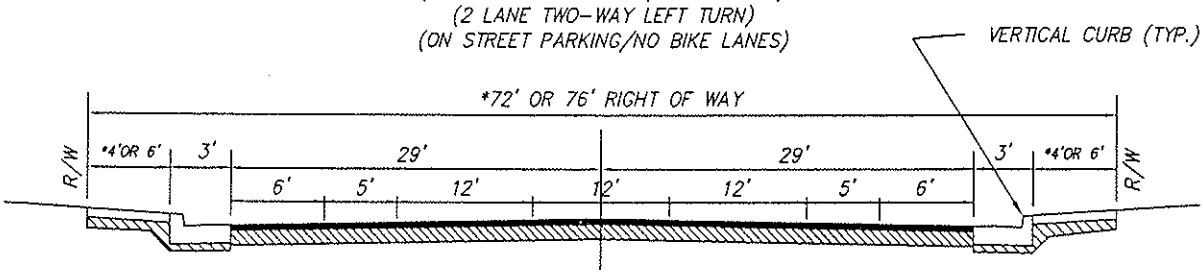

72 OR 76 FOOT STREET

(COLLECTOR APPROACH TO 84 AND 110 FOOT STREETS)
ON-STREET PARKING AND BIKE LANE)

NOTES:

1. *SIDEWALK MAY BE BE 4' WIDE ONLY IN SINGLE FAMILY & DUPLEX RESIDENTIAL AREAS, AND INDUSTRIAL AREAS.
2. VERTICAL CURB (TYPE 2) REQUIRED AS SPECIFIED IN IMPROVEMENT STANDARDS

APPROVED BY: BRIAN J. FRAGIAO DIRECTOR OF PUBLIC WORKS/TOWN ENGINEER REVISED:		TOWN OF LOOMIS TYPICAL SECTIONS: RESIDENTIAL STREETS COLLECTOR STREETS INDUSTRIAL & COMMERCIAL DEPARTMENT OF PUBLIC WORKS	H-18

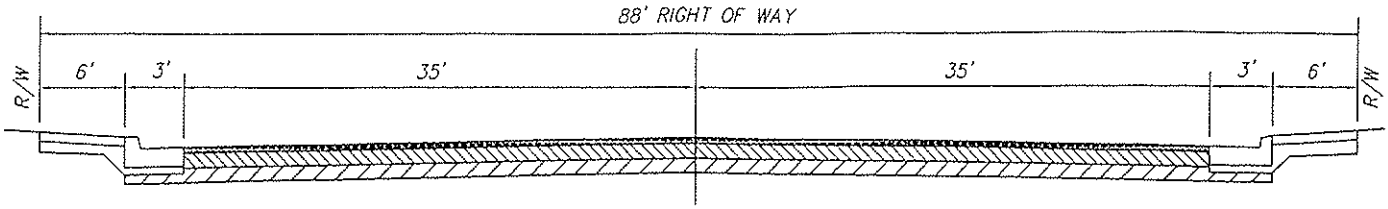

88 FOOT STREET

(MINOR ARTERIAL)
(4 LANE – ADD 12' FOR ON-STREET PARKING)
(ADD 12' FOR EACH ACCEL/DECEL LANE)

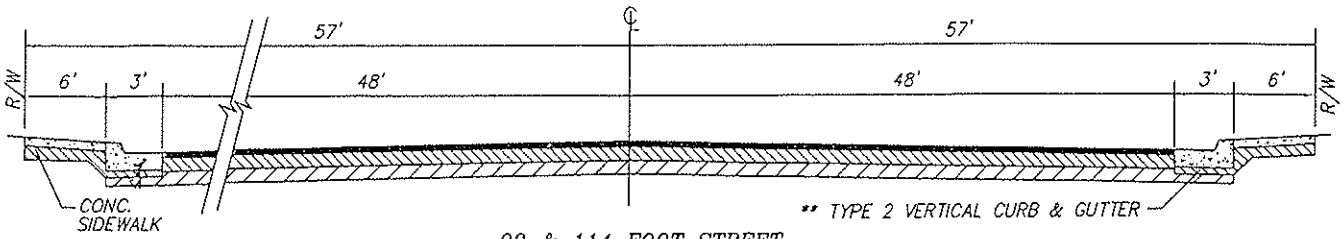

90 & 114 FOOT STREET

(MAJOR/MINOR ARTERIAL)

** TYPE 2 CURB & GUTTER REQUIRED AS SPECIFIED IN IMPROVEMENT STANDARDS

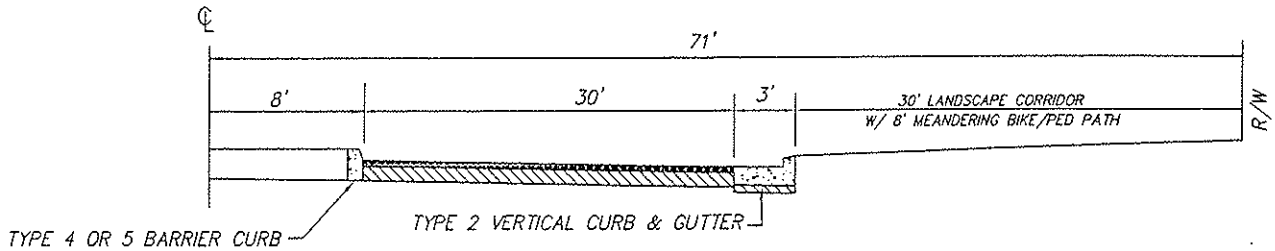

142 FOOT LANDSCAPED STREET (HALF SECTION)

(MAJOR ARTERIAL)

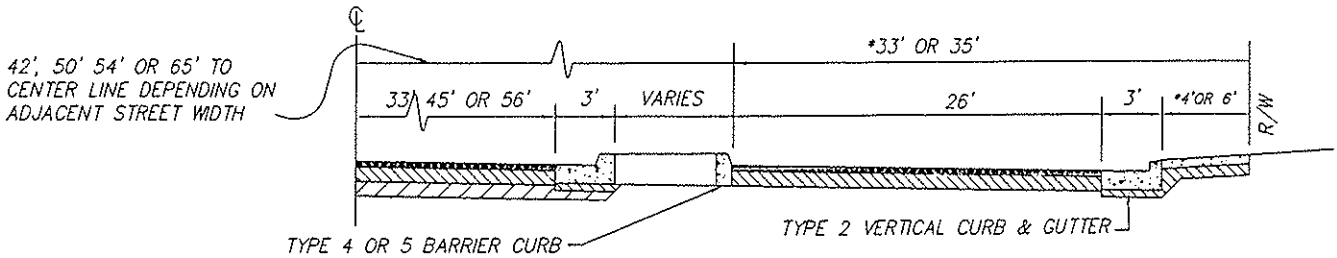

FRONTAGE ROAD

NOTES:

1. *SIDEWALK MAY BE 4' WIDE ONLY IN SINGLE FAMILY & DUPLEX RESIDENTIAL AREAS ONLY.
2. R/W TO BE MOVED BACK OF CURB FOR MEANDERING SIDEWALKS.

APPROVED BY: BRIAN J. FRAGIAO DIRECTOR OF PUBLIC WORKS/TOWN ENGINEER REVISED:		TOWN OF LOOMIS TYPICAL SECTIONS ARTERIAL & FRONTAGE RD. DEPARTMENT OF PUBLIC WORKS	H-19

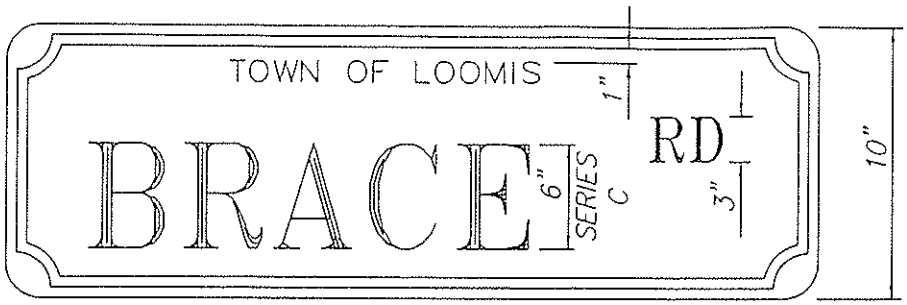

STREET NAME SIGN DETAIL

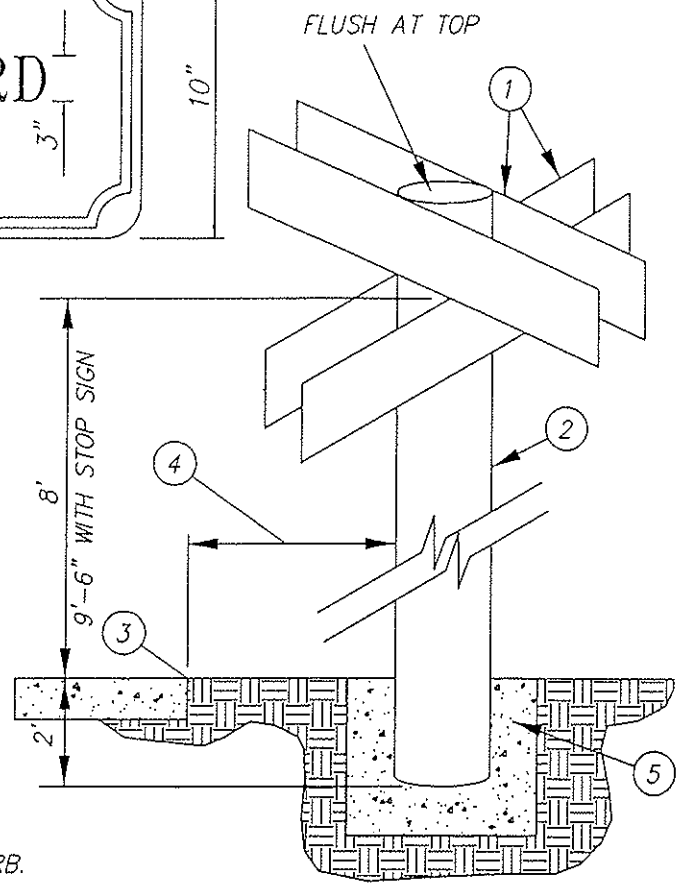

NOTES:

1. STREET NAME SIGNS.
2. 2" GALVANIZED STEEL PIPE.
3. BACK OF SIDEWALK
4. 18 INCHES BACK OF WALK, 24 INCHES BACK OF CURB.
5. TWO SACK CONCRETE IN POST HOLE.
6. BLANK: EIGHT INCH HIGH, 0.080 GAUGE ALUMINUM, 24, 30 OR 36 INCHES LONG. FINISH: REFLECTORIZED, BLUE, HIGH INTENSITY BACKGROUND, SHEETED WITH, 3M ELECTRONIC CUTABLE WHITE FILM (OR AS APPROVED EQUAL BY THE ENGINEER), SIGN ATTACHMENT: (2) 5/16 INCH GALVANIZED MACHINE BOLTS/NUTS (THROUGH POST).
7. UPPER AND LOWER CASE LETTERS, SIX INCHES HIGH, THESE AND ALL TEXT ON THIS SIGN SHALL BE HIGH INTENSITY WHITE.
8. BLOCK NUMBER, 1 3/4 INCHES HIGH, SERIES C, HIGHWAY FONT.
9. ST, AVE, CT, WY, CIRCLE, DR, ETC., TWO INCH UPPER CASE SERIES C, HIGHWAY FONT.
10. ARROW, 1 3/4 INCHES BY VARIABLE LENGTH, HIGHWAY FONT.
11. BLANK: TEN INCHES HIGH, 0.080 GAUGE ALUMINUM, 24, 30, OR 36 INCHES LONG, FINISH: BLUE REFLECTIVE BACKGROUND. ALL BACKGROUND AND TEXT ON THIS SIGN SHALL BE ENGINEER GRADE REFLECTIVE, ATTACHMENT: (2) 5/16 INCH GALVANIZED MACHINE BOLTS WITH NUTS (THROUGH POST). IN THE EVENT THE STREET NAME IS TOO LONG FOR THE SIGN, SERIES B TEXT SHALL BE USED IN LIEU OF SERIES C.
12. FOUR INCH HIGH, SERIES C, UPPER CASE LETTERS, HIGHWAY FONT.
13. TWO INCH HIGH, SERIES C, UPPER CASE LETTERS, HIGHWAY FONT.

NOTE:
POST AND MOUNTING REQUIREMENTS FOR ALL OTHER TRAFFIC SIGNS SHALL BE THE SAME AS ABOVE UNLESS OTHERWISE SPECIFIED ON THE APPROVED PLANS. STREET LIGHT MASTS MAY BE USED IN LIEU OF POSTS UPON THE APPROVAL OF THE TOWN ENGINEER.

APPROVED BY: BRIAN J. FRAGIAO DIRECTOR OF PUBLIC WORKS/TOWN ENGINEER REVISED:		TOWN OF LOOMIS STREET SIGN NAME DEPARTMENT OF PUBLIC WORKS	H-20

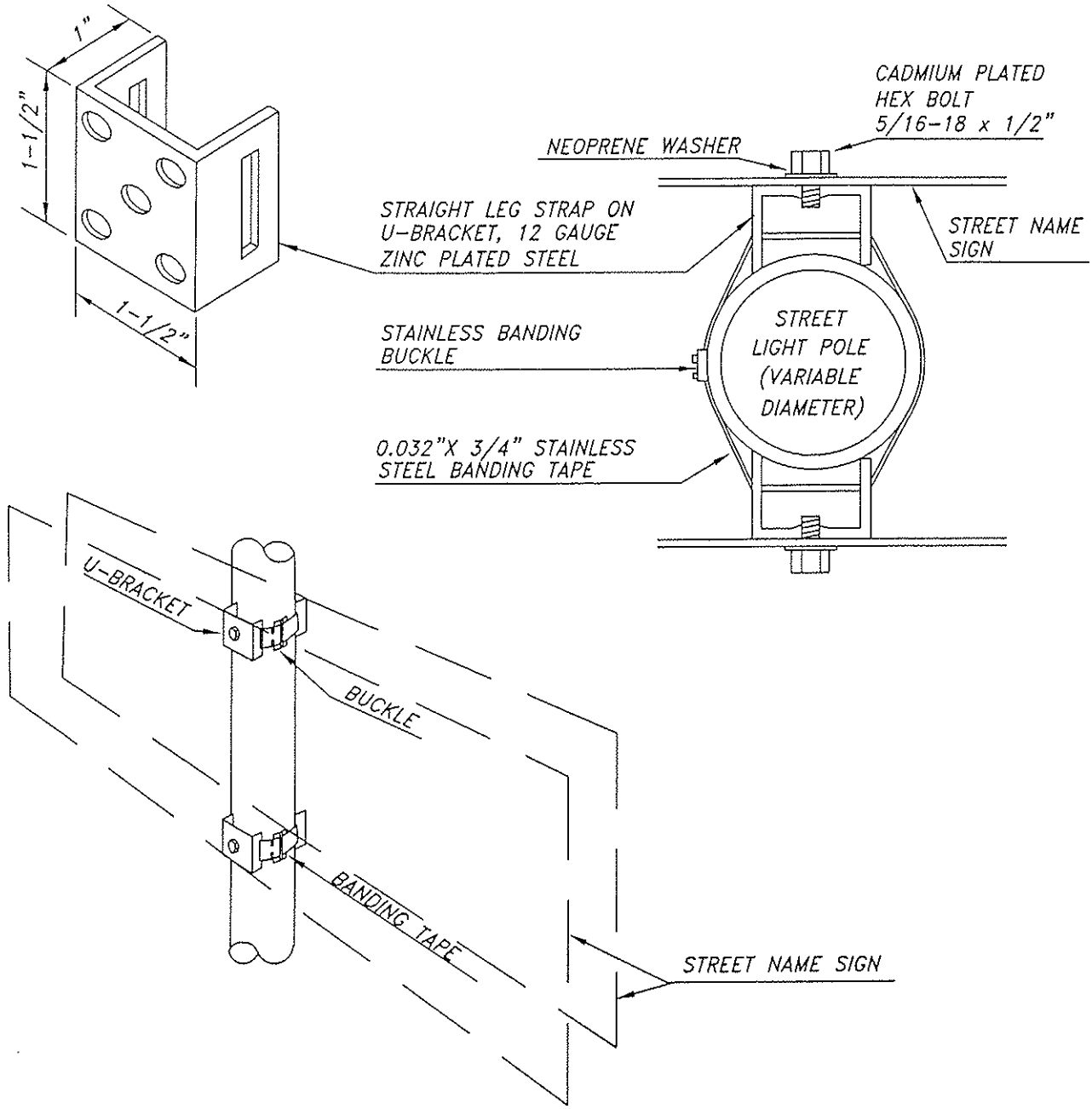

NOTE: DETAIL SHOWN IS FOR TWO SIGN INSTALLATION. FOUR SIGN INSTALLATION MAY BE MADE, WHERE APPLICABLE, BY FASTENING A SECOND PAIR OF SIGNS IN THE SAME MANNER.

STANDARD CLEARANCE TO BOTTOM OF LOWEST SIGN IS 7 FEET.

APPROVED BY: BRIAN J. FRAGIAO DIRECTOR OF PUBLIC WORKS/TOWN ENGINEER REVISED:		TOWN OF LOOMIS STREET NAME SIGN INSTALLATION ON STREET LIGHT POLE DEPARTMENT OF PUBLIC WORKS	H-21

2-WAY ASSEMBLY
(USE W/ 2 STREET BLADES SINGLE FACED)

(1) CAP 2" SINGLE FACE 2-WAY
(1) 2-WAY ROD 6" BLADE (7 1/2")
(1) 2-WAY ROD 8" BLADE (9 1/2")
(2) SINGLE FACE PLAIN SEPARATOR
(1) DOME NUT FOR SINGLE FACE
(2) 3/16" X 1/2" SIGN END BOLT SET

4-WAY ASSEMBLY
(USE W/ 4 STREET BLADES SIGLE FACED)

(1) CAP 2" SINGLE FACE 2-WAY
(1) 4-WAY ROD 6" BLADE (13 1/2")
(1) 4-WAY ROD 8" BLADE (17 1/2")
(1) 4-WAY ROD 9" BLADE (19 1/2")
(2) SINGLE FACE PLAIN SEPARATOR
(2) SINGLE FACE LOCKING SEPARATOR
(1) DOME NUT FOR SINGLE FACE
(4) 3/16" X 1/2" SIGN END BOLT SET

ADDITIONAL HARDWARE
THEFT PROOF 1/2" CAP NUT FOR CENTER ROD.

STYLE 556
CAP FOR 2" OR 2 1/2" STD. PIPE
SPECIFY CENTER HOLE TAPPED OR UNTAPPED.

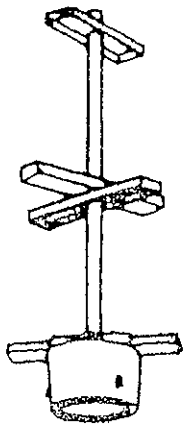

PROVED BY:
BRIAN J. FRAGIAO
DIRECTOR OF PUBLIC WORKS/TOWN ENGINEER
REVISED:

TOWN OF LOOMIS

STREET SIGN ASSEMBLY

DEPARTMENT OF PUBLIC WORKS

H-22

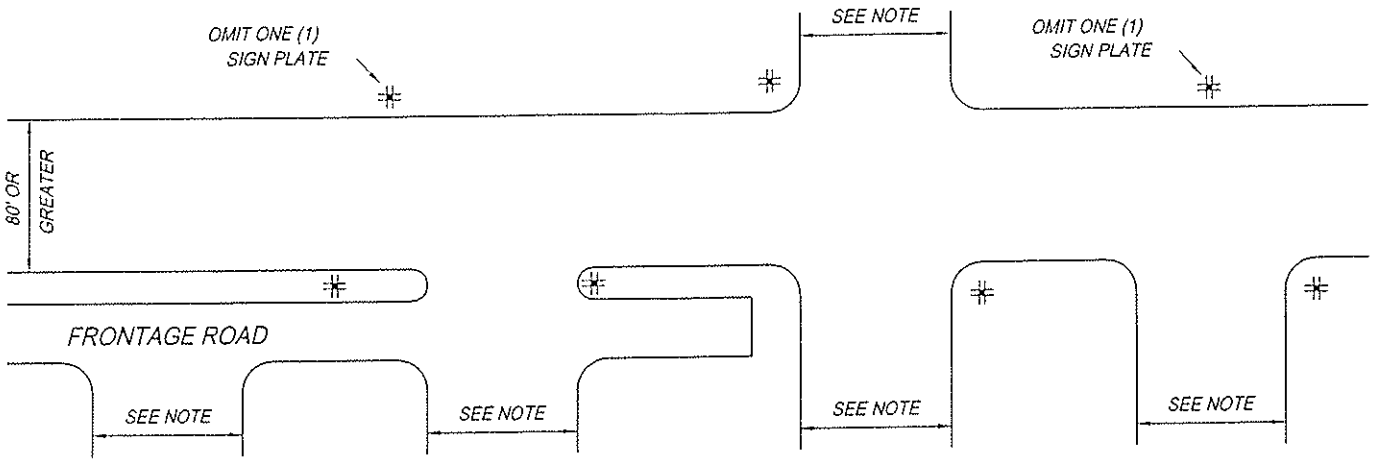

STREETS HAVING 80' OR GREATER R/W WIDTH

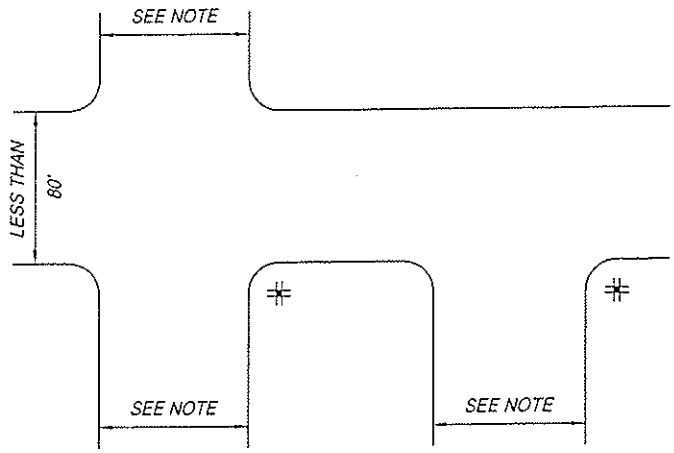

STREETS HAVING LESS THAN 80' R/W WIDTH

LEGEND:

STANDARD STREET NAME SIGN INSTALLATION. FOUR (4) SIGN PLATES ON 1-3/4" x 1-3/4" UNISTRUT POST, 4x4 POST OR ON STREET LIGHT POLE.

NOTE: INTERSECTING STREETS WITH EQUAL OR LESSER R/W WIDTH

APPROVED BY: BRIAN J. FRAGIAO DIRECTOR OF PUBLIC WORKS/TOWN ENGINEER REVISED:		TOWN OF LOOMIS **STREET NAME SIGN PLACEMENT DETAILS** DEPARTMENT OF PUBLIC WORKS	**H-23**

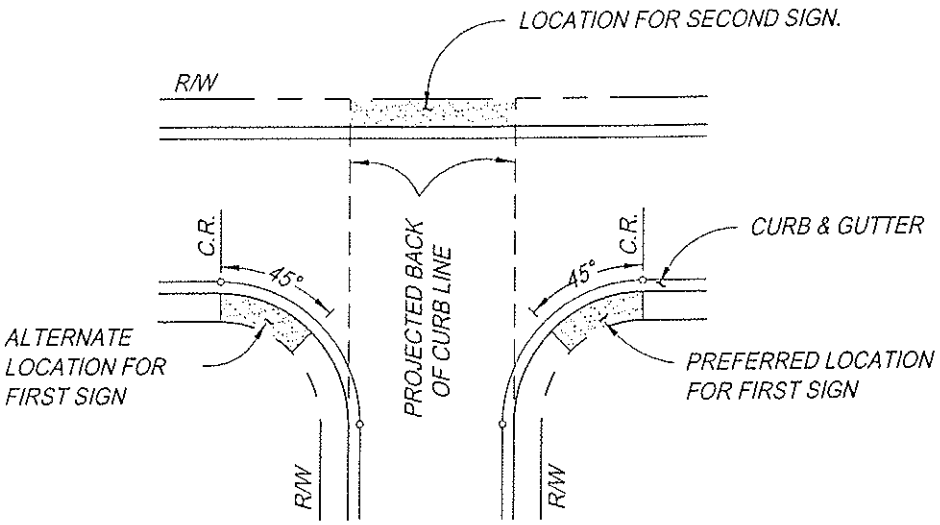

NOTE: STREET NAME SIGNS MAY BE INSTALLED ON STREET LIGHT POLES WHEN THEY ARE LOCATED WITHIN THE LIMITS DEFINED ON THIS DETAIL.

APPROVED BY: BRIAN J. FRAGIAO DIRECTOR OF PUBLIC WORKS/TOWN ENGINEER REVISED:		TOWN OF LOOMIS **STREET NAME SIGN PLACEMENT ON STREET LIGHT** DEPARTMENT OF PUBLIC WORKS	**H-24**

RADII REQUIREMENTS

STREET R/W WIDTH	(R)	(T)
50'	50'	50'
56'	50'	50'
62'	65'	65'
72'	75'	75'

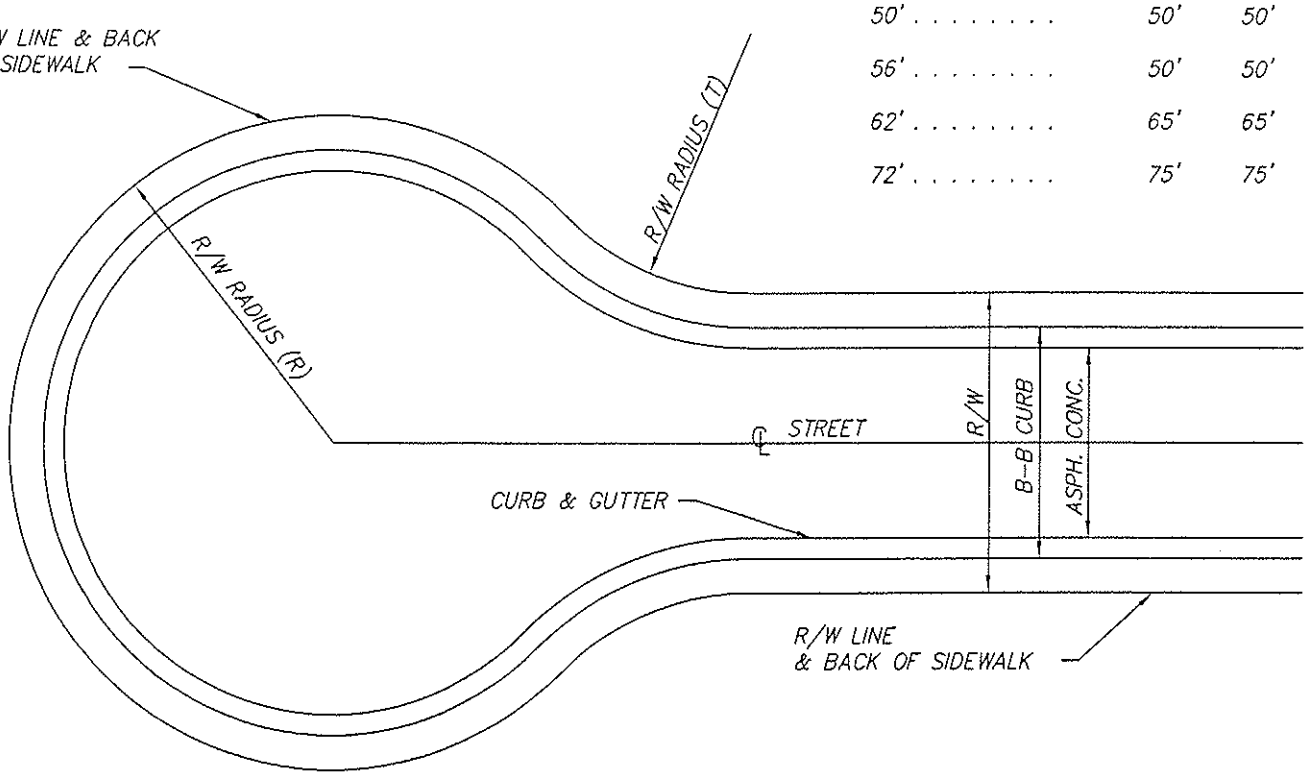

NOTE: A STANDARD CODE W53 (NOT A THROUGH STREET) SIGN IS TO BE POSTED AT THE ENTRANCE TO ALL CUL-DE-SACS GREATER THAN 500' IN LENGTH

APPROVED BY:

BRIAN J. FRAGIAO
DIRECTOR OF PUBLIC WORKS/TOWN ENGINEER

REVISED:

TOWN OF LOOMIS

CUL-DE-SAC DETAILS

DEPARTMENT OF PUBLIC WORKS

H-25

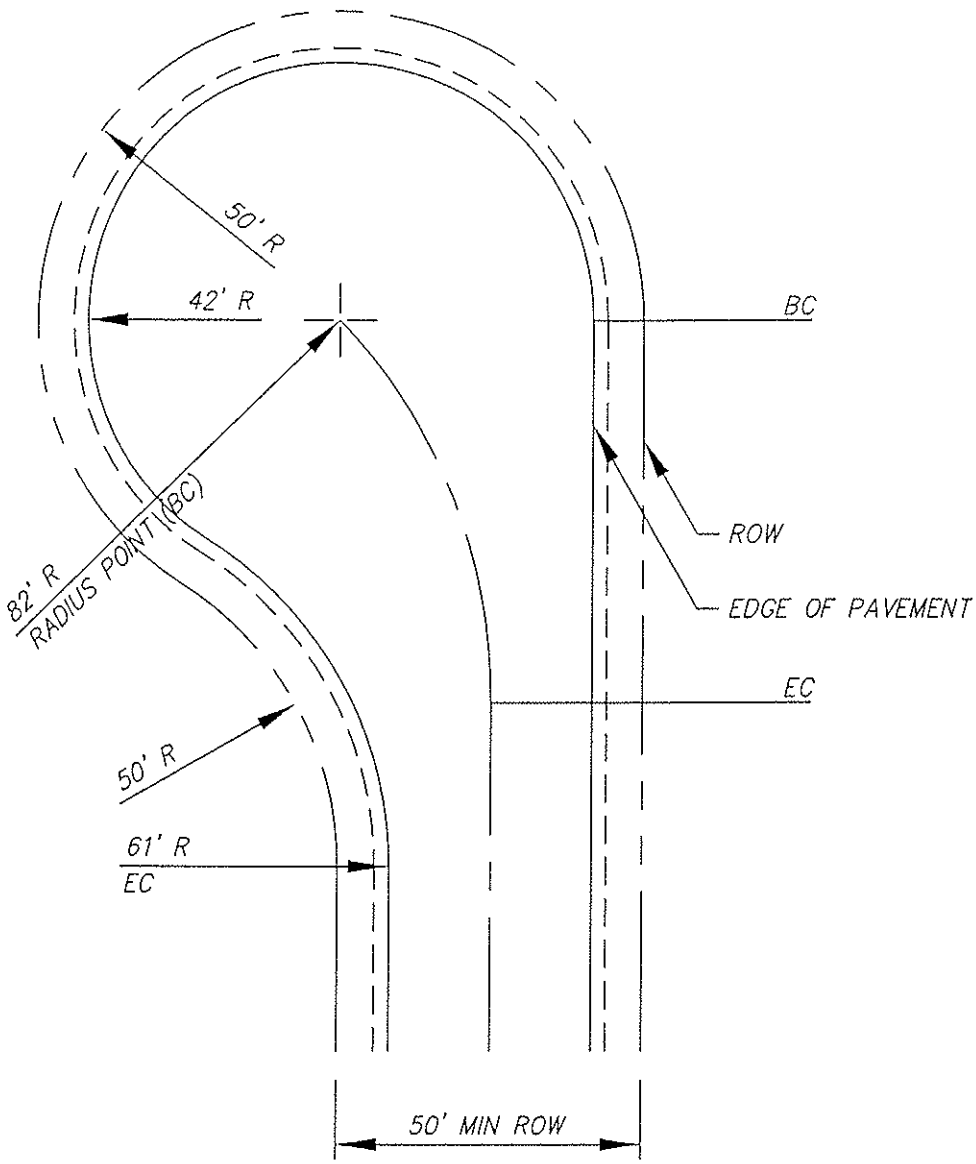

NOTE:

COMMERCIAL AND INDUSTRIAL APPLICATIONS WILL REQUIRE A SPECIAL DESIGN APPROVED BY THE ENGINEER.

PROVED BY: BRIAN J. FRAGIAO DIRECTOR OF PUBLIC WORKS/TOWN ENGINEER REVISED:		TOWN OF LOOMIS OFFSET CUL-DE-SAC BULB DEPARTMENT OF PUBLIC WORKS	H-26

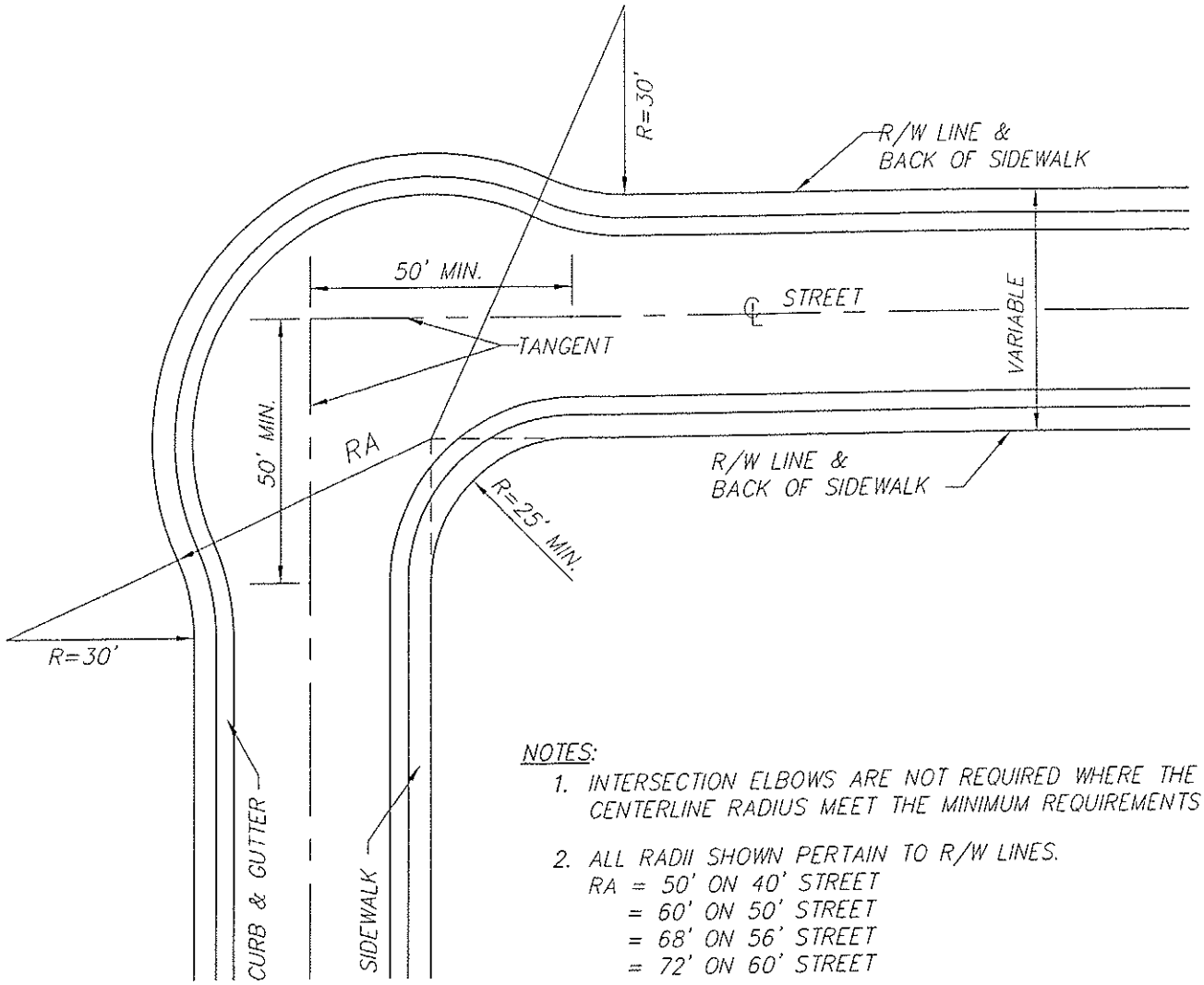

NOTES:

1. INTERSECTION ELBOWS ARE NOT REQUIRED WHERE THE CENTERLINE RADIUS MEET THE MINIMUM REQUIREMENTS
2. ALL RADII SHOWN PERTAIN TO R/W LINES.
   RA = 50' ON 40' STREET
   = 60' ON 50' STREET
   = 68' ON 56' STREET
   = 72' ON 60' STREET
3. A MINIMUM OF 50' OF TANGENT IS REQUIRED FROM THE POINT OF INTERSECTIONS OF THE CENTERLINES.
4. INTERSECTION ANGLE SHALL BE 90° ± 5° EXCEPT AS APPROVED BY TOWN ENGINEER.

APPROVED BY: BRIAN J. FRAGIAO DIRECTOR OF PUBLIC WORKS/TOWN ENGINEER REVISED:		TOWN OF LOOMIS 90° INTERSECTION ELBOW DEPARTMENT OF PUBLIC WORKS	H-27

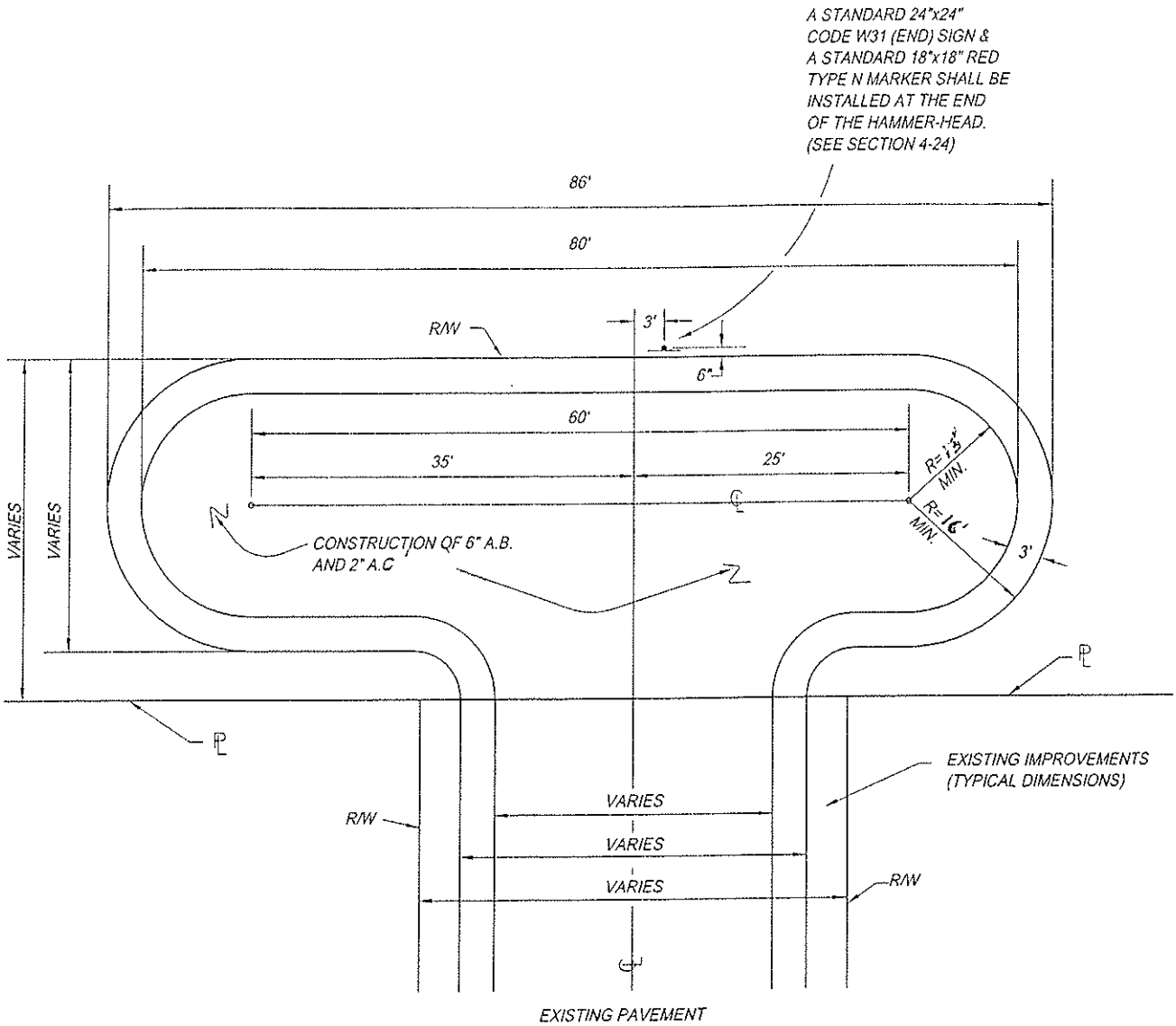

NOTES:

1. HAMMER-HEAD DESIGN USED WHERE TEMPORARY CUL-DE-SAC CAN NOT BE CONSTRUCTED.
2. OTHER HAMMER-HEAD DESIGN USED TO BE APPROVED BY TOWN ENGINEER.

APPROVED BY: BRIAN J. FRAGIAO DIRECTOR OF PUBLIC WORKS/TOWN ENGINEER REVISED:		TOWN OF LOOMIS HAMMER-HEAD DESIGN DEPARTMENT OF PUBLIC WORKS	H–28

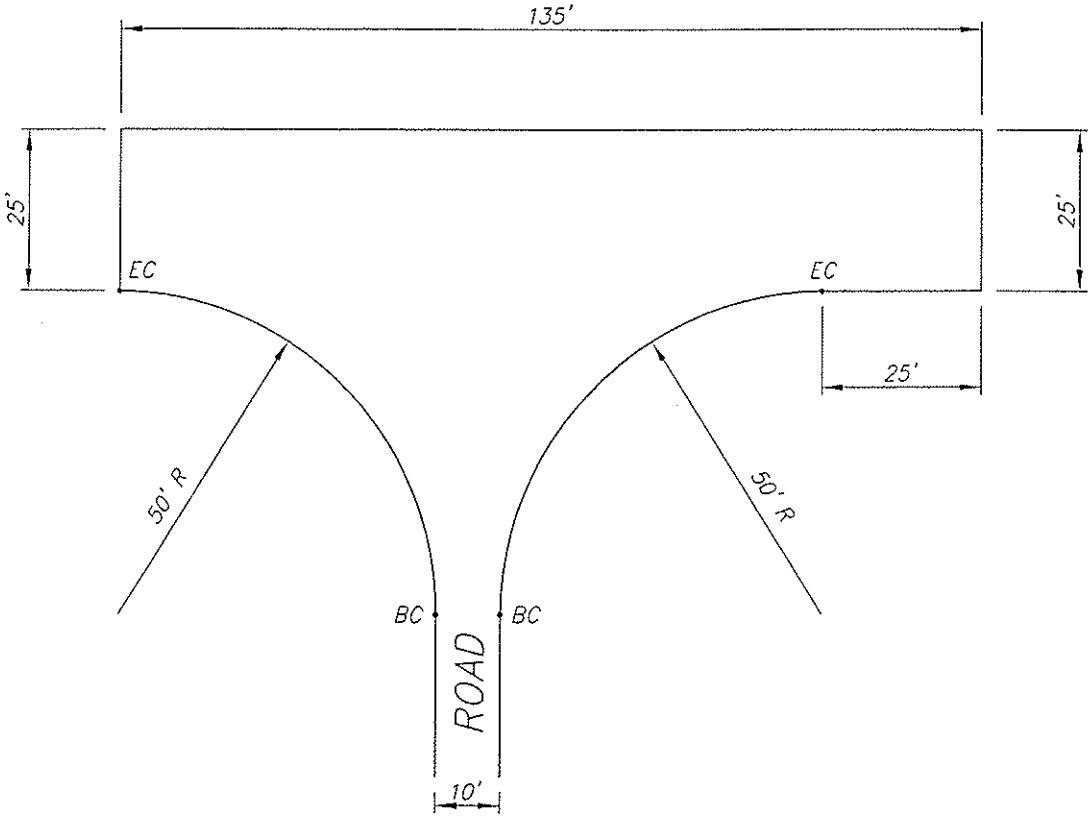

ORIENTATION 1

APPROVED BY:

BRIAN J. FRAGIAO
DIRECTOR OF PUBLIC WORKS/TOWN ENGINEER

REVISED:

TOWN OF LOOMIS

ACCESS ROAD HAMMERHEAD FOR UTILITY TRUCKS

DEPARTMENT OF PUBLIC WORKS

H-29

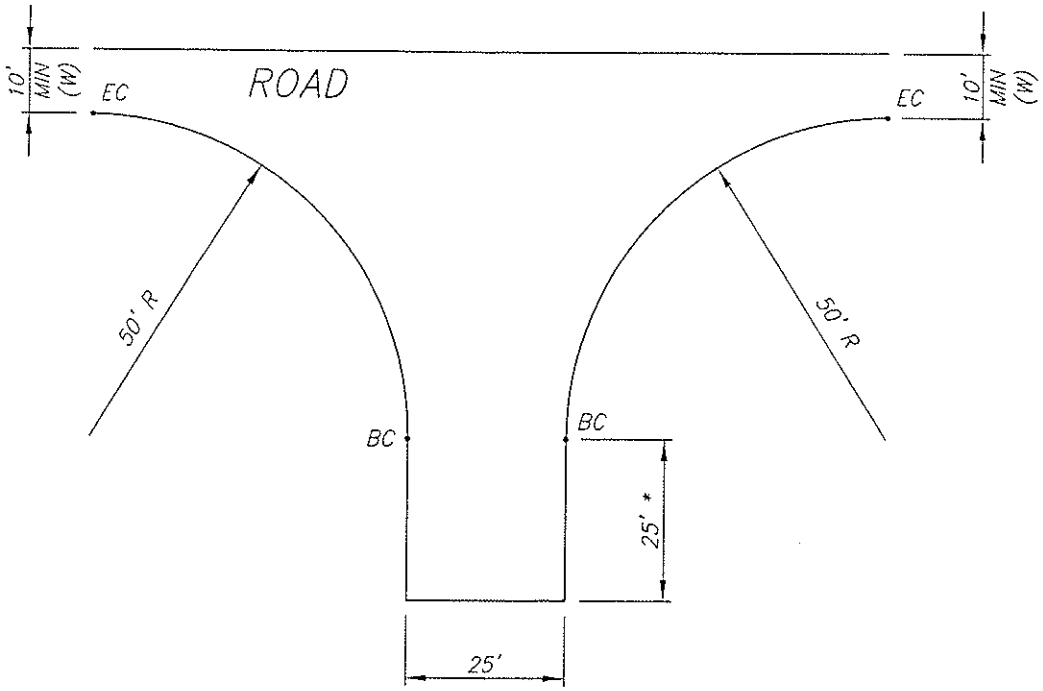

ORIENTATION 2

* FOR ROADS WHERE W > 10', THIS DIMENSION MAY BE REDUCED BY W–10' MAX REDUCTION IS 25'

APPROVED BY:

BRIAN J. FRAGIAO
DIRECTOR OF PUBLIC WORKS/TOWN ENGINEER

REVISED:

TOWN OF LOOMIS

ACCESS ROAD HAMMERHEAD FOR UTILITY TRUCKS

DEPARTMENT OF PUBLIC WORKS

H–30

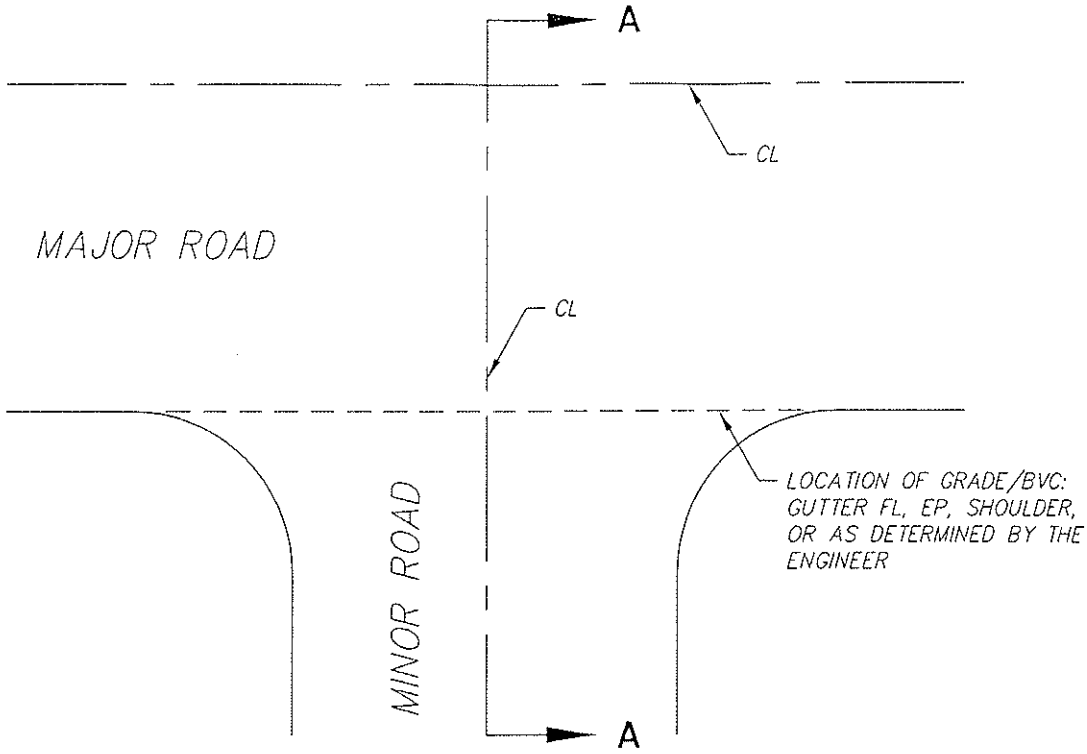

PLAN VIEW

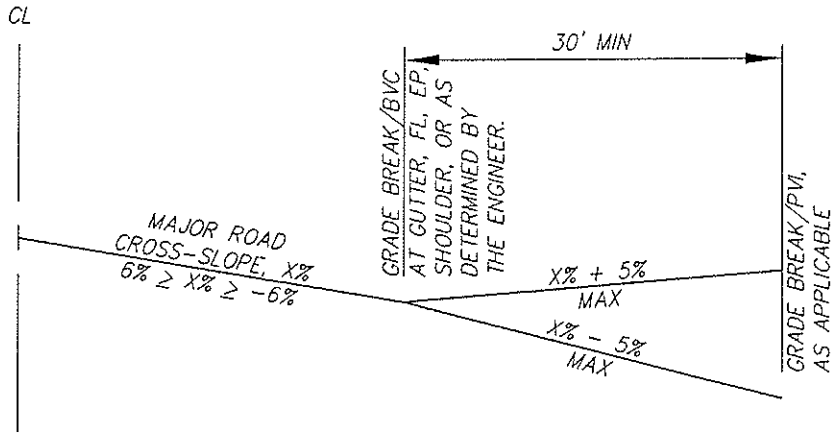

SECTION A-A

NOTE:

GRADE BREAK LOCATION SHALL BE OUTSIDE OF TRAVELED WAY OF MAJOR ROAD

APPROVED BY: BRIAN J. FRAGIAO DIRECTOR OF PUBLIC WORKS/TOWN ENGINEER REVISED:		TOWN OF LOOMIS **GEOMETRICS & PROFILES AT ROAD INTERSECTIONS** DEPARTMENT OF PUBLIC WORKS	**H-31**

FRONTAGE (EACH STREET)	MAXIMUM NUMBER OF DRIVEWAYS
45' TO 99'	ONE STD. DRIVEWAY
100' TO 400'	TWO STD. DRIVEWAYS
OVER 400'	TWO DRIVEWAYS OR MEET APPROVAL OF THE DIRECTOR

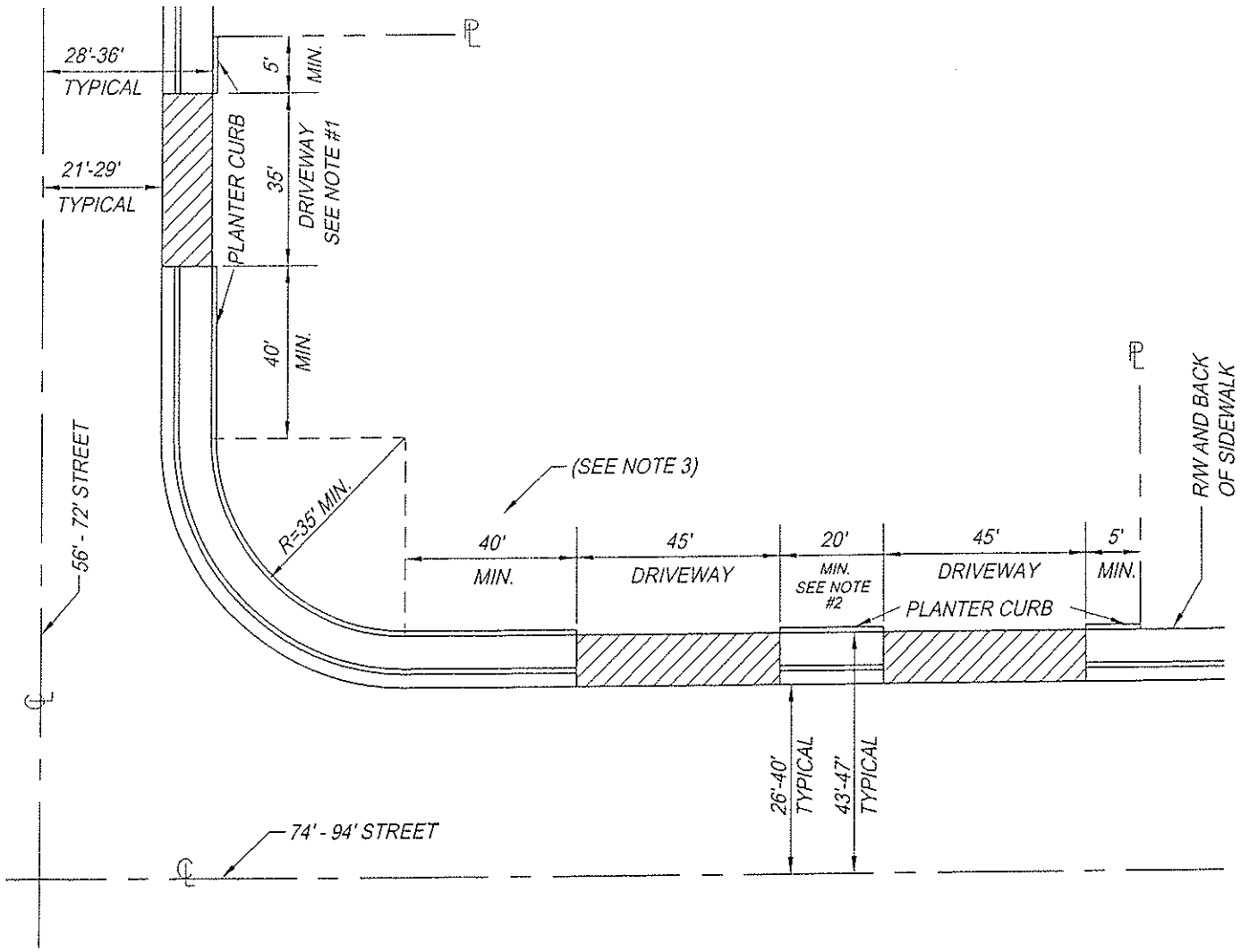

NOTES:

1. 25' TO 35' WIDTH DRIVEWAYS MAY BE APPROVED ON 56 TO 72 FOOT STREETS.
2. 20' MINIMUM ALLOWABLE DISTANCE BETWEEN DRIVEWAYS FOR LESS THAN 200' FRONTAGE AND 40' MINIMUM ALLOWABEL DISTANCE BETWEEN DRIVEWAYS FOR FRONTAGES OF 200' AND OVER.
3. ALL EXCEPTIONS TO THIS STANDARD MUST BE APPROVED BY THE TOWN ENGINEER.

APPROVED BY:

BRIAN J. FRAGIAO
DIRECTOR OF PUBLIC WORKS/TOWN ENGINEER

REVISED:

TOWN OF LOOMIS
COMMERCIAL FRONTAGE
AND
DRIVEWAY REGULATIONS
DEPARTMENT OF PUBLIC WORKS

H-32

BUS TURNOUT ON 94 THRU 130 FOOT STREETS

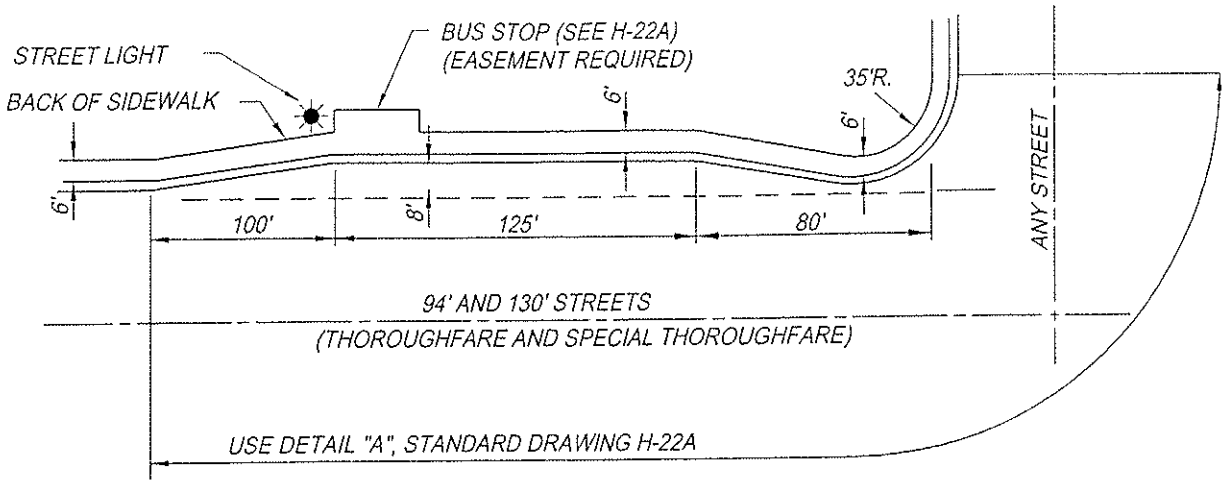

BUS TURNOUT ON 84 FOOT STREETS OR LESS

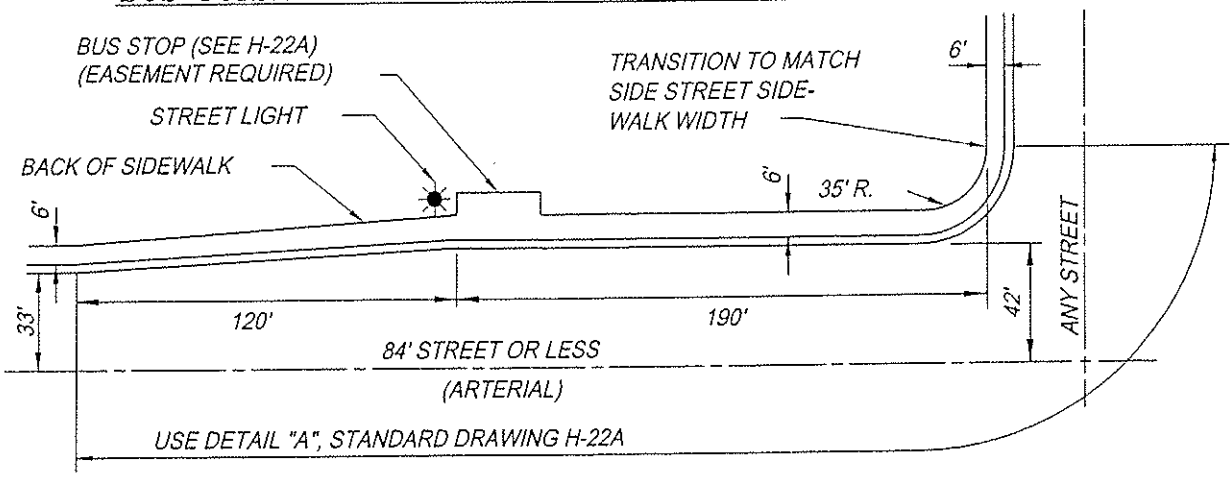

TYPICAL MID-BLOCK BUS TURNOUT

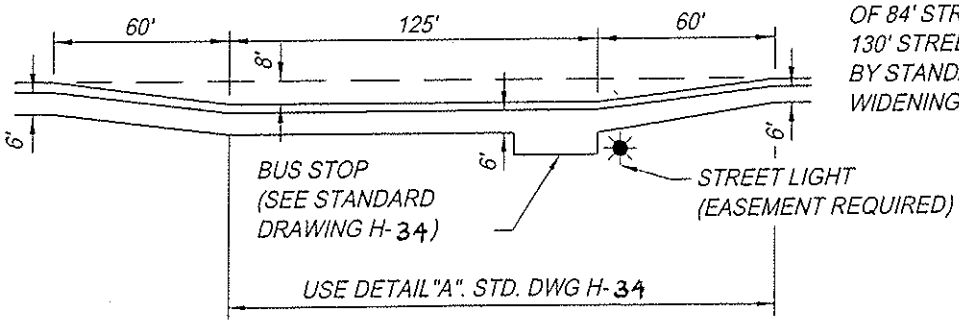

NOTES:

1. BUS STOPS AT INTERSECTIONS OF 84' STREETS, 110' STREETS & 130' STREETS ARE PROVIDED FOR BY STANDARD INTERSECTION WIDENING. SEE DWG H-23

NOTES (CONT.)

2. THE DIMENSIONS SHOWN ARE MINIMUM STANDARDS. THE DIRECTOR MAY DETERMINE LONGER WIDENING TO BE NECESSARY AT CERTAIN SPECIAL CASES OR IMPORTANT INTERSECTIONS WHERE DOCUMENTATION WAS MADE PRIOR TO SUBMITTAL OF PLANS.

APPROVED BY: BRIAN J. FRAGIAO DIRECTOR OF PUBLIC WORKS/TOWN ENGINEER REVISED:		TOWN OF LOOMIS BUS TURNOUT DETAILS DEPARTMENT OF PUBLIC WORKS	H-33

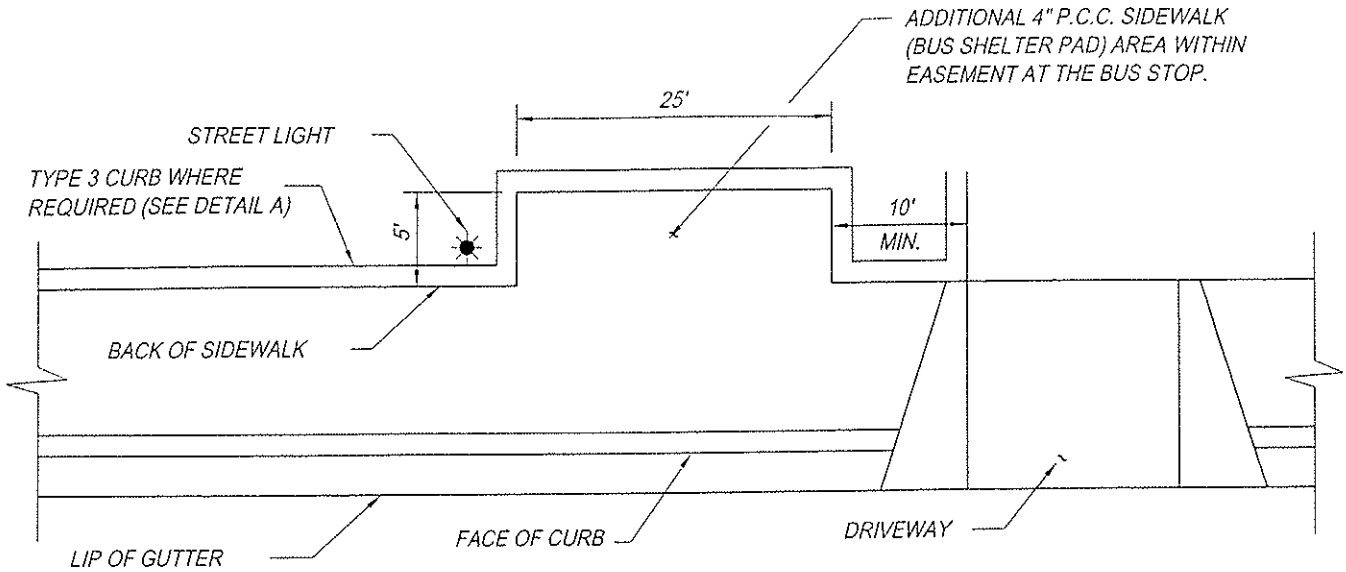

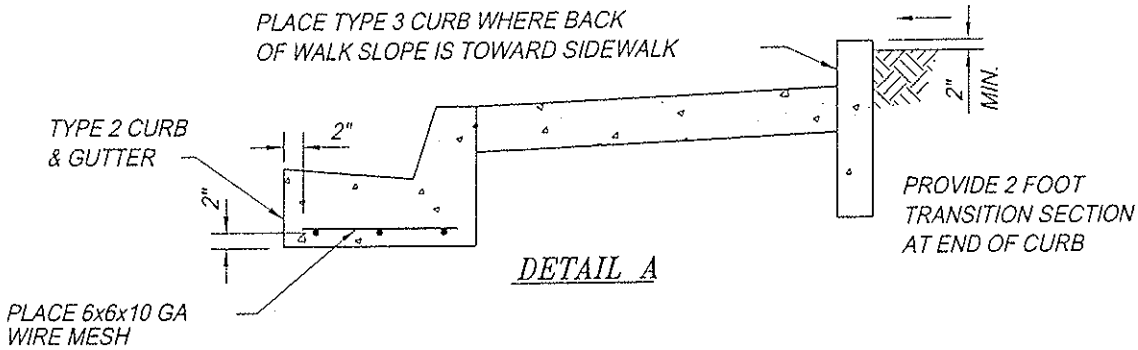

DETAIL A

NOTES:

1. DETAIL 'A' SECTION SHALL BE USED FOR 100 FEET EACH SIDE OF BUS STOPS WITHOUT TURNOUTS. THE WIRE MESH REINFORCING STEEL SHALL BE CONTINUED ACROSS ANY DRIVEWAYS WITHIN THE 100 FOOT DISTANCE FROM THE BUS STOP.
2. SEE STANDARD DRAWING H-22 FOR APPLICATIONS OF DETAIL 'A' AT BUS STOP TURNOUTS.
3. PLACE UNDER-SIDEWALK DRAINS (STD. DWGS H-) AT ALL BEHIND-SIDEWALK DRAINAGE CATCH POINTS.

APPROVED BY: BRIAN J. FRAGIAO DIRECTOR OF PUBLIC WORKS/TOWN ENGINEER REVISED:		TOWN OF LOOMIS BUS STOP DEPARTMENT OF PUBLIC WORKS	H-34

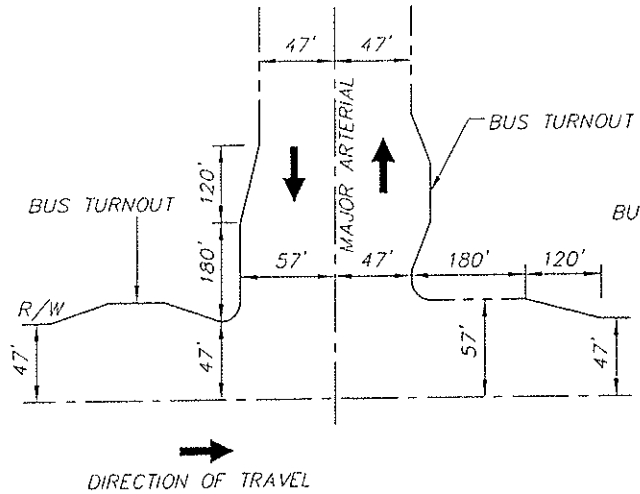

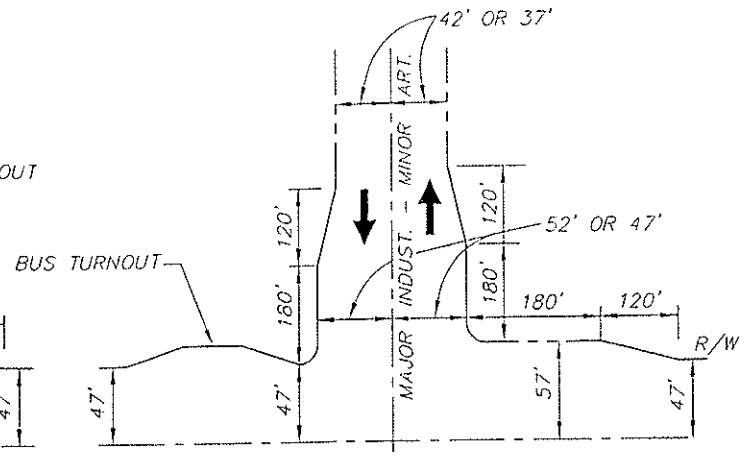

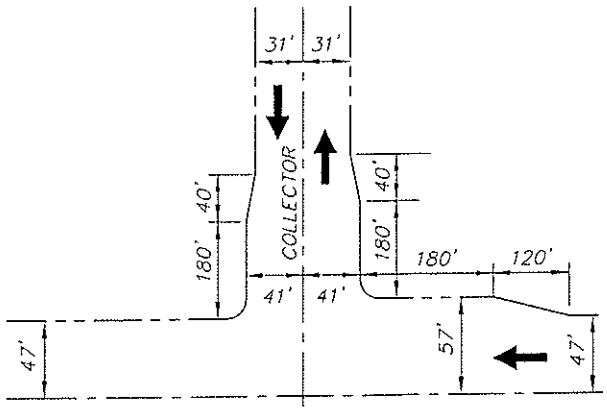

MAJOR ARTERIAL 94' (OR MORE) STREET

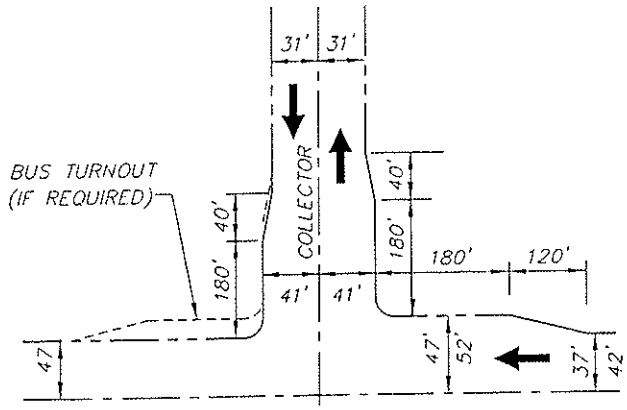

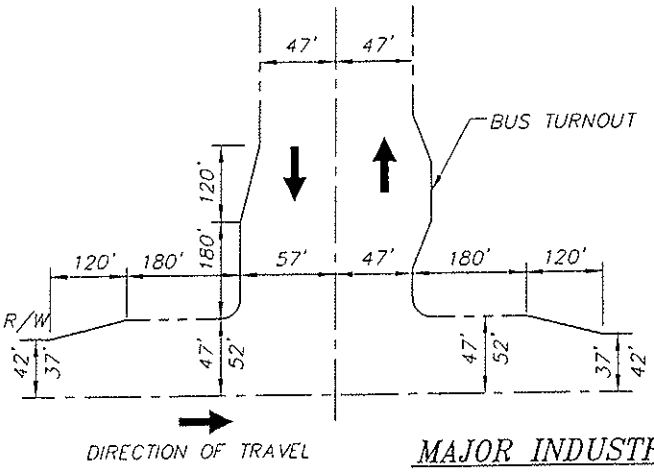

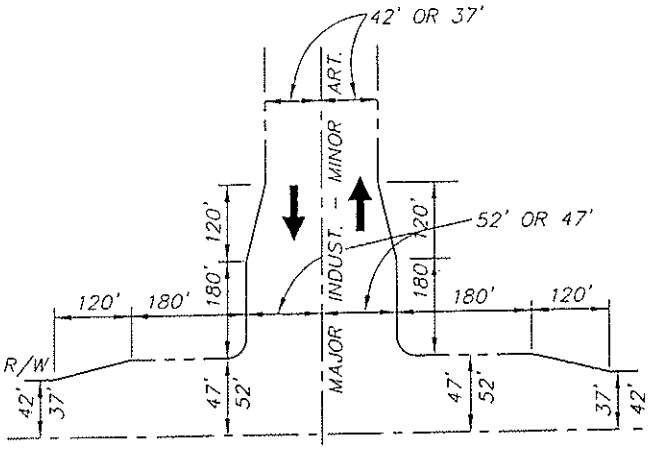

MAJOR INDUSTRIAL & MINOR ARTERIAL (84' OR LESS)

NOTES:

1. RADIUS AT CORNERS OF ALL INTERSECTIONS IS 35' MIN.
2. WIDENING NOT USUALLY REQUIRED AT COLLECTOR/ COLLECTOR AND SMALLER INTERSECTIONS.
3. SEE BUS TURNOUT STANDARD FOR DIMENSIONS.
4. INCLUDES 50' MINOR OR COLLECTOR STREET INTERSECTING ARTERIAL.
5. SEE DETAILS ON H-24 & H-25.
6. ANY MODIFICATIONS TO THESE STANDARDS MUST BE APPROVED BY THE TOWN ENGENEER.

APPROVED BY:

BRIAN J. FRAGIAO
DIRECTOR OF PUBLIC WORKS/TOWN ENGINEER

REVISED:

TOWN OF LOOMIS

WIDENING DETAILS AT MAJOR STREET INTERSECTIONS

DEPARTMENT OF PUBLIC WORKS

H-35

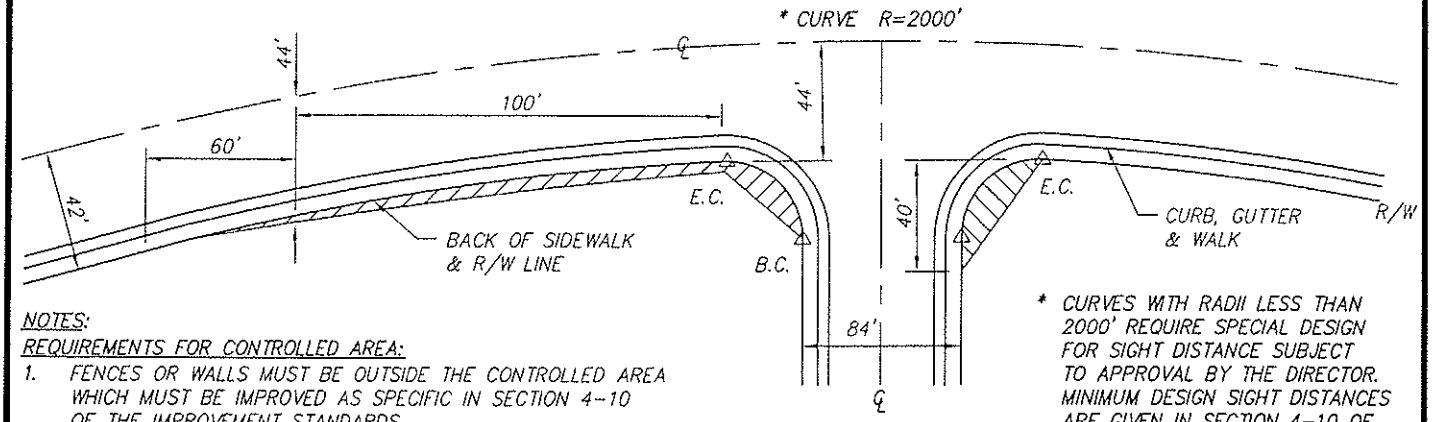

NOTES:

REQUIREMENTS FOR CONTROLLED AREA:

1. FENCES OR WALLS MUST BE OUTSIDE THE CONTROLLED AREA WHICH MUST BE IMPROVED AS SPECIFIC IN SECTION 4-10 OF THE IMPROVEMENT STANDARDS.
2. LAWN ONLY MAY BE PLANTED IN CONTROLLED AREA IF THERE IS NO FENCE OR WALL.
3. CONTROLLED AREA DIMENSIONS TO BE PER APPROVED OF TOWN ENGINEER

* CURVES WITH RADII LESS THAN 2000' REQUIRE SPECIAL DESIGN FOR SIGHT DISTANCE SUBJECT TO APPROVAL BY THE DIRECTOR. MINIMUM DESIGN SIGHT DISTANCES ARE GIVEN IN SECTION 4-10 OF THE IMPROVEMENT STANDARDS.

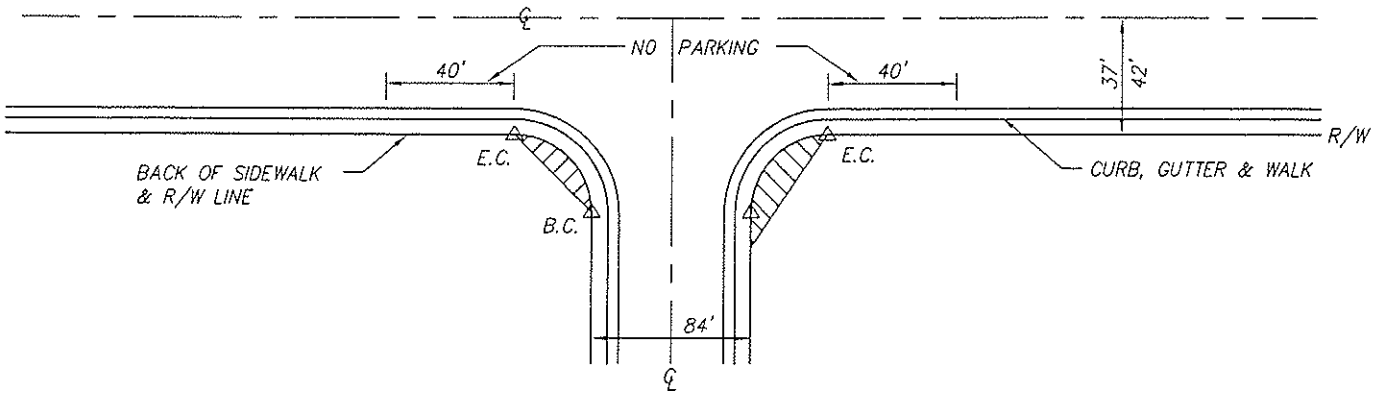

LEGEND:

CONTROLLED AREA

CURB RETURN △

APPROVED BY:

BRIAN J. FRAGIAO
DIRECTOR OF PUBLIC WORKS/TOWN ENGINEER

REVISED:

TOWN OF LOOMIS

SIGHT DISTANCE REQUIREMENTS FOR 84' STREETS

DEPARTMENT OF PUBLIC WORKS

H-36

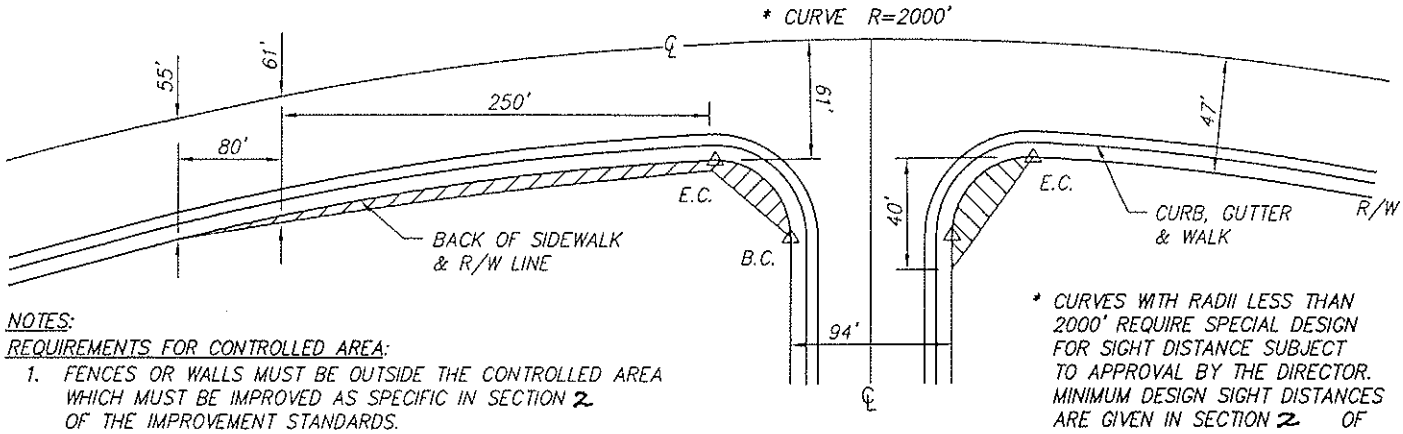

NOTES:

REQUIREMENTS FOR CONTROLLED AREA:

1. FENCES OR WALLS MUST BE OUTSIDE THE CONTROLLED AREA WHICH MUST BE IMPROVED AS SPECIFIC IN SECTION 2 OF THE IMPROVEMENT STANDARDS.
2. LAWN ONLY MAY BE PLANTED IN CONTROLLED AREA IF THERE IS NO FENCE OR WALL.
3. CONTROLLED AREA DIMENSIONS TO BE PER APPROVED OF TOWN ENGINEER

* CURVES WITH RADII LESS THAN 2000' REQUIRE SPECIAL DESIGN FOR SIGHT DISTANCE SUBJECT TO APPROVAL BY THE DIRECTOR. MINIMUM DESIGN SIGHT DISTANCES ARE GIVEN IN SECTION 2 OF THE IMPROVEMENT STANDARDS.

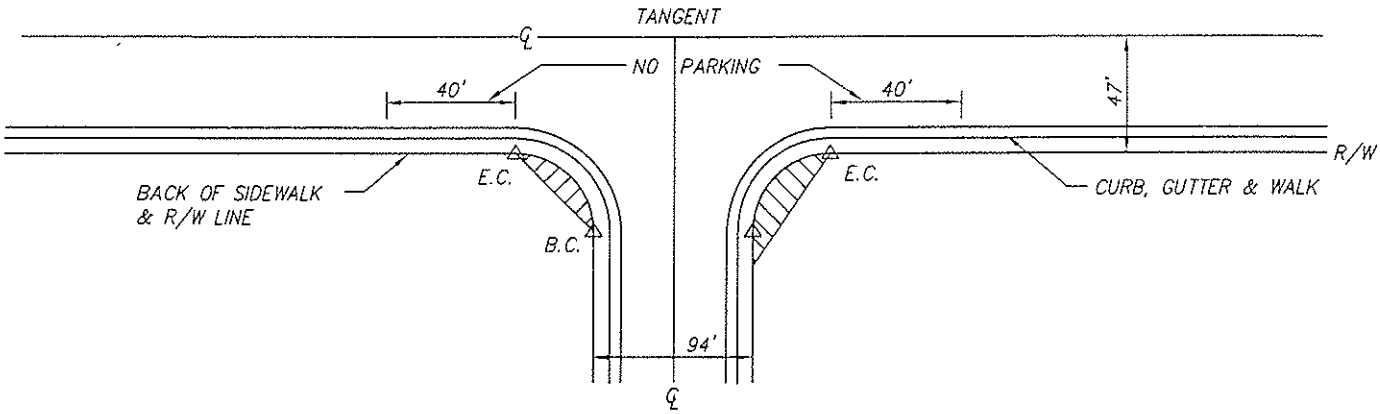

LEGEND:

CONTROLLED AREA

CURB RETURN △

APPROVED BY:

BRIAN J. FRAGIAO
DIRECTOR OF PUBLIC WORKS/TOWN ENGINEER

REVISED:

TOWN OF LOOMIS

SIGHT DISTANCE REQUIREMENTS FOR 94' STREETS

DEPARTMENT OF PUBLIC WORKS

H-37

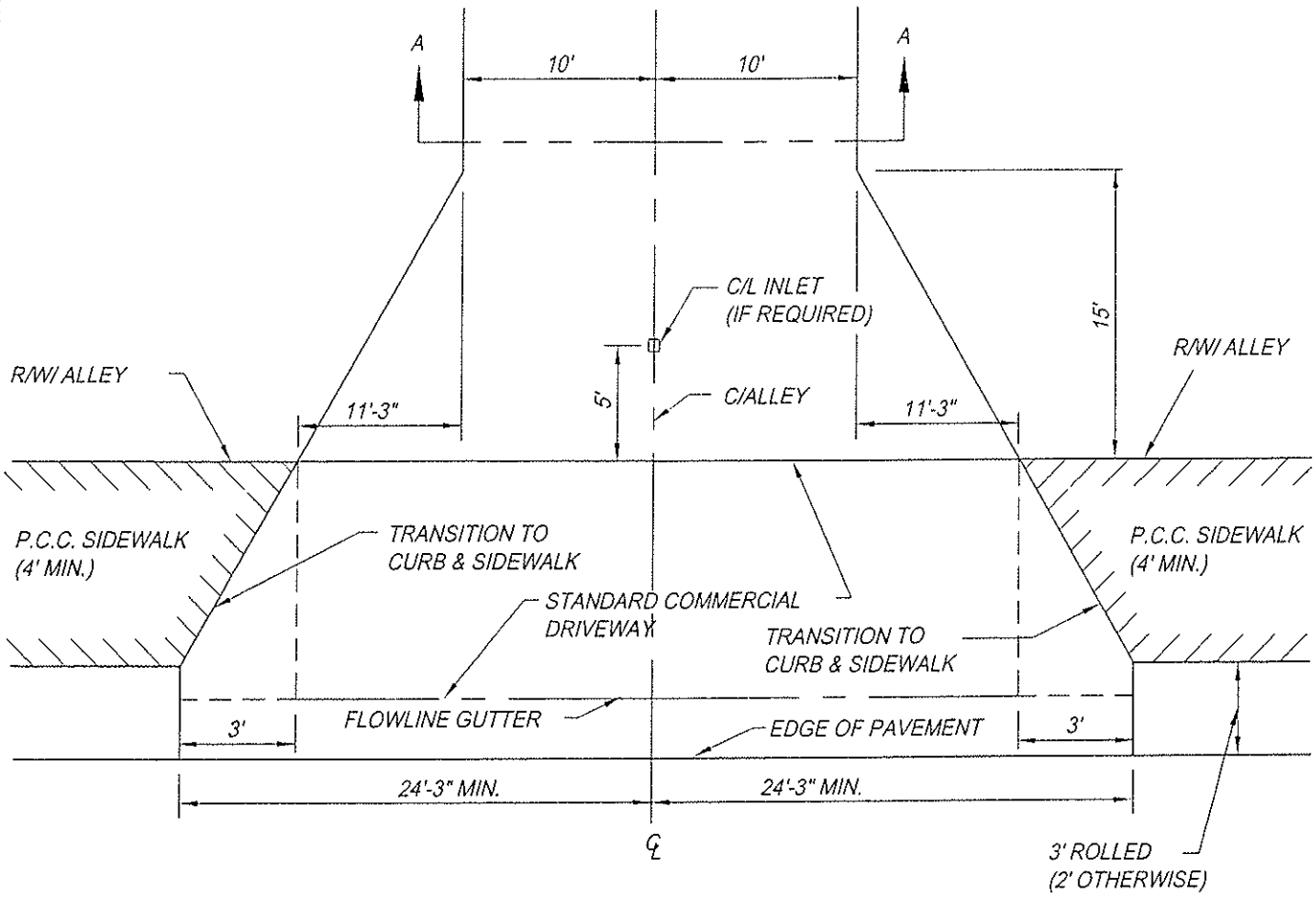

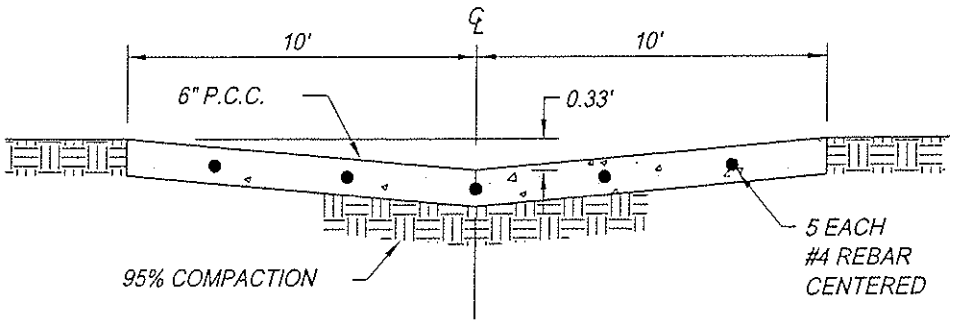

SECTION A–A

APPROVED BY: BRIAN J. FRAGIAO DIRECTOR OF PUBLIC WORKS/TOWN ENGINEER REVISED:		TOWN OF LOOMIS **ALLEY DETAILS AND DRIVEWAY TRANSITIONS** DEPARTMENT OF PUBLIC WORKS	**H–38**

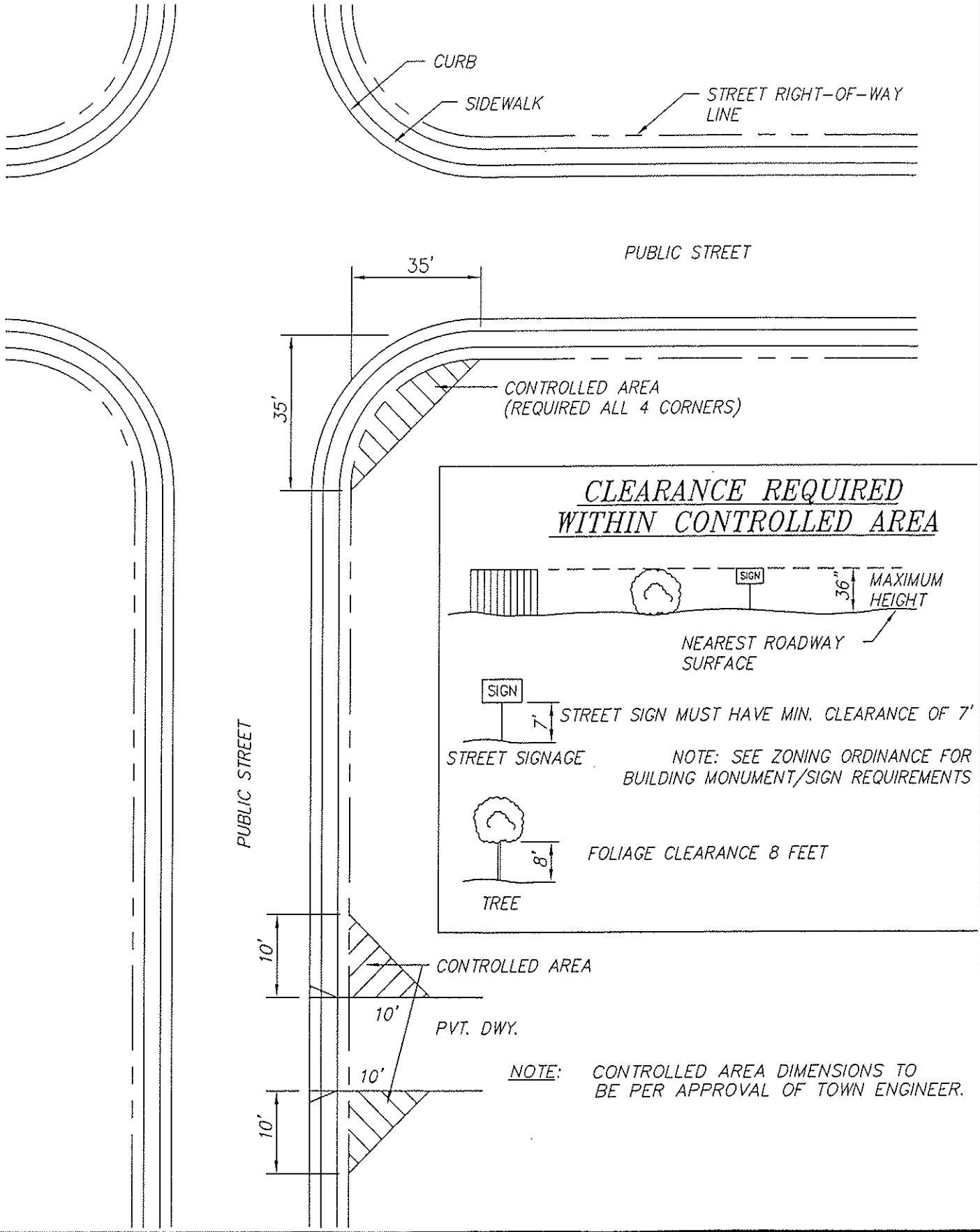

APPROVED BY:

BRIAN J. FRAGIAO
DIRECTOR OF PUBLIC WORKS/TOWN ENGINEER

REVISED:

TOWN OF LOOMIS

VISIBILITY REQUIREMENTS RESIDENTIAL STREETS

DEPARTMENT OF PUBLIC WORKS

H-39

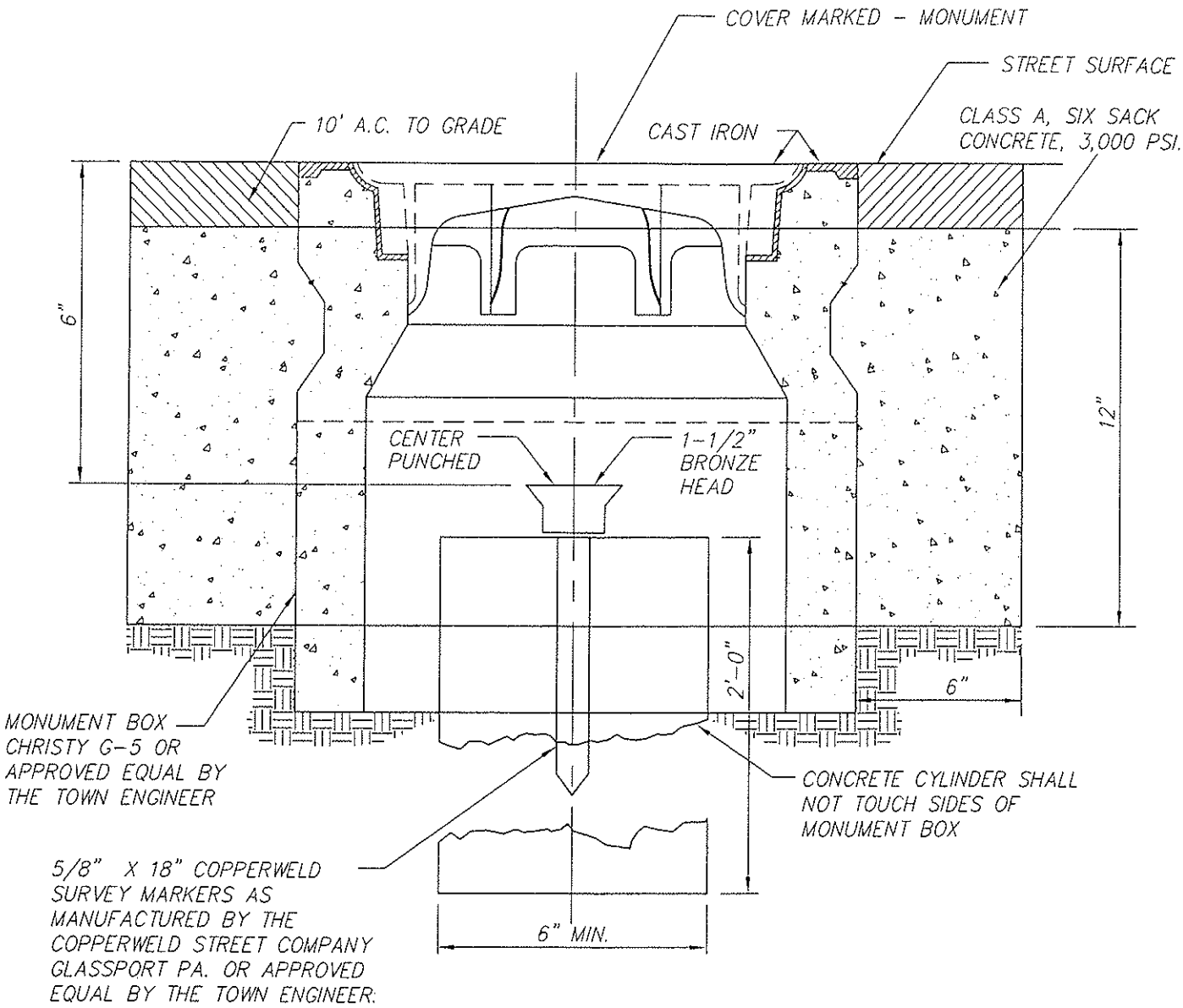

NOTE: 1. BOX SURVEY MONUMENT TO BE LOCATED AS PER DIRECTION OF TOWN ENGINEER.

2. NO FINAL ACCEPTANCE OF THE CONSTRUCTION SHALL BE ISSUED UNTIL THE SURVEY MONUMENTS ARE IN PLACE & THE CENTERLINE MONUMENT TIES ARE FURNISHED TO THE TOWN ENGINEER'S OFFICE.

APPROVED BY: BRIAN J. FRAGIAO DIRECTOR OF PUBLIC WORKS/TOWN ENGINEER REVISED:		TOWN OF LOOMIS **BOXED SURVEY MONUMENT** DEPARTMENT OF PUBLIC WORKS	**H-40**

TYPE (1) NEWLY PAVED SURFACES (LESS THAN 5 YEARS OLD)
MAJOR THOROUGHFARES

WITH HIGH QUALITY RIDING SURFACES
BORING OR JACKING ONLY
NO PAVEMENT CUTTING PERMITTED.

TYPE (2) ANY ROAD SURFACED WITH ASPHALT CONCRETE, CHIP SEAL, OR OTHER ASPHALTIC MATERIAL

STRUCTURAL SECTION:

(A) CHIP SEAL OR OTHER ASPHALTIC MATERIAL AS DIRECTED BY TOWN ENGINEER

(B) 3" AC MIN (2 LIFTS) OR MATCH EXISTING ROAD WHICHEVER IS GREATER

(C) 8" CLASS 2 AB MIN. OR MATCH EXISTING ROAD STRUCTURAL SECTION DEPTH, WHICHEVER IS GREATER 95% RELATIVE COMPACTION

(D) APPROVED COVER & BACKFILL

(E) MATCH EXISTING STRUCTURAL SECTION

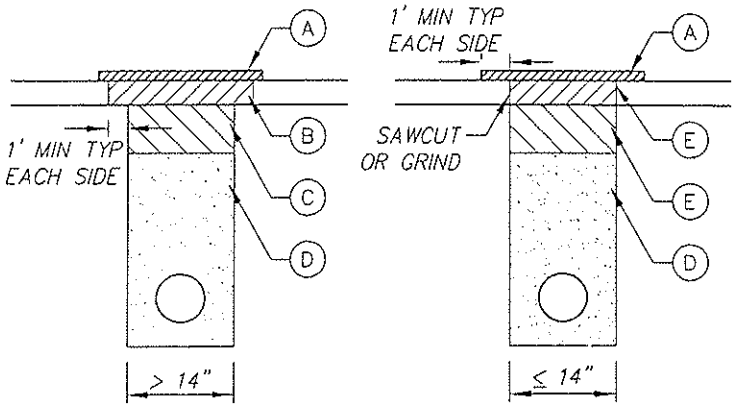

TYPE (3) UNSURFACED ROAD, SHOULDER, OR OTHER UNSURFACED AREAS SUBJECTO TO TRAFFIC LOADS

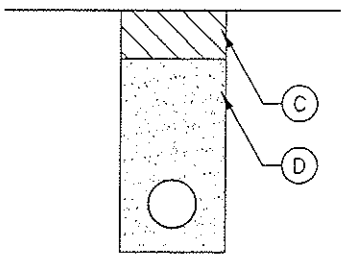

TYPE (4) OUTSIDE OF ROADWAY PRISM (NOT SUBJECT TO TRAFFIC)

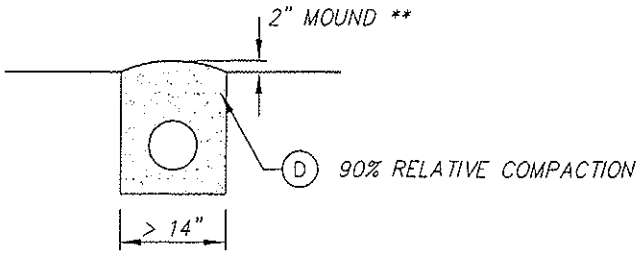

** – MOUND NOT REQUIRED FOR TRENCHES ≤ 14 INCHES WIDE

APPROVED BY: BRIAN J. FRAGIAO DIRECTOR OF PUBLIC WORKS/TOWN ENGINEER REVISED:		TOWN OF LOOMIS **TRANSVERSE TRENCH RESURFACING SECTIONS** DEPARTMENT OF PUBLIC WORKS	**H–41**

TYPE (1) NEWLY PAVED SURFACES AND MAJOR THOROUGHFARES WITH HIGH QUALITY RIDING SURFACES

1. BORING AND JACKING – NO PAVEMENT CUTTING.
2. ANY CUTTING MUST BE REQUESTED IN WRITING TO THE DIRECTOR OF PUBLIC WORKS AND APPROVED IN WRITING BY THE DIRECTOR. RESTORATION SHALL BE AS DIRECTED BY THE DIRECTOR AND MAY INCLUDE:
   A. COPLETE ROAD OVERLAY AFTER TRENCHING, 0.2 FT. MIN. THICKNESS OR AS SPECIFIED ON THE PERMIT.
   B. COMPLETE ROAD RECONSTRUCTION TO MATCH EXISTING.
3. ANY OTHER RESTORATION MUST BE REQUESTED IN WRITING TO THE DIRECTOR OF PUBLIC WORKS AND APPROVED IN WRITING BY THE DIRECTOR.

TYPE (2) ROADS SURFACED WITH ASPHALT CONCRETE OLDER THAN 5 YEARS OR SURFACE TREATMENT (CHIP SEAL OR OTHER MATERIAL), OLDER THAN 3 YEARS

STRUCTURAL SECTION:

(A) CHIP SEAL OR OTHER ASPHALTIC MATERIAL AS DIRECTED BY TOWN ENGINEER, MINIMUM OF 2 FT. EITHER SIDE OF TRENCH LIMITS. IF X>3 SEAL TO EOP

(B) 3" AC OR MATCH EXISTING WHICHEVER IS GREATER

(C) 8" CLASS 2 AB MIN. OR MATCH EXISTING ROAD STRUCTURAL SECTION DEPTH, WHICHEVER IS GREATER 95% RELATIVE COMPACTION

(D) APPROVED COVER & BACKFILL

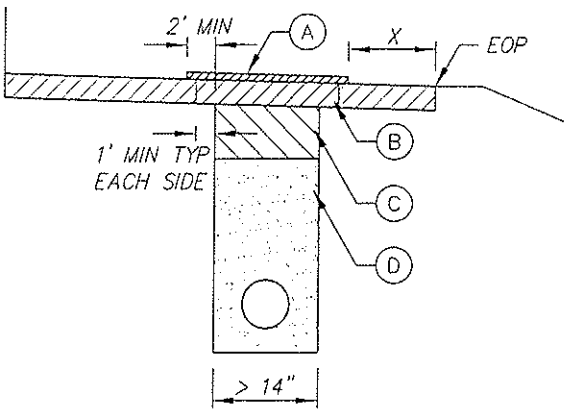

TYPE (3) UNSURFACED ROAD, SHOULDER OR OTHER AREAS SUBJECT TO TRAFF

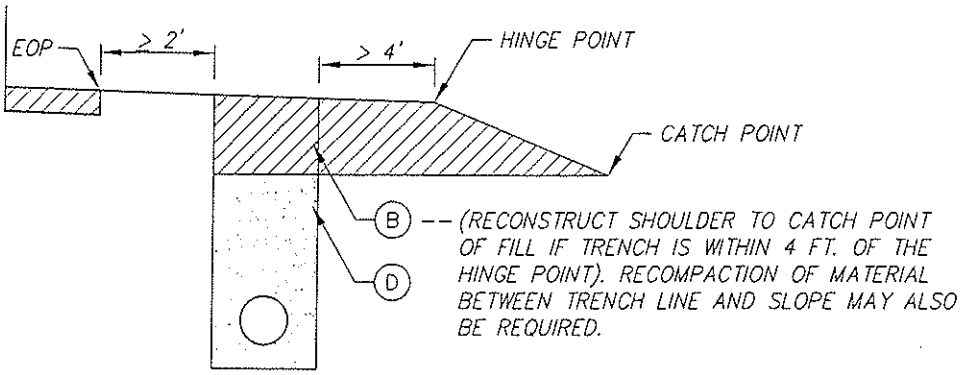

APPROVED BY: BRIAN J. FRAGIAO DIRECTOR OF PUBLIC WORKS/TOWN ENGINEER REVISED:		TOWN OF LOOMIS **LONGITUDINAL TRENCH RESURFACING SECTIONS SHEET 1** DEPARTMENT OF PUBLIC WORKS	**H–42**

TYPE (D) OUTSIDE ROADWAY PRISM NOT SUBJECT TO TRAFFIC

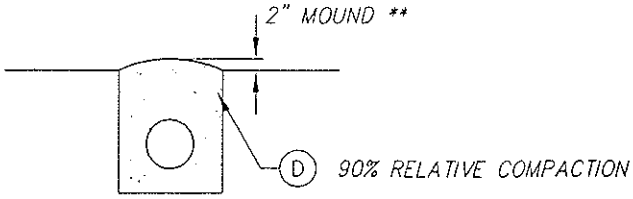

** – MOUND NOT REQUIRED FOR TRENCHES ≤ 14 INCHES WIDE

APPROVED BY:

BRIAN J. FRAGIAO
DIRECTOR OF PUBLIC WORKS/TOWN ENGINEER

REVISED:

TOWN OF LOOMIS

LONGITUDINAL TRENCH RESURFACING SECTIONS SHEET 2

DEPARTMENT OF PUBLIC WORKS

H–42A

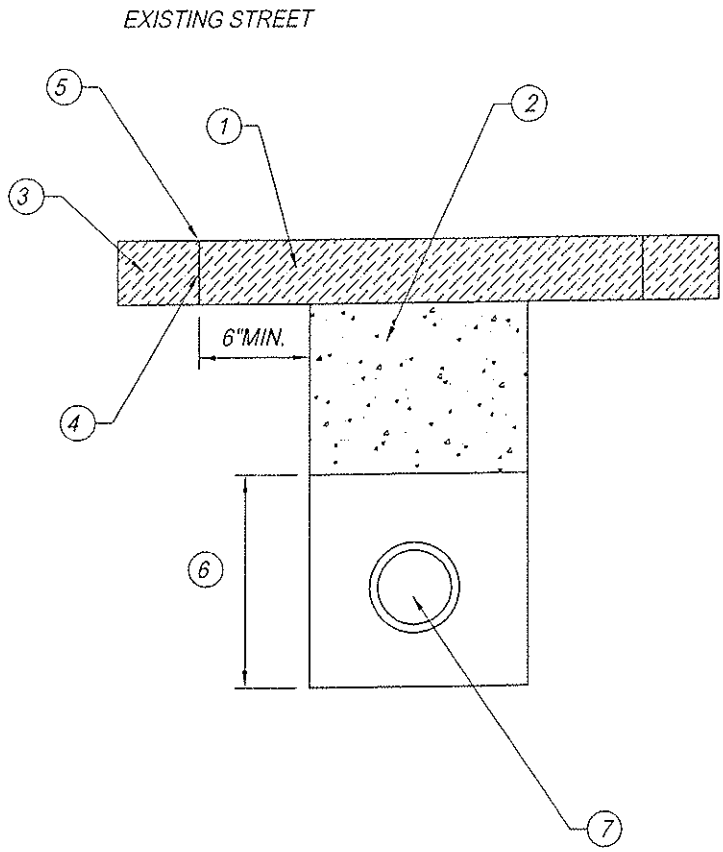

NOTES:

1. ASPHALT CONCRETE PATCH, SIX INCHES THICK OR THAT OF EXISTING, WHICHEVER IS MORE.
2. 24 INCHES OF TWO SACK CONCRETE SLURRY PER CALTRANS STANDARD SPEC. 19-3.062. OR APPROVED EQUAL.
3. EXISTING STREET PAVEMENT.
4. TACK COAT ON ALL VERTICAL PAVEMENT SAWCUTS.
5. SAWCUT TYPICAL EACH SIDE OF TRENCH IN EXISTING STREET.
6. PIPE EMBEDMENT. PER APPROVAL OF TOWN ENGENEER.
7. PIPE OR CONDUIT.

APPROVED BY: BRIAN J. FRAGIAO DIRECTOR OF PUBLIC WORKS/TOWN ENGINEER REVISED:		TOWN OF LOOMIS UTILITY TRENCH PAVING BACKFILL AND EMBEDMENT DEPARTMENT OF PUBLIC WORKS	H-43

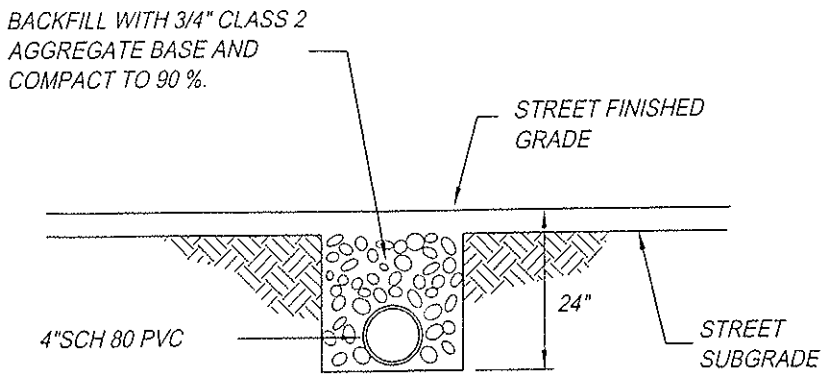

SECTION A-A:
NO SCALE

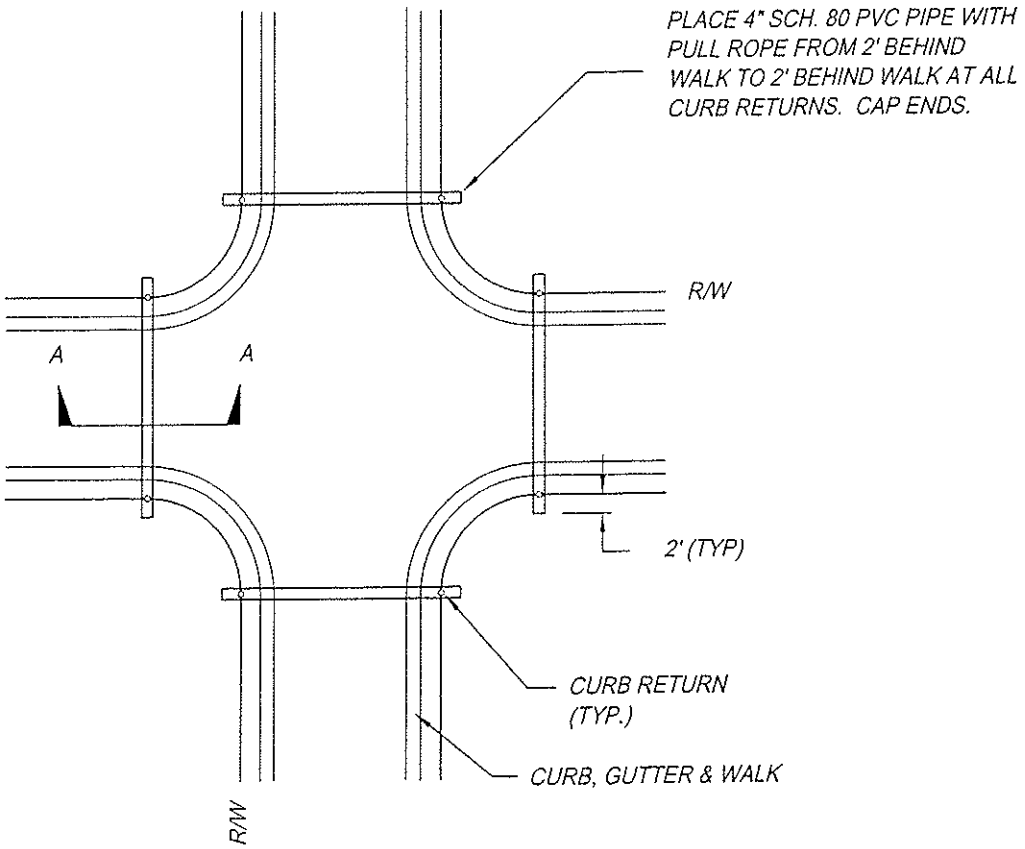

TYPICAL STREET INTERSECTION:
NO SCALE

APPROVED BY: BRIAN J. FRAGIAO DIRECTOR OF PUBLIC WORKS/TOWN ENGINEER REVISED:		TOWN OF LOOMIS CONDUIT FOR FUTURE TOWN USE DEPARTMENT OF PUBLIC WORKS	H-44

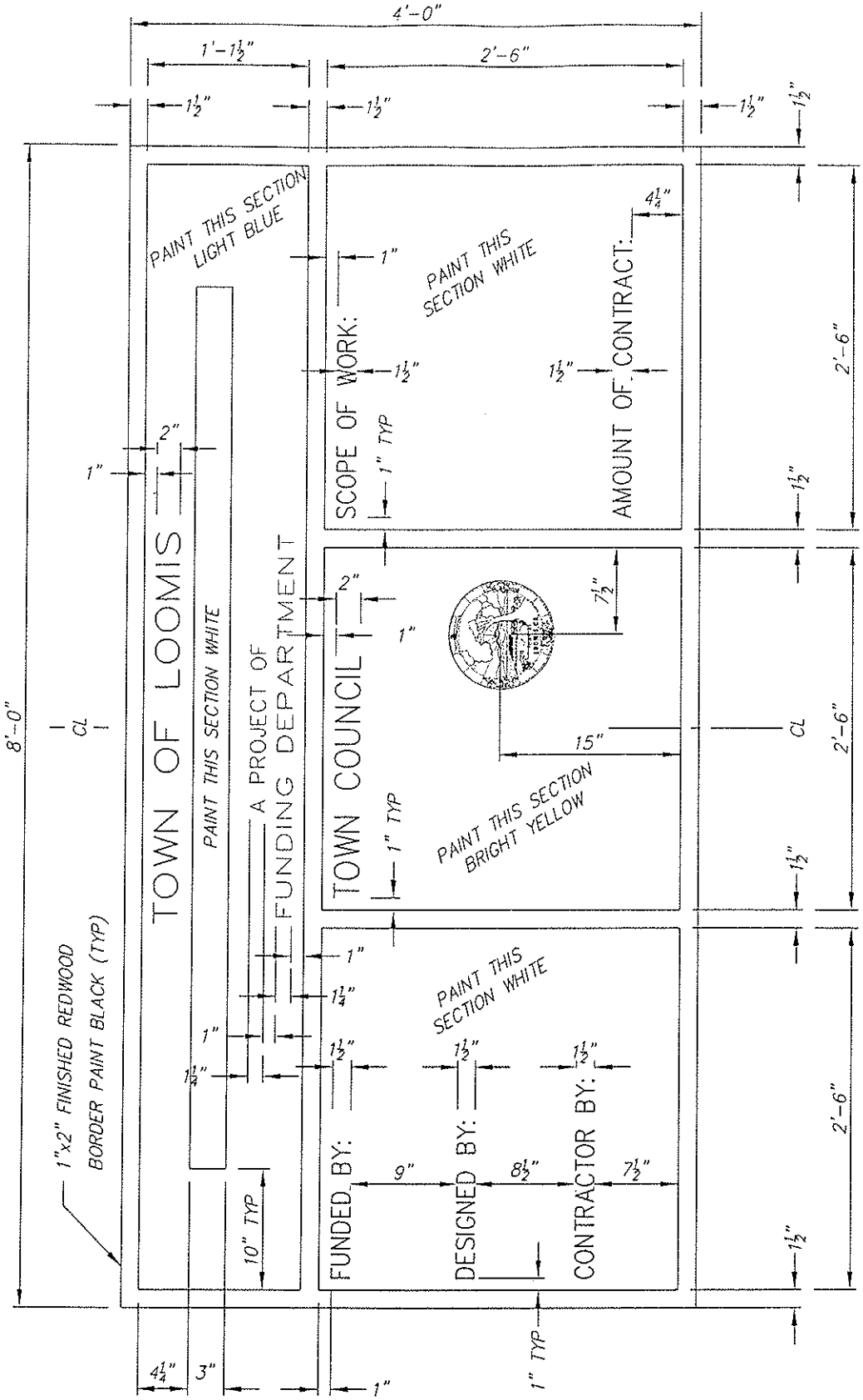

APPROVED BY:

BRIAN J. FRAGIAO
DIRECTOR OF PUBLIC WORKS/TOWN ENGINEER

REVISED:

TOWN OF LOOMIS

PROJECT SIGN
SHEET 1

DEPARTMENT OF PUBLIC WORKS

H-45

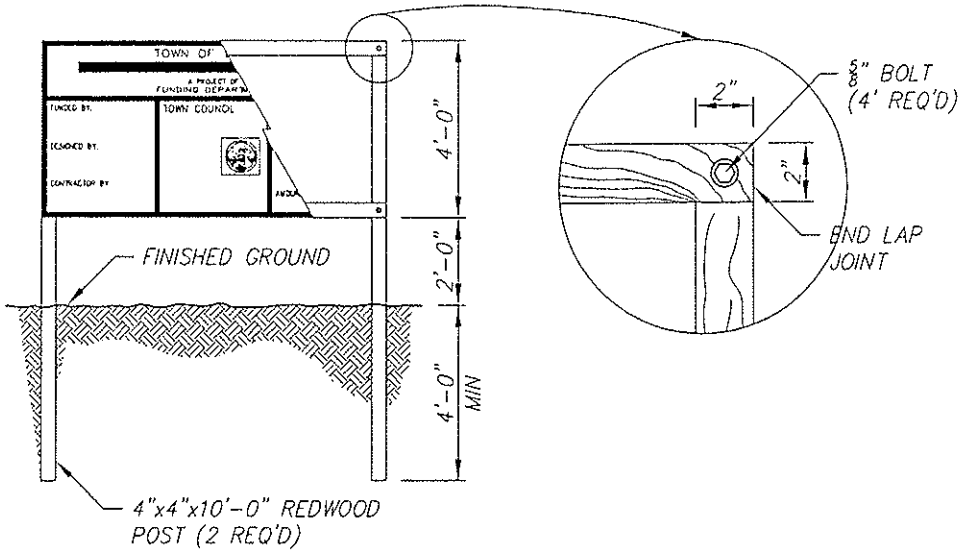

FRONT PROFILE

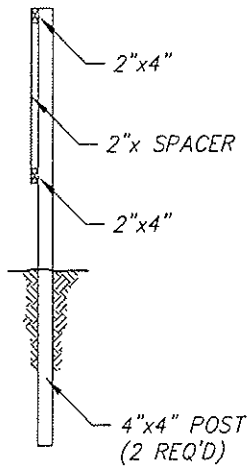

SIDE PROFILE

NOTES:

1. SEAL SHALL BE SUPPLIED BY THE CITY.
2. ALL LETTERS SHALL BE PAINTED BLACK AND 'FUTURA' STYLE.
3. SIGN SHALL BE BOLTED TO (2) 4"x4"x10'-0" LONG REDWOOD POSTS.
4. SIGN SHALL BE LOCATED IN THE FIELD BY THE TOWN INSPECTOR
5. CONTRACTOR SHALL REMOVE THE SIGN AS DIRECTED BY THE ENGINEER.
6. CONTRACTOR SHALL BE NOTIFIED AT THE PRE-CONSTRUCTION MEETING ON THE NECESSARY WORDING TO BE PAINTED ON THE PROJECT SIGN.

APPROVED BY: BRIAN J. FRAGIAO DIRECTOR OF PUBLIC WORKS/TOWN ENGINEER REVISED:		TOWN OF LOOMIS **PROJECT SIGN** **SHEET 2** DEPARTMENT OF PUBLIC WORKS	**H-45A**

SECTION 4

DOMESTRIC WATER SUPPLY SYSTEM (W)

CONSTRUCTION
IMPROVEMENT STANDARDS

SECTION 4

DOMESTIC WATER SUPPLY SYSTEM

4-1 INTRODUCTION

Design of water facilities shall conform to the requirements set forth in the PCWA Improvement Standards Technical Provisions and Standard Drawings, "Latest Edition" and the following provisions.

The applicant shall enter into all permits and/or agreements and pay any required fees in order to construct the water facilities.

4-2 WATER SUPPLY QUALITY

The quality of water shall conform to the Environmental Protection Agency Drinking Water Regulations.

4-3 REQUIRED FIRE FLOWS

Fire Flows shall be reviewed and approved by the Fire District.

4-4 TRENCH PAVING

Trench paving shall conform to Standard Drawing Details H-41 to H-44.

SECTION 5

SANITARY SEWER SYSTEM (SS)

CONSTRUCTION
IMPROVEMENT STANDARDS

SECTION 5

SANITARY SEWER SYSTEM

5-1 GENERAL – Design of sewer facilities shall conform to the requiremetns set forth in the South Placer Municipal Utiltiy District Standard Specifications and Improvement Standards "Latest Editorial".

The applicant shall enter into all permits and/or agreements and pay any required fees in order to construct the sewer facilities.

5-2 TRENCH PAVING - Trench paving shall conform to Standard Drawing Details H-41 to H-44.

SECTION 6

DRAINAGE (SD)

CONSTRUCTION
IMPROVEMENT STANDARDS

SECTION 6

DRAINAGE

6-1 GENERAL -- Drainage improvements are to include: culverts, drop inlets, lined channels, manholes, outlet structures and storm drain pipe. These improvements shall be installed in accordance with the approved improvement plans, these Improvement Standards and the latest edition of The State of California Department of Transportation Standard Specifications hereinafter referred to as the Caltrans Standard Specifications. The Town Inspector must be supplied with two (2) sets of cut sheets prior to construction, without exception.

6-2 CONSTRUCTION STAKING -- Construction staking shall be provided by the Developer for all drainage improvements. Such staking shall provide the station and offset, as well as the cut to the nearest hundredth of a foot, 0.01 foot. Stakes shall be provided at a minimum of every 50 feet in tangent sections and every 25 feet in curved sections. The Town Inspector shall be provided with two (2) sets of cut sheets prior to construction, without exception.

6-3 CHANNEL LINING INSTALLATIONS -- Channel lining installations shall conform to Standard Details SD-18 and 19 and to the following specifications:

A. **Surface Preparation** -- The surfaces of the areas to be lined shall be evenly graded to the lines and grade and sections as indicated on the approved plans. The surfaces shall be moistened thoroughly to prevent moisture from being drawn from the freshly placed lining. All surfaces on which lining is to be placed shall be free from water, mud and debris and shall be firm enough to prevent contamination of the fresh lining by earth or other foreign material. Prior to placing any lining, the contractor shall verify line and grade of the excavated channel.

B. **Reinforcement** -- Welded wire fabric shall be embedded in the concrete so that it will be a minimum of 1 inch clear from either face of the concrete, unless otherwise noted.

C. **Joints**

1. **Construction Joints** -- Shall be square and edged with a 1/4 inch radius edging tool. The edge shall be thoroughly wetted before the next section of lining is placed. Construction joints shall be constructed whenever the operation is halted for a period exceeding 30 minutes. Welded wire fabric reinforcing shall extend through the construction joint.

2. **Expansion Joints** -- Transverse expansion joints shall be edged with a 1/4 inch radius edging tool and shall be constructed at intervals of not more than 50 feet. All expansion joints shall be filled with premolded expansion joint filler material.

3. **Contraction Joints** -- Transverse contraction joints shall be constructed as intervals of 10 feet and shall be scored by troweling a groove 5/8 inch in depth and 1/4 inch in width. All joints shall be true to a uniform line and neat appearance.

D. Weep Holes -- On channels with side lining extending more than 18 inches vertically above the channel toe, weep holes shall be constructed at intervals of 10 feet, midway between contraction joints on each side of the channel. The weep hole elevation shall be 12 inches above the adjacent toe of slope.

The holes shall be backed by a minimum of 1 cubic foot of aggregate material tied in a burlap bag. The aggregate shall extend at least 6 inches above and below and to each side of the weep hole, and at least 10 inches into the side slope. The side and back of the burlap sack shall be protected from being coated by mortar or concrete during the lining placing operation.

On the day following the lining placement, each weep hole shall be rodded to assure it has not been blocked. The weep hole shall then be cut to fit the channel slope.

E. Cutoff Walls -- Cutoff walls shall be constructed around the perimeter at each end of the channel lining and at all locations where the new lining meets structures or existing lining, and at all other locations shown on the approved plans. The cutoff walls shall be a minimum of 6 inches thick and 18 inches in depth, as measured from the surface of the lining. The welded wire fabric shall be bent down into the cutoff walls. Cutoff walls, locations, and details require a design submitted to be approved by the Town Engineer prior to construction.

F. Finishing -- Poured in place concrete lining shall be spread and tamped until it is thoroughly compacted and mortar flushes to the surface. After striking off to grade, the concrete shall be hand floated with wooden floats not less than 4 inches in width and 30 inches in length. The entire surface shall then be broomed with a fine texture hair push-broom to produce a uniform surface. Brooming shall be done when the surface is sufficiently set to prevent deep scarring and shall be accomplished by drawing the broom parallel to the expansion and contraction joints.

All mortar blown channel lining shall be placed as early as practicable to the required depth. The surface shall then be checked with a straight-edge, and any low spots or depressions shall be brought up to the proper grade by placing additional mortar in such a manner that the finished surface will be reasonably smooth and uniform. Any base material shall then be struck off with a finishing tool to provide a finished equivalent to a broomed concrete surface.

G. Curing -- Channel lining shall be sprayed uniformly with a white pigmented or clear curing compound. The method and rate of application shall conform to Section 90-7.01B of the Caltrans Standard Specifications.

6-4 DROP INLET INSTALLATION -- Drop inlet installations shall conform to Standard Details SD-3 to SD-10 and to provisions in Sections 51 and 52 of the Caltrans Standard Specifications. The interior of the drop inlet shall have an Ordinary Surface Finish; rock pockets shall be grouted and brushed; exposed top surfaces shall have a Class I Surface Finish.

6-5 MANHOLE INSTALLATION

A. Bases

1. **Precast** -- Precast bases shall be placed on a foundation of 1/2 inch minus crushed rock, a minimum of 4 inches thick, compacted to 90 percent relative compaction.. Elevation differentials of inlets and outlets shall conform to the approved improvement plans. Openings in the base shall align true with all inlet and outlet pipes. Stubs or couplings provided in precast bases shall be of the same material as the pipe to which they connect, unless otherwise approved by the PWD Inspector.

2. **Cast-in-Place** -- The cast-in-place base portion shall not be placed higher than 6 inches above the outside tops of the main incoming and outgoing pipes. Minimum and maximum wall thicknesses for the cast-in-place sections shall conform to the following table:

Manhole Diameter	Minimum Wall Thickness	Maximum Wall Thickness
48"	5"	7"
60"	6"	8"
72"	7"	9"

Inside diameters of cast-in-place base portions shall equal the diameter of the manhole specified. Standard precast manhole riser sections and/or cones shall be placed above the cast-in-place section to bring the manhole rim to finish grade.

Concrete in the cast-in-place portion shall be placed neat against undisturbed earth.

B. **Cones** -- Cone tops shall be placed within 6 to 18 inches of final street grade. Where depth is insufficient for cones, flat slab tops shall be used. Lifting rings in precast cones shall be plugged with dry packed mortar.

C. **Joints** -- Joints in precast manhole sections shall be made with either mortar or plastic sealing compound.

1. **Mortar Application** -- All joint surfaces and the face of the manhole base shall be thoroughly cleaned and wetted before applying mortar. Both the inside and outside of mortared joints shall be plastered with mortar and the inside brushed to a smooth finish with a wet brush. Special precautions shall be taken to ensure that the entire joint space is filled with mortar and is watertight.

2. **Plastic Sealing Compound Application** -- All joint surfaces and the face of the manhole base shall be thoroughly cleaned before applying plastic sealing compound. The sealing compound shall be protected from dirt during application. Ends of the compound shall be joined end-to-end and not joined by overlapping. Sufficient compound shall be used to cause a visual "squeeze-out" of the compound material when adjacent sections are seated. Squeeze-out material on the inside of the manhole shall be neatly trimmed flush with the inside surface.

D. **Connections** -- Pipe connections to drainage manholes shall be made so that the pipe is flush with the inside face of the manhole. These connections shall be finished so that entrances are smooth. Unless the manhole is cast around the pipe, connections shall be made with dry packed cement mortar. Pipe connections shall not be made into the cone section of the manhole unless shown on the approved plans.

E. **Grade Rings** -- Grade adjustments shall be made using precast grade rings. Precast rings shall be a minimum of 2 inches in height and a maximum of 12 inches in height.

F. **Frames and Covers** -- The tops of frames and covers shall be set 1/8 inch below finish grade pavement in the street and two inches above finish grade in an unimproved area. Per the Standard Details, a 12 inch deep by 12 inch wide concrete collar shall be placed around the casting, covered by 0.10 foot of asphalt concrete paving in a street area. The concrete collar shall be class A, six sack, 3,000 psi. All joints between the frame, grade rings, dome, barrels and base shall be sealed with non-shrink mortar, or an approved plastic sealing material. Inside the manhole, all joints where the sealing material is not flush with the inside wall shall be grouted with non-shrink mortar and finished/wet-brushed.

G. **Adjusting Existing Manhole Frames** -- The frame shall be supported above the grade ring or dome by spacers, or by suspending with timber and wires. After the concrete collar is poured, any space between the frame and grade ring or dome shall be filled with non-shrink mortar, the inside wall of the riser finished/wet-brushed.

H. **Compaction** -- Compaction around storm drain manholes shall conform to structural backfill requirements per Caltrans Standard Specifications Section 19-3.

6-6 PIPE INSTALLATION -- All drainage improvements shall be conform to the following requirements:

A. **Excavation** -- Pipeline excavations shall be open-cut trenches, unless otherwise Specified on the approved improvement plans. Excavations shall apply to all

applicable Federal and State safety requirements. All work shall be conducted in such a manner as to prevent damage to the work or adjoining property.

Wherever the trench bottom is unstable, the area shall be excavated and an adequate amount of 1/2 inch crushed rock shall be compacted in place to provide a stable base for the pipe.

B. **Trench Width** -- Minimum trench width shall be the outside pipe diameter plus 12 inches, except for cast-in-place.

C. **Pipe Bedding** -- Pipes shall be placed on a firm bed of imported material conforming to Engineered Standards. Unless unstable pipe bedding subgrade needs to be removed, pipe bedding shall only be placed on native, undisturbed soil. Prior to placing pipe bedding, the trench bottom shall be free of any loose material.

D. **Laying Pipe** -- The pipe shall be laid up-stream with the bell or groove end of the pipe placed up-stream. The interior of the pipe shall be kept clean as the work progresses. For mortared joint, precast concrete pipe, the inside of each joint shall be wet swabbed with a brush until no mortar protrudes on the inside of the pipe. After mortaring, the exterior of each pipe joint shall be covered with a heavy paper membrane for protection. Pipe shall not be laid, when, in the opinion of the PWD Inspector, trench or weather conditions are unsuitable.

1. **Laying and Backfill of Polyvinyl Chloride (PVC) and High Density Polyethylene Pipe (HDPE)** -- Laying and backfill for these pipes shall conform to Caltrans Standard Specifications, and manufacturer's recommendations, ASTM D-2321 with the following modifications:

3. Due to the light weight characteristic of the pipe, extreme care shall be taken to avoid displacing the pipe during the backfilling operation. Following placement of the pipe on the required bedding and to the required grade, the pipe shall be stabilized in place with ballast. At a minimum, this shall be accomplished by loading the pipe down slowly and carefully with piles of embedment material to a minimum of one foot above the pipe on each joint and midway on each length. The pipe shall be kept centered in the trench during this operation.

b. The trench shall then be backfilled with embedment material 6 to 12 inches above the pipe, prior to continuing with the trench backfill operations.

c. Last joint to RCP pipe.

3. **Pipe Laying Tolerances** -- The pipes shall be laid true to line and grade with allowed tolerances of 0.03 foot above or below the design grade and 0.10 foot left or right of the design alignment.

3. **Trench Backfill** -- Initial backfill material shall be placed immediately after pipe joints have been completed, inspected and passed by the PWD Inspector. The material shall be carefully placed so as not to disturb or damage the pipe, and shall

be brought up evenly on both sides. Trench backfill shall be placed in 8" to 12" lifts depending on soil conditions, compaction equipment and methods.

G. **Cast-in-Place Concrete Pipe** -- Cast-in-place concrete pipe shall conform to provisions in Section 63 of the Caltrans Standard Specifications.

3. **Pavement Cutting and Repaving** -- When the trenchline is in an existing pavement area, the pavement shall be sawed or scored and broken ahead of trenching operations. The proper tools and equipment shall be used in marking and removing so that the pavement will be cut accurately to a neat and parallel line 12 inches wider on each side than the trench width required. All cuts in Portland Cement concrete pavements shall be sawcut with equipment approved by the PWD Inspector.

   Repaving shall be done in such a manner as to accurately match the cut pavement area with a similar pavement material.

6-7 MATERIALS

A. **Backfill Material** -- All drain pipe backfill material shall conform to Engineered Standards and may require testing for Town Engineer approval.

3. **Drop Inlets** -- All drop inlets shall conform to Standard Details SD-3 to SD-10. Concrete to be Class "A", reinforcing steel to conform to provisions in Section 52 of the Caltrans Standard Specifications.

C. **Lined Channels** -- All lined channels shall conform to Standard Details SD-18 and 19 and the following materials:

   1. **Air Blown Mortar** -- Air blown mortar shall conform to provisions in Section 53 of the Caltrans Standard Specifications.

   3. **Concrete** -- Concrete shall be either Class "A" concrete with Type II cement, sacked concrete, or doweled and sacked concrete. The minimum weight of sacked concrete shall be 60 pounds per sack.

   3. **Curing Compound** -- Curing Compound shall conform to provisions in Section 90-7.01B of the Caltrans Standard Specifications.

   4. **Expansion Joint Filler** -- Premolded expansion joint fillers shall be a minimum of 3/8 inch thick and conform to ASTM Designation D 1751.

   5. **Grouted Cobbles** -- Grouted cobbles shall require Class "A" concrete with the cobble mixture as follows: all retained on the 1-1/2" sieve; not more than 40 percent passing the 4" sieve; and 10" maximum size.

   3. **Weep Holes** -- All weep holes shall be 2 inches in diameter and made of: galvanized steel pipe, schedule 40 or better; PVC pipe, schedule 40 or better; or, ABS pipe, schedule 40 or greater.

7. **Welded Wire Fabric** -- Welded wire fabric to conform to ASTM Designation A 185.

3. **Manholes** -- All precast manhole barrels, risers, cones, flat tops and grade rings shall conform to ASTM Designation C478 and shall conform to dimensions shown on Standard Detail SD-23.

   3. **Bases** -- Bases shall be either precast or cast-in-place. Precast bases shall conform to ASTM Designation C478. Cast-in-place bases shall be Class "A", concrete with Type II cement. Slump shall not exceed 4 inches as determined by the slump cone method of ASTM Designation C143 or an equivalent slump as determined by Test Method No. California 533.

   2. **Cones** -- All cones shall conform to ASTM Designation C478.

   3. **Joints** -- Joints shall be made with either non-shrinking mortar or with plastic sealing compounds conforming to Federal Specifications SS-S-00210.

   3. **Manhole Frames and Covers** -- All castings for manhole frame castings, covers and other purposes shall be of cast iron and conform to ASTM Designation A 48, Class 30 and shall conform to dimensions shown on Standard Detail SD-22.

   5. **Mortar** -- Mortar used in finishing manholes and joints shall be non-shrinking and consist of 1 cubic foot of Portland Cement to 2 cubic feet of concrete sand.

   6. **Pipe Connections** -- Pipe connections for precast concrete tongue and groove pipe shall be made using mortar, as designated above.

E. **Outlet and Inlet Structures** -- All outlet structures shall conform to Standard Details SD-15 to SD-17.

F. **Slurry Cement Backfill** -- Slurry cement backfill shall conform to the requirements of Section 19 of the Caltrans Standard Specifications.

G. **Storm Drain Pipe** -- Storm drain pipe shall conform to the following:

   1. **Acrylonitrile-Butadiene Styrene (ABS)** -- ABS pipe shall meet the requirements of ASTM Designation D2680.

   2. **Cast-in-Place Concrete Pipe** -- Concrete shall be Class "A", 6 sack with Type II cement and shall conform to the requirements of Sections 63 and 90 of the Caltrans State Specifications.

   3. **High Density Polyethylene Pipe (HDPE)** -- HDPE shall be Type "S", conforming to Section 64 of the Caltrans Standard Specifications. Joint connections shall be water tight. A listing of approved manufacturers include ADS, Inc., Hancor or approved equal.

4. **Polyvinyl Chloride Pipe (PVC)** -- PVC shall conform to the following standards based on pipe diameter:

Pipe Diameter	ASTM Designation
10" through 15"	D3034, SDR 35
18" through 27"	F794, F2241, SDR 51
30" through 48"	F794

All PVC pipe joints shall be integral wall bell and spigot configuration, factory formed. All rubber rings shall conform to ASTM Designation F477.

5. **Precast Reinforced Concrete Pipe (RCP)** -- RCP shall conform to ASTM Designation C76 for Class I, II, III, IV or V. The class of pipe shall be based on the designation conforming to the approved plans.

Joints for RCP shall be tongue and groove, bell and spigot, or other approved type, and shall be of such a design that when properly laid, they shall have a smooth and uniform interior surface. Each joint shall be sealed to prevent leakage. Sealing materials shall consist of either cement mortar, rubber gasketed joints or resilient materials conforming to Section 65 of the Caltrans Standard Specifications.

6. **Alternate Pipe Materials** -- Alternate pipe materials such as spiral rip aluminum, aluminum coated steel or other materials may be submitted for approval by the Town Engineer with soils analysis and other technical data.

7. All non-rigid pipe including and not limited to HDPE pipe shall be mandrel tested (5%).

6-8 HYDROLOGY

Refer to the Placer County Flood Control District Stormwater Management Manual for general hydrologic guidelines and rainfall Depth Durantion Frequency data. All modeling and signing to be approved by DPW prior to approving development drawings.

STORM DRAIN STANDARD DETAILS

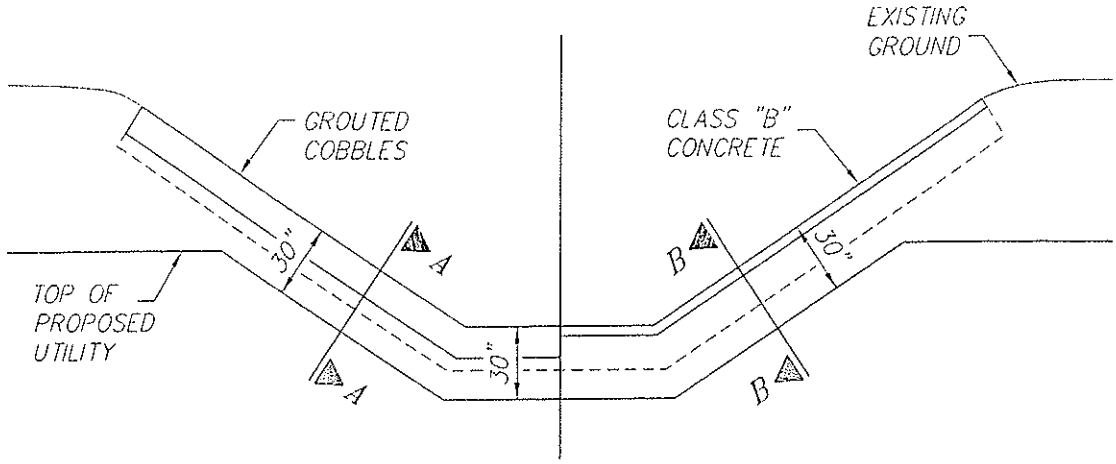

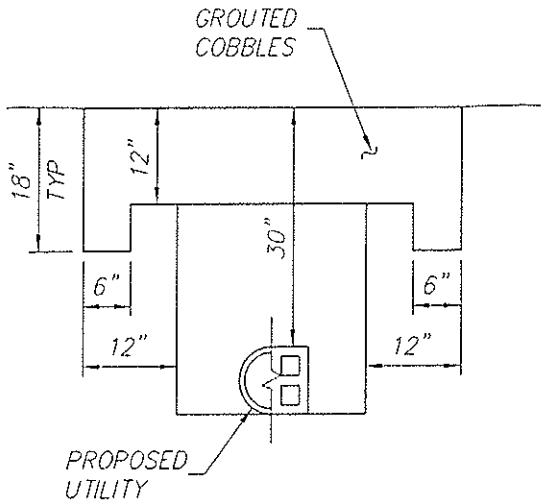

SECTION A–A

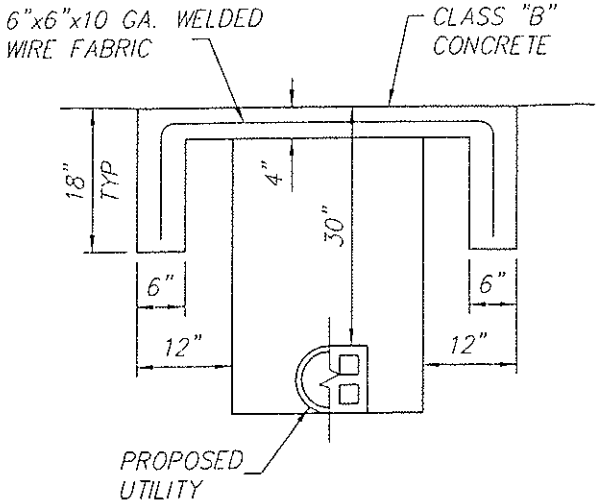

SECTION B–B

NOTES:

1. ALL UTILITY CROSSINGS OF EXISTING STREAMS SHALL BE AT LEAST 30" BELOW EXISTING CHANNEL SIDES AND BOTTOMS. DEEPER PLACEMENT MAY BE REQUIRED IF FUTURE CHANNEL IMPROVEMENTS ARE ANTICIPATED.
2. THE CUT SHALL BE SEALED AS SHOWN WITH GROUTED COBBLES, CLASS "B" CONCRETE OR OTHER APPROVED MATERIAL TO A WIDTH 12" EACH SIDE OF THE UTILITY TRENCH. ALL NATURAL STREAMS, AS SHOWN ON THE NATURAL STREAMS PLAN, SHALL UTILIZE GROUTED COBBLES.

APPROVED BY: BRIAN J. FRAGIAO DIRECTOR OF PUBLIC WORKS/TOWN ENGINEER REVISED:		TOWN OF LOOMIS **UTILITY STREAM CROSSING DETAIL** DEPARTMENT OF PUBLIC WORKS	**SD-1**

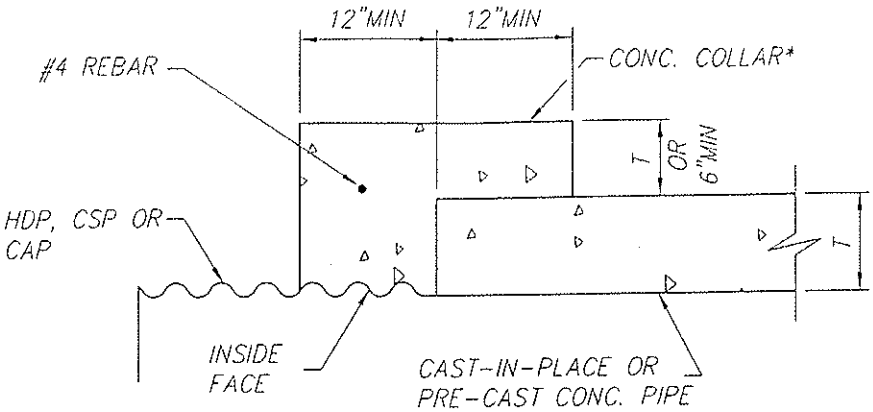

CAST-IN-PLACE OR PRE-CAST CONCRETE PIPE TO CSP OR CAP

*TRANSITION OF PIPE MATERIAL AT MANHOLES IS PERFERRED

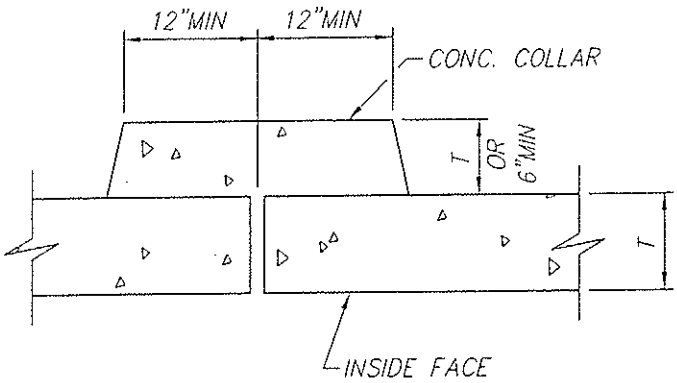

CONCRETE PIPE TO CONCRETE PIPE WITHOUT STANDARD JOINT

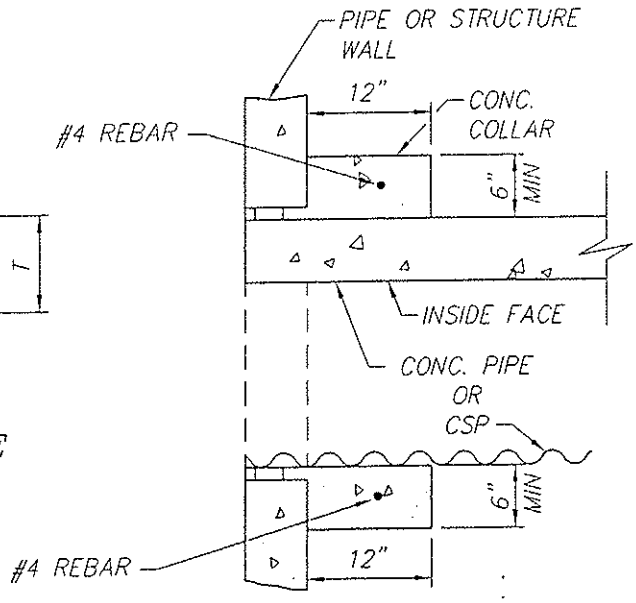

CONCRETE PIPE, CAP CSP INTO EXISTING PIPE OR STRUCTURE

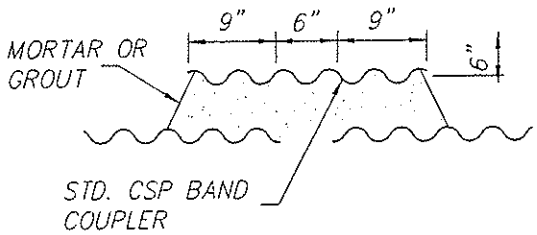

PIPES OF DISSIMILAR METALS

APPROVED BY: BRIAN J. FRAGIAO DIRECTOR OF PUBLIC WORKS/TOWN ENGINEER REVISED:		TOWN OF LOOMIS **PIPE CONNECTIONS DETAIL** DEPARTMENT OF PUBLIC WORKS	**SD-2**

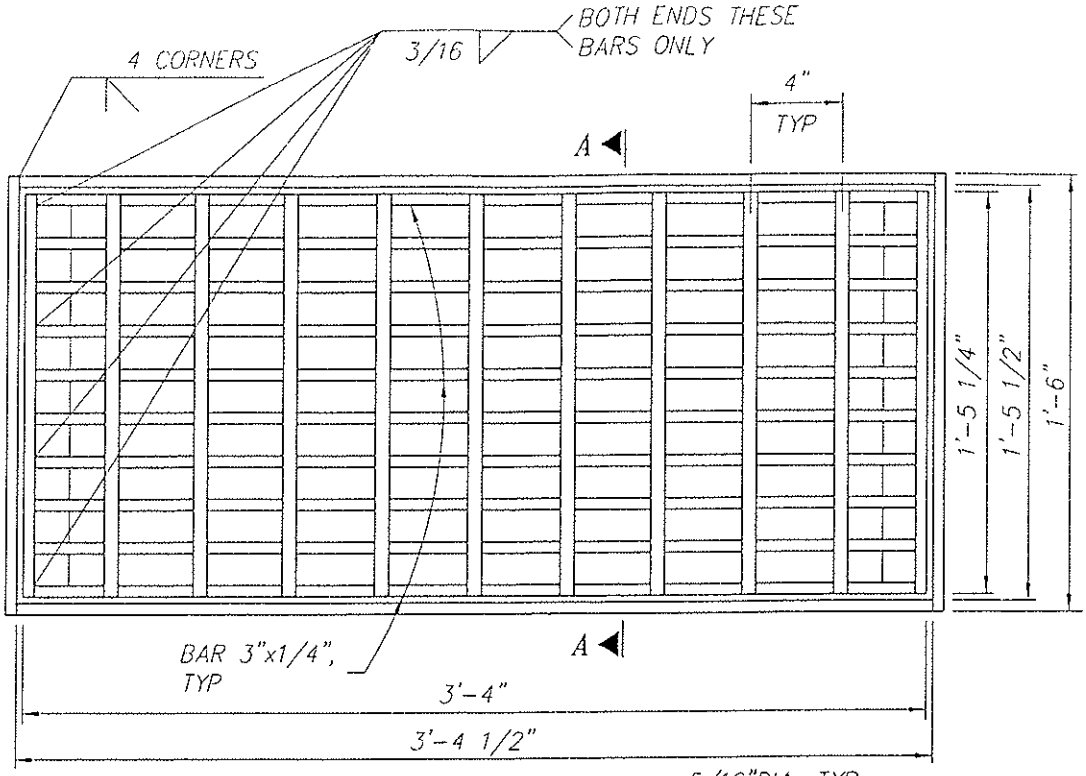

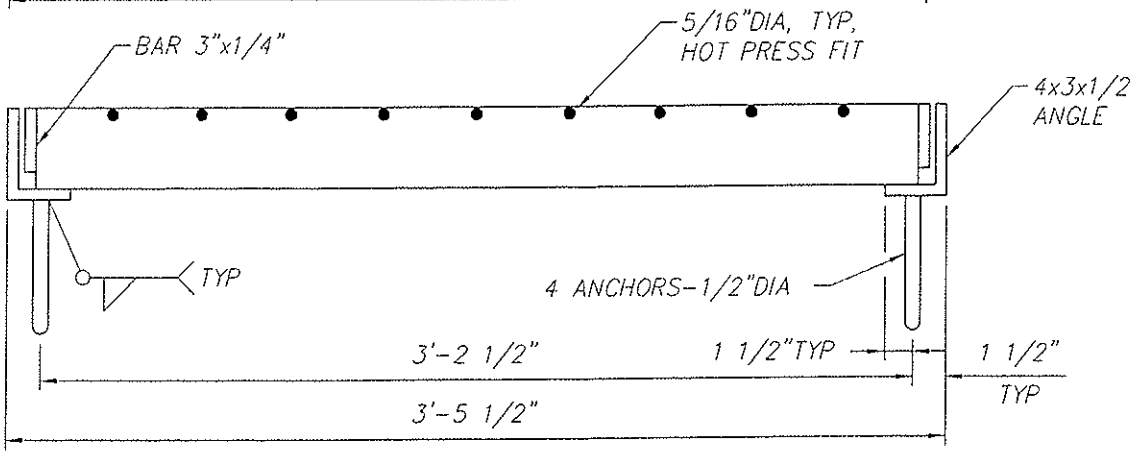

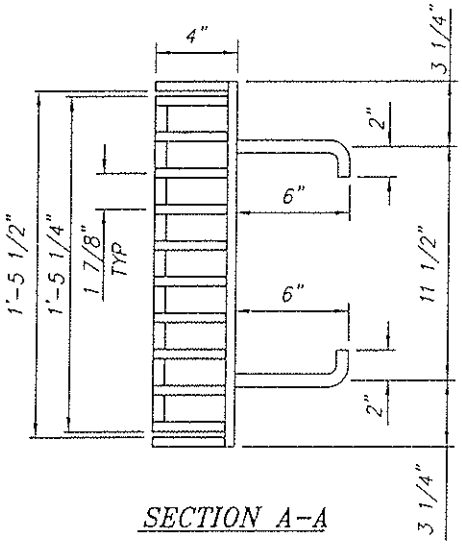

SECTION A-A

NOTE: AT THE CONTRACTOR'S OPTION, END SPACING OF 5/16" CROSS RODS MAY BE 2". INTERIOR SPACING SHALL REMAIN 4".

APPROVED BY: BRIAN J. FRAGIAO DIRECTOR OF PUBLIC WORKS/TOWN ENGINEER REVISED:		TOWN OF LOOMIS **DROP INLET FRAME AND GRATE TYPE "B", "C", DROP INLETS** DEPARTMENT OF PUBLIC WORKS	**SD-3**

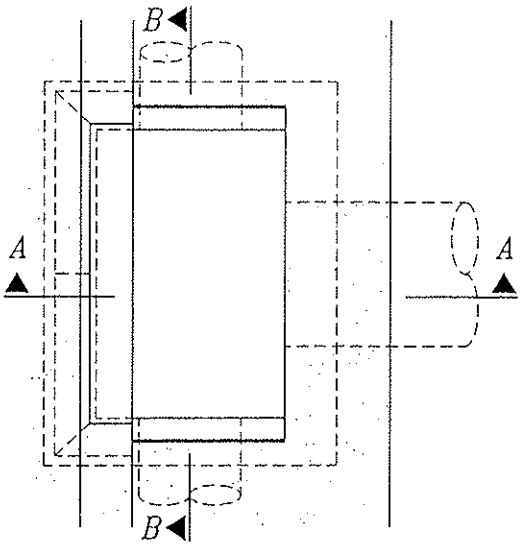

PLAN

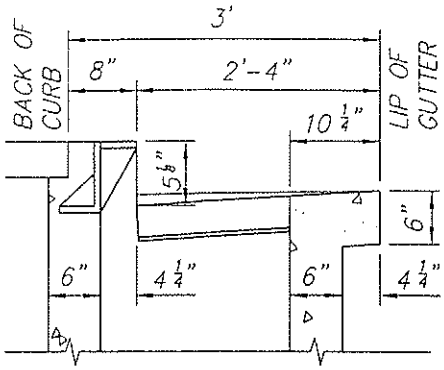

TYPE 1 CURB
SECTION A-A

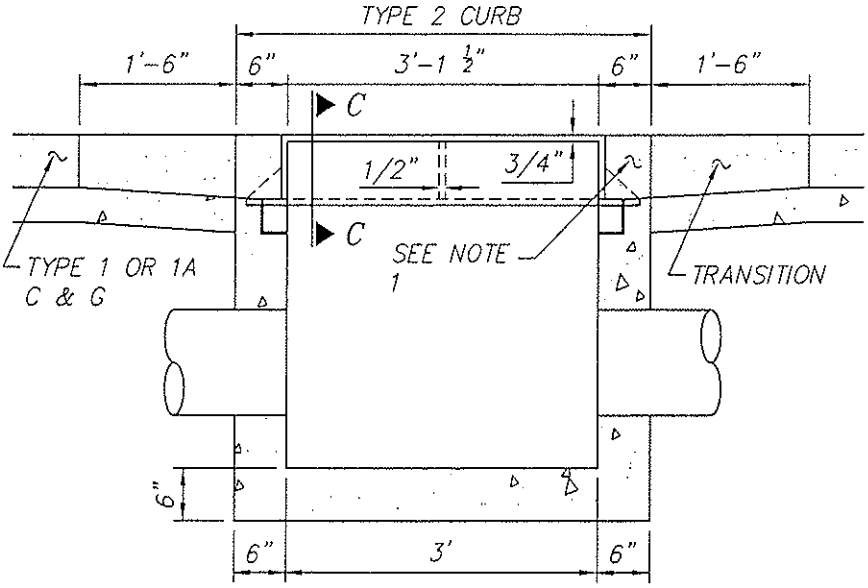

SECTION B-B

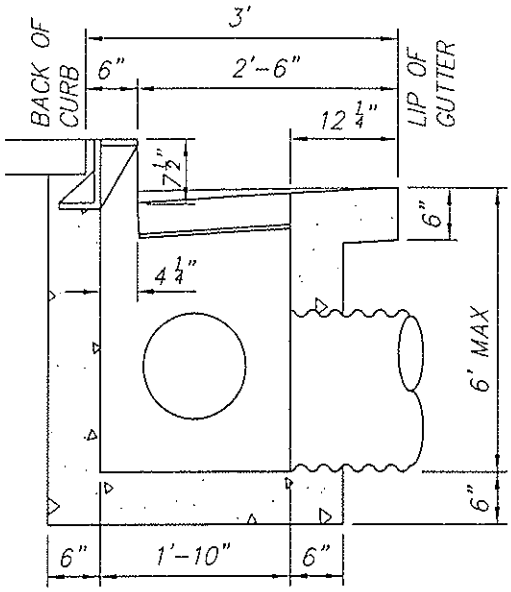

TYPE 2 CURB
SECTION A-A

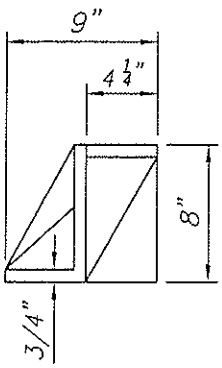

OPEN-BACK HOOD
SECTION C-C

NOTES:

1. CONSTRUCT 6" OF VERTICAL CURB BEFORE BEGINNING TRANSITION ON TYPE 1 C & G.
2. SEE DRAWING SD-5 FOR GUTTER DEPRESSION
3. BOTTOM OF INLET SHALL BE PLACED PRIOR TO OR AT THE SAME TIME AS SIDE WALLS.
4. FRAME AND GRATE SHALL CONFORM TO DRAWING SD-3.
5. OPEN-BACK HOOD SHALL BE CAST IRON. TOP OF HOOD SHALL HAVE THE "NO DUMPING FLOWS TO CREEK" STAMP.
6. REINFORCING STEEL OR MESH TO BE USED FOR DEPTHS GREATER THAN 4'.

APPROVED BY: BRIAN J. FRAGIAO DIRECTOR OF PUBLIC WORKS/TOWN ENGINEER REVISED:		TOWN OF LOOMIS **DROP INLET TYPE "B"** DEPARTMENT OF PUBLIC WORKS	**SD-4**

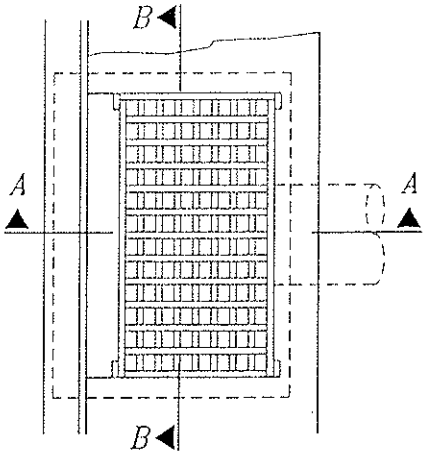

PLAN

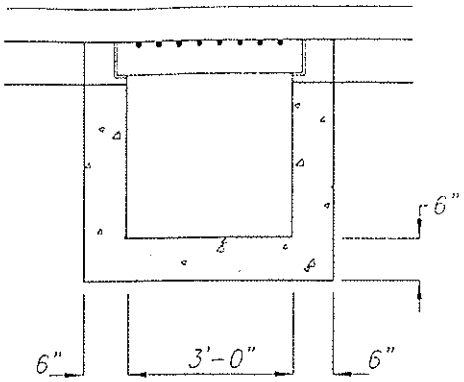

SECTION B-B

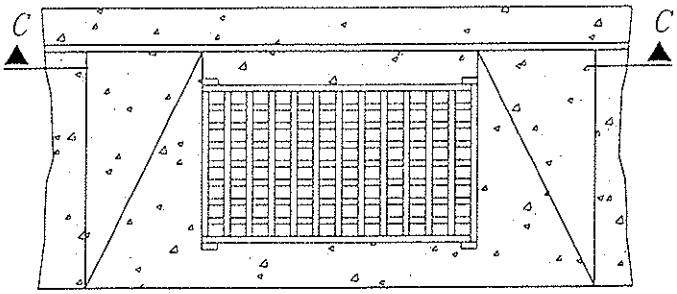

PLAN
STANDARD DEPRESSION

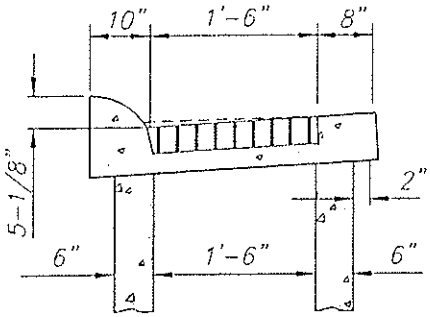

TYPE 1 CURB SECTION A-A

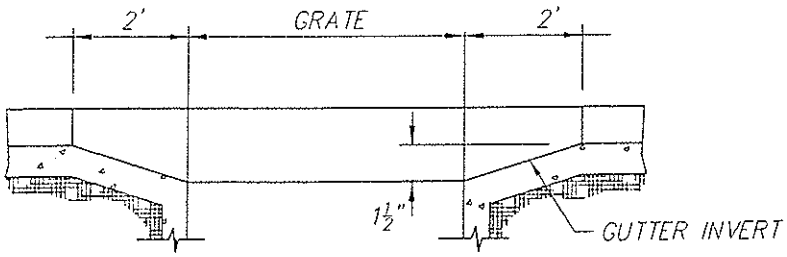

STANDARD DEPRESSION SECTION C-C

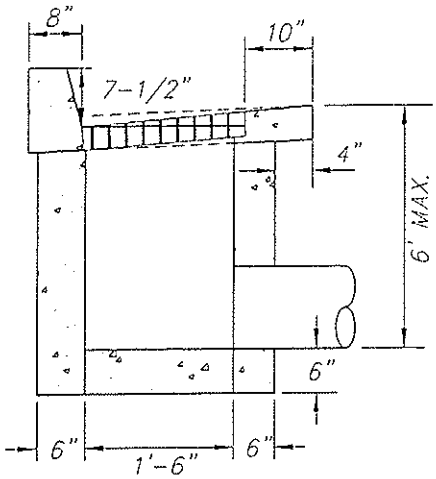

TYPE 2 CURB SECTION A-A

NOTES:

1. BOTTOM OF INLET SHALL BE PLACED PRIOR TO OR AT THE SAME TIME AS SIDE WALLS.
2. FRAME AND GRATE SHALL CONFORM TO DRAWING SD-3.
3. REINFORCING STEEL OR MESH TO BE USED IN DEPTHS GREATER THEN 4'

APPROVED BY: BRIAN J. FRAGIAO DIRECTOR OF PUBLIC WORKS/TOWN ENGINEER REVISED:		TOWN OF LOOMIS **DROP INLET TYPE "C"** DEPARTMENT OF PUBLIC WORKS	SD-5

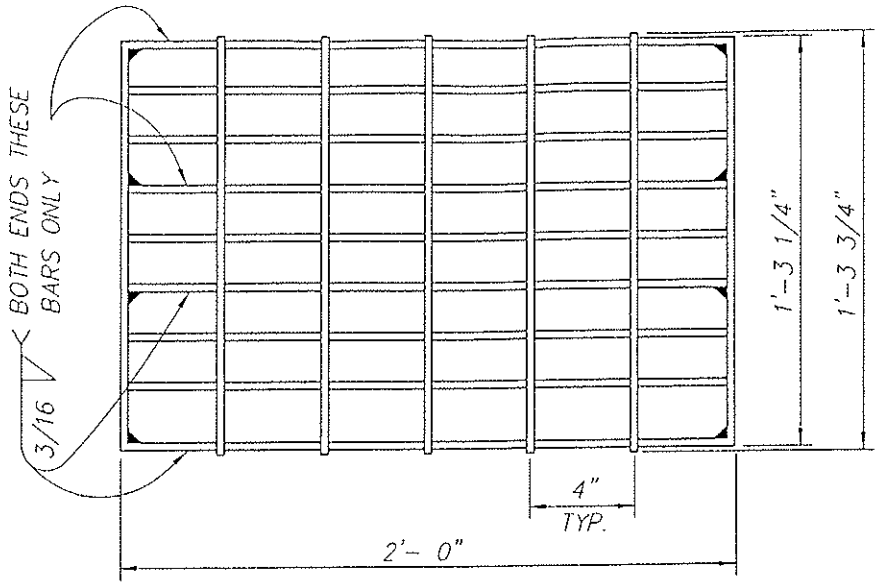

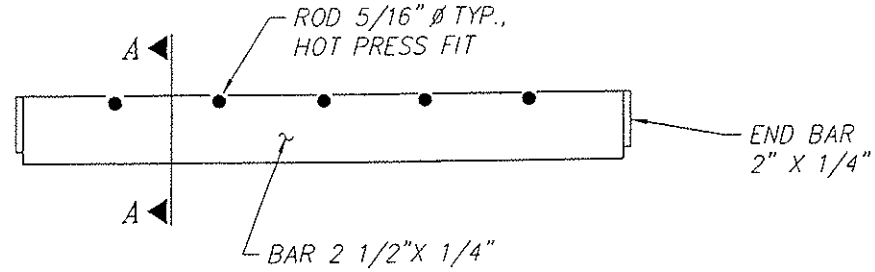

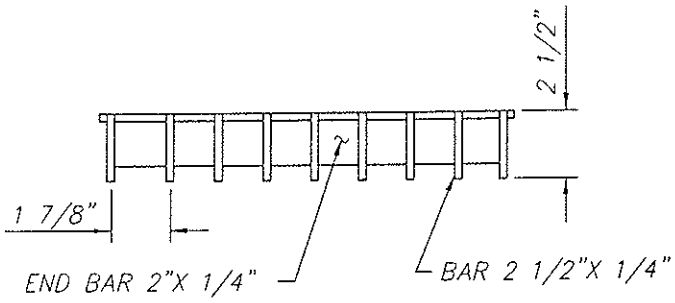

SECTION A-A

NOTES:

1. *INSTALLED GRATE SHALL BE PERMANENTLY SECURED TO FRAME WITH 12" LENGTH OF GALVANIZED CHAIN.*
2. *AT THE CONTRACTOR'S OPTION, END SPACING OF 5/16" CROSS RODS MAY BE 2". INTERIOR SPACING SHALL REMAIN AT 4".*

APPROVED BY: BRIAN J. FRAGIAO DIRECTOR OF PUBLIC WORKS/TOWN ENGINEER REVISED:		TOWN OF LOOMIS **DROP INLET GRATE FOR TYPE "D" & "E" DROP INLETS** DEPARTMENT OF PUBLIC WORKS	**SD-6**

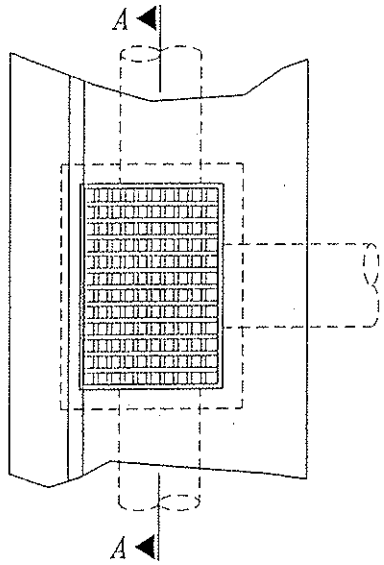

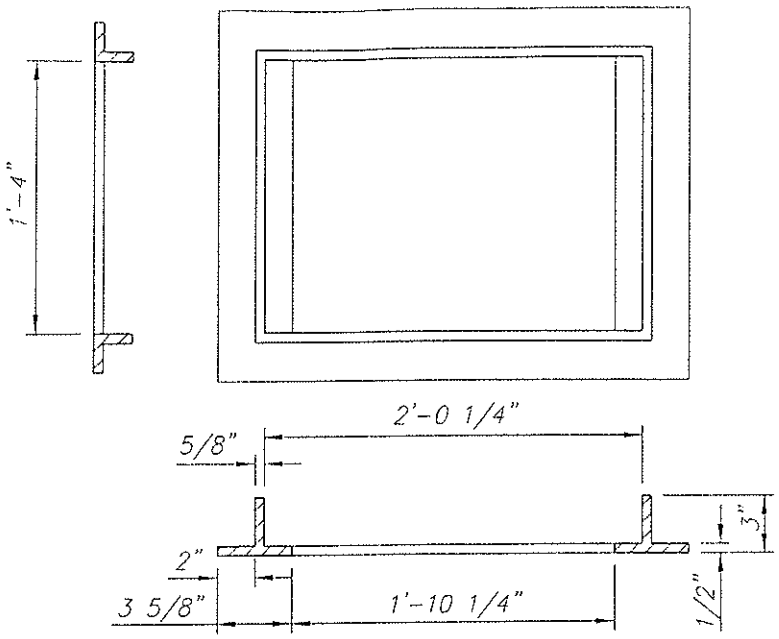

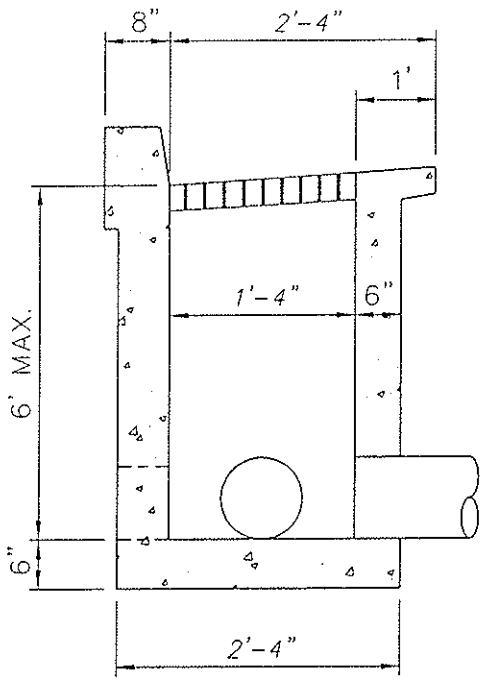

TYPE 2 VERTICAL CURB

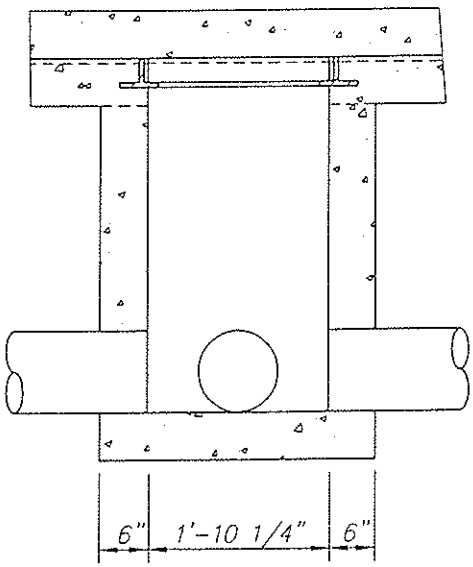

SECTION A-A

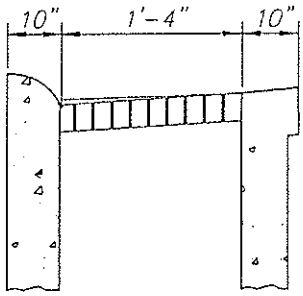

TYPE 1 CURB

NOTES:

1. SEE DRAWING SD-5 FOR GUTTER DEPRESSION
2. SEE DRAWING SD-6 AND SD-8 FOR FRAME & GRATE DETAIL.
3. 12" LENGTH OF 1/4" GALVANIZED CHAIN TO BE PERMANENTLY AFFIXED TO THE GRATE AND ONE CORNER OF THE INLET FRAME ADJACENT TO THE CURB.
4. BOTTOM OF INLET SHALL BE PLACED PRIOR TO OR AT THE SAME TIME AS SIDE WALLS.

APPROVED BY: BRIAN J. FRAGIAO DIRECTOR OF PUBLIC WORKS/TOWN ENGINEER REVISED:		TOWN OF LOOMIS **DROP INLET TYPE "D"** DEPARTMENT OF PUBLIC WORKS	**SD-7**

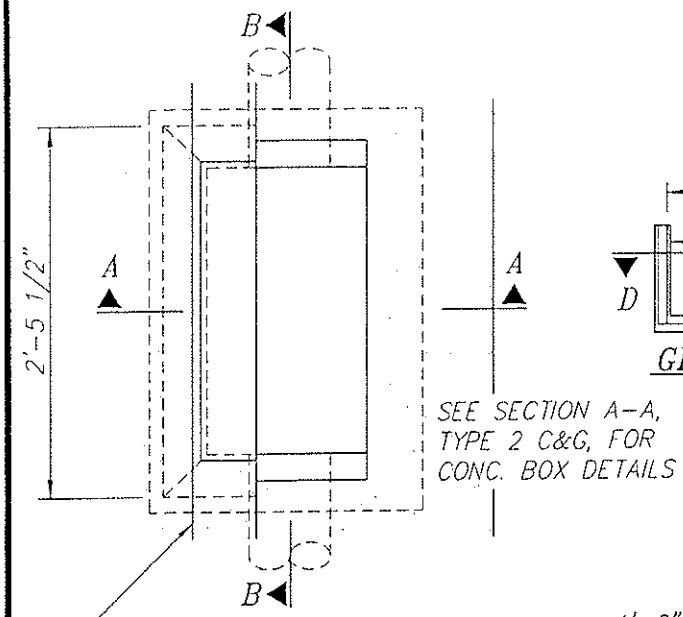

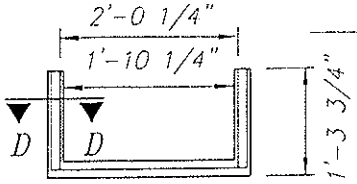

GRATE FRAME

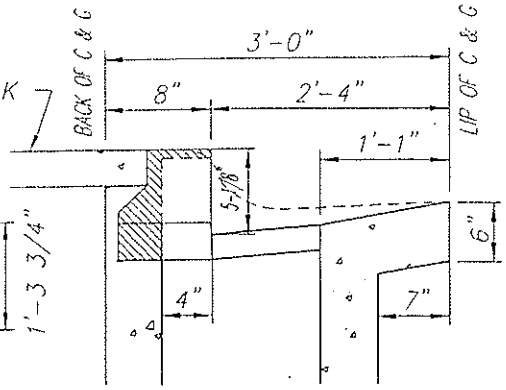

TYPE 1 CURB
SECTION A-A

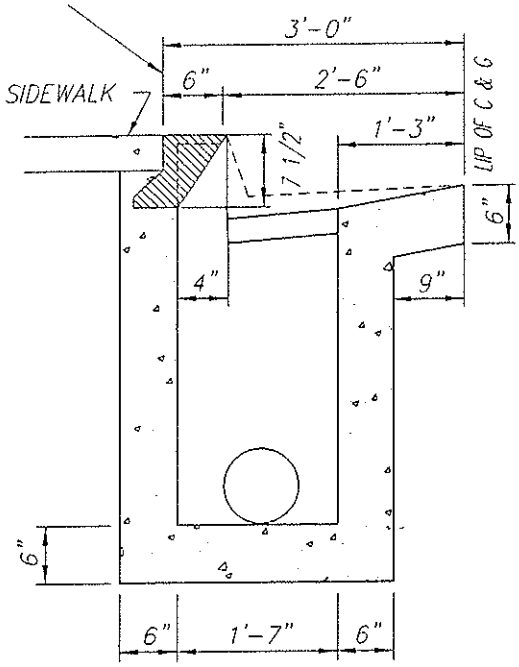

TYPE 2 CURB
SECTION A-A

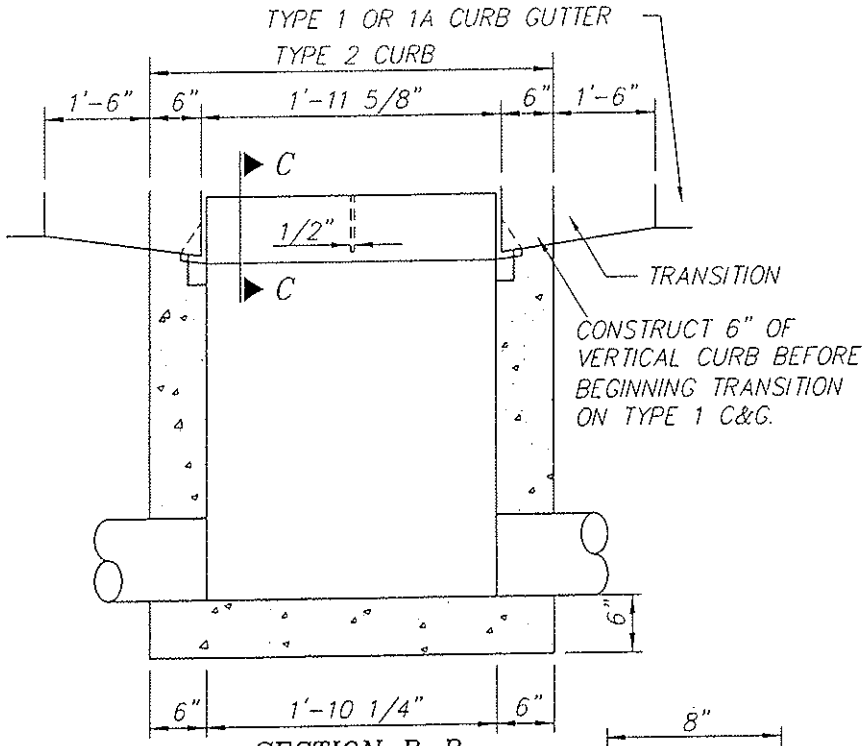

SECTION B-B

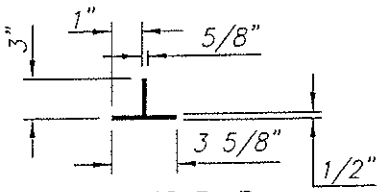

SECTION D-D

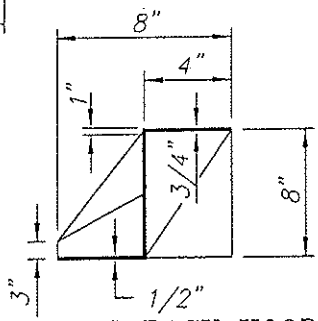

OPEN-BACK HOOD
SECTION C-C

NOTES:

1. SEE DRAWING SD-5 FOR GUTTER DEPRESSION
2. BOTTOM OF INLET SHALL BE PLACED PRIOR TO OR AT THE SAME TIME AS THE SIDEWALLS.
3. SEE DRAWING SD-6 FOR GRATE DETAIL.
4. THIS STRUCTURE IS TO SERVE ONLY TO PICK UP GUTTER DRAINAGE OR AS A JUNCTION BOX FOR SMALL PIPES IN A LONGITUDINAL DIRECTION ONLY.
5. 12" LENGTH OF 1/4" GALVANIZED CHAIN TO BE PERMANENTLY AFFIXED TO THE GRATE AND ONE CORNER OF THE INLET FRAME ADJACENT TO THE CURB.
6. OPEN-BACK HOOD & GRATE FRAME SHALL BE CAST IRON.

APPROVED BY: BRIAN J. FRAGIAO DIRECTOR OF PUBLIC WORKS/TOWN ENGINEER REVISED:		TOWN OF LOOMIS **DROP INLET TYPE "E"** DEPARTMENT OF PUBLIC WORKS	SD-8

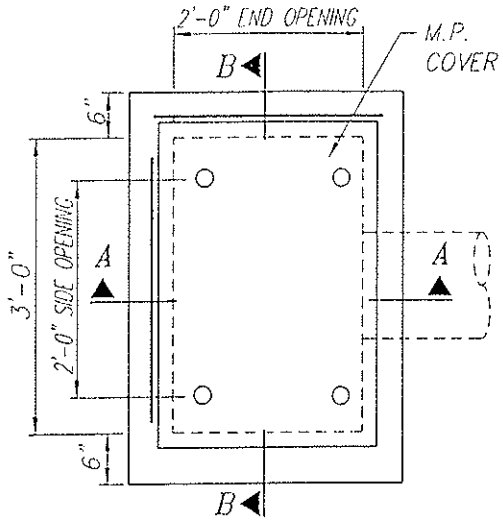

PLAN

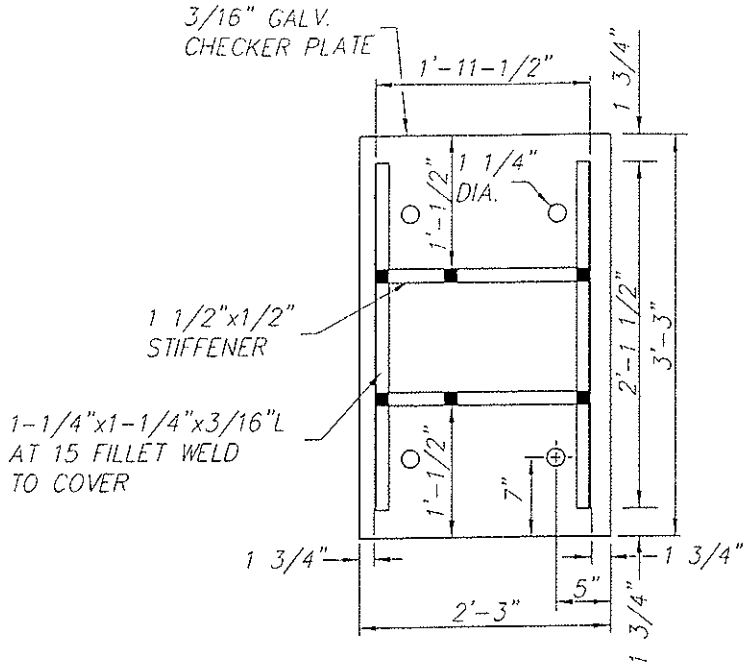

METAL COVER
(UNDERSIDE)

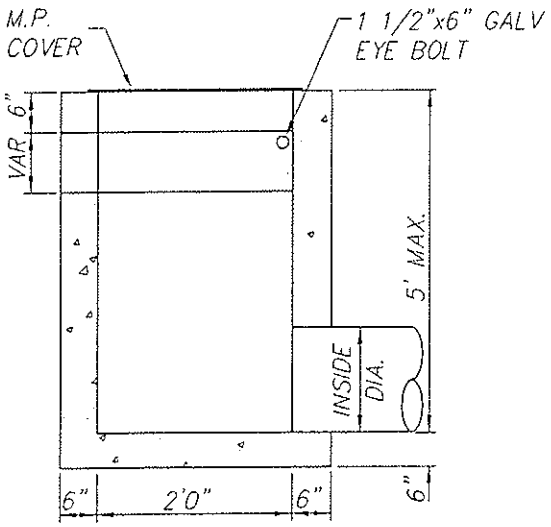

SECTION A-A

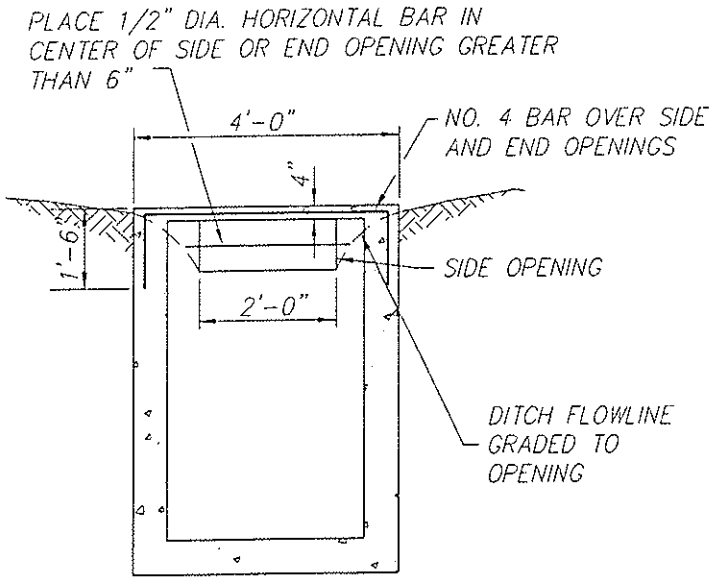

SECTION B-B

NOTES:

1. TOP OF WALLS TO BE FINISHED TO A FLAT PLANE TO PROVIDE EVEN BEARING FOR PLATE COVER.
2. PROVIDE 1/4" x 18" GALV. CHAIN WELD TO COVER AND EYE BOLT.
3. PROVIDE END OR SIDE OPENINGS AS SHOWN ON PLAN OR CROSS SECTION AND EYE BOLT.
4. METAL PLATE COVER TO BE GALVANIZED.

APPROVED BY: BRIAN J. FRAGIAO DIRECTOR OF PUBLIC WORKS/TOWN ENGINEER REVISED:		TOWN OF LOOMIS **DROP INLET TYPE "F"** DEPARTMENT OF PUBLIC WORKS	**SD-9**

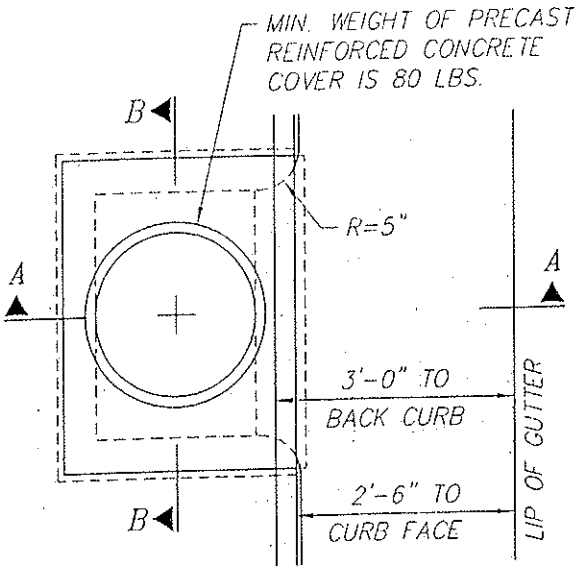

PLAN

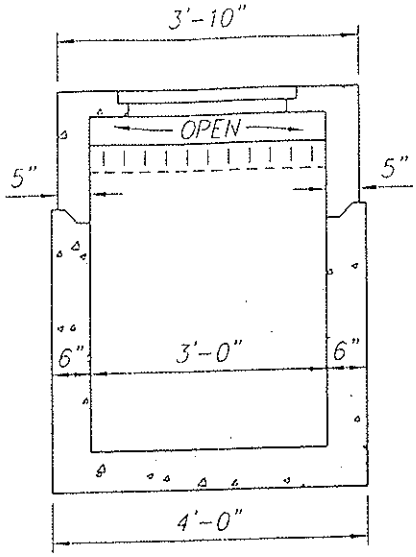

SECTION B-B

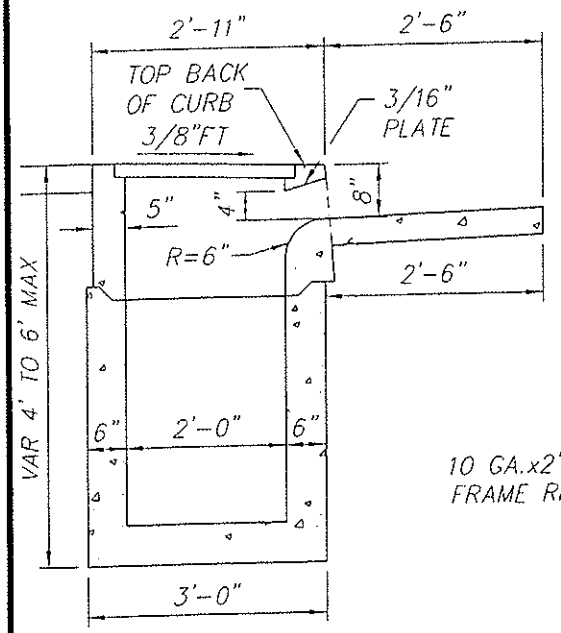

SECTION A-A

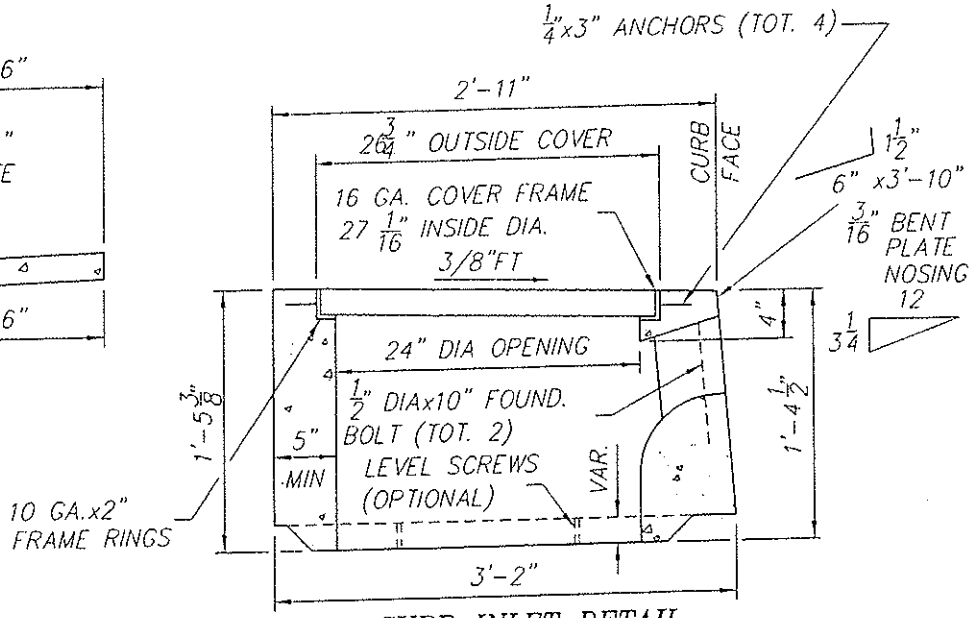

CURB INLET DETAIL

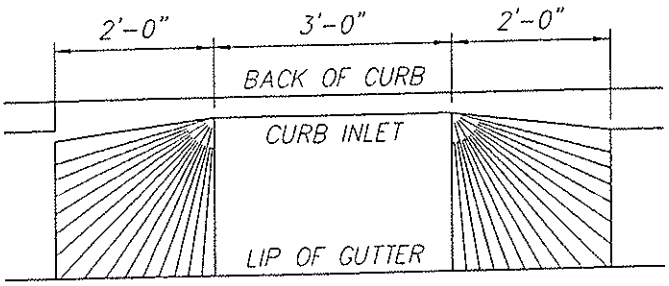

GUTTER TRANSITION PLAN

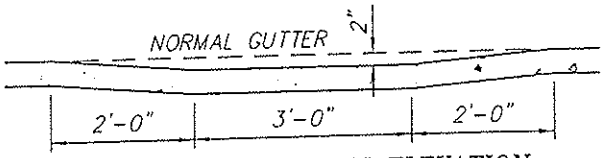

GUTTER TRANSITION ELEVATION

NOTES:

1. CURB INLET ASSEMBLY MAY BE PRECAST CONCRETE, FIBER GLASS FORMLINER WITH CLASS "B" P.C.C. OR FORMED AND CAST-IN-PLACE P.C.C.
2. ALL METAL SHALL BE HOT DIPPED GALV. ASTM A123.

APPROVED BY: BRIAN J. FRAGIAO DIRECTOR OF PUBLIC WORKS/TOWN ENGINEER REVISED:		TOWN OF LOOMIS **DROP INLET TYPE "G"** DEPARTMENT OF PUBLIC WORKS	SD-10

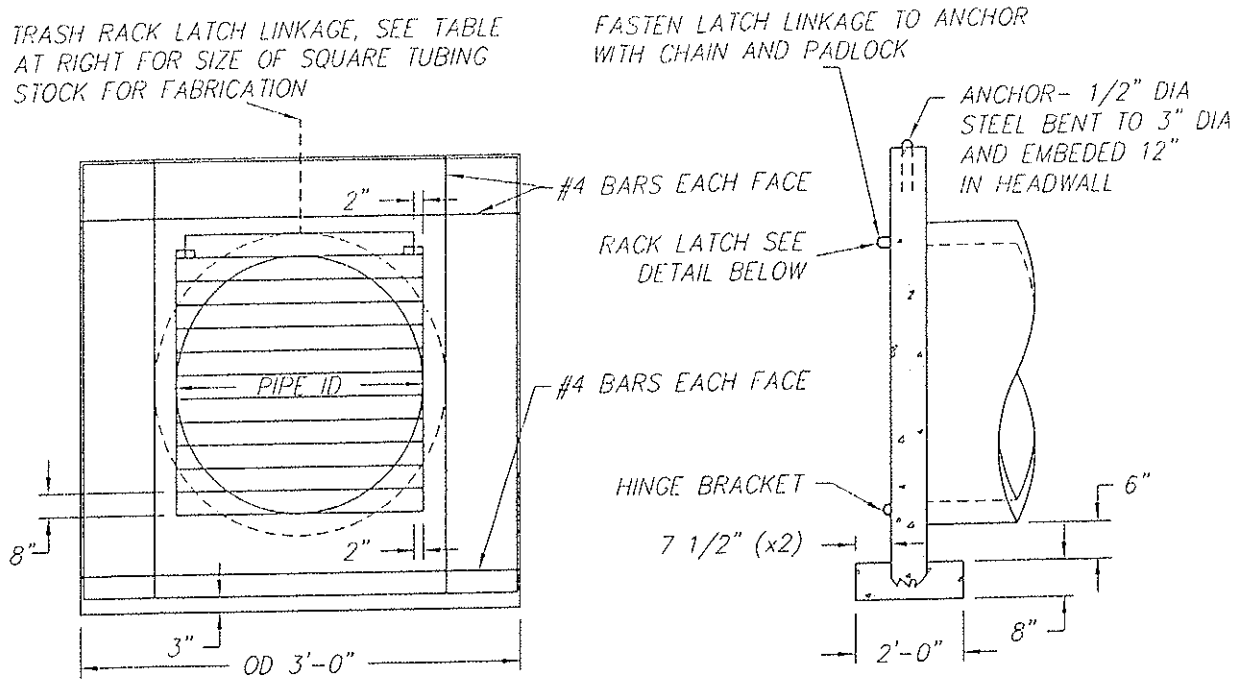

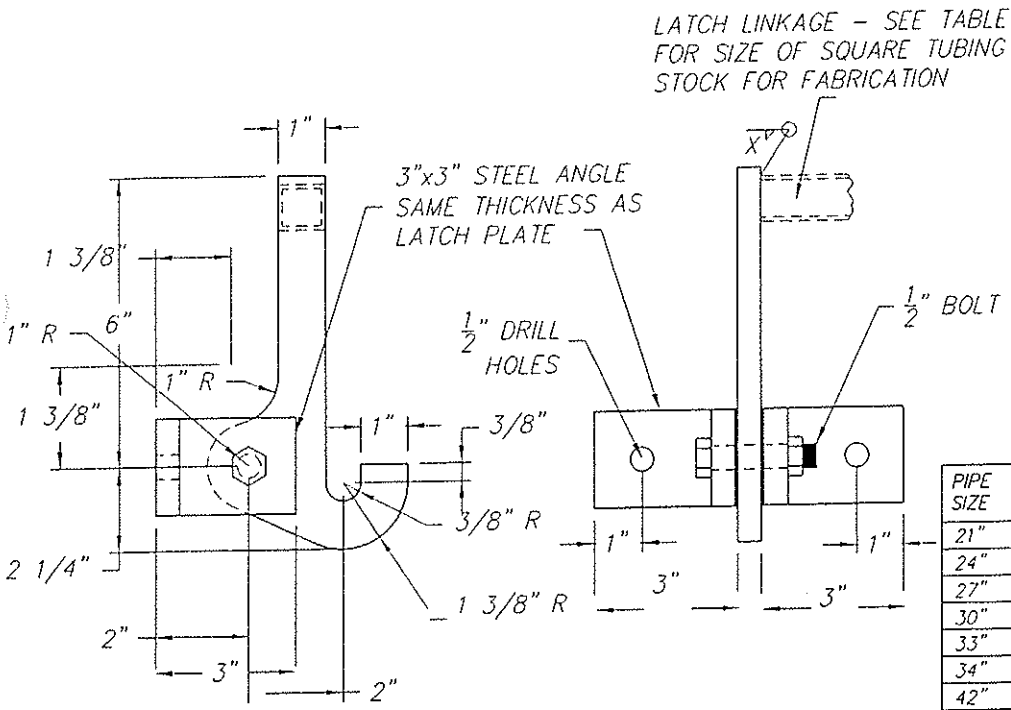

PIPE SIZE	RACK BAR SIZE	LATCH PLATE THICKNESS	LATCH PLATE SIZE
21"	#4	1/4"	1",.095" THICK
24"	*	*	*
27"	#5	*	*
30"	*	3/8"	*
33"	#6	*	*
34"	*	*	1",.133" THICK
42"	#7	*	*
48"	*	1/2"	*
54"	*	*	*
60"	#8	*	*
66"	*	*	*
72"	*	*	*
84"	*	*	*

NOTES:

1. ENTIRE RACK TO BE WELDED REINFORCING STEEL OR ROUND BARS OF EQUAL DIA WITH HORIZONTAL BARS BEING 8" CENTER TO CENTER
2. USE CLASS "B" CONCRETE.
3. ROOM SHALL BE PROVIDED DOWNSTREAM TO LAY RACK FLAT.
4. FASTEN LATCH BRACKET, TO HEADWALL WITH 1/2"x6" BOLTS
5. WHEN RACK BAR SHALL BE TIGHT AGAINST THE TOP OF THE HINGE BRACKET SO THAT THE RACK CANNOT BE LIFTED OFF THE LATCH.
6. FABRICATE HINGE BRACKET FROM #4 RE-BAR.
7. ALL REINFORCING STEEL SHALL HAVE 2" EMBEDMENT EXCEPT AS NOTES

APPROVED BY:

BRIAN J. FRAGIAO
DIRECTOR OF PUBLIC WORKS/TOWN ENGINEER

REVISED:

TOWN OF LOOMIS

PIPE OUTFALL-ACCESS CONTROL RACK

DEPARTMENT OF PUBLIC WORKS

SD-11

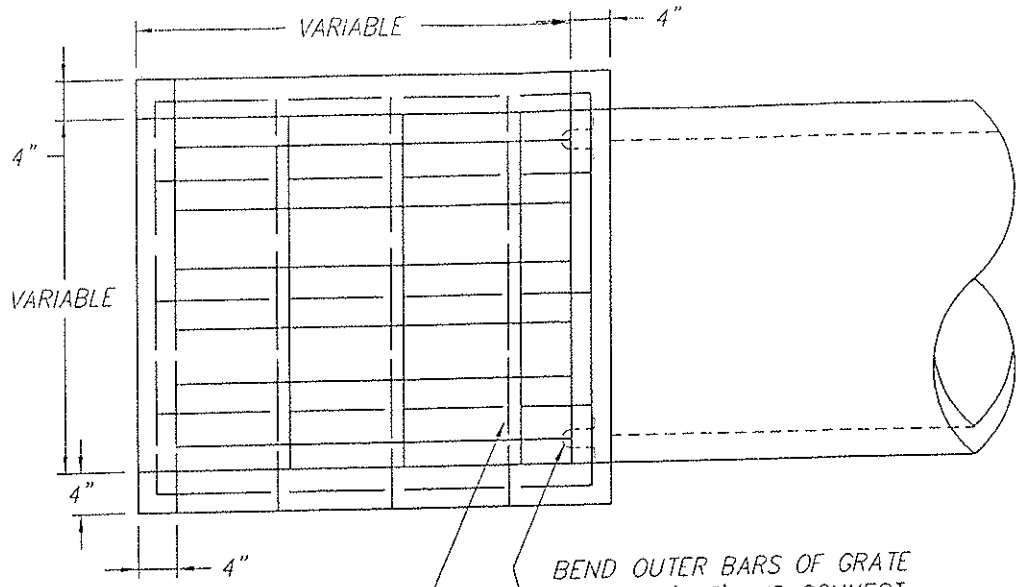

TOP VIEW

BEND OUTER BARS OF GRATE INTO AN 'EYE' AND CONNECT TO 'EYE' OF 'U' BARS SET INTO WALL.

CONSTRUCT TRASH RACK OF #5 BARS 8" CENTERS VERTICAL AND 16" CENTERS HORIZONTAL.

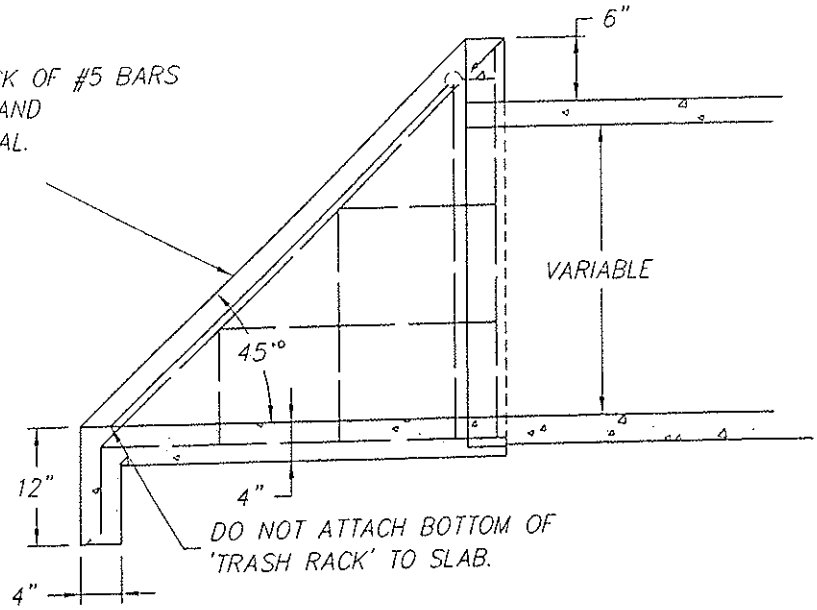

DO NOT ATTACH BOTTOM OF 'TRASH RACK' TO SLAB.

SIDE VIEW

NOTE: ALL REINFORCING TO BE #4 @ 12"
USE CLASS 'B' CONCRETE

APPROVED BY: BRIAN J. FRAGIAO DIRECTOR OF PUBLIC WORKS/TOWN ENGINEER REVISED:		TOWN OF LOOMIS PIPE INLET STRUCTURE AND TRASH RACK (30" PIPE & SMALLER) DEPARTMENT OF PUBLIC WORKS	SD-12

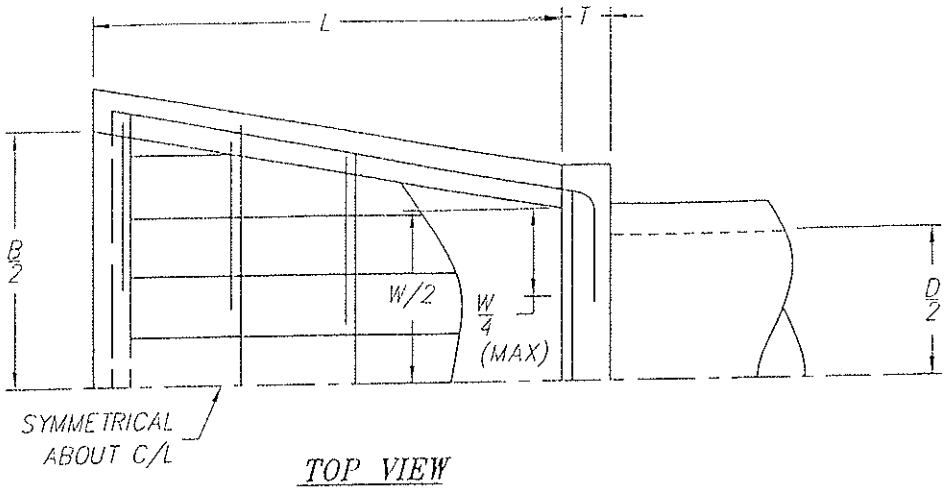

TOP VIEW

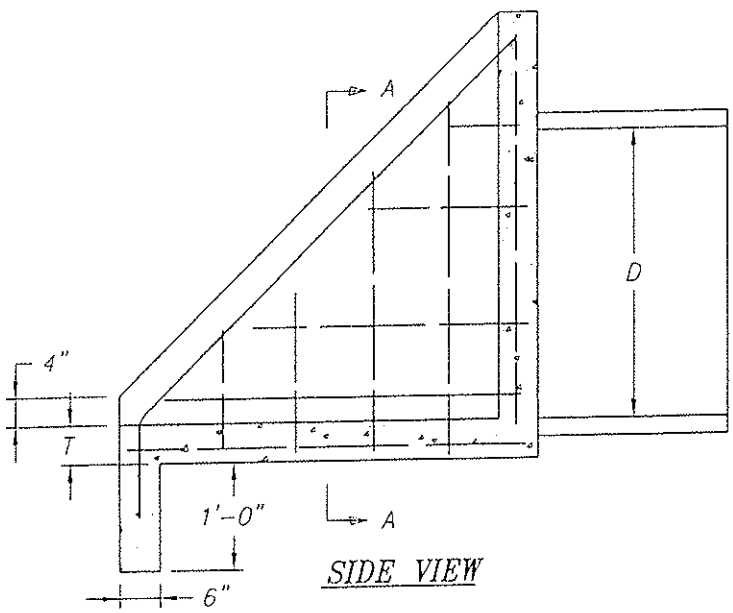

SIDE VIEW

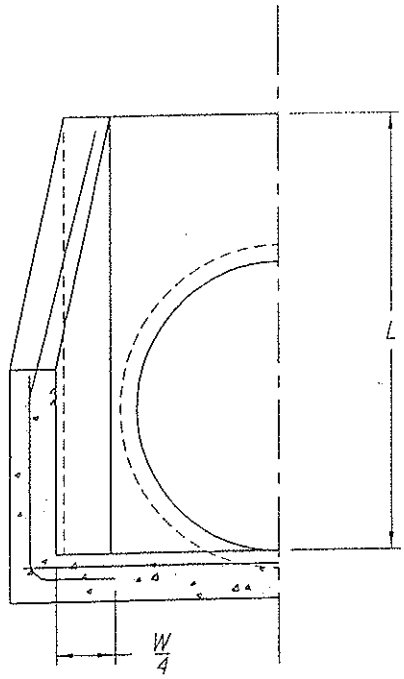

HALF SECTION A-A

DIMENSIONS AND REINFORCING

D	W	B	L	T	ALL REINFORCING
33"	3'-3"	5'-3"	4'-0"	6"	#3 @ 12"
36"	3'-8"	5'-8"	4'-2"	6"	#3 @ 12"
42"	4'-4"	6'-4"	4'-8"	6"	#3 @ 12"
48"	4'-10"	7'-2"	5'-2"	8"	#6 @ 12"
54"	5'-4"	8'-0"	6'-0"	8"	#6 @ 12"
60"	6'-0"	8'-10"	6'-6"	8"	#6 @ 12"

NOTES:

1. "B" MAY BE REDUCED IF REQUIRED BY CHANNEL DIMENSIONS.
2. REINFORCING BAR SPACING SHOWN IS MAXIMUM SPACING.
3. USE CLASS 'B' CONCRETE.

APPROVED BY:

BRIAN J. FRAGIAO
DIRECTOR OF PUBLIC WORKS/TOWN ENGINEER

REVISED:

TOWN OF LOOMIS

PIPE INLET STRUCTURE

DEPARTMENT OF PUBLIC WORKS

SD-13

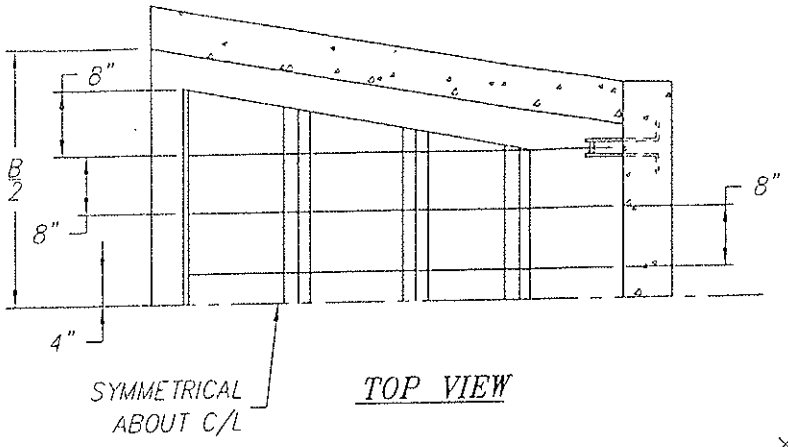

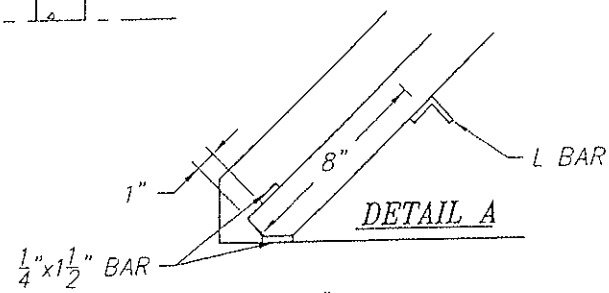

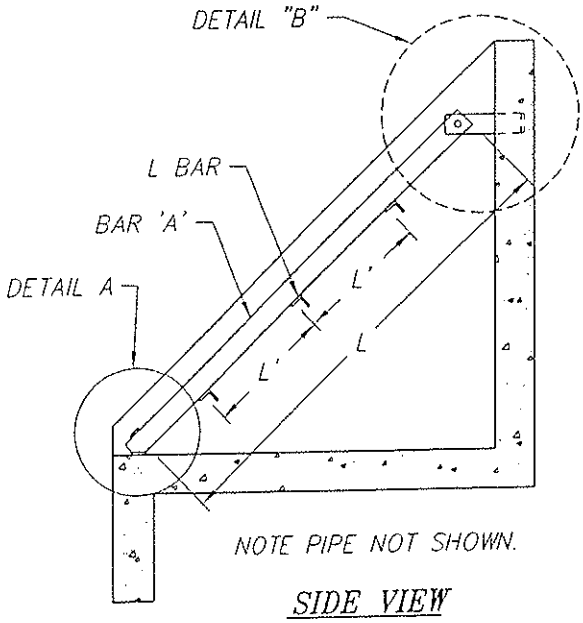

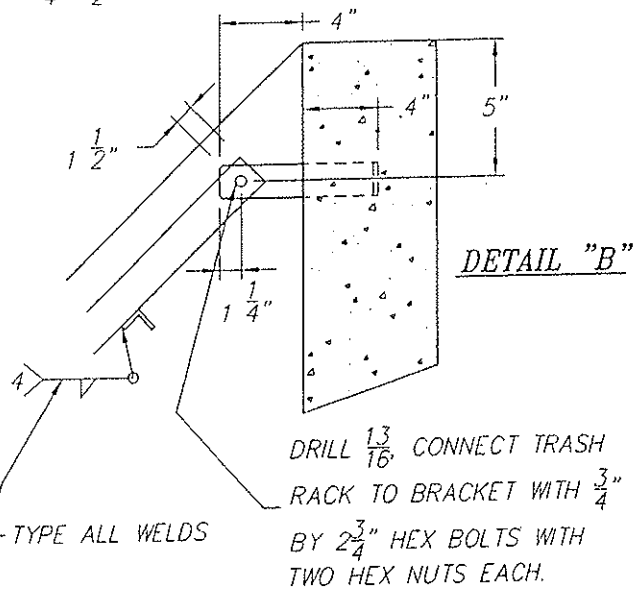

TRASH RACK DIMENSIONS

DIA.	NUMBER & SIZE		L	L'	S	H
	BAR 'A'	L BAR				
33"	8-3/8" x 2-1/2"	3-2 x 2 x 1/4	3'-1"	1'-10"	8"	3'-8"
36"	8-3/8" x 2-1/2"	3-2 x 2 x 1/4	3'-4"	1'-11"	8"	3'-10"
42"	9-3/8" x 2-1/2"	3-2 x 2 x 1/4	5'-11"	2'-3"	9"	4'-4"
48"	9-3/8" x 2-1/2"	4-2 x 2 x 1/4	6'-7"	1'-9"	10"	4'-10"
54"	10-3/8" x 3"	4-3 x 3 x 1/4	7'-9"	2'-1.5"	10.5"	5'-8"
60"	11-3/8" x 3-1/2"	4-3 x 3 x 1/4	8'-5"	2'-4"	11"	6'-2"

NOTES:

1. THIS TRASH RACK MAY BE USED WITH PIPE INLET STRUCTURES.
2. MATERIAL TO CONFORM TO ASTM DESIGNATION A-36.
3. 'S' MAY VARY WITH 'B' SEE PLATE.
4. ALL FILLET WELDS TO BE 3/16"
5. 2 HINGES REQUIRED FOR 33,36 & 42 INCH PIPES.
   3 HINGES REQUIRED FOR 48, 54 & 60

APPROVED BY:

BRIAN J. FRAGIAO
DIRECTOR OF PUBLIC WORKS/TOWN ENGINEER

REVISED:

TOWN OF LOOMIS

TRASH RACK (33" PIPE & LARGER)

DEPARTMENT OF PUBLIC WORKS

SD-14

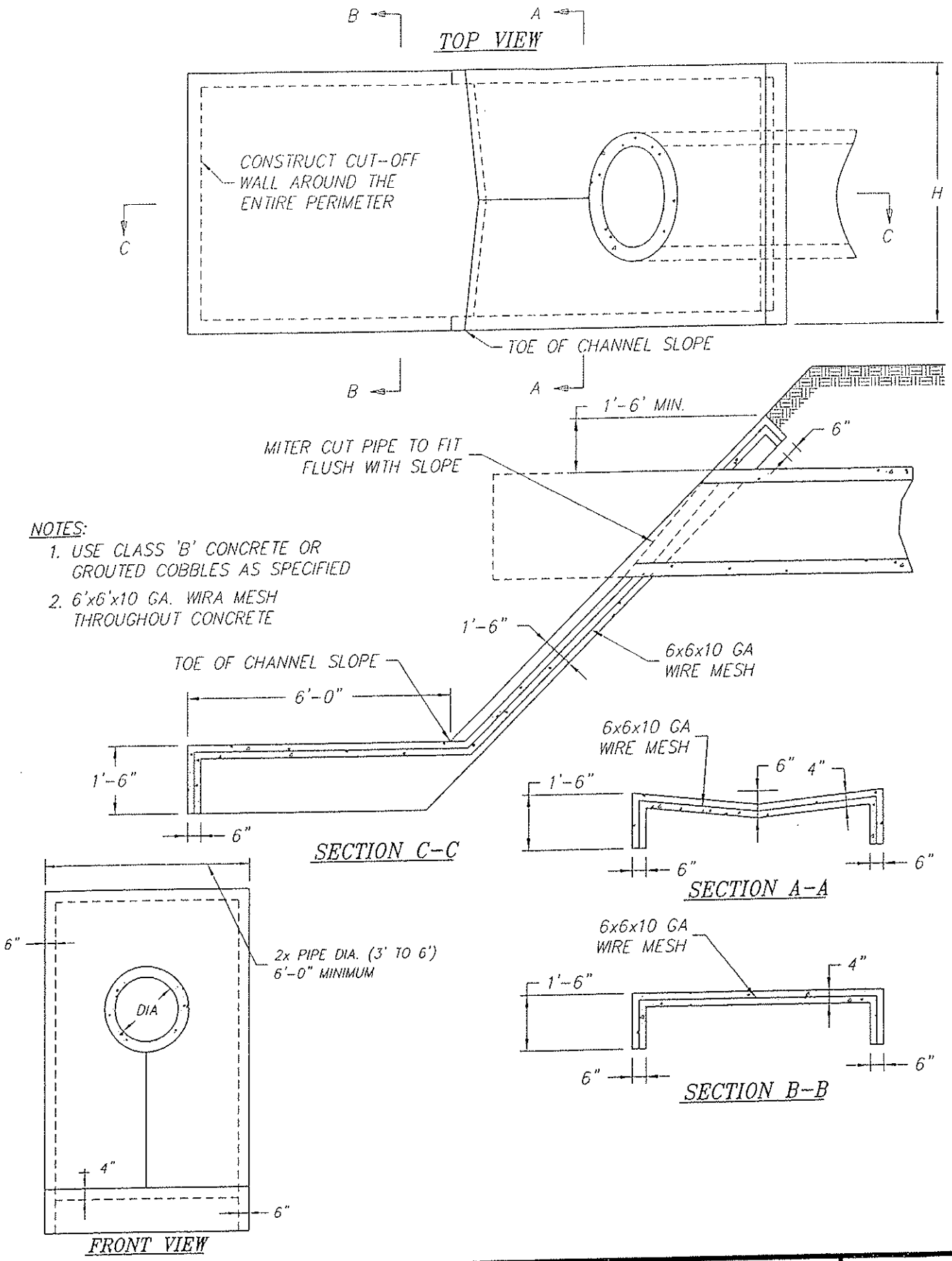

APPROVED BY:

BRIAN J. FRAGIAO
DIRECTOR OF PUBLIC WORKS/TOWN ENGINEER

REVISED:

TOWN OF LOOMIS

EROSION CONTROL PIPE DISCHARGE

DEPARTMENT OF PUBLIC WORKS

SD-15

Date: 1/22/03 Dwg. Name: sd-15.dwg

TOP VIEW

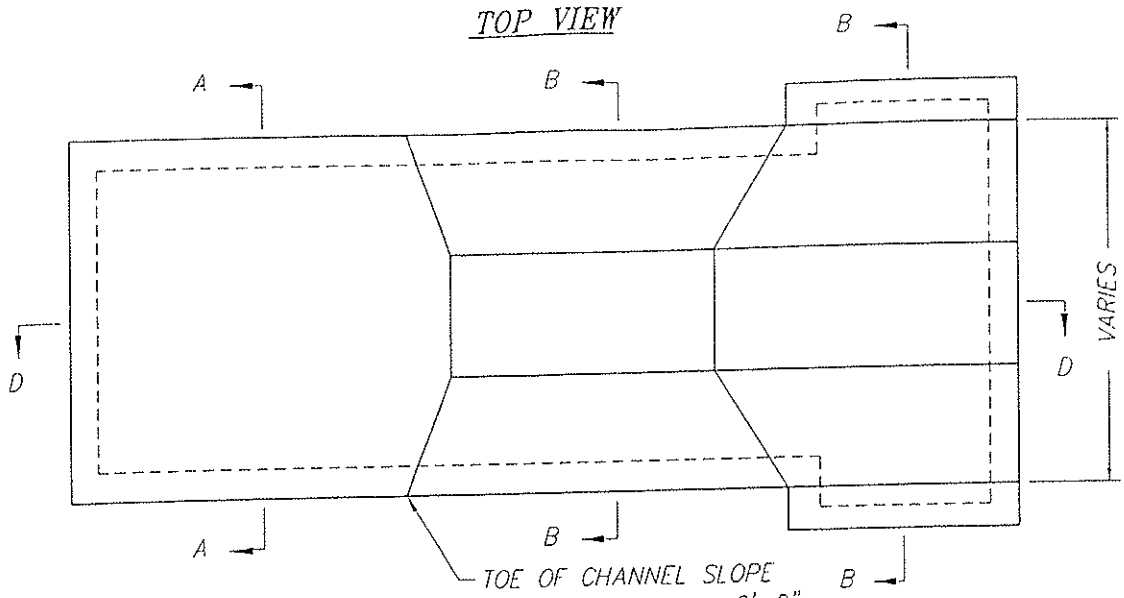

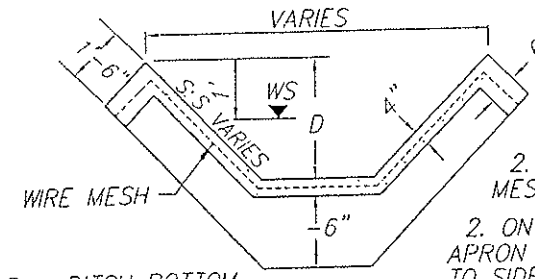

B = DITCH BOTTOM WIDTH OR AS SHOWN ON PLANS

SECTION C-C

NOTES:

1. USE CLASS 'B' CONCRETE OR GROUTED COBBLES AS SPECIFIED.
2. 6 X 6 X 10 GA WIRE MESH THROUGHOUT CONC.
2. ON LINED CHANNELS, APRON SHALL CONNECT TO SIDE LINING.

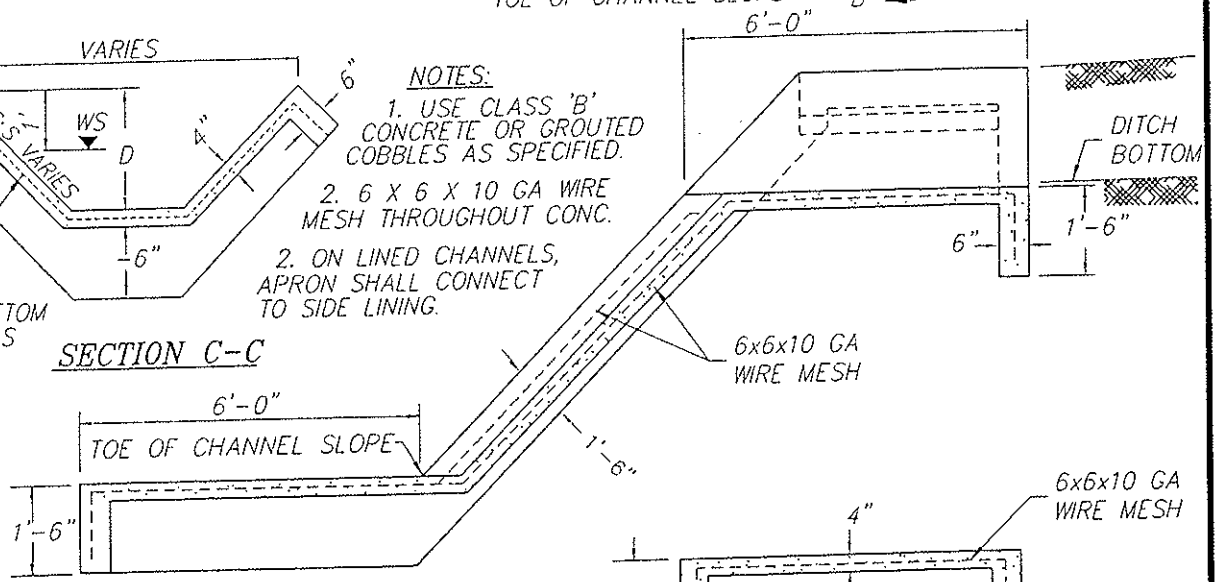

SECTION D-D

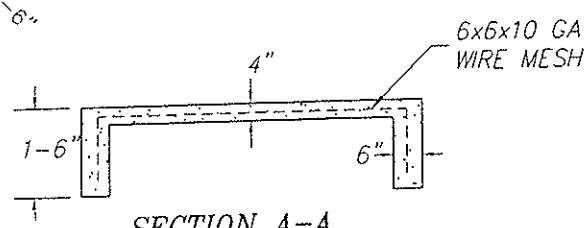

SECTION A-A

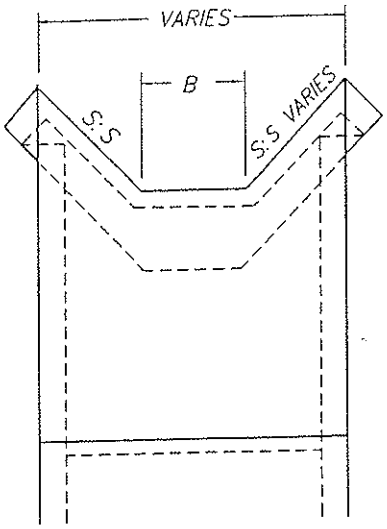

FRONT VIEW

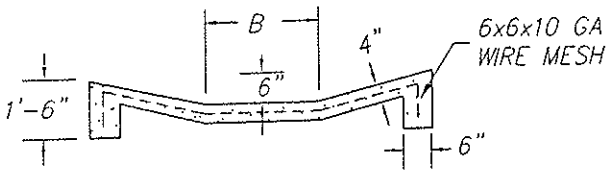

SECTION B-B

APPROVED BY: BRIAN J. FRAGIAO DIRECTOR OF PUBLIC WORKS/TOWN ENGINEER REVISED:		TOWN OF LOOMIS **EROSION CONTROL - DITCH DISCHARGE** DEPARTMENT OF PUBLIC WORKS	**SD-16**

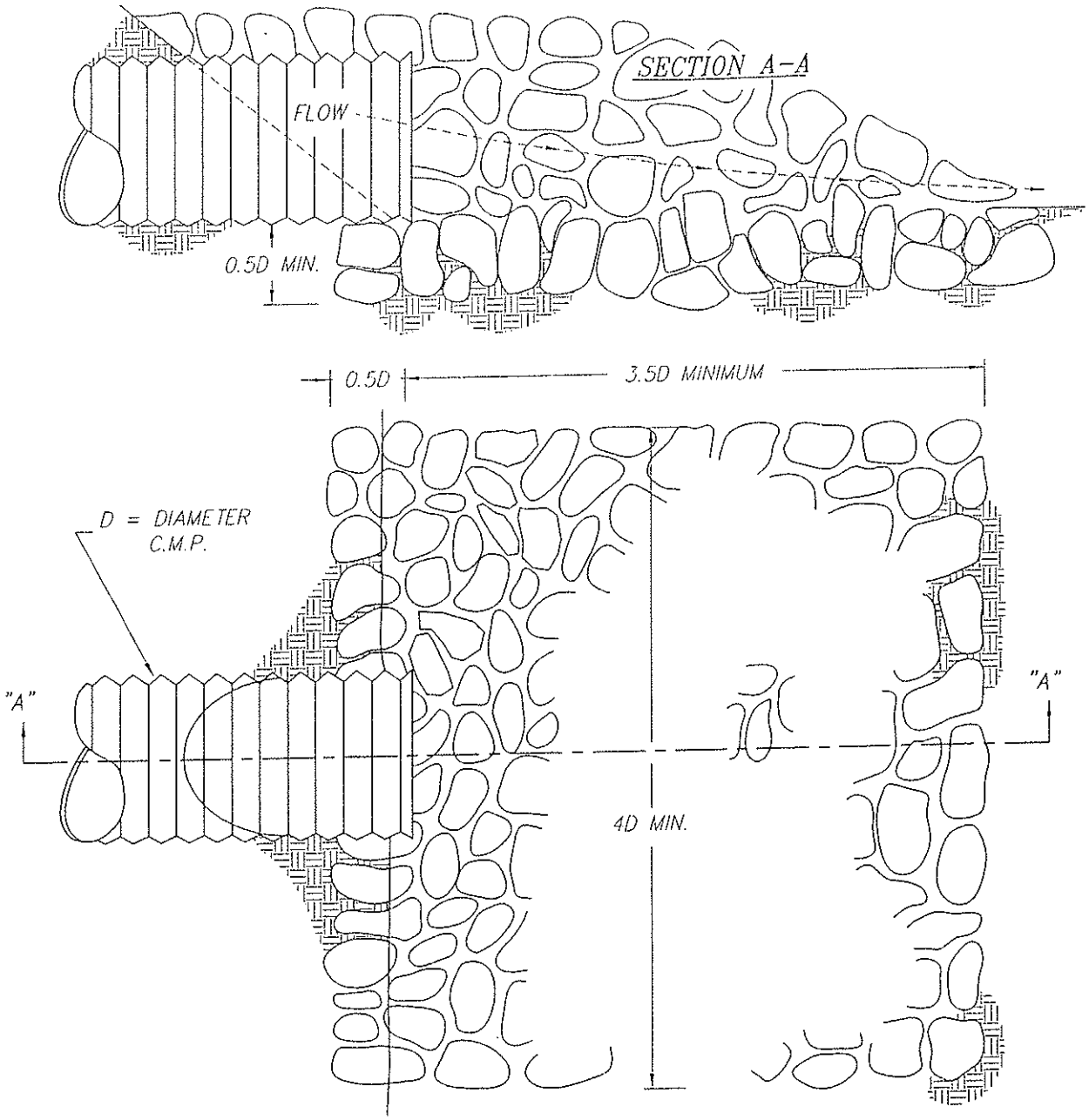

NOTE: 50% OF ROCK SHALL BE LARGER THAN 0.5D AND SHALL CONFORM TO SECTION 72 OF THE GENERAL SPECIFICATIONS OR REFER TO CHART D AND TABLE 2 OF "BANK AND SHORE PROTECTION IN THE CALIFORNIA HIGHWAY PRACTICE PAGES 112 AND 113.

APPROVED BY: BRIAN J. FRAGIAO DIRECTOR OF PUBLIC WORKS/TOWN ENGINEER REVISED:		TOWN OF LOOMIS CULVERT OUTFALL DEPARTMENT OF PUBLIC WORKS	SD-17

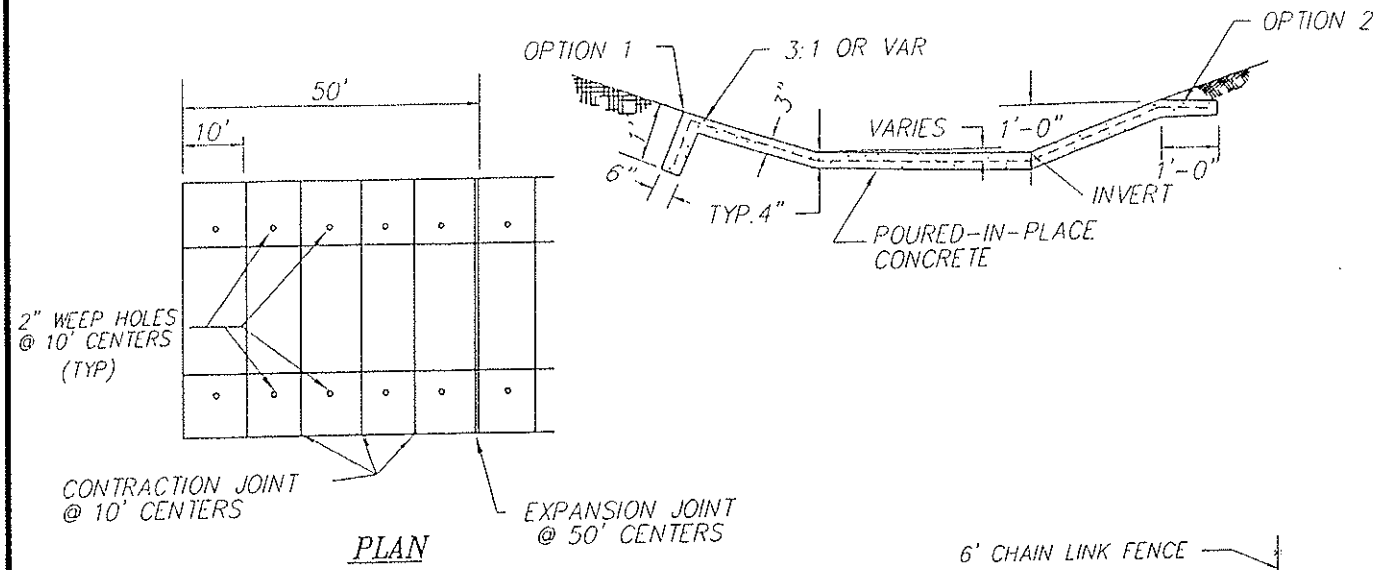

PLAN

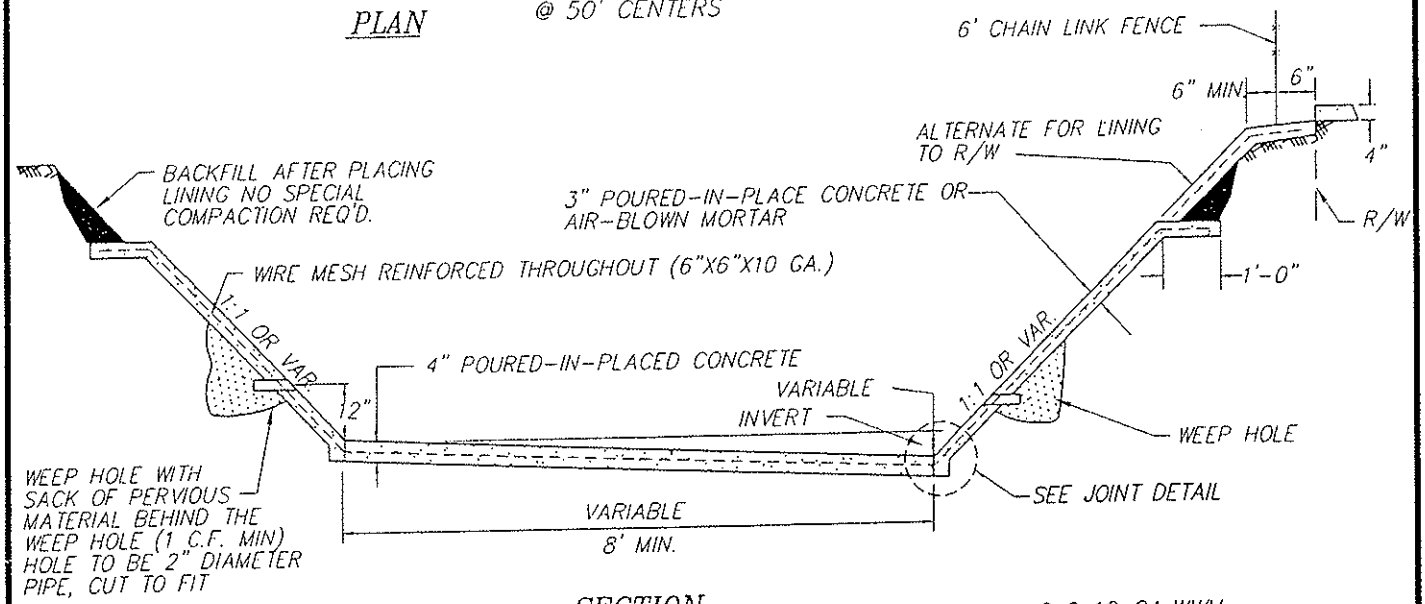

SECTION

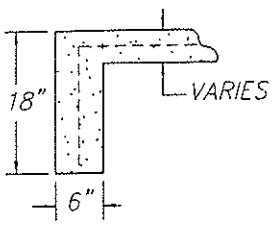

CUTOFF WALL

TO BE PLACED ALONG ENTIRE END OF LINED SECTION AT BEGINNING AND AT END OF LINING

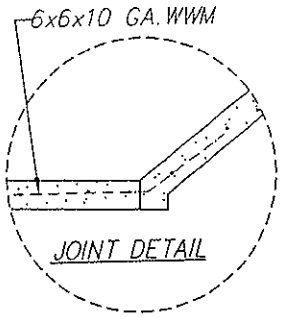

JOINT DETAIL

APPROVED BY: BRIAN J. FRAGIAO DIRECTOR OF PUBLIC WORKS/TOWN ENGINEER REVISED:		TOWN OF LOOMIS **LINED CHANNEL SECTION** DEPARTMENT OF PUBLIC WORKS	**SD-18**

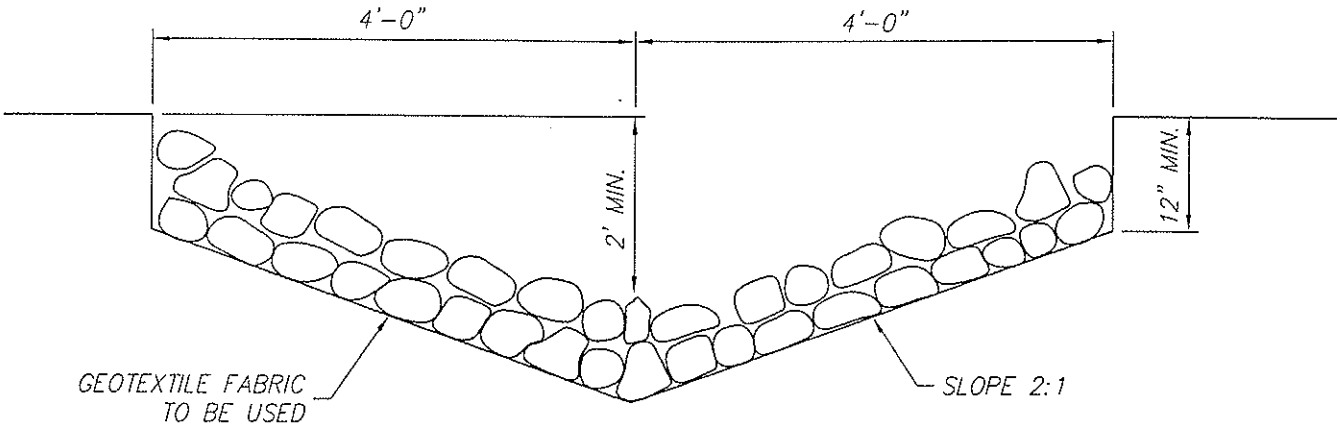

COBBLE LINED - "V" DITCH

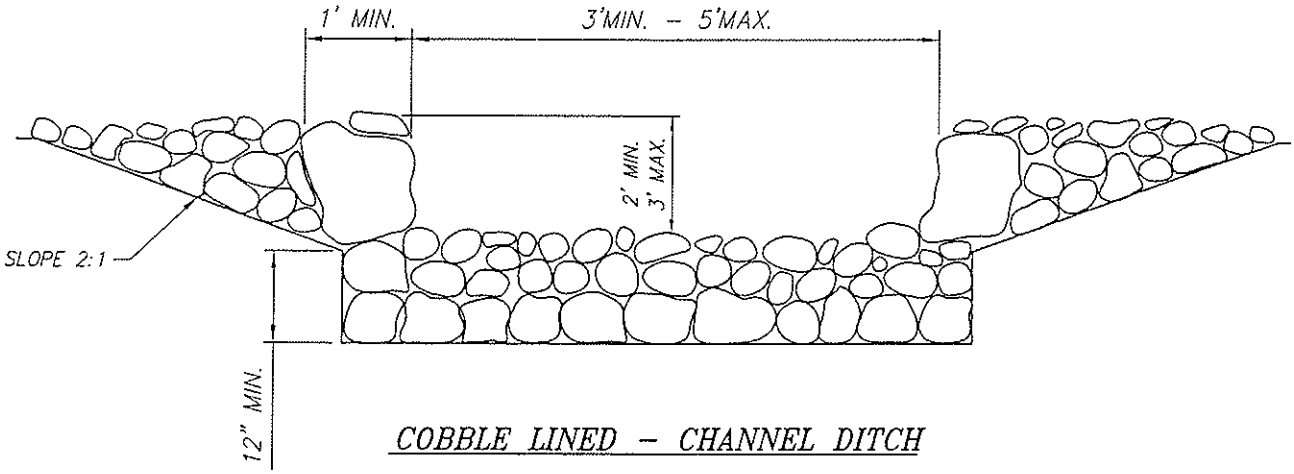

COBBLE LINED - CHANNEL DITCH

NOTE: 6" MIN. COBBLE SIZE

APPROVED BY: BRIAN J. FRAGIAO DIRECTOR OF PUBLIC WORKS/TOWN ENGINEER REVISED:		TOWN OF LOOMIS **ROCK LINED CHANNEL SECTIONS** DEPARTMENT OF PUBLIC WORKS	**SD-19**

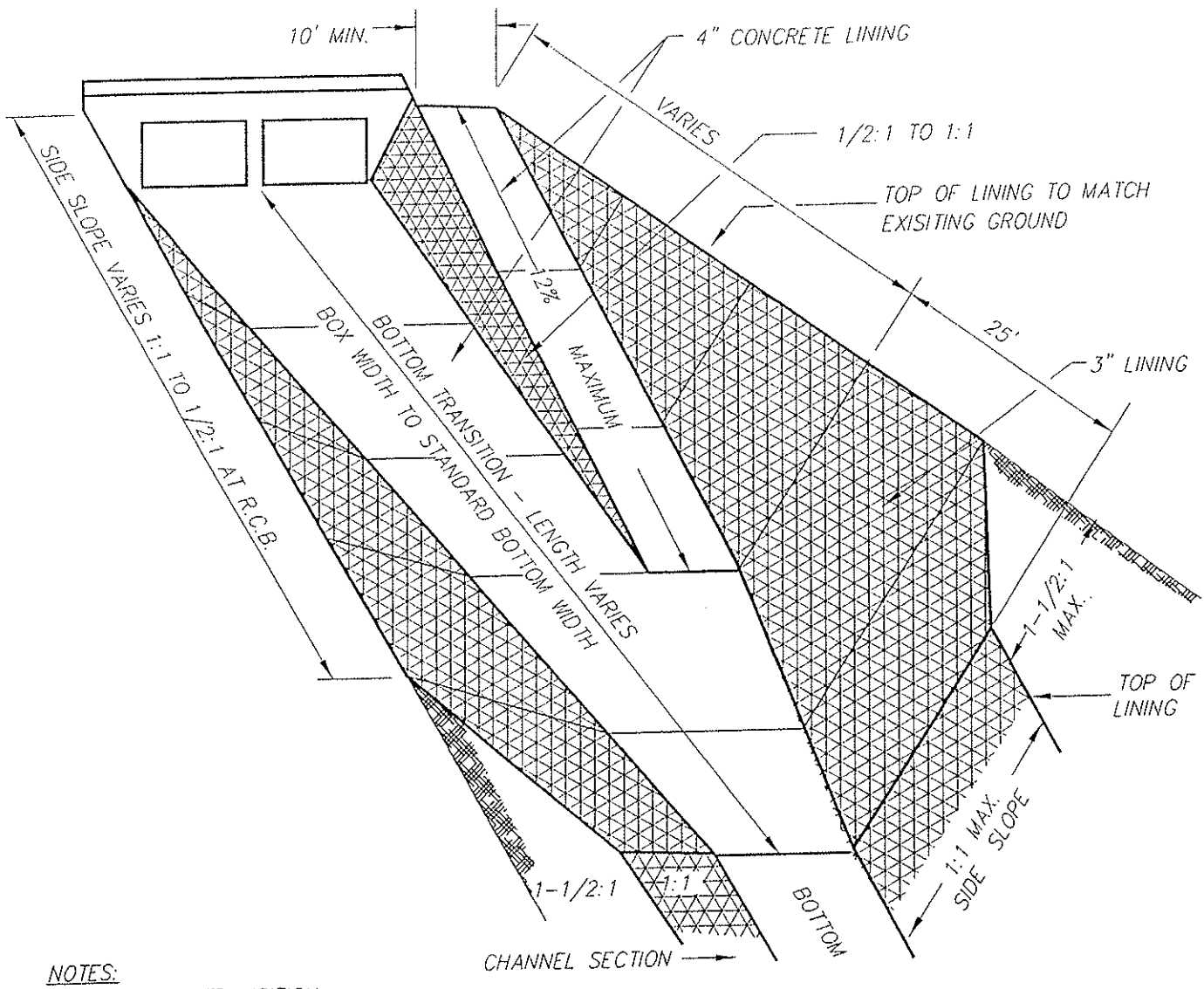

NOTES:

1. BOTTOM TRANSITION 25' MINIMUM LENGTH WITH NO RAMP.
2. WEEP HOLES AND JOINTS AS REQUIRED FOR ALL LINED CHANNEL SECTIONS.
3. LOW SIDE OF CHANNEL TO BE OPPOSITE RAMP.
4. SIDE SLOPE LINING MAY BE DELETED ON CHANNELS WITH BOTTOM LINING ONLY

APPROVED BY: BRIAN J. FRAGIAO DIRECTOR OF PUBLIC WORKS/TOWN ENGINEER REVISED:		TOWN OF LOOMIS ACCESS RAMP DETAIL DEPARTMENT OF PUBLIC WORKS	SD-20

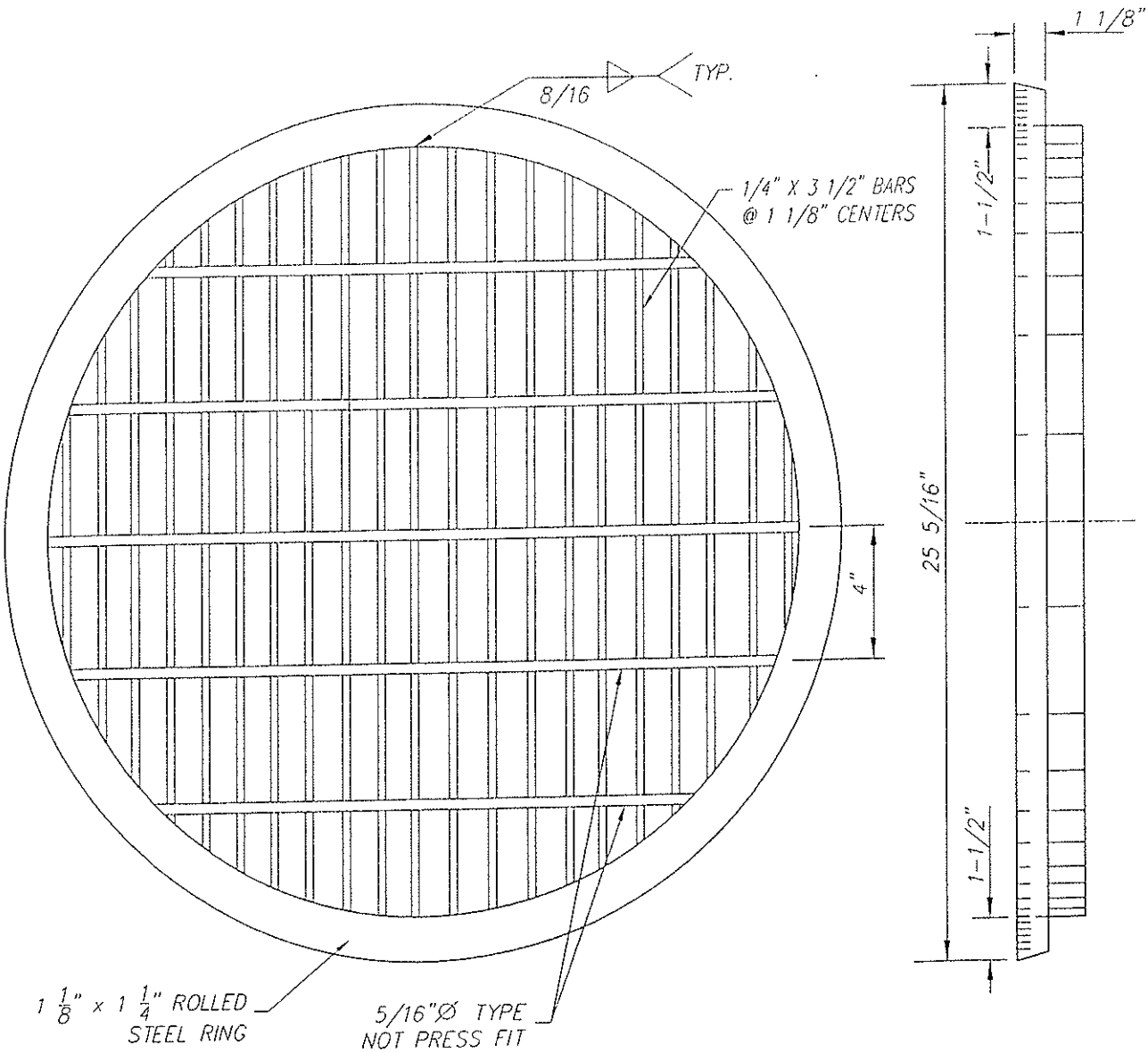

NOTES:

1. MANHOLE COVER SHALL FIT FRAME SHOWN ON DRAWING SD-22.
2. SEATING SURFACES SHALL BE MACHINED AS SHOWN IN DETAIL ON DRAWING SD-22.
3. THIS COVER MAY BE USED ONLY WITH APPROVAL OF ENGINEER
4. GALVANIZE AFTER FABRICATION.

APPROVED BY: BRIAN J. FRAGIAO DIRECTOR OF PUBLIC WORKS/TOWN ENGINEER REVISED:		TOWN OF LOOMIS GRATE TYPE MANHOLE COVER DEPARTMENT OF PUBLIC WORKS	SD-21

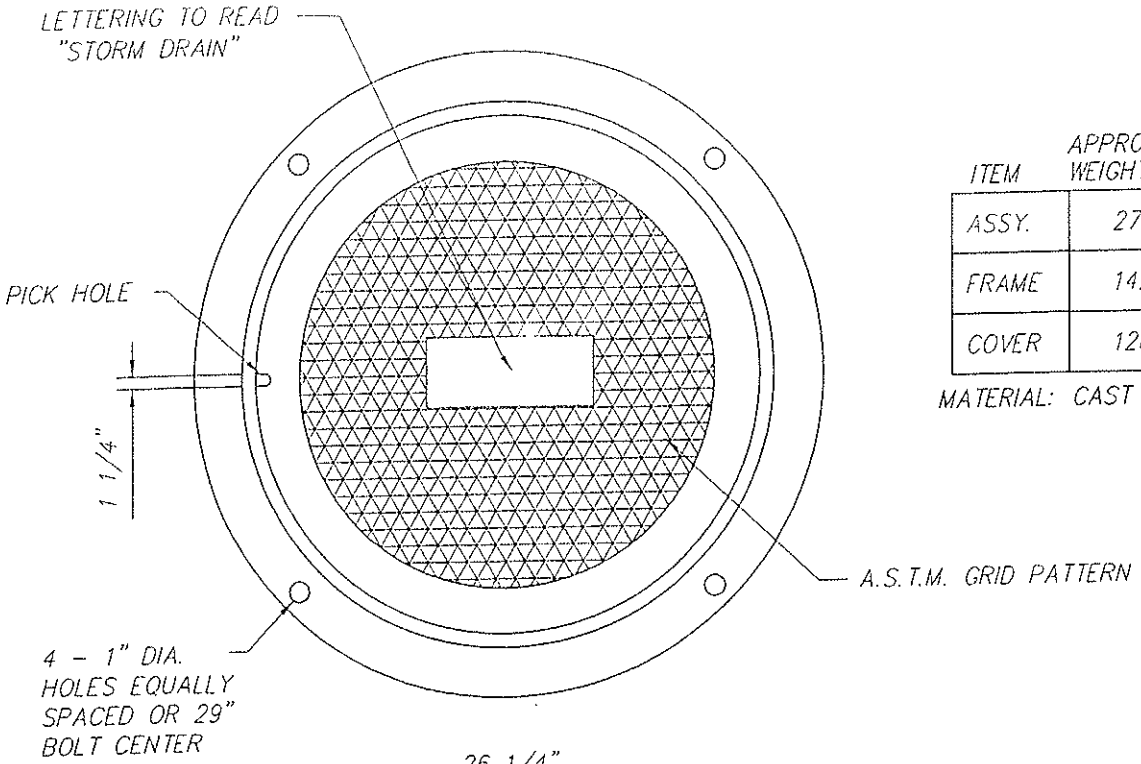

ITEM	APPROXIMATE WEIGHT (LBS.)
ASSY.	270
FRAME	142
COVER	128

MATERIAL: CAST IRON

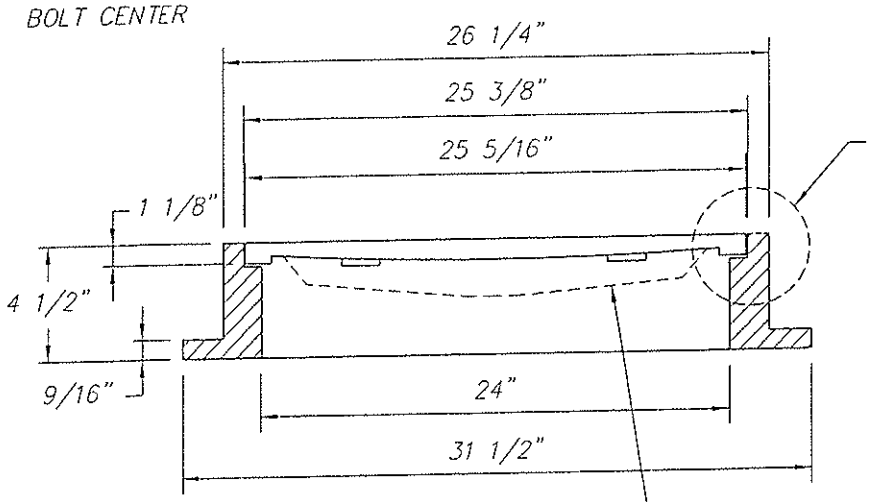

NOTE: ALL MATERIALS TO BE MADE IN U.S.A.

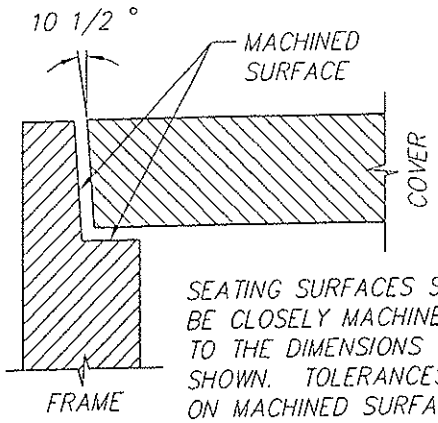

SEATING SURFACES SHALL BE CLOSELY MACHINED TO THE DIMENSIONS SHOWN. TOLERANCES ON MACHINED SURFACES SHALL NOT EXCEED 1/64"

DETAIL A

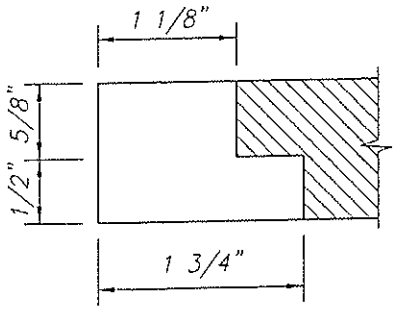

SECTION THROUGH CENTER OF PICK HOLE

APPROVED BY: BRIAN J. FRAGIAO DIRECTOR OF PUBLIC WORKS/TOWN ENGINEER REVISED:		TOWN OF LOOMIS STANDARD 24" MANHOLE FRAME & COVER DEPARTMENT OF PUBLIC WORKS	SD-22

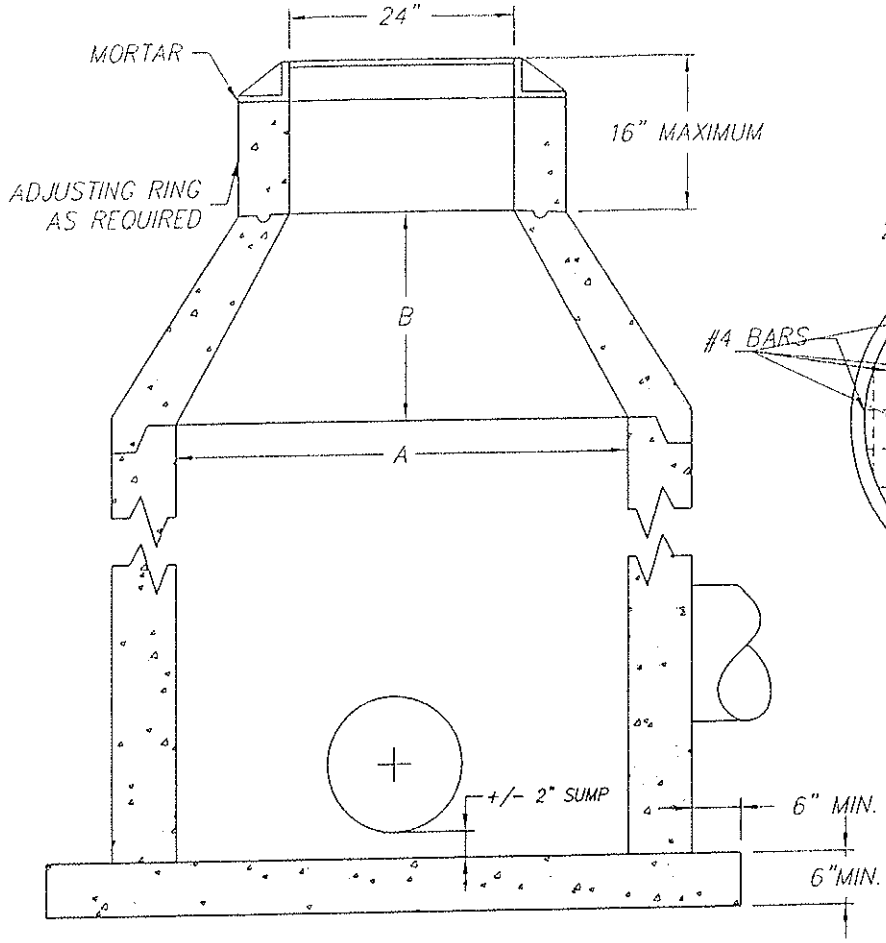

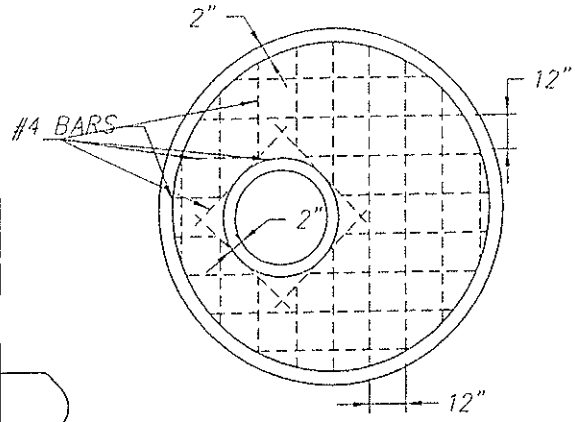

FLAT SLAB TOP

SUMP SHALL BE 2" DEEP (TYP.), MEASURED FROM FROM INVERT OF OUTFALL PIPE. SUMP NOT REQUIRED IF DIAMETER OF OUTFALL PIPE IS 24" OR LARGER, OR IF M.H. IS NOT WITHIN PUBLIC R/W OR OTHER AREA WITH VEHICULAR ACCESS. A 12" DEEP SUMP WILL BE REQUIRED IN ALL MANHOLES DISHARGING DIRECTLY TO WATERWAYS OR OPEN SPACES.

NOTES:

1. ECCENTRIC CONES SHALL BE USED IF SHOWN ON THE PLANS.
2. JOINTS MAY BE EITHER KEYED OR TONGUE AND GROOVE.
3. A MINIMUM OF 6" OF UNDISTURBED MANHOLE WALL SHALL REMAIN BETWEEN ENTERING PIPES

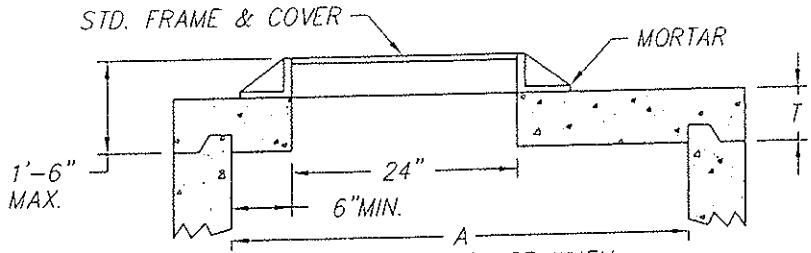

FLAT SLAB SHALL BE USE WHEN DEPTH DOES NOT PERMIT USE OF TAPER UNIT

TABLE OF DIMENSIONS

M.H.	A	B	T MIN
48"	48"	16"	6"
60"	60"	30"	8"
72"	72"	42"	8"

DIMENSION "B" IS A MINIMUM DIMENSION AND MAY BE GREATER IF DEPTH PERMITS.

RISER SECTIONS, CONES, AND ADJUSTING RINGS SHALL CONFORM TO ASTM DESIGNATION C-478

FRAME SHALL BE SECURED TO RISER OR FLAT SLAB TOP WITH CEMENT MORTAR

CLASS A CONCRETE

APPROVED BY:

BRIAN J. FRAGIAO
DIRECTOR OF PUBLIC WORKS/TOWN ENGINEER

REVISED:

TOWN OF LOOMIS

STANDARD PRECAST STORM MANHOLE

DEPARTMENT OF PUBLIC WORKS

SD-23

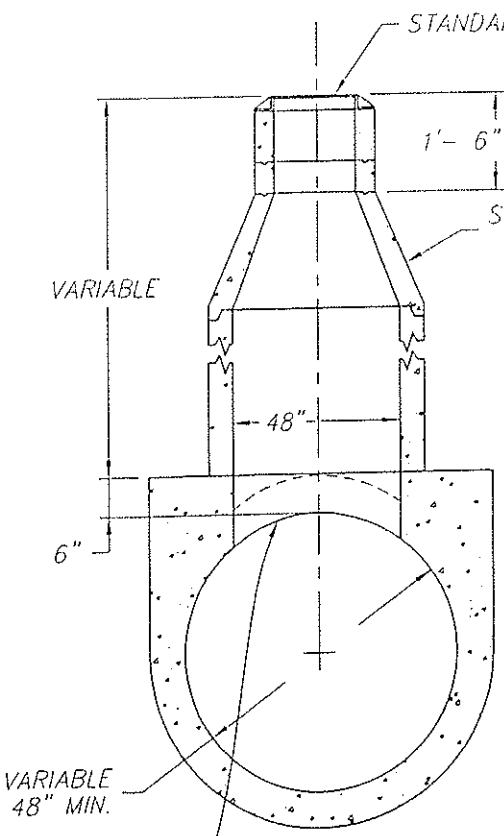

TYPE A

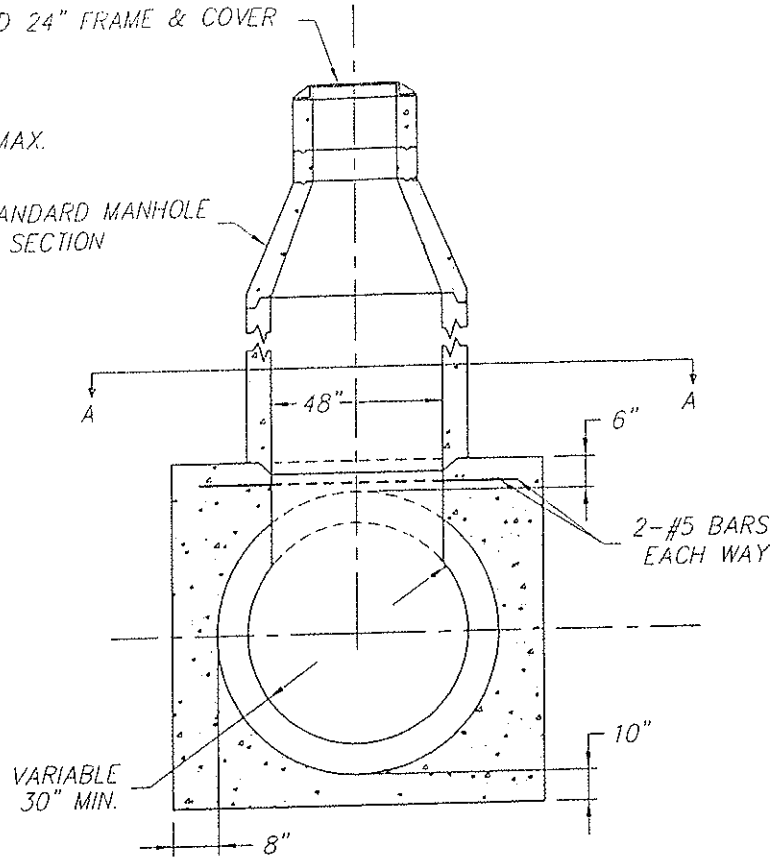

TYPE B

NOTE:
REMOVE CONCRETE IN MANHOLE OPENING AND CONSTRUCT RISER BASE, WHILE CONCRETE IS STILL FRESH.

PLACE RISER SECTION AFTER CONCRETE HAS SET. (CLASS A CONCRETE).

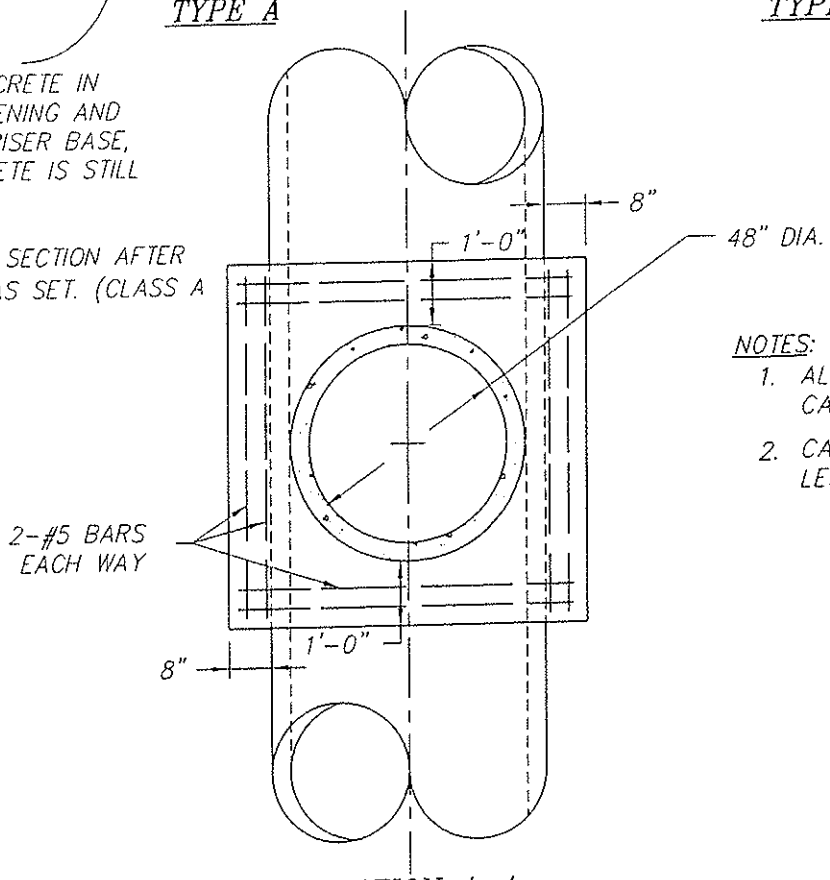

SECTION A-A

NOTES:
1. ALL PIPE OTHER THAN CAST-IN-PLACE PIPE.
2. CAST-IN-PLACE PIPE LESS THAN 48" DIA.

APPROVED BY: BRIAN J. FRAGIAO DIRECTOR OF PUBLIC WORKS/TOWN ENGINEER REVISED:		TOWN OF LOOMIS **TYPE "A" & "B" SADDLE MANHOLE** DEPARTMENT OF PUBLIC WORKS	SD-24

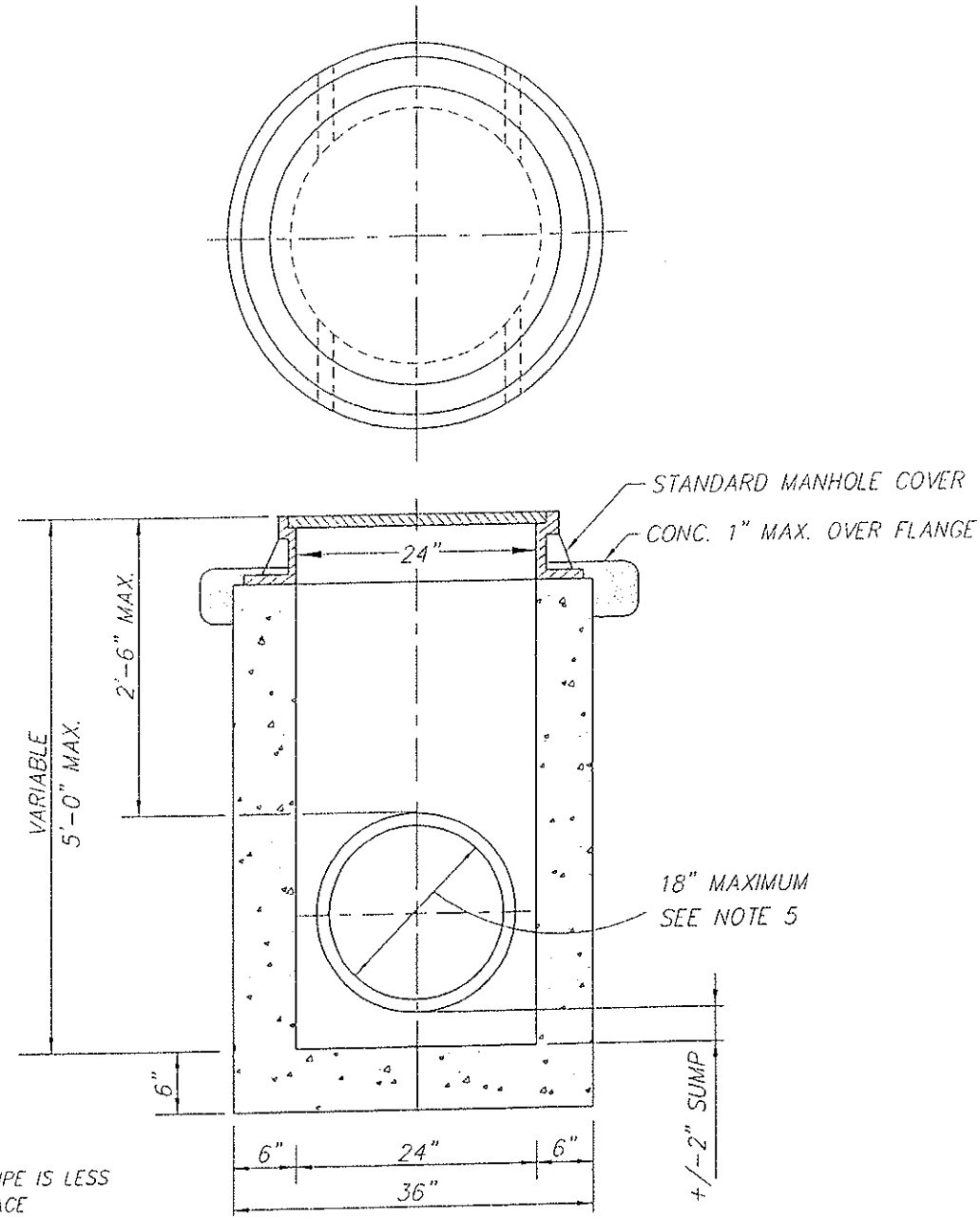

NOTES:

1. USED WHERE TOP OF PIPE IS LESS THAN 30" BELOW SURFACE
2. WALL THICKNESS OF MANHOLE DOES NOT APPLY WHEN CLASS II R.C.P. IS USED.
3. USED CLASS "A" CONCRETE OR CLASS II R.C.P.
4. WHEN MANHOLE IS CAST-IN-PLACE, WALL THICKNESS SHALL NOT VARY MORE THA 1 INCH FROM THAT SHOWN
5. WHEN USED AT ANGLE POINTS, MAX. PIPE SIZE TO BE 12 INCHES.
6. 2" SUMP TO BE MEASURED FROM INVERT OF OUTFALL PIPE.
7. SUMP NOT REQUIRED WHEN MANHOLE LOCATED IN AREA WITHOUT VEHICULAR ACCESS.
8. ALL MANHOLE COVERS TO BE MADE IN U.S.A.

APPROVED BY: BRIAN J. FRAGIAO DIRECTOR OF PUBLIC WORKS/TOWN ENGINEER REVISED:		TOWN OF LOOMIS **24" STORM MANHOLE** DEPARTMENT OF PUBLIC WORKS	SD-25

MAXIMUM TRENCH DEPTH
MEASURED SURFACE TO BOTTOM OF TRENCH INFEET

DIAMETER	C-14 CONC. PIPE -CLASS-			REINFORCED CONCRETE PIPE -CLASS-					CAST IN PLACE
	1	2	3	I	II	III	IV	V	
10	12	17	29	NOT PERMITTED				NO LIMIT	NO LIMIT
12	12	17	21		8	12	30		
15	12	17	20		10	15	35		
18	11	17	19		11	16	38		
21	11	17	19		12	17	39		
24	11	16	19		12	18	39		
27	11	16	18		13	19	39		
30	11	15	17		14	19	38		
33	11	15	16		14	20	38		
36	10	13	14		13	17	27	69	
42	NOT PERMITTED				14	18	29	62	
48					15	19	30	60	
54					16	20	31	58	
60				14	16	21	31	57	45
66				15	17	22	32	56	35
72				15	18	23	33	56	30

NOTES:

1. ALL DEPTHS SHOWN FOR FLEXIBLE PAVEMENT AND TRENCH WIDTH EQUAL TO O.D. OF PIPE PLUS 16" FOR PIPE 33" AND SMALLER IN INSIDE DIAMETER. TRENCH WIDTH EQUALS O.D. OF PIPE PLUS 24" FOR PIPE 36" AND LARGER IN INSIDE DIAMETER. TRENCH WIDTH MEASURED AT TOP OF PIPE.
2. THIS DETAIL SHALL BE A GUIDE ONLY. THE CITY REQUIRES THAT A NCPI LOAD CALCULATION BE RUN ON ALL PIPES FOR TRENCH LOAD DESIGN.

MINIMUM TRENCH DEPTH
MEASURED SURFACE TO TOP OF PIPE IN INCHES

TYPE	CLASS	MIN. COVER	
		STREET	OFF ST.
C-14 CONC. PIPE	1	30	12
	2	27	12
	3	24	12
REIN. CONCRETE PIPE	I	27	12
	II	24	12
	III	18	12
	IV	12	12
	V	12	12
CAST IN PLACE CONCRETE PIPE	—	12	12

APPROVED BY:

BRIAN J. FRAGIAO
DIRECTOR OF PUBLIC WORKS/TOWN ENGINEER

REVISED:

TOWN OF LOOMIS

PIPE COVER REQUIREMENTS-CP, RCP, ACP & CAST-IN-PLACE

DEPARTMENT OF PUBLIC WORKS

SD-26

MAXIMUM TRENCH DEPTH
MEASURED SURFACE TO BOTTOM OF TRENCH IN FEET

THICKNESS IN INCHES / DIA IN INCHES	CORRUGATED STEEL PIPE (C.S.P.)**					CORRUGATED ALUMINUM PIPE (C.A.P.)*				
	0.064	0.079	0.109	0.138	0.168	0.060	0.075	0.105	0.135	0.165
10						40				
12	100					35	40	50		
15	100					32	35	40		
18	100					26	30	35		
21	91	100				21	25	30		
24	80	100				13	21	30		
27	64	80				13	20	27		
30	64	80	100			12	19	25	30	
33	53	66	93				16	20	27	
36	53	66	93	100			15	18	25	30
42	46	57	80	100			13	15	20	29
48	40 48	50 70	70 66	90	100			15	18	27
54	43	44 62	62 75	80	98			13	15	25
60	39	49	56 69	72	88				10	20
66	36	44	51 62	64	78				10	18
72	32	41	56	55	68					15

NOT PERMITTED

MAXIMUM TRENCH DEPTH
MEASURED SURFACE TO TOP OF PIPE IN INCHES

(C.S.P.)		(C.A.P.)*
50' TO 60' R/W STREETS	MAJOR STREETS	OFF STREET ONLY
6	9	9
—	—	—
—	—	9
—	—	10
—	—	10
—	9	12
6	10	15
5	12	18
5	14	20
5	16	24

NOTES:

1. **–NORMAL PIPE CORRUGATION PROFILE IS 2 2/3"x1" THE CORRUGATION OF THE PIPES WITHIN THE SHADED AREA SHALL HAVE PROFILE OF 3" x 1"
2. *–ALUMINUM PIPE IS NOT PERMITTED IN PUBLIC STREET RIGHT OF WAY.
3. WHEN FLOW VELOCITY EXCEEDS FIVE (5) F.P.S. THICKER METAL SHALL BE PROVIDED.

APPROVED BY:

BRIAN J. FRAGIAO
DIRECTOR OF PUBLIC WORKS/TOWN ENGINEER

REVISED:

TOWN OF LOOMIS

PIPE COVER REQUIREMENT-CSP&CAP

DEPARTMENT OF PUBLIC WORKS

SD–27

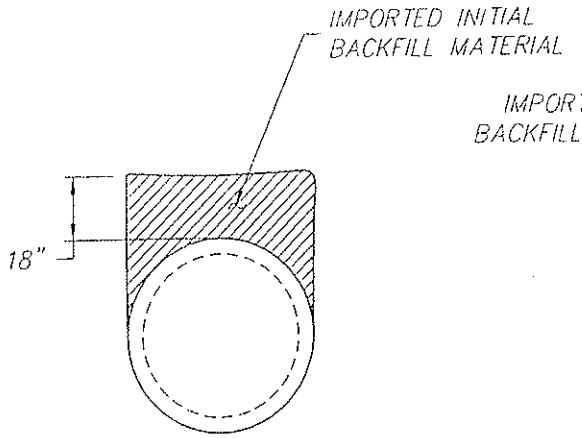

CAST-IN-PLACE
CONCRETE PIPE

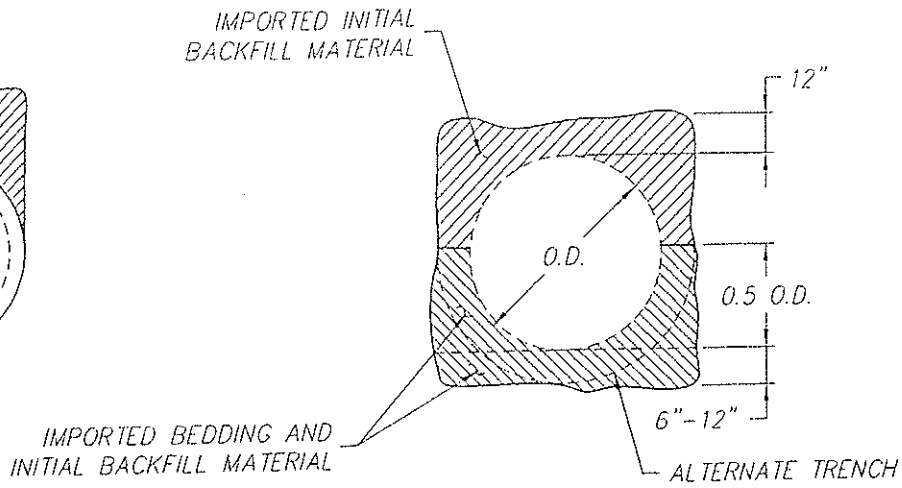

PIPES 24" OR GREATER
IN DIAMETER

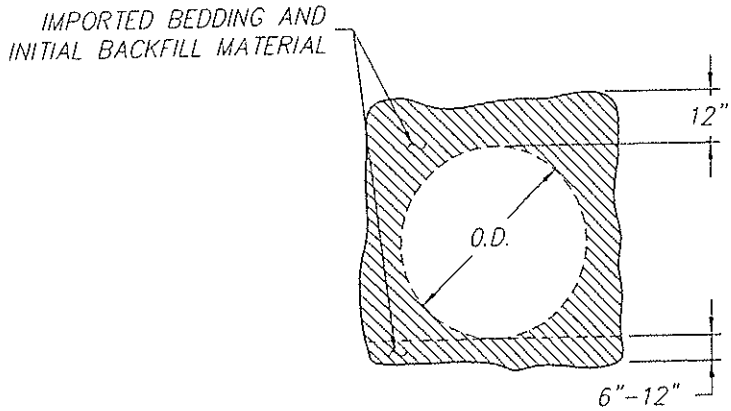

PIPES LESS THAN 24"
IN DIAMETER

NOTES:

1. CAST-IN-PLACE CONCRETE PIPE REQ'S APPROVAL OF TOWN ENGINEER. AND DETAILED SOILS REPORT.
2. INITIAL BEDDING AND BACKFILL MATERIAL SHALL CONFORM TO WATER AND SEWER TRENCH DETAIL.
3. BEDDING AND INITIAL BACKFILL TO CONFORM TO MANUFACTURER'S SPECIFICATION.
4. GEOTEXTILE WRAP MAY BE REQUIRED BY SOILS ENGINEER OR TOWN ENGINEER DUE TO SOILS CONDITION.

APPROVED BY: BRIAN J. FRAGIAO DIRECTOR OF PUBLIC WORKS/TOWN ENGINEER REVISED:		TOWN OF LOOMIS PIPE BEDDING & INITIAL BACKFILL DEPARTMENT OF PUBLIC WORKS	SD-28

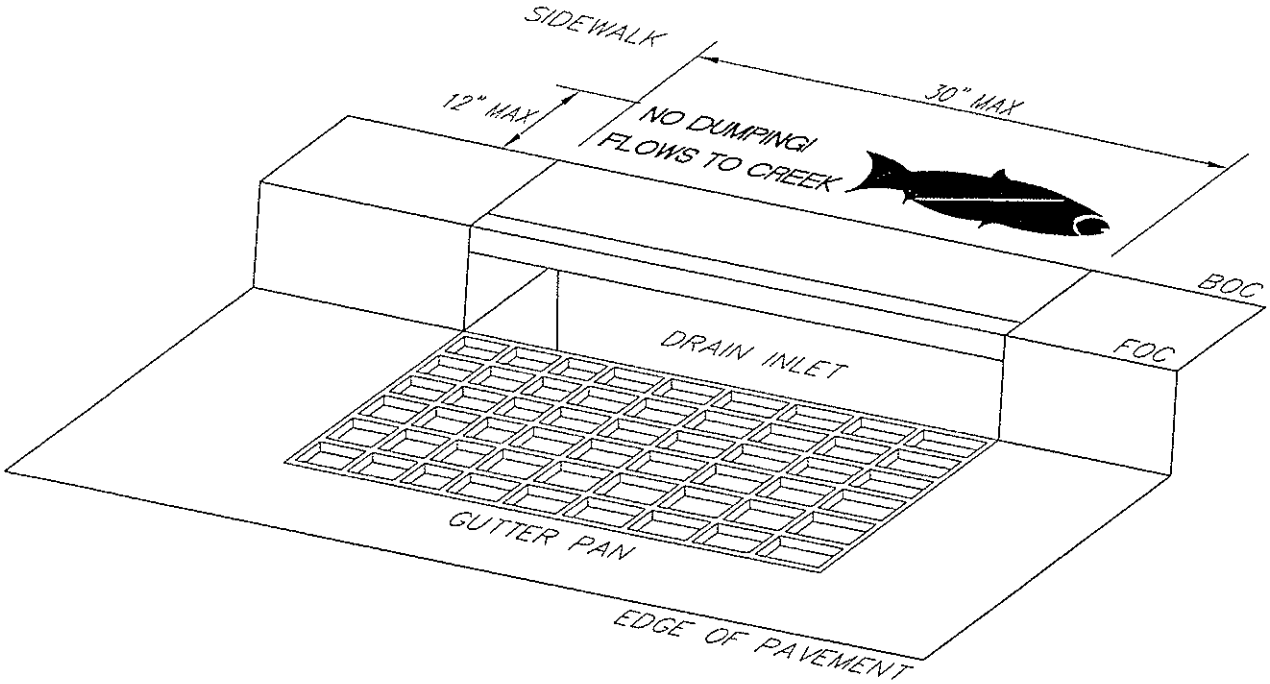

NOTES:

1. LETTERING SHALL BE 1 1/4 TO 1 1/2 INCHES HIGH. THE MESSAGE AND SYMBOL SHALL BE DEPRESSED 1/8 TO 1/4 INCH INTO THE CONCRETE. THE FISH SYMBOL SHALL BE A MINIMUM OF 11 INCHES LONG AND 3 1/2 INCHES HIGH.

2. THE STAMP SHALL BE APPROVED BY THE PUBLIC WORKS INSPECTOR PRIOR TO ITS USE.

3. THIS DETAIL SHALL APPLY TO ALL DRAIN INLET DESIGNS. WHERE THE SIDEWALK DOES NOT ADJOIN THE BACK OF CURB, THE NOTICE SHALL BE STAMPED IN THE CONCRETE BACKUP, BEHIND THE DRAIN INLET. WHERE THE DRAIN INLET IS PLACED IN A "V" GUTTER WITHOUT A CURB INLET, THE NOTICE SHALL BE STAMPED ON ONE SIDE OR THE OTHER, PARRALLEL TO THE LENGTH OF THE INLET.

4. THE MESSAGE SHALL BE FREE OF BLEMISHES, LEGIBLE AND ACCEPTABLE TO THE PUBLIC WORKS INSPECTOR.

APPROVED BY: BRIAN J. FRAGIAO DIRECTOR OF PUBLIC WORKS/TOWN ENGINEER REVISED:		TOWN OF LOOMIS **"NO DUMPING" PUBLIC NOTICE DETAIL** DEPARTMENT OF PUBLIC WORKS	**SD-29**

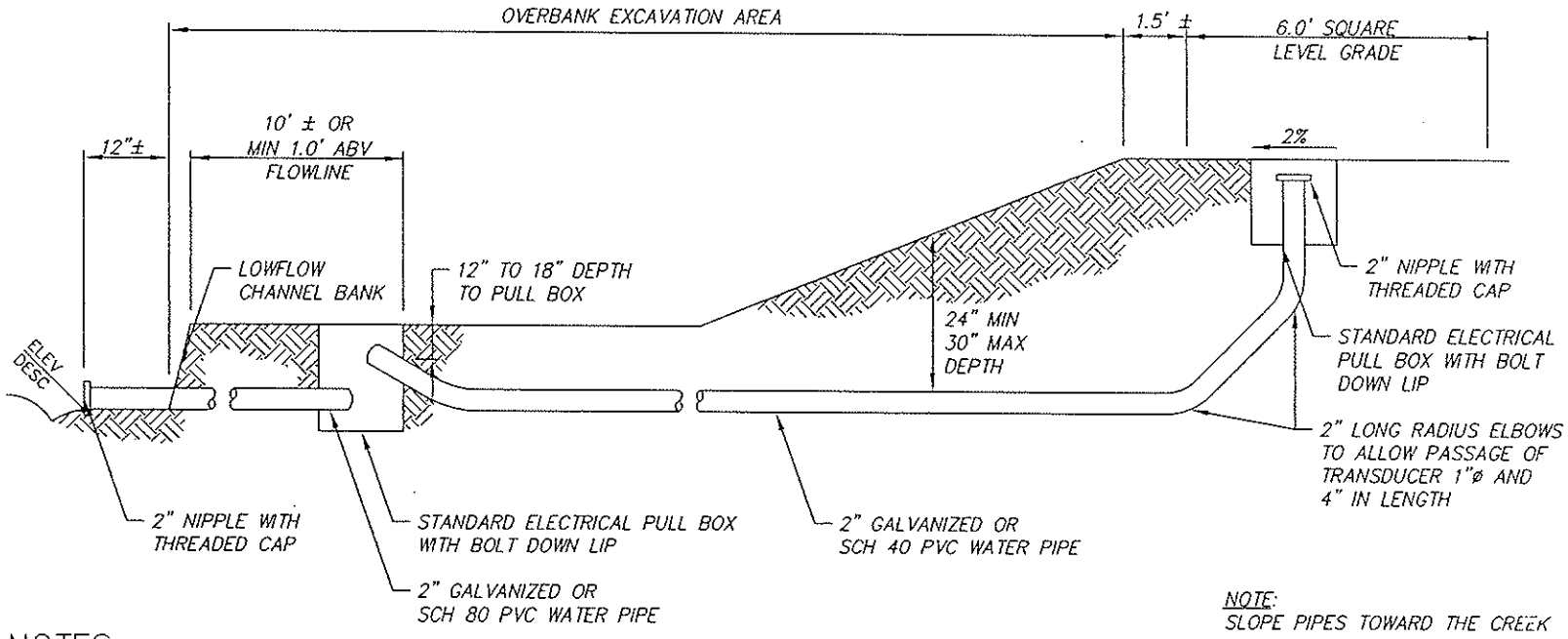

NOTE:
SLOPE PIPES TOWARD THE CREEK

NOTES:

1. EACH STREAM GAUGING CONDUIT WILL HAVE FOUR COMMON PRINCIPAL COMPONENTS, AN
   a) A PAD GRADE AREA 6.0 FEET SQUARE WITH 2% SLOPE TOWARD THE STREAM SIDE, ELECTRICAL PULL BOX WILL BE INSTALLED 12 INCHES OFF CENTER OF THE PAD TOWARD THE STREAM SIDE.
   b) TWO INCH ELECTRICAL PVC CONDUIT SCH 40 OR BETTER COMMENCING AT THE ELECTRICAL PULL BOX ON THE PAD AND TERMINATING IN AN ELECTRICAL PULL BOX 10 FEET ± FROM THE LOW FLOW CHANNEL BANK OF 1 FOOT ± ABOVE THE LOW FLOW. THE CONDUIT SHOULD INCLUDE ONLY LONG RADIUS ELBOWS TO DROP IT DOWN TO THE APPROPRIATE ELEVATION. THE LONG RADIUS ELBOW SHOULD EXTEND OUT BEYOND THE 6.0 FEET PAD AREA BOUNDARY, A PULL STRING SHALL BE BLOWN INTO THE CONDUIT FROM THE ELECTRICAL PULL BOX ON THE PAD AREA TO THE ELECTRICAL PULL BOX ADJACENT TO THE LOW FLOW CHANNEL.

2. STANDARD ELECTRICAL PULL BOXES 2 FOOT SQUARE WITH BOLT DOWN LIDS WILL BE USED.

3. LOCATION OF THIS STRUCTURE SHOULD BE ON THE UPSTREAM SIDE OF THE BRIDGE AND BE ACCESSIBLE BY FOOT AT ALL POINTS FROM LEVEL GRADE AREA TO THE TERMINATION AT THE LOW FLOW CHANNEL. TRUCK ACCESS IS NECESSARY TO THE 6.0 SQUARE FOOT PAD AREA BUT NOT TO OTHER POINTS ALONG THE CONDUIT. ALONG WITH THIS PHYSICAL ACCESS CONCOMITANT RIGHTS OF ACCESS AND/OR EASEMENTS WILL BE GRANTED BY PROPERTY OWNER TO ALLOW FOR MAINTENANCE OF ACCESS AND/OR EASEMENTS WILL BE GRANTED BY PROPERTY OWNER TO ALLOW FOR MAINTENANCE OF TOWN EQUIPMENT INSTALLED ON THIS SITE.

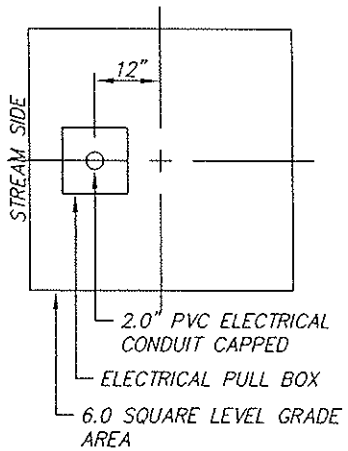

PULL BOX

APPROVED BY:
BRIAN J. FRAGIAO
DIRECTOR OF PUBLIC WORKS/TOWN ENGINEER
REVISED:

TOWN OF LOOMIS
STREAM GAUGING STATION
DEPARTMENT OF PUBLIC WORKS

SD-30