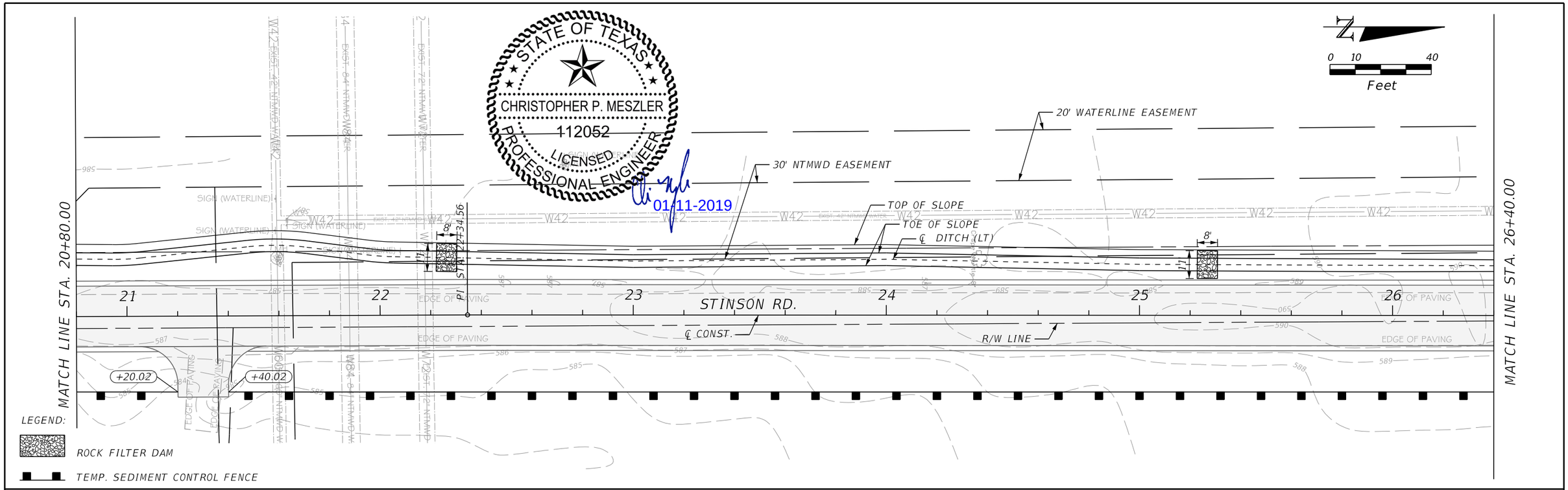

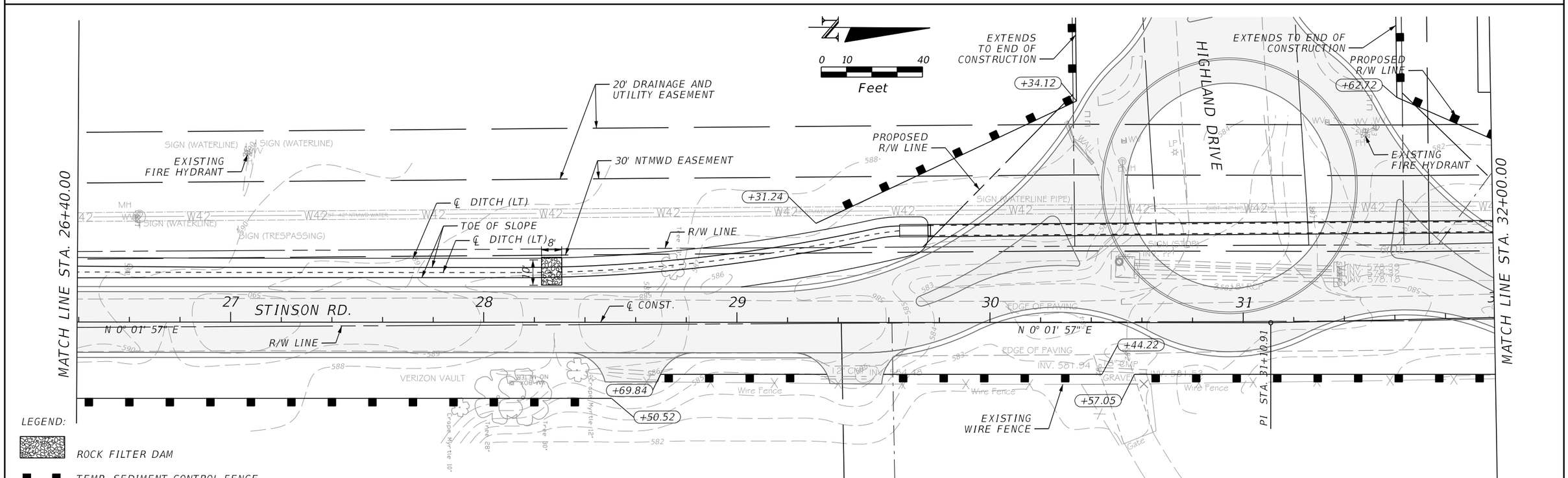

REVISIONS	
DATE	DESCRIPTION

LAKES ENGINEERING, INC.

CHRISTOPHER P. MESZLER, P.E.
LIC. No. 112052
1903 CENTRAL DRIVE, SUITE #405
BEDFORD, TX 76021
PHONE: 817.618.3640
TBPE REG. F-15243

STINSON ROAD IMPROVEMENTS
CITY OF LUCAS
PUBLIC WORKS DEPARTMENT
665 COUNTRY CLUB ROAD
LUCAS, TX. 75002

EROSION CONTROL PLAN

SHEET NO.
46

CALL BEFORE YOU DIG
TEXAS ONE CALL SYSTEM 1-800-DIG-TESS
48 HOURS NOTICE BEFORE YOU DIG, DRILL, OR BLAST - STOP CALL

PLOTTED BY: hrementeria
PLOT DATE: 1/11/2019
LAST SAVED: 12:19:40 PM
LOCATION: C:\Transfer\18-112 Stinson Road\18112 Stinson Plan Set\drainage\SWPPRD03.DGN

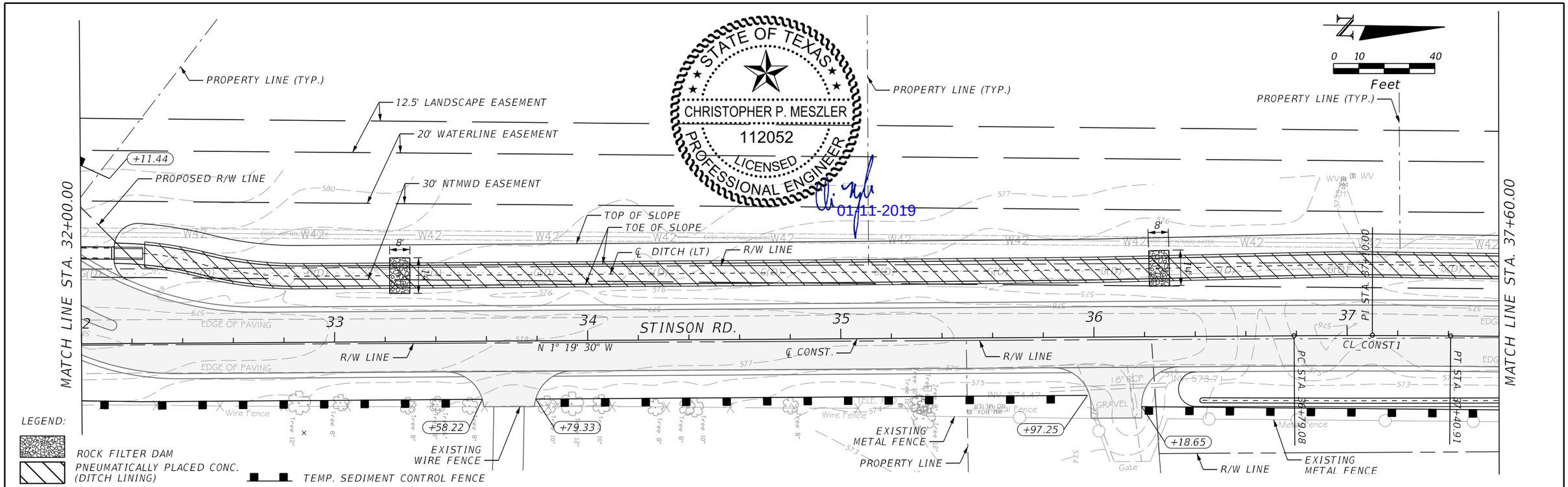

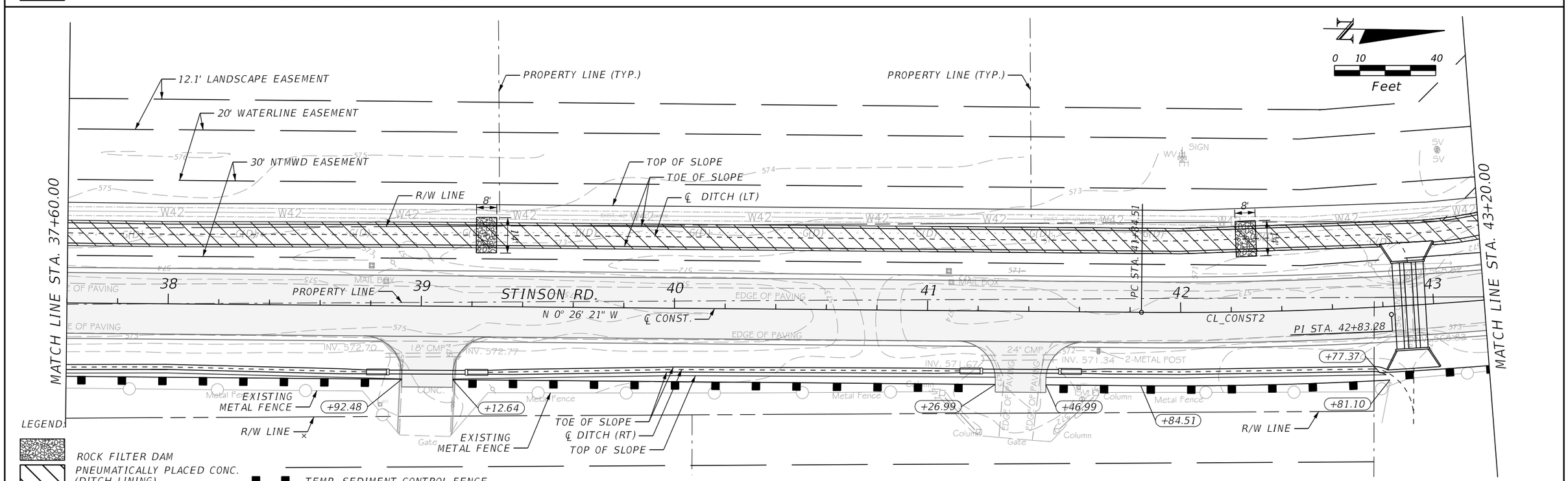

STATE OF TEXAS
CHRISTOPHER P. MESZLER
112052
LICENSED
PROFESSIONAL ENGINEER
01/11/2019

REVISIONS	
DATE	DESCRIPTION

LAKES ENGINEERING, INC.

CHRISTOPHER P. MESZLER, P.E.
LIC. No. 112052
1903 CENTRAL DRIVE, SUITE #405
BEDFORD, TX 76021
PHONE: 817.618.3640
TBPE REG. F-15243

STINSON ROAD IMPROVEMENTS
CITY OF LUCAS
PUBLICK WORKS DEPARTMENT
665 COUNTRY CLUB ROAD
LUCAS, TX. 75002

EROSION CONTROL PLAN

SHEET NO.
47

CALL BEFORE YOU DIG
TEXAS ONE CALL PARTICIPANTS REQUEST 48 HOURS NOTICE BEFORE YOU DIG. DRILL OR BLAST - STOP CALL
TEXAS ONE CALL SYSTEM 1-800-DIG-TESS

PLOTTED BY: hrementeria
PLOT DATE: 1/11/2019
LAST SAVED: 12:19:42 PM
LOCATION: C:\Transfer\18-112 Stinson Road\18112 Stinson Plan Set\drainage\SWPPRD04.DGN

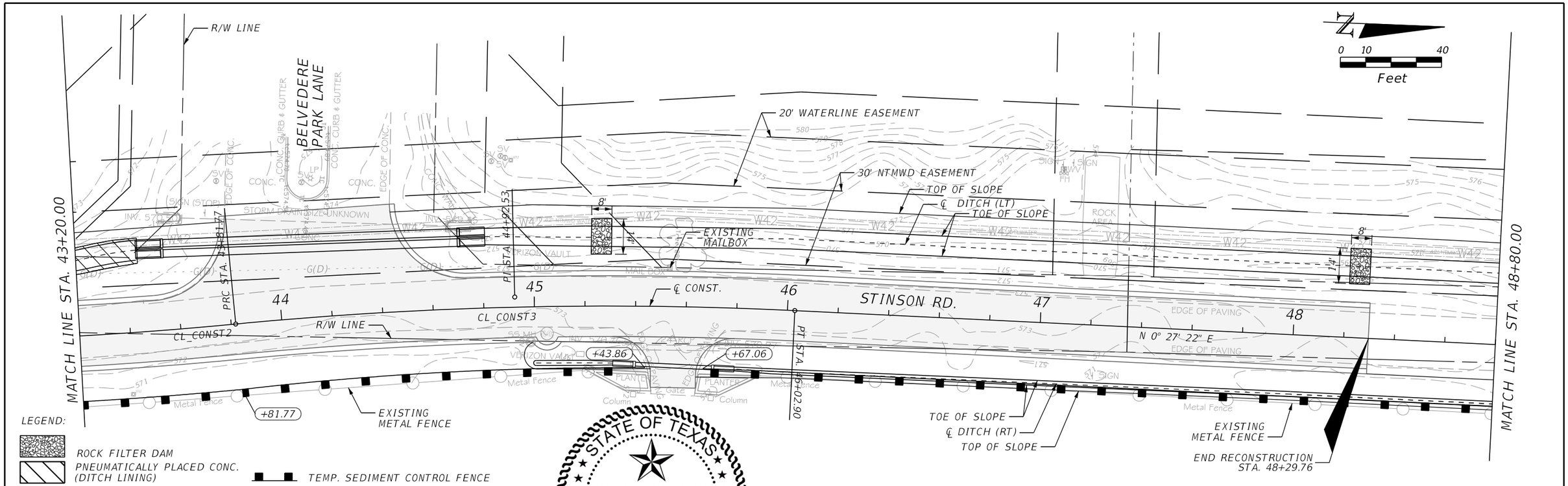

STATE OF TEXAS
CHRISTOPHER P. MESZLER
112052
LICENSED
PROFESSIONAL ENGINEER
01-11-2019

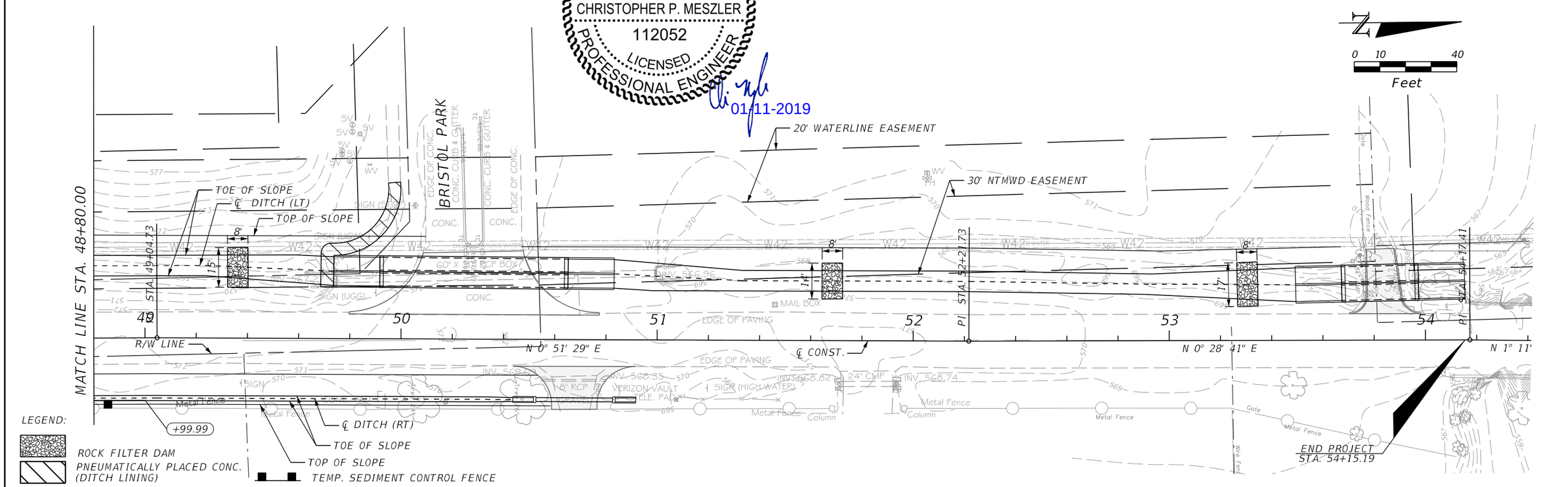

PLOTTED BY: hrementeria
PLOT DATE: 1/11/2019
LAST SAVED: 12:19:43 PM
LOCATION: C:\Transfer\18-112 Stinson Road\18112 Stinson Plan Set\drainage\SWPPRD05.DGN

REVISIONS	
DATE	DESCRIPTION

LAKES ENGINEERING, INC.

CHRISTOPHER P. MESZLER, P.E.
LIC. No. 112052
1903 CENTRAL DRIVE, SUITE #405
BEDFORD, TX 76021
PHONE: 817.618.3640
TBPE REG. F-15243

STINSON ROAD IMPROVEMENTS
CITY OF LUCAS
PUBLIC WORKS DEPARTMENT
665 COUNTRY CLUB ROAD
LUCAS, TX. 75002

EROSION CONTROL PLAN

SHEET NO. 48

CALL BEFORE YOU DIG
TEXAS ONE CALL PARTICIPANTS REQUEST 48 HOURS NOTICE BEFORE YOU DIG, DRILL, OR BLAST - STOP CALL
TEXAS ONE CALL SYSTEM 1-800-DIG-TESS

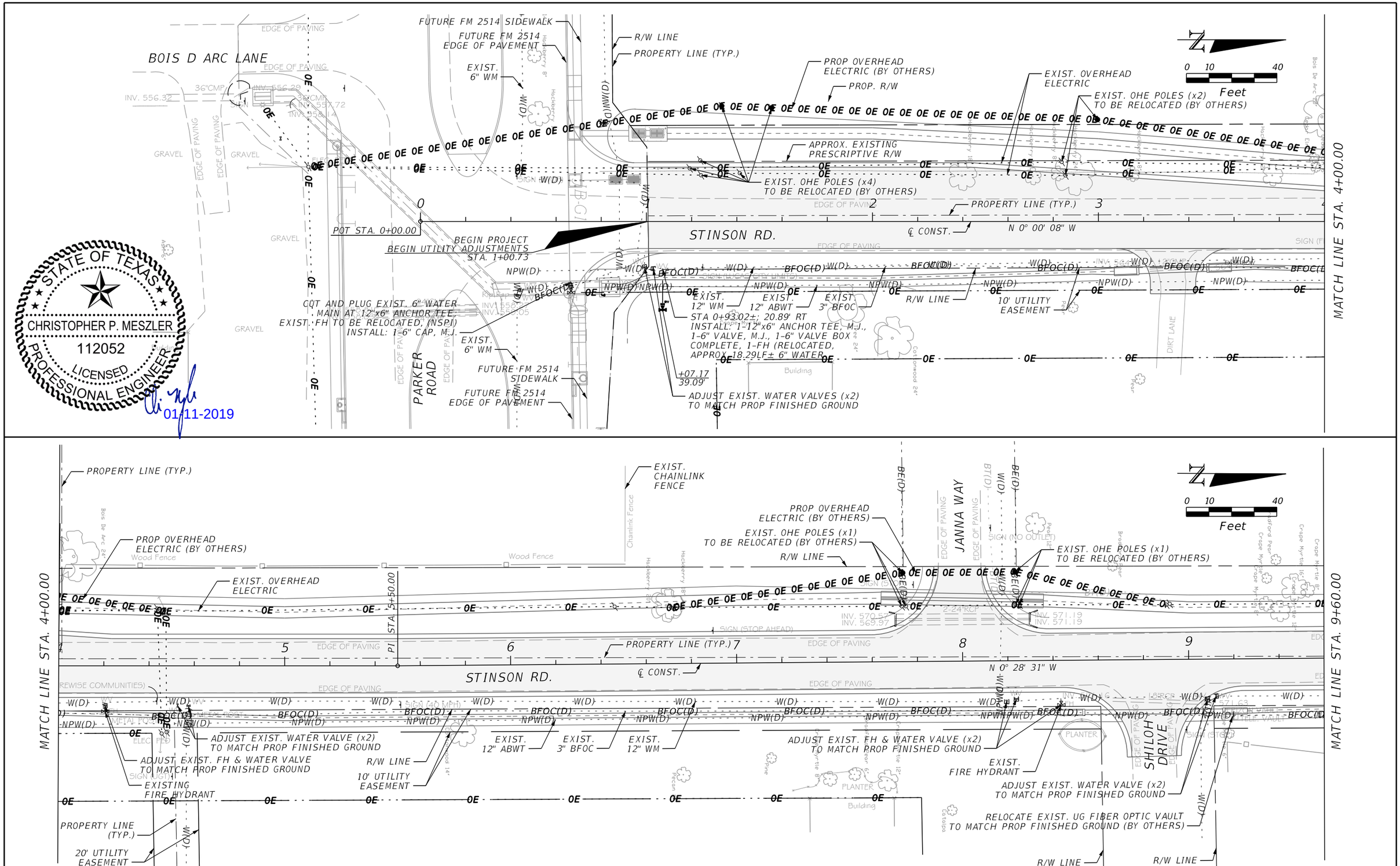

PLOTTED BY: hrementeria
PLOT DATE: 1/11/2019
LAST SAVED: 12:19:45 PM
LOCATION: C:\Transfer\18-112 Stinson Road\18112 Stinson Plan Set\roadway\UTADR01.DGN

REVISIONS	
DATE	DESCRIPTION

LAKES ENGINEERING, INC.

CHRISTOPHER P. MESZLER, P.E.
LIC. No. 112052
1903 CENTRAL DRIVE, SUITE #405
BEDFORD, TX 76021
PHONE: 817.618.3640
TBPE REG. F-15243

STINSON ROAD IMPROVEMENTS
CITY OF LUCAS
PUBLIC WORKS DEPARTMENT
665 COUNTRY CLUB ROAD
LUCAS, TX. 75002

UTILITY ADJUSTMENTS

SHEET NO. 49

CALL BEFORE YOU DIG
TEXAS ONE CALL PARTICIPANTS REQUEST 48 HOURS NOTICE BEFORE YOU DIG, DRILL, OR BLAST - STOP CALL
TEXAS ONE CALL SYSTEM 1-800-DIG-TESS

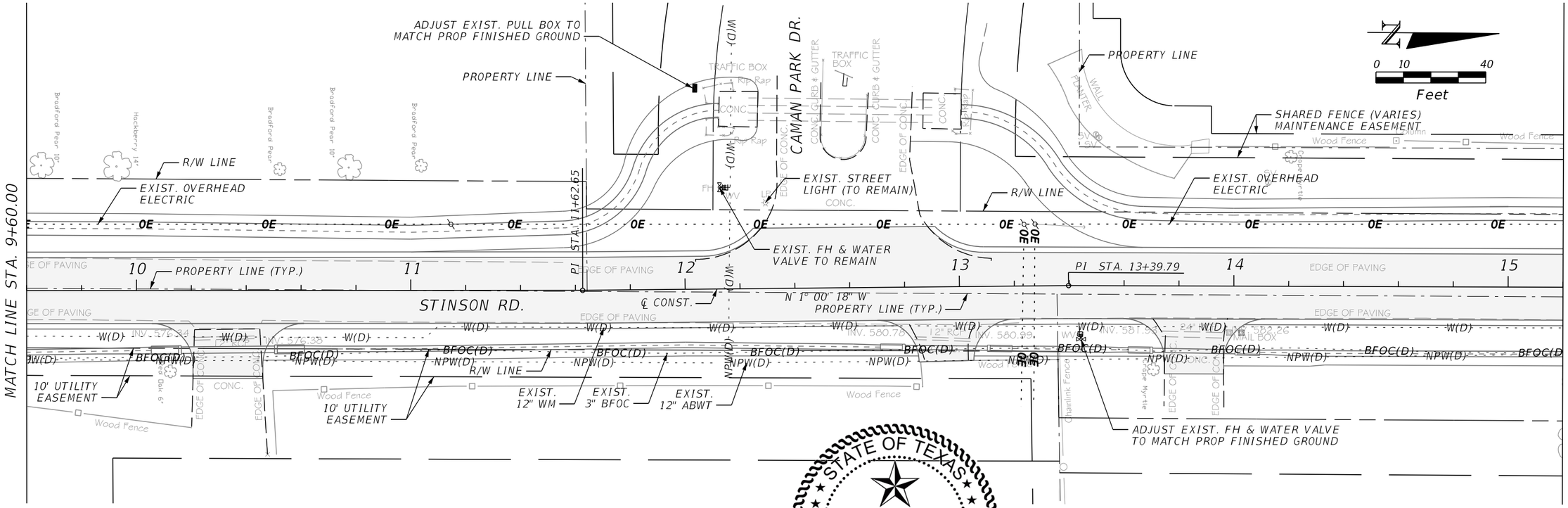

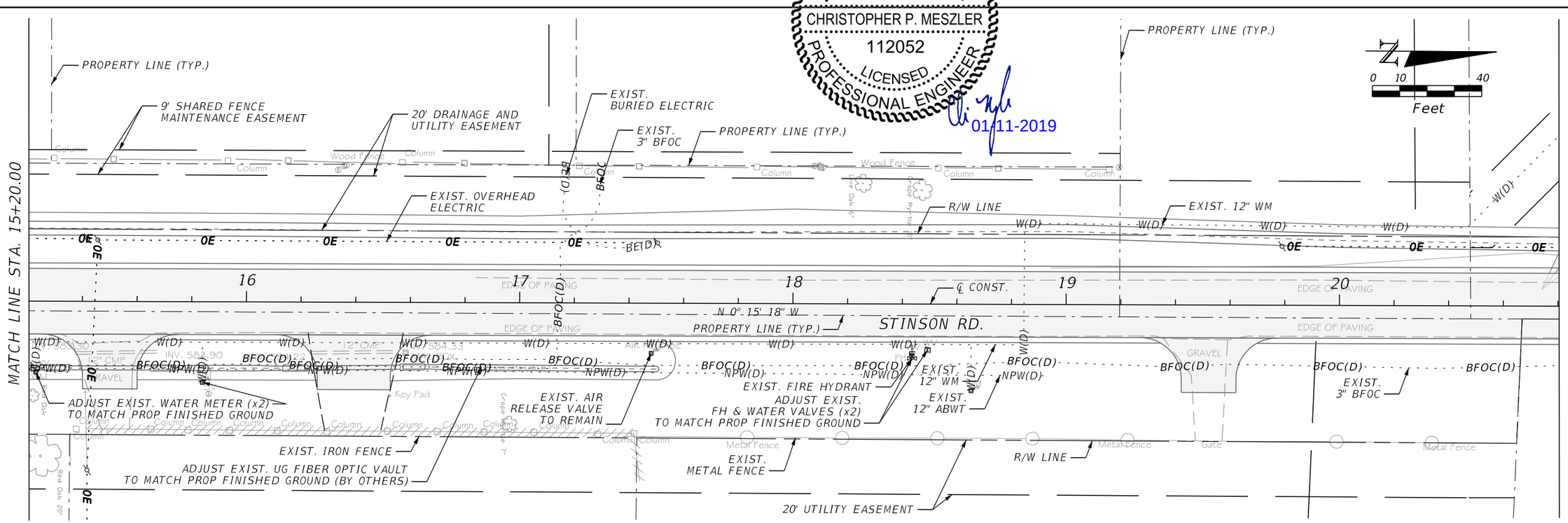

STATE OF TEXAS
CHRISTOPHER P. MESZLER
112052
LICENSED
PROFESSIONAL ENGINEER
01-11-2019

PLOTTED BY: hrementeria
PLOT DATE: 1/11/2019
LAST SAVED: 12:19:46 PM
LOCATION: C:\Transfer\18-112 Stinson Road\18112 Stinson Plan Set\roadway\UTADRD02.DGN

REVISIONS	
DATE	DESCRIPTION

LAKES ENGINEERING, INC.

CHRISTOPHER P. MESZLER, P.E.
LIC. No. 112052
1903 CENTRAL DRIVE, SUITE #405
BEDFORD, TX 76021
PHONE: 817.618.3640
TBPE REG. F-15243

STINSON ROAD IMPROVEMENTS
CITY OF LUCAS
PUBLIC WORKS DEPARTMENT
665 COUNTRY CLUB ROAD
LUCAS, TX. 75002

UTILITY ADJUSTMENTS

SHEET NO. 50

CALL BEFORE YOU DIG
TEXAS ONE CALL PARTICIPANTS REQUEST 48 HOURS NOTICE BEFORE YOU DIG, DRILL, OR BLAST - STOP CALL
TEXAS ONE CALL SYSTEM 1-800-DIG-TESS

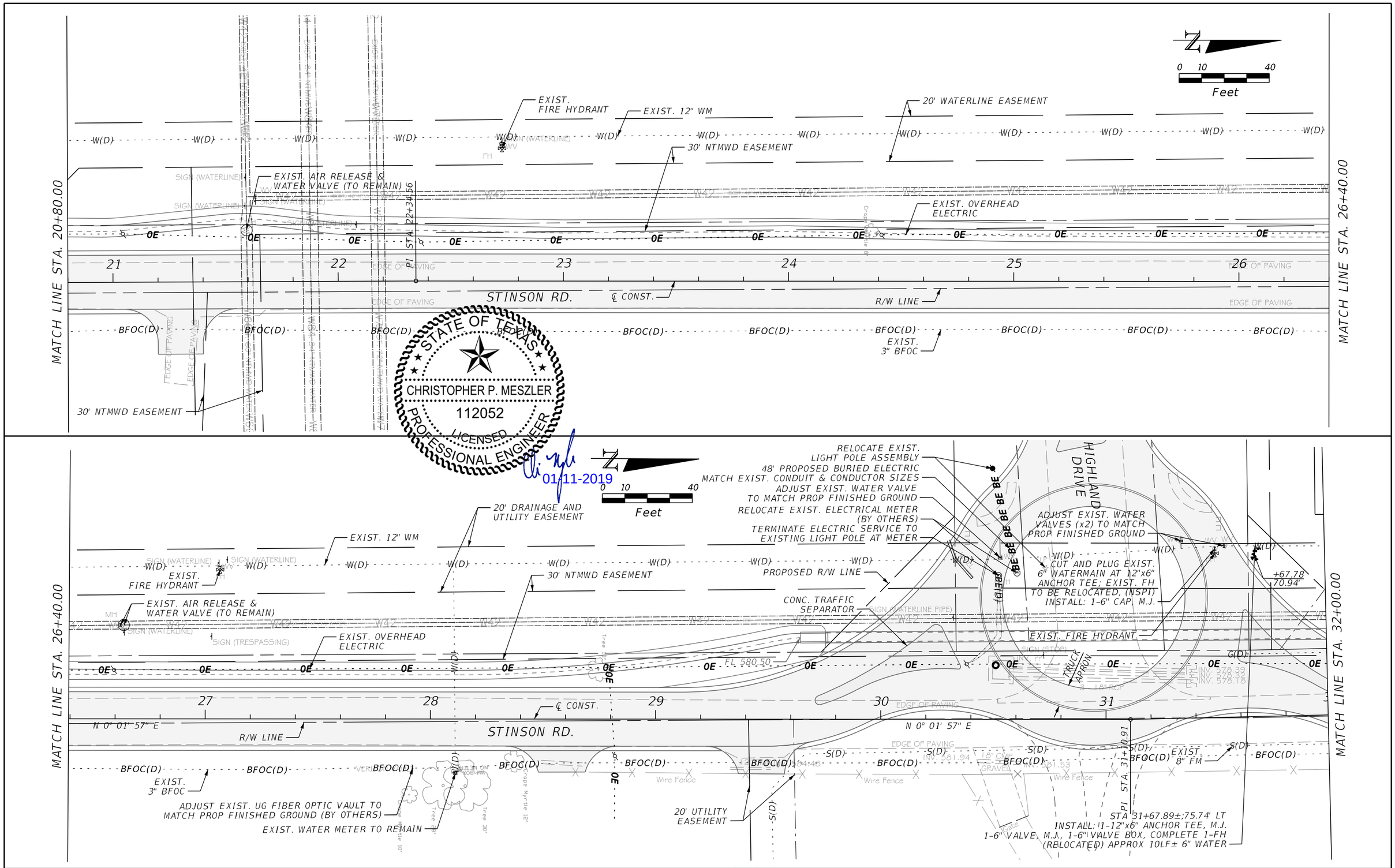

PLOTTED BY: hrementeria
PLOT DATE: 1/11/2019
LAST SAVED: 12:19:47 PM
LOCATION: C:\Transfer\18-112 Stinson Road\18112 Stinson Plan Set\roadway\UTADRD03.DGN

REVISIONS	
DATE	DESCRIPTION

LAKES ENGINEERING, INC.

CHRISTOPHER P. MESZLER, P.E.
LIC. No. 112052
1903 CENTRAL DRIVE, SUITE #405
BEDFORD, TX 76021
PHONE: 817.618.3640
TBPE REG. F-15243

STINSON ROAD IMPROVEMENTS
CITY OF LUCAS
PUBLIC WORKS DEPARTMENT
665 COUNTRY CLUB ROAD
LUCAS, TX. 75002

UTILITY ADJUSTMENTS

SHEET NO.
51

CALL BEFORE YOU DIG
TEXAS ONE CALL SYSTEM 1-800-DIG-TESS
48 HOURS NOTICE BEFORE YOU DIG, DRILL, OR BLAST - STOP CALL

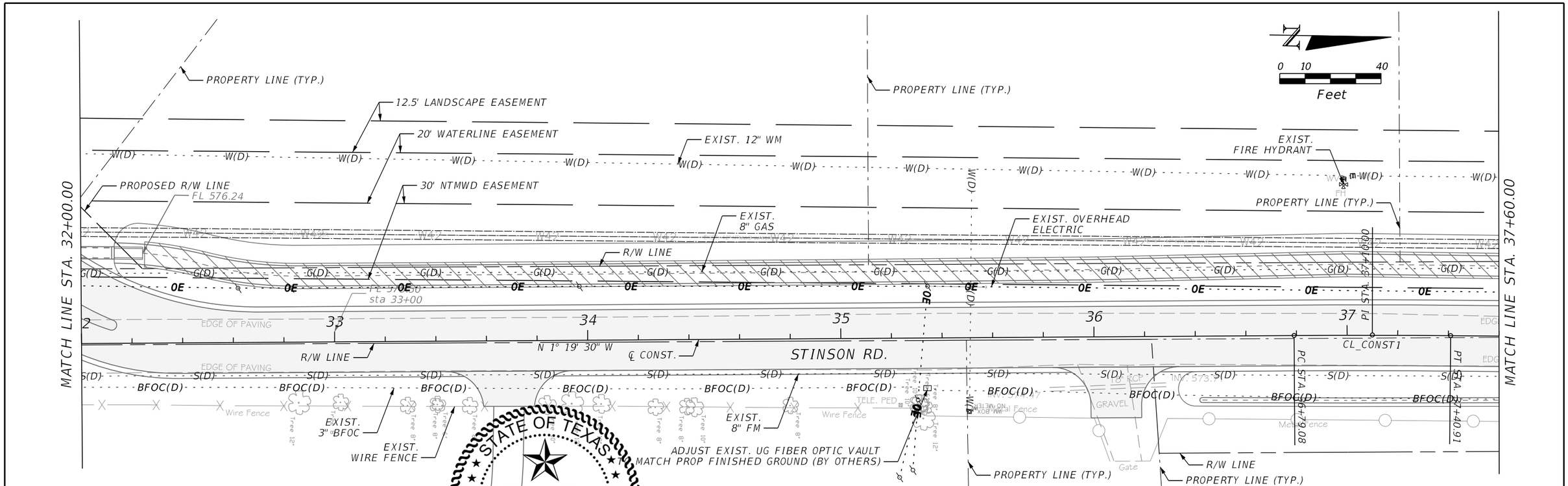

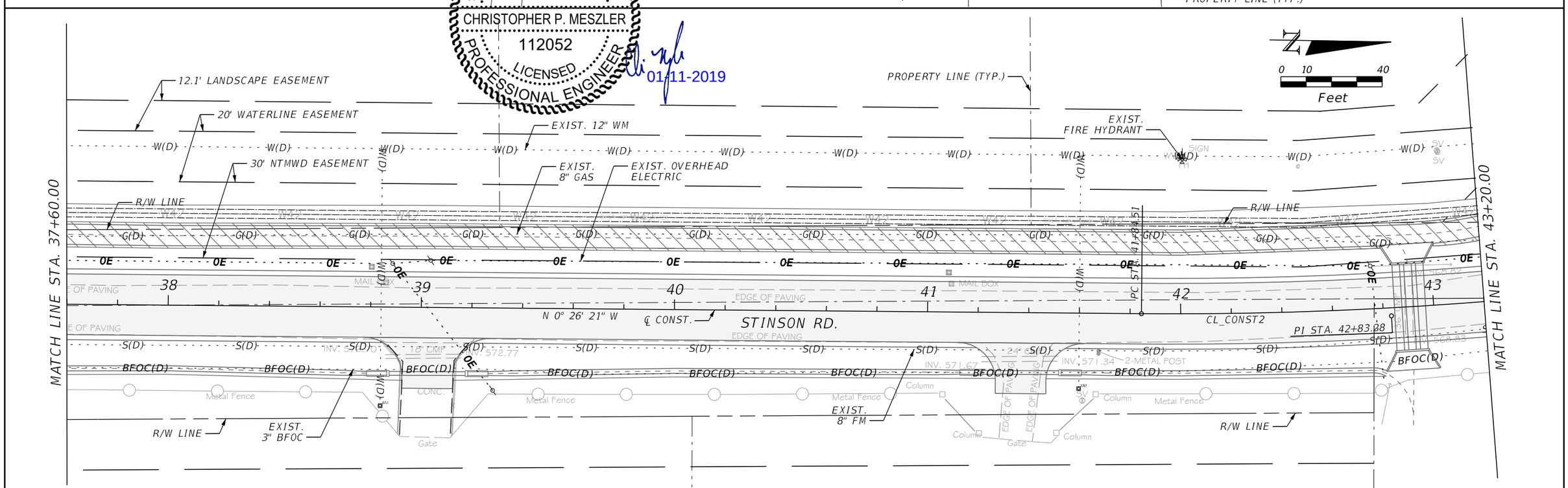

STATE OF TEXAS
CHRISTOPHER P. MESZLER
112052
LICENSED
PROFESSIONAL ENGINEER
01-11-2019

PLOTTED BY: hrementeria
PLOT DATE: 1/11/2019
LAST SAVED: 12:19:49 PM
LOCATION: C:\Transfer\18-112 Stinson Road\18112 Stinson Plan Set\roadway\UTADRD04.DGN

REVISIONS	
DATE	DESCRIPTION

LAKES ENGINEERING, INC.

CHRISTOPHER P. MESZLER, P.E.
LIC. No. 112052
1903 CENTRAL DRIVE, SUITE #405
BEDFORD, TX 76021
PHONE: 817.618.3640
TBPE REG. F-15243

STINSON ROAD IMPROVEMENTS
CITY OF LUCAS
PUBLIC WORKS DEPARTMENT
665 COUNTRY CLUB ROAD
LUCAS, TX. 75002

UTILITY ADJUSTMENTS

SHEET NO. 52

CALL BEFORE YOU DIG
TEXAS ONE CALL PARTICIPANTS REQUEST 48 HOURS NOTICE BEFORE YOU DIG, DRILL, OR BLAST - STOP CALL
TEXAS ONE CALL SYSTEM 1-800-DIG-TESS

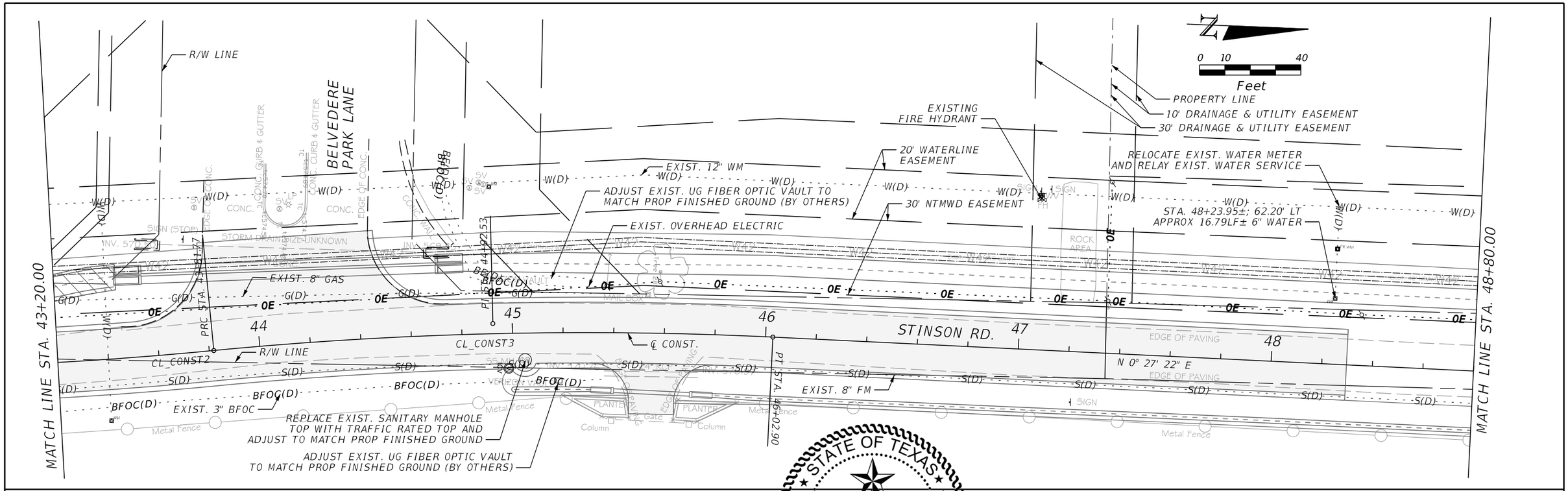

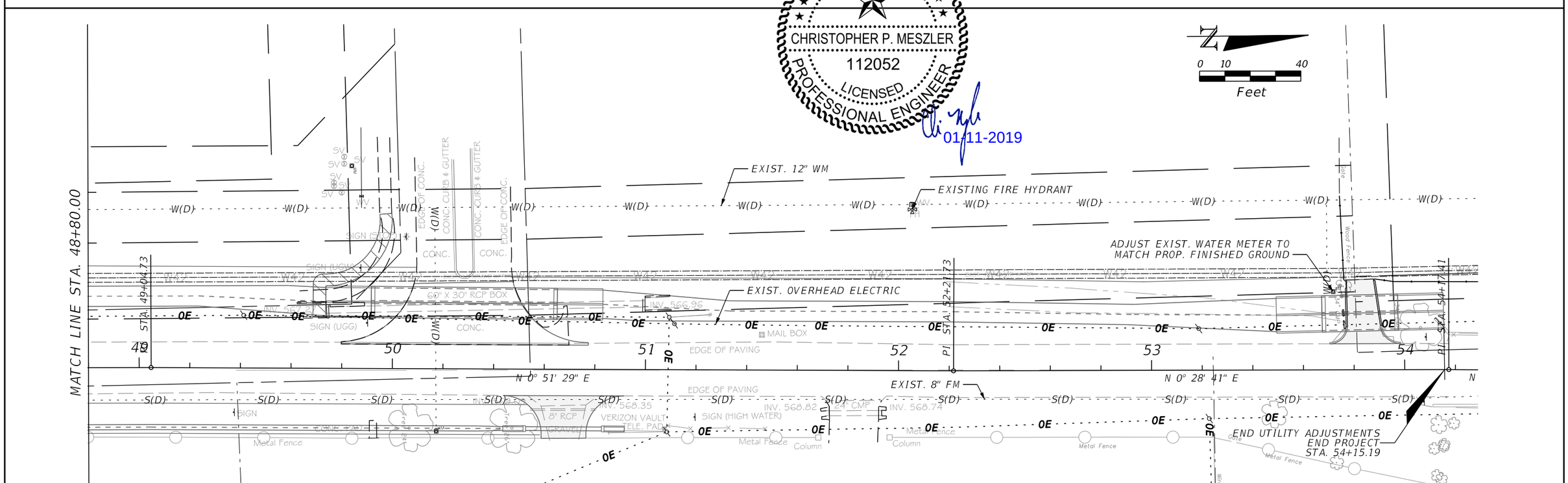

STATE OF TEXAS
CHRISTOPHER P. MESZLER
112052
LICENSED
PROFESSIONAL ENGINEER
01/11-2019

PLOTTED BY: hrementeria
PLOT DATE: 1/11/2019
LAST SAVED: 12:19:50 PM
LOCATION: C:\Transfer\18-112 Stinson Road\18112 Stinson Plan Set\roadway\UTADRD05.DGN

REVISIONS	
DATE	DESCRIPTION

LAKES ENGINEERING, INC.

CHRISTOPHER P. MESZLER, P.E.
LIC. No. 112052
1903 CENTRAL DRIVE, SUITE #405
BEDFORD, TX 76021
PHONE: 817.618.3640
TBPE REG. F-15243

STINSON ROAD IMPROVEMENTS
CITY OF LUCAS
PUBLIC WORKS DEPARTMENT
665 COUNTRY CLUB ROAD
LUCAS, TX. 75002

UTILITY ADJUSTMENTS

SHEET NO. 53

CALL BEFORE YOU DIG
TEXAS ONE CALL PARTICIPANTS REQUEST 48 HOURS NOTICE BEFORE YOU DIG, DRILL, OR BLAST - STOP CALL
TEXAS ONE CALL SYSTEM 1-800-DIG-TESS

DISCLAIMER:
The use of this standard is governed by the "Texas Engineering Practice Act". No warranty of any kind is made by TxDOT for any purpose whatsoever. TxDOT assumes no responsibility for the conversion of this standard to other formats or for incorrect results or damages resulting from its use.

BARRICADE AND CONSTRUCTION (BC) STANDARD SHEETS GENERAL NOTES:

1. The Barricade and Construction Standard Sheets (BC sheets) are intended to show typical examples for placement of temporary traffic control devices, construction pavement markings, and typical work zone signs. The information contained in these sheets meet or exceed the requirements shown in the "Texas Manual on Uniform Traffic Control Devices" (TMUTCD).

2. The development and design of the Traffic Control Plan (TCP) is the responsibility of the Engineer.

3. The Contractor may propose changes to the TCP that are signed and sealed by a licensed professional engineer for approval. The Engineer may develop, sign and seal Contractor proposed changes.

4. The Contractor is responsible for installing and maintaining the traffic control devices as shown in the plans. The Contractor may not move or change the approximate location of any device without the approval of the Engineer.

5. Geometric design of lane shifts and detours should, when possible, meet the applicable design criteria contained in manuals such as the American Association of State Highway and Transportation Officials (AASHTO), "A Policy on Geometric Design of Highways and Streets," the TxDOT "Roadway Design Manual" or engineering judgment.

6. When projects abut, the Engineer(s) may omit the END ROAD WORK, TRAFFIC FINES DOUBLE, and other advance warning signs if the signing would be redundant and the work areas appear continuous to the motorists. If the adjacent project is completed first, the Contractor shall erect the necessary warning signs as shown on these sheets, the TCP sheets or as directed by the Engineer. The BEGIN ROAD WORK NEXT X MILES sign shall be revised to show appropriate work zone distance.

7. The Engineer may require duplicate warning signs on the median side of divided highways where median width will permit and traffic volumes justify the signing.

8. All signs shall be constructed in accordance with the details found in the "Standard Highway Sign Designs for Texas," latest edition. Sign details not shown in this manual shall be shown in the plans or the Engineer shall provide a detail to the Contractor before the sign is manufactured.

9. The temporary traffic control devices shown in the illustrations of the BC sheets are examples. As necessary, the Engineer will determine the most appropriate traffic control devices to be used.

10. As shown on BC(2), the OBEY WARNING SIGNS STATE LAW sign, STAY ALERT TALK OR TEXT LATER (see Sign Detail G20-10T) and the WORK ZONE TRAFFIC FINES DOUBLE sign with plaque shall be erected in advance of the CSJ limits. However, the TRAFFIC FINES DOUBLE sign will not be required on projects consisting solely of mobile operation work, such as striping or milling edgeline rumble strips. The BEGIN ROAD WORK NEXT X MILES, CONTRACTOR and END ROAD WORK signs shall be erected at or near the CSJ limits.

11. Except for devices required by Note 10, traffic control devices should be in place only while work is actually in progress or a definite need exists.

12. The Engineer has the final decision on the location of all traffic control devices.

13. Inactive equipment and work vehicles, including workers' private vehicles must be parked away from travel lanes. They should be as close to the right-of-way line as possible, or located behind a barrier or guardrail, or as approved by the Engineer.

WORKER SAFETY APPAREL NOTES:

1. Workers on foot who are exposed to traffic or to construction equipment within the right-of-way shall wear high-visibility safety apparel meeting the requirements of ISEA "American National Standard for High-Visibility Apparel," or equivalent revisions, and labeled as ANSI 107-2004 standard performance for Class 2 or 3 risk exposure. Class 3 garments should be considered for high traffic volume work areas or night time work.

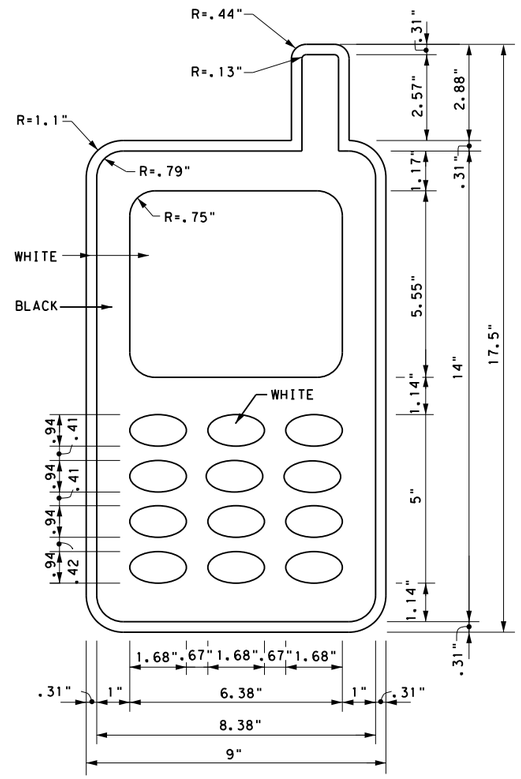

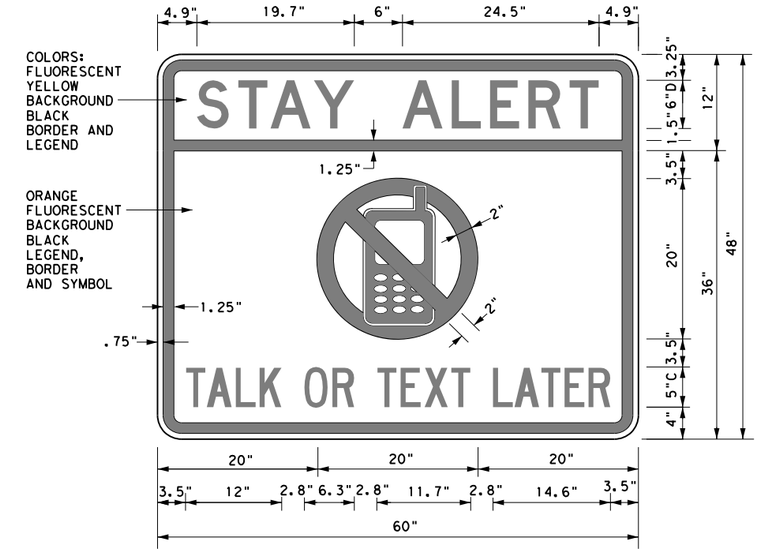

3.0" Radius, 1.25" Border, 0.75" Indent, Black on Yellow;
[STAY ALERT] Font: D
3.0" Radius, 1.25" Border, 0.75" Indent, Black on Orange;
[TALK OR TEXT LATER] Font: C specified length;

SIGN DETAIL (G20-10T)

Only pre-qualified products shall be used. The "Compliant Work Zone Traffic Control Devices List" (CWZTCD) describes pre-qualified products and their sources and may be found on-line at the web address given below or by contacting:

Texas Department of Transportation
Traffic Operations Division - TE
Phone (512) 416-3118

THE DOCUMENTS BELOW CAN BE FOUND ON-LINE AT http://www.txdot.gov
COMPLIANT WORK ZONE TRAFFIC CONTROL DEVICES LIST (CWZTCD)
DEPARTMENTAL MATERIAL SPECIFICATIONS (DMS)
MATERIAL PRODUCER LIST (MPL)
ROADWAY DESIGN MANUAL - SEE "MANUALS (ONLINE MANUALS)"
STANDARD HIGHWAY SIGN DESIGNS FOR TEXAS (SHSD)
TEXAS MANUAL ON UNIFORM TRAFFIC CONTROL DEVICES (TMUTCD)
TRAFFIC ENGINEERING STANDARD SHEETS

Texas Department of Transportation — Traffic Operations Division Standard

BARRICADE AND CONSTRUCTION GENERAL NOTES AND REQUIREMENTS

BC(1)-14

FILE: bc-14.dgn	DN: TxDOT	CK: TxDOT	DW: TxDOT	CK: TxDOT
© TxDOT November 2002	CONT	SECT	JOB	HIGHWAY
REVISIONS 4-03 5-10 8-14 9-07 7-13	DIST	COUNTY		SHEET NO.

DATE:
FILE:

DISCLAIMER:
The use of this standard is governed by the "Texas Engineering Practice Act". No warranty of any kind is made by TxDOT for any purpose whatsoever. TxDOT assumes no responsibility for the conversion of this standard to other formats or for incorrect results or damages resulting from its use.

TYPICAL LOCATION OF CROSSROAD SIGNS

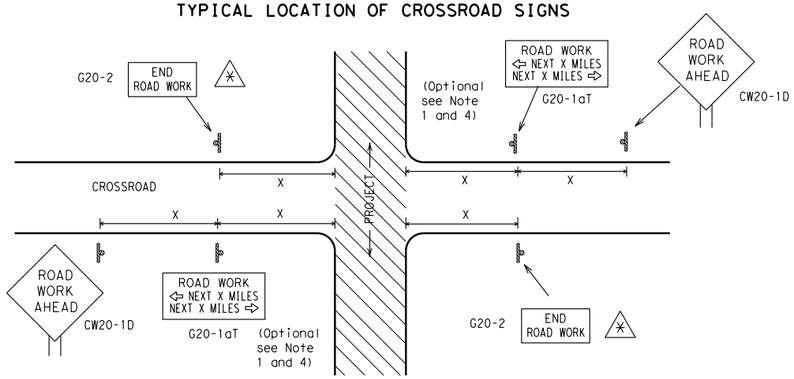

✱ May be mounted on back of "ROAD WORK AHEAD"(CW20-1D) sign with approval of Engineer. (See note 2 below)

1. The typical minimum signing on a crossroad approach should be a "ROAD WORK AHEAD" (CW20-1D)sign and a (G20-2) "END ROAD WORK" sign, unless noted otherwise in plans.
2. The Engineer may use the reduced size 36" x 36" ROAD WORK AHEAD (CW20-1D) sign mounted back to back with the reduced size 36" x 18" "END ROAD WORK"(G20-2) sign on low volume crossroads (see Note 4 under "Typical Construction Warning Sign Size and Spacing"). See the "Standard Highway Sign Designs for Texas" manual for sign details. The Engineer may omit the advance warning signs on low volume crossroads. The Engineer will determine whether a road is low volume. This information shall be shown in the plans.
3. Based on existing field conditions, the Engineer/Inspector may require additional signs such as FLAGGER AHEAD, LOOSE GRAVEL, or other appropriate signs. When additional signs are required, these signs will be considered part of the minimum requirements. The Engineer/Inspector will determine the proper location and spacing of any sign not shown on the BC sheets, Traffic Control Plan sheets or the Work Zone Standard Sheets.
4. The "ROAD WORK NEXT X MILES"(G20-1aT)sign shall be required at high volume crossroads to advise motorists of the length of construction in either direction from the intersection. The Engineer will determine whether a roadway is considered high volume.
5. Additional traffic control devices may be shown elsewhere in the plans for higher volume crossroads.
6. When work occurs in the intersection area, appropriate traffic control devices, as shown elsewhere in the plans or as determined by the Engineer/Inspector, shall be in place.

T-INTERSECTION

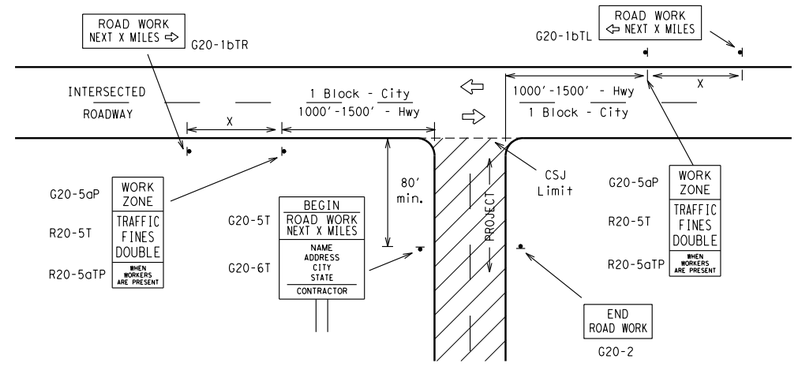

CSJ LIMITS AT T-INTERSECTION

1. The Engineer will determine the types and location of any additional traffic control devices, such as a flagger and accompanying signs, or other signs, that should be used when work is being performed at or near an intersection.
2. If construction closes the road at a T-intersection the Contractor shall place the "CONTRACTOR NAME"(G20-6T) sign behind the Type 3 Barricades for the road closure (see BC(10) also). The "ROAD WORK NEXT X MILES" left arrow(G20-1bTL) and "ROAD WORK NEXT X MILES" right arrow (G20-1bTR)" signs shall be replaced by the detour signing called for in the plans.

TYPICAL CONSTRUCTION WARNING SIGN SIZE AND SPACING[1,5,6]

SIZE

Sign Number or Series	Conventional Road	Expressway/ Freeway
CW20[4] CW21 CW22 CW23 CW25	48" x 48"	48" x 48"
CW1, CW2, CW7, CW8, CW9, CW11, CW14	36" x 36"	48" x 48"
CW3, CW4, CW5, CW6, CW8-3, CW10, CW12	48" x 48"	48" x 48"

SPACING

Posted Speed	Sign Spacing "X" △
MPH	Feet (Apprx.)
30	120
35	160
40	240
45	320
50	400
55	500[2]
60	600[2]
65	700[2]
70	800[2]
75	900[2]
80	1000[2]
✱	✱[3]

✱ For typical sign spacings on divided highways, expressways and freeways, see Part 6 of the "Texas Manual on Uniform Traffic Control Devices" (TMUTCD) typical application diagrams or TCP Standard Sheets.

△ Minimum distance from work area to first Advance Warning sign nearest the work area and/or distance between each additional sign.

GENERAL NOTES

1. Special or larger size signs may be used as necessary.
2. Distance between signs should be increased as required to have 1500 feet advance warning.
3. Distance between signs should be increased as required to have 1/2 mile or more advance warning.
4. 36" x 36" "ROAD WORK AHEAD" (CW20-1D)signs may be used on low volume crossroads at the discretion of the Engineer. See Note 2 under "Typical Location of Crossroad Signs".
5. Only diamond shaped warning sign sizes are indicated.
6. See sign size listing in "TMUTCD", Sign Appendix or the "Standard Highway Sign Designs for Texas" manual for complete list of available sign design sizes.

WORK AREAS IN MULTIPLE LOCATIONS WITHIN CSJ LIMITS

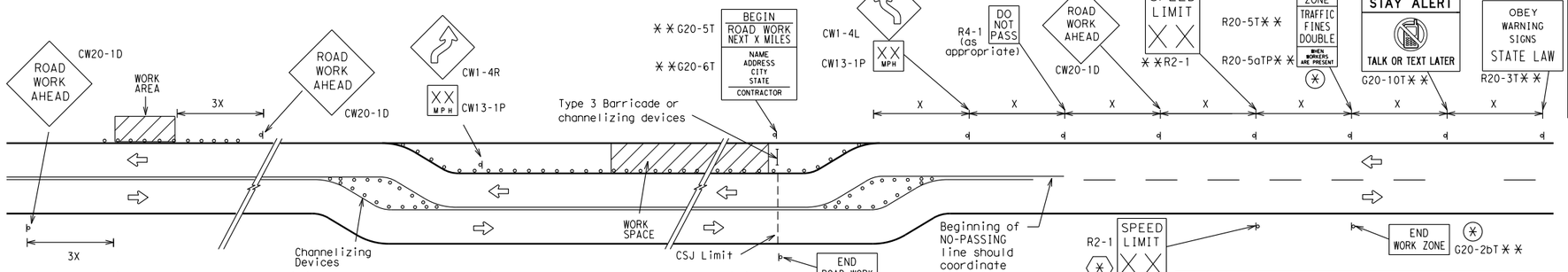

When extended distances occur between minimal work spaces, the Engineer/Inspector should ensure additional "ROAD WORK AHEAD"(CW20-1D)signs are placed in advance of these work areas to remind drivers they are still within the project limits. See the applicable TCP sheets for exact location and spacing of signs and channelizing devices.

SAMPLE LAYOUT OF SIGNING FOR WORK BEGINNING DOWNSTREAM OF THE CSJ LIMITS

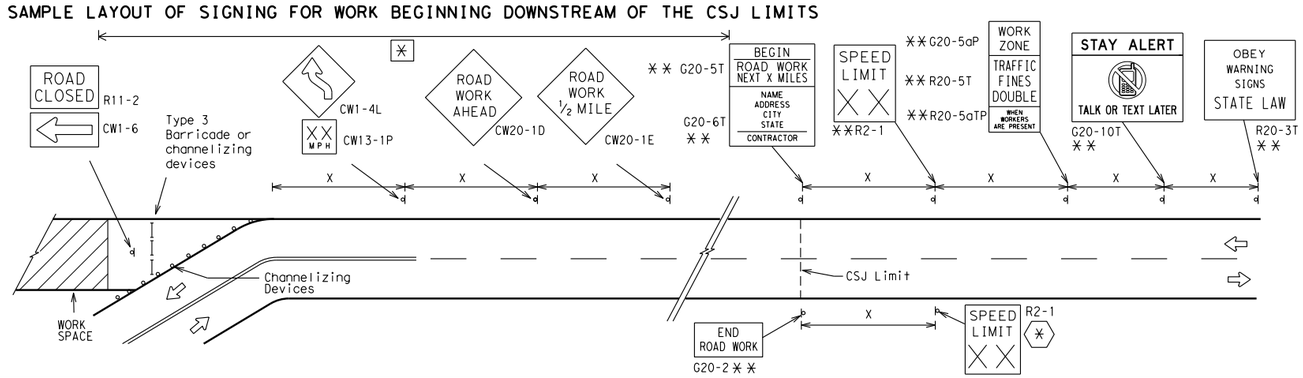

NOTES

The Contractor shall determine the appropriate distance to be placed on the G20-1 series signs and "BEGIN ROAD WORK NEXT X MILES"(G20-5T)sign for each specific project. This distance shall replace the "X" and shall be rounded to the nearest whole mile with the approval of the Engineer. No decimals shall be used.

(✱) The "BEGIN WORK ZONE"(G20-9TP) and "END WORK ZONE" (G20-2bT) shall be used as shown on the sample layout when advance signs are required outside the CSJ Limits. They inform the motorist of entering or leaving a part of the work zone lying outside the CSJ Limits where traffic fines may double if workers are present.

✱✱ Required CSJ Limit signing. See Note 10 on BC(1). TRAFFIC FINES DOUBLE signs will not be required on projects consisting solely of mobile operations work.

[✱] Area for placement of "ROAD WORK AHEAD" (CW20-1D)sign and other signs or devices as called for on the Traffic Control Plan.

(✱) Contractor will install a regulatory speed limit sign at the end of the work zone.

LEGEND

⊢⊣	Type 3 Barricade
○ ○ ○	Channelizing Devices
▬	Sign
X	See Typical Construction Warning Sign Size and Spacing chart or the TMUTCD for sign spacing requirements.

SHEET 2 OF 12

Texas Department of Transportation — Traffic Operations Division Standard

BARRICADE AND CONSTRUCTION PROJECT LIMIT

BC(2)-14

FILE: bc-14.dgn	DN: TxDOT	CK: TxDOT	DW: TxDOT	CK: TxDOT
©TxDOT November 2002	CONT	SECT	JOB	HIGHWAY
REVISIONS 9-07 8-14 7-13	DIST		COUNTY	SHEET NO.

DATE:
FILE:

TYPICAL APPLICATION OF WORK ZONE SPEED LIMIT SIGNS

Work zone speed limits shall be regulatory, established in accordance with the "Procedures for Establishing Speed Zones," and approved by the Texas Transportation Commission, or by City Ordinance when within Incorporated City Limits.

Reduced speeds should only be posted in the vicinity of work activity and not throughout the entire project.

Regulatory work zone speed signs (R2-1) shall be removed or covered during periods when they are not needed.

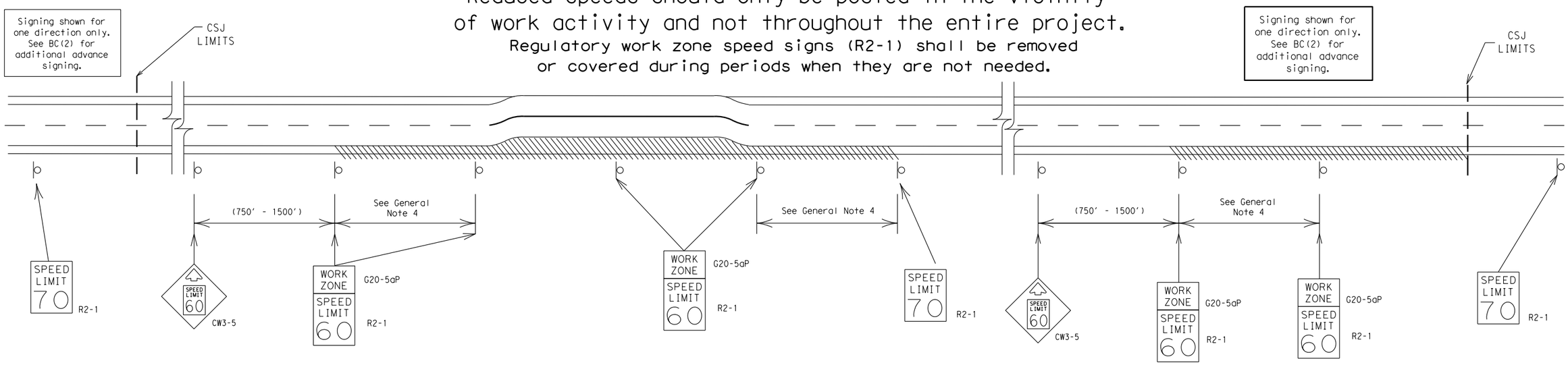

GUIDANCE FOR USE:

LONG/INTERMEDIATE TERM WORK ZONE SPEED LIMITS

This type of work zone speed limit should be included on the design of the traffic control plans when restricted geometrics with a lower design speed are present in the work zone and modification of the geometrics to a higher design speed is not feasible.

Long/Intermediate Term Work Zone Speed Limit signs, when approved as described above, should be posted and visible to the motorist when work activity is present. Work activity may also be defined as a change in the roadway that requires a reduced speed for motorists to safely negotiate the work area, including:

a) rough road or damaged pavement surface
b) substantial alteration of roadway geometrics (diversions)
c) construction detours
d) grade
e) width
f) other conditions readily apparent to the driver

As long as any of these conditions exist, the work zone speed limit signs should remain in place.

SHORT TERM WORK ZONE SPEED LIMITS

This type of work zone speed limit may be included on the design of the traffic control plans when workers or equipment are not behind concrete barrier, when work activity is within 10 feet of the traveled way or actually in the travelled way.

Short Term Work Zone Speed Limit signs should be posted and visible to the motorists only when work activity is present. When work activity is not present, signs shall be removed or covered.
(See Removing or Covering on BC(4)).

GENERAL NOTES

1. Regulatory work zone speed limits should be used only for sections of construction projects where speed control is of major importance.
2. Regulatory work zone speed limit signs shall be placed on supports at a 7 foot minimum mounting height.
3. Speed zone signs are illustrated for one direction of travel and are normally posted for each direction of travel.
4. Frequency of work zone speed limit signs should be:
   40 mph and greater 0.2 to 2 miles
   35 mph and less 0.2 to 1 mile
5. Regulatory speed limit signs shall have black legend and border on a white reflective background (See "Reflective Sheeting" on BC(4)).
6. Fabrication, erection and maintenance of the"ADVANCE SPEED LIMIT"(CW3-5)sign, "WORK ZONE"(G20-5aP) plaque and the "SPEED LIMIT"(R2-1)signs shall not be paid for directly, but shall be considered subsidiary to Item 502.
7. Turning signs from view, laying signs over or down will not be allowed, unless as otherwise noted under "REMOVING OR COVERING" on BC(4).
8. Techniques that may help reduce traffic speeds include but are not limited to:
   A. Law enforcement.
   B. Flagger stationed next to sign.
   C. Portable changeable message sign (PCMS).
   D. Low-power (drone) radar transmitter.
   E. Speed monitor trailers or signs.
9. Speeds shown on details above are for illustration only.
   Work Zone Speed Limits should only be posted as approved for each project.
10. For more specific guidance concerning the type of work, work zone conditions and factors impacting allowable regulatory construction speed zone reduction see TxDOT form #1204 in the TxDOT e-form system.

DISCLAIMER:
The use of this standard is governed by the "Texas Engineering Practice Act". No warranty of any kind is made by TxDOT for any purpose whatsoever. TxDOT assumes no responsibility for the conversion of this standard to other formats or for incorrect results or damages resulting from its use.

DATE:
FILE:

SHEET 3 OF 12

Texas Department of Transportation — Traffic Operations Division Standard

BARRICADE AND CONSTRUCTION WORK ZONE SPEED LIMIT

BC(3)-14

FILE: bc-14.dgn	DN: TxDOT	CK: TxDOT	DW: TxDOT	CK: TxDOT
©TxDOT November 2002	CONT	SECT	JOB	HIGHWAY
REVISIONS 9-07 8-14 7-13	DIST	COUNTY		SHEET NO.

DISCLAIMER:
The use of this standard is governed by the "Texas Engineering Practice Act". No warranty of any kind is made by TxDOT for any purpose whatsoever. TxDOT assumes no responsibility for the conversion of this standard to other formats or for incorrect results or damages resulting from its use.

TYPICAL MINIMUM CLEARANCES FOR LONG TERM AND INTERMEDIATE TERM SIGNS

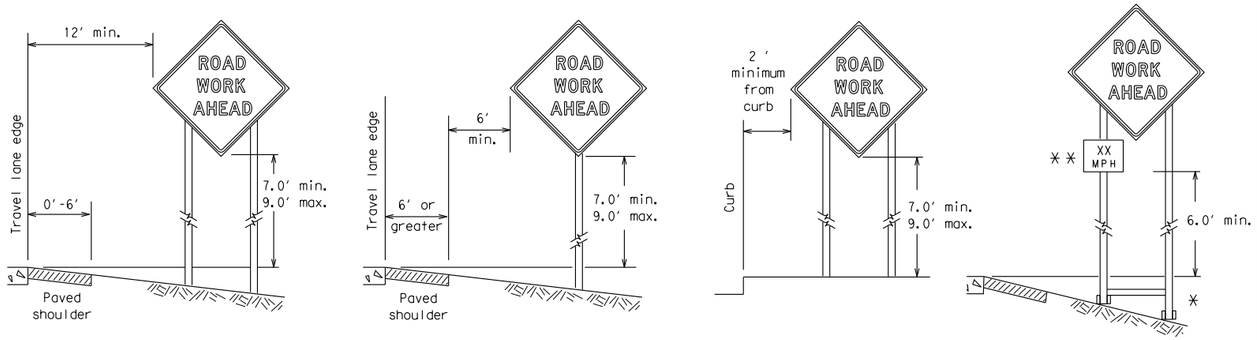

✳ When placing skid supports on unlevel ground, the leg post lengths must be adjusted so the sign appears straight and plumb. Objects shall NOT be placed under skids as a means of leveling.

✳✳ When plaques are placed on dual-leg supports, they should be attached to the upright nearest the travel lane. Supplemental plaques (advisory or distance) should not cover the surface of the parent sign.

ATTACHMENT FOR SIGN SUPPORTS

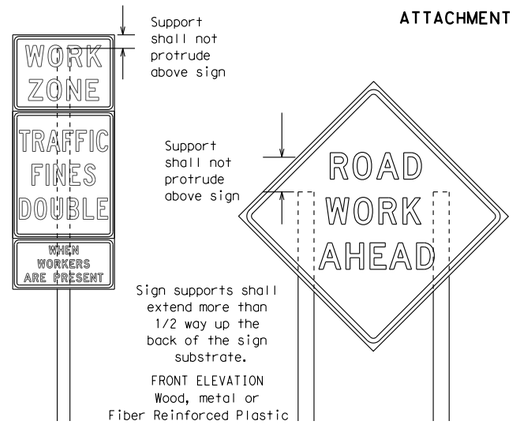

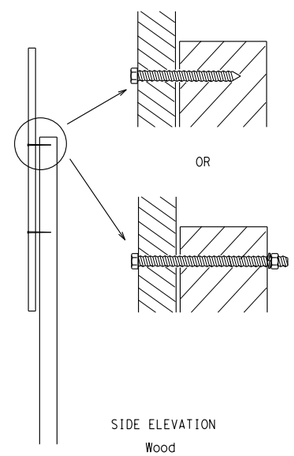

Attachment to wooden supports will be by bolts and nuts or screws. Use TxDOT's or manufacturer's recommended procedures for attaching sign substrates to other types of sign supports

Nails shall NOT be allowed. Each sign shall be attached directly to the sign support. Multiple signs shall not be joined or spliced by any means. Wood supports shall not be extended or repaired by splicing or other means.

Splicing embedded perforated square metal tubing in order to extend post height will only be allowed when the splice is made using four bolts, two above and two below the spice point. Splice must be located entirely behind the sign substrate, not near the base of the support. Splice insert lengths should be at least 5 times nominal post size, centered on the splice and of at least the same gauge material.

STOP/SLOW PADDLES

1. STOP/SLOW paddles are the primary method to control traffic by flaggers. The STOP/SLOW paddle size should be 24" x 24" as detailed below.
2. When used at night, the STOP/SLOW paddle shall be retroreflectorized.
3. STOP/SLOW paddles may be attached to a staff with a minimum length of 6′ to the bottom of the sign.
4. Any lights incorporated into the STOP or SLOW paddle faces shall only be as specifically described in Section 6E.03 Hand Signaling Devices in the TMUTCD.

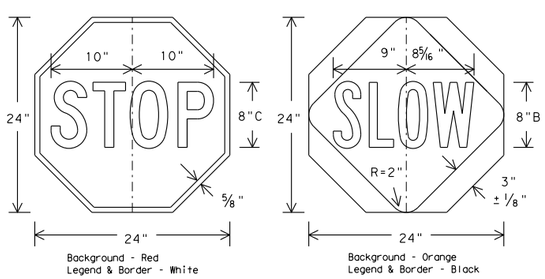

CONTRACTOR REQUIREMENTS FOR MAINTAINING PERMANENT SIGNS WITHIN THE PROJECT LIMITS

1. Permanent signs are used to give notice of traffic laws or regulations, call attention to conditions that are potentially hazardous to traffic operations, show route designations, destinations, directions, distances, services, points of interest, and other geographical, recreational, or cultural information. Drivers proceeding through a work zone need the same, if not better route guidance as normally installed on a roadway without construction.
2. When permanent regulatory or warning signs conflict with work zone conditions, remove or cover the permanent signs until the permanent sign message matches the roadway condition.
3. When existing permanent signs are moved and relocated due to construction purposes, they shall be visible to motorists at all times.
4. If existing signs are to be relocated on their original supports, they shall be installed on crashworthy bases as shown on the SMD Standard sheets. The signs shall meet the required mounting heights shown on the BC Sheets or the SMD Standards. This work should be paid for under the appropriate pay item for relocating existing signs.
5. If permanent signs are to be removed and relocated using temporary supports, the Contractor shall use crashworthy supports as shown on the BC sheets or the CWZTCD. The signs shall meet the required mounting heights shown on the BC Sheets or the SMD Standards during construction. This work should be paid for under the appropriate pay item for relocating existing signs.
6. Any sign or traffic control device that is struck or damaged by the Contractor or his/her construction equipment shall be replaced as soon as possible by the Contractor to ensure proper guidance for the motorists. This will be subsidiary to Item 502.

GENERAL NOTES FOR WORK ZONE SIGNS

1. Contractor shall install and maintain signs in a straight and plumb condition and/or as directed by the Engineer.
2. Wooden sign posts shall be painted white.
3. Barricades shall NOT be used as sign supports.
4. All signs shall be installed in accordance with the plans or as directed by the Engineer. Signs shall be used to regulate, warn, and guide the traveling public safely through the work zone.
5. The Contractor may furnish either the sign design shown in the plans or in the "Standard Highway Sign Designs for Texas" (SHSD). The Engineer/Inspector may require the Contractor to furnish other work zone signs that are shown in the TMUTCD but may have been omitted from the plans. Any variation in the plans shall be documented by written agreement between the Engineer and the Contractor's Responsible Person. All changes must be documented in writing before being implemented. This can include documenting the changes in the Inspector's TxDOT diary and having both the Inspector and Contractor initial and date the agreed upon changes.
6. The Contractor shall furnish sign supports listed in the "Compliant Work Zone Traffic Control Device List" (CWZTCD). The Contractor shall install the sign support in accordance with the manufacturer's recommendations. If there is a question regarding installation procedures, the Contractor shall furnish the Engineer a copy of the manufacturer's installation recommendations so the Engineer can verify the correct procedures are being followed.
7. The Contractor is responsible for installing signs on approved supports and replacing signs with damaged or cracked substrates and/or damaged or marred reflective sheeting as directed by the Engineer/Inspector.
8. Identification markings may be shown only on the back of the sign substrate. The maximum height of letters and/or company logos used for identification shall be 1 inch.
9. The Contractor shall replace damaged wood posts. New or damaged wood sign posts shall not be spliced.

DURATION OF WORK (as defined by the "Texas Manual on Uniform Traffic Control Devices" Part 6)

1. The types of sign supports, sign mounting height, the size of signs, and the type of sign substrates can vary based on the type of work being performed. The Engineer is responsible for selecting the appropriate size sign for the type of work being performed. The Contractor is responsible for ensuring the sign support, sign mounting height and substrate meets manufacturer's recommendations in regard to crashworthiness and duration of work requirements.
   a. Long-term stationary - work that occupies a location more than 3 days.
   b. Intermediate-term stationary - work that occupies a location more than one daylight period up to 3 days, or nighttime work lasting more than one hour.
   c. Short-term stationary - daytime work that occupies a location for more than 1 hour in a single daylight period.
   d. Short, duration - work that occupies a location up to 1 hour.
   e. Mobile - work that moves continuously or intermittently (stopping for up to approximately 15 minutes.)

SIGN MOUNTING HEIGHT

1. The bottom of Long-term/Intermediate-term signs shall be at least 7 feet, but not more than 9 feet, above the paved surface, except as shown for supplemental plaques mounted below other signs.
2. The bottom of Short-term/Short Duration signs shall be a minimum of 1 foot above the pavement surface but no more than 2 feet above the ground.
3. Long-term/Intermediate-term Signs may be used in lieu of Short-term/Short Duration signing.
4. Short-term/Short Duration signs shall be used only during daylight and shall be removed at the end of the workday or raised to appropriate Long-term/Intermediate sign height.
5. Regulatory signs shall be mounted at least 7 feet, but not more than 9 feet, above the paved surface regardless of work duration.

SIZE OF SIGNS

1. The Contractor shall furnish the sign sizes shown on BC (2) unless otherwise shown in the plans or as directed by the Engineer.

SIGN SUBSTRATES

1. The Contractor shall ensure the sign substrate is installed in accordance with the manufacturer's recommendations for the type of sign support that is being used. The CWZTCD lists each substrate that can be used on the different types and models of sign supports.
2. "Mesh" type materials are NOT an approved sign substrate, regardless of the tightness of the weave.
3. All wooden individual sign panels fabricated from 2 or more pieces shall have one or more plywood cleat, 1/2" thick by 6" wide, fastened to the back of the sign and extending fully across the sign. The cleat shall be attached to the back of the sign using wood screws that do not penetrate the face of the sign panel. The screws shall be placed on both sides of the splice and spaced at 6" centers. The Engineer may approve other methods of splicing the sign face.

REFLECTIVE SHEETING

1. All signs shall be retroreflective and constructed of sheeting meeting the color and retro-reflectivity requirements of DMS-8300 for rigid signs or DMS-8310 for roll-up signs. The web address for DMS specifications is shown on BC(1).
2. White sheeting, meeting the requirements of DMS-8300 Type A, shall be used for signs with a white background.
3. Orange sheeting, meeting the requirements of DMS-8300 Type B_{FL} or Type C_{FL}, shall be used for rigid signs with orange backgrounds.

SIGN LETTERS

1. All sign letters and numbers shall be clear, and open rounded type uppercase alphabet letters as approved by the Federal Highway Administration (FHWA) and as published in the "Standard Highway Sign Design for Texas" manual. Signs, letters and numbers shall be of first class workmanship in accordance with Department Standards and Specifications.

REMOVING OR COVERING

1. When sign messages may be confusing or do not apply, the signs shall be removed or completely covered.
2. Long-term stationary or intermediate stationary signs installed on square metal tubing may be turned away from traffic 90 degrees when the sign message is not applicable. This technique may not be used for signs installed in the median of divided highways or near any intersections where the sign may be seen from approaching traffic.
3. Signs installed on wooden skids shall not be turned at 90 degree angles to the roadway. These signs should be removed or completely covered when not required.
4. When signs are covered, the material used shall be opaque, such as heavy mil black plastic, or other materials which will cover the entire sign face and maintain their opaque properties under automobile headlights at night, without damaging the sign sheeting.
5. Burlap shall NOT be used to cover signs.
6. Duct tape or other adhesive material shall NOT be affixed to a sign face.
7. Signs and anchor stubs shall be removed and holes backfilled upon completion of work.

SIGN SUPPORT WEIGHTS

1. Where sign supports require the use of weights to keep from turning over, the use of sandbags with dry, cohesionless sand should be used.
2. The sandbags will be tied shut to keep the sand from spilling and to maintain a constant weight.
3. Rock, concrete, iron, steel or other solid objects shall not be permitted for use as sign support weights.
4. Sandbags should weigh a minimum of 35 lbs and a maximum of 50 lbs.
5. Sandbags shall be made of a durable material that tears upon vehicular impact. Rubber (such as tire inner tubes) shall NOT be used.
6. Rubber ballasts designed for channelizing devices should not be used for ballast on portable sign supports. Sign supports designed and manufactured with rubber bases may be used when shown on the CWZTCD list.
7. Sandbags shall only be placed along or laid over the base supports of the traffic control device and shall not be suspended above ground level or hung with rope, wire, chains or other fasteners. Sandbags shall be placed along the length of the skids to weigh down the sign support.
8. Sandbags shall NOT be placed under the skid and shall not be used to level sign supports placed on slopes.

FLAGS ON SIGNS

1. Flags may be used to draw attention to warning signs. When used the flag shall be 16 inches square or larger and shall be orange or fluorescent red-orange in color. Flags shall not be allowed to cover any portion of the sign face.

Texas Department of Transportation — Traffic Operations Division Standard

BARRICADE AND CONSTRUCTION TEMPORARY SIGN NOTES

BC(4)-14

FILE: bc-14.dgn	DN: TxDOT	CK: TxDOT	DW: TxDOT	CK: TxDOT
© TxDOT November 2002	CONT	SECT	JOB	HIGHWAY
REVISIONS 9-07 8-14 7-13	DIST		COUNTY	SHEET NO.

DATE:
FILE:

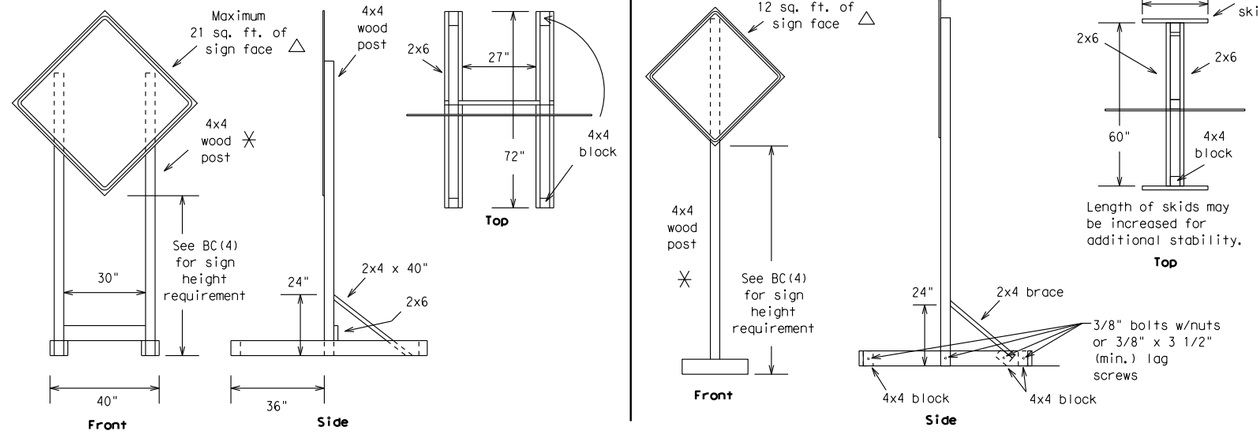

SKID MOUNTED WOOD SIGN SUPPORTS

LONG/INTERMEDIATE TERM STATIONARY - PORTABLE SKID MOUNTED SIGN SUPPORTS □

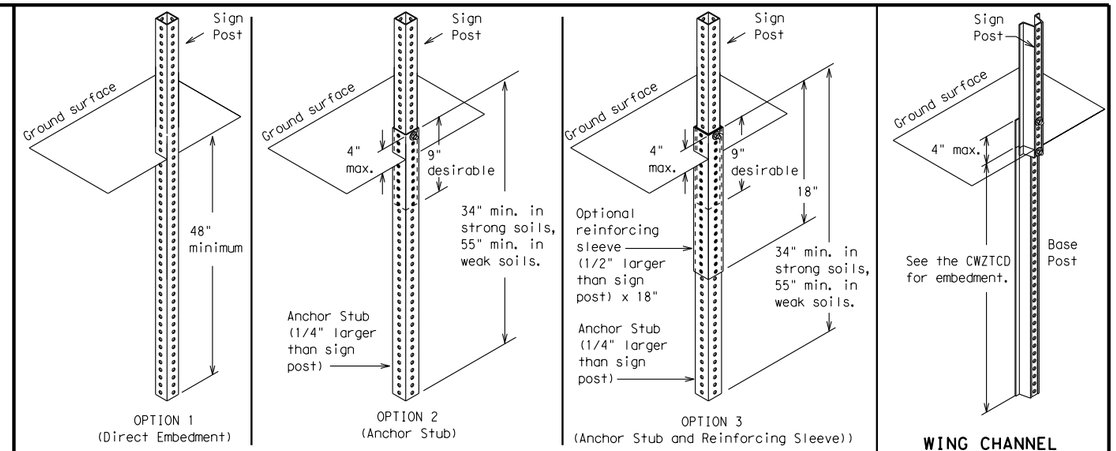

PERFORATED SQUARE METAL TUBING

WING CHANNEL
Lap-splice/base bolted anchor

GROUND MOUNTED SIGN SUPPORTS

Refer to the CWZTCD and the manufacturer's installation procedure for each type sign support.
The maximum sign square footage shall adhere to the manufacturer's recommendation.
Two post installations can be used for larger signs.

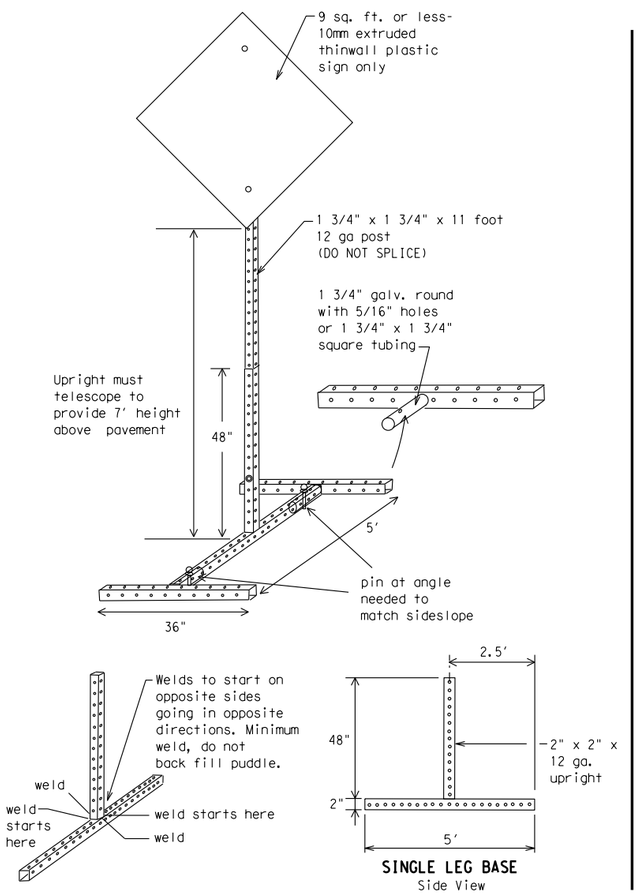

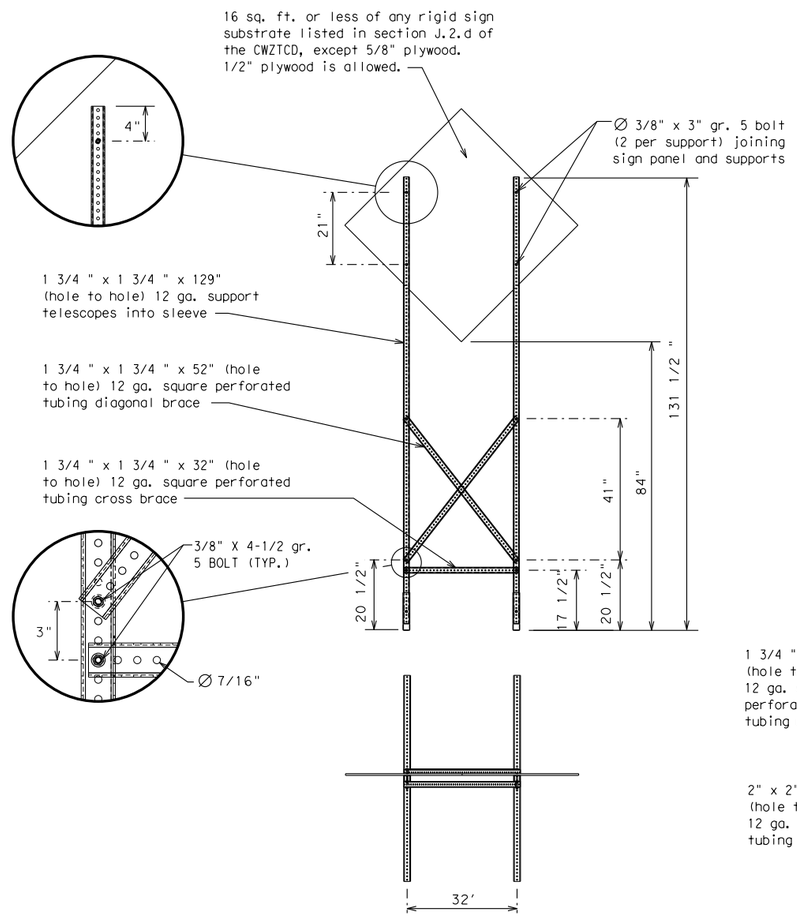

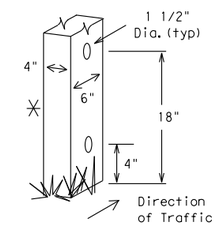

Nominal Post Size	Number of Posts	Maximum Sq. feet of Sign Face	Minimum Soil Embedment	Drilled Hole(s) Required
4 x 4	1	12	36"	NO
4 x 4	2	21	36"	NO
4 x 6	1	21	36"	YES
4 x 6	2	36	36"	YES

WOOD POST SYSTEM FOR GROUND MOUNTED SIGN SUPPORTS

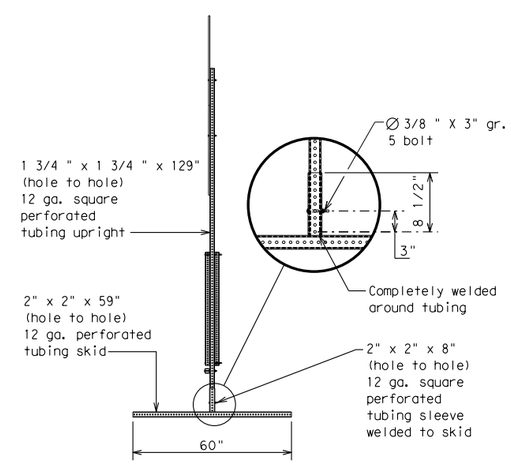

SKID MOUNTED PERFORATED SQUARE STEEL TUBING SIGN SUPPORTS

WEDGE ANCHORS

Both steel and plastic Wedge Anchor Systems as shown on the SMD Standard Sheets may be used as temporary sign supports for signs up to 10 square feet of sign face. They may be set in concrete or in sturdy soils if approved by the Engineer. (See web address for "Traffic Engineering Standard Sheets" on BC(1)).

OTHER DESIGNS

MORE DETAILS OF APPROVED LONG/INTERMEDIATE AND SHORT TERM SUPPORTS CAN BE FOUND ON THE CWZTCD LIST. SEE BC(1) FOR WEBSITE LOCATION.

GENERAL NOTES

1. Nails may be used in the assembly of wooden sign supports, but 3/8" bolts with nuts or 3/8" x 3 1/2" lag screws must be used on every joint for final connection.
2. No more than 2 sign posts shall be placed within a 7 ft. circle, except for specific materials noted on the CWZTCD List.
3. When project is completed, all sign supports and foundations shall be removed from the project site. This will be considered subsidiary to Item 502.

□ See BC(4) for definition of "Work Duration."

✳ Wood sign posts MUST be one piece. Splicing will NOT be allowed. Posts shall be painted white.

△ See the CWZTCD for the type of sign substrate that can be used for each approved sign support.

Texas Department of Transportation — Traffic Operations Division Standard

BARRICADE AND CONSTRUCTION TYPICAL SIGN SUPPORT

BC(5)-14

FILE: bc-14.dgn	DN: TxDOT	CK: TxDOT	DW: TxDOT	CK: TxDOT
© TxDOT November 2002	CONT	SECT	JOB	HIGHWAY
REVISIONS 9-07 8-14 7-13	DIST	COUNTY		SHEET NO.

DISCLAIMER:
The use of this standard is governed by the "Texas Engineering Practice Act". No warranty of any kind is made by TxDOT for any purpose whatsoever. TxDOT assumes no responsibility for the conversion of this standard to other formats or for incorrect results or damages resulting from its use.

DATE:
FILE:

WHEN NOT IN USE, REMOVE THE PCMS FROM THE RIGHT-OF-WAY OR PLACE THE PCMS BEHIND BARRIER OR GUARDRAIL WITH SIGN PANEL TURNED PARALLEL TO TRAFFIC

PORTABLE CHANGEABLE MESSAGE SIGNS

1. The Engineer/Inspector shall approve all messages used on portable changeable message signs (PCMS).
2. Messages on PCMS should contain no more than 8 words (about four to eight characters per word), not including simple words such as "TO," "FOR," "AT," etc.
3. Messages should consist of a single phase, or two phases that alternate. Three-phase messages are not allowed. Each phase of the message should convey a single thought, and must be understood by itself.
4. Use the word "EXIT" to refer to an exit ramp on a freeway; i.e., "EXIT CLOSED." Do not use the term "RAMP."
5. Always use the route or interstate designation (IH, US, SH, FM) along with the number when referring to a roadway.
6. When in use the bottom of a stationary PCMS message panel should be a minimum 7 feet above the roadway, where possible.
7. The message term "WEEKEND" should be used only if the work is to start on Saturday morning and end by Sunday evening at midnight. Actual days and hours of work should be displayed on the PCMS if work is to begin on Friday evening and/or continue into Monday morning.
8. The Engineer/Inspector may select one of two options which are available for displaying a two-phase message on a PCMS. Each phase may be displayed for either four seconds each or for three seconds each.
9. Do not "flash" messages or words included in a message. The message should be steady burn or continuous while displayed.
10. Do not present redundant information on a two-phase message; i.e., keeping two lines of the message the same and changing the third line.
11. Do not use the word "Danger" in message.
12. Do not display the message "LANES SHIFT LEFT" or "LANES SHIFT RIGHT" on a PCMS. Drivers do not understand the message.
13. Do not display messages that scroll horizontally or vertically across the face of the sign.
14. The following table lists abbreviated words and two-word phrases that are acceptable for use on a PCMS. Both words in a phrase must be displayed together. Words or phrases not on this list should not be abbreviated, unless shown in the TMUTCD.
15. PCMS character height should be at least 18 inches for trailer mounted units. They should be visible from at least 1/2 (.5) mile and the text should be legible from at least 600 feet at night and 800 feet in daylight. Truck mounted units must have a character height of 10 inches and must be legible from at least 400 feet.
16. Each line of text should be centered on the message board rather than left or right justified.
17. If disabled, the PCMS should default to an illegible display that will not alarm motorists and will only be used to alert workers that the PCMS has malfunctioned. A pattern such as a series of horizontal solid bars is appropriate.

WORD OR PHRASE	ABBREVIATION
Access Road	ACCS RD
Alternate	ALT
Avenue	AVE
Best Route	BEST RTE
Boulevard	BLVD
Bridge	BRDG
Cannot	CANT
Center	CTR
Construction Ahead	CONST AHD
CROSSING	XING
Detour Route	DETOUR RTE
Do Not	DONT
East	E
Eastbound	(route) E
Emergency	EMER
Emergency Vehicle	EMER VEH
Entrance, Enter	ENT
Express Lane	EXP LN
Expressway	EXPWY
XXXX Feet	XXXX FT
Fog Ahead	FOG AHD
Freeway	FRWY, FWY
Freeway Blocked	FWY BLKD
Friday	FRI
Hazardous Driving	HAZ DRIVING
Hazardous Material	HAZMAT
High-Occupancy	HOV
Vehicle Highway	HWY
Hour(s)	HR, HRS
Information	INFO
It Is	ITS
Junction	JCT
Left	LFT
Left Lane	LFT LN
Lane Closed	LN CLOSED
Lower Level	LWR LEVEL
Maintenance	MAINT

WORD OR PHRASE	ABBREVIATION
Major	MAJ
Miles	MI
Miles Per Hour	MPH
Minor	MNR
Monday	MON
Normal	NORM
North	N
Northbound	(route) N
Parking	PKING
Road	RD
Right Lane	RT LN
Saturday	SAT
Service Road	SERV RD
Shoulder	SHLDR
Slippery	SLIP
South	S
Southbound	(route) S
Speed	SPD
Street	ST
Sunday	SUN
Telephone	PHONE
Temporary	TEMP
Thursday	THURS
To Downtown	TO DWNTN
Traffic	TRAF
Travelers	TRVLRS
Tuesday	TUES
Time Minutes	TIME MIN
Upper Level	UPR LEVEL
Vehicles (s)	VEH, VEHS
Warning	WARN
Wednesday	WED
Weight Limit	WT LIMIT
West	W
Westbound	(route) W
Wet Pavement	WET PVMT
Will Not	WONT

Roadway designation # IH-number, US-number, SH-number, FM-number

RECOMMENDED PHASES AND FORMATS FOR PCMS MESSAGES DURING ROADWORK ACTIVITIES

(The Engineer may approve other messages not specifically covered here.)

Phase 1: Condition Lists

Road/Lane/Ramp Closure List

FREEWAY CLOSED X MILE	FRONTAGE ROAD CLOSED
ROAD CLOSED AT SH XXX	SHOULDER CLOSED XXX FT
ROAD CLSD AT FM XXXX	RIGHT LN CLOSED XXX FT
RIGHT X LANES CLOSED	RIGHT X LANES OPEN
CENTER LANE CLOSED	DAYTIME LANE CLOSURES
NIGHT LANE CLOSURES	I-XX SOUTH EXIT CLOSED
VARIOUS LANES CLOSED	EXIT XXX CLOSED X MILE
EXIT CLOSED	RIGHT LN TO BE CLOSED
MALL DRIVEWAY CLOSED	X LANES CLOSED TUE - FRI
XXXXXXXX BLVD CLOSED	

Other Condition List

ROADWORK XXX FT	ROAD REPAIRS XXXX FT
FLAGGER XXXX FT	LANE NARROWS XXXX FT
RIGHT LN NARROWS XXXX FT	TWO-WAY TRAFFIC XX MILE
MERGING TRAFFIC XXXX FT	CONST TRAFFIC XXX FT
LOOSE GRAVEL XXXX FT	UNEVEN LANES XXXX FT
DETOUR X MILE	ROUGH ROAD XXXX FT
ROADWORK PAST SH XXXX	ROADWORK NEXT FRI-SUN
BUMP XXXX FT	US XXX EXIT X MILES
TRAFFIC SIGNAL XXXX FT	LANES SHIFT *

* LANES SHIFT in Phase 1 must be used with STAY IN LANE in Phase 2.

Phase 2: Possible Component Lists

Action to Take/Effect on Travel List

MERGE RIGHT	FORM X LINES RIGHT
DETOUR NEXT X EXITS	USE XXXXX RD EXIT
USE EXIT XXX	USE EXIT I-XX NORTH
STAY ON US XXX SOUTH	USE I-XX E TO I-XX N
TRUCKS USE US XXX N	WATCH FOR TRUCKS
WATCH FOR TRUCKS	EXPECT DELAYS
EXPECT DELAYS	PREPARE TO STOP
REDUCE SPEED XXX FT	END SHOULDER USE
USE OTHER ROUTES	WATCH FOR WORKERS
STAY IN LANE *	

Location List

AT FM XXXX

BEFORE RAILROAD CROSSING

NEXT X MILES

PAST US XXX EXIT

XXXXXXX TO XXXXXXX

US XXX TO FM XXXX

Warning List

SPEED LIMIT XX MPH

MAXIMUM SPEED XX MPH

MINIMUM SPEED XX MPH

ADVISORY SPEED XX MPH

RIGHT LANE EXIT

USE CAUTION

DRIVE SAFELY

DRIVE WITH CARE

** Advance Notice List

TUE-FRI XX AM- X PM

APR XX- XX X PM-X AM

BEGINS MONDAY

BEGINS MAY XX

MAY X-X XX PM - XX AM

NEXT FRI-SUN

XX AM TO XX PM

NEXT TUE AUG XX

TONIGHT XX PM- XX AM

** See Application Guidelines Note 6.

APPLICATION GUIDELINES

1. Only 1 or 2 phases are to be used on a PCMS.
2. The 1st phase (or both) should be selected from the "Road/Lane/Ramp Closure List" and the "Other Condition List".
3. A 2nd phase can be selected from the "Action to Take/Effect on Travel, Location, General Warning, or Advance Notice Phase Lists".
4. A Location Phase is necessary only if a distance or location is not included in the first phase selected.
5. If two PCMS are used in sequence, they must be separated by a minimum of 1000 ft. Each PCMS shall be limited to two phases, and should be understandable by themselves.
6. For advance notice, when the current date is within seven days of the actual work date, calendar days should be replaced with days of the week. Advance notification should typically be for no more than one week prior to the work.

WORDING ALTERNATIVES

1. The words RIGHT, LEFT and ALL can be interchanged as appropriate.
2. Roadway designations IH, US, SH, FM and LP can be interchanged as appropriate.
3. EAST, WEST, NORTH and SOUTH (or abbreviations E, W, N and S) can be interchanged as appropriate.
4. Highway names and numbers replaced as appropriate.
5. ROAD, HIGHWAY and FREEWAY can be interchanged as needed.
6. AHEAD may be used instead of distances if necessary.
7. FT and MI, MILE and MILES interchanged as appropriate.
8. AT, BEFORE and PAST interchanged as needed.
9. Distances or AHEAD can be eliminated from the message if a location phase is used.

PCMS SIGNS WITHIN THE R.O.W. SHALL BE BEHIND GUARDRAIL OR CONCRETE BARRIER OR SHALL HAVE A MINIMUM OF FOUR (4) PLASTIC DRUMS PLACED PERPENDICULAR TO TRAFFIC ON THE UPSTREAM SIDE OF THE PCMS, WHEN EXPOSED TO ONE DIRECTION OF TRAFFIC. WHEN EXPOSED TO TWO WAY TRAFFIC, THE FOUR DRUMS SHOULD BE PLACED WITH ONE DRUM AT EACH OF THE FOUR CORNERS OF THE UNIT.

FULL MATRIX PCMS SIGNS

1. When Full Matrix PCMS signs are used, the character height and legibility/visibility requirements shall be maintained as listed in Note 15 under "PORTABLE CHANGEABLE MESSAGE SIGNS" above.
2. When symbol signs, such as the "Flagger Symbol"(CW20-7) are represented graphically on the Full Matrix PCMS sign and, with the approval of the Engineer, it shall maintain the legibility/visibility requirement listed above.
3. When symbol signs are represented graphically on the Full Matrix PCMS, they shall only supplement the use of the static sign represented, and shall not substitute for, or replace that sign.
4. A full matrix PCMS may be used to simulate a flashing arrow board provided it meets the visibility, flash rate and dimming requirements on BC(7), for the same size arrow.

DISCLAIMER:
The use of this standard is governed by the "Texas Engineering Practice Act". No warranty of any kind is made by TxDOT for any purpose whatsoever. TxDOT assumes no responsibility for the conversion of this standard to other formats or for incorrect results or damages resulting from its use.

DATE:
FILE:

Texas Department of Transportation — Traffic Operations Division Standard

BARRICADE AND CONSTRUCTION PORTABLE CHANGEABLE MESSAGE SIGN (PCMS)

BC(6)-14

FILE: bc-14.dgn	DN: TxDOT	CK: TxDOT	DW: TxDOT	CK: TxDOT
© TxDOT November 2002	CONT	SECT	JOB	HIGHWAY
REVISIONS 9-07 8-14 7-13	DIST		COUNTY	SHEET NO.

100

DISCLAIMER:
The use of this standard is governed by the "Texas Engineering Practice Act". No warranty of any kind is made by TxDOT for any purpose whatsoever. TxDOT assumes no responsibility for the conversion of this standard to other formats or for incorrect results or damages resulting from its use.

1. Barrier Reflectors shall be pre-qualified, and conform to the color and reflectivity requirements of DMS-8600. A list of prequalified Barrier Reflectors can be found at the Material Producer List web address shown on BC(1).
2. Color of Barrier Reflectors shall be as specified in the TMUTCD. The cost of the reflectors shall be considered subsidiary to Item 512.

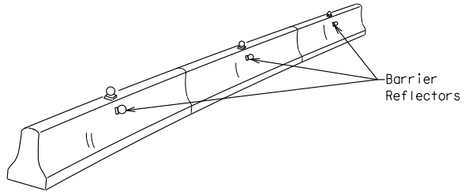

CONCRETE TRAFFIC BARRIER (CTB)

3. Where traffic is on one side of the CTB, two (2) Barrier Reflectors shall be mounted in approximately the midsection of each section of CTB. An alternate mounting location is uniformly spaced at one end of each CTB. This will allow for attachment of a barrier grapple without damaging the reflector. The Barrier Reflector mounted on the side of the CTB shall be located directly below the reflector mounted on top of the barrier, as shown in the detail above.
4. Where CTB separates two-way traffic, three barrier reflectors shall be mounted on each section of CTB. The reflector unit on top shall have two yellow reflective faces (Bi-Directional)while the reflectors on each side of the barrier shall have one yellow reflective face, as shown in the detail above.
5. When CTB separates traffic traveling in the same direction, no barrier reflectors will be required on top of the CTB.
6. Barrier Reflector units shall be yellow or white in color to match the edgeline being supplemented.
7. Maximum spacing of Barrier Reflectors is forty (40) feet.
8. Pavement markers or temporary flexible-reflective roadway marker tabs shall NOT be used as CTB delineation.
9. Attachment of Barrier Reflectors to CTB shall be per manufacturer's recommendations.
10. Missing or damaged Barrier Reflectors shall be replaced as directed by the Engineer.
11. Single slope barriers shall be delineated as shown on the above detail.

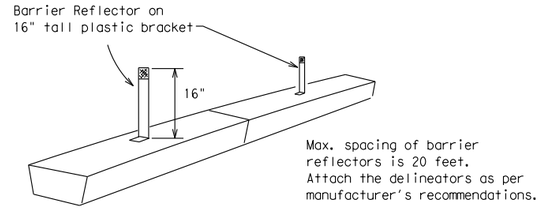

LOW PROFILE CONCRETE BARRIER (LPCB)

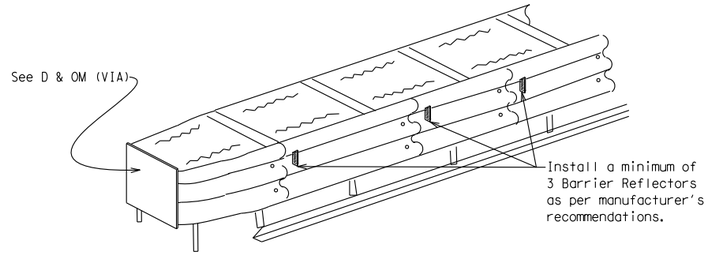

DELINEATION OF END TREATMENTS

END TREATMENTS FOR CTB'S USED IN WORK ZONES

End treatments used on CTB's in work zones shall meet crashworthy standards as defined in the National Cooperative Highway Research Report 350. Refer to the CWZTCD List for approved end treatments and manufacturers.

BARRIER REFLECTORS FOR CONCRETE TRAFFIC BARRIER AND ATTENUATORS

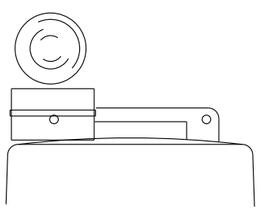

Type C Warning Light or approved substitute mounted on a drum adjacent to the travel way.

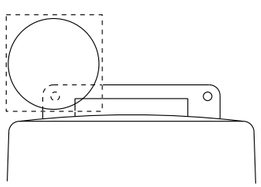

Warning reflector may be round or square.Must have a yellow reflective surface area of at least 30 square inches

WARNING LIGHTS

1. Warning lights shall meet the requirements of the TMUTCD.
2. Warning lights shall NOT be installed on barricades.
3. Type A-Low Intensity Flashing Warning Lights are commonly used with drums. They are intended to warn of or mark a potentially hazardous area. Their use shall be as indicated on this sheet and/or other sheets of the plans by the designation "FL". The Type A Warning Lights shall not be used with signs manufactured with Type B_{FL} or C_{FL} Sheeting meeting the requirements of Departmental Material Specification DMS-8300.
4. Type-C and Type D 360 degree Steady Burn Lights are intended to be used in a series for delineation to supplement other traffic control devices. Their use shall be as indicated on this sheet and/or other sheets of the plans by the designation "SB".
5. The Engineer/Inspector or the plans shall specify the location and type of warning lights to be installed on the traffic control devices.
6. When required by the Engineer, the Contractor shall furnish a copy of the warning lights certification. The warning light manufacturer will certify the warning lights meet the requirements of the latest ITE Purchase Specifications for Flashing and Steady-Burn Warning Lights.
7. When used to delineate curves, Type-C and Type D Steady Burn Lights should only be placed on the outside of the curve, not the inside.
8. The location of warning lights and warning reflectors on drums shall be as shown elsewhere in the plans.

WARNING LIGHTS MOUNTED ON PLASTIC DRUMS

1. Type A flashing warning lights are intended to warn drivers that they are approaching or are in a potentially hazardous area.
2. Type A random flashing warning lights are not intended for delineation and shall not be used in a series.
3. A series of sequential flashing warning lights placed on channelizing devices to form a merging taper may be used for delineation. If used, the successive flashing of the sequential warning lights should occur from the beginning of the taper to the end of the merging taper in order to identify the desired vehicle path. The rate of flashing for each light shall be 65 flashes per minute, plus or minus 10 flashes.
4. Type C and D steady-burn warning lights are intended to be used in a series to delineate the edge of the travel lane on detours, on lane changes, on lane closures, and on other similar conditions.
5. Type A, Type C and Type D warning lights shall be installed at locations as detailed on other sheets in the plans.
6. Warning lights shall not be installed on a drum that has a sign, chevron or vertical panel.
7. The maximum spacing for warning lights on drums should be identical to the channelizing device spacing.

WARNING REFLECTORS MOUNTED ON PLASTIC DRUMS AS A SUBSTITUTE FOR TYPE C (STEADY BURN) WARNING LIGHTS

1. A warning reflector or approved substitute may be mounted on a plastic drum as a substitute for a Type C, steady burn warning light at the discretion of the Contractor unless otherwise noted in the plans.
2. The warning reflector shall be yellow in color and shall be manufactured using a sign substrate approved for use with plastic drums listed on the CWZTCD.
3. The warning reflector shall have a minimum retroreflective surface area (one-side) of 30 square inches.
4. Round reflectors shall be fully reflectorized, including the area where attached to the drum.
5. Square substrates must have a minimum of 30 square inches of reflectorized sheeting. They do not have to be reflectorized where it attaches to the drum.
6. The side of the warning reflector facing approaching traffic shall have sheeting meeting the color and retroreflectivity requirements for DMS 8300-Type B or Type C.
7. When used near two-way traffic, both sides of the warning reflector shall be reflectorized.
8. The warning reflector should be mounted on the side of the handle nearest approaching traffic.
9. The maximum spacing for warning reflectors should be identical to the channelizing device spacing requirements.

Arrow Boards may be located behind channelizing devices in place for a shoulder taper or merging taper, otherwise they shall be delineated with four (4) channelizing devices placed perpendicular to traffic on the upstream side of traffic.

1. The Flashing Arrow Board should be used for all lane closures on multi-lane roadways, or slow moving maintenance or construction activities on the travel lanes.
2. Flashing Arrow Boards should not be used on two-lane, two-way roadways, detours, diversions or work on shoulders unless the "CAUTION" display (see detail below) is used.
3. The Engineer/Inspector shall choose all appropriate signs, barricades and/or other traffic control devices that should be used in conjunction with the Flashing Arrow Board.
4. The Flashing Arrow Board should be able to display the following symbols:

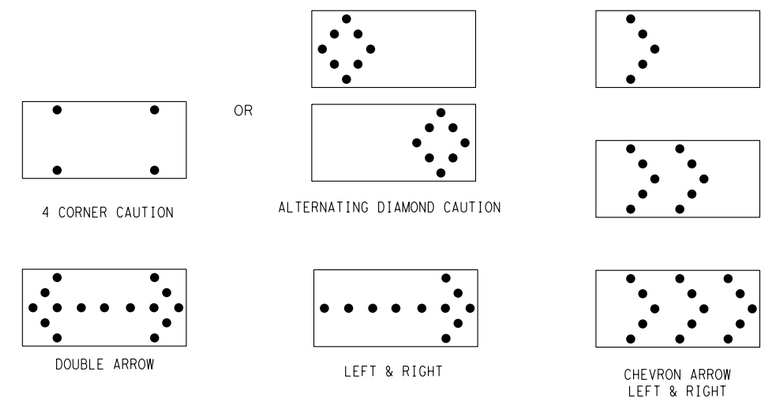

5. The "CAUTION" display consists of four corner lamps flashing simultaneously, or the Alternating Diamond Caution mode as shown.
6. The straight line caution display is NOT ALLOWED.
7. The Flashing Arrow Board shall be capable of minimum 50 percent dimming from rated lamp voltage. The flashing rate of the lamps shall not be less than 25 nor more than 40 flashes per minute.
8. Minimum lamp "on time" shall be approximately 50 percent for the flashing arrow and equal intervals of 25 percent for each sequential phase of the flashing chevron.
9. The sequential arrow display is NOT ALLOWED.
10. The flashing arrow display is the TxDOT standard; however, the sequential Chevron display may be used during daylight operations.
11. The Flashing Arrow Board shall be mounted on a vehicle, trailer or other suitable support.
12. A Flashing Arrow Board SHALL NOT BE USED to laterally shift traffic.
13. A full matrix PCMS may be used to simulate a Flashing Arrow Board provided it meets visibility, flash rate and dimming requirements on this sheet for the same size arrow.
14. Minimum mounting height of trailer mounted Arrow Boards should be 7 feet from roadway to bottom of panel.

REQUIREMENTS

TYPE	MINIMUM SIZE	MINIMUM NUMBER OF PANEL LAMPS	MINIMUM VISIBILITY DISTANCE
B	30 x 60	13	3/4 mile
C	48 x 96	15	1 mile

ATTENTION

Flashing Arrow Boards shall be equipped with automatic dimming devices.

WHEN NOT IN USE, REMOVE THE ARROW BOARD FROM THE RIGHT-OF-WAY OR PLACE THE ARROW BOARD BEHIND CONCRETE TRAFFIC BARRIER OR GUARDRAIL.

FLASHING ARROW BOARDS

TRUCK-MOUNTED ATTENUATORS

1. Truck-mounted attenuators (TMA) used on TxDOT facilities must meet the requirements outlined in the National Cooperative Highway Research Report No. 350 (NCHRP 350) or the Manual for Assessing Safety Hardware (MASH).
2. Refer to the CWZTCD for the requirements of Level 2 or Level 3 TMAs.
3. Refer to the CWZTCD for a list of approved TMAs.
4. TMAs are required on freeways unless otherwise noted in the plans.
5. A TMA should be used anytime that it can be positioned 30 to 100 feet in advance of the area of crew exposure without adversely affecting the work performance.
6. The only reason a TMA should not be required is when a work area is spread down the roadway and the work crew is an extended distance from the TMA.

Texas Department of Transportation — Traffic Operations Division Standard

BARRICADE AND CONSTRUCTION ARROW PANEL, REFLECTORS, WARNING LIGHTS & ATTENUATOR

BC(7)-14

FILE: bc-14.dgn	DN: TxDOT	CK: TxDOT	DW: TxDOT	CK: TxDOT
© TxDOT November 2002	CONT	SECT	JOB	HIGHWAY
REVISIONS 9-07 8-14 7-13	DIST		COUNTY	SHEET NO.

101

DATE:
FILE:

DISCLAIMER:
The use of this standard is governed by the "Texas Engineering Practice Act". No warranty of any kind is made by TxDOT for any purpose whatsoever. TxDOT assumes no responsibility for the conversion of this standard to other formats or for incorrect results or damages resulting from its use.

DATE:
FILE:

GENERAL NOTES

1. For long term stationary work zones on freeways, drums shall be used as the primary channelizing device.
2. For intermediate term stationary work zones on freeways, drums should be used as the primary channelizing device but may be replaced in tangent sections by vertical panels, or 42" two-piece cones. In tangent sections one-piece cones may be used with the approval of the Engineer but only if personnel are present on the project at all times to maintain the cones in proper position and location.
3. For short term stationary work zones on freeways, drums are the preferred channelizing device but may be replaced in tapers, transitions and tangent sections by vertical panels, two-piece cones or one-piece cones as approved by the Engineer.
4. Drums and all related items shall comply with the requirements of the current version of the "Texas Manual on Uniform Traffic Control Devices" (TMUTCD) and the "Compliant Work Zone Traffic Control Devices List" (CWZTCD).
5. Drums, bases, and related materials shall exhibit good workmanship and shall be free from objectionable marks or defects that would adversely affect their appearance or serviceability.
6. The Contractor shall have a maximum of 24 hours to replace any plastic drums identified for replacement by the Engineer/Inspector. The replacement device must be an approved device.

GENERAL DESIGN REQUIREMENTS

Pre-qualified plastic drums shall meet the following requirements:

1. Plastic drums shall be a two-piece design; the "body" of the drum shall be the top portion and the "base" shall be the bottom.
2. The body and base shall lock together in such a manner that the body separates from the base when impacted by a vehicle traveling at a speed of 20 MPH or greater but prevents accidental separation due to normal handling and/or air turbulence created by passing vehicles.
3. Plastic drums shall be constructed of lightweight flexible, and deformable materials. The Contractor shall NOT use metal drums or single piece plastic drums as channelization devices or sign supports.
4. Drums shall present a profile that is a minimum of 18 inches in width at the 36 inch height when viewed from any direction. The height of drum unit (body installed on base) shall be a minimum of 36 inches and a maximum of 42 inches.
5. The top of the drum shall have a built-in handle for easy pickup and shall be designed to drain water and not collect debris. The handle shall have a minimum of two widely spaced 9/16 inch diameter holes to allow attachment of a warning light, warning reflector unit or approved compliant sign.
6. The exterior of the drum body shall have a minimum of four alternating orange and white retroreflective circumferential stripes not less than 4 inches nor greater than 8 inches in width. Any non-reflectorized space between any two adjacent stripes shall not exceed 2 inches in width.
7. Bases shall have a maximum width of 36 inches, a maximum height of 4 inches, and a minimum of two footholds of sufficient size to allow base to be held down while separating the drum body from the base.
8. Plastic drums shall be constructed of ultra-violet stabilized, orange, high-density polyethylene (HDPE) or other approved material.
9. Drum body shall have a maximum unballasted weight of 11 lbs.
10. Drum and base shall be marked with manufacturer's name and model number.

RETROREFLECTIVE SHEETING

1. The stripes used on drums shall be constructed of sheeting meeting the color and retroreflectivity requirements of Departmental Materials Specification DMS-8300, "Sign Face Materials." Type A reflective sheeting shall be supplied unless otherwise specified in the plans.
2. The sheeting shall be suitable for use on and shall adhere to the drum surface such that, upon vehicular impact, the sheeting shall remain adhered in-place and exhibit no delaminating, cracking, or loss of retroreflectivity other than that loss due to abrasion of the sheeting surface.

BALLAST

1. Unballasted bases shall be large enough to hold up to 50 lbs. of sand. This base, when filled with the ballast material, should weigh between 35 lbs (minimum) and 50 lbs (maximum). The ballast may be sand in one to three sandbags separate from the base, sand in a sand-filled plastic base, or other ballasting devices as approved by the Engineer. Stacking of sandbags will be allowed, however height of sandbags above pavement surface may not exceed 12 inches.
2. Bases with built-in ballast shall weigh between 40 lbs. and 50 lbs. Built-in ballast can be constructed of an integral crumb rubber base or a solid rubber base.
3. Recycled truck tire sidewalls may be used for ballast on drums approved for this type of ballast on the CWZTCD list.
4. The ballast shall not be heavy objects, water, or any material that would become hazardous to motorists, pedestrians, or workers when the drum is struck by a vehicle.
5. When used in regions susceptible to freezing, drums shall have drainage holes in the bottoms so that water will not collect and freeze becoming a hazard when struck by a vehicle.
6. Ballast shall not be placed on top of drums.
7. Adhesives may be used to secure base of drums to pavement.

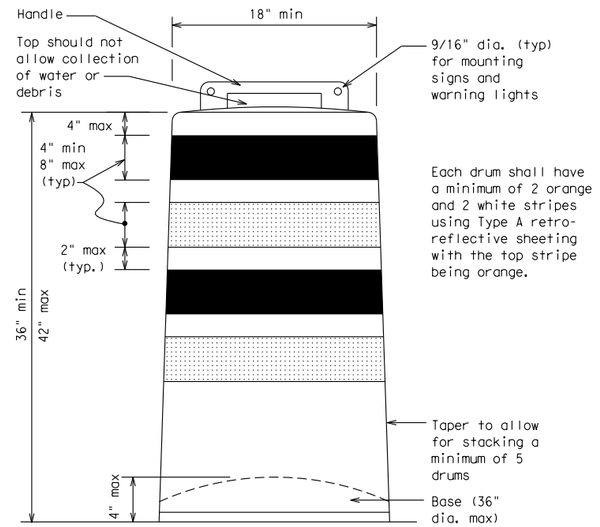

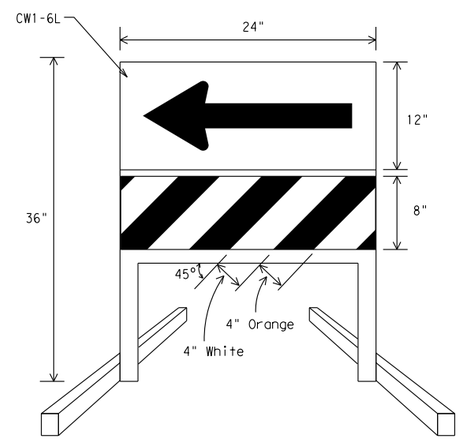

DIRECTION INDICATOR BARRICADE

1. The Direction Indicator Barricade may be used in tapers, transitions, and other areas where specific directional guidance to drivers is necessary.
2. If used, the Direction Indicator Barricade should be used in series to direct the driver through the transition and into the intended travel lane.
3. The Direction Indicator Barricade shall consist of One-Direction Large Arrow (CW1-6) sign in the size shown with a black arrow on a background of Type B_{FL} or Type C_{FL} Orange retroreflective sheeting above a rail with Type A retroreflective sheeting in alternating 4" white and orange stripes sloping downward at an angle of 45 degrees in the direction road users are to pass. Sheeting types shall be as per DMS 8300.
4. Double arrows on the Direction Indicator Barricade will not be allowed.
5. Approved manufacturers are shown on the CWZTCD List. Ballast shall be as approved by the manufacturers instructions.

This detail is not intended for fabrication. See note 3 and the CWZTCD list for providers of approved Detectable Pedestrian Barricades

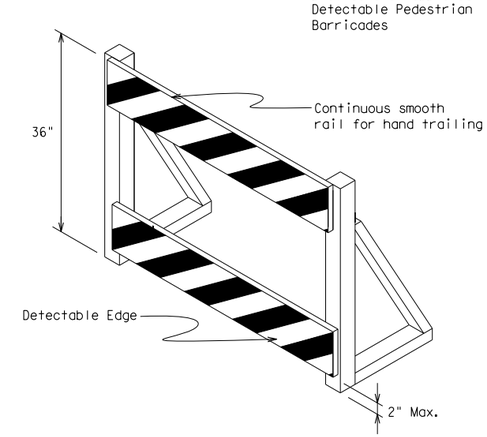

DETECTABLE PEDESTRIAN BARRICADES

1. When existing pedestrian facilities are disrupted, closed, or relocated in a TTC zone, the temporary facilities shall be detectable and include accessibility features consistent with the features present in the existing pedestrian facility.
2. Where pedestrians with visual disabilities normally use the closed sidewalk, a device that is detectable by a person with a visual disability traveling with the aid of a long cane shall be placed across the full width of the closed sidewalk.
3. Detectable pedestrian barricades similar to the one pictured above, longitudinal channelizing devices, some concrete barriers, and wood or chain link fencing with a continuous detectable edging can satisfactorily delineate a pedestrian path.
4. Tape, rope, or plastic chain strung between devices are not detectable, do not comply with the design standards in the "Americans with Disabilities Act Accessibility Guidelines for Buildings and Facilities (ADAAG)" and should not be used as a control for pedestrian movements.
5. Warning lights shall not be attached to detectable pedestrian barricades.
6. Detectable pedestrian barricades may use 8" nominal barricade rails as shown on BC(10) provided that the top rail provides a smooth continuous rail suitable for hand trailing with no splinters, burrs, or sharp edges.

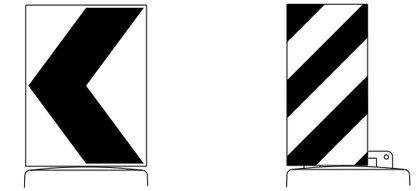

18" x 24" Sign
(Maximum Sign Dimension)
Chevron CW1-8, Opposing Traffic Lane Divider, Driveway sign D70a, Keep Right R4 series or other signs as approved by Engineer

12" x 24"
Vertical Panel
mount with diagonals sloping down towards travel way

Plywood, Aluminum or Metal sign substrates shall NOT be used on plastic drums

SIGNS, CHEVRONS, AND VERTICAL PANELS MOUNTED ON PLASTIC DRUMS

1. Signs used on plastic drums shall be manufactured using substrates listed on the CWZTCD.
2. Chevrons and other work zone signs with an orange background shall be manufactured with Type B_{FL} or Type C_{FL} Orange sheeting meeting the color and retroreflectivity requirements of DMS-8300, "Sign Face Material," unless otherwise specified in the plans.
3. Vertical Panels shall be manufactured with orange and white sheeting meeting the requirements of DMS-8300 Type A Diagonal stripes on Vertical Panels shall slope down toward the intended traveled lane.
4. Other sign messages (text or symbolic) may be used as approved by the Engineer. Sign dimensions shall not exceed 18 inches in width or 24 inches in height, except for the R9 series signs discussed in note 8 below.
5. Signs shall be installed using a 1/2 inch bolt (nominal) and nut, two washers, and one locking washer for each connection.
6. Mounting bolts and nuts shall be fully engaged and adequately torqued. Bolts should not extend more than 1/2 inch beyond nuts.
7. Chevrons may be placed on drums on the outside of curves, on merging tapers or on shifting tapers. When used in these locations they may be placed on every drum or spaced not more than on every third drum. A minimum of three (3) should be used at each location called for in the plans.
8. R9-9, R9-10, R9-11 and R9-11a Sidewalk Closed signs which are 24 inches wide may be mounted on plastic drums, with approval of the Engineer.

Texas Department of Transportation

Traffic Operations Division Standard

BARRICADE AND CONSTRUCTION CHANNELIZING DEVICES

BC(8)-14

FILE: bc-14.dgn	DN: TxDOT	CK: TxDOT	DW: TxDOT	CK: TxDOT
© TxDOT November 2002	CONT	SECT	JOB	HIGHWAY
REVISIONS				
4-03 7-13	DIST		COUNTY	SHEET NO.
9-07 8-14				

DISCLAIMER:
The use of this standard is governed by the "Texas Engineering Practice Act". No warranty of any kind is made by TxDOT for any purpose whatsoever. TxDOT assumes no responsibility for the conversion of this standard to other formats or for incorrect results or damages resulting from its use.

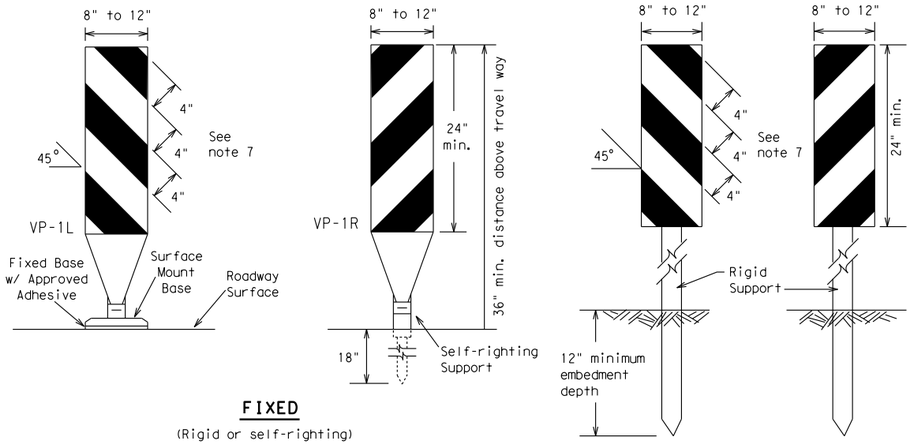

FIXED

(Rigid or self-righting)

DRIVEABLE

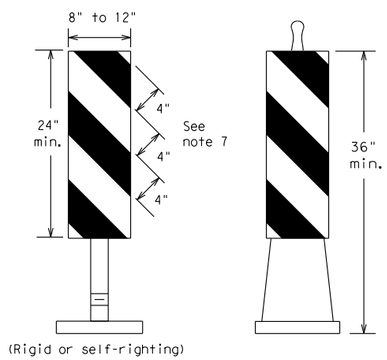

(Rigid or self-righting)

PORTABLE

1. Vertical Panels (VP's) are normally used to channelize traffic or divide opposing lanes of traffic.
2. VP's may be used in daytime or nighttime situations. They may be used at the edge of shoulder drop-offs and other areas such as lane transitions where positive daytime and nighttime delineation is required. The Engineer/Inspector shall refer to the Roadway Design Manual Appendix B "Treatment of Pavement Drop-offs in Work Zones" for additional guidelines on the use of VP's for drop-offs.
3. VP's should be mounted back to back if used at the edge of cuts adjacent to two-way two lane roadways. Stripes are to be reflective orange and reflective white and should always slope downward toward the travel lane.
4. VP's used on expressways and freeways or other high speed roadways, may have more than 270 square inches of retroreflective area facing traffic.
5. Self-righting supports are available with portable base. See "Compliant Work Zone Traffic Control Devices List" (CWZTCD).
6. Sheeting for the VP's shall be retroreflective Type A conforming to Departmental Material Specification DMS-8300, unless noted otherwise.
7. Where the height of reflective material on the vertical panel is 36 inches or greater, a panel stripe of 6 inches shall be used.

VERTICAL PANELS (VPs)

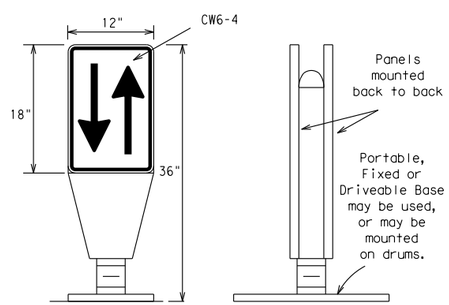

1. Opposing Traffic Lane Dividers (OTLD) are delineation devices designed to convert a normal one-way roadway section to two-way operation. OTLD's are used on temporary centerlines. The upward and downward arrows on the sign's face indicate the direction of traffic on either side of the divider. The base is secured to the pavement with an adhesive or rubber weight to minimize movement caused by a vehicle impact or wind gust.
2. The OTLD may be used in combination with 42" cones or VPs.
3. Spacing between the OTLD shall not exceed 500 feet. 42" cones or VPs placed between the OTLD's should not exceed 100 foot spacing.
4. The OTLD shall be orange with a black non-reflective legend. Sheeting for the OTLD shall be retroreflective Type B_{FL} or Type C_{FL} conforming to Departmental Material Specification DMS-8300, unless noted otherwise. The legend shall meet the requirements of DMS-8300.

OPPOSING TRAFFIC LANE DIVIDERS (OTLD)

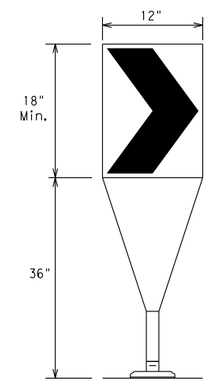

Fixed Base w/ Approved Adhesive (Driveable Base, or Flexible Support can be used)

1. The chevron shall be a vertical rectangle with a minimum size of 12 by 18 inches.
2. Chevrons are intended to give notice of a sharp change of alignment with the direction of travel and provide additional emphasis and guidance for vehicle operators with regard to changes in horizontal alignment of the roadway.
3. Chevrons, when used, shall be erected on the outside of a sharp curve or turn, or on the far side of an intersection. They shall be in line with and at right angles to approaching traffic. Spacing should be such that the motorist always has three in view, until the change in alignment eliminates its need.
4. To be effective, the chevron should be visible for at least 500 feet.
5. Chevrons shall be orange with a black nonreflective legend. Sheeting for the chevron shall be retroreflective Type B_{FL} or Type C_{FL} conforming to Departmental Material Specification DMS-8300, unless noted otherwise. The legend shall meet the requirements of DMS-8300.
6. For Long Term Stationary use on tapers or transitions on freeways and divided highways self-righting chevrons may be used to supplement plastic drums but not to replace plastic drums.

CHEVRONS

GENERAL NOTES

1. Work Zone channelizing devices illustrated on this sheet may be installed in close proximity to traffic and are suitable for use on high or low speed roadways. The Engineer/Inspector shall ensure that spacing and placement is uniform and in accordance with the "Texas Manual on Uniform Traffic Control Devices" (TMUTCD).
2. Channelizing devices shown on this sheet may have a driveable, fixed or portable base. The requirement for self-righting channelizing devices must be specified in the General Notes or other plan sheets.
3. Channelizing devices on self-righting supports should be used in work zone areas where channelizing devices are frequently impacted by errant vehicles or vehicle related wind gusts making alignment of the channelizing devices difficult to maintain. Locations of these devices shall be detailed elsewhere in the plans. These devices shall conform to the TMUTCD and the "Compliant Work Zone Traffic Control Devices List" (CWZTCD).
4. The Contractor shall maintain devices in a clean condition and replace damaged, nonreflective, faded, or broken devices and bases as required by the Engineer/Inspector. The Contractor shall be required to maintain proper device spacing and alignment.
5. Portable bases shall be fabricated from virgin and/or recycled rubber. The portable bases shall weigh a minimum of 30 lbs.
6. Pavement surfaces shall be prepared in a manner that ensures proper bonding between the adhesives, the fixed mount bases and the pavement surface. Adhesives shall be prepared and applied according to the manufacturer's recommendations.
7. The installation and removal of channelizing devices shall not cause detrimental effects to the final pavement surfaces, including pavement surface discoloration or surface integrity. Driveable bases shall not be permitted on final pavement surfaces. The Engineer/Inspector shall approve all application and removal procedures of fixed bases.

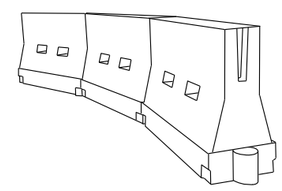

LONGITUDINAL CHANNELIZING DEVICES (LCD)

1. LCDs are crashworthy, lightweight, deformable devices that are highly visible, have good target value and can be connected together. They are not designed to contain or redirect a vehicle on impact.
2. LCDs may be used instead of a line of cones or drums.
3. LCDs shall be placed in accordance to application and installation requirements specific to the device, and used only when shown on the CWZTCD list.
4. LCDs should not be used to provide positive protection for obstacles, pedestrians or workers.
5. LCDs shall be supplemented with retroreflective delineation as required for temporary barriers on BC(7) when placed roughly parallel to the travel lanes.
6. LCDs used as barricades placed perpendicular to traffic should have at least one row of reflective sheeting meeting the requirements for barricade rails as shown on BC(10) placed near the top of the LCD along the full length of the device.

WATER BALLASTED SYSTEMS USED AS BARRIERS

1. Water ballasted systems used as barriers shall not be used solely to channelize road users, but also to protect the work space per the appropriate NCHRP 350 crashworthiness requirements based on roadway speed and barrier application.
2. Water ballasted systems used to channelize vehicular traffic shall be supplemented with retroreflective delineation or channelizing devices to improve daytime/nighttime visibility. They may also be supplemented with pavement markings.
3. Water ballasted systems used as barriers shall be placed in accordance to application and installation requirements specific to the device, and used only when shown on the CWZTCD list.
4. Water ballasted systems used as barriers should not be used for a merging taper except in low speed (less than 45 MPH) urban areas. When used on a taper in a low speed urban area, the taper shall be delineated and the taper length should be designed to optimize road user operations considering the available geometric conditions.
5. When water ballasted systems used as barriers have blunt ends exposed to traffic, they should be attenuated as per manufacturer recommendations or flared to a point outside the clear zone.

If used to channelize pedestrians, longitudinal channelizing devices or water ballasted systems must have a continuous detectable bottom for users of long canes and the top of the unit shall not be less than 32 inches in height.

HOLLOW OR WATER BALLASTED SYSTEMS USED AS LONGITUDINAL CHANNELIZING DEVICES OR BARRIERS

Posted Speed ✱	Formula	Minimum Desirable Taper Lengths ✱✱			Suggested Maximum Spacing of Channelizing Devices	
		10' Offset	11' Offset	12' Offset	On a Taper	On a Tangent
30	$L = \frac{WS^2}{60}$	150'	165'	180'	30'	60'
35		205'	225'	245'	35'	70'
40		265'	295'	320'	40'	80'
45	L = WS	450'	495'	540'	45'	90'
50		500'	550'	600'	50'	100'
55		550'	605'	660'	55'	110'
60		600'	660'	720'	60'	120'
65		650'	715'	780'	65'	130'
70		700'	770'	840'	70'	140'
75		750'	825'	900'	75'	150'
80		800'	880'	960'	80'	160'

✱✱ Taper lengths have been rounded off.
L=Length of Taper (FT.) W=Width of Offset (FT.)
S=Posted Speed (MPH)

SUGGESTED MAXIMUM SPACING OF CHANNELIZING DEVICES AND MINIMUM DESIRABLE TAPER LENGTHS

Texas Department of Transportation — Traffic Operations Division Standard

BARRICADE AND CONSTRUCTION CHANNELIZING DEVICES

BC(9)-14

FILE: bc-14.dgn	DN: TxDOT	CK: TxDOT	DW: TxDOT	CK: TxDOT
© TxDOT November 2002	CONT	SECT	JOB	HIGHWAY
REVISIONS 9-07 8-14 7-13	DIST	COUNTY		SHEET NO.

DATE:
FILE:

TYPE 3 BARRICADES

1. Refer to the Compliant Work Zone Traffic Control Devices List (CWZTCD) for details of the Type 3 Barricades and a list of all materials used in the construction of Type 3 Barricades.
2. Type 3 Barricades shall be used at each end of construction projects closed to all traffic.
3. Barricades extending across a roadway should have stripes that slope downward in the direction toward which traffic must turn in detouring. When both right and left turns are provided, the chevron striping may slope downward in both directions from the center of the barricade. Where no turns are provided at a closed road striping should slope downward in both directions toward the center of roadway.
4. Striping of rails, for the right side of the roadway, should slope downward to the left. For the left side of the roadway, striping should slope downward to the right.
5. Identification markings may be shown only on the back of the barricade rails. The maximum height of letters and/or company logos used for identification shall be 1".
6. Barricades shall not be placed parallel to traffic unless an adequate clear zone is provided.
7. Warning lights shall NOT be installed on barricades.
8. Where barricades require the use of weights to keep from turning over, the use of sandbags with dry, cohesionless sand is recommended. The sandbags will be tied shut to keep the sand from spilling and to maintain a constant weight. Sand bags shall not be stacked in a manner that covers any portion of a barricade rails reflective sheeting. Rock, concrete, iron, steel or other solid objects will NOT be permitted. Sandbags should weigh a minimum of 35 lbs and a maximum of 50 lbs. Sandbags shall be made of a durable material that tears upon vehicular impact. Rubber (such as tire inner tubes) shall not be used for sandbags. Sandbags shall only be placed along or upon the base supports of the device and shall not be suspended above ground level or hung with rope, wire, chains or other fasteners.
9. Sheeting for barricades shall be retroreflective Type A conforming to Departmental Material Specification DMS-8300 unless otherwise noted.

Barricades shall NOT be used as a sign support.

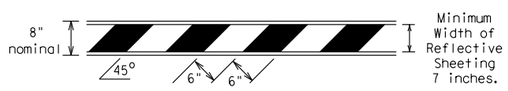

TYPICAL STRIPING DETAIL FOR BARRICADE RAIL

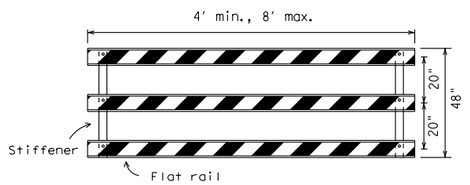

Stiffener may be inside or outside of support, but no more than 2 stiffeners shall be allowed on one barricade.

TYPICAL PANEL DETAIL FOR SKID OR POST TYPE BARRICADES

Each roadway of a divided highway shall be barricaded in the same manner.

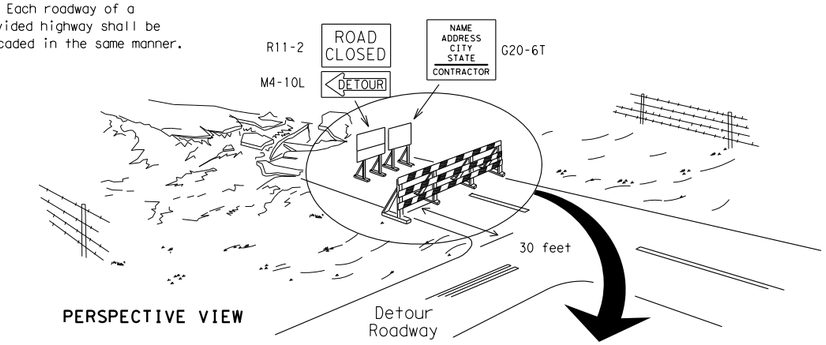

PERSPECTIVE VIEW

The three rails on Type 3 barricades shall be reflectorized orange and reflective white stripes on one side facing one-way traffic and both sides for two-way traffic.

Barricade striping should slant downward in the direction of detour.

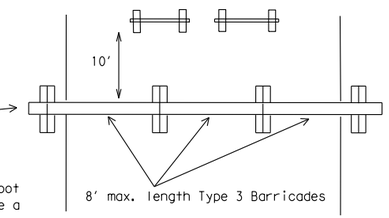

PLAN VIEW

1. Signs should be mounted on independent supports at a 7 foot mounting height in center of roadway. The signs should be a minimum of 10 feet behind Type 3 Barricades.
2. Advance signing shall be as specified elsewhere in the plans.

TYPE 3 BARRICADE (POST AND SKID) TYPICAL APPLICATION

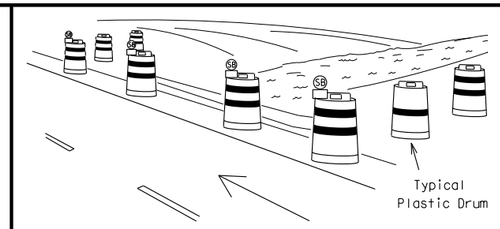

PERSPECTIVE VIEW

1. Where positive redirectional capability is provided, drums may be omitted.
2. Plastic construction fencing may be used with drums for safety as required in the plans.
3. Vertical Panels on flexible support may be substituted for drums when the shoulder width is less than 4 feet.
4. When the shoulder width is greater than 12 feet, steady-burn lights may be omitted if drums are used.
5. Drums must extend the length of the culvert widening.

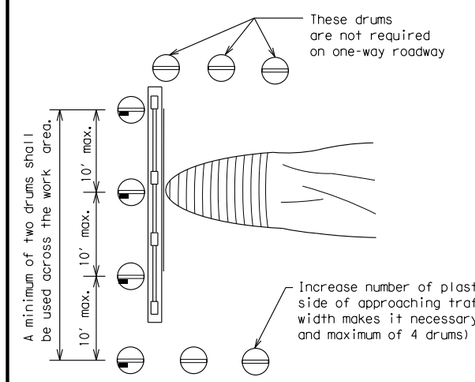

PLAN VIEW

LEGEND	
	Plastic drum
	Plastic drum with steady burn light or yellow warning reflector
SB	Steady burn warning light or yellow warning reflector

CULVERT WIDENING OR OTHER ISOLATED WORK WITHIN THE PROJECT LIMITS

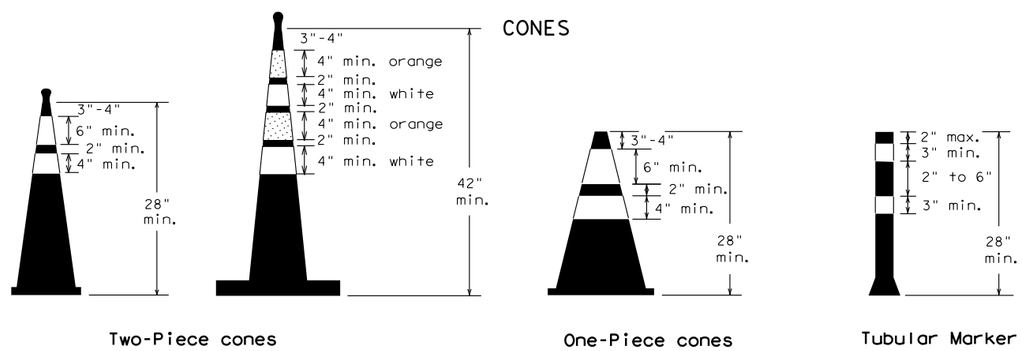

Two-Piece cones

One-Piece cones

Tubular Marker

28" Cones shall have a minimum weight of 9 1/2 lbs.

42" 2-piece cones shall have a minimum weight of 30 lbs. including base.

1. Traffic cones and tubular markers shall be predominantly orange, and meet the height and weight requirements shown above.
2. One-piece cones have the body and base of the cone molded in one consolidated unit. Two-piece cones have a cone shaped body and a separate rubber base, or ballast, that is added to keep the device upright and in place.
3. Two-piece cones may have a handle or loop extending up to 8" above the minimum height shown, in order to aid in retrieving the device.
4. Cones or tubular markers used at night shall have white or white and orange reflective bands as shown above. The reflective bands shall have a smooth, sealed outer surface and meet the requirements of Departmental Material Specification DMS-8300 Type A.
5. 28" cones and tubular markers are generally suitable for short duration and short-term stationary work as defined on BC(4). These should not be used for intermediate-term or long-term stationary work unless personnel is on-site to maintain them in their proper upright position.
6. 42" two-piece cones, vertical panels or drums are suitable for all work zone durations.
7. Cones or tubular markers used on each project should be of the same size and shape.

THIS DEVICE SHALL NOT BE USED ON PROJECTS LET AFTER MARCH 2014.

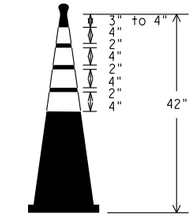

EDGELINE CHANNELIZER

1. This device is intended only for use in place of a vertical panel to channelize traffic by indicating the edge of the travel lane. It is not intended to be used in transitions or tapers.
2. This device shall not be used to separate lanes of traffic (opposing or otherwise) or warn of objects.
3. This device is based on a 42 inch, two-piece cone with an alternate striping pattern: four 4 inch retroreflective bands, with an approximate 2 inch gap between bands. The color of the band should correspond to the color of the edgeline (yellow for left edgeline, white for right edgeline) for which the device is substituted or for which it supplements. The reflectorized bands shall be retroreflective Type A conforming to Departmental Material Specification DMS-8300, unless otherwise noted.
4. The base must weigh a minimum of 30 lbs.

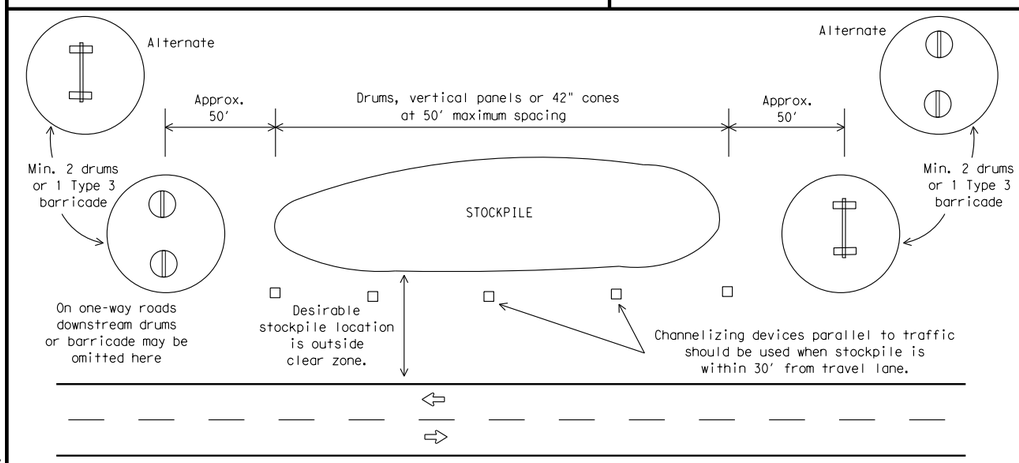

TRAFFIC CONTROL FOR MATERIAL STOCKPILES

DISCLAIMER:
The use of this standard is governed by the "Texas Engineering Practice Act". No warranty of any kind is made by TxDOT for any purpose whatsoever. TxDOT assumes no responsibility for the conversion of this standard to other formats or for incorrect results or damages resulting from its use.

SHEET 10 OF 12

Texas Department of Transportation — Traffic Operations Division Standard

BARRICADE AND CONSTRUCTION CHANNELIZING DEVICES

BC(10)-14

FILE: bc-14.dgn	DN: TxDOT	CK: TxDOT	DW: TxDOT	CK: TxDOT
© TxDOT November 2002	CONT	SECT	JOB	HIGHWAY
REVISIONS 9-07 8-14 7-13	DIST		COUNTY	SHEET NO.

DATE:
FILE:

DISCLAIMER:
The use of this standard is governed by the "Texas Engineering Practice Act". No warranty of any kind is made by TxDOT for any purpose whatsoever. TxDOT assumes no responsibility for the conversion of this standard to other formats or for incorrect results or damages resulting from its use.

WORK ZONE PAVEMENT MARKINGS

GENERAL

1. The Contractor shall be responsible for maintaining work zone and existing pavement markings, in accordance with the standard specifications and special provisions, on all roadways open to traffic within the CSJ limits unless otherwise stated in the plans.
2. Color, patterns and dimensions shall be in conformance with the "Texas Manual on Uniform Traffic Control Devices" (TMUTCD).
3. Additional supplemental pavement marking details may be found in the plans or specifications.
4. Pavement markings shall be installed in accordance with the TMUTCD and as shown on the plans.
5. When short term markings are required on the plans, short term markings shall conform with the TMUTCD, the plans and details as shown on the Standard Plan Sheet WZ(STPM).
6. When standard pavement markings are not in place and the roadway is opened to traffic, DO NOT PASS signs shall be erected to mark the beginning of the sections where passing is prohibited and PASS WITH CARE signs at the beginning of sections where passing is permitted.
7. All work zone pavement markings shall be installed in accordance with Item 662, "Work Zone Pavement Markings."

RAISED PAVEMENT MARKERS

1. Raised pavement markers are to be placed according to the patterns on BC(12).
2. All raised pavement markers used for work zone markings shall meet the requirements of Item 672, "RAISED PAVEMENT MARKERS" and Departmental Material Specification DMS-4200 or DMS-4300.

PREFABRICATED PAVEMENT MARKINGS

1. Removable prefabricated pavement markings shall meet the requirements of DMS-8241.
2. Non-removable prefabricated pavement markings (foil back) shall meet the requirements of DMS-8240.

MAINTAINING WORK ZONE PAVEMENT MARKINGS

1. The Contractor will be responsible for maintaining work zone pavement markings within the work limits.
2. Work zone pavement markings shall be inspected in accordance with the frequency and reporting requirements of work zone traffic control device inspections as required by Form 599.
3. The markings should provide a visible reference for a minimum distance of 300 feet during normal daylight hours and 160 feet when illuminated by automobile low-beam headlights at night, unless sight distance is restricted by roadway geometrics.
4. Markings failing to meet this criteria within the first 30 days after placement shall be replaced at the expense of the Contractor as per Specification Item 662.

REMOVAL OF PAVEMENT MARKINGS

1. Pavement markings that are no longer applicable, could create confusion or direct a motorist toward or into the closed portion of the roadway shall be removed or obliterated before the roadway is opened to traffic.
2. The above shall not apply to detours in place for less than three days, where flaggers and/or sufficient channelizing devices are used in lieu of markings to outline the detour route.
3. Pavement markings shall be removed to the fullest extent possible, so as not to leave a discernable marking. This shall be by any method approved by TxDOT Specification Item 677 for "Eliminating Existing Pavement Markings and Markers".
4. The removal of pavement markings may require resurfacing or seal coating portions of the roadway as described in Item 677.
5. Subject to the approval of the Engineer, any method that proves to be successful on a particular type pavement may be used.
6. Blast cleaning may be used but will not be required unless specifically shown in the plans.
7. Over-painting of the markings SHALL NOT BE permitted.
8. Removal of raised pavement markers shall be as directed by the Engineer.
9. Removal of existing pavement markings and markers will be paid for directly in accordance with Item 677, "ELIMINATING EXISTING PAVEMENT MARKINGS AND MARKERS," unless otherwise stated in the plans.
10. Black-out marking tape may be used to cover conflicting existing markings for periods less than two weeks when approved by the Engineer.

Temporary Flexible-Reflective Roadway Marker Tabs

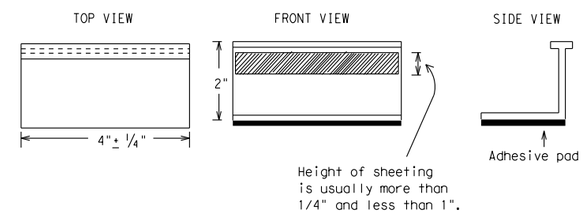

STAPLES OR NAILS SHALL NOT BE USED TO SECURE TEMPORARY FLEXIBLE-REFLECTIVE ROADWAY MARKER TABS TO THE PAVEMENT SURFACE

1. Temporary flexible-reflective roadway marker tabs used as guidemarks shall meet the requirements of DMS-8242.
2. Tabs detailed on this sheet are to be inspected and accepted by the Engineer or designated representative. Sampling and testing is not normally required, however at the option of the Engineer, either "A" or "B" below may be imposed to assure quality before placement on the roadway.
   A. Select five (5) or more tabs at random from each lot or shipment and submit to the Construction Division, Materials and Pavement Section to determine specification compliance.
   B. Select five (5) tabs and perform the following test. Affix five (5) tabs at 24 inch intervals on an asphaltic pavement in a straight line. Using a medium size passenger vehicle or pickup, run over the markers with the front and rear tires at a speed of 35 to 40 miles per hour, four (4) times in each direction. No more than one (1) out of the five (5) reflective surfaces shall be lost or displaced as a result of this test.
3. Small design variances may be noted between tab manufacturers.
4. See Standard Sheet WZ(STPM) for tab placement on new pavements. See Standard Sheet TCP(7-1) for tab placement on seal coat work.

RAISED PAVEMENT MARKERS USED AS GUIDEMARKS

1. Raised pavement markers used as guidemarks shall be from the approved product list, and meet the requirements of DMS-4200.
2. All temporary construction raised pavement markers provided on a project shall be of the same manufacturer.
3. Adhesive for guidemarks shall be bituminous material hot applied or butyl rubber pad for all surfaces, or thermoplastic for concrete surfaces.

Guidemarks shall be designated as:
YELLOW - (two amber reflective surfaces with yellow body).
WHITE - (one silver reflective surface with white body).

DEPARTMENTAL MATERIAL SPECIFICATIONS	
PAVEMENT MARKERS (REFLECTORIZED)	DMS-4200
TRAFFIC BUTTONS	DMS-4300
EPOXY AND ADHESIVES	DMS-6100
BITUMINOUS ADHESIVE FOR PAVEMENT MARKERS	DMS-6130
PERMANENT PREFABRICATED PAVEMENT MARKINGS	DMS-8240
TEMPORARY REMOVABLE, PREFABRICATED PAVEMENT MARKINGS	DMS-8241
TEMPORARY FLEXIBLE, REFLECTIVE ROADWAY MARKER TABS	DMS-8242

A list of prequalified reflective raised pavement markers, non-reflective traffic buttons, roadway marker tabs and other pavement markings can be found at the Material Producer List web address shown on BC(1).

Texas Department of Transportation — Traffic Operations Division Standard

BARRICADE AND CONSTRUCTION PAVEMENT MARKINGS

BC(11)-14

FILE: bc-14.dgn	DN: TxDOT	CK: TxDOT	DW: TxDOT	CK: TxDOT
© TxDOT February 1998	CONT	SECT	JOB	HIGHWAY
REVISIONS 2-98 9-07, 1-02 7-13, 11-02 8-14	DIST	COUNTY		SHEET NO.

DATE:
FILE:

PAVEMENT MARKING PATTERNS

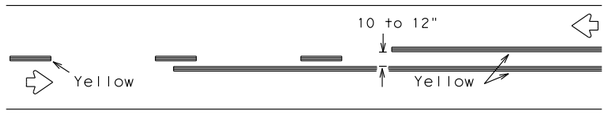

REFLECTORIZED PAVEMENT MARKINGS - PATTERN A

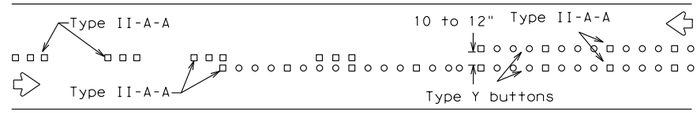

RAISED PAVEMENT MARKERS - PATTERN A

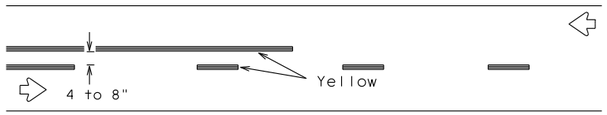

REFLECTORIZED PAVEMENT MARKINGS - PATTERN B

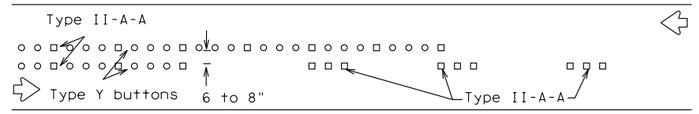

RAISED PAVEMENT MARKERS - PATTERN B

Pattern A is the TXDOT Standard, however Pattern B may be used if approved by the Engineer.
Prefabricated markings may be substituted for reflectorized pavement markings.

CENTER LINE & NO-PASSING ZONE BARRIER LINES FOR TWO-LANE, TWO-WAY HIGHWAYS

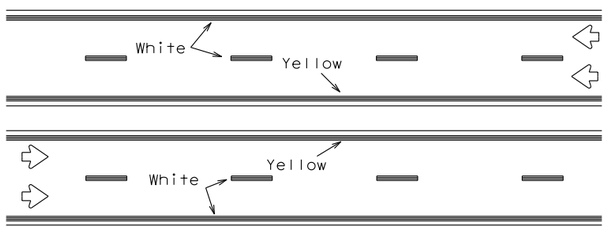

REFLECTORIZED PAVEMENT MARKINGS

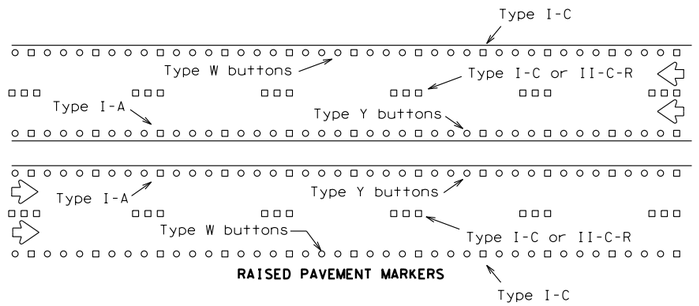

RAISED PAVEMENT MARKERS

Prefabricated markings may be substituted for reflectorized pavement markings.

EDGE & LANE LINES FOR DIVIDED HIGHWAY

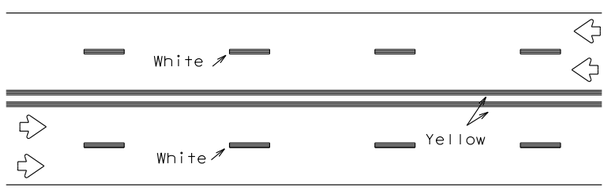

REFLECTORIZED PAVEMENT MARKINGS

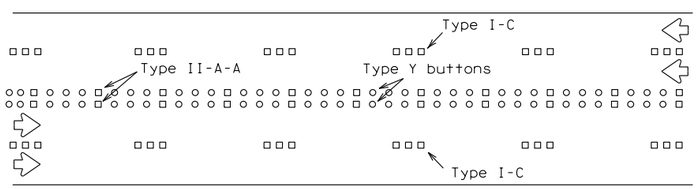

RAISED PAVEMENT MARKERS

Prefabricated markings may be substituted for reflectorized pavement markings.

LANE & CENTER LINES FOR MULTILANE UNDIVIDED HIGHWAYS

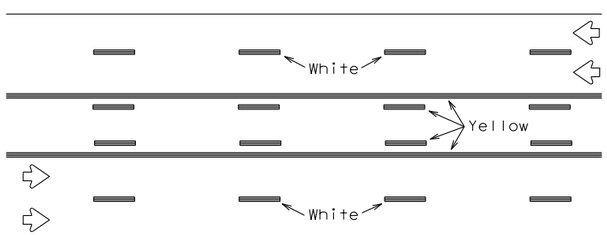

REFLECTORIZED PAVEMENT MARKINGS

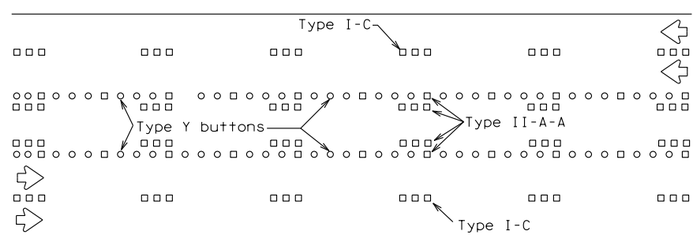

RAISED PAVEMENT MARKERS

Prefabricated markings may be substituted for reflectorized pavement markings.

TWO-WAY LEFT TURN LANE

STANDARD WORK ZONE PAVEMENT MARKINGS DETAILS

SOLID LINES

DOUBLE NO-PASSING LINE

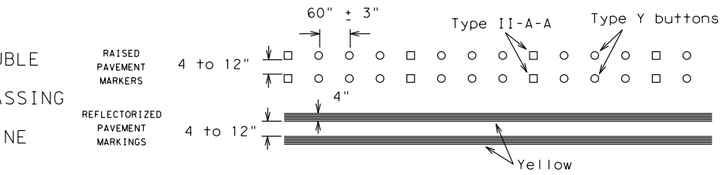

EDGE LINE OR SINGLE NO-PASSING LINE

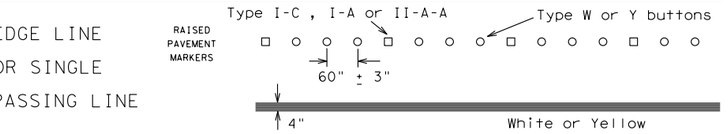

WIDE LINE

(FOR LEFT TURN CHANNELIZING LINE OR CHANNELIZING LINE USED TO DISCOURAGE LANE CHANGING.)

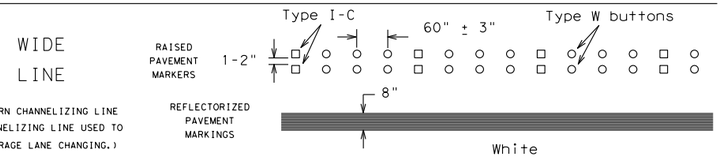

BROKEN LINES

CENTER LINE OR LANE LINE

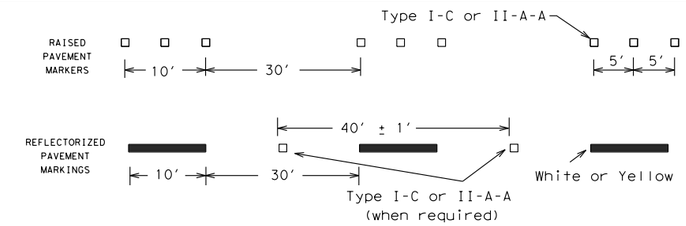

AUXILIARY OR LANEDROP LINE

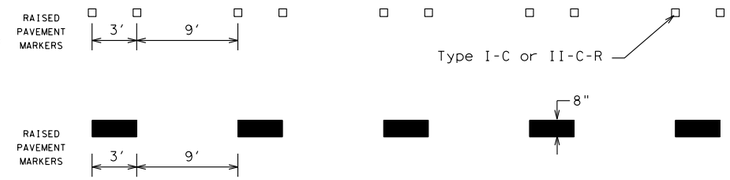

REMOVABLE MARKINGS WITH RAISED PAVEMENT MARKERS

If raised pavement markers are used to supplement REMOVABLE markings, the markers shall be applied to the top of the tape at the approximate mid length of tape used for broken lines or at 20 foot spacing for solid lines. This allows an easier removal of raised pavement markers and tape.

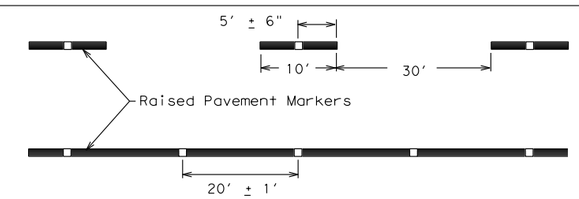

Centerline only - not to be used on edge lines

Raised pavement markers used as standard pavement markings shall be from the approved products list and meet the requirements of Item 672 "RAISED PAVEMENT MARKERS."

SHEET 12 OF 12

Texas Department of Transportation — Traffic Operations Division Standard

BARRICADE AND CONSTRUCTION PAVEMENT MARKING PATTERNS

BC(12)-14

FILE: bc-14.dgn	DN: TxDOT	CK: TxDOT	DW: TxDOT	CK: TxDOT
© TxDOT February 1998	CONT	SECT	JOB	HIGHWAY
REVISIONS 1-97 9-07 2-98 7-13 11-02 8-14	DIST	COUNTY		SHEET NO.

106

DISCLAIMER:
The use of this standard is governed by the "Texas Engineering Practice Act". No warranty of any kind is made by TxDOT for any purpose whatsoever. TxDOT assumes no responsibility for the conversion of this standard to other formats or for incorrect results or damages resulting from its use.

DATE:
FILE:

DISCLAIMER:
The use of this standard is governed by the "Texas Engineering Practice Act". No warranty of any kind is made by TxDOT for any purpose whatsoever. TxDOT assumes no responsibility for the conversion of this standard to other formats or for incorrect results or damages resulting from its use.

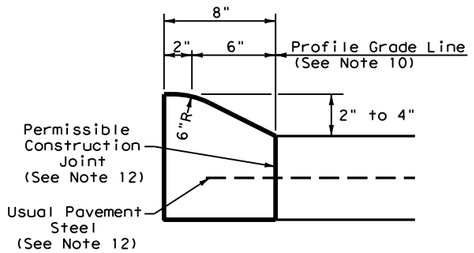

TYPE I CURB (MONOLITHIC)
2" - 4" HEIGHT

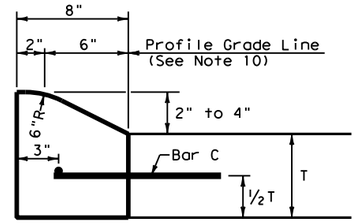

TYPE I CURB
2" - 4" HEIGHT

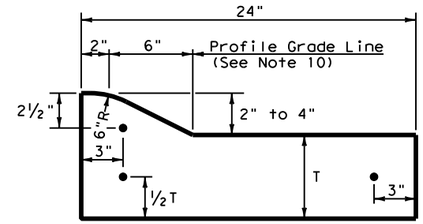

TYPE I CURB AND GUTTER
2" - 4" HEIGHT

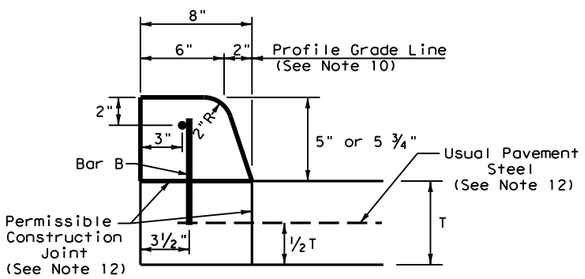

TYPE II CURB (MONOLITHIC)
5" - 5 ¾" HEIGHT

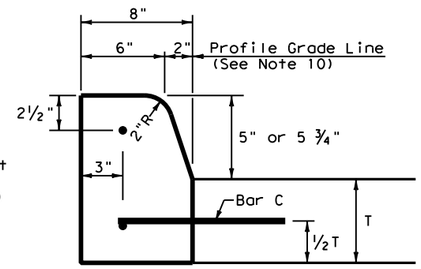

TYPE II CURB
5" - 5 ¾" HEIGHT

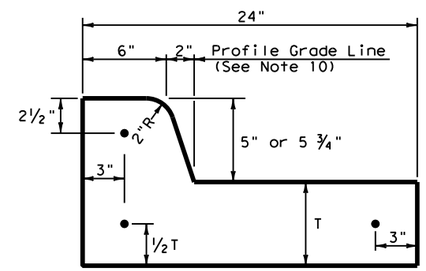

TYPE II CURB AND GUTTER
5" - 5 ¾" HEIGHT

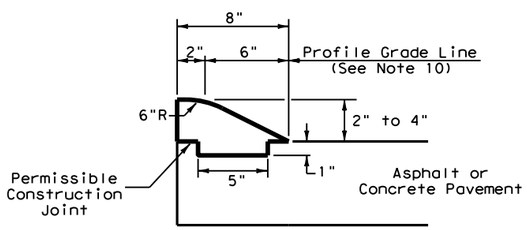

TYPE III CURB (KEYED)
2" - 4" HEIGHT

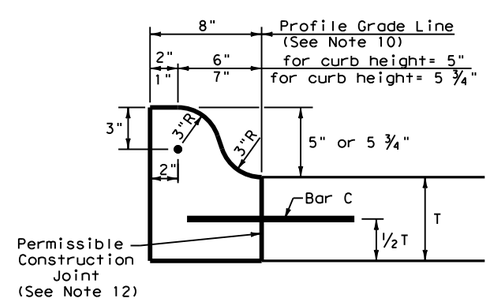

TYPE IIa CURB
5" - 5 ¾" HEIGHT

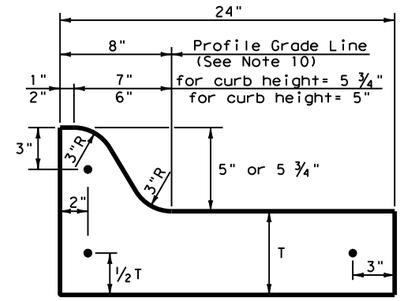

TYPE IIa CURB AND GUTTER
5" - 5 ¾" HEIGHT

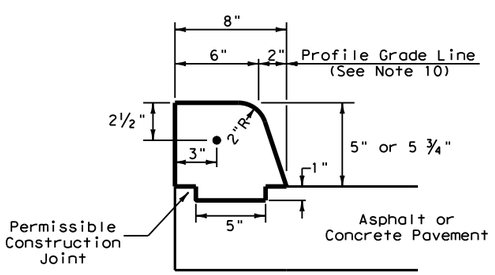

TYPE IV CURB (KEYED)
5" - 5 ¾" HEIGHT

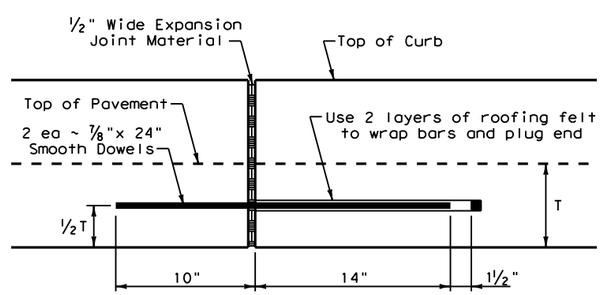

EXPANSION JOINT DETAIL

Curb Transition Note:
Field conditions may require a longer or shorter transition, and shall be shown elsewhere in the plans, or as directed by the Engineer.

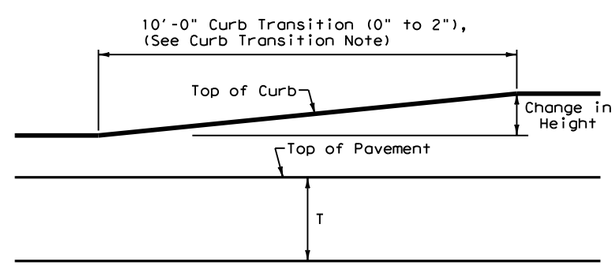

CURB TRANSITION
Note: To be paid for as Highest Curb

General Notes

1. All materials and construction shall be in accordance with Item 529, "Concrete Curb, Gutter, and Combined Curb and Gutter."
2. Concrete shall be Class A.
3. When reinforcing bars are used, they shall be No. 4 unless otherwise shown. The use of synthetic fiber in lieu of steel reinforcing is acceptable, provided the fiber producer is on the Department Producer List (MPL), maintained by TxDOT, Construction Division.
4. Round exposed sharp edges with a rounding tool, to a minimum radius of ¼ inch.
5. All existing curbs and driveways to be removed shall be sawed or removed at existing joints.
6. Where concrete curb is placed on existing concrete pavement, the pavement shall be drilled and the reinforcing bars grouted in place.
7. Expansion and contraction joints shall be constructed to match pavement joints in all curbs and curb and gutter adjacent to jointed concrete pavement. Where placement of curb or curb and gutter is not adjacent to concrete pavement, expansion joints shall be provided at structures, curb returns at streets, and at locations directed by The Engineer.
8. Vertical and horizontal dowel bars and transverse reinforcing bars shall be placed at four feet C~C.
9. Dimension 'T' shown is the thickness of concrete pavement. When curb is installed adjacent to flexible pavement dimension 'T' is 8" maximum.
10. Usual profile grade line. Refer to typical sections and plan-profile sheets for exact locations.
11. One-half inch expansion joint material shall be provided where curb or curb and gutter is adjacent to sidewalk or riprap.
12. When vertical permissible construction joints are used, resulting in a longitudinal construction joint in the pavement, the longitudinal pavement steel shall be placed in accordance with pavement details shown elsewhere in the plans for longitudinal construction joints. Reinforcing steel for curb section shall then conform to that required for concrete curb.

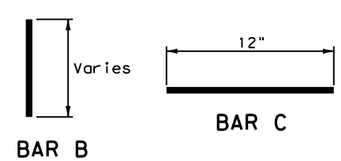

Texas Department of Transportation
Design Division Standard

CONCRETE CURB AND CURB AND GUTTER

CCCG-12

FILE: cccg12.dgn	DN: TxDOT	CK: AM	DW: VP	CK: VP
© TxDOT: 1995	CONT	SECT	JOB	HIGHWAY
REVISIONS UPDATED 2012 - VP	DIST		COUNTY	SHEET NO.

DATE:
FILE:

TABLE OF VARIABLE DIMENSIONS AND QUANTITIES FOR ONE HEADWALL (4)

SLOPE	DIA OF PIPE, D	Values for one Pipe						Values to be added for each addt'l Pipe		
		W	X	Y	L	Reinf (Lbs)	Conc (CY) (1)	X and W	Reinf (Lbs)	Conc (CY) (1)
2:1	12"	4'- 7 1/2"	2'- 6"	2'-10"	3'- 3 1/4"	84	0.6	1'- 9"	20	0.2
	15"	5'- 5 3/4"	2'- 9 1/2"	3'- 4"	3'-10 1/4"	99	0.7	2'- 2"	24	0.3
	18"	6'- 4 1/4"	3'- 1"	3'-10"	4'- 5"	120	0.9	2'- 8"	32	0.3
	21"	7'- 2 3/4"	3'- 4 1/2"	4'- 4"	5'- 0"	137	1.1	3'- 1"	43	0.4
	24"	8'- 2 1/2"	3'- 9 1/2"	4'-10"	5'- 7"	158	1.3	3'- 7"	50	0.5
	27"	9'- 1"	4'- 1"	5'- 4"	6'- 2"	173	1.5	3'-11"	56	0.6
	30"	9'-11 1/2"	4'- 4 1/2"	5'-10"	6'- 8 3/4"	197	1.7	4'- 4"	65	0.8
	33"	10'-10"	4'- 8"	6'- 4"	7'- 3 3/4"	216	2.0	4'- 8"	71	0.9
	36"	11'- 8 1/4"	4'-11 1/2"	6'-10"	7'-10 3/4"	241	2.2	5'- 1"	81	1.0
	42"	13'- 5 1/4"	5'- 6 1/2"	7'-10"	9'- 0 1/2"	290	2.8	5'-10"	97	1.3
	48"	15'- 9"	6'- 1 1/2"	9'- 4"	10'- 9 1/4"	350	3.8	6'- 7"	117	1.7
	54"	17'- 5 3/4"	6'- 8 1/2"	10'- 4"	11'-11 1/4"	415	4.5	7'- 6"	151	2.1
	60"	19'- 2 3/4"	7'- 3 1/2"	11'- 4"	13'- 1"	469	5.3	8'- 3"	174	2.5
	66"	20'-11 1/2"	7'-10 1/2"	12'- 4"	14'- 3"	530	6.2	8'- 9"	194	2.9
	72"	22'- 8 1/2"	8'- 5 1/2"	13'- 4"	15'- 4 3/4"	587	7.1	9'- 4"	213	3.3
3:1	12"	6'- 3"	2'- 6"	4'- 3"	4'-11"	114	0.8	1'- 9"	22	0.2
	15"	7'- 5"	2'- 9 1/2"	5'- 0"	5'- 9 1/4"	133	1.1	2'- 2"	28	0.3
	18"	8'- 6 3/4"	3'- 1"	5'- 9"	6'- 7 3/4"	166	1.3	2'- 8"	37	0.5
	21"	9'- 8 3/4"	3'- 4 1/2"	6'- 6"	7'- 6"	189	1.6	3'- 1"	48	0.6
	24"	11'- 0"	3'- 9 1/2"	7'- 3"	8'- 4 1/2"	221	2.0	3'- 7"	58	0.7
	27"	12'- 2"	4'- 1"	8'- 0"	9'- 2 3/4"	245	2.3	3'-11"	67	0.8
	30"	13'- 4"	4'- 4 1/2"	8'- 9"	10'- 1 1/4"	287	2.7	4'- 4"	77	1.0
	33"	14'- 5 3/4"	4'- 8"	9'- 6"	10'-11 3/4"	310	3.1	4'- 8"	84	1.2
	36"	15'- 7 3/4"	4'-11 1/2"	10'- 3"	11'-10"	343	3.5	5'- 1"	96	1.4
	42"	17'-11 1/2"	5'- 6 1/2"	11'- 9"	13'- 6 3/4"	424	4.5	5'-10"	119	1.7
	48"	21'- 1 3/4"	6'- 1 1/2"	14'- 0"	16'- 2"	527	6.1	6'- 7"	146	2.3
	54"	23'- 5 1/2"	6'- 8 1/2"	15'- 6"	17'-10 3/4"	618	7.3	7'- 6"	186	2.9
	60"	25'- 9 1/4"	7'- 3 1/2"	17'- 0"	19'- 7 1/2"	707	8.7	8'- 3"	219	3.4
	66"	28'- 1"	7'-10 1/2"	18'- 6"	21'- 4 1/4"	797	10.1	8'- 9"	242	3.9
	72"	30'- 4 3/4"	8'- 5 1/2"	20'- 0"	23'- 1 1/4"	910	11.7	9'- 4"	272	4.4
4:1	12"	7'-10 3/4"	2'- 6"	5'- 8"	6'- 6 1/2"	144	1.1	1'- 9"	24	0.3
	15"	9'- 4"	2'- 9 1/2"	6'- 8"	7'- 8 1/2"	177	1.5	2'- 2"	32	0.4
	18"	10'- 9 1/2"	3'- 1"	7'- 8"	8'-10 1/4"	217	1.9	2'- 8"	42	0.5
	21"	12'- 2 3/4"	3'- 4 1/2"	8'- 8"	10'- 0"	254	2.3	3'- 1"	57	0.7
	24"	13'- 9 1/2"	3'- 9 1/2"	9'- 8"	11'- 2"	295	2.8	3'- 7"	67	0.9
	27"	15'- 3"	4'- 1"	10'- 8"	12'- 3 3/4"	328	3.3	3'-11"	77	1.0
	30"	16'- 8 1/4"	4'- 4 1/2"	11'- 8"	13'- 5 3/4"	379	3.8	4'- 4"	89	1.3
	33"	18'- 1 3/4"	4'- 8"	12'- 8"	14'- 7 1/2"	417	4.5	4'- 8"	101	1.4
	36"	19'- 7"	4'-11 1/2"	13'- 8"	15'- 9 1/4"	464	5.1	5'-1"	115	1.7
	42"	22'- 5 3/4"	5'- 6 1/2"	15'- 8"	18'- 1"	575	6.5	5'-10"	141	2.1
	48"	26'- 6 1/4"	6'- 1 1/2"	18'- 8"	21'- 6 3/4"	720	8.9	6'- 7"	175	2.8
	54"	29'- 5"	6'- 8 1/2"	20'- 8"	23'-10 1/4"	863	10.7	7'- 6"	226	3.6
	60"	32'- 3 3/4"	7'- 3 1/2"	22'- 8"	26'- 2"	984	12.7	8'- 3"	264	4.3
	66"	35'- 2 1/2"	7'-10 1/2"	24'- 8"	28'- 5 3/4"	1126	14.9	8'- 9"	300	4.9
	72"	38'- 1 1/4"	8'- 5 1/2"	26'- 8"	30'- 9 1/2"	1283	17.3	9'- 4"	334	5.6
6:1	12"	11'- 2"	2'- 6"	8'- 6"	9'- 9 3/4"	220	1.9	1'- 9"	28	0.4
	15"	13'- 2 1/4"	2'- 9 1/2"	10'- 0"	11'- 6 1/2"	264	2.5	2'- 2"	37	0.5
	18"	15'- 2 1/2"	3'- 1"	11'- 6"	13'- 3 1/4"	326	3.2	2'- 8"	50	0.7
	21"	17'- 2 3/4"	3'- 4 1/2"	13'- 0"	15'- 0 1/4"	381	3.9	3'- 1"	69	0.9
	24"	19'- 4 1/2"	3'- 9 1/2"	14'- 6"	16'- 9"	447	4.8	3'- 7"	80	1.2
	27"	21'- 4 3/4"	4'- 1"	16'- 0"	18'- 5 3/4"	506	5.7	3'-11"	96	1.4
	30"	23'- 5 1/4"	4'- 4 1/2"	17'- 6"	20'- 2 1/2"	587	6.7	4'- 4"	110	1.7
	33"	25'- 5 1/2"	4'- 8"	19'- 0"	21'-11 1/4"	667	7.8	4'- 8"	127	2.0
	36"	27'- 5 3/4"	4'-11 1/2"	20'- 6"	23'- 8"	727	9.0	5'- 1"	144	2.3
	42"	31'- 6 1/4"	5'- 6 1/2"	23'- 6"	27'- 1 1/2"	914	11.5	5'-10"	179	3.0
	48"	37'- 3 1/2"	6'- 1 1/2"	28'- 0"	32'- 4"	1181	15.9	6'- 7"	231	4.0
	54"	41'- 4 1/4"	6'- 8 1/2"	31'- 0"	35'- 9 1/2"	1412	19.2	7'- 6"	300	5.0
	60"	45'- 4 3/4"	7'- 3 1/2"	34'- 0"	39'- 3"	1619	22.9	8'- 3"	353	6.0

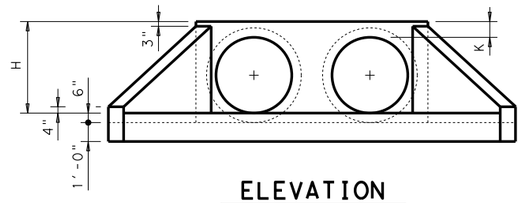

ELEVATION

Showing dimensions

1. Quantities shown are for concrete pipe and will increase slightly for metal pipe installations.
2. For vehicle safety, curbs shall project no more than 3" above finished grade. Curb heights shall be reduced, if necessary, to meet these requirements. No changes will be made in quantities and no additional compensation will be allowed for this work.
3. Provide a 1'-0" footing as shown where required to maintain 4" Min cover for pipes.
4. Quantities shown are for one structure end only (one headwall).
5. Min Length = 6" + 3" x $\left(\frac{12 \times H - 7}{12 \times L}\right)$

   Max Length = 12 x H - 3" x $\left(\frac{12 \times H - 7}{12 \times L}\right)$ - 1"
6. Lengths of wings based on SL:1 Slope along this line.

TABLE OF REINFORCING STEEL (4)

Bar	Size	Spa	No.
A	# 4	1'-0"	~
B	# 3	1'-6"	~
C	# 4	1'-0"	~
D	# 3	1'-0"	~
E	# 5	~	4
F	# 5	~	~
G	# 3	~	2
S	# 4	~	6
V	# 4	1'-0"	~
W	# 5	~	4

TABLE OF CONSTANT DIMENSIONS

DIA OF PIPE, D	G	K	H
12"	9"	1'- 0"	2'- 0"
15"	11"	1'- 0"	2'- 3"
18"	1'- 2"	1'- 0"	2'- 6"
21"	1'- 4"	1'- 0"	2'- 9"
24"	1'- 7"	1'- 0"	3'- 0"
27"	1'- 8"	1'- 0"	3'- 3"
30"	1'-10"	1'- 0"	3'- 6"
33"	1'-11"	1'- 0"	3'- 9"
36"	2'- 1"	1'- 0"	4'- 0"
42"	2'- 4"	1'- 0"	4'- 6"
48"	2'- 7"	1'- 3"	5'- 3"
54"	3'- 0"	1'- 3"	5'- 9"
60"	3'- 3"	1'- 3"	6'- 3"
66"	3'- 3"	1'- 3"	6'- 9"
72"	3'- 4"	1'- 3"	7'- 3"

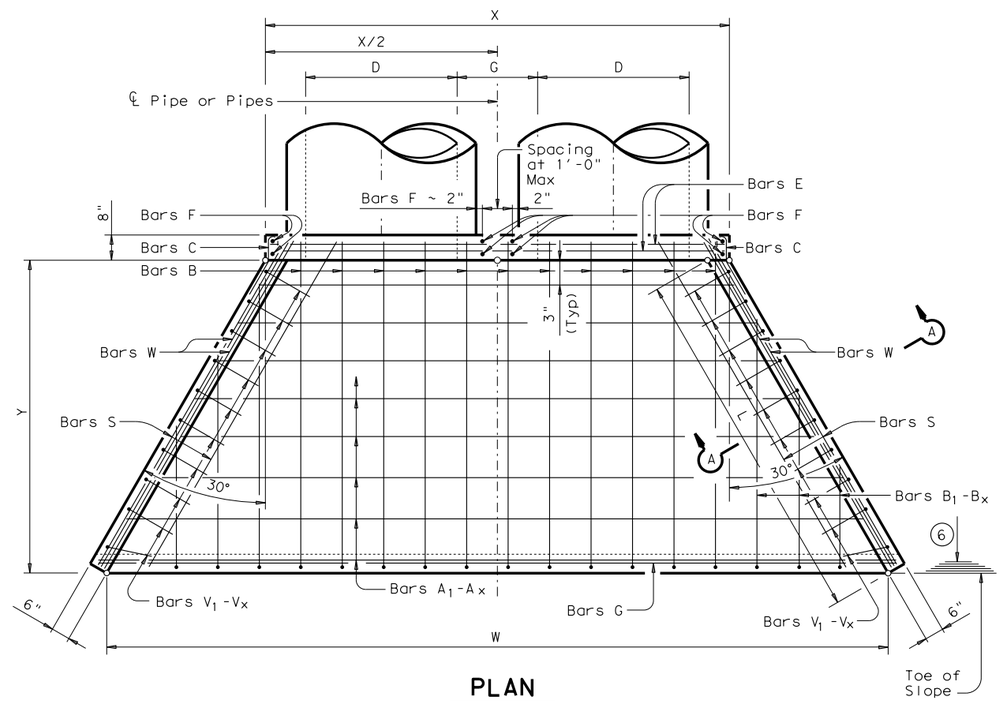

PLAN

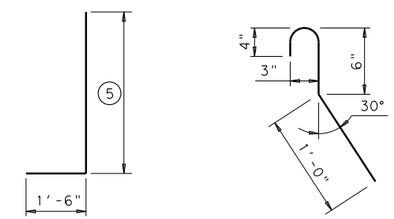

BARS V **BARS C** (2'-0" long)

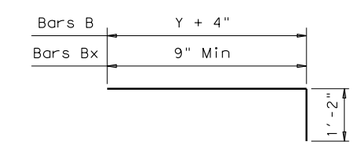

BARS B & B1-Bx

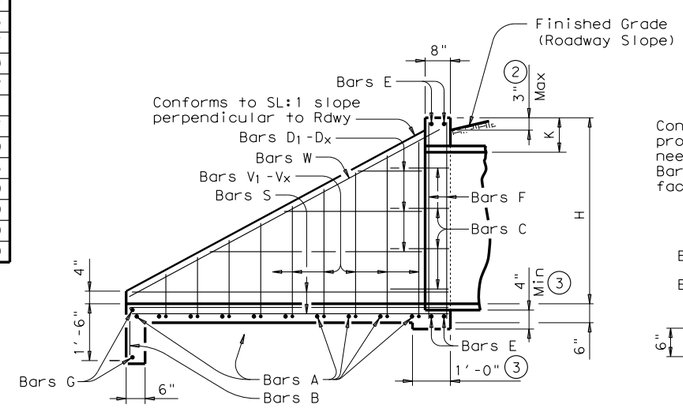

TYPICAL WING ELEVATION

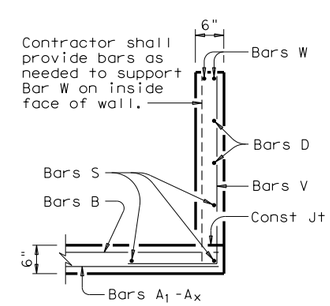

SECTION A-A

GENERAL NOTES:

Designed according to AASHTO LRFD Specifications.

Reinforcing steel shall be placed with the center of the outside layer of bars 2" from the surface of the concrete.

All reinforcing steel shall be Grade 60.

All concrete shall be Class "C" and shall have a minimum compressive strength of 3600 psi.

No bridge rails of any type may be mounted directly to these culvert headwalls.

Texas Department of Transportation — Bridge Division Standard

CONCRETE HEADWALLS WITH FLARED WINGS FOR 0° SKEW PIPE CULVERTS

CH-FW-0

FILE: chfw00se.dgn	DN: TxDOT	CK: TxDOT	DW: TxDOT	CK: GAF
©TxDOT February 2010	CONT	SECT	JOB	HIGHWAY
REVISIONS	DIST		COUNTY	SHEET NO.

DISCLAIMER:
The use of this standard is governed by the "Texas Engineering Practice Act". No warranty of any kind is made by TxDOT for any purpose whatsoever. TxDOT assumes no responsibility for the conversion of this standard to other formats or for incorrect results or damages resulting from its use.

DATE:
FILE:

DISCLAIMER:
The use of this standard is governed by the "Texas Engineering Practice Act". No warranty of any kind is made by TxDOT for any purpose whatsoever. TxDOT assumes no responsibility for the conversion of this standard to other formats or for incorrect results or damages resulting from its use.

TABLE NO. 1 LONGITUDINAL STEEL					
SLAB THICKNESS AND BAR SIZE		REGULAR STEEL BARS	FIRST SPACING AT EDGE OR JOINT	ADDITIONAL STEEL BARS AT TRANSVERSE CONSTRUCTION JOINT (SECTION X-X)	
T (IN.)	BAR SIZE	SPACING C (IN.)	SPACING a (IN.)	SPACING 2 X C (IN.)	LENGTH L (IN.)
7.0	#5	6.5	3 TO 4	13	50
7.5	#5	6.0	3 TO 4	12	50
8.0	#6	9.0	3 TO 4	18	50
8.5	#6	8.5	3 TO 4	17	50
9.0	#6	8.0	3 TO 4	16	50
9.5	#6	7.5	3 TO 4	15	50
10.0	#6	7.0	3 TO 4	14	50
10.5	#6	6.75	3 TO 4	13.5	50
11.0	#6	6.5	3 TO 4	13	50
11.5	#6	6.25	3 TO 4	12.5	50
12.0	#6	6.0	3 TO 4	12	50
12.5	#6	5.75	3 TO 4	11.5	50
13.0	#6	5.5	3 TO 4	11	50

TABLE NO. 2 TRANSVERSE STEEL AND TIE BARS						
SLAB THICKNESS (IN.)	TRANSVERSE STEEL		TIE BARS AT LONGITUDINAL CONTRACTION JOINT (SECTION Z-Z)		TIE BARS AT LONGITUDINAL CONSTRUCTION JOINT (SECTION Y-Y)	
	BAR SIZE	SPACING (IN.)	BAR SIZE	SPACING (IN.)	BAR SIZE	SPACING (IN.)
7.0 - 7.5	#5	48	#5	48	#5	24
8.0 - 13.0	#5	48	#6	48	#6	24

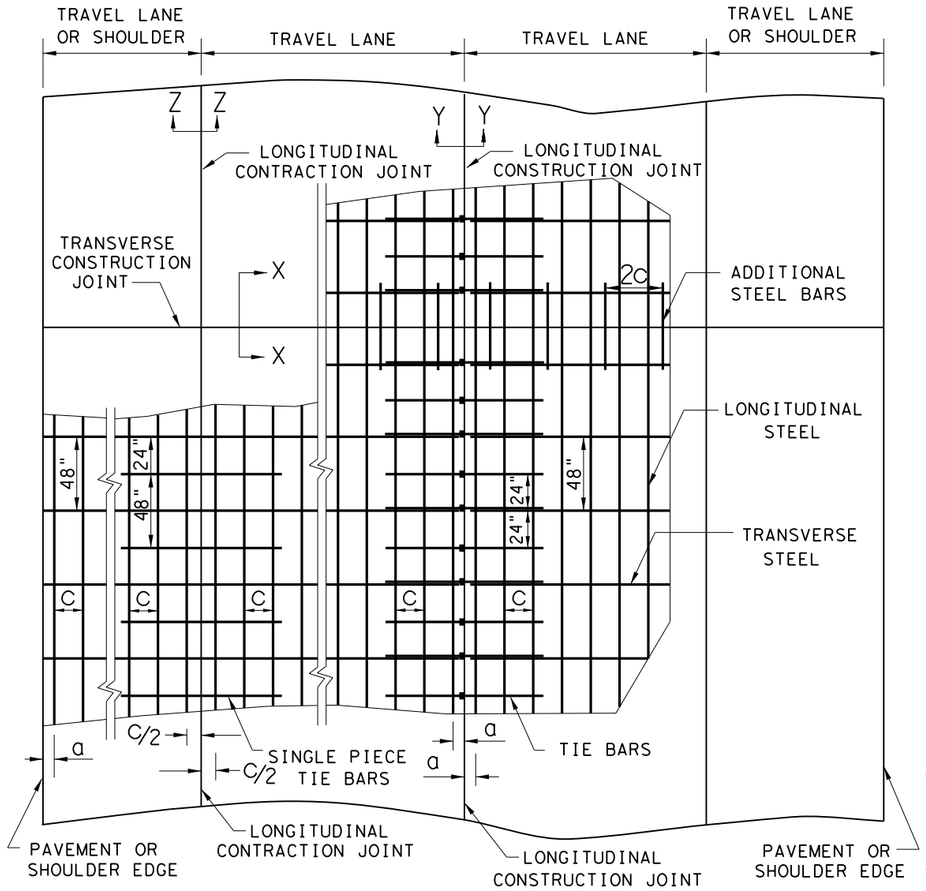

TYPICAL PAVEMENT LAYOUT

PLAN VIEW (NOT TO SCALE)

GENERAL NOTES

1. DETAILS FOR PAVEMENT WIDTH, PAVEMENT THICKNESS AND THE CROWN CROSS-SLOPE SHALL BE SHOWN ELSEWHERE IN THE PLANS. PAVEMENTS WIDER THAN 100 FT. WITHOUT A FREE LONGITUDINAL JOINT ARE NOT COVERED BY THIS STANDARD.
2. USE COARSE AGGREGATES WITH A RATED COEFFICIENT OF THERMAL EXPANSION (CoTE) OF NOT MORE THAN 5.5 X 10^{-6} IN/IN/ °F AS LISTED IN THE CONCRETE RATED SOURCE QUALITY CATALOG (CRSQC).
3. ALL THE REINFORCING STEEL AND TIE BARS SHALL BE DEFORMED STEEL BARS CONFORMING TO ASTM A 615 (GRADE 60) OR ASTM A 996 (GRADE 60) OR ABOVE. STEEL BAR SIZES AND SPACINGS SHALL CONFORM TO TABLE NO. 1 AND TABLE NO. 2.
4. WHEN COARSE AGGREGATE WITH A RATED CoTE OF NOT MORE THAN 4.3 X 10^{-6} IN/IN/ °F IS USED, TABLE NO. 1A MAY BE USED FOR LONGITUDINAL STEEL AS APPROVED BY THE ENGINEER.
5. STEEL BAR PLACEMENT TOLERANCE SHALL BE +/- 1 IN. HORIZONTALLY AND +/- 0.5 IN. VERTICALLY. CALCULATED AVERAGE BAR SPACING (CONCRETE PLACEMENT WIDTH / NUMBER OF LONGITUDINAL BARS) SHALL CONFORM TO TABLE NO. 1 OR TABLE NO. 1A.
6. PAVEMENT WIDTHS OF MORE THAN 15 FT. SHALL HAVE A LONGITUDINAL JOINT (SECTION Z-Z OR SECTION Y-Y). THESE JOINTS SHALL BE LOCATED WITHIN 6 IN. OF THE LANE LINE UNLESS THE JOINT LOCATION IS SHOWN ELSEWHERE ON THE PLANS.
7. THE SAW CUT DEPTH FOR THE LONGITUDINAL CONTRACTION JOINT (SECTION Z-Z) SHALL BE ONE THIRD OF THE SLAB THICKNESS (T/3).
8. WHEN TYING CONCRETE GUTTER AT A LONGITUDINAL JOINT, THE TIE BAR LENGTH OR POSITION MAY BE ADJUSTED. PROVIDE 3 IN. OF CONCRETE COVER FROM THE BACK OF GUTTER TO THE END OF TIE BAR.
9. REPLACE MISSING OR DAMAGED TIE BARS WITHOUT ADDITIONAL COMPENSATION BY DRILLING MIN. 10 IN. DEEP AND GROUTING TIE BARS WITH TYPE III, CLASS C EPOXY. MEET THE PULL-OUT TEST REQUIREMENTS IN ITEM 361.
10. OMIT TIE BARS LOCATED WITHIN 18-IN. OF THE TRANSVERSE CONSTRUCTION JOINTS (SECTION X-X). USE HAND-OPERATED IMMERSION VIBRATORS TO CONSOLIDATE THE CONCRETE ADJACENT TO ALL FORMED JOINTS.
11. LONGITUDINAL REINFORCING STEEL SPLICES SHALL BE A MINIMUM OF 25 IN. STAGGER THE LAP LOCATIONS SO THAT NO MORE THAN 1/3 OF THE LONGITUDINAL STEEL IS SPLICED IN ANY GIVEN 12-FT. WIDTH AND 2-FT. LENGTH OF THE PAVEMENT.
12. THE DETAIL FOR THE JOINT SEALANT AND RESERVOIR IS SHOWN ON STANDARD SHEET "CONCRETE PAVING DETAILS, JOINT SEALS."

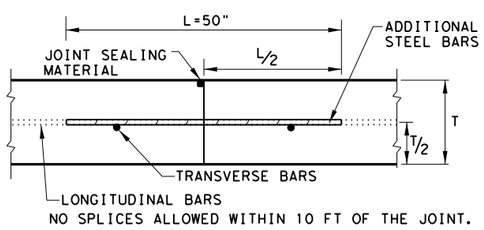

TRANSVERSE CONSTRUCTION JOINT

SECTION X - X

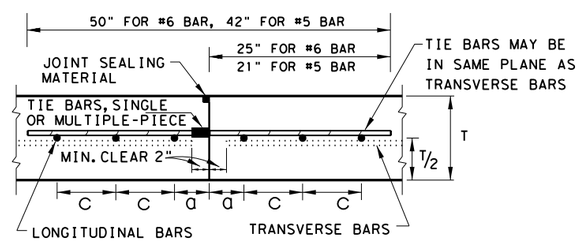

LONGITUDINAL CONSTRUCTION JOINT

SECTION Y - Y

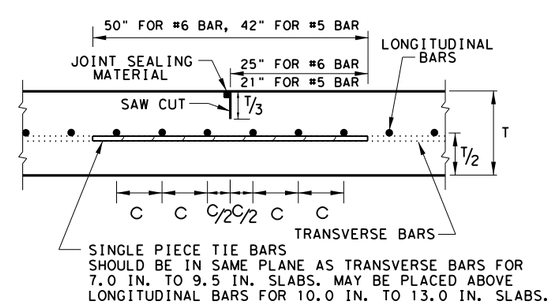

LONGITUDINAL CONTRACTION JOINT

SECTION Z - Z

SHEET 1 OF 2

Texas Department of Transportation — Design Division Standard

CONTINUOUSLY REINFORCED CONCRETE PAVEMENT

ONE LAYER STEEL BAR PLACEMENT T - 7 to 13 INCHES

CRCP(1)-17

FILE: crcp117.dgn	DN: TxDOT	CK: AN	DW: HC	CK: VP/KM
© TxDOT: May 2017	CONT	SECT	JOB	HIGHWAY
REVISIONS 10/10/2011 ADD GN #12 04/09/2013 REMOVE 6" AND 6.5" ADD CTE REQUIREMENTS 05/05/2017 CoTE AS RATED 4.3	DIST		COUNTY	SHEET NO.

DATE:
FILE:

DISCLAIMER:
The use of this standard is governed by the "Texas Engineering Practice Act". No warranty of any kind is made by TxDOT for any purpose whatsoever. TxDOT assumes no responsibility for the conversion of this standard to other formats or for incorrect results or damages resulting from its use.

TABLE NO. 1A LONGITUDINAL STEEL FOR LOW CoTE CONCRETE AS APPROVED BY THE ENGINEER

SLAB THICKNESS AND BAR SIZE		REGULAR STEEL BARS	FIRST SPACING AT EDGE OR JOINT	ADDITIONAL STEEL BARS AT TRANSVERSE CONSTRUCTION JOINT (SECTION X-X)	
T (IN.)	BAR SIZE	SPACING c (IN.)	SPACING a (IN.)	SPACING 2 x c (IN.)	LENGTH L (IN.)
7.0	#5	7.5	3 TO 4	15	50
7.5	#5	7.0	3 TO 4	14	50
8.0	#6	10.0	3 TO 4	20	50
8.5	#6	9.5	3 TO 4	19	50
9.0	#6	9.0	3 TO 4	18	50
9.5	#6	8.5	3 TO 4	17	50
10.0	#6	8.0	3 TO 4	16	50
10.5	#6	7.5	3 TO 4	15	50
11.0	#6	7.0	3 TO 4	14	50
11.5	#6	6.75	3 TO 4	13.5	50
12.0	#6	6.50	3 TO 4	13	50
12.5	#6	6.25	3 TO 4	12.5	50
13.0	#6	6.0	3 TO 4	12	50

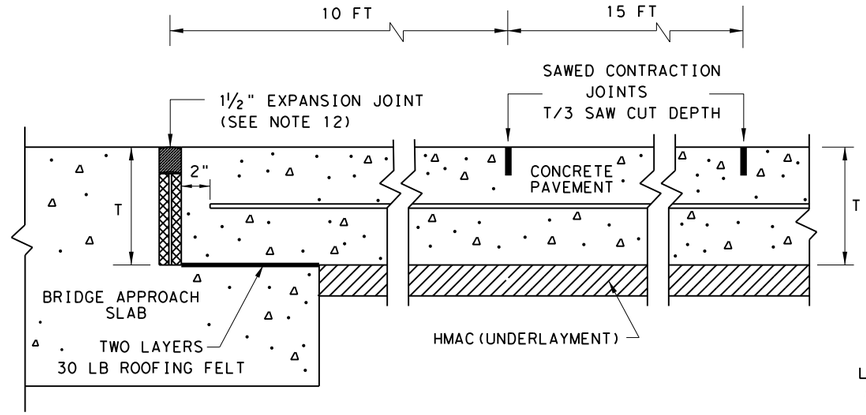

TRANSVERSE EXPANSION JOINT DETAIL
AT BRIDGE APPROACH

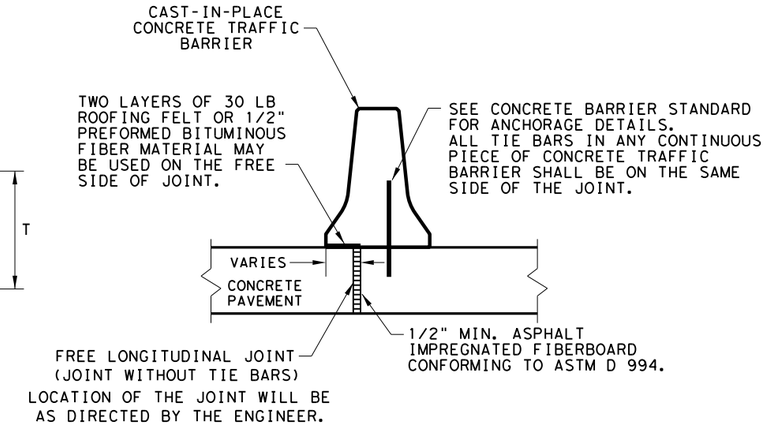

FREE LONGITUDINAL JOINT DETAIL

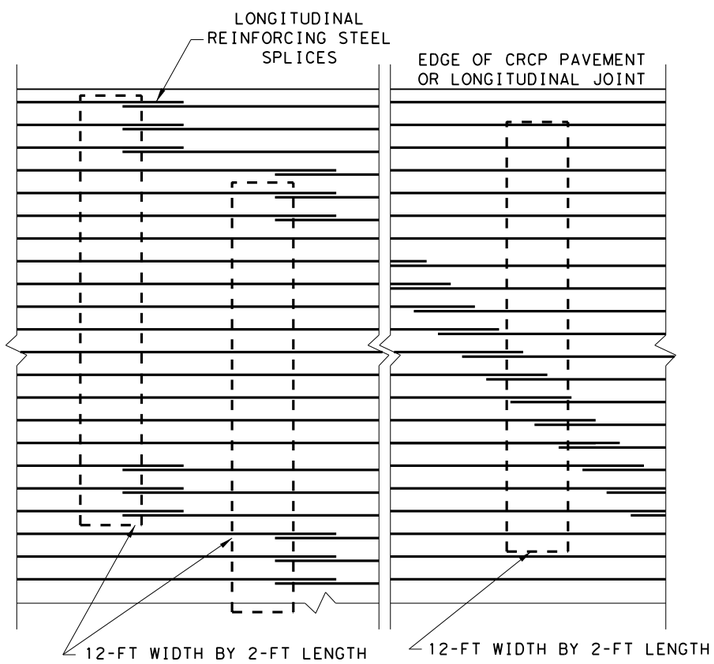

STAGGER THE LAP LOCATIONS SO THAT NO MORE THAN 1/3 OF THE LONGITUDINAL STEEL IS SPLICED IN ANY GIVEN 12-FT. WIDTH AND 2-FT. LENGTH OF THE PAVEMENT. ANY OTHER LAP CONFIGURATION MEETING THIS REQUIREMENT WILL BE ALLOWED.

EXAMPLES OF LAP CONFIGURATION
PLAN VIEW (NOT TO SCALE)

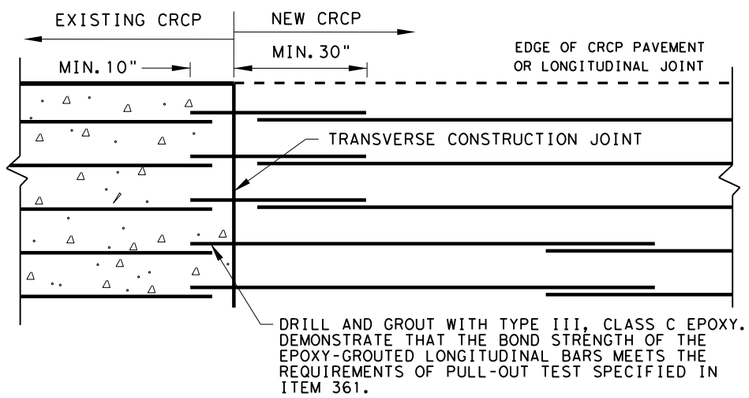

OPTION A: DRILL AND EPOXY
PLAN VIEW (NOT TO SCALE)

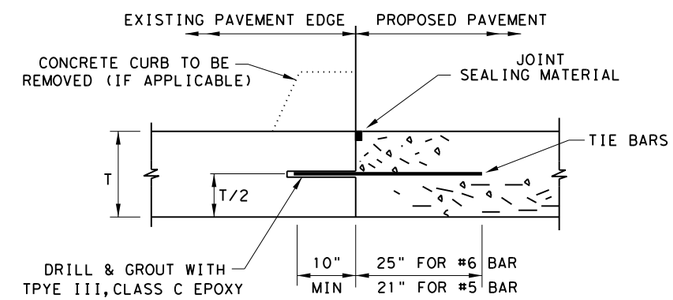

1. BEFORE WIDENING WORK, DEMONSTRATE THAT THE BOND STRENGTH OF THE EPOXY-GROUTED TIE BARS MEETS THE REQURIMENTS OF PULL-OUT TEST SPECIFIED IN ITEM 361.
2. SPACE TIE BARS AT 24" SPACING. USE #6 TIE BARS FOR 8" AND THICKER SLABS, USE #5 TIE BARS FOR LESS THAN 8" THICK SLABS.

LONGITUDINAL WIDENING JOINT DETAIL

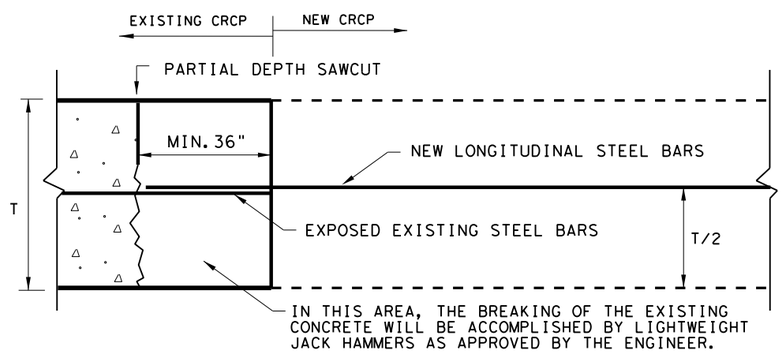

OPTION B: BREAKBACK AND LAP

TRANSVERSE TIE JOINT DETAIL
EXISTING CRCP TO NEW CRCP

SHEET 2 OF 2

Texas Department of Transportation — Design Division Standard

CONTINUOUSLY REINFORCED CONCRETE PAVEMENT

ONE LAYER STEEL BAR PLACEMENT
T - 7 to 13 INCHES

CRCP(1)-17

FILE: crcp117.dgn	DN: TxDOT	CK: AN	DW: HC	CK: VP/KM
© TxDOT: May 2017	CONT	SECT	JOB	HIGHWAY
REVISIONS	DIST	COUNTY		SHEET NO.

DATE:
FILE:

DISCLAIMER:
The use of this standard is governed by the "Texas Engineering Practice Act". No warranty of any kind is made by TxDOT for any purpose whatsoever. TxDOT assumes no responsibility for the conversion of this standard to other formats or for incorrect results or damages resulting from its use.

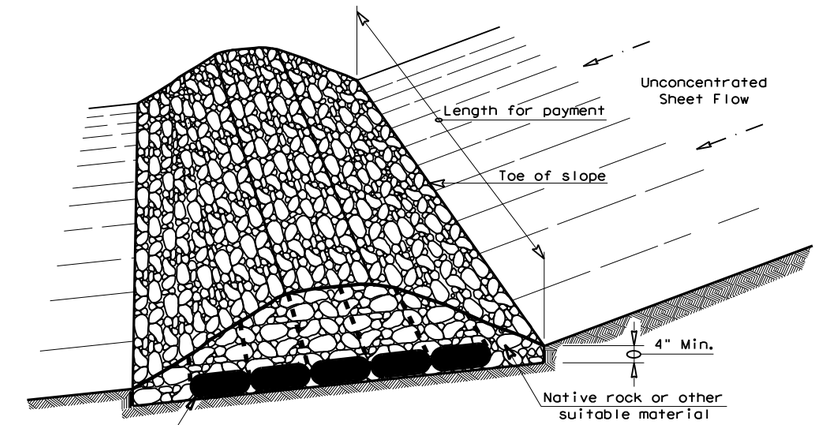

FILTER DAM AT TOE OF SLOPE

RFD1

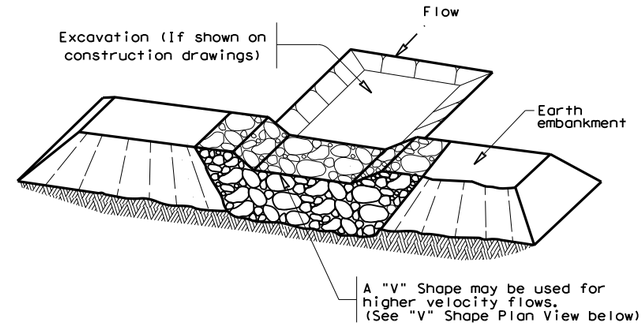

FILTER DAM AT SEDIMENT TRAP

RFD1 OR RFD2

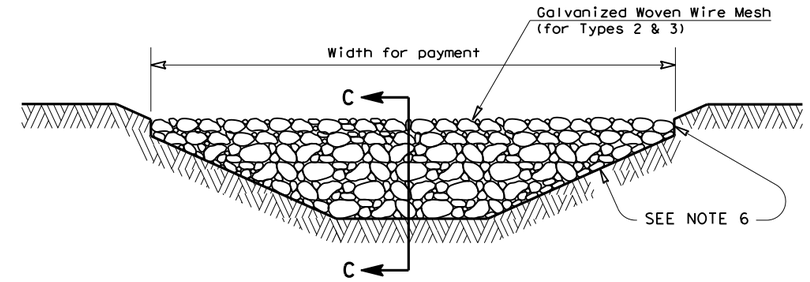

FILTER DAM AT CHANNEL SECTIONS

RFD1 OR RFD2 OR RFD3

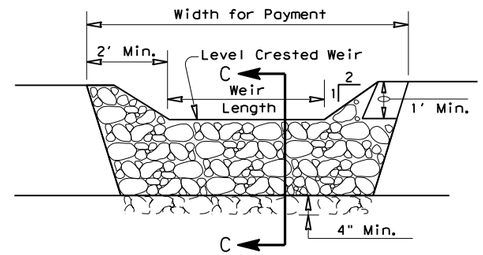

PROFILE

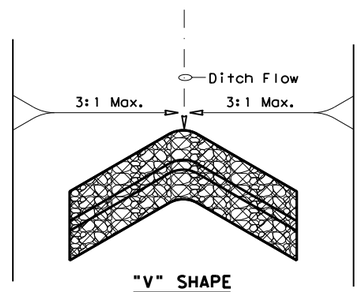

"V" SHAPE
PLAN VIEW

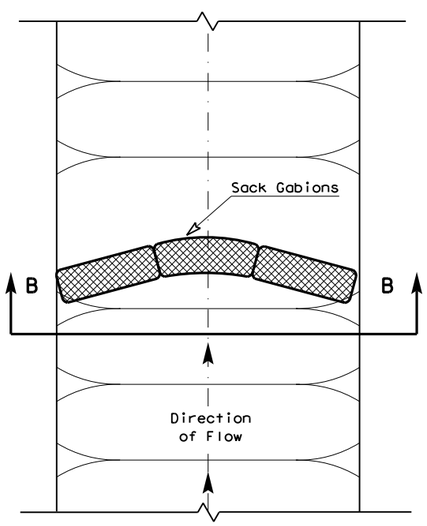

PLAN VIEW

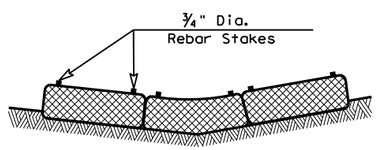

SECTION B-B

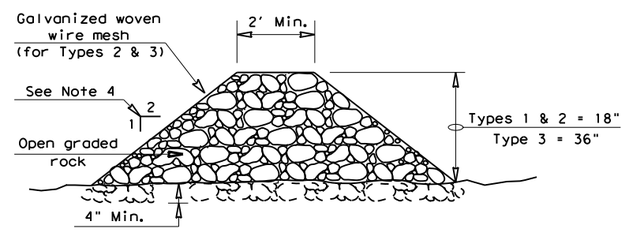

SECTION C-C

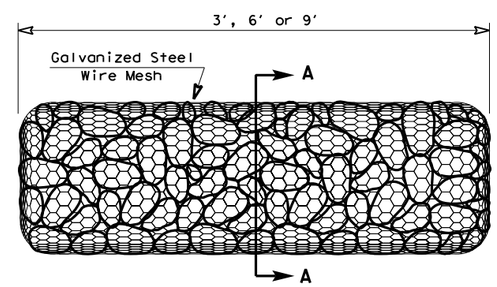

TYPE 4 (SACK GABIONS)

RFD4

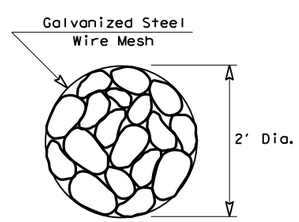

SECTION A-A

ROCK FILTER DAM USAGE GUIDELINES

Rock Filter Dams should be constructed downstream from disturbed areas to intercept sediment from overland runoff and/or concentrated flow. The dams should be sized to filter a maximum flow through rate of 60 GPM/FT^2 of cross sectional area. A 2 year storm frequency may be used to calculate the flow rate.

Type 1 (18" high with no wire mesh) (3" to 6" aggregate): Type 1 may be used at the toe of slopes, around inlets, in small ditches, and at dike or swale outlets. This type of dam is recommended to control erosion from a drainage area of 5 acres or less. Type 1 may not be used in concentrated high velocity flows (approximently 8 Ft/Sec or more) in which aggregate wash out may occur. Sandbags may be used at the embedded foundation (4" deep min.) for better filtering efficiency of low flows if called for on the plans or directed by the Engineer.

Type 2 (18" high with wire mesh) (3" to 6" aggregate): Type 2 may be used in ditches and at dike or swale outlets.

Type 3 (36" high with wire mesh) (4" to 8" aggregate): Type 3 may be used in stream flow and should be secured to the stream bed.

Type 4 (Sack gabions) (3" to 6" aggregate): Type 4 May be used in ditches and smaller channels to form an erosion control dam.

Type 5: Provide rock filter dams as shown on plans.

GENERAL NOTES

1. If shown on the plans or directed by the Engineer, filter dams should be placed near the toe of slopes where erosion is anticipated, upstream and/or downstream at drainage structures, and in roadway ditches and channels to collect sediment.
2. Materials (aggregate, wire mesh, sandbags, etc.) shall be as indicated by the specification for "Rock Filter Dams for Erosion and Sedimentation Control".
3. The rock filter dam dimensions shall be as indicated on the SW3P plans.
4. Side slopes should be 2:1 or flatter. Dams within the safety zone shall have sideslopes of 6:1 or flatter.
5. Maintain a minimum of 1' between top of rock filter dam weir and top of embankment for filter dams at sediment traps.
6. Filter dams should be embedded a minimum of 4" into existing ground.
7. The sediment trap for ponding of sediment laden runoff shall be of the dimensions shown on the plans.
8. Rock filter dam types 2 & 3 shall be secured with 20 gauge galvanized woven wire mesh with 1" diameter hexagonal openings. The aggregate shall be placed on the mesh to the height & slopes specified. The mesh shall be folded at the upstream side over the aggregate and tightly secured to itself on the downstream side using wire ties or hog rings. For in stream use, the mesh should be secured or staked to the stream bed prior to aggregate placement.
9. Sack Gabions should be staked down with ¾" dia. rebar stakes, and have a double-twisted hexagonal weave with a nominal mesh opening of 2 ½" x 3 ¼"
10. Flow outlet should be onto a stabilized area (vegetation, rock, etc.).
11. The guidelines shown hereon are suggestions only and may be modified by the Engineer.

PLAN SHEET LEGEND

Type 1 Rock Filter Dam	RFD1
Type 2 Rock Filter Dam	RFD2
Type 3 Rock Filter Dam	RFD3
Type 4 Rock Filter Dam	RFD4

Texas Department of Transportation — Design Division Standard

TEMPORARY EROSION, SEDIMENT AND WATER POLLUTION CONTROL MEASURES

ROCK FILTER DAMS

EC(2)-16

FILE: ec216	DN: TxDOT	CK: KM	DW: VP	DN/CK: LS
© TxDOT: JULY 2016	CONT	SECT	JOB	HIGHWAY
REVISIONS				
	DIST	COUNTY		SHEET NO.

DATE:
FILE:

DISCLAIMER:
The use of this standard is governed by the "Texas Engineering Practice Act". No warranty of any kind is made by TxDOT for any purpose whatsoever. TxDOT assumes no responsibility for the conversion of this standard to other formats or for incorrect results or damages resulting from its use.

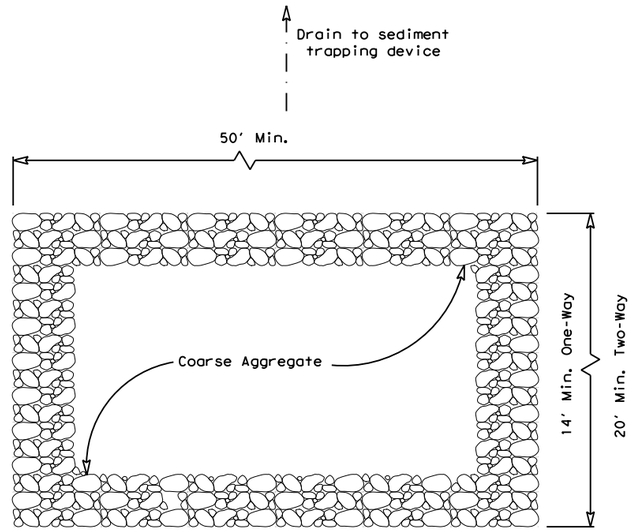

PLAN VIEW

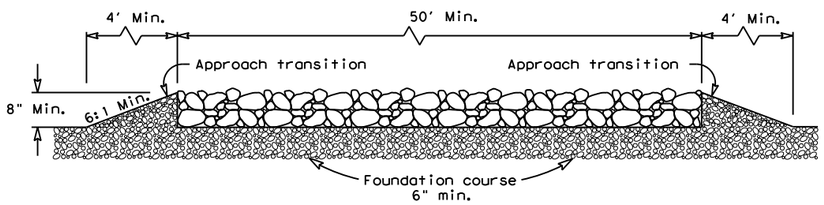

ELEVATION VIEW

CONSTRUCTION EXIT (TYPE 1)

ROCK CONSTRUCTION (LONG TERM)

GENERAL NOTES (TYPE 1)

1. The length of the type 1 construction exit shall be as indicated on the plans, but not less than 50'.
2. The coarse aggregate should be open graded with a size of 4" to 8".
3. The approach transitions should be no steeper than 6:1 and constructed as directed by the Engineer.
4. The construction exit foundation course shall be flexible base, bituminous concrete, portland cement concrete or other materialas approved by the Engineer.
5. The construction exit shall be graded to allow drainage to a sediment trapping device.
6. The guidelines shown hereon are suggestions only and may be modified by the Engineer.
7. Construct exits with a width of at least 14 ft. for one-way and 20 ft. for two-way traffic for the full width of the exit, or as directed by the engineer.

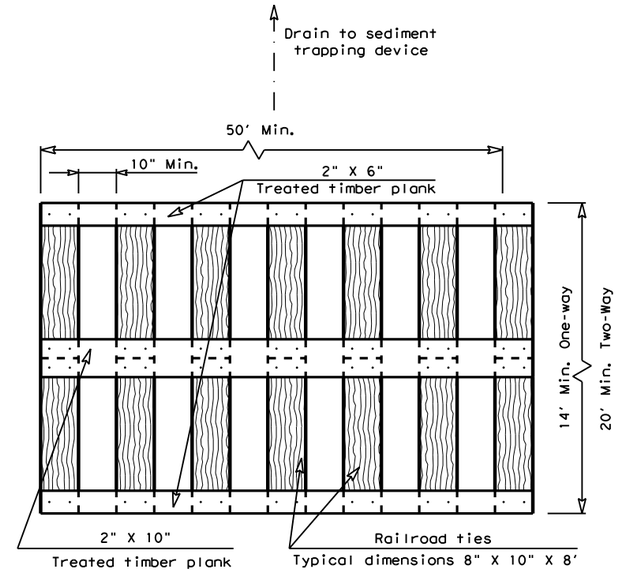

PLAN VIEW

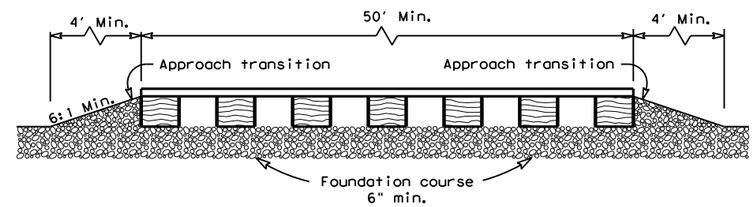

ELEVATION VIEW

CONSTRUCTION EXIT (TYPE 2)

TIMBER CONSTRUCTION (LONG TERM)

GENERAL NOTES (TYPE 2)

1. The length of the type 2 construction exit shall be as indicated on the plans, but not less than 50'.
2. The treated timber planks shall be attached to the railroad ties with ½"x 6" min. lag bolts. Other fasteners may be used as approved by the Engineer.
3. The treated timber planks shall be #2 grade min., and should be free from large and loose knots.
4. The approach transitions shall be no steeper than 6:1 and constructed as directed by the Engineer.
5. The construction exit foundation course shall be flexible base, bituminous concrete, portland cement concrete or other material as approved by the Engineer.
6. The construction exit should be graded to allow drainage to a sediment trapping device.
7. The guidelines shown hereon are suggestions only and may be modified by the Engineer.
8. Construct exits with a width of at least 14 ft. for one-way and 20 ft. for two-way traffic for the full width of the exit, or as directed by the engineer.

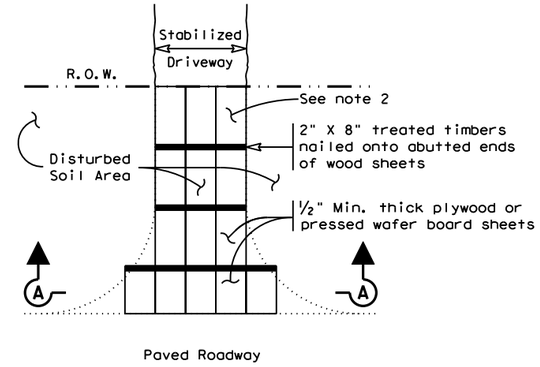

PLAN VIEW

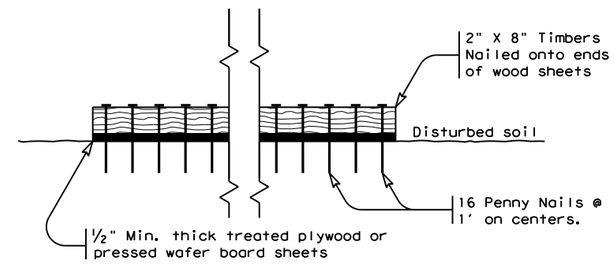

SECTION A-A

CONSTRUCTION EXIT (TYPE 3)

SHORT TERM

GENERAL NOTES (TYPE 3)

1. The length of the type 3 construction exit shall be as shown on the plans, or as directed by the Engineer.
2. The type 3 construction exit may be constructed from open graded crushed stone with a size of two to four inches spread a min. of 4" thick to the limits shown on the plans.
3. The treated timber planks shall be #2 grade min., and should be free from large and loose knots.
4. The guidelines shown hereon are suggestions only and may be modified by the Engineer.

Texas Department of Transportation — Design Division Standard

TEMPORARY EROSION, SEDIMENT AND WATER POLLUTION CONTROL MEASURES

CONSTRUCTION EXITS

EC(3)-16

FILE: ec316	DN: TxDOT	CK: KM	DW: VP	DN/CK: LS
©TxDOT: JULY 2016	CONT	SECT	JOB	HIGHWAY
REVISIONS	C	S	J	HWY
	DIST		COUNTY	SHEET NO.
	DST		CTY	$EC(3)A-16$

DATE: $DATE$
FILE: $FILE$

DISCLAIMER:
The use of this standard is governed by the "Texas Engineering Practice Act". No warranty of any kind is made by TxDOT for any purpose whatsoever. TxDOT assumes no responsibility for the conversion of this standard to other formats or for incorrect results or damages resulting from its use.

METHOD B: JOINT SEALING COMPOUND

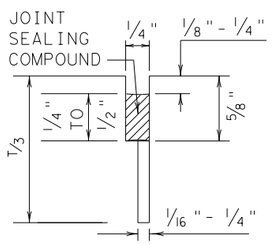

LONGITUDINAL SAWED
CONTRACTION JOINT

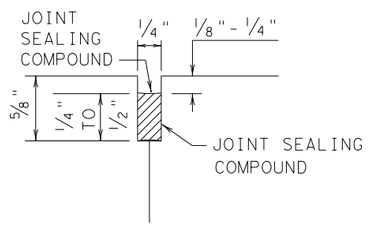

LONGITUDINAL OR TRANSVERSE
CONSTRUCTION JOINT

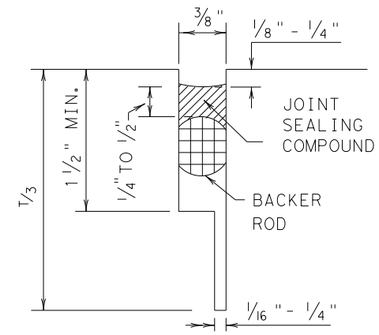

TRANSVERSE SAWED
CONTRACTION JOINT

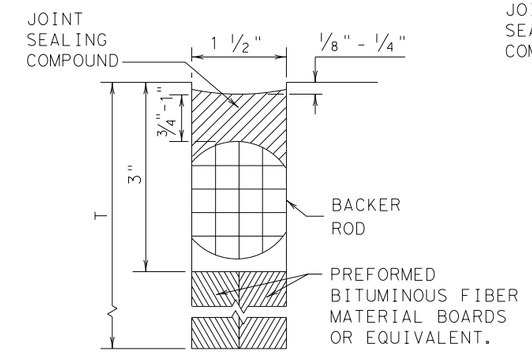

TRANSVERSE FORMED
EXPANSION JOINT

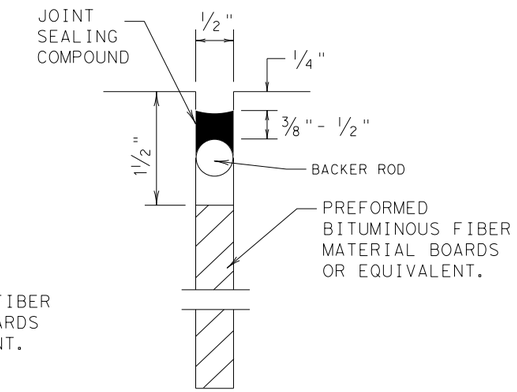

FORMED
ISOLATION JOINT

METHOD A: PREFORMED COMPRESSION SEALS (PCS)(DMS-6310 CLASS 6)

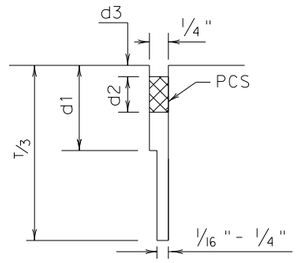

LONGITUDINAL SAWED
CONTRACTION JOINT

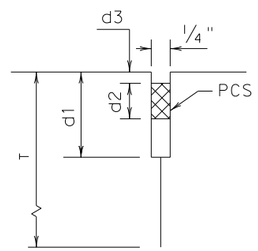

LONGITUDINAL
CONSTRUCTION JOINT

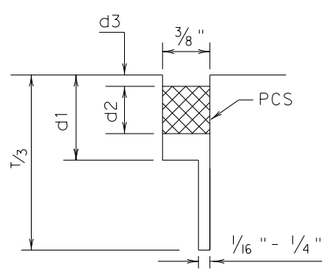

TRANSVERSE SAWED
CONTRACTION JOINT

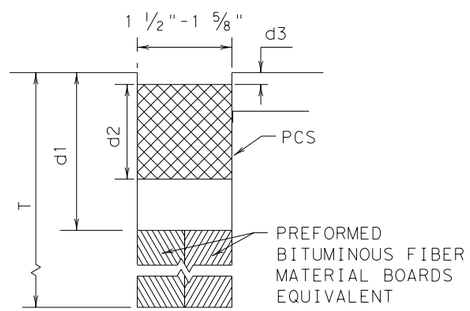

TRANSVERSE FORMED
EXPANSION JOINT

GENERAL NOTES

1. UNLESS OTHERWISE SHOWN IN THE PLANS, EITHER METHOD "A" OR METHOD "B" MAY BE USED.
2. THE LOCATION OF JOINTS SHALL BE AS SHOWN ELSEWHERE IN THE PLANS.
3. THE JOINT RESERVOIR FOR SEALANT OR PCS SHALL BE SAWED UNLESS OTHERWISE SHOWN ON THE PLANS FOR THE LONGITUDINAL AND TRANSVERSE CONSTRUCTION JOINTS AND THE SAWED JOINTS.
4. DIMENSIONS d1, d2, AND d3 SHOWN IN METHOD A SHALL BE IN ACCORDANCE WITH THE PREFORMED COMPRESSION SEAL MANUFACTURER'S RECOMMENDATION.
5. REFER TO DMS-6310 "JOINT SEALANTS AND FILLERS" FOR THE CLASSIFICATIONS.
6. FOR SAWED LONGITUDINAL JOINT, LONGITUDINAL OR TRANSVERSE CONSTRUCTION JOINT, USE JOINT SEALANT CLASS 5 OR 8 UNLESS OTHERWISE SHOWN ON THE PLAN OR APPROVED.
7. FOR TRANSVERSE SAWED CONTRACTION, TRANSVERSE FORMED EXPANSION JOINT, AND ISOLATION JOINT USE JOINT SEALANT CLASS 5 OR 8 AT NEW JOINTS. USE JOINT SEALANT CLASS 4,5,7,OR 8 FOR MAINTAINING EXISTING JOINTS.
8. THE JOINTS SHALL BE CLEANED IN ACCORDANCE WITH THE ITEM 438 "CLEANING AND SEALING JOINTS" OR ITEM 713 "CLEANING AND SEALING JOINTS AND CRACKS (CONCRETE PAVEMENT)".
9. ISOLATION JOINTS ACCOMMODATE HORIZONTAL AND VERTICAL MOVEMENTS THAT OCCUR BETWEEN A PAVEMENT AND A STRUCTURE. ISOLATION JOINTS MAY BE USED FOR BRIDGE ABUTMENTS, INTERSECTIONS, CURB AND GUTTER, OLD AND NEW PAVEMENTS, OR AROUND DRAINAGE INLETS, MANHOLES, FOOTINGS AND LIGHTING STRUCTURES.

Texas Department of Transportation | Design Division Standard

CONCRETE PAVING DETAILS

JOINT SEALS

JS-14

FILE: js14.dgn	DN: TxDOT	DN: HC	DW: HC	CK: AN
©TxDOT: DECEMBER 2014	CONT	SECT	JOB	HIGHWAY
REVISIONS				
	DIST	COUNTY		SHEET NO.

DATE:
FILE:

DISCLAIMER:
The use of this standard is governed by the "Texas Engineering Practice Act". No warranty of any kind is made by TxDOT for any purpose whatsoever. TxDOT assumes no responsibility for the conversion of this standard to other formats or for incorrect results or damages resulting from its use.

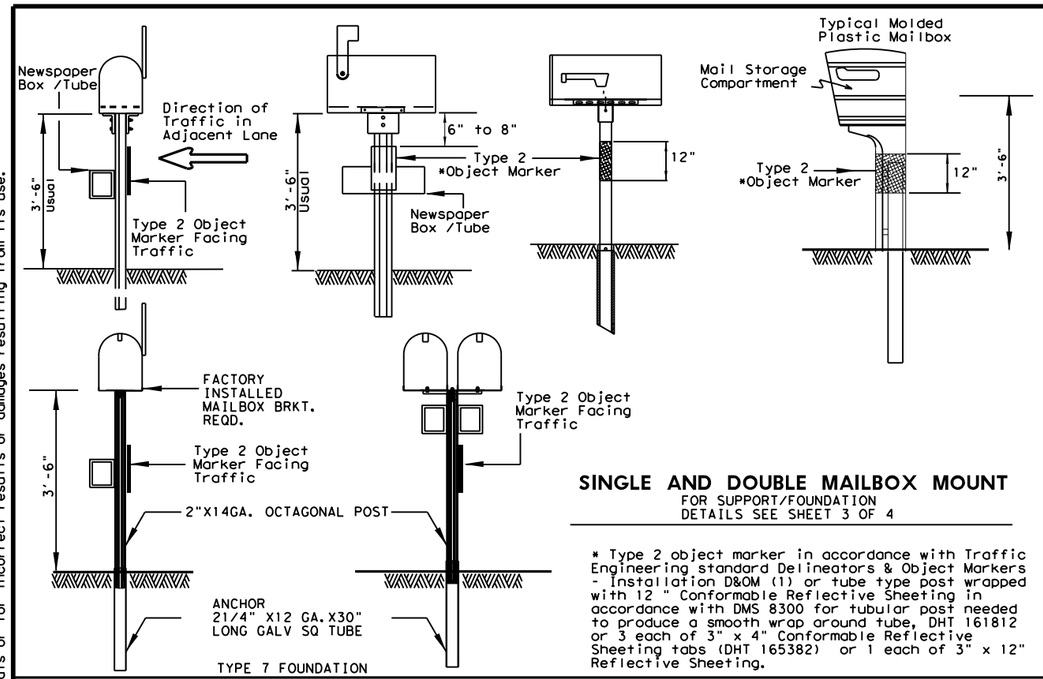

SINGLE AND DOUBLE MAILBOX MOUNT

FOR SUPPORT/FOUNDATION DETAILS SEE SHEET 3 OF 4

* Type 2 object marker in accordance with Traffic Engineering standard Delineators & Object Markers - Installation D&OM (1) or tube type post wrapped with 12 " Conformable Reflective Sheeting in accordance with DMS 8300 for tubular post needed to produce a smooth wrap around tube, DHT 161812 or 3 each of 3" x 4" Conformable Reflective Sheeting tabs (DHT 165382) or 1 each of 3" x 12" Reflective Sheeting.

Note: Mailbox installations in sidewalk areas shall be in accordance with the latest TxDOT Pedestrian Facilities Curb ramps standard *PED-XX for pedestrian facilities.

*PED-XX: XX is the standard year for example PED- 12 , PED-13,etc.

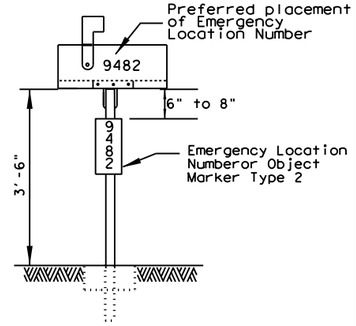

PLACEMENT OF EMERGENCY LOCATION NUMBER

Location Number shall be placed on: 1. A yellow, type A plate with class 1 flat surface reflective sheeting in accordance with DMS 8600. The color of numbers shall be black. or 2: A green or blue plate with white numbers attached to post beside the object marker. Other contrasting color configuration, as approved , may be used. (Use Same type plate as used for the type 2 Object Marker. Recommended sign size is 6" by 15")

TYPICAL MAILBOX SIZE				LIGHT WEIGHT MATERIAL	
				SHEET METAL	**PLASTIC
SIZE	LENGTH	WIDTH	HEIGHT	MAXIMUM WEIGHT	
	INCHES			POUNDS	
SMALL	19 1/2	6	7	5	5
MEDIUM	22 1/2	8	11 1/2	7	7
LARGE	23 1/2*	11 1/2*	13 1/2*	10	10

* Maximum allowed dimensions for mailbox
** Excluding Molded Plastic on 4 X 4 Post

LOCKABLE ARCHITECTURAL MAILBOX SIZE (INCHES)					
VIEW	TOP	BOTTOM	FRONT SIDE	BACK SIDE	WEIGHT
SIDE	18	15	18.3	15	(POUNDS)
BACK	11 1/2	11 1/2		15	22.4

SEE TOP RIGHT CORNER OF SHEET 2 OF 4

MAILBOX SIZES

Mailboxes shall be made of light weight sheet metal or light weight plastic.
Lockable architectural mailboxes shall meet the requirements of the above table.

Heavy steel, cast iron or decorative mailboxes shall not be used on the state highway system.

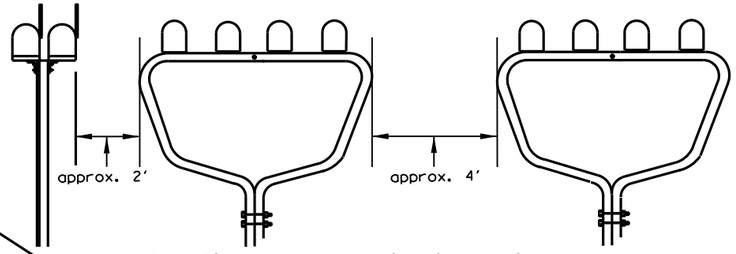

4' Clear Distance between multiple installations and 2' clearance between double or single installations and the multiple installation. DHT #'s 164116 or 149339.

MULTIPLE MAILBOX PLACEMENT

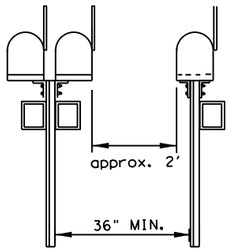

Clear Distance between single or double mounted posts. (Normally when 3 or more mailboxes are in one location, a multiple support is used).

SINGLE & DOUBLE MAILBOX PLACEMENT

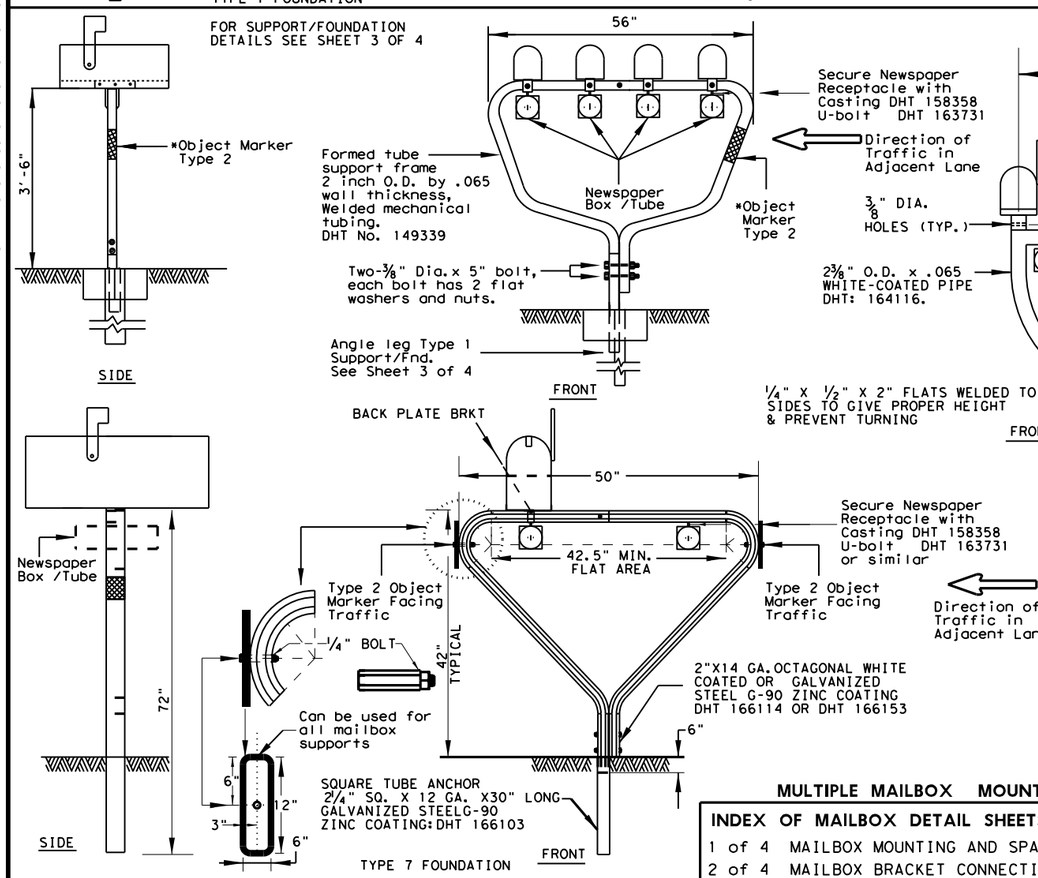

MULTIPLE MAILBOX MOUNT

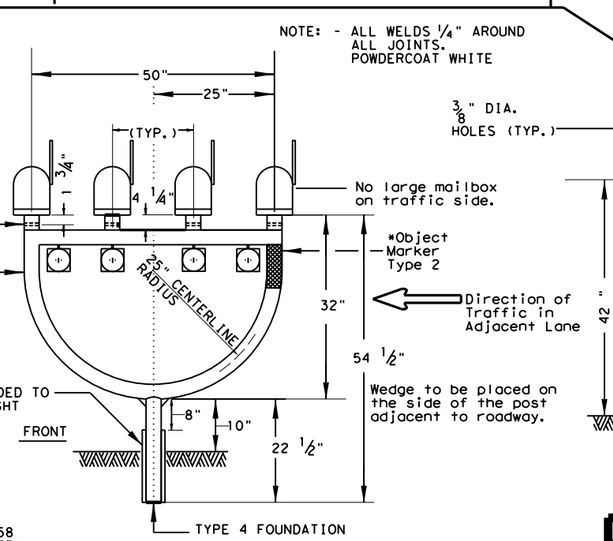

DOUBLE AND MULTIPLE MAILBOX MOUNT

FOR SUPPORT/FOUNDATION DETAILS SEE SHEET 3 OF 4
FOR DHT NUMBERS SEE SHEET 4 OF 4

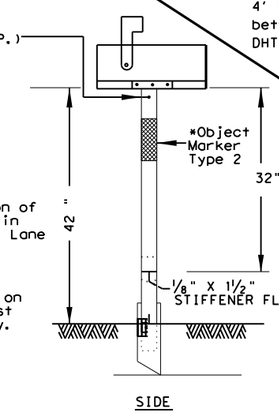

NEWSPAPER RECEPTACLE

A light weight receptacle for newspaper delivery can be attached to mailbox posts as shown on this page if the receptacle:

- Does not touch the mailbox.
- Does not present a hazard to traffic or delivery of the mail.
- Does not extend beyond the front of the mailbox.
- Does not display advertising, except the publication title.
- Newspaper receptacles on separate supports are prohibited.

INDEX OF MAILBOX DETAIL SHEETS

1 of 4 MAILBOX MOUNTING AND SPACING
2 of 4 MAILBOX BRACKET CONNECTING DETAILS
3 Of 4 MAILBOX SUPPORT / FOUNDATION
4 of 4 TABLE OF DHT NUMBERS

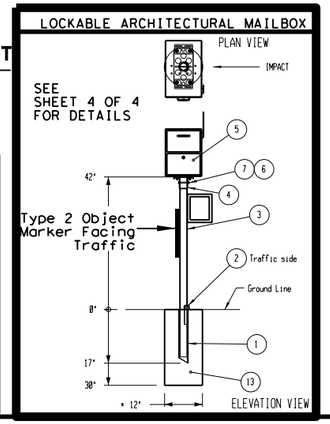

SHEET 1 OF 4

Texas Department of Transportation — Maintenance Division Standard

MAILBOX MOUNTING AND SPACING

MB-15(1)

FILE: MB14(1).DGN	DN: JEO	CK: JEO	DW:	CK:
© TxDOT APRIL 2015	CONT	SECT	JOB	HIGHWAY
REVISIONS: Added additional newspaper receptacle for double mailbox support	DIST		COUNTY	SHEET NO.

DISCLAIMER:
The use of this standard is governed by the "Texas Engineering Practice Act". No warranty of any kind is made by TxDOT for any purpose whatsoever. TxDOT assumes no responsibility for the conversion of this standard to other formats or for incorrect results or damages resulting from its use.

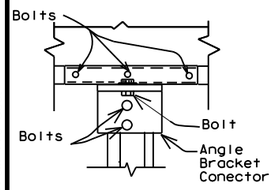

For bolt sizes see details below for "SMALL MAILBOX" and "MEDIUM AND LARGE MAILBOXES"

SINGLE MAILBOX

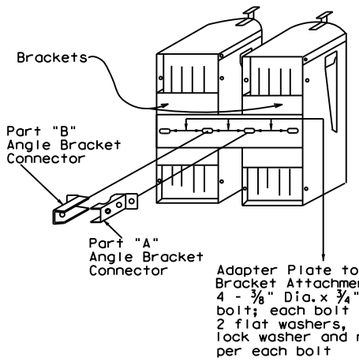

(Not permitted for Large Mailboxes)

DOUBLE MAILBOX

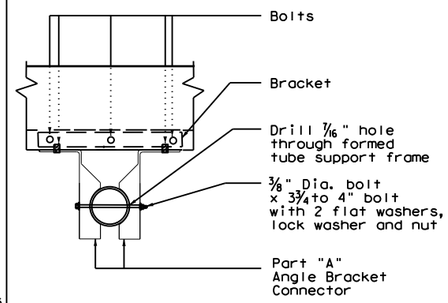

MULTIPLE MAILBOX

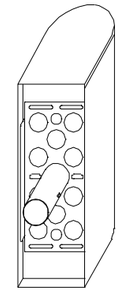

To be used with 2 3/8" OD RR or thinwall Steel posts.

WELDED SINGLE MAILBOXBRACKET

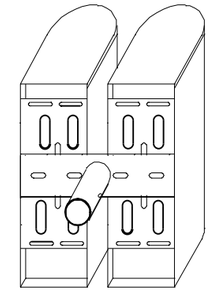

To be used with thinwall Steel posts. Not to be used with RR posts.

WELDED DOUBLE MAILBOX BRACKET WITHADAPTER PLATE

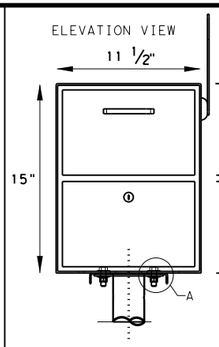

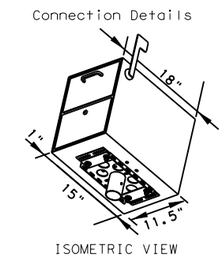

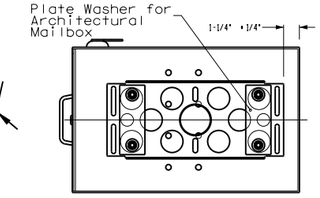

Preferred placement of Emergency Location Number

X~5.25" min; Y~5.75" min

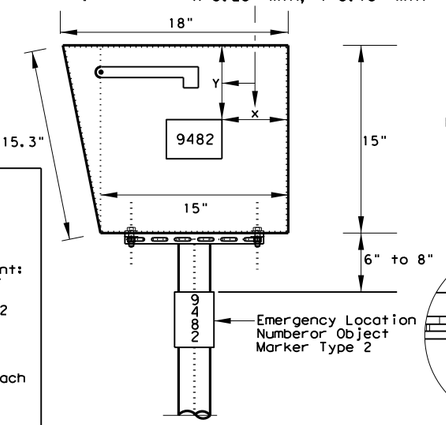

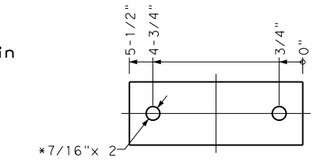

Plate Washer for Architectural Mailbox Plate, 2" x 1/8" ASTM A36 Steel

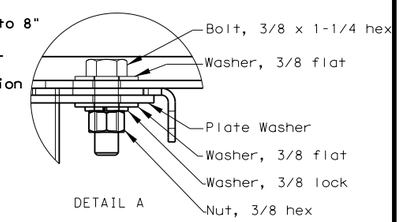

LOCKABLE ARCHITECTURAL MAILBOX CONNECTION DETAILS

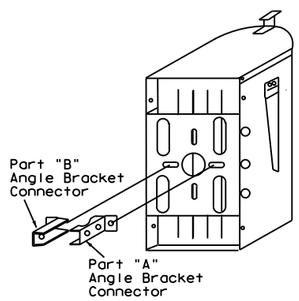

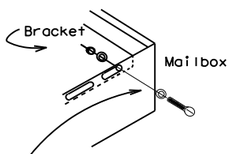

Bracket to mailbox attachment: 6 - 1/4" Dia. x 3/4" bolt w/ 2 flat washers and nut per each bolt.

Angle to bracket attachment: 2 - 3/8" Dia. x 3/4" bolt with 2 flat washers, lock washer and nut per each bolt.

Angle to 2 - 3/8" Dia. x 2 1/2" bolt with 2 flat washers, lock washer and nut per each bolt.

SMALL MAILBOX

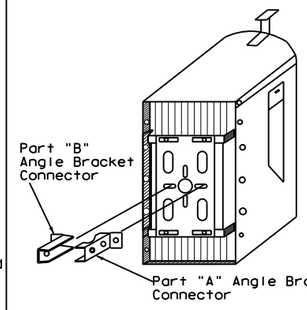

Use both Parts "A" and "B" Angle Bracket Connectors for Winged Channel Posts

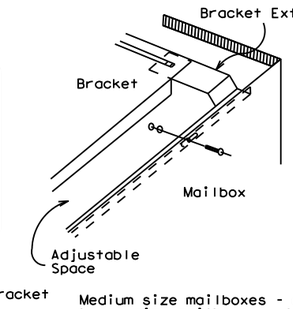

Bracket to mailbox attachment: 6 - 1/4" Dia. x 3/4" bolt w/2 flat washers and nut per each bolt.

Bracket to bracket extension attachment: 2 - 1/4" Dia. x 3/4" carriage bolt w/ flat washer, lock washer and nut per bolt (4 bolts required if 2 bracket extensions are used).

Angle to bracket attachment: 2 - 3/8" Dia. x 3/4" bolt w/2 flat washers, lock washer and nut per each bolt.

Angle to mailbox support attachment: 2 - 3/8" Dia. x 2 1/2" bolt w/2 flat washers, lock washer, and nut per each bolt.

Medium size mailboxes - one extension bracket
Large size mailboxes - two extension brackets

MEDIUM AND LARGE MAILBOXES

GENERAL NOTES

1. Connecting hardware detailed on this sheet is for the hardware that the Department stocks at the Regional Warehouses. This hardware is available to the contractor only when so stated elsewhere in the plans or specification.
2. Hardware for mounting mailboxes to the support/foundation furnished by industry should be used when shown on the Maintenance Divisions "Approved Products List." Only mailbox hardware that have been crash tested in accordance with NCHRP Report 350, will be on the approved list.
3. Hardware furnished by industry shall be erected in accordance with the manufacturer's recommendation.
4. Bracket and bracket extension shall be constructed of 14 gauge galvanized steel sheet metal.
5. The angles, brackets and adapter plates shall be constructed of 12 gauge galvanized steel sheet metal.
6. Items with evidence of damage to the galvanized coating or wet storage stains (white rust) will not be accepted.

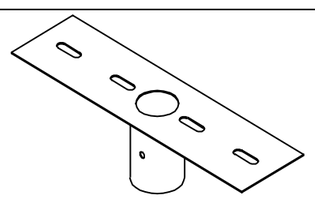

DHT 162323

For use with galvanized thinwall steel posts DHT # 143426 or powder-coated thinwall steel post DHT # 162911.

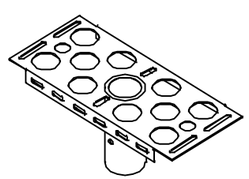

DHT 161443

For use with RCR post DHT # 161442 or galvanized thinwall steel post DHT # 143426 or powder-coated thinwall steel post. DHT # 162911.

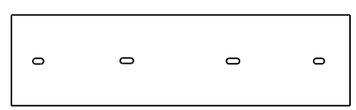

DHT #3789

Used for mounting two Mailboxes on the same post.

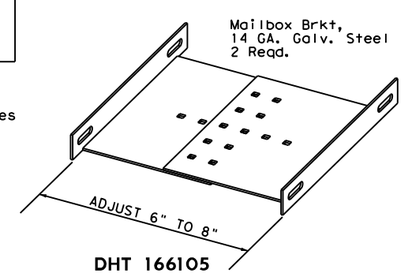

DHT 166105

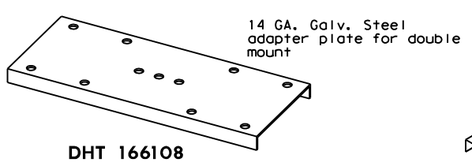

DHT 166108

HARDWARE AT TXDOT REGIONAL WAREHOUSES

Brackets and adapter plate shown in this section should be available to the Contractor when stated elsewhere in plans or specifications.

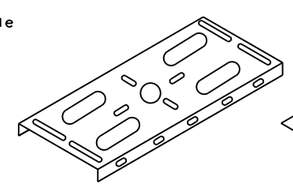

DHT 148939

Mailbox Bracket

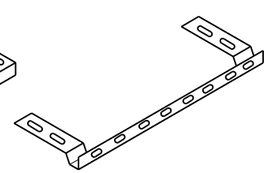

DHT 148938

Used for extending 6" wide bracket to attach larger mailboxes.

Bracket Extension

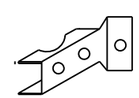

DHT 159489

Part "A" Angle Bracket Connector

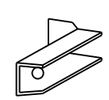

DHT 159490

Part "B" Angle Bracket Connector

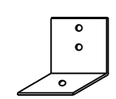

DHT 2917

Angle Bracket For Temporary Mailbox

See Table of Applicable DHT Numbers on sheet 4 of 4 for DHT description and unit of measure.

SHEET 2 OF 4

Texas Department of Transportation

Maintenance Division Standard

MAILBOX BRACKET CONNECTING DETAILS

MB-15(1)

FILE:MB14(1).DGN	DN: JEO	CK:	DW: JEO	CK:
©TxDOT APRIL 2015	CONT	SECT	JOB	HIGHWAY
REVISIONS ADDED DHT 163730	DIST	COUNTY		SHEET NO.

DISCLAIMER:
The use of this standard is governed by the "Texas Engineering Practice Act". No warranty of any kind is made by TxDOT for any purpose whatsoever. TxDOT assumes no responsibility for the conversion of this standard to other formats or for incorrect results or damages resulting from its use.

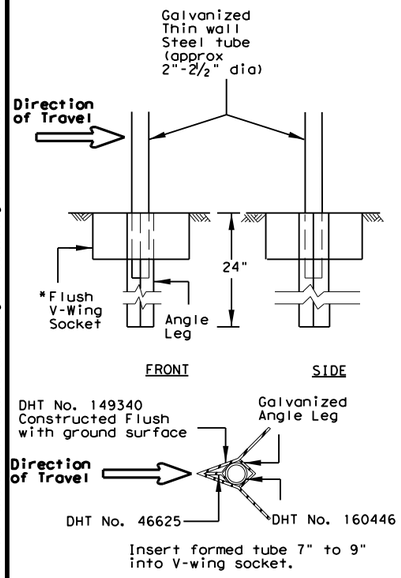

TYPE 1 SUPPORT/FOUNDATION

THIN WALL STEEL TUBE w/ V-LOC ANCHORAGE

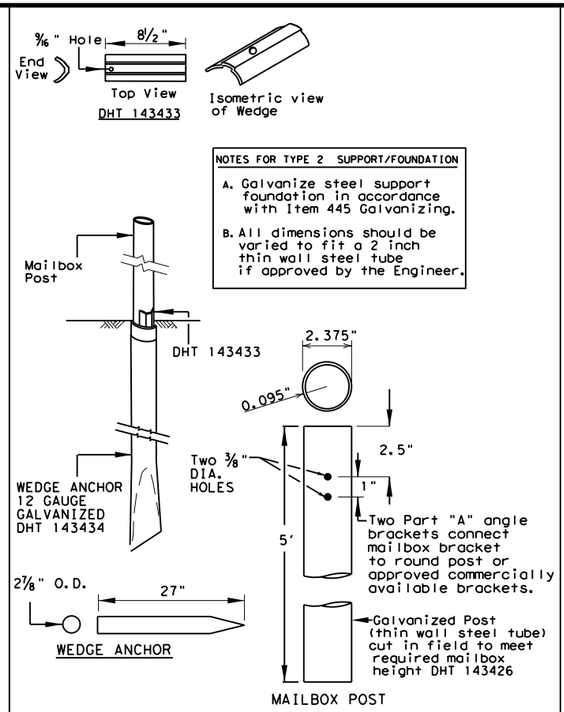

NOTES FOR TYPE 2 SUPPORT/FOUNDATION

A. Galvanize steel support foundation in accordance with Item 445 Galvanizing.

B. All dimensions should be varied to fit a 2 inch thin wall steel tube if approved by the Engineer.

TYPE 2 SUPPORT/FOUNDATION

THIN WALL STEEL TUBE w/ WEDGE ANCHOR SYSTEM

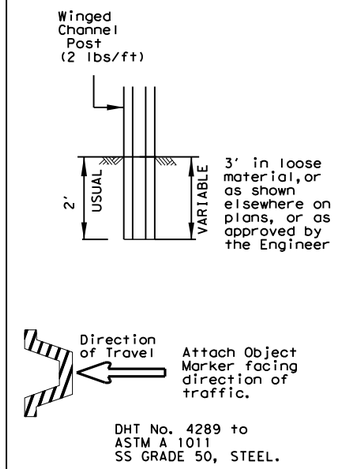

TYPE 3 SUPPORT/FOUNDATION

WINGED CHANNEL POST

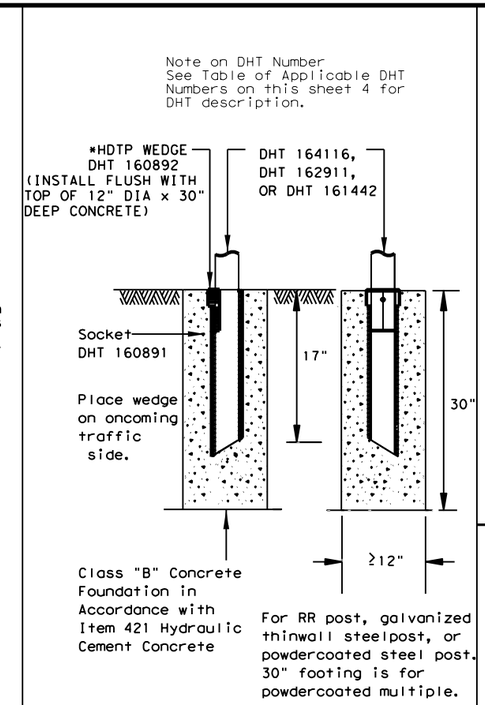

TYPE 4 SUPPORT/FOUNDATION

FOR WHITECOATED STEEL POST, MULTIPLE POST, AND RECYCLED RUBBER.

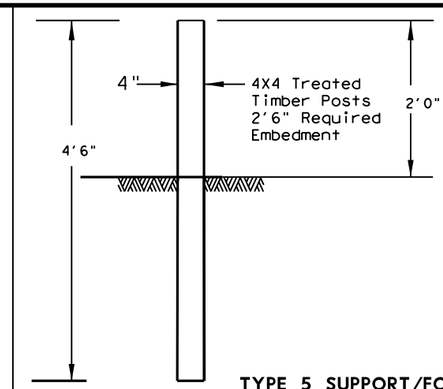

TYPE 5 SUPPORT/FOUNDATION

FOR ONE PIECE MOLDED PLASTIC MAILBOX

ONE PIECE MOLDED PLASTIC MAILBOXES

Molded Plastic Mailboxes shall be installed on 4"x4" treated timber posts only. The use of steel pipe or structural tubing in place of timber post is prohibited.

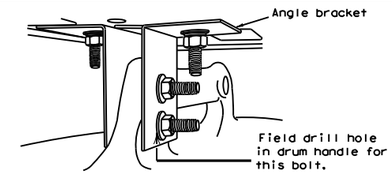

Placed on approved plastic drum as shown in the Compliant Work Zone Traffic Control Devices (CWZTCD).

Existing attachment hardware shall be used unless damaged. Damaged hardware shall be replaced.

TYPE 6 TEMPORARY MAILBOX SUPPORT

CONNECTION DETAIL

GENERAL NOTES

1. Erect post plumb or vertical.
2. When galvanized part is required galvanize in accordance with Item 445.
3. type 1, 2, 3, 4 or 7 supports or foundation can be used for single or double mailbox installations. The RCR post should be used only for a single installation with a small mailbox. The Type 5 support/foundation is used for the single molded plastic mailbox. The Type 4 support/foundation is used for the 2.375" O.D. RR post, thin wall steel post, and white multiple mailbox post.
4. The Type 1 or type 7 support/foundation can be used for a multiple mailbox mount.
5. The Type 4 support should be used with thin wall steel pipe for the medium, large and double mailbox installations.
6. Use a concrete footing as shown or when directed. Concrete footing will be required when soils do not hold the support/foundations in a stable condition.

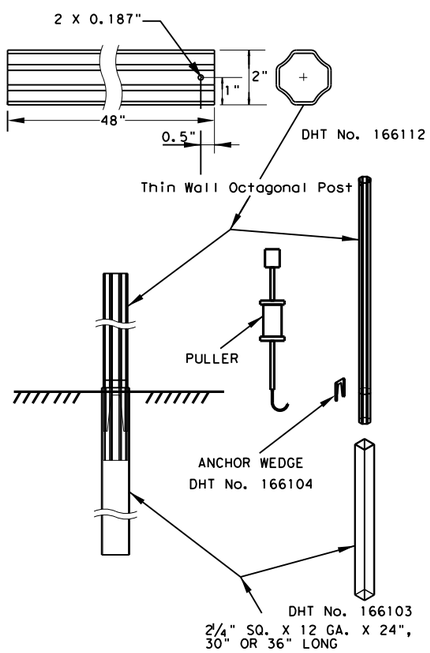

TYPE 7 MAILBOX SUPPORT/FOUNDATION

CONNECTION DETAIL

MB-(X) ASSM TY (XXX) (X) (X) (OPTIONAL)

Type of Mailbox
- S = Single
- D = Double
- M = Multiple
- SP = Single Plastic

Type of Post
- WC = Winged Channel Post
- RR = Recycled Rubber
- TWW = Thin Walled White Tubing
- TWG = Thin Walled Galvanized Tubing
- TIM = Timber

Type of Foundation
- Ty 1 = V-Loc
- Ty 2 = Wedge Anchor Steel System
- Ty 3 = Winged Channel post
- Ty 4 = Wedge Anchor Plastic System
- Ty 5 = 4 X 4 Post
- Ty 7 = Wedge Anchor

Type of Bracket
- AB = Angle Bracket.
- TB = 2.375" Tube Bracket

DOUBLE AND LARGE MAILBOXES MUST BE ON STEEL POST.

*HDTP: High density thermoplastic polyesters

SHEET 3 OF 4

Texas Department of Transportation — Maintenance Division Standard

MAILBOX SUPPORT AND FOUNDATION

MB-15(1)

FILE: MB14(1).DGN	DN: JEO	CK:	DW: JEO	CK:
© TxDOT APRIL 2015	CONT	SECT	JOB	HIGHWAY
REVISIONS	DIST		COUNTY	SHEET NO.

DISCLAIMER:
The use of this standard is governed by the "Texas Engineering Practice Act". No warranty of any kind is made by TxDOT for any purpose whatsoever. TxDOT assumes no responsibility for the conversion of this standard to other formats or for incorrect results or damages resulting from its use.

LOCKABLE ARCHITECTURAL MAILBOX

SINGLE-MOUNT INSTALLATION PARTS			
#	PART NAME	PART/DHT #	QTY
1	SOCKET, TYPE 4 FOUNDATION	160891	1
2	WEDGE FOR TYPE 4 FOUNDATION	160892	1
3	THIN-WALL WHITE STEEL TUBE 2.375 OD	162911	1
4	BRACKET FOR ATTACHING MAILBOX	161443	1
5	ARCHITECTURAL MAILBOX	SEE NOTE	1
6	NUT, 5/16" HEX	NUT, 5/16" HEX	1
7	BOLT, 5/16 X 3 HEX	GRADE 5	1
8	PLATE WASHER FOR ARCHITECTURAL MAILBOX	SEE SEE SHEET 2	2
9	WASHER, 3/8 FLAT		8
10	WASHER, 3/8 LOCK		4
11	NUT, 3/8 HEX		4
12	BOLT, 3/8 X 1-1/4 HEX	GRADE 5	4
13	CONCRETE, CLASS B (2000 PSI)		1

LOCKABLE ARCHITECTURAL MAILBOX DETAILS

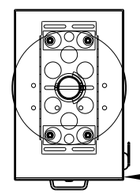

PLAN VIEW

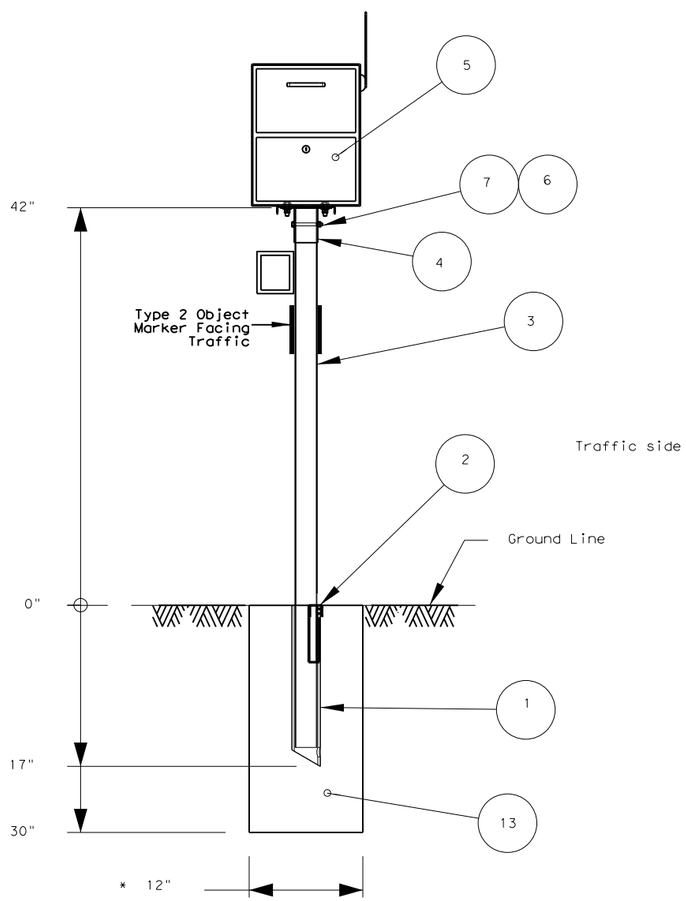

ELEVATION VIEW

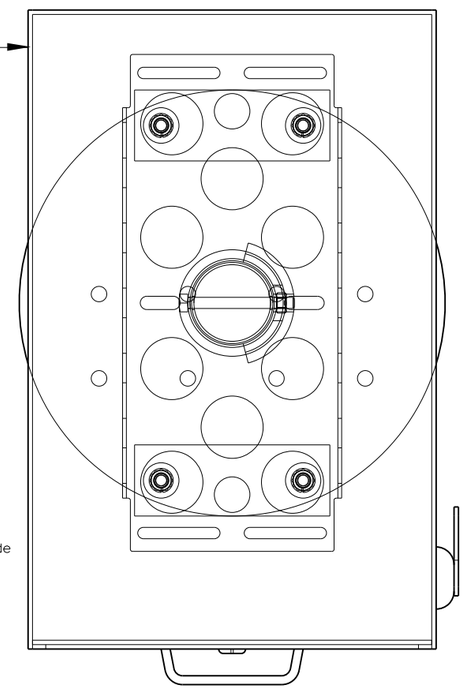

TABLE OF APPLICABLE DHT NUMBERS	
DHT NUMBER	DESCRIPTION
FOUNDATIONS	
46625	WEDGE FOR V-WING SOCKET FOR TYPE 1 FOUNDATION
149340	V-WING SOCKET FOR TYPE 1 FOUNDATION
143433	WEDGE FOR TYPE 2 FOUNDATION
143434	ANCHOR FOR TYPE 2 FOUNDATION
166103	ANCHOR FOR TYPE 7 FOUNDATION
160891	SOCKET FOR TYPE 4 FOUNDATION
160892	WEDGE FOR TYPE 4 FOUNDATION
166104	WEDGE FOR TYPE 7 FOUNDATION
POSTS	
4289	WINGED CHANNEL MAILBOX POST
149339	MULTIPLE MAILBOX POST (GALVANIZED TUBING)
164116	MULTIPLE MAILBOX POST (WHITE COATED)
166114	MULTIPLE MAILBOX POST (WHITE COATED OCTAGONAL)
166153	MULTIPLE MAILBOX POST (GALVANIZED OCTAGONAL)
161442	RECYCLED RUBBER POST. FOR SMALL MAILBOX ONLY
143426	THIN-WALL GALVANIZED STEEL TUBE 2.375" OUTER DIAMETER
162911	THINWALL WHITE STEEL TUBE 2.375" OUTER DIAMETER
166152	SINGLE OR DOUBLE THIN-WALL MAILBOX POST GALVANIZED 2" OCTAGONAL
166112	SINGLE OR DOUBLE THIN-WALL MAILBOX POST WHITECOATED 2" OCTAGONAL
REFLECTIVE SHEETING	
161812	REFLECTIVE SHEETING FOR EMERGENCY LOCATION NUMBER PANEL
CONNECTING HARDWARE	
2917	ANGLE BRACKET USED FOR TEMPORARY MAILBOX SUPPORT
166105	BRACKET FOR SINGLE MOUNTING OF MAILBOXES (MOUNTING KIT)
3789	PLATE FOR DOUBLE MOUNTING OF MAILBOXES
166108	BRACKET FOR DOUBLE MOUNTING OF MAILBOXES (MOUNTING KIT)
166111	BRACKET FOR MULTIPLE MOUNTING OF MAILBOXES (MOUNTING KIT)
148939	BRACKET FOR ATTACHING SMALL OR MEDIUM SIZE MAIL BOX
148938	EXTENDER TO BRACKET FOR ATTACHING LARGE MAILBOX
159489	ANGLE BRACKET PART A
159490	ANGLE BRACKET PART B
162323	BRACKET FOR DOUBLE MOUNTING OF MAILBOXES ON THINWALL STEEL POST, GALVANIZED OR POWDERCOATED.
161443	BRACKET FOR ATTACHING MAILBOX TO RECYCLED RUBBER POST AND TO MULTIPLE WHITE MAILBOX POST
158358	CASTING (NEWSPAPER RECEPTACLE BRACKET)
163731	U-BOLT (NEWSPAPER RECEPTACLE BRACKET)
160698	BOLT;HEX HEAD, GALV;3/8"DIA X 3/4"L HD, W/2-FLAT WASHERS
163750	BOLT;HEX HEAD, GALV;3/8" X 1-1/2, 16 NC, W/WASHERS
160701	BOLT;HEX HEAD, GALV;3/8"DIA X 2-1/2"L, HD, W/2-FLAT WASHERS
163730	BOLT;HEX HEAD, GALV;3/8" X 3-1/2", NC, W/NUT, 2 FLAT WASHERS
160699	BOLT;HEX HEAD, GALV;3/8"DIA X 3-3/4"L HD, W/2-FLAT WASHERS
160700	BOLT;HEX HEAD, GALV;3/8"DIA X 4"L HD, W/2-FLAT WASHERS

Texas Department of Transportation — Maintenance Division Standard

DHT NUMBERS TABLE

MB-15(1)

FILE:MB14(1).DGN	DN:	CK:	DW:	CK:
©TxDOT APRIL 2015	CONT	SECT	JOB	HIGHWAY
REVISIONS	DIST		COUNTY	SHEET NO.

DISCLAIMER: The use of this standard is governed by the "Texas Engineering Practice Act". No warranty of any kind is made by TxDOT for any purpose whatsoever. TxDOT assumes no responsibility for the conversion of this standard to other formats or for incorrect results or damages resulting from its use.

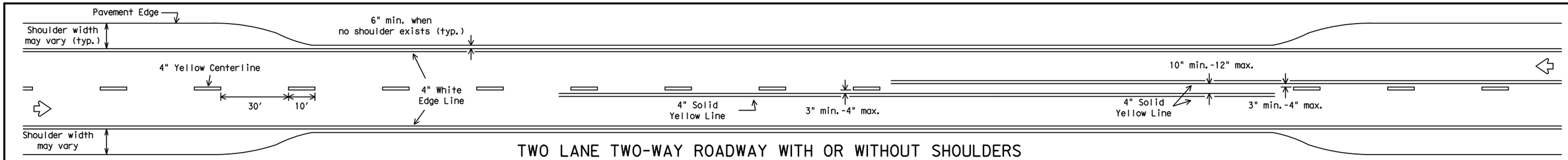

TWO LANE TWO-WAY ROADWAY WITH OR WITHOUT SHOULDERS

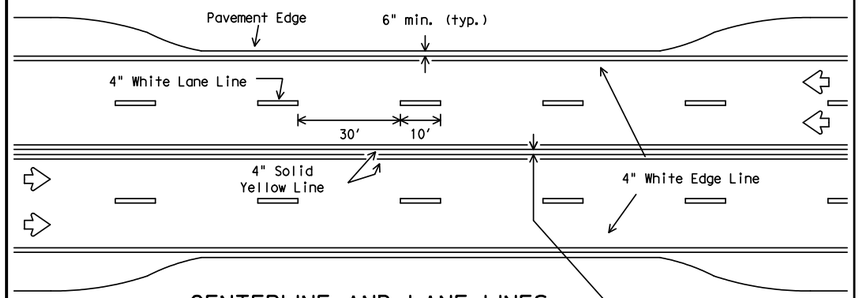

CENTERLINE AND LANE LINES FOUR LANE TWO-WAY ROADWAY WITH OR WITHOUT SHOULDERS

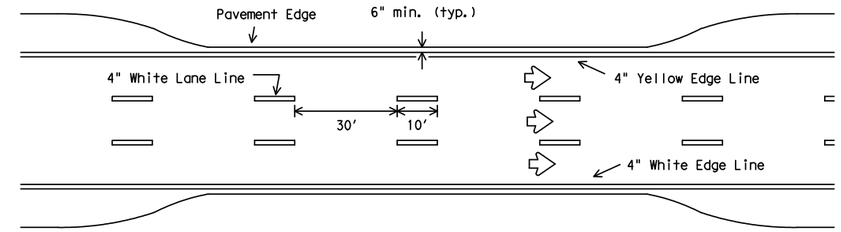

EDGE LINE AND LANE LINES ONE-WAY ROADWAY WITH OR WITHOUT SHOULDERS

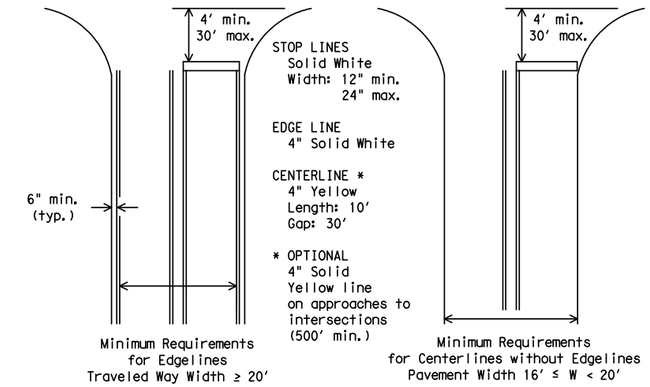

GUIDE FOR PLACEMENT OF STOP LINES, EDGE LINE & CENTERLINE

Based on Traveled Way and Pavement Widths for Undivided Highways

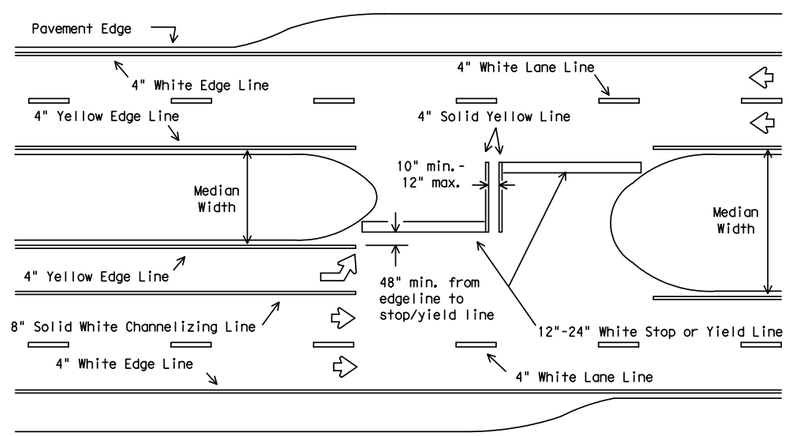

All medians shall be field measured to determine the location of necessary striping. Stop/Yield bars and centerlines shall be placed when the median width is greater than 30 ft. The median width is defined as the area between two roadways of a divided highway measured from edge of traveled way to edge of traveled way. The median excludes turn lanes. The median width might be different between intersections, interchanges and of opposite approaches of the same intersection. The narrow median width will be the controlling width to determine if markings are required.

FOUR LANE DIVIDED ROADWAY INTERSECTIONS

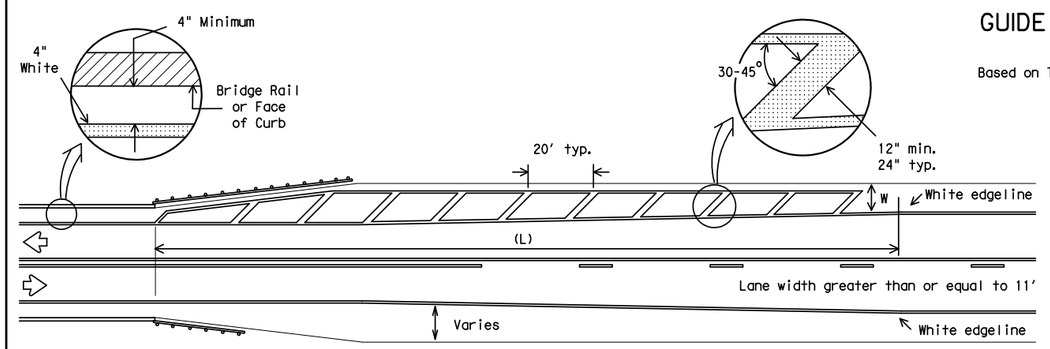

NOTES:

1. No-passing zone on bridge approach is optional but if used, it shall be a minimum 500 feet long.
2. For crosshatching length (L) see Table 1.
3. The width of the offset (W) and the required crosshatching width is the full shoulder width in advance of the bridge.
4. The crosshatching is not required if delineators or barrier reflectors are used along the structure.
5. For guard fence details, refer elsewhere in the plans.

ROADWAYS WITH REDUCED SHOULDER WIDTHS ACROSS BRIDGE OR CULVERT

TABLE 1 - TYPICAL LENGTH (L)

Posted Speed *	Formula
≤ 40	$L = \frac{WS^2}{60}$
≥ 45	L=WS

* 85th Percentile Speed may be used on roads where traffic speeds normally exceed the posted speed limit. Crosshatching length should be rounded up to nearest 5 foot increment.

L=Length of Crosshatching (FT.) W=Width of Offset (FT.)
S=Posted Speed (MPH)

EXAMPLES:

An 8 foot shoulder in advance of a bridge reduces to 4 feet on a 70 MPH roadway. The length of the cross-hatching should be:

$L = 8 \times 70 = 560$ ft.

A 4 foot shoulder in advance of a bridge reduces to 2 feet on a 40 MPH roadway. The length of the cross-hatching should be:

$L = 4(40)^2 / 60 = 106.67$ ft. rounded to 110 ft.

GENERAL NOTES

1. Edgeline striping shall be as shown in the plans or as directed by the Engineer. The edgeline should typically be placed a minimum of 6 inches from the edge of pavement. This distance may vary due to pavement raveling or other conditions. Edgelines are not required in curb and gutter sections of roadways.
2. The traveled way includes only that portion of the roadway used for vehicular travel and not the parking lanes, sidewalks, berms and shoulders. The traveled ways shall be measured from the inside of edgeline to inside of edgeline of a two lane roadway.

MATERIAL SPECIFICATIONS	
PAVEMENT MARKERS (REFLECTORIZED)	DMS-4200
EPOXY AND ADHESIVES	DMS-6100
BITUMINOUS ADHESIVE FOR PAVEMENT MARKERS	DMS-6130
TRAFFIC PAINT	DMS-8200
HOT APPLIED THERMOPLASTIC	DMS-8220
PERMANENT PREFABRICATED PAVEMENT MARKINGS	DMS-8240

All pavement marking materials shall meet the required Departmental Material Specifications as specified by the plans.

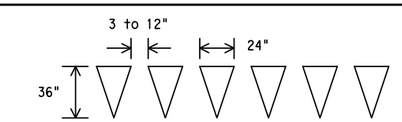

FOR POSTED SPEED ON ROAD BEING MARKED EQUAL TO OR GREATER THAN 45 MPH

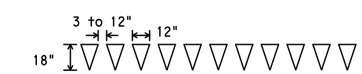

FOR POSTED SPEED ON ROAD BEING MARKED EQUAL TO OR LESS THAN 40 MPH

YIELD LINES

Texas Department of Transportation
Traffic Operations Division

TYPICAL STANDARD PAVEMENT MARKINGS

PM(1)-12

© TxDOT November 1978

DN: TXDOT	CK: TXDOT	DW: TXDOT	CK: TXDOT
CONT	SECT	JOB	HIGHWAY
DIST	COUNTY		SHEET NO.

REVISIONS
8-95 2-12
5-00
8-00
3-03

22A

DATE:
FILE:

DISCLAIMER: The use of this standard is governed by the "Texas Engineering Practice Act". No warranty of any kind is made by TxDOT for any purpose whatsoever. TxDOT assumes no responsibility for the conversion of this standard to other formats or for incorrect results or damages resulting from its use.

REFLECTIVE RAISED PAVEMENT MARKERS FOR VEHICLE POSITIONING GUIDANCE

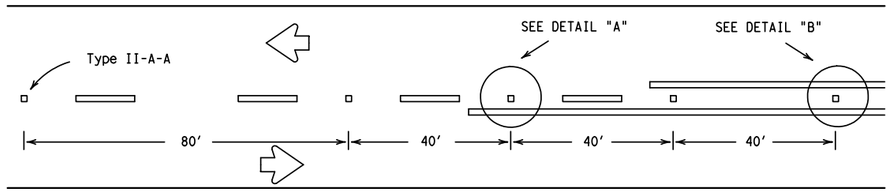

CENTERLINE FOR ALL TWO LANE ROADWAYS

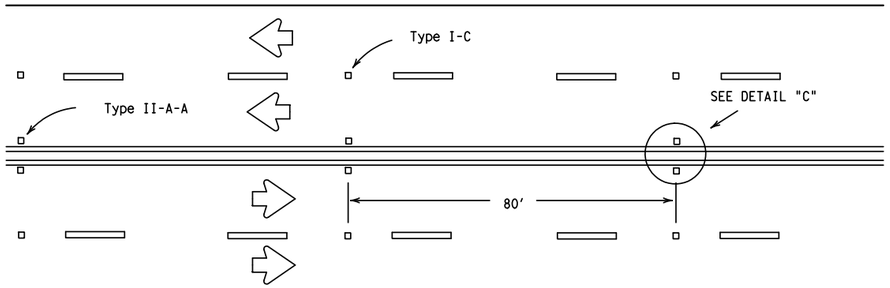

CENTERLINE & LANE LINES FOR FOUR LANE TWO-WAY HIGHWAYS

Raised pavement marker Type I-C, clear face toward normal traffic, shall be placed on 80-foot centers.

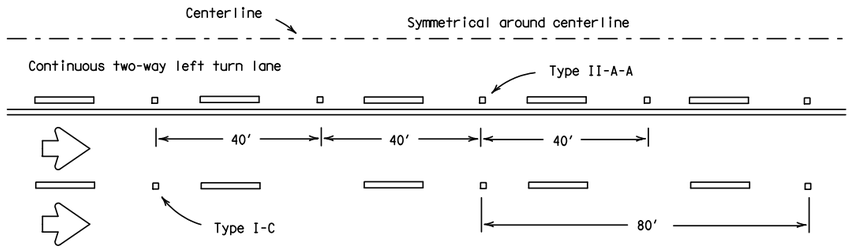

CENTERLINE AND LANE LINES FOR TWO-WAY LEFT TURN LANE

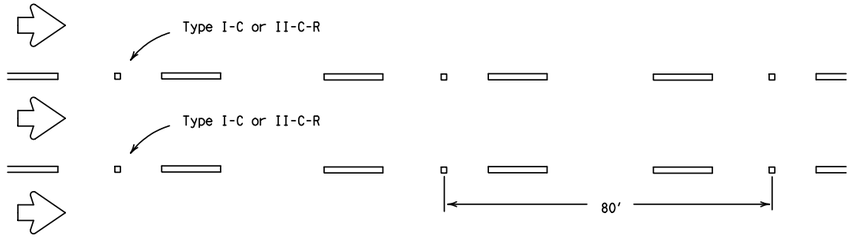

LANE LINES FOR ONE-WAY ROADWAY (NON-FREEWAY FACILITIES)

Raised pavement markers Type II-C-R shall have clear face toward normal traffic and red face toward wrong-way traffic.

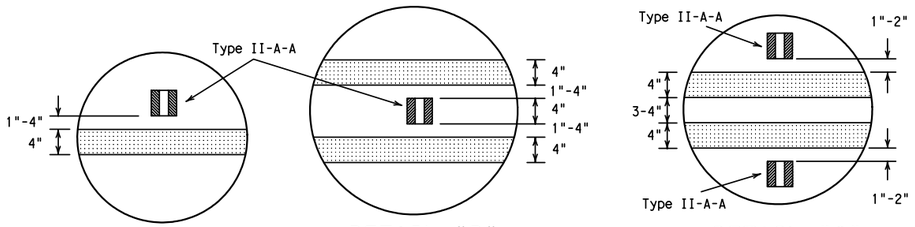

DETAIL "A" DETAIL "B" DETAIL "C"

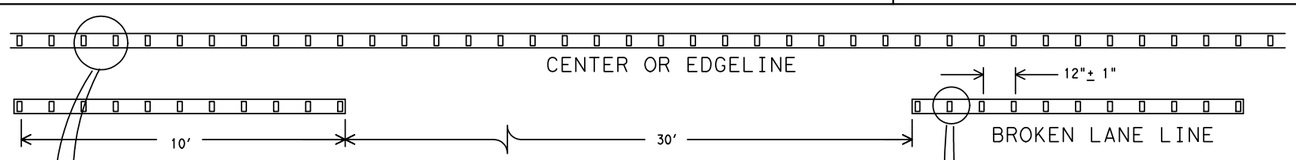

REFLECTORIZED PROFILE PATTERN DETAIL

USING REFLECTIVE PROFILE PAVEMENT MARKINGS

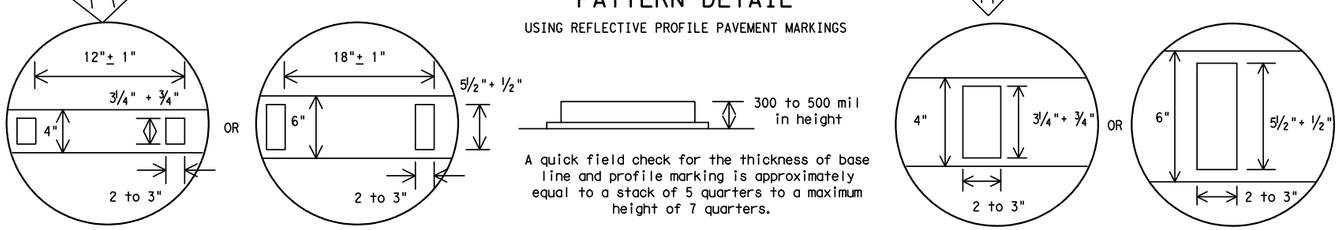

4" EDGE LINE OR CENTERLINE

OPTIONAL 6" EDGE LINE OR CENTERLINE

A quick field check for the thickness of base line and profile marking is approximately equal to a stack of 5 quarters to a maximum height of 7 quarters.

4" LANE LINE

OPTIONAL 6" LANE LINE

NOTE:

Profile markings shall not be placed on roadways with a posted speed limit of 45 MPH or less.

GENERAL NOTES

1. All raised pavement markers placed in broken lines shall be placed in line with and midway between the stripes.
2. On concrete pavements the raised pavement markers should be placed to one side of the longitudinal joints.

MATERIAL SPECIFICATIONS	
PAVEMENT MARKERS (REFLECTORIZED)	DMS-4200
EPOXY AND ADHESIVES	DMS-6100
BITUMINOUS ADHESIVE FOR PAVEMENT MARKERS	DMS-6130
TRAFFIC PAINT	DMS-8200
HOT APPLIED THERMOPLASTIC	DMS-8220
PERMANENT PREFABRICATED PAVEMENT MARKINGS	DMS-8240

All pavement marking materials shall meet the required Departmental Material Specifications as specified by the plans.

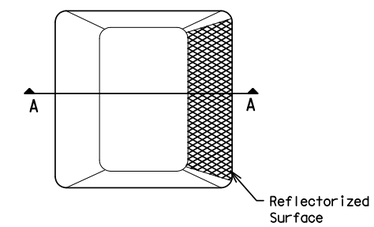

Type I (Top View)

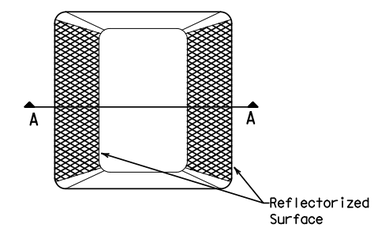

Type II (Top View)

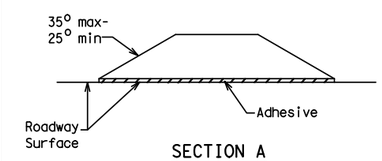

SECTION A

RAISED PAVEMENT MARKERS

Texas Department of Transportation
Traffic Operations Division

POSITION GUIDANCE USING RAISED MARKERS
REFLECTORIZED PROFILE MARKINGS

PM(2)-12

© TxDOT April 1977

DN: TXDOT	CK: TXDOT	DW: TXDOT	CK: TXDOT

REVISIONS
4-92 2-10
5-00 2-12
8-00
2-08

CONT	SECT	JOB	HIGHWAY
DIST	COUNTY		SHEET NO.

22B

DATE:
FILE:

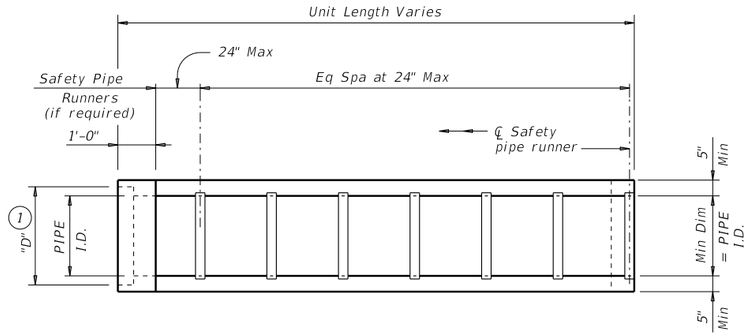

PLAN

(Showing bell end connection)

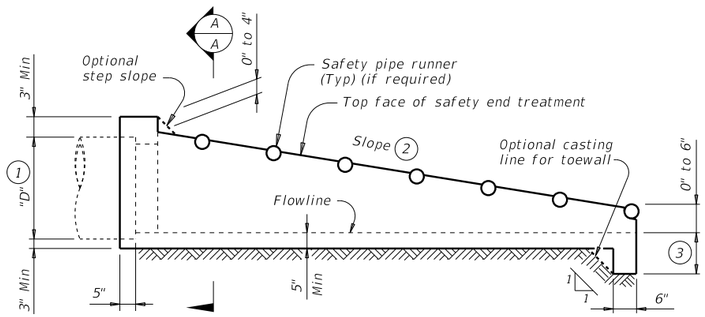

LONGITUDINAL ELEVATION

(Showing bell end connection)

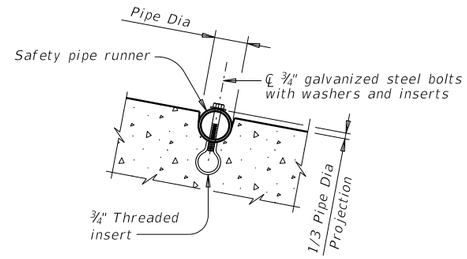

INSTALLATION DETAIL FOR SAFETY PIPE RUNNERS

(If required)

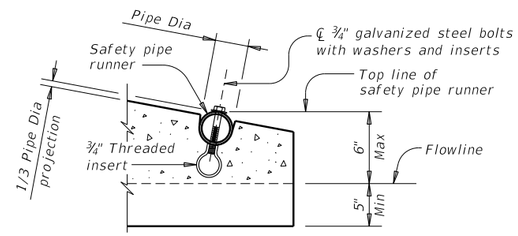

OPTION A

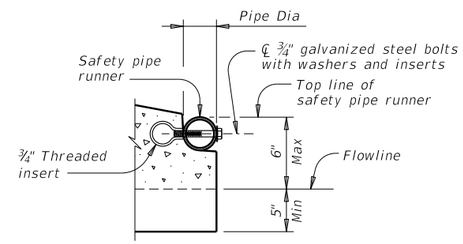

OPTION B

END DETAILS FOR INSTALLATION OF SAFETY PIPE RUNNERS

(If required)

PIPE I.D.	RCP WALL "B" THICKNESS	TP WALL THICKNESS (7)	"D" (1)	MAXIMUM SLOPE	MINIMUM LENGTH OF UNIT	PIPE RUNNERS REQUIRED		REQUIRED PIPE RUNNER SIZES		
						SINGLE PIPE	MULTIPLE PIPE	NOMINAL DIA.	O.D.	I.D.
12"	2"	1.15"	17"	6:1	4'-9"	No	Yes, for >2 pipes	3" STD	3.500"	3.068"
15"	2.25"	1.30"	20.50"	6:1	6'-5"	No	Yes, for >2 pipes	3" STD	3.500"	3.068"
18"	2.50"	1.60"	24"	6:1	8'-0"	No	Yes, for >2 pipes	3" STD	3.500"	3.068"
24"	3"	1.95"	31"	6:1	11'-3"	No	Yes, for >2 pipes	3" STD	3.500"	3.068"
30"	3.50"	2.65"	38.50"	6:1	14'-8"	No	Yes	4" STD	4.500"	4.026"
36"	4"	2.75"	45.50"	6:1	17'-11"	Yes	Yes	4" STD	4.500"	4.026"
42"	4.50"	N/A	52.50"	6:1	21'-2"	Yes	Yes	4" STD	4.500"	4.026"

(1) Dimension "D" is based on Reinforced Concrete Pipe (RCP) meeting the requirements of ASTM C-76, Class III, (RCP Wall "B" thickness). Adjust "D" for any other wall thickness used. For Thermoplastic Pipe (TP) take into account the annular space requirements for grouted connections.

(2) Slope as shown elsewhere in the plans. Slope of 6:1 or flatter is required for vehicle safety.

(3) Toewall to be used only when dimension is shown elsewhere in the plans.

(4) Fill the top 4" of void between precast end treatments with concrete riprap. Concrete riprap is considered subsidiary to the Item "Safety End Treatment".

(5) Adjust clear distance between pipes to provide for the minimum distance between safety end treatments.

(6) Provide cement stabilized bedding and backfill in accordance with the Item, "Excavation and Backfill for Structures". Bedding and backfill is considered subsidiary to the Item "Safety End Treatment". When concrete riprap is specified around the safety end treatment, backfill as directed by Engineer.

(7) Thermoplastic pipe wall thickness may vary. Adjust accordingly. Thermoplastic pipe requires the safety end treatments to have a bell end for grouted connections.

GENERAL NOTES:

Precast safety end treatment for reinforced concrete pipe (RCP), and thermoplastic pipe (TP) may be used for TYPE II end treatment as specified in Item "Safety End Treatment".

When precast safety end treatment is used as a Contractor's alternate to mitered RCP, riprap will not be required unless noted otherwise on the plans.

Synthetic fibers listed on the "Fibers for Concrete" Material Producer List (MPL) may be used in lieu of steel reinforcing in riprap concrete unless noted otherwise.

Manufacture this product in accordance with Item "Safety End Treatment" except as noted below :

A. Provide minimum reinforcing of #4 at 6" (Grade 40) or #4 at 9" (Grade 60) each way or 6"x6" - D12 x D12 or 5"x5" - D10 x D10 welded wire reinforcement (WWR).

B. For precast (steel formed) sections, provide Class "C" concrete (f'c = 3,600 psi).

At the option and expense of the Contractor the next larger size of safety end treatment may be furnished; as long as the "D" dimension cast is that of the required size of pipe.

Pipe runners are designed for a traversing load of 10,000 Lbs at yield as recommended by Research Report 280-2F, "Safety Treatment of Roadside Parallel-Drainage Structures", Texas Transportation Institute, March 1981.

Provide pipe runners meeting the requirements of ASTM A53 (Type E or S, Grade B), ASTM A500 (Grade B), or API 5LX52.

Galvanize all steel components except reinforcing steel after fabrication. Repair galvanizing damaged during transport or construction in accordance with the specifications.

Connect RCP using the Optional Joint for RCP detail shown or in accordance with Item 464 "Reinforced Concrete Pipe". Connect TP by grouting. See PBGC standard for grouted connections with TP and precast safety end treatment.

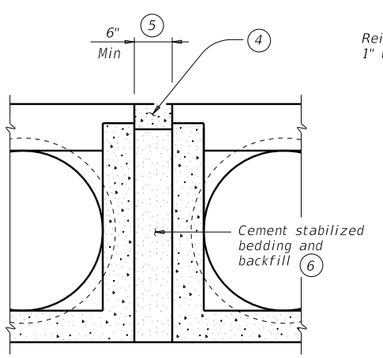

MULTIPLE PIPE INSTALLATION

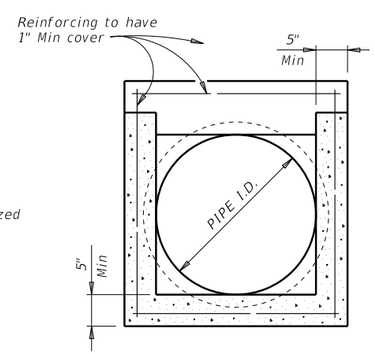

OPTION WITH SQUARE BOTTOM

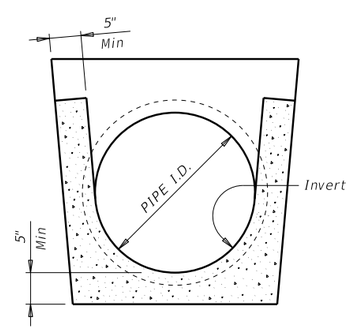

OPTION WITH INVERT BOTTOM

SECTION A-A

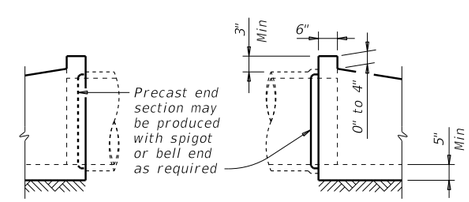

OPTIONAL JOINT FOR RCP

(Showing joint between RCP and precast safety end treatment)

Texas Department of Transportation — Bridge Division Standard

PRECAST SAFETY END TREATMENT

TYPE II ~ PARALLEL DRAINAGE

PSET-SP

FILE: psetspss-18.dgn	DN: RLW	CK: KLR	DW: JTR	CK: GAF
©TxDOT February 2010	CONT	SECT	JOB	HIGHWAY
REVISIONS	DIST		COUNTY	SHEET NO.
11-10: Add note for synthetic fibers. 09-18: Added Thermoplastic Pipe in table.				

DISCLAIMER:
The use of this standard is governed by the "Texas Engineering Practice Act". No warranty of any kind is made by TxDOT for any purpose whatsoever. TxDOT assumes no responsibility for the conversion of this standard to other formats or for incorrect results or damages resulting from its use.

DATE:
FILE:

DISCLAIMER:
The use of this standard is governed by the "Texas Engineering Practice Act". No warranty of any kind is made by TxDOT for any purpose whatsoever. TxDOT assumes no responsibility for the conversion of this standard to other formats or for incorrect results or damages resulting from its use.

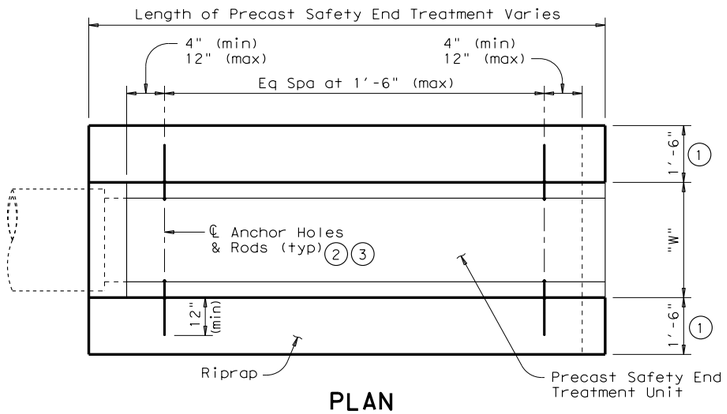

PLAN

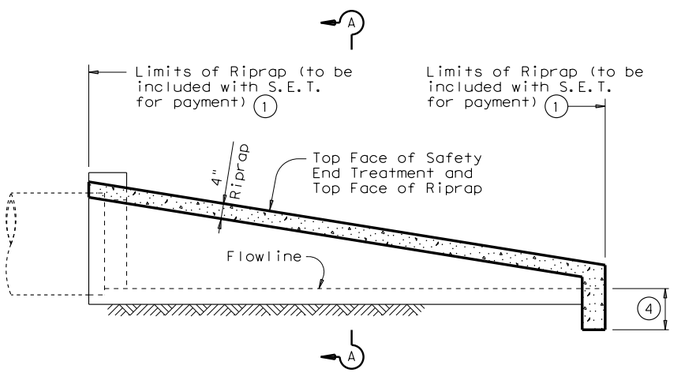

LONGITUDINAL ELEVATION

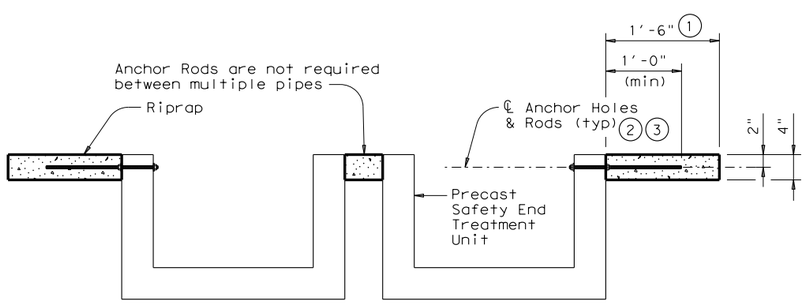

MULTIPLE PIPE INSTALLATION

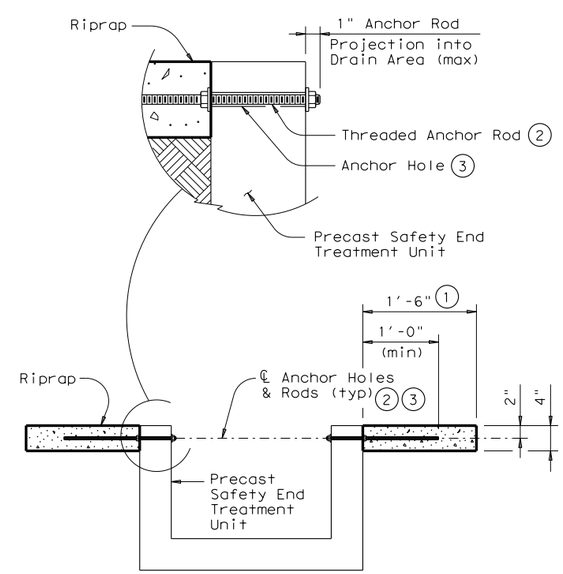

SINGLE PIPE INSTALLATION

SECTION A-A

ESTIMATED CONCRETE RIPRAP QUANTITIES (CY) 5

Nominal Culvert (Pipe) I.D.	PSET-SC & PSET-SP Standards				PSET-RC & PSET-RP Standards			
	Unit Width "W"	Side Slope			Unit Width "W"	Side Slope		
		3:1	4:1	6:1		3:1	4:1	6:1
12"	23.0"	0.1	0.2	0.2	16.0"	0.1	0.1	0.2
15"	26.5"	0.2	0.2	0.3	19.5"	0.1	0.2	0.2
18"	30.0"	0.2	0.2	0.3	23.0"	0.2	0.2	0.3
24"	37.0"	0.3	0.3	0.5	30.0"	0.2	0.3	0.4
30"	44.5"	0.3	0.4	0.6	37.0"	0.3	0.3	0.5
36"	51.5"	0.4	0.5	0.7	44.0"	0.3	0.4	0.6
42"	58.5"	0.5	0.6	0.8	51.0"	0.4	0.5	0.7

1. Riprap placed beyond the limits shown will be paid as Concrete Riprap in accordance with Item 432, "Riprap". When Riprap is cast integrally with the Precast Safety End Treatment, this dimension shall be 1'-0" minimum.

2. ½" Diam A307 Gr.A threaded Anchor Rod w/ 2 nuts & 2 washers. All components shall be galvanized in accordance with Item 445, "Galvanizing". Galvanizing that is damaged during transport or construction shall be repaired in accordance with the specifications.

3. ¾" through holes in walls of Safety End Treatment for Riprap Anchor Rods may be drilled with rotary (coring or masonry) type drilling equipment or may be formed. Percussive (star) type drilling equipment shall not be used. If holes are drilled, spalls in the inside face of the wall exceeding ½" from the holes shall be patched.

4. Provide Riprap Toe Wall when dimension is shown elsewhere in the plans or when field conditions require a Toe Wall.

5. Quantities shown are for one end of one reinforced concrete pipe culvert. For multiple pipe culverts, quantities will need to be adjusted. Riprap quantities are for Contractor's information only. Quantities are based on the minimum unit lengths shown on the Precast S.E.T. standards.

GENERAL NOTES:

Precast Safety End Treatment for reinforced concrete pipe may be used for TYPE II end treatment as specified in Item 467, "Safety End Treatment".

Riprap shall be Class "B" Riprap in accordance with Item 432, "Riprap".

Payment for Riprap and Toewalls is included in the Price Bid for each Safety End Treatment.

Synthetic fibers listed on the "Fibers for Concrete" Material Producer List (MPL) may be used in lieu of steel reinforcing in riprap concrete unless noted otherwise. The anchor rods shown are always required.

Refer to PSET-SC or PSET-SP standard sheets for details of square Safety End Treatments not shown. Refer to PSET-RC or PSET-RP standard sheets for details of round Safety End Treatments not shown.

For precast units with integrally cast Riprap, reinforcing steel in the amount on 0.26 sq in/ft minimum shall be substituted for the threaded anchor rods shown. When requested, sealed engineering drawings shall be submitted for approval prior to construction. Shop drawings will not be required. Note that a proprietary precast unit with integral Riprap is available from L&R Precast Concrete Works, Inc. (956) 583-6293 or www.lrprecast.com.

These Riprap details are only applicable when notes that require placement of Riprap with Precast Safety End Treatments are shown elsewhere in the plans.

Precast units with integrally cast Riprap shall be permitted unless noted otherwise on the plans.

Texas Department of Transportation — Bridge Division Standard

PRECAST SAFETY END TREATMENT
TYPE II
RIPRAP DETAILS

PSET-RR

FILE: psetrrse.dgn	DN: GAF	CK: TxDOT	DW: JRP	CK: GAF
©TxDOT February 2010	CONT	SECT	JOB	HIGHWAY
REVISIONS				
11-10: Add note for synthetic fibers.	DIST	COUNTY		SHEET NO.

DATE:
FILE:

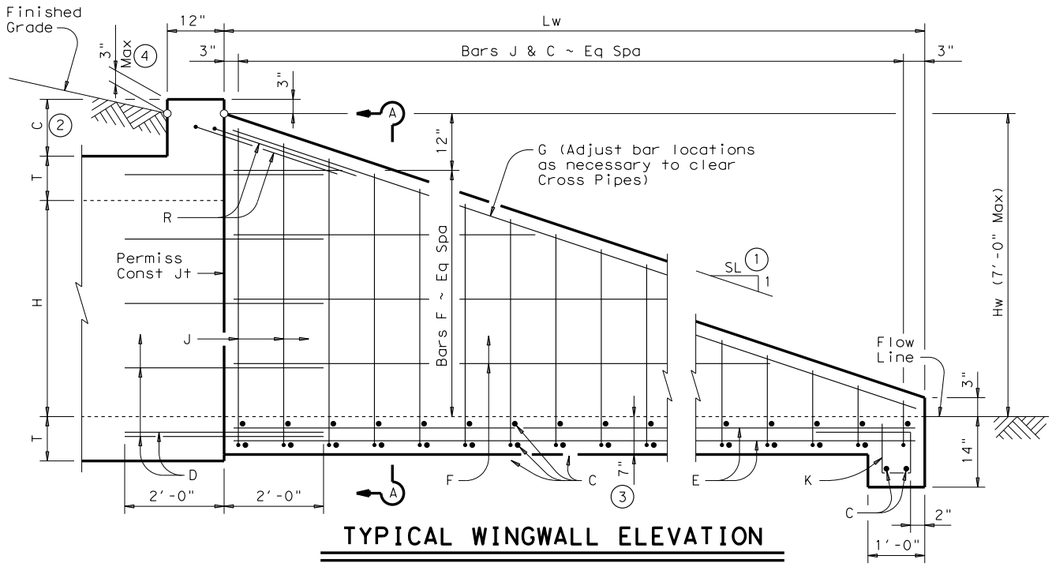

TYPICAL WINGWALL ELEVATION

(Cross Pipes not shown for clarity)

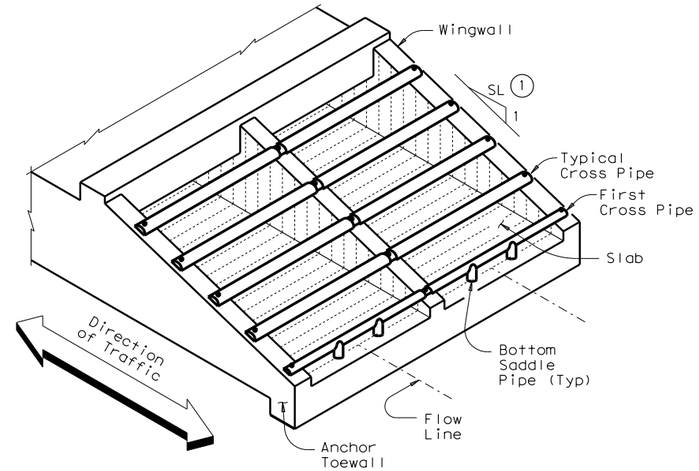

ISOMETRIC VIEW OF TYPICAL INSTALLATION

(Showing Bolted Anchor Option)

Formulas: (All values are in Feet)

$Hw = H + T + C - 0.250'$

$Lw = (Hw - 0.250') (SL)$

For Cast-in-place culverts:

$Atw = (N) (S) + (N+1) (U)$

For Precast culverts:

$Atw = (N) (2U+S) + (N-1) (0.500')$

Total Wingwall Area (S.F.)
$= (0.5) (Hw + 0.250') (Lw) (N+1)$

Total Concrete Volume (C.Y.)
$= [(\text{Wingwall Area}) (0.583') + (Lw) (Atw) (0.583') + (Atw) (1.000') (1.167' - 0.583')] \div (27)$

Total Reinforcing (Lbs)
$= (1.55) (Lw) (Atw) + (4.43) (Atw) + (K) (Hw) (N+1) (\sqrt{Lw})$

C = Height of Curb above top of Top Slab
Hw = Height of Wingwall
K = Constant Value for use in formulas
Slope SL:1 K
6:1 ~ 10.41
Atw = Anchor Toewall Length
Lw = Length of Wingwall
N = Number of Culvert Barrels
S = Clear Span of each Barrel
SL:1 = Side Slope Ratio (Horizontal : 1 Vertical)

See applicable box culvert standard for H, S, T, and U values.

GENERAL NOTES:

Designed according to AASHTO LRFD Specifications.

The Safety End Treatments shown herein are intended for use in those installations where out of control vehicles are likely to traverse the openings approximately perpendicular to the Cross Pipes.

Cross Pipes are designed for a traversing load of 10,000 pounds at yield as recommended by Research Report 280-2F, "Safety Treatment of Roadside Parallel-Drainage Structures", Texas Transportation Institute, March 1981.

All concrete shall be Class "C" and shall have a minimum compressive strength of 3600 psi.

All reinforcing steel shall be Grade 60. All reinforcing shall be adjusted as necessary to provide a minimum clear cover of 1 1/4".

The quantities for concrete, reinforcing steel, and Cross Pipes resulting from the formulas given herein are for Contractor's information only.

Cross Pipes, Sleeve Pipes, and Saddle Pipes shall conform to the requirements of ASTM A53 (Type E or S, Grade B), ASTM A500 (Grade B), or API 5LX52.

Bolts and nuts shall conform to ASTM A307.

All steel components, except the concrete reinforcing, shall be galvanized after fabrication. Galvanizing damaged during transport or construction shall be repaired in accordance with the specifications.

See BCS standard sheet for additional dimensions and information.

Alternate design drawings bearing the seal of a professional engineer will be acceptable for precast construction of the Safety End Treatments.

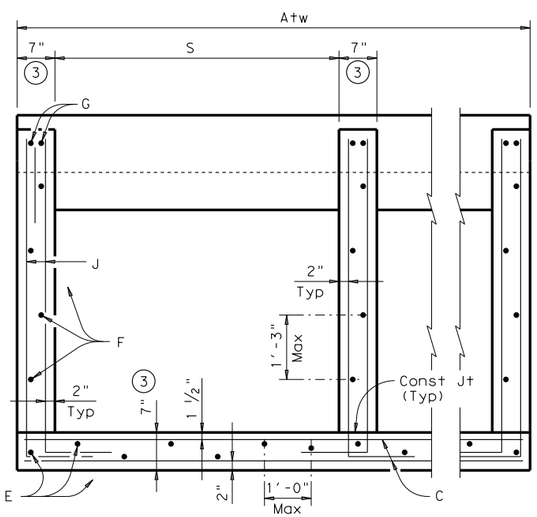

SECTION A-A

(Showing typical Wingwall and Wing Slab reinforcing)
(Pipe Runners not shown for clarity)

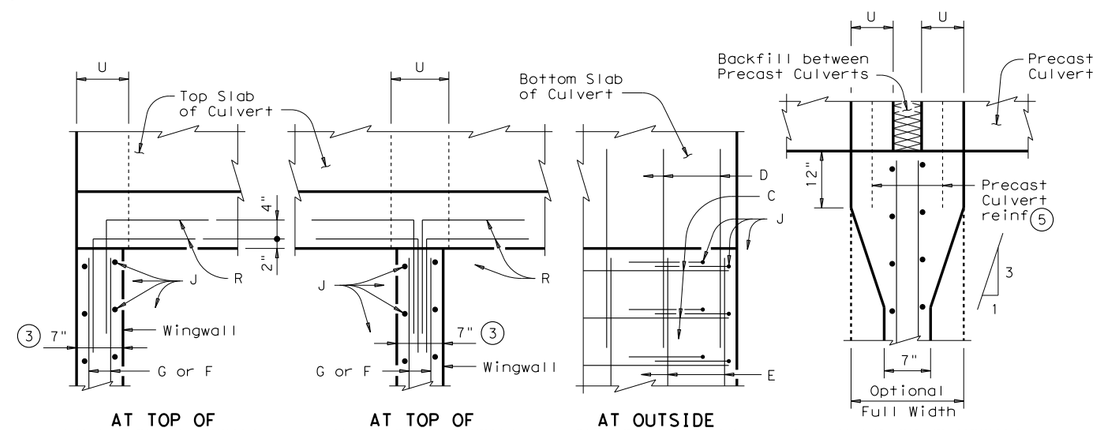

AT TOP OF EXTERIOR WINGWALL
(Cast-in-Place Culvert)

AT TOP OF INTERIOR WINGWALL
(Cast-in-Place Culvert)

AT OUTSIDE OF BOTTOM SLAB
(Cast-in-Place Culvert)

AT INTERIOR WINGWALL
(Precast Culvert)

PLAN VIEWS OF CORNER DETAILS

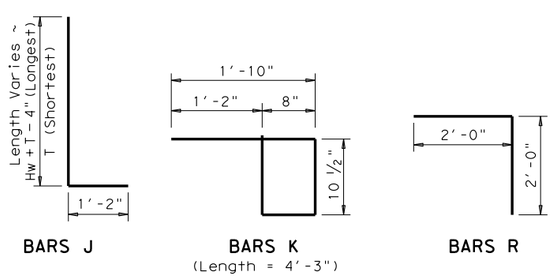

BARS J

BARS K
(Length = 4'-3")

BARS R

TABLE OF REINFORCING BAR SIZES & SPACING

Bar	Size	Spacing
C	#4	10" Max
D	#4	match F & E
E	#4	1'- 0" Max
F	#4	1'- 3" Max
G	#6	Shown
J	#4	10" Max
K	#4	1'- 0" Max
R	#4	Shown

(1) Slope will be 6:1 or flatter.

(2) 0" min to 5'-0" max. Estimated curb heights are shown elsewhere in the plans. For structures without railing and curbs taller than 1'-0", refer to ECD standard.

(3) Wingwall and slab thicknesses may be the same as the adjacent culvert wall and slab thicknesses (7" Minimum). If thicknesses greater than the minimum (7") are used, no changes will be made in quantities and no additional compensation will be allowed.

(4) For vehicle safety, curbs shall project no more than 3" above finished grade. Curb heights shall be reduced, if necessary, to meet these requirements. No changes will be made in quantities and no additional compensation will be allowed for this work.

(5) For Culverts with C = 0", the precast culvert reinforcing may extend 1'-0" minimum into Wingwall. Wingwall Bars D and R may be omitted. Otherwise, refer to the "Wingwall Connection Detail" on the SCP-MD standard.

DISCLAIMER:
The use of this standard is governed by the "Texas Engineering Practice Act". No warranty of any kind is made by TxDOT for any purpose whatsoever. TxDOT assumes no responsibility for the conversion of this standard to other formats or for incorrect results or damages resulting from its use.

DATE:
FILE:

SHEET 1 OF 2

Texas Department of Transportation — Bridge Division Standard

SAFETY END TREATMENT

FOR BOX CULVERTS
(MAXIMUM Hw = 7'-0")
TYPE I ~ PARALLEL DRAINAGE

SETB-PD

FILE: setbpdse.dgn	DN: GAF	CK: CAT	DW: JRP	CK: GAF
©TxDOT February 2010	CONT	SECT	JOB	HIGHWAY
REVISIONS	DIST		COUNTY	SHEET NO.

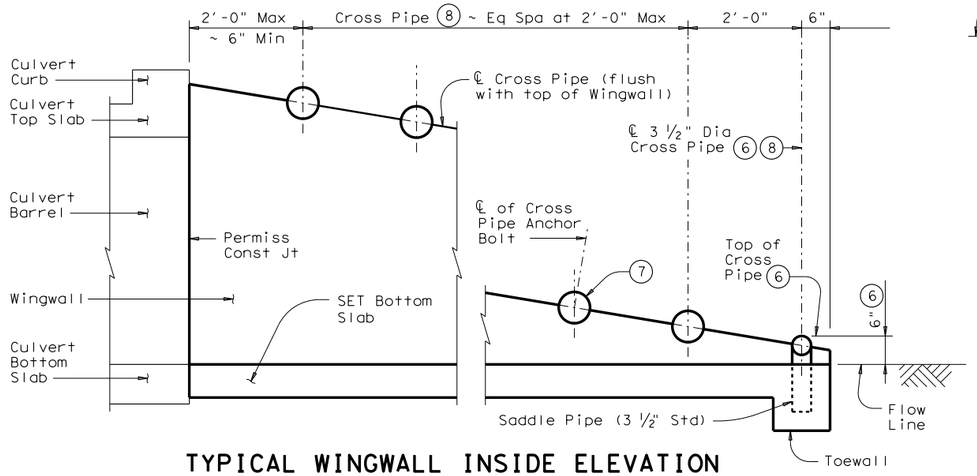

TYPICAL WINGWALL INSIDE ELEVATION

(Showing installation of Cross Pipes)

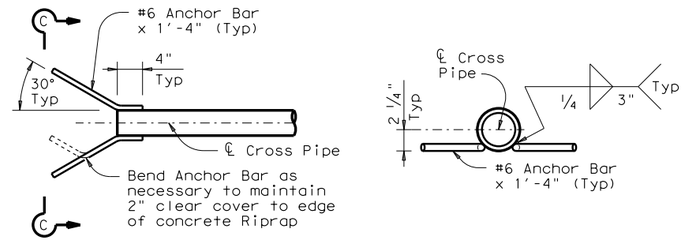

OPTIONAL ANCHOR BAR DETAILS

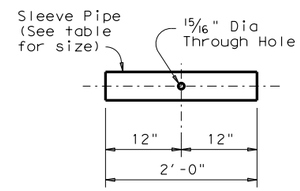

SLEEVE PIPE DETAILS (9)

REQUIRED PIPE SIZES (8)		
Culvert Span Sizes	Cross Pipe Size	Sleeve Pipe Size (9)
First Pipe	3 ½" STD	2 ½" STD
30" to 42"	4" STD	3" STD
48" to 72"	5" STD	4" STD
78" to 120"	6" STD	5" STD

STANDARD PIPE SIZES		
Pipe Size	Pipe O.D.	Pipe I.D.
2 ½" STD	2.875"	2.469"
3" STD	3.500"	3.068"
3 ½" STD	4.000"	3.548"
4" STD	4.500"	4.026"
5" STD	5.563"	5.047"
6" STD	6.625"	6.065"

(6) The proper installation of the first Cross Pipe is critical for vehicle safety. The top of the first Cross Pipe must be placed at no more than 6" above the flow line.

(7) The third Cross Pipe from the bottom of the Culvert shall always be installed using a bolted connection. Care shall be taken to ensure that concrete does not flow into this Cross Pipe so as to permit disassembly of the bolted connection to allow cleanout access.

(8) Cross Pipes and Sleeve Pipes (if required) shall be as shown in the REQUIRED PIPE SIZES table. Saddle Pipes for the 3 ½" first Cross Pipe shall also be 3 ½".

(9) At Contractor's option, the Cross Pipe may be continuous across the Inside Wingwalls. If such option is selected, the Sleeve Pipe shall be omitted and a 15/16" diameter through hole made in the Cross Pipe to accept the anchor bolt at the centerline of each Interior Wingwall.

(10) Riprap will be required when using the optional Anchor Bar details and shall be included in the Price Bid for Safety End Treatment. Such Riprap shall be concrete Riprap in accordance with Item 432, "Riprap".

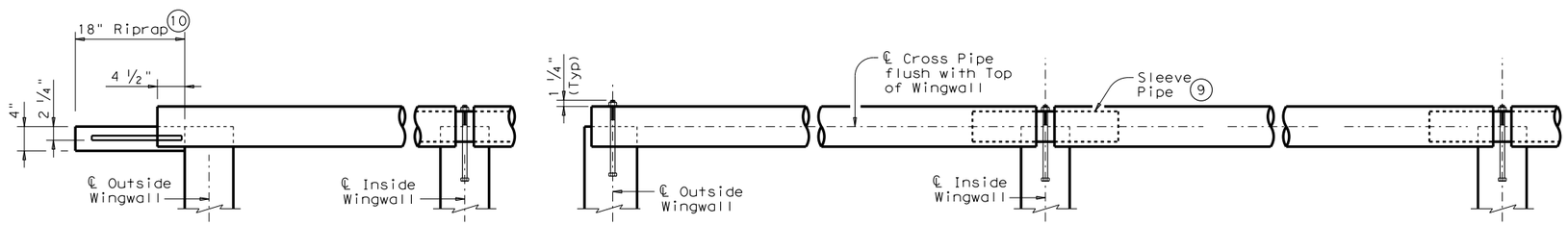

SECTION THROUGH INSTALLATION OF TYPICAL FULL CROSS PIPE

(Anchor details and dimensions are similar to those shown below in SECTION THROUGH INSTALLATION OF 3 ½" FIRST CROSS PIPE detail.)

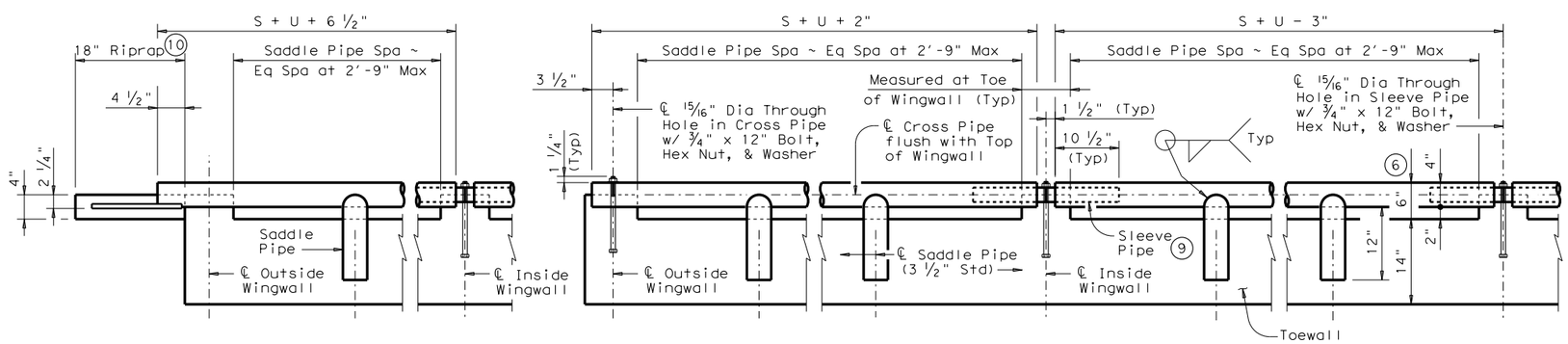

SECTION THROUGH INSTALLATION OF 3 ½" FIRST CROSS PIPE

OUTSIDE CULVERT BARREL WITH OPTIONAL ANCHOR BARS & RIPRAP

OUTSIDE CULVERT BARREL WITH BOLTED ANCHOR

INSIDE CULVERT BARREL

CROSS PIPE INSTALLATION DETAILS

SHEET 2 OF 2

Texas Department of Transportation — Bridge Division Standard

SAFETY END TREATMENT

FOR BOX CULVERTS
(MAXIMUM Hw = 7'-0")
TYPE I ~ PARALLEL DRAINAGE

SETB-PD

FILE: setbpdse.dgn	DN: GAF	CK: CAT	DW: JRP	CK: GAF
©TxDOT February 2010	CONT	SECT	JOB	HIGHWAY
REVISIONS	DIST	COUNTY		SHEET NO.

DISCLAIMER:
The use of this standard is governed by the "Texas Engineering Practice Act". No warranty of any kind is made by TxDOT for any purpose whatsoever. TxDOT assumes no responsibility for the conversion of this standard to other formats or for incorrect results or damages resulting from its use.

DATE:
FILE:

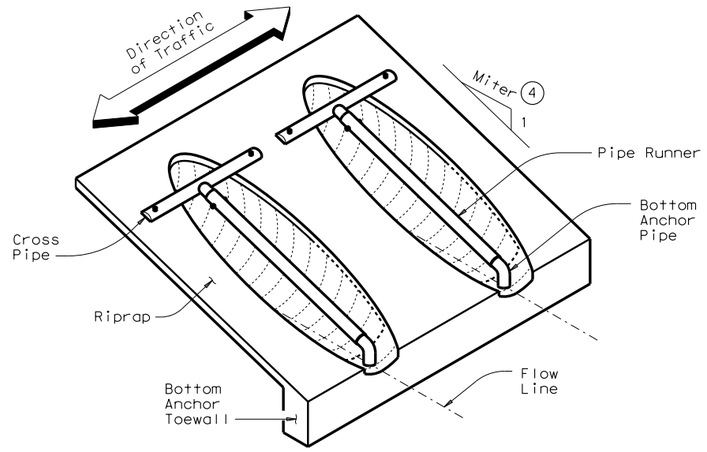

ISOMETRIC VIEW OF TYPICAL INSTALLATION

(Showing installation with no skew.)

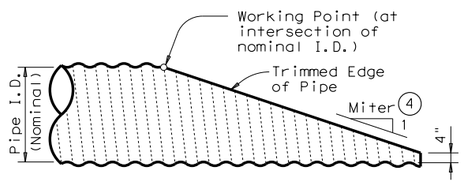

NOTE: All Pipe Runners, calculations, and dimensions are based on the pipe culverts mitered as shown in this detail. Alternate styles of mitered ends will require that appropriate adjustments be made to the values presented on this standard.

SIDE ELEVATION OF TYPICAL PIPE CULVERT MITER

(Showing Corrugated Metal Pipe Culvert. Details of Concrete Pipe Culvert are similar.)

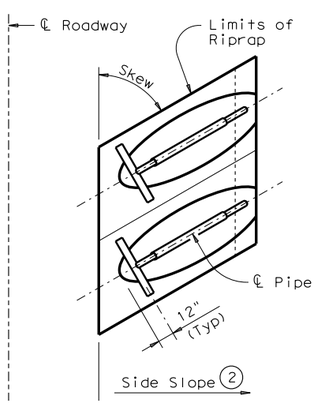

PLAN OF SKEWED INSTALLATION

(1) (3)

CROSS PIPE LENGTHS, PIPE RUNNER LENGTHS, & REQUIRED PIPE SIZES

CORRUGATED METAL PIPE CULVERTS

Design	Pipe Culvert Span	Pipe Culvert Rise	Pipe Culvert Spa ~ G	Cross Pipe Length	Pipe Runner Length											
					3:1 Side Slope				4:1 Side Slope				6:1 Side Slope			
					0° Skew	15° Skew	30° Skew	45° Skew	0° Skew	15° Skew	30° Skew	45° Skew	0° Skew	15° Skew	30° Skew	45° Skew
1	17"	13"	1′- 0"	N/A	N/A	N/A	N/A	N/A	N/A	N/A	N/A	N/A	N/A	N/A	N/A	N/A
2	21"	15"	1′- 2"	N/A	N/A	N/A	N/A	N/A	N/A	N/A	N/A	N/A	N/A	N/A	N/A	N/A
3	28"	20"	1′- 5"	3′- 9"	N/A	N/A	3′- 5"	4′- 7"	N/A	N/A	4′-11"	6′- 5"	N/A	N/A	7′-11"	10′- 2"
4	35"	24"	1′- 8"	4′- 4"	3′-10"	4′- 0"	4′- 7"	6′- 0"	5′- 5"	5′- 8"	6′- 6"	8′- 4"	8′- 8"	9′- 1"	10′- 3"	12′-11"
5	42"	29"	1′-11"	4′-11"	5′- 1"	5′- 4"	6′- 1"	7′-10"	7′- 2"	7′- 5"	8′- 6"	10′- 9"	11′- 2"	11′- 8"	13′- 2"	16′- 6"
6	49"	33"	2′- 2"	5′- 6"	6′- 2"	6′- 5"	7′- 4"	N/A	8′- 6"	8′-10"	10′- 0"	N/A	13′- 3"	13′- 9"	15′- 6"	N/A
7	57"	38"	2′- 5"	6′- 2"	7′- 6"	7′- 9"	N/A	N/A	10′- 2"	10′- 7"	N/A	N/A	15′- 9"	16′- 4"	N/A	N/A

CONCRETE PIPE CULVERTS

Design	Pipe Culvert Span	Pipe Culvert Rise	Pipe Culvert Spa ~ G	Cross Pipe Length	Pipe Runner Length											
					3:1 Side Slope				4:1 Side Slope				6:1 Side Slope			
					0° Skew	15° Skew	30° Skew	45° Skew	0° Skew	15° Skew	30° Skew	45° Skew	0° Skew	15° Skew	30° Skew	45° Skew
1	22"	13 1/2"	1′- 0"	N/A	N/A	N/A	N/A	N/A	N/A	N/A	N/A	N/A	N/A	N/A	N/A	N/A
2	26"	15 1/2"	1′- 2"	N/A	N/A	N/A	N/A	N/A	N/A	N/A	N/A	N/A	N/A	N/A	N/A	N/A
3	28 1/2"	18"	1′- 5"	3′-9 1/2"	N/A	N/A	2′-10"	3′-10"	N/A	N/A	4′- 2"	5′- 5"	N/A	N/A	6′- 9"	8′- 9"
4	36 1/4"	22 1/2"	1′- 8"	4′-5 1/4"	3′- 5"	3′- 7"	4′- 2"	5′- 6"	4′-11"	5′- 1"	5′-11"	7′- 7"	7′-11"	8′- 3"	9′- 5"	11′-11"
5	43 3/4"	26 5/8"	1′-11"	5′-0 3/4"	4′- 6"	4′- 8"	5′- 5"	6′-11"	6′- 4"	6′- 7"	7′- 6"	9′- 7"	10′- 0"	10′- 5"	11′- 9"	14′-10"
6	51 1/8"	31 5/16"	2′- 2"	5′- 8"	5′- 9"	6′- 0"	6′-10"	N/A	7′-11"	8′- 3"	9′- 4"	N/A	12′- 4"	12′-10"	14′- 6"	N/A
7	58 1/2"	36"	2′- 5"	6′-3 1/2"	6′-11"	7′- 3"	N/A	N/A	9′- 6"	9′-11"	N/A	N/A	14′- 9"	15′- 4"	N/A	N/A

TYPICAL PIPE CULVERT MITERS (4)

Side Slope	0° Skew	15° Skew	30° Skew	45° Skew
3:1	3:1	3.106:1	3.464:1	4.243:1
4:1	4:1	4.141:1	4.619:1	5.657:1
6:1	6:1	6.212:1	6.928:1	8.485:1

STANDARD PIPE SIZES & MAX PIPE RUNNER LENGTHS (1)

Pipe Size	Pipe O.D.	Pipe I.D.	Max Pipe Runner Length
2" STD	2.375"	2.067"	N/A
3" STD	3.500"	3.068"	10′- 0"
4" STD	4.500"	4.026"	19′- 8"
5" STD	5.563"	5.047"	34′- 2"

CONDITIONS WHERE PIPE RUNNERS (3) ARE NOT REQUIRED

Design	Single Pipe Culvert	Multiple Pipe Culverts
1 & 2	Skews thru 45°	Skews thru 45°
3	Skews thru 30°	Skews thru 15°
4	Normal (No Skew)	Always required
5 thru 7	Always required	Always required

(1) Size of Pipe Runner shall be as shown in the tables. Cross Pipe shall be the same size as the Pipe Runner. Cross Pipe Stub Out and Bottom Anchor Pipe shall be the next smaller size pipe as shown in the STANDARD PIPE SIZES table.

(2) Recommended values of slope are 3:1, 4:1, & 6:1. All quantities, calculations, and dimensions shown herein are based on these recommended values. Slope of 3:1 or flatter is required for vehicle safety.

(3) This standard allows for the placement of only one pipe runner across each culvert pipe opening. In order to limit the clear opening to be traversed by an errant vehicle, the following conditions must be met:

For Design 1 through 5 culvert pipe sizes, the skew must not exceed 45°.
For Design 6 culvert pipes, the skew must not exceed 30°.
For Design 7 culvert pipes, the skew must not exceed 15°.

If the above conditions cannot be met, the designer should consider using a safety end treatment with flared wings. For further information, refer to the TxDOT "Roadway Design Manual".

(4) Miter = Slope of Mitered Pipe Culvert End

GENERAL NOTES:

Pipe Runners are designed for a traversing load of 1,800 pounds at yield as recommended by Research Report 280-1, "Safety Treatment of Roadside Cross-Drainage Structures", Texas Transportation Institute, March 1981.

The Safety End Treatments shown herein are intended for use in those installations where out of control vehicles are likely to traverse the openings approximately perpendicular to the Pipe Runners.

Riprap and all necessary inverts shall be Concrete Riprap conforming to the requirements of Item 432, "Riprap".

Synthetic fibers listed on the "Fibers for Concrete" Material Producer List (MPL) may be used in lieu of steel reinforcing in riprap concrete unless noted otherwise.

Payment for riprap and toewall is included in the Price Bid for each Safety End Treatment.

Pipe Runners, Cross Pipes, and Anchor Pipes shall conform to the requirements of ASTM A53 (Type E or S, Grade B), ASTM A500 (Grade B), or API 5LX52.

Bolts and nuts shall conform to ASTM A307.

All steel components, except concrete reinforcing, shall be galvanized after fabrication. Galvanizing damaged during transport or construction shall be repaired in accordance with the specifications.

Texas Department of Transportation — Bridge Division Standard

SAFETY END TREATMENT

FOR DESIGN 1 TO 7
ARCH PIPE CULVERTS
TYPE II ~ CROSS DRAINAGE

SETP-CD-A

FILE: setpcase.dgn	DN: GAF	CK: CAT	DW: JRP	CK: GAF
©TxDOT February 2010	CONT	SECT	JOB	HIGHWAY
REVISIONS				
11-10: Add note for synthetic fibers.	DIST	COUNTY		SHEET NO.

DISCLAIMER:
The use of this standard is governed by the "Texas Engineering Practice Act". No warranty of any kind is made by TxDOT for any purpose whatsoever. TxDOT assumes no responsibility for the conversion of this standard to other formats or for incorrect results or damages resulting from its use.

DATE:
FILE:

DISCLAIMER:
The use of this standard is governed by the "Texas Engineering Practice Act". No warranty of any kind is made by TxDOT for any purpose whatsoever. TxDOT assumes no responsibility for the conversion of this standard to other formats or for incorrect results or damages resulting from its use.

ESTIMATED CONCRETE RIPRAP QUANTITIES (CY) (6)
BOTH CORRUGATED METAL PIPE CULVERTS AND CONCRETE PIPE CULVERTS

Design	3:1 Side Slope				4:1 Side Slope				6:1 Side Slope			
	0° Skew	15° Skew	30° Skew	45° Skew	0° Skew	15° Skew	30° Skew	45° Skew	0° Skew	15° Skew	30° Skew	45° Skew
1	0.5	0.5	0.5	0.6	0.6	0.6	0.6	0.7	0.7	0.7	0.8	0.9
2	0.5	0.5	0.6	0.6	0.6	0.6	0.6	0.7	0.7	0.8	0.8	1.0
3	0.6	0.6	0.7	0.8	0.7	0.7	0.8	0.9	0.9	1.0	1.0	1.2
4	0.7	0.7	0.8	0.9	0.8	0.9	0.9	1.0	1.1	1.1	1.2	1.4
5	0.8	0.8	0.9	1.0	1.0	1.0	1.1	1.2	1.3	1.3	1.4	1.7
6	0.9	1.0	1.0	N/A	1.1	1.1	1.2	N/A	1.4	1.5	1.6	N/A
7	1.0	1.1	N/A	N/A	1.3	1.3	N/A	N/A	1.7	1.7	N/A	N/A

(4) Miter = Slope of Mitered Pipe Culvert End

(5) Riprap placed beyond the limits shown will be paid as Concrete Riprap in accordance with Item 432, "Riprap".

(6) Quantities shown are for one end of one Pipe Culvert. For multiple Pipe Culverts, quantities will need to be adjusted. Riprap quantities are for Contractor's information only.

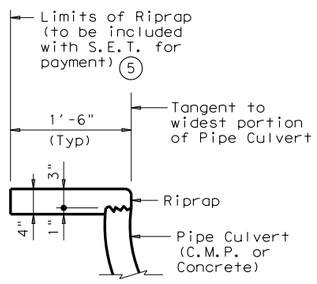

SHOWING TYPICAL PIPE CULVERT & RIPRAP

SECTION A-A

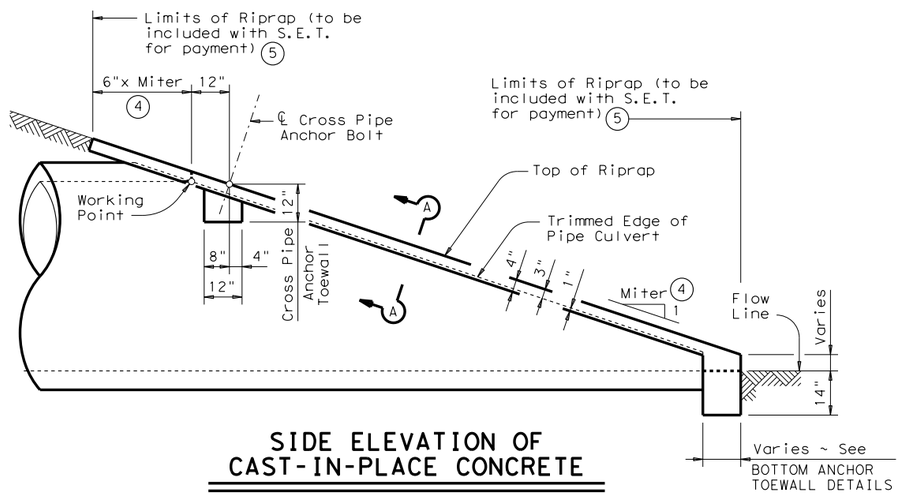

SIDE ELEVATION OF CAST-IN-PLACE CONCRETE

(Showing Concrete Pipe Culvert.
Details of Corrugated Metal Pipe Culvert are similar.
Pipe Runners not shown for clarity)

SHEET 2 OF 3

Texas Department of Transportation — Bridge Division Standard

SAFETY END TREATMENT
FOR DESIGN 1 TO 7
ARCH PIPE CULVERTS
TYPE II ~ CROSS DRAINAGE

SETP-CD-A

FILE: setpcase.dgn	DN: GAF	CK: CAT	DW: JRP	CK: GAF
©TxDOT February 2010	CONT	SECT	JOB	HIGHWAY
REVISIONS				
11-10: Add note for synthetic fibers.	DIST	COUNTY		SHEET NO.

DATE:
FILE:

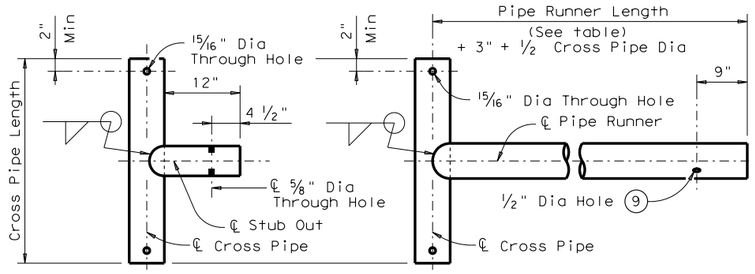

OPTION A1 OPTION A2

CROSS PIPE AND CONNECTIONS DETAILS

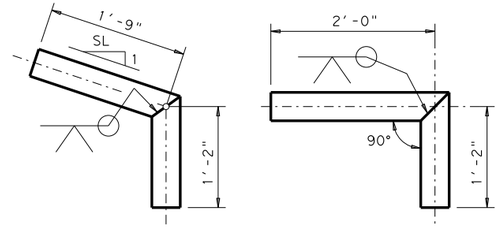

OPTION B1 OPTION B2

BOTTOM ANCHOR PIPE DETAILS (10)

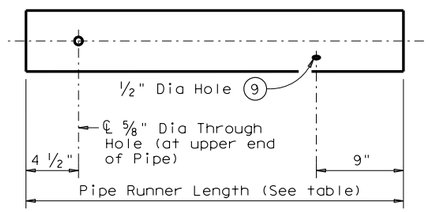

NOTE: The separate Pipe Runner shown is required when Cross Pipe Connection Option A1 is used.

PIPE RUNNER DETAILS

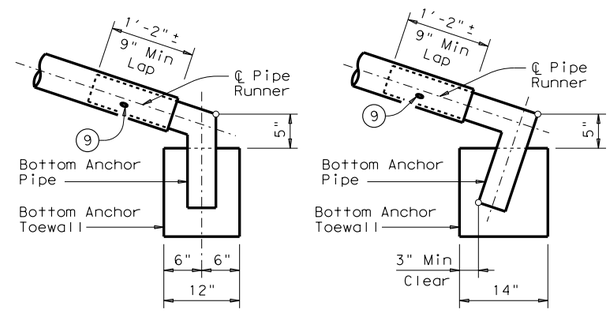

OPTION B1 OPTION B2

BOTTOM ANCHOR TOEWALL DETAILS

(Culvert & Riprap not shown for clarity)

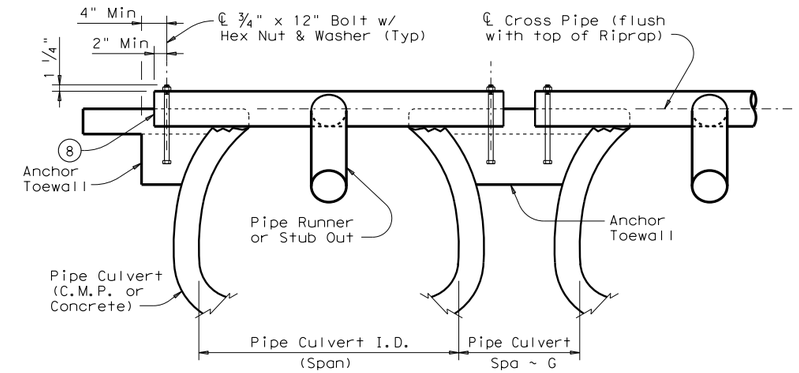

SHOWING CROSS PIPE & ANCHOR TOEWALL

SECTION A-A

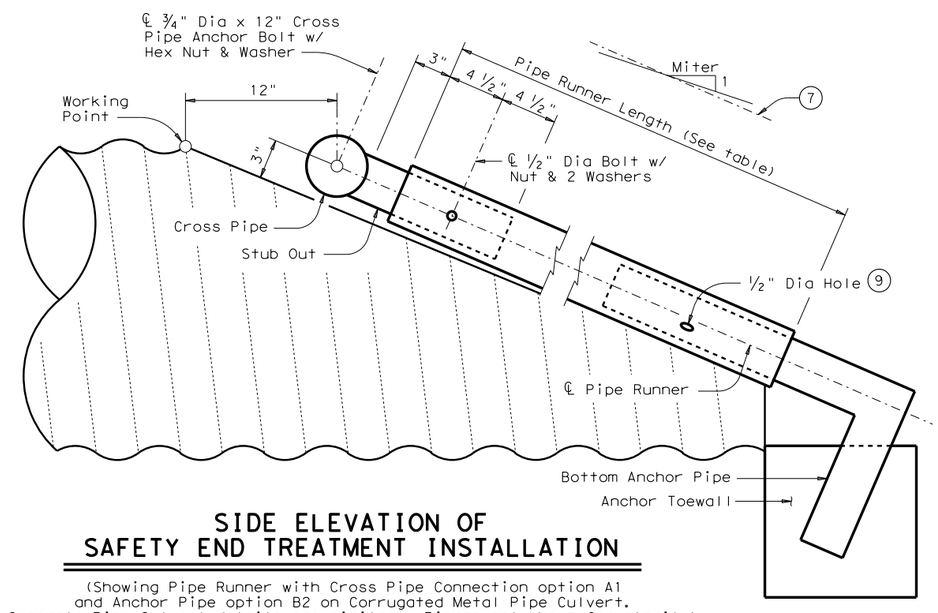

SIDE ELEVATION OF SAFETY END TREATMENT INSTALLATION

(Showing Pipe Runner with Cross Pipe Connection option A1 and Anchor Pipe option B2 on Corrugated Metal Pipe Culvert. Concrete Pipe Culvert details are similar. Riprap not shown for clarity)

(7) Note that actual slope of Pipe Runner may vary slightly from Side Slope of Riprap and trimmed Culvert Pipe edge.

(8) Care shall be taken to ensure that Riprap concrete does not flow into the Cross Pipe so as to permit disassembly of the bolted connection to allow cleanout access.

(9) After installation, the 1/2" hole shall be inspected to ensure that the lap of the Pipe Runner with the Bottom Anchor Pipe is adequate.

(10) At fabricator's option, a heat bend to a smooth 5" radius or a manufactured elbow (of the same material as the Runner) may be substituted for the mitered and welded joint in the Bottom Anchor Pipe.

DISCLAIMER:
The use of this standard is governed by the "Texas Engineering Practice Act". No warranty of any kind is made by TxDOT for any purpose whatsoever. TxDOT assumes no responsibility for the conversion of this standard to other formats or for incorrect results or damages resulting from its use.

DATE:
FILE:

SHEET 3 OF 3

Texas Department of Transportation — Bridge Division Standard

SAFETY END TREATMENT

FOR DESIGN 1 TO 7
ARCH PIPE CULVERTS
TYPE II ~ CROSS DRAINAGE

SETP-CD-A

FILE: setpcase.dgn	DN: GAF	CK: CAT	DW: JRP	CK: GAF
©TxDOT February 2010	CONT	SECT	JOB	HIGHWAY
REVISIONS				
11-10: Add note for synthetic fibers.	DIST	COUNTY		SHEET NO.

TABLE OF VARIABLE DIMENSIONS AND QUANTITIES FOR ONE HEADWALL (4)

SLOPE	DESIGN	SIZE OF PIPE ARCH Span	SIZE OF PIPE ARCH Rise	Values for one Pipe: W	X	Y	L	Reinf (Lbs)	Conc (CY) (1)	Values to be added for each addt'l Pipe: X and W	Reinf (Lbs)	Conc (CY) (1)
3:1	4	35"	24"	11'- 5 1/2"	4'- 2 3/4"	7'- 3"	8'- 4 1/2"	237	2.1	4'- 7"	83	1.0
	5	42"	29"	13'- 5 3/4"	4'- 9 3/4"	8'- 6"	9'- 9 3/4"	295	2.7	5'- 5"	113	1.3
	6	49"	33"	15'- 2 3/4"	5'- 4 3/4"	9'- 6"	10'-11 3/4"	339	3.3	6'- 3"	130	1.7
	7	57"	38"	17'- 4"	6'- 0 3/4"	10'- 9"	12'- 5"	394	4.2	7'- 2"	159	2.1
	8	64"	43"	19'- 4 1/4"	6'- 7 3/4"	12'- 0"	13'-10 1/4"	471	5.1	8'- 2"	199	2.6
	9	71"	47"	21'- 1 1/4"	7'- 2 3/4"	13'- 0"	15'- 0 1/4"	523	5.9	9'- 1"	226	3.1
4:1	4	35"	24"	14'- 3"	4'- 2 3/4"	9'- 8"	11'- 2"	311	2.9	4'- 7"	94	1.2
	5	42"	29"	16'- 9"	4'- 9 3/4"	11'- 4"	13'- 1"	375	3.9	5'- 5"	125	1.6
	6	49"	33"	18'-10 1/2"	5'- 4 3/4"	12'- 8"	14'- 7 1/2"	449	4.7	6'- 3"	152	2.0
	7	57"	38"	21'- 5 1/2"	6'- 0 3/4"	14'- 4"	16'- 6 3/4"	526	5.9	7'- 2"	180	2.6
	8	64"	43"	23'-11 3/4"	6'- 7 3/4"	16'- 0"	18'- 5 3/4"	625	7.2	8'- 2"	229	3.2
	9	71"	47"	26'- 1 1/4"	7'- 2 3/4"	17'- 4"	20'- 0 1/4"	698	8.4	9'- 1"	261	3.9
6:1	4	35"	24"	19'-10"	4'- 2 3/4"	14'- 6"	16'- 9"	464	5.0	4'- 7"	112	1.6
	5	42"	29"	23'- 3 1/2"	4'- 9 3/4"	17'- 0"	19'- 7 1/2"	581	6.6	5'- 5"	154	2.2
	6	49"	33"	26'- 2 1/4"	5'- 4 3/4"	19'- 0"	21'-11 1/4"	705	8.2	6'- 3"	187	2.8
	7	57"	38"	29'- 9"	6'- 0 3/4"	21'- 6"	24'-10"	846	10.3	7'- 2"	233	3.5
	8	64"	43"	33'- 2 1/2"	6'- 7 3/4"	24'- 0"	27'- 8 1/2"	990	12.6	8'- 2"	289	4.4
	9	71"	47"	36'- 1 1/4"	7'- 2 3/4"	26'- 0"	30'- 0 1/4"	1119	14.7	9'- 1"	336	5.3

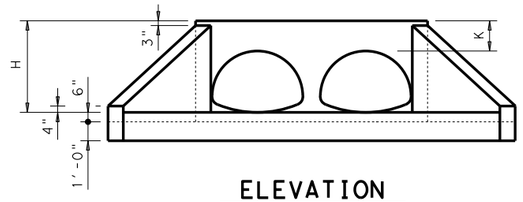

ELEVATION

Showing dimensions

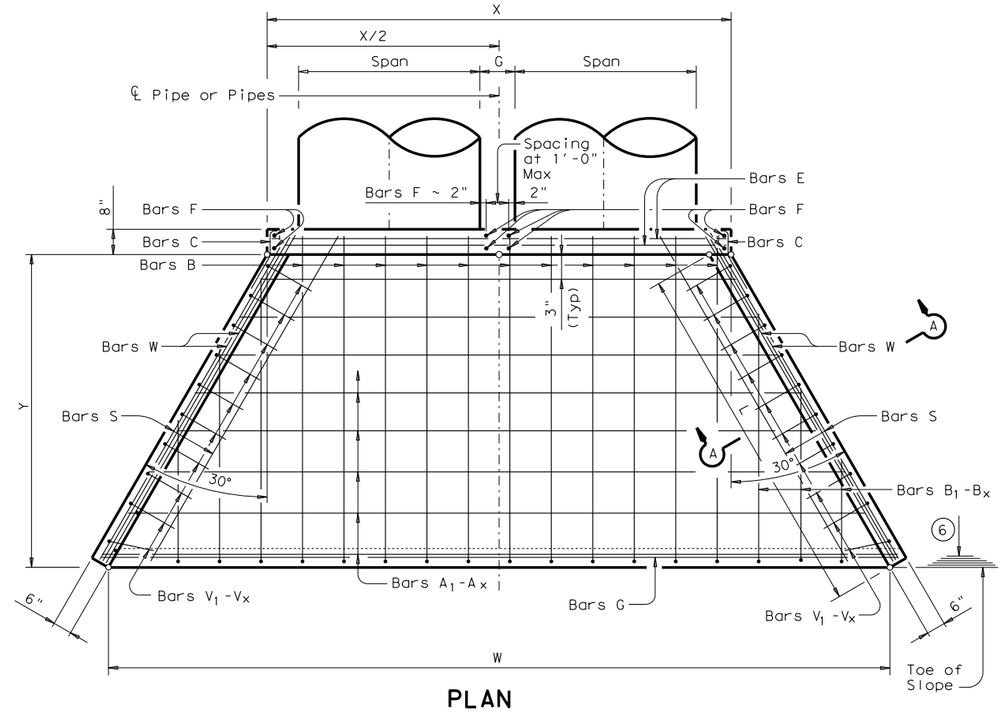

PLAN

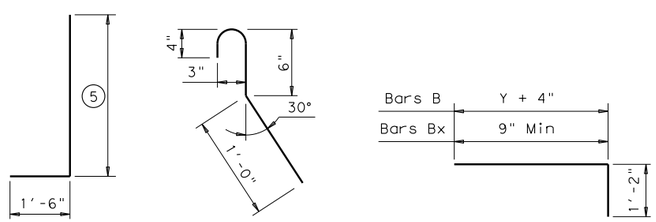

BARS V | **BARS C** (2'-0" long) | **BARS B & B1-Bx**

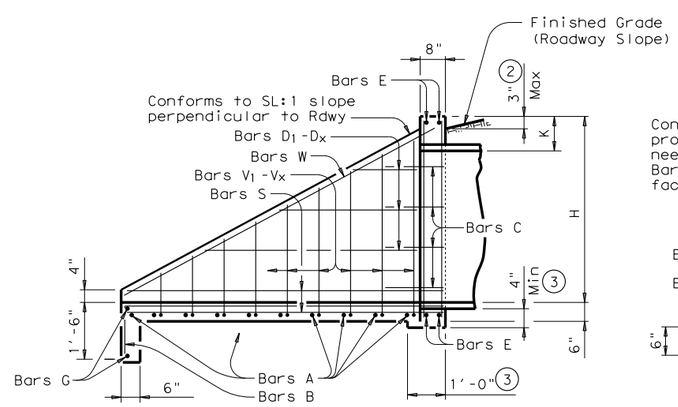

TYPICAL WING ELEVATION

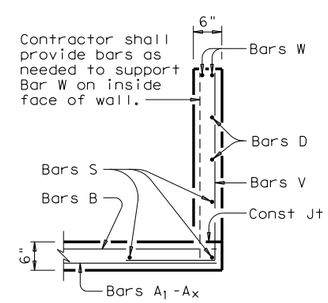

SECTION A-A

TABLE OF (4) REINFORCING STEEL

Bar	Size	Spa	No.
A	# 4	1'-0"	~
B	# 3	1'-6"	~
C	# 4	1'-0"	~
D	# 3	1'-0"	~
E	# 5	~	4
F	# 5	~	~
G	# 3	~	2
S	# 4	~	6
V	# 4	1'-0"	~
W	# 5	~	4

TABLE OF DIMENSIONS NOT VARIED WITH SLOPE

DESIGN	SIZE OF PIPE ARCH Span	SIZE OF PIPE ARCH Rise	G	K	H
4	35"	24"	1'- 8"	1'- 0"	3'- 0"
5	42"	29"	1'-11"	1'- 0"	3'- 5"
6	49"	33"	2'- 2"	1'- 0"	3'- 9"
7	57"	38"	2'- 5"	1'- 0"	4'- 2"
8	64"	43"	2'-10"	1'- 0"	4'- 7"
9	71"	47"	3'- 2"	1'- 0"	4'-11"

(1) Quantities shown are for metal pipe and will decrease slightly for concrete pipe installations.

(2) For vehicle safety, curbs shall project no more than 3" above finished grade. Curb heights shall be reduced, if necessary, to meet these requirements. No changes will be made in quantities and no additional compensation will be allowed for this work.

(3) Provide a 1'-0" footing as shown where required to maintain 4" Min cover for pipes.

(4) Quantities shown are for one structure end only (one headwall).

(5) Min Length = $6" + 3" \times \left(\frac{12 \times H - 7}{12 \times L}\right)$

Max Length = $12 \times H - 3" \times \left(\frac{12 \times H - 7}{12 \times L}\right) - 1"$

(6) Lengths of wings based on SL:1 Slope along this line.

GENERAL NOTES:

Designed according to AASHTO LRFD Specifications.

The Safety End Treatment shown herein are intended for use in those installations where out of control vehicles are likely to traverse the openings approximately perpendicular to the pipe runners.

The Safety Pipe Runners are designed for a traversing load of 1,800 pounds at yield as recommended by Research Report 280-1, "Safety Treatment of Roadside Cross-Drainage Structures", Texas Transportation Institute, March 1981.

Reinforcing steel shall be placed with the center of the outside layer of bars 2" from the surface of the concrete.

All reinforcing steel shall be Grade 60.

All concrete shall be Class "C" and shall have a minimum compressive strength of 3600 psi.

All bolts, nuts, washers, brackets, angles and pipe runners are considered parts of the Safety End Treatment for payment.

Pipe Runners shall conform to the requirements of ASTM A53 (Type E or S, Grade B), ASTM A500 (Grade B), or API 5LX52.

Bolts and nuts shall conform to ASTM A307. Steel plates shall conform to ASTM A36. All steel components, except reinforcing, shall be galvanized. Galvanizing damaged during transport or construction shall be repaired in accordance with the specifications.

DISCLAIMER:
The use of this standard is governed by the "Texas Engineering Practice Act". No warranty of any kind is made by TxDOT for any purpose whatsoever. TxDOT assumes no responsibility for the conversion of this standard to other formats or for incorrect results or damages resulting from its use.

SHEET 1 OF 3

Texas Department of Transportation — Bridge Division Standard

SAFETY END TREATMENT WITH FLARED WINGS

FOR 0° SKEW ARCH PIPE CULVERTS
TYPE I ~ CROSS DRAINAGE

SETP-FW-A-0

FILE: stpa00se.dgn	DN: GAF	CK: CAT	DW: BWH	CK: GAF
©TxDOT February 2010	CONT	SECT	JOB	HIGHWAY
REVISIONS				
11-10: Removed Bars T.	DIST	COUNTY		SHEET NO.

DATE:
FILE:

DISCLAIMER:
The use of this standard is governed by the "Texas Engineering Practice Act". No warranty of any kind is made by TxDOT for any purpose whatsoever. TxDOT assumes no responsibility for the conversion of this standard to other formats or for incorrect results or damages resulting from its use.

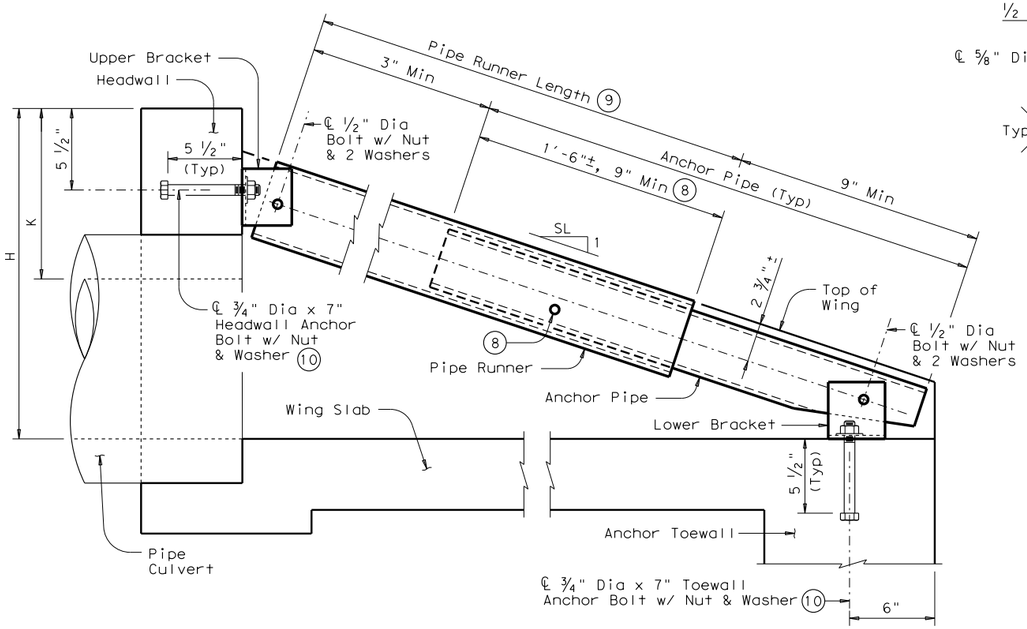

SECTION B-B

(Showing Headwall Pipe Runner. Except for upper bracket, Wingwall Pipe Runners are similar.)

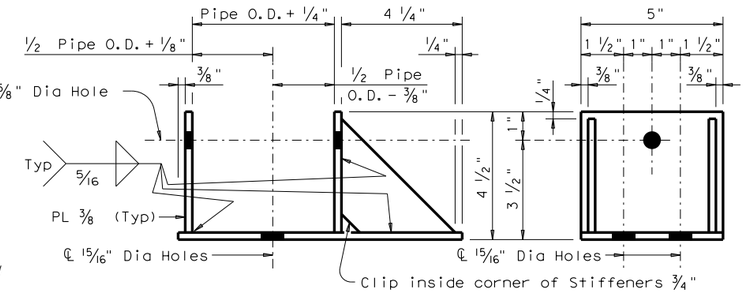

ELEVATION

SIDE VIEW

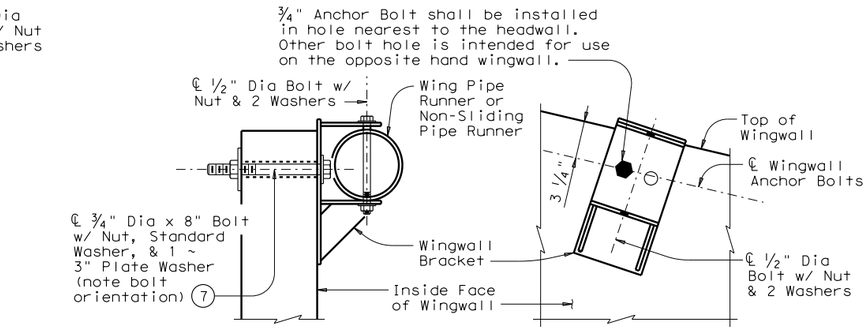

SECTION C-C

(Showing installed bracket.)

ELEVATION

(Showing installed bracket normal to Wall. Pipe not shown for clarity.)

NOTE: Wingwall Bracket shall match the Upper Bracket size.

WINGWALL BRACKET DETAILS

(7) At Contractor's option, 7/8" diameter hole may be formed or cored drilled. Percussion drilling is not permitted. Adjust placement of reinforcing steel as necessary to avoid bolt holes.

(8) After installation of the Pipe Runner, the 1/2" inspection hole shall be utilized to ensure that the lap of the Anchor Pipe with the Pipe Runner is adequate.

(9) Non-Sliding Pipe Runners are used for those installations that would require Pipe Runner lengths of 1'-9" or less. The Non-Sliding Pipe Runner, when required, replaces the outermost Pipe Runner and Anchor Pipe. See table on Sheet 3 of 3 to determine if the Non-Sliding Pipe Runner is required.

(10) At Contractor's option, an epoxy anchorage system may be used. Anchorage system chosen must be able to achieve an ultimate tensile resistance of 20 kips. Anchor diameter shall be 3/4". The Contractor must provide evidence to the Engineer that this can be achieved. Evidence of adequate tensile resistance can be based on the manufacturer's published values of ultimate tensile strength (anchor spacing and edge distance must be accounted for). Anchor installation, including hole size, drilling, and clean-out, must be in accordance with the manufacturer's recommendations.

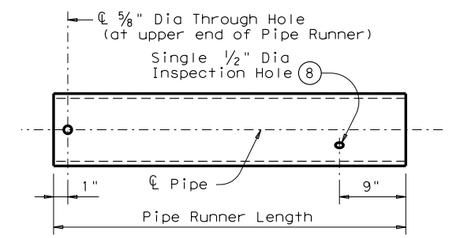

Note: Pipe diameter required for Headwall pipe runner shall also be used for wingwall pipe runner.

PIPE RUNNER DETAILS

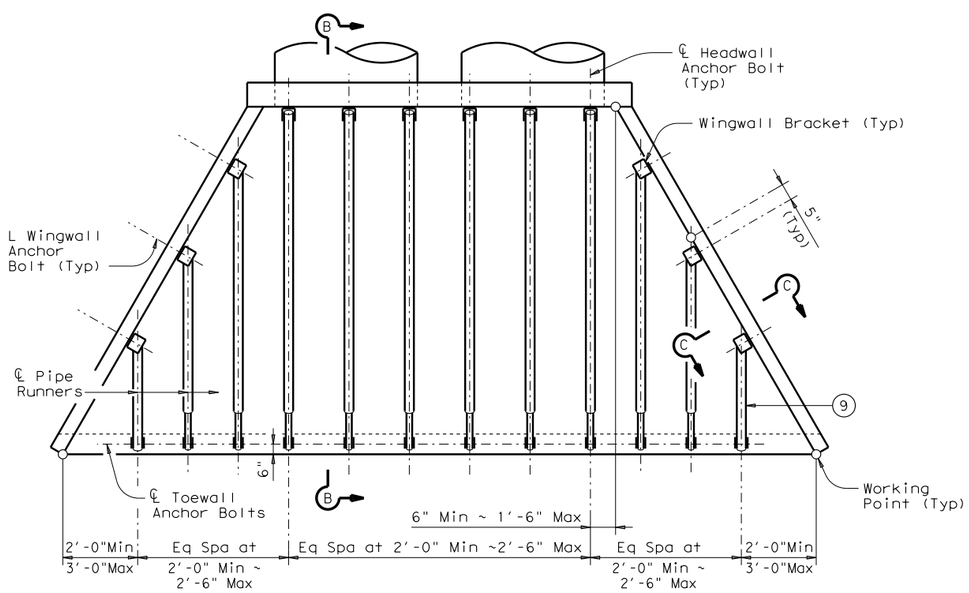

PIPE RUNNER PLAN

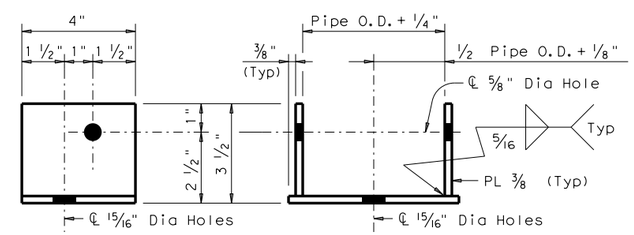

SIDE VIEW

ELEVATION

NOTE: Upper and Lower Brackets shall, except for the Brackets used with Non-Sliding Pipe Runners, match the required pipe diameters as shown in the table.

UPPER & LOWER BRACKET DETAILS

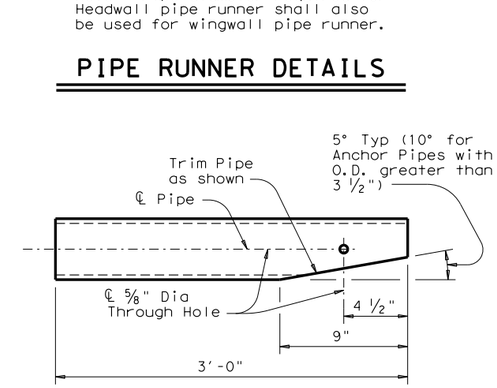

ANCHOR PIPE DETAILS

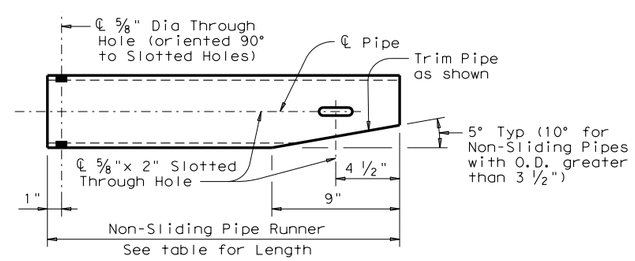

Note: Pipe size shall be same as required for headwall pipe runner. Adjust the corresponding Lower Bracket accordingly.

NON-SLIDING PIPE RUNNER DETAILS (9)

SHEET 2 OF 3

Texas Department of Transportation — Bridge Division Standard

SAFETY END TREATMENT WITH FLARED WINGS

FOR 0° SKEW ARCH PIPE CULVERTS
TYPE I ~ CROSS DRAINAGE

SETP-FW-A-0

FILE: stpa00se.dgn	DN: GAF	CK: CAT	DW: TxDOT	CK: GAF
©TxDOT February 2010	CONT	SECT	JOB	HIGHWAY
REVISIONS				
11-10: Removed Bars T.	DIST	COUNTY		SHEET NO.

DATE:
FILE:

Side Slope	Arch Pipe Culvert Design	L1 (Ft-In)	P1 (Ft-In)	Number of Spaces in L3	L3 Overall Dimension (Ft-In)	P2 (Ft-In)	Number of Spaces in L4	L4 Overall Dimension (Ft-In)	Headwall Pipe Runner Length (Ft-In)	No. of Wing Pipes (12)	Longest Wingwall Pipe Runner Length (Ft-In)	Shortest Wingwall Pipe Runner Length (Ft-In)	Non-Sliding Pipe Length (Ft-In)	Pipe Runner Size (13)	Total Length of Wingwall Pipe Runners (Ft-In) (12)
3:1	4	6"	2'- 3"	1	2'- 5 1/4"	4'- 1"	0	N/A	5'-11 1/2"	2	2'- 0 1/2"	2'- 0 1/2"	N/A	3" STD	4'- 1"
	5	7"	3'- 0"	1	2'- 6"	5'- 7"	0	N/A	7'- 3 1/4"	2	3'- 5"	3'- 5"	N/A	3" STD	6'-10"
	6	1'- 0"	2'- 0"	2	4'- 5 3/4"	3'- 7"	1	4'- 5 3/4"	8'- 4"	4	5'- 8 1/4"	5'- 8 1/4"	3'- 1"	4" STD	17'- 6 1/2"
	7	1'- 3"	2'- 6"	2	4'-11 1/2"	4'- 7"	1	4'-11 1/2"	9'- 7 3/4"	4	7'- 0 1/4"	2'- 6"	N/A	4" STD	19'- 0 1/2"
	8	6"	2'- 6"	2	4'-11 1/4"	4'- 7"	1	4'-11 1/4"	10'-11 1/2"	4	7'- 0"	2'- 6"	N/A	4" STD	19'- 0"
	9	9"	2'- 0"	3	6'- 3"	3'- 7"	2	8'- 4"	12'- 0 1/4"	6	9'- 2 1/2"	5'- 4 3/4"	3'- 1"	4" STD	35'- 4 1/2"
4:1	4	6"	2'- 0"	2	4'- 1"	3'- 7"	1	4'- 1"	8'- 3 1/4"	4	5'- 1 3/4"	5'- 1 3/4"	3'- 0"	4" STD	16'- 3 1/2"
	5	7"	2'- 2"	2	4'-11 1/2"	3'-11"	1	4'-11 1/2"	10'- 0"	4	6'- 2 3/4"	1'- 9 3/4"	N/A	4" STD	16'- 1"
	6	1'- 0"	2'- 0"	3	6'- 3 3/4"	3'- 7"	2	8'- 5"	11'- 4 1/2"	6	9'- 0 1/4"	5'- 3 1/4"	3'- 0"	4" STD	34'- 7"
	7	1'- 3"	2'- 0"	3	7'- 6 1/4"	3'- 7"	2	10'- 0 1/2"	13'- 1"	6	10'- 5 1/2"	5'-11 3/4"	3'- 0"	4" STD	38'-10 1/2"
	8	6"	2'- 3"	3	7'- 5 3/4"	4'- 1"	2	9'-11 3/4"	14'- 9 3/4"	6	10'-10 1/4"	1'-11 1/2"	N/A	5" STD	38'- 5 1/4"
	9	9"	2'- 0"	4	8'- 9"	3'- 7"	3	13'- 1 3/4"	16'- 2 1/4"	8	13'- 2 3/4"	5'- 5"	3'- 0"	5" STD	61'-11 1/4"
6:1	4	6"	2'- 0"	3	6'-10 1/2"	3'- 7"	2	9'- 2"	13'- 0 1/4"	6	9'- 6"	5'- 5 3/4"	2'-11 1/2"	4" STD	35'-10 1/2"
	5	7"	3'- 0"	3	7'- 4 3/4"	5'- 7"	2	9'-10 1/4"	15'- 6 1/2"	6	11'-10 1/2"	3'- 2 1/2"	N/A	5" STD	45'- 3"
	6	1'- 0"	2'- 0"	4	9'-11 3/4"	3'- 7"	3	14'-11 1/2"	17'- 7"	8	14'- 7"	5'-10"	2'-11 1/2"	5" STD	67'- 2"
	7	1'- 3"	2'- 0"	5	11'- 8"	3'- 7"	4	18'- 8"	20'- 1 1/4"	10	17'-10"	5'- 6 1/2"	2'-11 1/2"	5" STD	99'- 5"
	8	6"	2'- 0"	5	12'- 4 1/4"	3'- 7"	4	19'- 9 1/4"	22'- 7 3/4"	10	18'- 9 3/4"	5'- 9 1/2"	2'-11 1/2"	5" STD	104'- 4"
	9	9"	2'- 0"	6	13'- 9 1/4"	3'- 7"	5	22'-11 1/4"	24'- 8"	12	21'- 7"	5'- 5 3/4"	2'-11 1/2"	5" STD	141'- 2 3/4"

(11) If the outermost Wing Pipe Runner is a Non-Sliding Pipe Runner, the next outermost Wing Pipe Runner shall be considered the Shortest.

(12) Quantities shown include, if present, the Non-Sliding Pipes.

(13) Anchor Pipe size shall be the next smaller size than the Pipe Runner size.

Arch Pipe Culvert Design	Number of Pipe Culverts	No. of L2 Spaces	L2 Overall Dimension (Ft-In)	Number of Headwall Pipes
4	1	1	2'- 1"	2
	2	3	6'- 8"	4
	3	5	11'- 3"	6
	4	7	15'-10"	8
	5	9	20'- 5"	10
	6	10	25'- 0"	11
5	1	1	2'- 6"	2
	2	4	7'-11"	5
	3	6	13'- 4"	7
	4	8	18'- 9"	9
	5	10	24'- 2"	11
	6	12	29'- 7"	13
6	1	1	2'- 3"	2
	2	4	8'- 6"	5
	3	6	14'- 9"	7
	4	9	21'- 0"	10
	5	11	27'- 3"	12
	6	14	33'- 6"	15
7	1	1	2'- 5"	2
	2	4	9'- 7"	5
	3	7	16'- 9"	8
	4	10	23'-11"	11
	5	13	31'- 1"	14
	6	16	38'- 3"	17
8	1	2	4'- 6"	3
	2	6	12'- 8"	7
	3	9	20'-10"	10
	4	12	29'- 0"	13
	5	15	37'- 2"	16
	6	19	45'- 4"	20
9	1	2	4'- 7"	3
	2	6	13'- 8"	7
	3	10	22'- 9"	11
	4	13	31'-10"	14
	5	17	40'-11"	18
	6	20	50'- 0"	21

STANDARD PIPE RUNNER AND ANCHOR PIPE SIZES (13)

Pipe Size	Pipe O.D.	Pipe I.D.
2" STD	2.375"	2.067"
3" STD	3.500"	3.068"
4" STD	4.500"	4.026"
5" STD	5.563"	5.047"

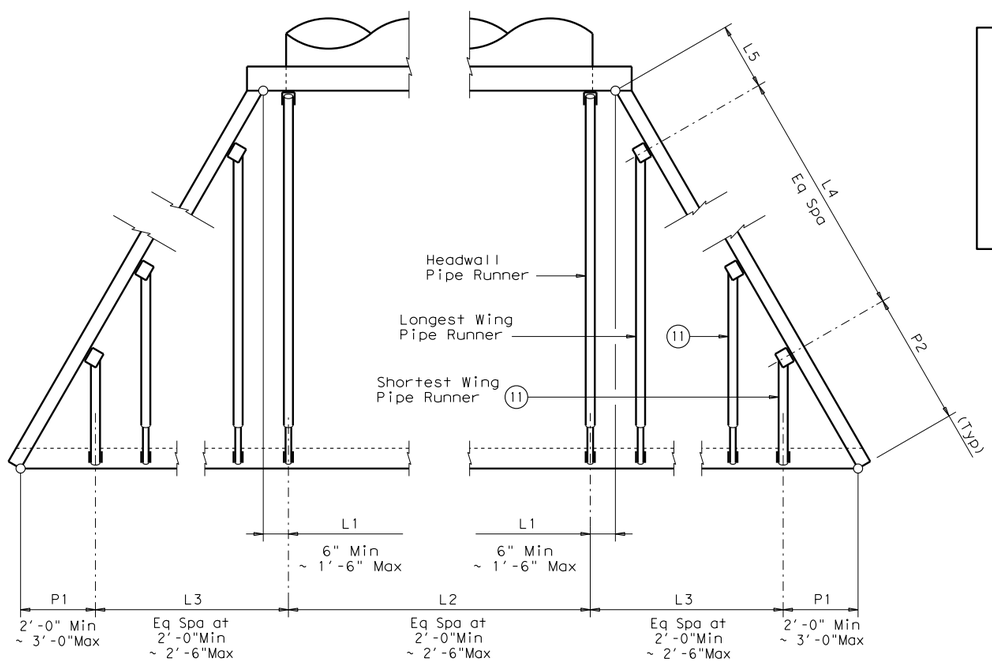

PIPE RUNNER LAYOUT

TOTAL PIPE LENGTHS FORMULAS:

Total Length of All Pipe Runners = Total Length of Wingwall Pipe Runners + (No. of Headwall Pipe Runners) (Headwall Pipe Runner Length)

Total Length of All Anchor Pipes = (3.000') (No. of Wing Pipe Runners + No. of Headwall Pipe Runners − No. of Non-Sliding Pipe Runners)

SPECIAL NOTE:

Note that the tabular quantities are given for estimating purposes only. It is likely that these quantities will change due to field conditions. Therefore, all dimensions shall be verified by the Contractor in the field prior to fabrication of the Safety End Treatment components.

DISCLAIMER:
The use of this standard is governed by the "Texas Engineering Practice Act". No warranty of any kind is made by TxDOT for any purpose whatsoever. TxDOT assumes no responsibility for the conversion of this standard to other formats or for incorrect results or damages resulting from its use.

DATE:
FILE:

SHEET 3 OF 3

Texas Department of Transportation — Bridge Division Standard

SAFETY END TREATMENT WITH FLARED WINGS

FOR 0° SKEW ARCH PIPE CULVERTS
TYPE I ~ CROSS DRAINAGE

SETP-FW-A-0

FILE: stpa00se.dgn	DN: GAF	CK: CAT	DW: TxDOT	CK: GAF
©TxDOT February 2010	CONT	SECT	JOB	HIGHWAY
REVISIONS				
11-10: Removed Bars T.	DIST	COUNTY		SHEET NO.

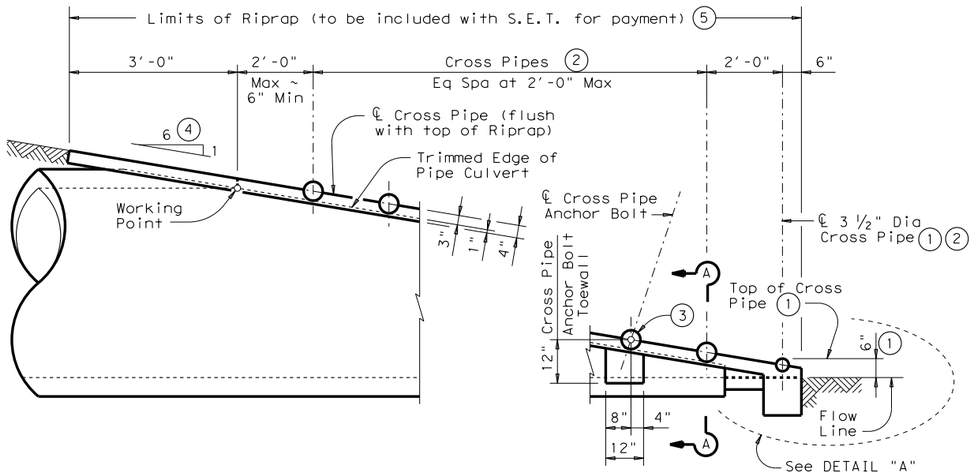

SIDE ELEVATION OF CAST-IN-PLACE CONCRETE

(Showing Concrete Pipe Culvert.)
(Details at Corrugated Metal Pipe Culvert are similar.)

CROSS PIPE LENGTHS & REQUIRED PIPE SIZES (2)

CORRUGATED METAL PIPE CULVERTS

Design	Conc Riprap (CY) (6)	Pipe Culvert Span	Pipe Culvert Rise	Pipe Culvert Spa ~ G	Single Barrel ~ Q1	Multi-Barrel ~ Q1	Q2	Conditions for use of Cross Pipes	Cross Pipe Size
1	0.6	17"	13"	1'- 0"	N/A	2'- 8"	2'- 5"	3 or more Pipe Culverts	3" Std (3.500" O.D.)
2	0.7	21"	15"	1'- 2"	N/A	3'- 1"	2'-11"		
3	0.9	28"	20"	1'- 5"	N/A	3'- 9"	3'- 9"	3 or more Pipe Culverts	3 1/2" Std (4.000" O.D.)
4	1.0	35"	24"	1'- 8"	4'- 4"	4'- 6"	4'- 7"	All Pipe Culverts	4" Std (4.500" O.D.)
5	1.2	42"	29"	1'-11"	4'-11"	5'- 2"	5'- 5"		
6	1.4	49"	33"	2'- 2"	5'- 6"	5'-11"	6'- 3"	All Pipe Culverts	5" Std (5.563" O.D.)
7	1.6	57"	38"	2'- 5"	6'- 2"	6'- 8"	7'- 2"		
8	1.8	64"	43"	2'-10"	6'- 9"	7'- 6"	8'- 2"		
9	1.9	71"	47"	3'- 2"	7'- 4"	8'- 3"	9'- 1"		

CONCRETE PIPE CULVERTS

Design	Conc Riprap (CY) (6)	Pipe Culvert Span	Pipe Culvert Rise	Pipe Culvert Spa ~ G	Single Barrel ~ Q1	Multi-Barrel ~ Q1	Q2	Conditions for use of Cross Pipes	Cross Pipe Size
1	0.6	22"	13 1/2"	1'- 0"	N/A	3'- 1"	2'-10"	3 or more Pipe Culverts	3" Std (3.500" O.D.)
2	0.7	26"	15 1/2"	1'- 2"	N/A	3'- 6"	3'- 4"		
3	0.9	28 1/2"	18"	1'- 5"	N/A	3'-10"	3'-9 1/2"	3 or more Pipe Culverts	3 1/2" Std (4.000" O.D.)
4	1.0	36 1/4"	22 1/2"	1'- 8"	4'- 5"	4'- 7"	4'-8 1/4"	All Pipe Culverts	4" Std (4.500" O.D.)
5	1.2	43 3/4"	26 5/8"	1'-11"	5'- 1"	5'- 4"	5'-6 3/4"		
6	1.4	51 1/8"	31 5/16"	2'- 2"	5'- 8"	6'- 1"	6'-5 1/4"	All Pipe Culverts	5" Std (5.563" O.D.)
7	1.6	58 1/2"	36"	2'- 5"	6'- 4"	6'-10"	7'-3 1/2"		
8	1.8	65"	40"	2'-10"	6'-10"	7'- 7"	8'- 3"		
9	1.9	73"	45"	3'- 2"	7'- 6"	8'- 5"	9'- 3"		

(1) The proper installation of the first Cross Pipe is critical for vehicle safety. The top of the first Cross Pipe must be placed at no more than 6" above the flow line.

(2) Size of Cross Pipes, except the first bottom pipe, shall be as shown in the PIPE SIZE table. The first bottom pipe shall be 3 1/2" Standard Pipe (4" O.D.).

(3) The third Cross Pipe from the bottom of the Culvert shall always be installed using a bolted connection. Care shall be taken to ensure that Riprap concrete does not flow into the Cross Pipe so as to permit disassembly of the bolted connection to allow cleanout access. At the Contractor's option, all other Cross Pipes may also be installed using the bolted connection details.

(4) Match Cross Slope as shown elsewhere in the plans. Cross Slope of 6:1 or flatter is required for vehicle safety.

(5) Riprap placed beyond the limits shown will be paid as Concrete Riprap in accordance with Item 432, "Riprap".

(6) Quantities shown are for one end of one Pipe Culvert. For multiple Pipe Culverts, quantities will need to be adjusted. Riprap quantities are for Contractor's information only.

GENERAL NOTES:

Cross Pipes are designed for a traversing load of 10,000 pounds at yield as recommended by Research Report 280-2F, "Safety Treatment of Roadside Parallel-Drainage Structures", Texas Transportation Institute, March 1981.

Safety End Treatments shown herein are intended for use in those installations where out of control vehicles are likely to traverse the openings approximately perpendicular to the Cross Pipes.

Riprap and all necessary inverts shall be Concrete Riprap conforming to the requirements of Item 432, "Riprap".

Synthetic fibers listed on the "Fibers for Concrete" Material Producer List (MPL) may be used in lieu of steel reinforcing in riprap concrete unless noted otherwise.

Payment for riprap and toewall is included in the Price Bid for each Safety End Treatment.

Cross Pipes shall conform to the requirements of ASTM A53 (Type E or S, Grade B), ASTM A500 (Grade B), or API 5LX52.

Bolts and nuts shall conform to ASTM A307.

All steel components, except concrete reinforcing, shall be galvanized after fabrication. Galvanizing damaged during transport or construction shall be repaired in accordance with the specifications.

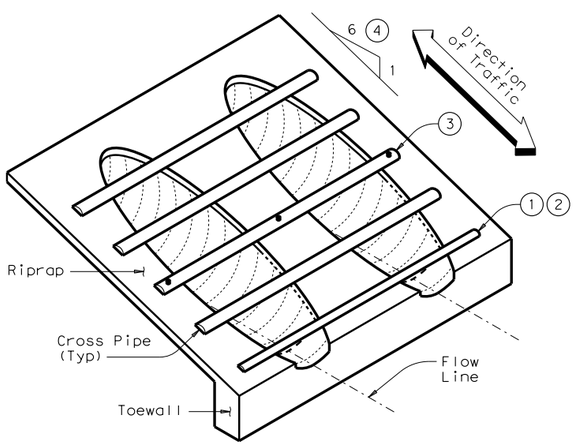

ISOMETRIC VIEW OF TYPICAL INSTALLATION

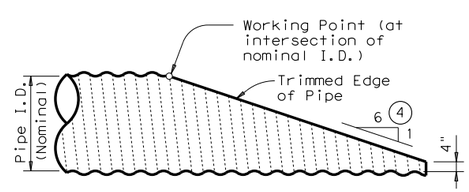

NOTE: All Cross Pipes, calculations, and dimensions are based on the pipe culverts mitered as shown in this detail. Alternate styles of mitered ends will require that appropriate adjustments be made to the values presented on this standard.

SIDE ELEVATION OF TYPICAL PIPE CULVERT MITER

(Showing Corrugated Metal Pipe Culvert.)
(Details at Concrete Pipe Culvert are similar.)

SHEET 1 OF 2

Texas Department of Transportation — Bridge Division Standard

SAFETY END TREATMENT

FOR DESIGN 1 TO 9
ARCH PIPE CULVERTS
TYPE II ~ PARALLEL DRAINAGE

SETP-PD-A

FILE: setppase.dgn	DN: GAF	CK: TxDOT	DW: JRP	CK: GAF
©TxDOT February 2010	CONT	SECT	JOB	HIGHWAY
REVISIONS				
11-10: Add note for synthetic fibers.	DIST	COUNTY		SHEET NO.

DISCLAIMER:
The use of this standard is governed by the "Texas Engineering Practice Act". No warranty of any kind is made by TxDOT for any purpose whatsoever. TxDOT assumes no responsibility for the conversion of this standard to other formats or for incorrect results or damages resulting from its use.

DATE:
FILE:

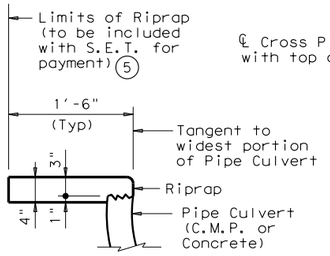

SHOWING TYPICAL PIPE CULVERT & RIPRAP

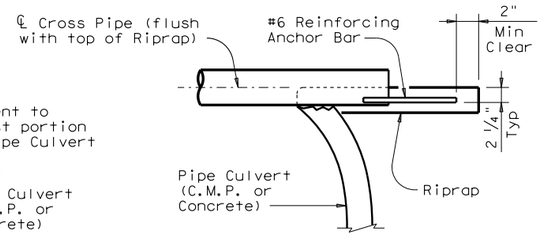

SHOWING CROSS PIPE WITH ANCHOR BAR

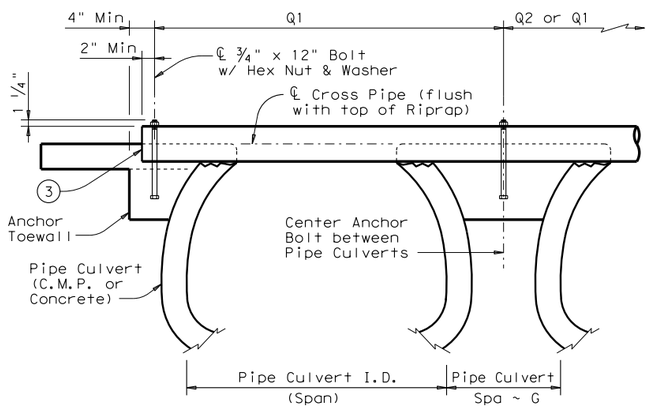

SHOWING CROSS PIPE WITH BOLTED ANCHOR

SECTION A-A

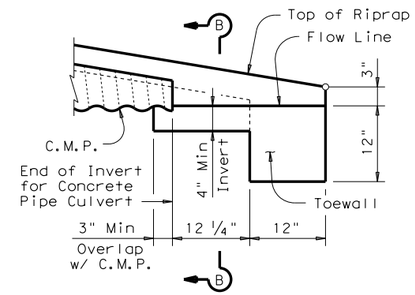

DETAIL "A"

(Showing Invert with Corrugated Metal Pipe Culvert. Concrete Pipe Culvert details are similar. Cross Pipes not shown for clarity.)

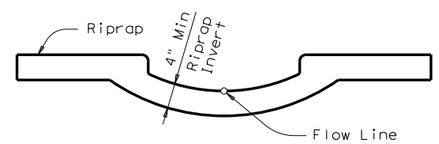

SECTION B-B

(Cross Pipes not shown for clarity.)

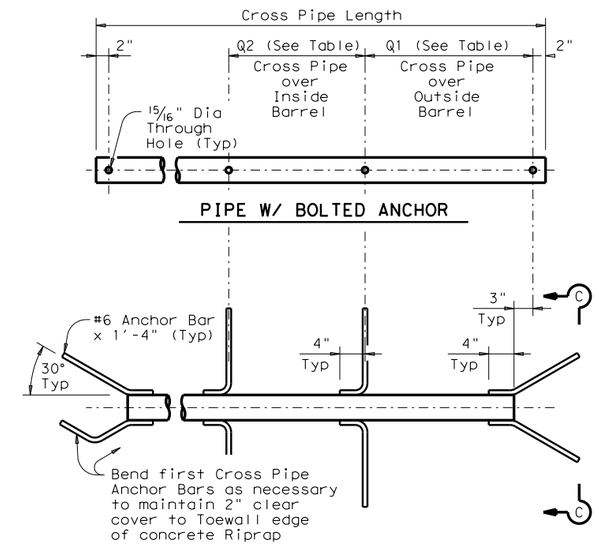

PIPE W/ ANCHOR BARS

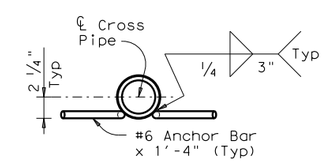

SECTION C-C

CROSS PIPE DETAILS

DISCLAIMER:
The use of this standard is governed by the "Texas Engineering Practice Act". No warranty of any kind is made by TxDOT for any purpose whatsoever. TxDOT assumes no responsibility for the conversion of this standard to other formats or for incorrect results or damages resulting from its use.

DATE:
FILE:

SHEET 2 OF 2

Texas Department of Transportation — Bridge Division Standard

SAFETY END TREATMENT

FOR DESIGN 1 TO 9
ARCH PIPE CULVERTS
TYPE II ~ PARALLEL DRAINAGE

SETP-PD-A

FILE: setppase.dgn	DN: GAF	CK: TxDOT	DW: JRP	CK: GAF
©TxDOT February 2010	CONT	SECT	JOB	HIGHWAY
REVISIONS				
11-10: Add note for synthetic fibers.	DIST	COUNTY		SHEET NO.

DISCLAIMER: The use of this standard is governed by the "Texas Engineering Practice Act". No warranty of any kind is made by TxDOT for any purpose whatsoever. TxDOT assumes no responsibility for the conversion of this standard to other formats or for incorrect results or damages resulting from its use.

SIGN SUPPORT DESCRIPTIVE CODES

(Descriptive Codes correspond to project estimate and quantities sheets)

SM RD SGN ASSM TY XXXXX(X)XX(X-XXXX)

Post Type

FRP = Fiberglass Reinforced Plastic Pipe (see SMD(FRP))
TWT = Thin-Walled Tubing (see SMD(TWT))
10BWG = 10 BWG Tubing (see SMD(SLIP-1) to (SLIP-3))
S80 = Schedule 80 Pipe (see SMD(SLIP-1) to (SLIP-3))

Number of Posts (1 or 2)

Anchor Type

UA = Universal Anchor - Concreted (see SMD(FRP) and (TWT))
UB = Universal Anchor - Bolted down (see SMD(FRP) and (TWT))
WS = Wedge Anchor Steel - (see SMD(TWT))
WP = Wedge Anchor Plastic (see SMD(TWT))
SA = Slipbase - Concreted (see SMD(SLIP-1) to (SLIP-3))
SB = Slipbase - Bolted Down (see SMD(SLIP-1) to (SLIP-3))

Sign Mounting Designation

P = Prefab. "Plain" (see SMD(SLIP-1) to (SLIP-3), (TWT), (FRP))
T = Prefab. "T" (see SMD(SLIP-1) to (SLIP-3), (TWT))
U = Prefab. "U" (see SMD(SLIP-1) to (SLIP-3))
IF REQUIRED
1EXT or 2EXT = Number of Extensions (see SMD(SLIP-1) to (SLIP-3), (TWT))
BM = Extruded Wind Beam (see SMD(SLIP-1) to (SLIP-3))
WC = 1.12 #/ft Wing Channel (see SMD(SLIP-1) to (SLIP-3))
EXAL = Extruded Aluminum Sign Panels (see SMD(SLIP-3))

REQUIRED CLEARANCE FOR BREAKAWAY SUPPORT

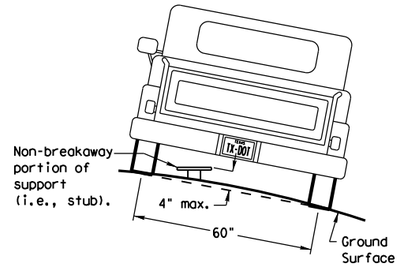

To avoid vehicle undercarriage snagging, any substantial remains of a breakaway support, when it is broken away, should not project more than 4 inches above a 60-inch chord (i.e., typical space between wheel paths).

No more than 2 sign posts should be located within a 7 ft. circle.

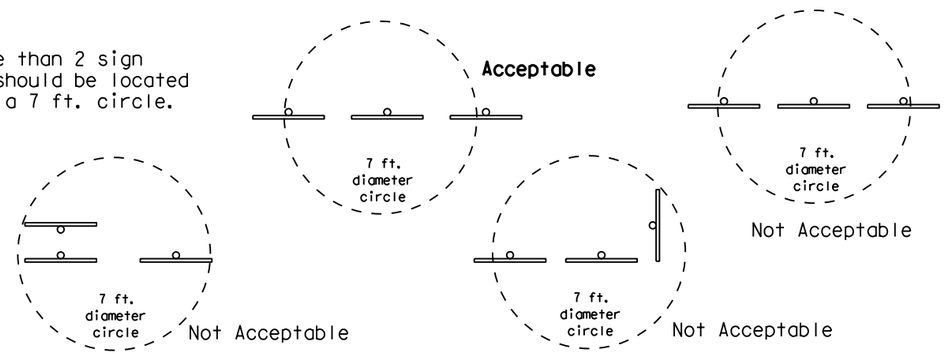

SIGN LOCATION

PAVED SHOULDERS

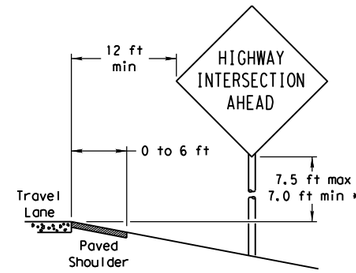

LESS THAN 6 FT. WIDE

When the shoulder is 6 ft. or less in width, the sign must be placed at least 12 ft. from the edge of the travel lane.

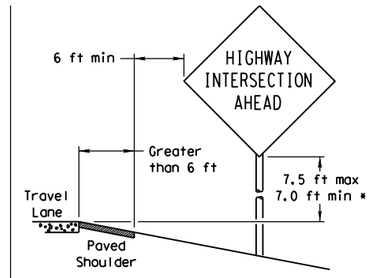

GREATER THAN 6 FT. WIDE

When the shoulder is greater than 6 ft in width, the sign must be placed at least 6 ft. from the edge of the shoulder.

T-INTERSECTION

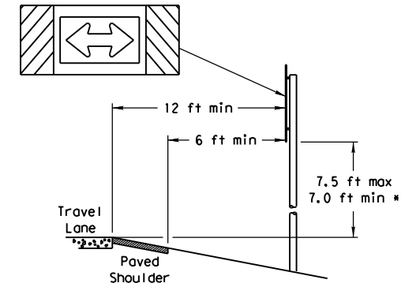

When this sign is needed at the end of a two-lane, two way roadway, the right edge of the sign should be in line with the centerline of the roadway. Place as close to ROW as practical.

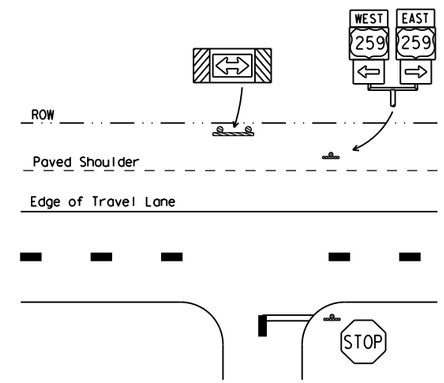

BEHIND BARRIER

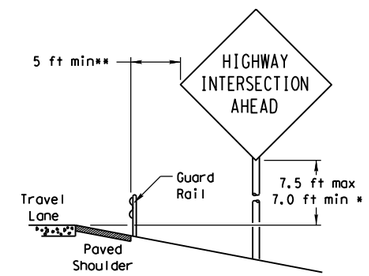

BEHIND GUARDRAIL

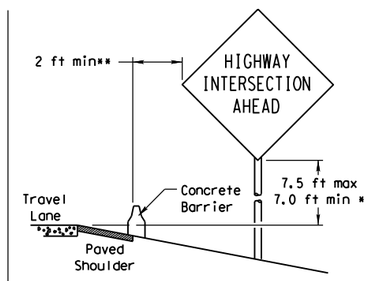

BEHIND CONCRETE BARRIER

**Sign clearance based on distance required for proper guard rail or concrete barrier performance.

* Signs shall be mounted using the following condition that results in the greatest sign elevation:

(1) a minimum of 7 to a maximum of 7.5 feet above the edge of the travel lane or

(2) a minimum of 7 to a maximum of 7.5 feet above the grade at the base of the support when sign is installed on the backslope.

The maximum values may be increased when directed by the Engineer.

See the Traffic Operations Division website for detailed drawings of sign clamps, Triangular Slipbase System components and Wedge Anchor System components.

The website address is:
http://www.txdot.gov/publications/traffic.htm

TYPICAL SIGN ATTACHMENT DETAIL

Single Signs

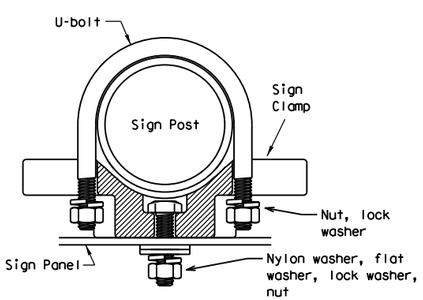

Bolts used to mount sign panels to the clamp are 5/16-18 UNC galvanized square head with nut, nylon washer, flat washer and lock washer. The bolt length is 1 inch for aluminum.

When two sign clamps are used to mount signs back-to-back, use a 5/16-18 UNC galvanized hex head per ASTM A307 with nut and helical-spring lock washer. The approximate bolt lengths for various post sizes and sign clamp types are given in the table at right. The bolt length may need to be adjusted depending upon field conditions.

Sign clamps may be either the specific size clamp or the universal clamp.

Back-to-Back Signs

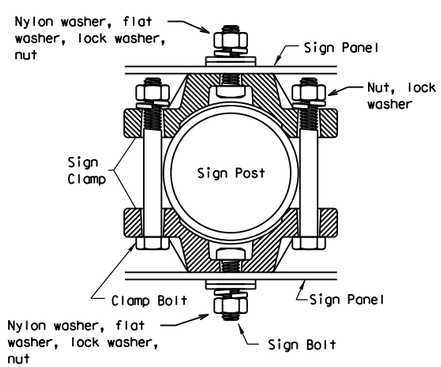

Pipe Diameter	Approximate Bolt Length	
	Specific Clamp	Universal Clamp
2" nominal	3"	3 or 3 1/2"
2 1/2" nominal	3 or 3 1/2"	3 1/2 or 4"
3" nominal	3 1/2 or 4"	4 1/2"

SIGNS WITH PLAQUES

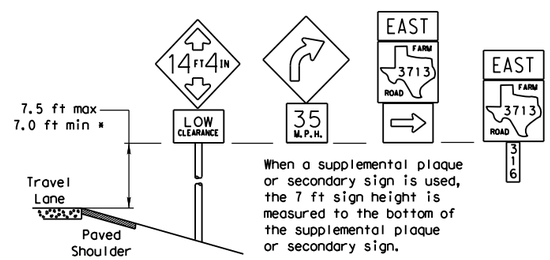

When a supplemental plaque or secondary sign is used, the 7 ft sign height is measured to the bottom of the supplemental plaque or secondary sign.

CURB & GUTTER OR RAISED ISLAND

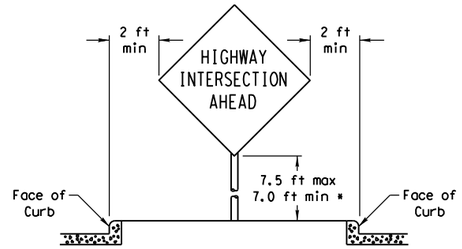

RESTRICTED RIGHT-OF-WAY

(When 6 ft min. is not possible.)

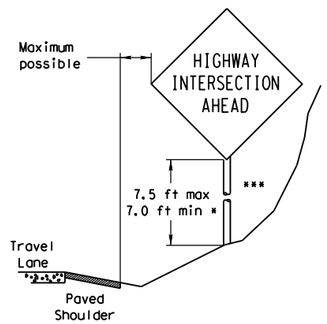

Right-of-way restrictions may be created by rocks, water, vegetation, forest, buildings, a narrow island, or other factors.

In situations where a lateral restriction prevents the minimum horizontal clearance from the edge of the travel lane, signs should be placed as far from the travel lane as practical.

*** Post may be shorter if protected by guardrail or if Engineer determines the post could not be hit due to extreme slope.

Texas Department of Transportation
Traffic Operations Division

SIGN MOUNTING DETAILS SMALL ROADSIDE SIGNS GENERAL NOTES & DETAILS

SMD(GEN)-08

©TxDOT July 2002

DN: TXDOT	CK: TXDOT	DW: TXDOT	CK: TXDOT
CONT	SECT	JOB	HIGHWAY
DIST	COUNTY		SHEET NO.

9-08 REVISIONS

DATE:
FILE:

DISCLAIMER: The use of this standard is governed by the "Texas Engineering Practice Act". No warranty of any kind is made by TxDOT for any purpose whatsoever. TxDOT assumes no responsibility for the conversion of this standard to other formats or for incorrect results or damages resulting from its use.

Wedge Anchor Steel System

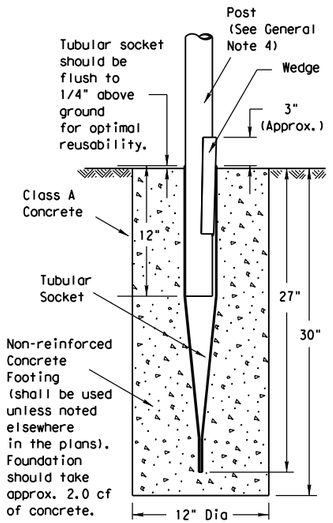

SM RD SGN ASSM TY TWT(X)WS(X)

Wedge Anchor High Density Polyethylene (HDPE) System

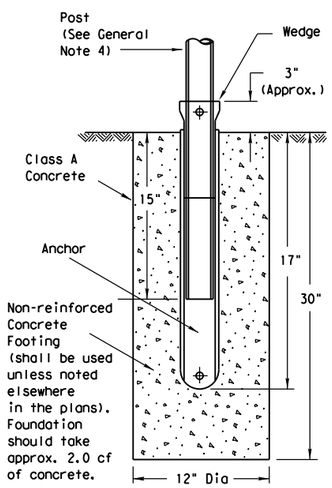

SMD RD SGN ASSM TY TWT(X)WP(X)

Universal Anchor System with Thin-Walled Tubing Post

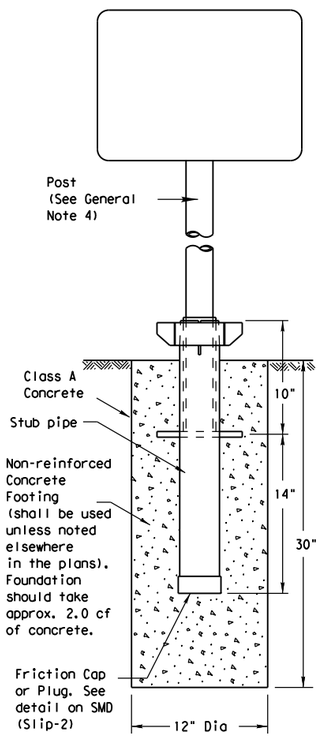

SM RD SGN ASSM TY TWT(X)UA(P)

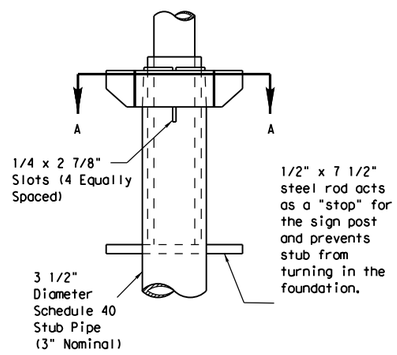

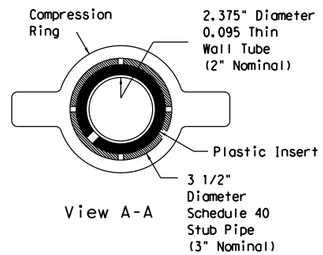

View A-A

Plastic insert must be used when using the TWT with either the Universal Anchor System or the Bolt Down Universal Anchor System. The insert should be approx. 10" long and cover the tubing from just above the top of the stub pipe to the bottom of the sign post when using the Universal Anchor System. The insert should be cut to approx. 4 1/2" when used with the Bolt Down Universal Anchor System.

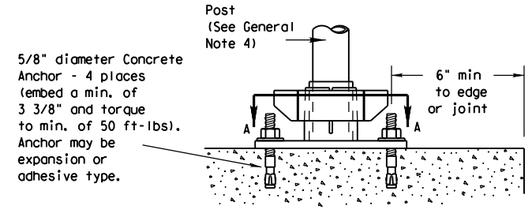

Concrete anchor consists of 5/8" diameter stud bolt with UNC series bolt threads on the upper end. A heavy hex nut per ASTM A563 and hardened washer per ASTM F436. The stud bolt shall have minimum yield and ultimate tensile strengths of 50 and 75 ksi, respectively. Nuts, bolts and washers shall be galvanized per Item 445, "Galvanizing." Top of bolt shall extend at least flush with top of nut when installed. The anchor, when installed in 4000 psi normal-weight concrete with a 3 3/8" minimum embedment, shall have a minimum allowable tension and shear of 2450 and 1525 psi, respectively. Adhesive type anchors shall have stud bolts installed with Type III epoxy per DMS-6100, "Epoxies and Adhesives." Adhesive anchors may be loaded after adequate epoxy cure time per the manufacturer's recommendations.

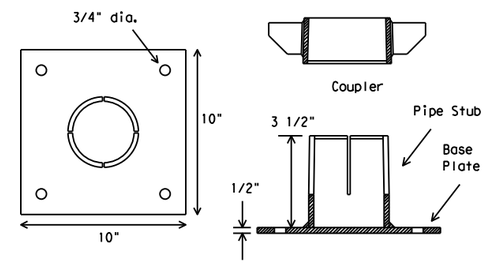

SM RD SGN ASSM TY TWT(X)UB(P)

Sign Installation Using a Prefabricated T-Bracket for Thin-Wall Tubing Post

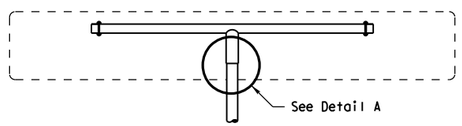

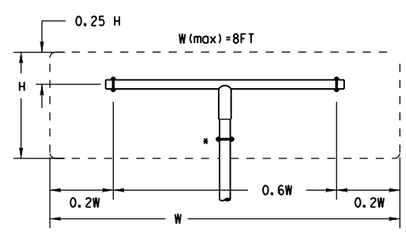

SM RD SGN ASSM TY TWT(X)XX(T)

(* - See General Note 6)

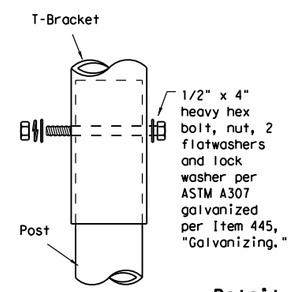

9/16" hole may need to be drilled through post to accommodate bolt.

Detail A

NOTE

The devices shall be installed per manufacturer's recommendations.
Installation procedures shall be provided to the Engineer by Contractor.

GENERAL NOTES:

1. The Wedge Anchor System and the Universal Anchor System with thin wall tubing post may be used to support up to 10 square feet of sign area.
2. The tubular socket, wedge and prefabricated T-bracket shall be permanently marked to indicate manufacturer. Method, design, and location of marking are subject to the approval of the TxDOT Traffic Standards Engineer.
3. Except for posts (13 BWG Tubing), clamps, nuts and bolts, all components shall be prequalified. A list of prequalified vendors may be obtained from the Material Producer List web page. The website address is: http://www.txdot.gov/business/producer list.htm
4. Material used as post with this system shall conform to the following specifications:
   13 BWG Tubing (2.375" outside diameter) (TWT)
   - 0.095" nominal wall thickness
   - Seamless or electric-resistance welded steel tubing
   - Steel shall be HSLAS Gr 55 per ASTM A1011 or ASTM A1008
   - Other steels may be used if they meet the following:
     - 55,000 PSI minimum yield strength
     - 70,000 PSI minimum tensile strength
     - 18% minimum elongation in 2"
   - Wall thickness (uncoated) shall be within the range of .083" to .099"
   - Outside diameter (uncoated) shall be within the range of 2.369" to 2.381"
   - Galvanization per ASTM 123 or ASTM A653 G210. For precoated steel tubing (ASTM A653), recoat tube outside diameter weld seam by metallizing with zinc wire per ASTM B833.
5. Sign blanks shall be the sizes and shapes shown on the plans.
6. Additional sign clamp required on the "T-bracket" post for 24" high signs. Place clamp at least 3" above bottom of sign when possible.
7. Sign supports shall not be spliced except where shown. Sign support posts shall not be spliced.
8. See the Traffic Operations Division website for detailed drawings of sign clamps and Wedge Anchor System components. The website address is: http://www.txdot.gov/publications/traffic.htm

WEDGE ANCHOR SYSTEM INSTALLATION PROCEDURE

1. Dig foundation hole. Where solid rock is encountered at ground level, the foundation shall be a minimum depth of 18". When solid rock is encountered below ground level, the foundation shall extend in the solid rock a minimum depth of 18" or provide a minimum foundation depth of 30". If solid rock is encountered, the socket/stub may be reduced in length as required to a minimum length of 18". Any material removed from the socket/stub shall be from the bottom and the clearance requirements given on SMD(GEN) must be followed. The inner surfaces of the socket/stub must remain free of concrete or other debris.
2. The Engineer may permit batches of concrete less than 2 cubic yards to be mixed with a portable, motor driven concrete mixer. For small placements less than 0.5 cubic yards, hand mixing in a suitable container may be allowed by Engineer. Place concrete into hole until it is approximately flush with the ground. Concrete shall be Class A.
3. Insert tubular socket into concrete until top of socket is approximately 1/4 " above the concrete footing.
4. Plumb the socket. Allow a minimum 4 days for concrete to set, unless otherwise directed by Engineer..
5. Attach the sign to the sign post.
6. Insert the sign post into socket and align sign face with roadway.
7. Drive the wedge into the socket to secure post. This will leave approximately 3 inches of the wedge exposed.

UNIVERSAL ANCHOR SYSTEM INSTALLATION PROCEDURE

1. Dig foundation hole. Where solid rock is encountered at ground level, the foundation shall be a minimum depth of 18". When solid rock is encountered below ground level, the foundation shall extend in the solid rock a minimum depth of 18" or provide a minimum foundation depth of 30". If solid rock is encountered, the socket/stub may be reduced in length as required to a minimum length of 18". Any material removed from the socket/stub shall be from the bottom and the clearance requirements given on SMD(GEN) must be followed. The inner surfaces of the socket/stub must remain free of concrete or other debris.
2. Insert base post in hole to depths shown and backfill hole with concrete.
3. Level and plumb the base post using a torpedo level and allow concrete adequate time to set. The bottom of the slots provided in the stub pipe shall remain above the top of the concrete foundation.
4. Attach the sign to the sign post.
5. Install plastic insert around bottom of post.
6. Insert sign post into base post. Lower until the post comes to rest on steel rod.
7. Seat compression ring using a hammer. Typically, the top of compression ring will be approximately level with top of stub post when optimally installed.
8. Check sign post by hand to ensure it is unable to turn. If loose, increase the tightening of the compression ring.

Texas Department of Transportation
Traffic Operations Division

SIGN MOUNTING DETAILS SMALL ROADSIDE SIGNS WEDGE & UNIVERSAL ANCHOR WITH THIN WALL TUBING POST

SMD(TWT)-08

©TxDOT July 2002

DN: TXDOT	CK: TXDOT	DW: TXDOT	CK: TXDOT
CONT	SECT	JOB	HIGHWAY
DIST	COUNTY		SHEET NO.

9-08 REVISIONS

26E

DATE:
FILE:

DISCLAIMER:
The use of this standard is governed by the "Texas Engineering Practice Act". No warranty of any kind is made by TxDOT for any purpose whatsoever. TxDOT assumes no responsibility for the conversion of this standard to other formats or for incorrect results or damages resulting from its use.

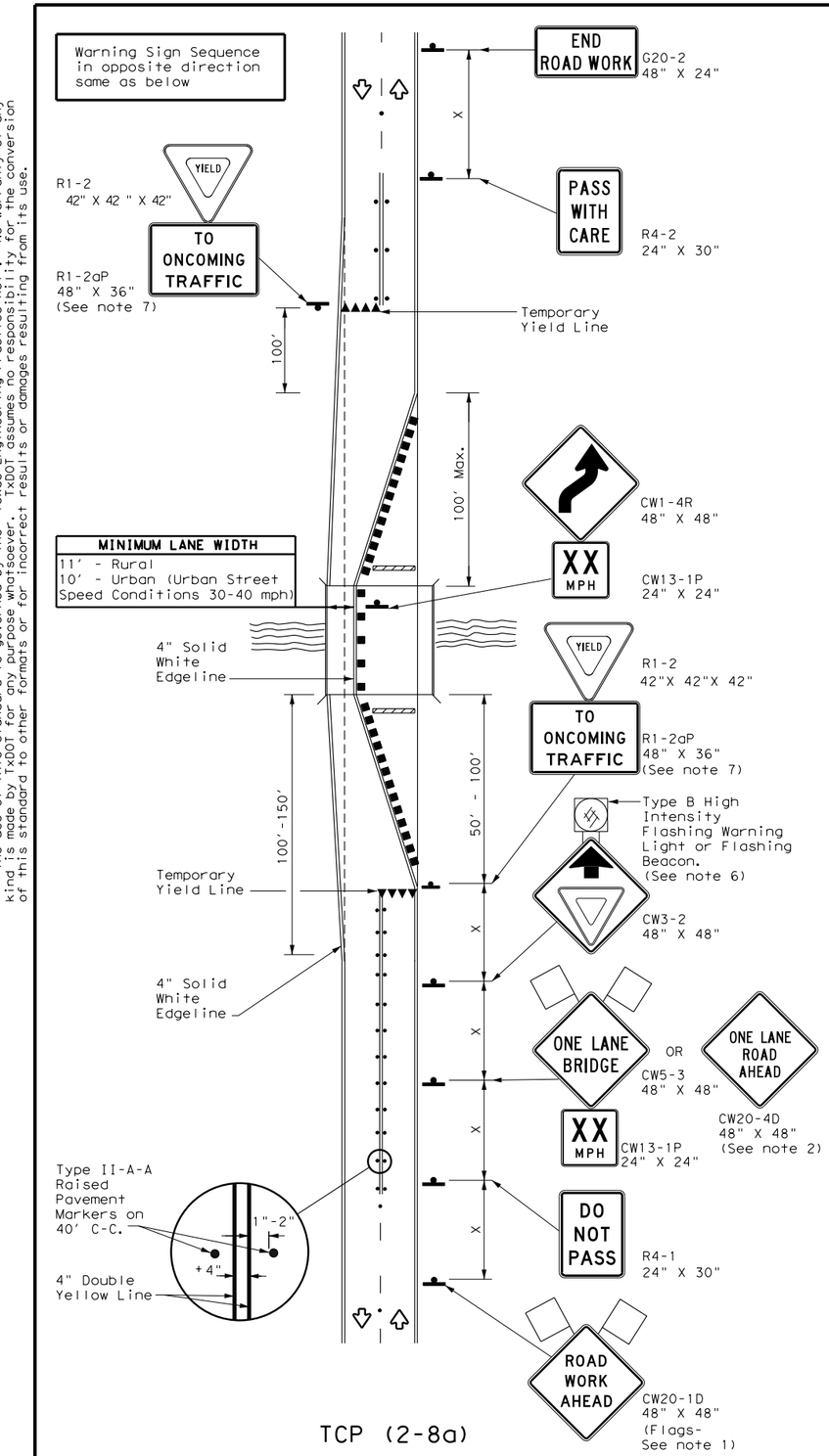

TCP (2-8a)

ONE LANE TWO-WAY
TRAFFIC CONTROL WITH YIELD SIGNS
(Less Than 2000 ADT-See Note 5)

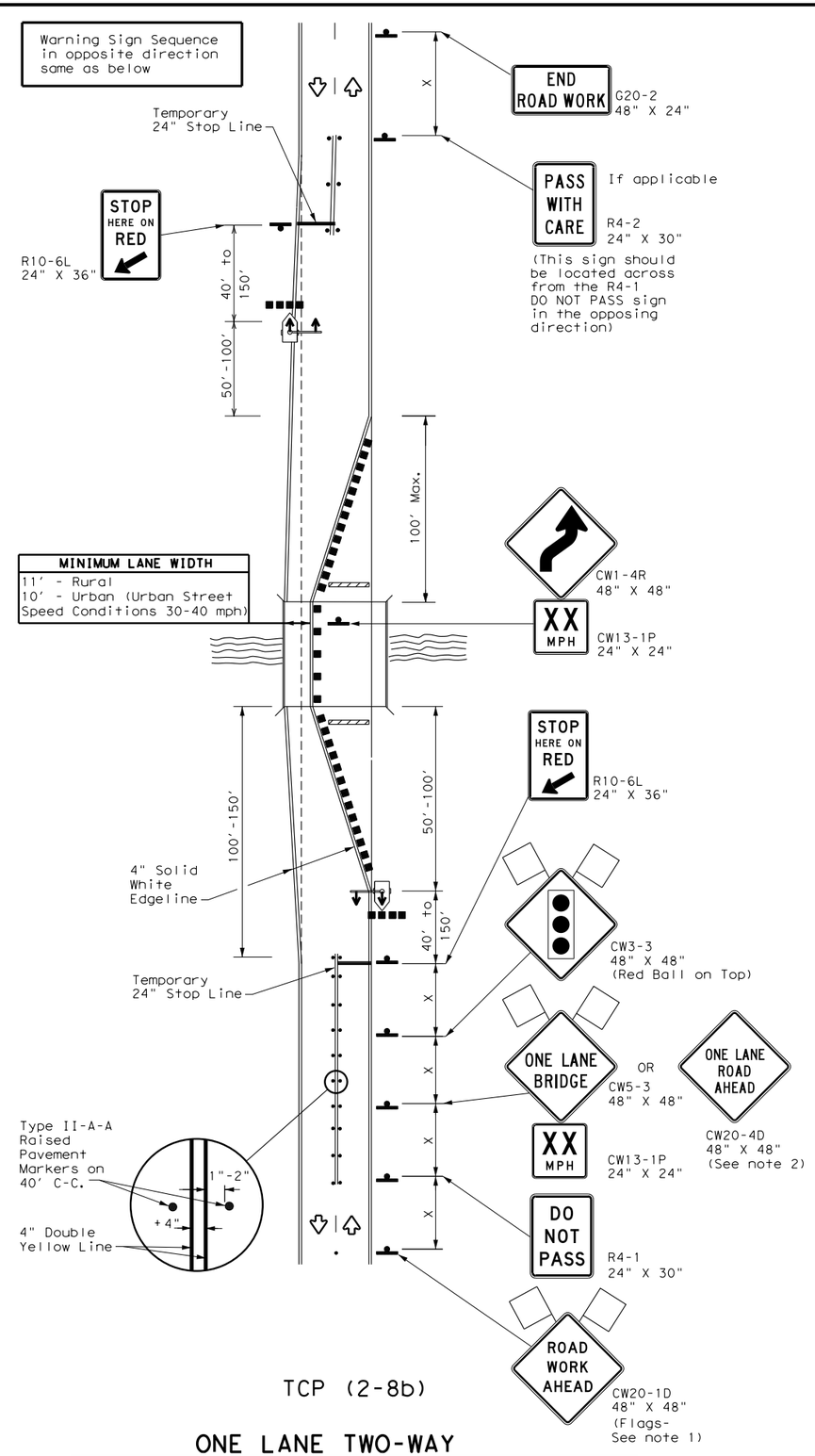

TCP (2-8b)

ONE LANE TWO-WAY
TRAFFIC CONTROL WITH TRAFFIC SIGNAL

LEGEND

	Type 3 Barricade		Channelizing Devices
	Sign		Traffic Flow
	Flag		Flagger
	Raised Pavement Markers Ty II-AA		Temporary or Portable Traffic Signal

Posted Speed ✳	Formula	Minimum Desirable Taper Lengths ✳✳ 10' Offset	11' Offset	12' Offset	Suggested Maximum Spacing of Channelizing Devices On a Taper	On a Tangent	Minimum Sign Spacing "X" Distance	Suggested Longitudinal Buffer Space "B"	Stopping Sight Distance
30	$L = \frac{WS^2}{60}$	150'	165'	180'	30'	60'	120'	90'	200'
35		205'	225'	245'	35'	70'	160'	120'	250'
40		265'	295'	320'	40'	80'	240'	155'	305'
45	L = WS	450'	495'	540'	45'	90'	320'	195'	360'
50		500'	550'	600'	50'	100'	400'	240'	425'
55		550'	605'	660'	55'	110'	500'	295'	495'
60		600'	660'	720'	60'	120'	600'	350'	570'
65		650'	715'	780'	65'	130'	700'	410'	645'
70		700'	770'	840'	70'	140'	800'	475'	730'
75		750'	825'	900'	75'	150'	900'	540'	820'

✳ Conventional Roads Only
✳✳ Taper lengths have been rounded off.
L=Length of Taper(FT) W=Width of Offset(FT) S=Posted Speed(MPH)

TYPICAL USAGE

MOBILE	SHORT DURATION	SHORT TERM STATIONARY	INTERMEDIATE TERM STATIONARY	LONG TERM STATIONARY
			✓	✓

GENERAL NOTES

1. Flags attached to signs where shown are REQUIRED.
2. When this TCP is used at a location which does not involve a bridge, a 48" x 48" CW20-4D "ONE LANE ROAD AHEAD" signs should be used in lieu of the CW5-3 "ONE LANE BRIDGE" signs. The CW13-1P Advisory Speed Plaque is required with either warning sign.
3. Raised pavement markers shall be placed 40 feet c-c on centerline between DO NOT PASS signs and stop or yield lines.
4. For intermediate term situations, when it is not feasible to remove and restore pavement markings, the channelization must be made dominant by using a very close spacing. This is especially important in locations of conflicting information, such as where traffic is directed over a double yellow centerline. In such locations a maximum channelizing device spacing of 20 feet is recommended. The 20 foot channelizing device spacing recommendation is intended for the area of conflicting information and not the entire work zone.

TCP (2-8a)

5. Traffic control by CW3-2 "YIELD AHEAD" symbol signs for one lane two-way traffic control operations should be limited to work spaces less than 400 feet long and roadways with less than 2000 ADT. Otherwise, portable traffic signals should be used.
6. If power is available, a flashing beacon should be attached to the CW3-2 "YIELD AHEAD" symbol sign for emphasis.
7. The R1-2 "YIELD" and R1-2aP "TO ONCOMING TRAFFIC" signs and other regulatory signs shall be installed at 7 foot minimum mounting height.

TCP (2-8b)

8. A list of approved Portable Traffic Signals can be found in the "Compliant Work Zone Traffic Control Devices" list.
9. Portable traffic signals should be located to provide adequate stopping sight distance for approaching motorist (See table above).

Texas Department of Transportation — Traffic Operations Division Standard

TRAFFIC CONTROL PLAN LONG TERM ONE-LANE TWO-WAY CONTROL

TCP(2-8)-18

FILE: tcp2-8-18.dgn	DN:	CK:	DW:	CK:
© TxDOT December 1985	CONT	SECT	JOB	HIGHWAY
REVISIONS 8-95 3-03 1-97 2-12 4-98 2-18	DIST		COUNTY	SHEET NO.

168

DATE:
FILE:

DISCLAIMER:
The use of this standard is governed by the "Texas Engineering Practice Act". No warranty of any kind is made by TxDOT for any purpose whatsoever. TxDOT assumes no responsibility for the conversion of this standard to other formats or for incorrect results or damages resulting from its use.

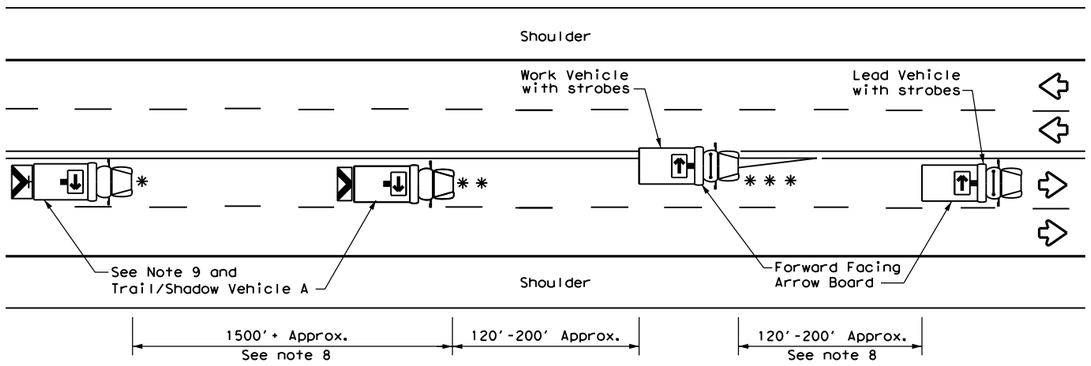

TCP (3-1a)

UNDIVIDED MULTILANE ROADWAY

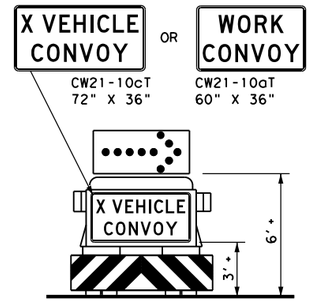

TRAIL/SHADOW VEHICLE A

with RIGHT Directional display Flashing Arrow Board

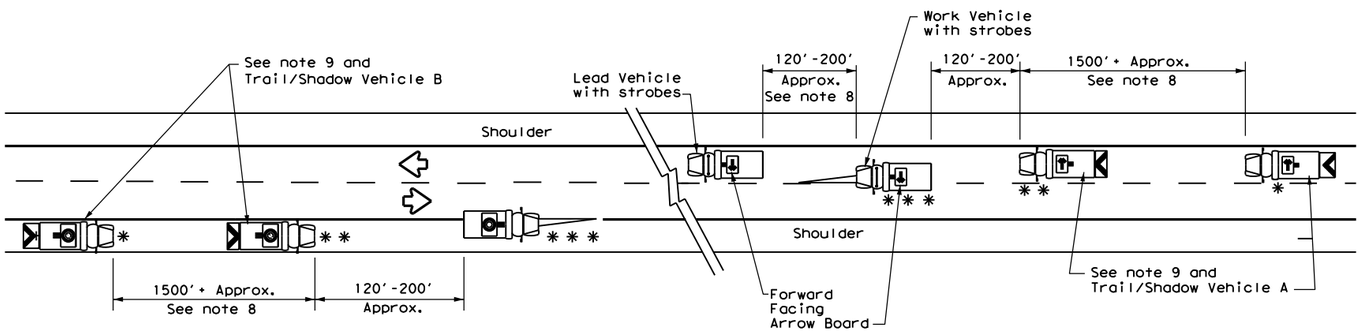

WORK ON SHOULDER

WORK ON TRAVEL LANE

TCP (3-1b)

TWO-WAY ROADWAY WITH PAVED SHOULDERS

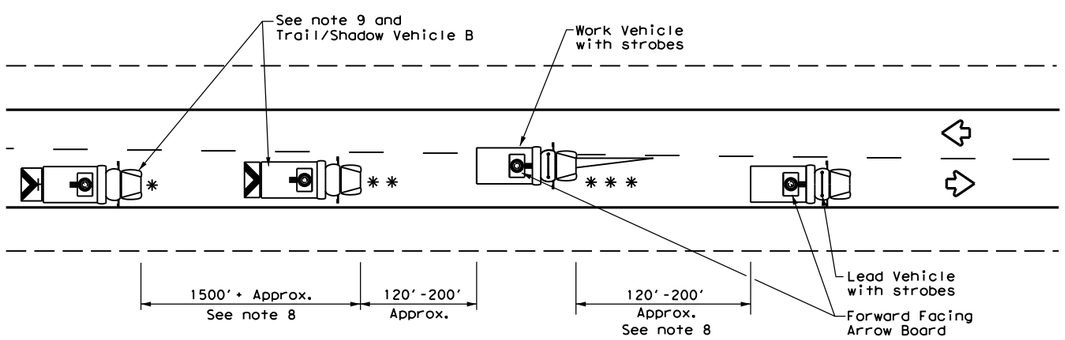

TCP (3-1c)

TWO-WAY ROADWAY WITHOUT PAVED SHOULDERS

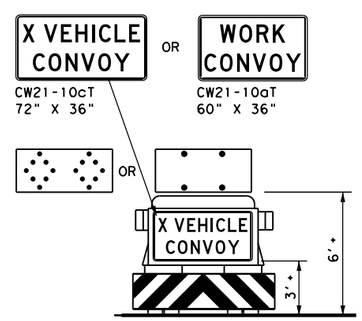

TRAIL/SHADOW VEHICLE B

with Flashing Arrow Board in CAUTION display

LEGEND

*	Trail Vehicle	ARROW BOARD DISPLAY	
* *	Shadow Vehicle		
* * *	Work Vehicle		RIGHT Directional
	Heavy Work Vehicle		LEFT Directional
	Truck Mounted Attenuator (TMA)		Double Arrow
	Traffic Flow		CAUTION (Alternating Diamond or 4 Corner Flash)

TYPICAL USAGE				
MOBILE	SHORT DURATION	SHORT TERM STATIONARY	INTERMEDIATE TERM STATIONARY	LONG TERM STATIONARY
✓				

GENERAL NOTES

1. TRAIL, SHADOW, and LEAD vehicles shall be equipped with arrow boards as illustrated. When a LEAD vehicle is not used the WORK vehicle must be equipped with an arrow board. The Engineer will determine if the LEAD VEHICLE and/or TRAIL VEHICLE are required based on prevailing roadway conditions, traffic volume, and sight distance restrictions.
2. The use of amber high intensity rotating, flashing, oscillating, or strobe lights on vehicles are required. Blue high intensity rotating, flashing, oscillating or strobe lights when mounted on the driver's side of the vehicle may be operated simultaneously with the amber beacons or strobe lights.
3. The use of truck mounted attenuators (TMA) on the SHADOW VEHICLE and TRAIL VEHICLE are required.
4. Reflective sheeting on the rear of the TMA shall meet or exceed the reflectivity and color requirements of DEPARTMENTAL MATERIAL SPECIFICATION DMS 8300, Type A.
5. Flashing arrow boards shall be Type B or Type C as per the Barricade and Construction (BC) standards. The board shall be controlled from inside the vehicle.
6. Each vehicle shall have two-way radio communication capability.
7. When work convoys must change lanes, the TRAIL VEHICLE should change lanes first to shadow the other convoy vehicles.
8. Vehicle spacing between the TRAIL VEHICLE and the SHADOW VEHICLE will vary depending on sight distance restrictions. Motorists approaching the work convoy should be able to see the TRAIL VEHICLE in time to slow down and/or change lanes as they approach the TRAIL VEHICLE. Vehicle spacing between the WORK VEHICLE and SHADOW VEHICLE and vehicle spacing between WORK VEHICLE and LEAD VEHICLE may vary according to terrain, work activity and other factors.
9. "X VEHICLE CONVOY" (CW21-10cT) or "WORK CONVOY" (CW21-10aT) signs shall be used on TRAIL VEHICLES and SHADOW VEHICLES as shown. As an option 48" X 48" diamond shaped "WORK CONVOY"(CW21-10T) or "X VEHICLE CONVOY" (CW21-10bT) signs may be used where adequate mounting space exists. When used, the X VEHICLE CONVOY sign shall have the number of the convoy vehicles displayed on the sign in the number designation "X" location. The "X VEHICLE CONVOY" sign shall not be used on the SHADOW VEHICLE if a TRAIL VEHICLE is used.
10. On two-lane two-way roadways, the work and protection vehicles should pull over periodically to allow motor vehicle traffic to pass. If motorists are not allowed to pass the work convoy, a "DO NOT PASS" (R4-1) sign should be placed on the back of the rearmost protection vehicle.

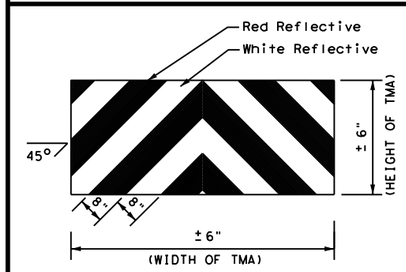

STRIPING FOR TMA

Texas Department of Transportation — Traffic Operations Division Standard

TRAFFIC CONTROL PLAN MOBILE OPERATIONS UNDIVIDED HIGHWAYS

TCP(3-1)-13

FILE: tcp3-1.dgn	DN: TxDOT	CK: TxDOT	DW: TxDOT	CK: TxDOT
©TxDOT December 1985	CONT	SECT	JOB	HIGHWAY
REVISIONS 2-94 4-98 8-95 7-13 1-97	DIST	COUNTY		SHEET NO.

DATE:
FILE:

DISCLAIMER:
The use of this standard is governed by the "Texas Engineering Practice Act". No warranty of any kind is made by TxDOT for any purpose whatsoever. TxDOT assumes no responsibility for the conversion of this standard to other formats or for incorrect results or damages resulting from its use.

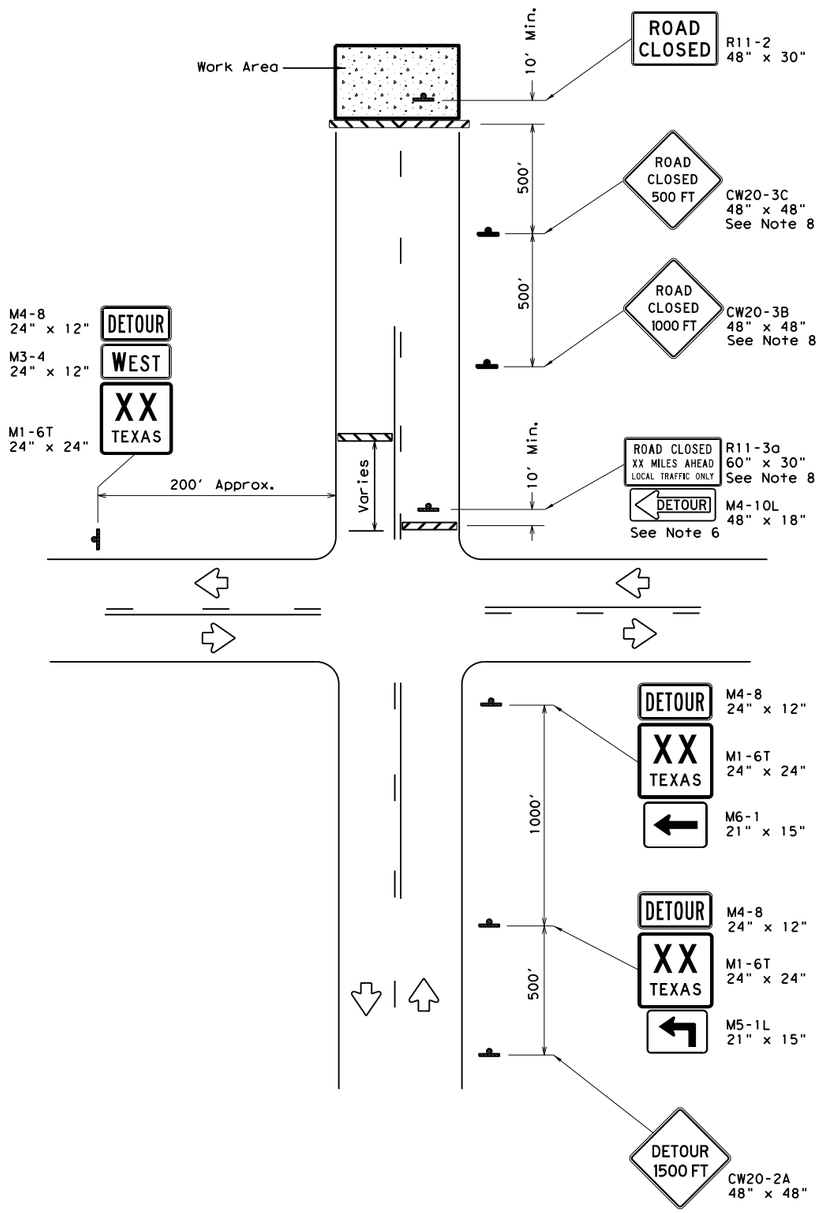

ROAD CLOSURE BEYOND THE INTERSECTION

Signing for a Numbered Route with an Off-Site Detour

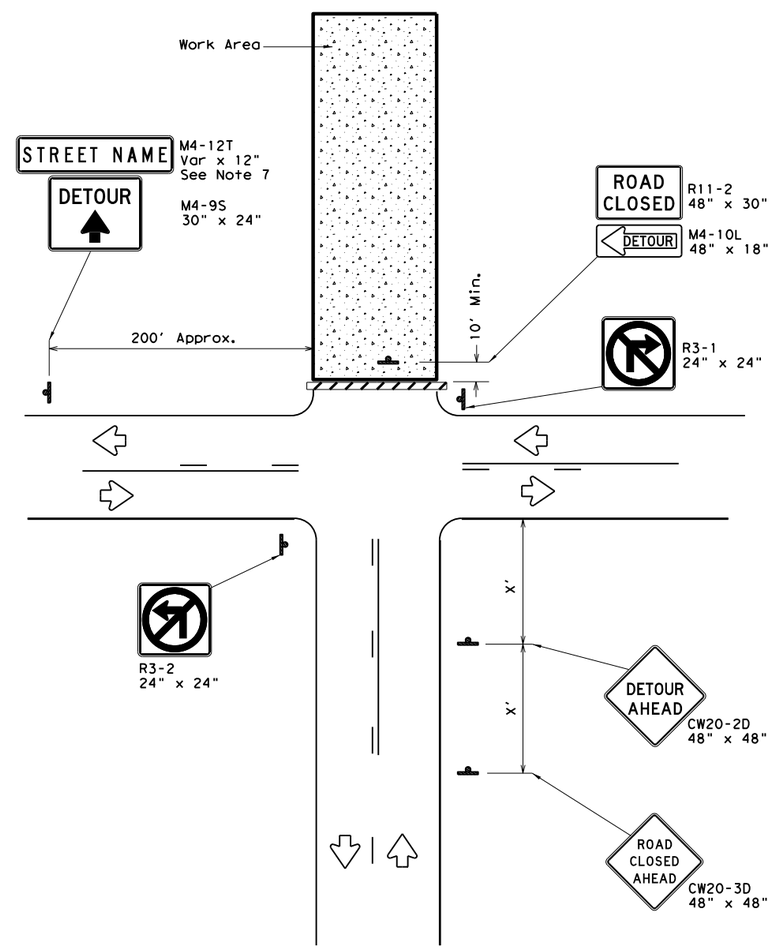

ROAD CLOSURE AT THE INTERSECTION

Signing for an Un-numbered Route with an Off-Site Detour

LEGEND	
	Type 3 Barricade
	Sign

Posted Speed *	Minimum Sign Spacing "X" Distance
30	120'
35	160'
40	240'
45	320'
50	400'
55	500'
60	600'
65	700'
70	800'
75	900'

* Conventional Roads Only

GENERAL NOTES

1. This sheet is intended to provide details for temporary work zone road closures. For permanent road closure details see the D&OM standards.
2. Barricades used shall meet the requirements shown on Barricade and Construction Standard BC(10) and listed on the Compliant Work Zone Traffic Control Devices list (CWZTCD).
3. Stockpiled materials shall not be placed on the traffic side of barricades.
4. Barricades at the road closure should extend from pavement edge to pavement edge.
5. Detour signing shown is intended to illustrate the type of signing that is appropriate for numbered routes or un-numbered routes as labeled. It does not indicate the full extent of detour signing required. Detour routes should be signed as shown elsewhere in the plans.
6. If the road is open for a significant distance beyond the intersection or there are significant origin/destination points beyond the intersection, the signs and barricades at this location should be located at the edge of the traveled way.
7. The Street Name (M4-12T) sign is to be placed above the DETOUR (M4-9S) sign.
8. For urban areas where there is a shorter distance between the intersection and the actual closure location, the ROAD CLOSED XX MILES AHEAD (R11-3a) sign may be replaced with a ROAD CLOSED TO THRU TRAFFIC (R11-4) sign. If adequate space does not exist between the intersection and the closure a single ROAD CLOSED AHEAD (CW20-3D) sign spaced as per the table above may replace the ROAD CLOSED 1000 FT (CW20-3B) and ROAD CLOSED 500 FT (CW20-3C) signs.
9. Signs and barricades shown shall be subsidiary to Item 502. Locations where these details will be required shall be as shown elsewhere in the plans.

Texas Department of Transportation

Traffic Operations Division Standard

WORK ZONE ROAD CLOSURE DETAILS

WZ(RCD)-13

FILE: wzrcd-13.dgn	DN: TxDOT	CK: TxDOT	DW: TxDOT	CK: TxDOT
© TxDOT August 1995	CONT	SECT	JOB	HIGHWAY
REVISIONS				
1-97 4-98 7-13	DIST	COUNTY		SHEET NO.
2-98 3-03				

DATE:
FILE: