AS-BUILT DRAWINGS

CONSTRUCTION DOCUMENTS

FOR

LOT 4 WAL-MART LUCAS

2650 W. LUCAS ROAD

LOT 4, BLOCK A

LUCAS, TEXAS 75002

JANUARY 2021

ISSUE FOR CONSTRUCTION

OWNER:
CA LUCAS LLC
5525 N. MACARTHUR BLVD, STE 400
IRVING, TEXAS 75038
CONTACT: AUSTIN CLINKSCALES
PHONE: (817) 368-9499
E-MAIL: AC@LADERAPROPERTIES.COM

ARCHITECT:
DFS ARCHITECT
10300 N. CENTRAL EXPRESSWAY, STE 450
DALLAS, TEXAS 75231
CONTACT: DONALD F. SOPRANZI,
PHONE: (817) 903-6663
E-MAIL: DONS@DFSARCHITECT.COM

ENGINEER:
KFM ENGINEERING & DESIGN
621 N. MAIN STREET, SUITE 415
GRAPEVINE, TEXAS 76051
CONTACT: DAVID PITCHER, PE
PHONE: (214) 801-4936
E-MAIL: DPITCHER@KFM-LLC.COM
TBPE #: F-20821

LANDSCAPE ARCHITECT:
KFM ENGINEERING & DESIGN, LLC.
621 N. MAIN STREET, SUITE 415
GRAPEVINE, TEXAS 76051
CONTACT: NATHAN R. PARROTT, PLA
PHONE: (817) 416-4536
E-MAIL: NPARROTT@KFM-LLC.COM
TBAE #: 3237

SURVEYOR:
JPH LAND SURVEYING
785 LONESOME DOVE TRAIL
HURST, TEXAS 76054
CONTACT: JEWEL CHADD
PHONE: (817) 431-4971
E-MAIL: JEWEL@JPHLS.COM

QA/QC BY: DATE:

Sheet Number	Sheet Title
C0.00	COVER SHEET
C0.01	SITE PLAN
C0.02	PLAT
C0.03	GENERAL CONSTRUCTION NOTES
C1.00	DEMOLITION PLAN
C2.00	DIMENSIONAL CONTROL PLAN
C2.01	SITE PLAN DETAILS
C3.00	GRADING PLAN
C3.01	EROSION CONTROL PLAN
C3.02	EROSION CONTROL DETAILS
C4.00	DRAINAGE AREA MAP
C5.00	DRAINAGE & UTILITY PLAN
C5.01	UTILITY DETAILS
C6.00	PAVING PLAN
C6.01	PAVING PLAN DETAILS
L1.00	LANDSCAPE PLAN
L1.01	LANDSCAPE NOTES & SPECIFICATIONS
L1.02	LANDSCAPE DETAILS
IR01	IRRIGATION PLAN
IR02	IRRIGATION DETAILS

VICINITY MAP
SCALE: 1" = 2000'

RECORD DRAWING:
THIS DRAWING HAS BEEN REVISED TO SHOW THOSE CHANGES DURING THE CONSTRUCTION PROCESS TO KFM ENGINEERING & DESIGN. THIS DRAWING IS NOT GUARANTEED TO BE "AS-BUILT" BUT IS BASED ON THE INFORMATION MADE AVAILABLE
DATE: 02/04/2021 BY: DAVID M. PITCHER, P.E.

KFM ENGINEERING & DESIGN

TBPE #: F-20821
KFM PROJECT: 010011001

CITY PROJECT NO. -

010011001 - LOT 4 WAL-MART LUCAS - LUCAS, TEXAS 75002 - LOT 4, BLOCK A

K:\Projects\010011001\cadd\sheet\010011001_cv01-DPITCHER-2x\2021 4:53 PM

VICINITY MAP
SCALE: 1" = 2000'

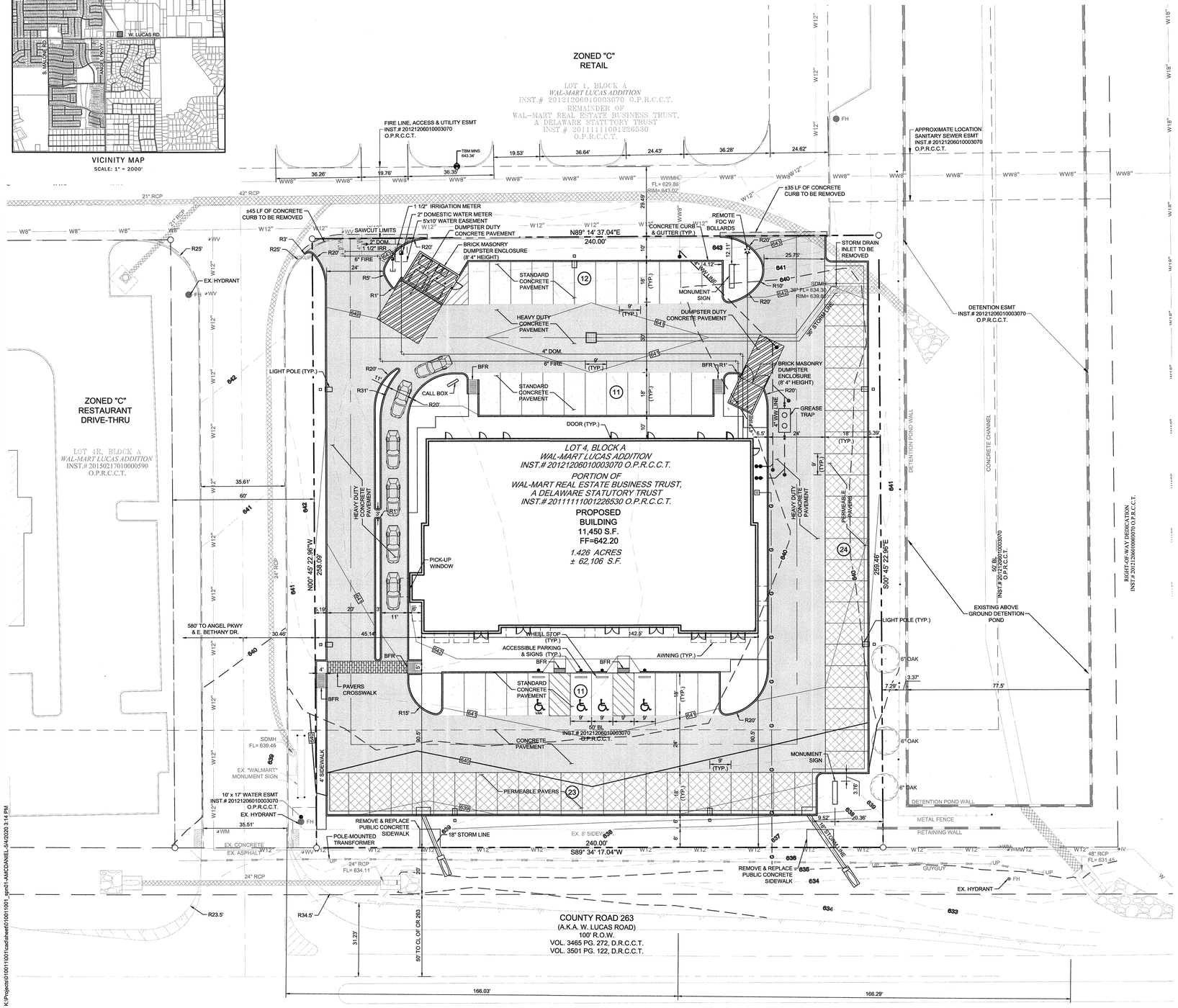

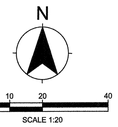

LEGEND

- PERMEABLE PAVERS
- DUMPSTER DUTY PAVEMENT
- STANDARD DUTY PAVEMENT
- HEAVY DUTY PAVEMENT
- T — ELECTRIC TRANSFORMER
- BFR
- VAN — VAN ACCESSIBLE PARKING
- ACCESSIBLE PARKING
- SIGN
- LIGHT

SITE DATA SUMMARY TABLE

SITE AREA:	1.42 AC (62,106 S.F.)
BUILDING AREA:	11,450 S.F.
LOT COVERAGE:	0.18%
BUILDING HEIGHT:	23' - 0" 1-STORY
BUILDING USE:	RESTAURANT, RETAIL & OFFICE
PARKING PROVIDED:	81 SPACES (4 ACCESSIBLE)
PARKING REQ'D:	80 SPACES (4 ACCESSIBLE) RESTAURANT 4,175 SF X 50% = 2,087 SF DINNING AREA 2,087 SF @ 15 SF PER OCCUPANT = 139 OCCUPANTS 139 OCCUPANTS @ 1:3 = 46 SPACES REQUIRED RETAIL 5,091 SF @ 1:200 = 26 SPACES REQUIRED OFFICE 2,118 SF @ 1:300 = 8 SPACES REQUIRED
ZONING:	"C" COMMERCIAL SUP - DRIVE-THRU RESTAURANT ORDINANCE # 2020-04-00909
IMPERVIOUS COVER PERVIOUS:	21,737 S.F. (35%)
IMPERVIOUS:	40,369 S.F. (65%)

DIMENSIONAL CONTROL NOTES

1. **GENERAL CONSTRUCTION NOTES:** REFER TO SHEET C0.03 "GENERAL CONSTRUCTION NOTES" FOR THE GENERAL CONSTRUCTION NOTES FOR THE PROJECT.
2. **SURVEYING:** ALL SURVEYING REQUIRED FOR CONSTRUCTION STAKING SHALL BE THE RESPONSIBILITY OF THE CONTRACTOR. THE DEVELOPER SHALL PROVIDE THE PROPERTY CORNERS AND TWO BENCHMARKS FOR USE AS HORIZONTAL AND VERTICAL DATUM. THE CONTRACTOR SHALL EMPLOY A REGISTERED PROFESSIONAL LAND SURVEYOR TO PERFORM ALL ADDITIONAL SURVEY, LAYOUT AND MEASUREMENT WORK NECESSARY FOR THE COMPLETION OF THE PROJECT.
3. **PROTECTION OF PROPERTY CORNERS AND BENCHMARKS:** THE CONTRACTOR SHALL PROTECT ALL PROPERTY CORNER MARKERS AND BENCHMARKS, AND WHEN ANY SUCH MARKERS OR MONUMENTS ARE IN DANGER OF BEING DISTURBED, THEY SHALL BE PROPERLY REFERENCED AND IF DISTURBED, SHALL BE RESET BY A REGISTERED PUBLIC SURVEYOR AT THE EXPENSE OF THE CONTRACTOR.
4. **DIMENSIONAL CONTROL:** ALL PAVING DIMENSIONS AND COORDINATES SHOWN ARE TO FACE OF CURB WHERE APPLICABLE. ALL DIMENSIONS SHOWN AT FL CURB POINTS ARE AT THE INTERSECTION OF THE FACE OF CURB.
5. **CURB RADII:** ALL CURB RADII SHALL BE 3 FEET TO FACE OF CURB UNLESS OTHERWISE NOTED.
6. **BUILDING DIMENSIONS:** CONTRACTOR SHALL REFER TO BUILDING PLANS FOR ACTUAL BUILDING DIMENSIONS. THE DIMENSIONS AND CORNERS SHOWN ARE TO FACE OF OUTSIDE WALLS OF BUILDING.
7. **TOPOGRAPHIC BOUNDARY SURVEY:** SURVEY INCLUDES PROPERTY LINE, LEGAL DESCRIPTION, EXISTING UTILITIES, SITE TOPOGRAPHY WITH SPOT ELEVATIONS, OUTSTANDING PHYSICAL FEATURES AND EXISTING STRUCTURE LOCATIONS WAS PROVIDED BY:
   JPH LAND SURVEYING
   785 LONESOME DOVE TRAIL
   HURST, TEXAS 76054
   CONTACT: JEWEL CHADD
   PHONE: (817) 431-4971
   EMAIL: JEWEL@JPHLS.COM
8. **HANDICAP PARKING:** HANDICAPPED PARKING AREAS SHALL BE CONSTRUCTED PER CITY STANDARDS AND SHALL COMPLY WITH REQUIREMENTS OF THE CURRENT, ADOPTED INTERNATIONAL BUILDING CODE.
9. **FIRE LANE:** FIRE LANES SHALL BE CONSTRUCTED AND MARKED PER CITY STANDARDS REFERENCE PAVING PLAN FOR DETAILS.
10. **SIGNS:** CONTRACTOR TO PROVIDE HANDICAPPED PARKING SIGNS AND POLES.

KFM ENGINEERING & DESIGN

OWNER:
CA LUCAS LLC
5525 N. MACARTHUR BLVD, STE 400
IRVING, TEXAS 75038
CONTACT: AUSTIN CLINKSCALES
PHONE: (817) 368-9499

ENGINEER:
KFM ENGINEERING & DESIGN
621 N. MAIN STREET, SUITE 415
GRAPEVINE, TEXAS 76051
CONTACT: CHARLES E. FOWLER
PHONE: (817) 416-4KFM

SURVEYOR:
JPH LAND SURVEYING
785 LONESOME DOVE TRAIL
HURST, TEXAS 76054
CONTACT: JEWEL CHADD
PHONE: (817) 431-4971

SUBMITTAL LOG

INITIAL SUBMITTAL	5/1/2020
RESUBMITTAL	5/1/2020

SITE PLAN

LOT 4 WAL-MART LUCAS
1.42 ACRES
LOT 4, BLOCK A, WAL-MART LUCAS ADDITION
CITY OF LUCAS
COLLIN COUNTY, TEXAS
CITY PROJECT NO. ____-____

K:\Projects\01001100\1cad\sheet\01001101_pgn01-ANCDANIEL--5/4/2020 3:14 PM

10306

20121206010003070 12/06/2012 01:52:35 PM PL 1/1

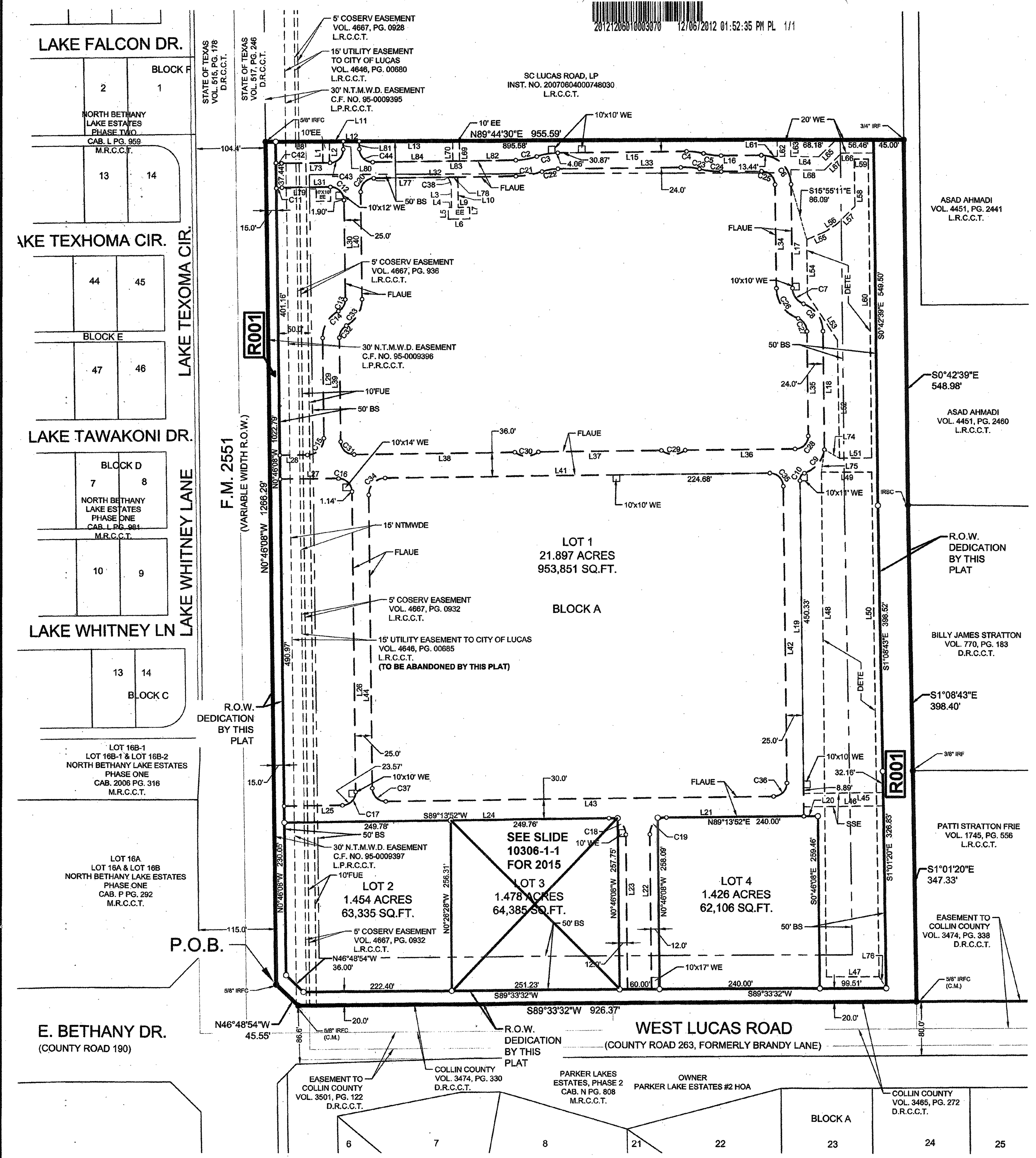

LINE TABLE			LINE TABLE		
NO.	BEARING	LENGTH	NO.	BEARING	LENGTH
L1	N00°15'30"W	32.35'	L46	N89°01'49"E	119.30'
L2	N00°15'30"W	32.26'	L47	S89°35'30"W	78.95'
L3	S00°45'53"E	31.16'	L48	N00°39'11"W	758.58'
L4	S89°15'58"W	5.00'	L49	N89°42'22"E	75.20'
L5	S00°46'08"E	17.57'	L50	S00°56'11"E	758.46'
L6	N89°13'52"E	32.20'	L51	S89°17'46"W	48.01'
L7	N00°46'08"W	17.55'	L52	N01°04'01"W	177.32'
L8	S89°42'37"W	70.53'	L53	N33°17'29"W	81.84'
L9	S89°15'58"W	17.20'	L54	N00°46'08"W	82.73'
L10	N00°46'08"W	45.14'	L55	N66°11'44"E	30.66'
L11	N89°50'55"E	20.72'	L56	N56°29'52"E	19.79'
L12	N89°44'30"E	24.00'	L57	N45°15'49"E	38.62'
L13	N89°45'35"E	140.11'	L58	S00°40'21"E	70.55'
L14	N89°13'52"E	72.81'	L59	N89°19'38"E	20.90'
L15	N89°13'56"E	192.83'	L60	S00°40'22"E	449.13'
L16	N89°18'53"E	60.28'	L61	N90°00'00"W	10.70'
L17	S00°46'08"E	156.39'	L62	S00°46'08"E	25.17'
L18	S00°46'08"E	177.58'	L63	S00°46'08"E	25.43'
L19	S00°46'16"E	453.83'	L64	N90°00'00"W	42.10'
L20	S89°13'52"W	21.01'	L65	S45°00'00"W	36.40'
L21	S89°13'52"W	206.00'	L66	S89°44'30"W	48.39'
L22	S00°46'13"E	233.02'	L67	S45°00'00"W	36.45'
L23	N00°46'13"W	232.82'	L68	N90°00'00"W	50.12'
L24	S89°13'52"W	486.54'	L69	S00°45'53"E	30.53'
L25	S89°13'52"W	87.54'	L70	S00°45'53"E	30.53'
L26	S00°46'08"E	450.62'	L73	N89°13'52"E	72.81'
L27	N89°27'56"E	87.63'	L74	S59°45'18"E	26.16'
L28	S89°27'56"W	41.48'	L75	N07°20'35"E	34.57'
L29	S00°46'08"E	149.89'	L76	S32°41'48"E	20.05'
L30	S00°46'08"E	149.67'	L77	N89°13'52"E	110.44'
L31	N89°13'52"E	72.79'	L78	N89°13'52"E	15.69'
L32	N89°13'52"E	212.98'	L79	N89°13'46"E	51.29'
L33	N89°13'56"E	183.84'	L80	S00°46'08"E	12.03'
L34	S00°46'08"E	156.39'	L81	S00°46'08"E	11.82'
L35	S00°46'08"E	156.45'	L82	N89°13'52"E	83.87'
L36	S89°13'52"W	164.62'	L83	N89°13'52"E	213.98'
L37	S89°13'52"W	184.29'	L84	N89°13'52"E	120.10'
L38	S89°13'53"W	240.67'			
L39	N00°46'08"W	155.31'			
L40	N00°46'08"W	161.67'			
L41	N89°13'52"E	576.00'			
L42	S00°46'08"E	445.33'			
L43	S89°13'52"W	581.00'			
L44	N00°46'08"W	440.33'			
L45	N89°01'49"E	119.21'			

CURVE TABLE					
NO.	DELTA	RADIUS	LENGTH	CHORD BEARING	CHORD
C1	9°42'52"	50.00'	8.48'	S85°54'42"E	8.47'
C2	18°22'05"	100.00'	32.06'	N80°02'50"E	31.92'
C3	18°22'05"	100.00'	32.06'	S80°02'50"W	31.92'
C4	14°43'24"	100.00'	25.70'	N82°55'35"W	25.63'
C5	15°12'15"	100.00'	26.54'	S83°10'00"E	26.46'
C6	89°54'59"	44.00'	69.05'	N45°43'37"W	62.18'
C7	69°38'44"	25.00'	30.39'	S35°35'29"E	28.55'
C8	69°38'44"	44.00'	53.48'	N35°35'30"W	50.25'
C9	62°34'50"	45.00'	49.15'	N39°54'12"E	46.74'
C10	71°57'52"	10.00'	12.56'	S35°12'41"W	11.75'
C11	9°44'14"	50.00'	8.50'	S84°21'45"W	8.49'
C12	90°00'00"	20.00'	31.42'	N45°46'08"W	28.28'
C13	62°11'07"	20.00'	21.71'	N30°19'26"E	20.66'
C14	62°11'07"	45.00'	48.84'	S30°19'26"W	46.48'
C15	90°14'04"	25.00'	39.37'	N44°20'54"E	35.43'
C16	89°45'56"	20.00'	31.33'	N45°39'06"W	28.23'
C17	90°00'00"	20.00'	31.42'	N44°13'52"E	28.28'
C18	89°59'55"	25.00'	39.27'	N45°46'10"W	35.35'
C19	90°00'05"	25.00'	39.27'	S44°13'50"W	35.36'
C20	90°00'00"	20.00'	31.42'	S44°13'52"W	28.28'
C21	18°22'05"	124.00'	39.75'	N80°02'50"E	39.58'
C22	18°22'05"	76.00'	24.36'	S80°02'50"W	24.26'
C23	14°39'10"	76.00'	19.44'	N82°53'28"W	19.38'
C24	15°11'44"	124.00'	32.89'	S83°09'45"E	32.79'
C25	89°54'59"	20.00'	31.39'	N45°43'37"W	28.26'
C26	69°38'45"	49.00'	59.56'	S35°35'30"E	55.96'
C27	69°38'45"	20.00'	24.31'	N35°35'29"W	22.84'
C28	90°00'00"	20.00'	31.42'	N44°13'52"E	28.28'
C29	74°52'21"	29.13'	38.07'	N89°13'52"E	35.42'
C30	75°02'24"	29.01'	37.99'	N89°13'52"E	35.33'
C31	89°59'59"	20.00'	31.42'	S45°46'07"E	28.28'
C32	62°11'07"	20.00'	21.71'	S30°19'26"W	20.66'
C33	62°11'07"	45.00'	48.84'	N30°19'26"E	46.48'
C34	90°00'01"	25.00'	39.27'	S44°13'52"W	35.36'
C35	90°00'00"	20.00'	31.42'	N45°46'08"W	28.28'
C36	90°00'00"	20.00'	31.42'	N44°13'52"E	28.28'
C37	89°59'59"	20.00'	31.42'	S45°46'08"E	28.28'
C38	44°18'55"	20.00'	15.47'	S22°55'20"E	15.09'
C42	9°42'52"	50.00'	8.48'	S85°54'42"E	8.47'
C43	90°00'00"	20.00'	31.42'	N44°13'52"E	28.28'

OWNER'S CERTIFICATE

STATE OF TEXAS §

COUNTY OF COLLIN §

WHEREAS, **WAL-MART REAL ESTATE BUSINESS TRUST**, is the owner of a tract of land situated in the William Snider Survey, Abstract No. 821, City of Lucas, Collin County, Texas and being all of a tract of land described in Special Warranty Deed to Wal-Mart Real Estate Business Trust recorded in Instrument No. 20111111001226530, Land Records of Collin County, Texas and all of a tract of land described in Special Warranty Deed to Wal-Mart Real Estate Business Trust recorded in Instrument No. 20111111001226540, Land Records of Collin County, Texas and being more particularly described as follows:

BEGINNING at a 5/8" iron rod with aluminum cap found at the northernmost end of a right-of-way corner clip at the intersection of the east right-of-way line of F.M. 2551 (a variable width right-of-way) and the north right-of-way line of West Lucas Road (a variable width right-of-way);

THENCE with said east right-of-way line, North 00°46'08" West, a distance of 1266.29 feet to a 5/8" iron rod with aluminum cap found at the southeast corner of a tract of land described in Special Warranty Deed to SC Lucas Road, LP, recorded in Instrument No. 20070604000748030, Land Records of Collin County, Texas;

THENCE departing said east right-of-way line and with the south line of said SC Lucas Road, LP, tract, North 89°44'30" East, a distance of 955.59 feet to a point for corner;

THENCE with the west line of said Ahmandi tract, South 00°42'39" East, a distance of 548.98 feet to a 5/8" iron rod with "KHA" cap set at the southwest corner of said Ahmandi tract and the northwest corner of a tract of land described in deed to Billy James Stratton recorded in Volume 770, Page 183, Deed Records of Collin County, Texas;

THENCE with the west line of said Stratton tract, South 01°08'43" East, a distance of 398.40 feet to a 3/8" iron rod found at the southwest corner of said Stratton tract and the northwest corner of a tract of land described in deed to Patti Stratton Frie recorded in Volume 1745, Page 556, Land Records of Collin County, Texas;

THENCE with the west line of said Frie tract, South 01°01'20" East, a distance of 347.33 feet to a 5/8" iron rod with aluminum cap found in said north right-of-way line of West Lucas Road at the northeast corner of a tract of land described in Right-Of-Way Deed to County of Collin, recorded in Volume 3465, Page 272, Land Records of Collin County, Texas;

THENCE with said north right-of-way line, South 89°33'32" West, a distance of 926.37 feet to a 5/8" iron rod with aluminum cap found at the southernmost end of said right-of-way corner clip;

THENCE with said right-of-way corner clip, North 46°48'54" West, a distance of 45.55 feet to the **POINT OF BEGINNING** and containing 28.448 acres or 1,239,197 square feet of land.

The bearing system is based on a bearing of North 89°44'30" East, for the north line of tract of land described in Special Warranty Deed to Wal-Mart Real Estate Business Trust, recorded in Instrument No. 20111111001226530, Land Records of Collin County, Texas.

NOW THEREFORE, KNOW ALL MEN BY THESE PRESENTS:

That **WAL-MART REAL ESTATE BUSINESS TRUST**, acting by and through its duly authorized agent, does hereby bind itself and its heirs, assignees and successors of title this plat designating the hereinabove described property as **WAL-MART LUCAS ADDITION**, an addition to the City of Lucas, and do hereby dedicate to the public use forever the streets, alleys, and right-of-way easements shown thereon, and do hereby reserve the easement strips shown on this plat for the mutual use and accommodation of garbage collection agencies and all public utilities desiring to use or using same. Any public utility shall have the right to remove and keep removed all or part of any buildings, fences, trees, shrubs, or other improvements or growths that in any way endanger or interfere with the construction, maintenance or efficiency of its respective systems on any of these easements strips, and any public utility shall at all times have the right of ingress and egress to and from and upon the said easement strips for the purpose of constructing, reconstructing, inspecting, patrolling, without the necessity at any time of procuring the permission of anyone. Additionally, I certify that **WAL-MART REAL ESTATE BUSINESS TRUST** is the sole owner of the dedicated property and that no other's interest are attached to this property unless otherwise indicated on the required Mortgage Holder Certification that is included on this plat. This plat approved subject to all platting ordinances, rules, regulations and resolutions of the City of Lucas, Texas.

Witness my hand at LUCAS, Texas, this 16th day of November, 2012.

WAL-MART REAL ESTATE BUSINESS TRUST

BY: [signature]

Name: MICHAEL ALLAN

Title: DIRECTOR OF PROJECT DESIGN

STATE OF ARKANSAS §

COUNTY OF BENTON §

Before me, the undersigned authority, a Notary Public in the State of Arkansas, on this day personally appeared Michael Allan, known to me to be the persons whose names are subscribed to the foregoing instrument and acknowledged to me that they each executed the same for the purpose and considerations therein expressed.

Given under my hand and seal of office, this 16th day of November 2012.

[signature]

Notary Public in and for the State of Arkansas

"NOTARY SEAL"
Kimberly Pruitt
State of Arkansas, A County Benton
My Commission Expires 11/1/2015

SURVEYOR'S CERTIFICATION

KNOW ALL MEN BY THESE PRESENTS:

That I, Dana Brown, do hereby certify, that I prepared this plat from an actual on the ground survey of the land as described and that the corner monuments shown thereon were properly placed under my personal supervision in accordance with the Platting Rules and Regulations of the City of Lucas Planning and Zoning Commission.

[signature]

Dana Brown
Registered Professional Land Surveyor No. 5336
Kimley-Horn and Associates, Inc.
12750 Merit Drive, Suite 1000
Dallas, Texas 75251-1516
Ph. 972-770-1300
dana.brown@kimley-horn.com

STATE OF TEXAS
REGISTERED
DANA BROWN
5336
PROFESSIONAL LAND SURVEYOR

STATE OF TEXAS §

COUNTY OF DALLAS §

Before me, the undersigned authority, a Notary Public in and for said County and State, on this day personally appeared Dana Brown, known to me to be the person whose name is subscribed to the foregoing instrument and acknowledged to me that he/she executed the same for the purpose and considerations therein expressed.

Given under my hand and seal of office, this 13 day of November, 2012.

[signature]

Notary Public in and for the State of Texas

TANYA JOSEPHINE DELIZ
My Commission Expires
September 28, 2015

CITY APPROVAL CERTIFICATE

This plat is hereby approved by the Planning and Zoning Commission of the City of Lucas, Texas

[signature] 11-26-12

Chairman, Planning and Zoning Commission Date

CITY OF LUCAS, TEXAS
SEAL

ATTEST:

[signature] 11-26-12

Signature Date

Kathy Wingo, City Secretary

Name & Title

The Director of Public Works of the City of Lucas, Texas hereby certifies that to the best of his/her knowledge or belief, this subdivision plat conforms to all requirements of the Code of Ordinances and with engineering construction standards and processes adopted by the City of Lucas, Texas as to which his/her approval is required.

[signature] 11-26-12

Director of Public Works Date

The Director of Planning and Community Development of the City of Lucas, Texas hereby certifies that to the best of his/her knowledge or belief, this subdivision plat conforms to all requirements of the Code of Ordinances, or as may have been amended or modified, as allowed, by the Planning and Zoning Commission as to which his/her approval is required.

[signature] 11/26/12

Director of Planning and Community Development Date

NOTES

1. According to Map No. 48085C0405J dated June 2, 2009, of the National Flood Insurance Program Map, Flood Insurance Rate Map of Collin County, Texas, Federal Emergency Management Agency, Federal Insurance Administration, this property is not within a special flood hazard area. If this site is within an identified special flood hazard area, this flood statement does not imply that the property and/or the structures thereon will be free from flooding or flood damage. On rare occasions, greater floods can and will occur and flood heights may be increased by man-made or natural causes. This flood statement shall not create liability on the part of the surveyor.

2. The 15' wide right-of-way dedicated by this plat, adjacent to F.M. 2551, shall be used only for road construction purposes and NTMWD use. Roadways and utilities, both public and private, are restricted to crossings of 45-degrees or greater. No parallel layout of public utilities are permitted within the 15' right-of-way.

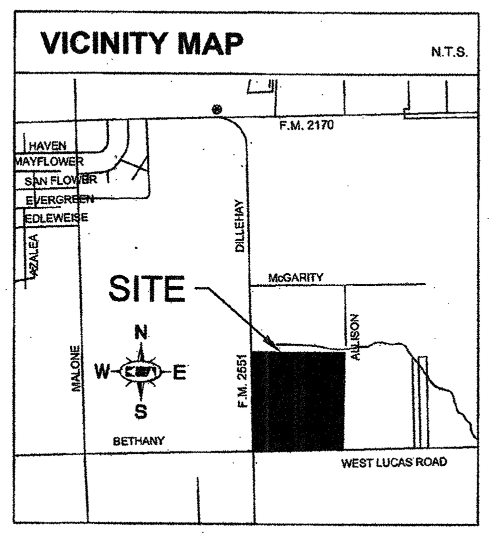

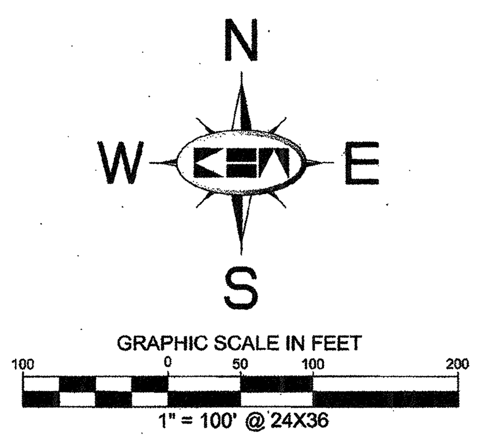

FROM:
R-6821-000-0310-1
R-6821-000-0330-1
FOR TAX YEAR 2013

LEGEND

Δ = DELTA ANGLE, CENTRAL ANGLE
P.O.C. = POINT OF COMMENCING
P.O.B. = POINT OF BEGINNING
5/8" IRFC = 5/8" IRON ROD W/CAP FOUND
IPF = IRON PIPE FOUND
C.M. = CONTROLLING MONUMENT
D.R.C.C.T. = DEED RECORDS OF COLLIN CO. TEXAS
L.R.C.C.T. = LAND RECORDS, COLLIN CO. TEXAS
INST. NO. = INSTRUMENT NUMBER
EE = ELECTRIC EASEMENT BY THIS PLAT
DETE = DETENTION EASEMENT BY THIS PLAT
FLAUE = FIRE LINE, ACCESS & UTILITY EASEMENT BY THIS PLAT
FUE = FRANCHISE UTILITY EASEMENT BY THIS PLAT
SSE = SANITARY SEWER EASEMENT BY THIS PLAT
WE = WATER EASEMENT BY THIS PLAT
BS = BUILDING SETBACK BY THIS PLAT
NTMWDE = EXCLUSIVE EASEMENT TO NORTH TEXAS MUNICIPAL WATER DISTRICT BY THIS PLAT

ENGINEER:
KIMLEY-HORN AND ASSOC., INC.
5750 GENESIS COURT, SUITE 200
FRISCO, TEXAS 75034
CONTACT: Lauren Nuffer
lauren.nuffer@kimley-horn.com

SURVEYOR:
KIMLEY-HORN AND ASSOC., INC.
12750 MERIT DRIVE, SUITE 1000 DALLAS, TEXAS 75251
CONTACT: Dana Brown
dana.brown@kimley-horn.com

OWNER:
Wal-Mart Real Estate Business Trust
2001 SE 10th Street
Bentonvile, Arkansas 72716-0550
Ph. No. : (479) 273-4000

Filed and Recorded
Official Public Records
Stacey Kemp, County Clerk
Collin County, TEXAS
12/06/2012 01:52:35 PM
$21.00 DFOSTER
20121206010003070

2012-457

S10306

FINAL PLAT
WAL-MART LUCAS ADDITION
LOT 1, LOT 2, LOT 3 & LOT 4, BLOCK A
BEING 28.448 ACRES OUT OF THE WILLIAM SNIDER SURVEY
ABSTRACT NO. 821
CITY OF LUCAS, COLLIN COUNTY, TEXAS

Kimley-Horn and Associates, Inc.
12750 Merit Drive, Suite 1000
Dallas, Texas 75251
Tel. No. (972) 770-1300
Fax No. (972) 239-3820

Scale	Drawn by	Checked by	Date	Project No.	Sheet No.
1" = 100'	SRD	DAB	NOV. 2012	063362198	1 OF 1

Copyright © 2011
Kimley-Horn and Associates, Inc.
All rights reserved

DWG NAME: K:\DAL_SURVEY\063362198-WALMART LUCAS\DWG\063362199-WALMART LUCAS FINAL PLAT.DWG PLOTTED BY DUNN, STACY 11/13/2012 2:10 PM LAST SAVED 11/13/2012 2:09 PM

GENERAL CONSTRUCTION NOTES

1. **STANDARDS AND SPECIFICATIONS:** ALL MATERIALS, CONSTRUCTION METHODS, WORKMANSHIP, EQUIPMENT, SERVICES AND TESTING FOR ALL PUBLIC IMPROVEMENTS SHALL BE IN ACCORDANCE WITH THE GOVERNING AUTHORITIES' ORDINANCES, REGULATIONS, REQUIREMENTS, STATUTES, SPECIFICATIONS AND DETAILS, LATEST PRINTING AND AMENDMENTS THERETO. THE GOVERNING AUTHORITIES' PUBLIC WORKS AND WATER DEPARTMENT REQUIREMENTS, PLUMBING CODES, AND FIRE DEPARTMENT REGULATIONS SHALL TAKE PRECEDENT FOR ALL PRIVATE IMPROVEMENTS WHERE APPLICABLE. ALL OTHER PRIVATE CONSTRUCTION, NOT REGULATED BY THE GOVERNING AUTHORITY, SHALL BE IN ACCORDANCE WITH THE STANDARD SPECIFICATIONS FOR PUBLIC WORKS CONSTRUCTION, NORTH CENTRAL TEXAS - NORTH CENTRAL TEXAS COUNCIL OF GOVERNMENTS, LATEST PRINTING AND AMENDMENTS THERETO, EXCEPT AS MODIFIED OR AMENDED BY THE PROJECT CONTRACT DOCUMENTS.

2. **EXAMINATION OF SITE:** THE CONTRACTOR ACKNOWLEDGES THAT HE HAS INVESTIGATED AND SATISFIED HIMSELF AS TO THE CONDITIONS AFFECTING THE WORK, INCLUDING BUT NOT RESTRICTED TO THOSE BEARING UPON TRANSPORTATION, DISPOSAL, HANDLING AND STORAGE OF MATERIALS, AVAILABILITY OF LABOR, WATER, ELECTRIC POWER, ROADS AND UNCERTAINTIES OF WEATHER, OR SIMILAR PHYSICAL CONDITIONS AT THE SITE, CONDITIONS OF THE GROUND, THE CHARACTER OF EQUIPMENT AND FACILITIES NEEDED PRELIMINARY TO AND DURING PERFORMANCE OF THE WORK. THE CONTRACTOR ACKNOWLEDGES THAT HE HAS INSPECTED THE SITE OF THE WORK AND IS FAMILIAR WITH THE SOIL CONDITIONS TO BE ENCOUNTERED. ANY FAILURE BY THE CONTRACTOR TO ACQUAINT HIMSELF WITH THE AVAILABLE INFORMATION WILL NOT RELIEVE HIM FROM RESPONSIBILITY FOR ESTIMATING PROPERLY THE DIFFICULTY OR COST OF SUCCESSFULLY PERFORMING THE WORK. THE DEVELOPER ASSUMES NO RESPONSIBILITY FOR ANY CONCLUSIONS OR INTERPRETATIONS MADE BY THE CONTRACTOR ON THE BASIS OF THE INFORMATION MADE AVAILABLE BY THE DEVELOPER.

3. **SUBSURFACE INVESTIGATION:** SUBSURFACE EXPLORATION TO ASCERTAIN THE NATURE OF SOILS, INCLUDING THE AMOUNT OF ROCK, IF ANY, IS THE RESPONSIBILITY OF THE CONTRACTOR. IT SHALL BE THE RESPONSIBILITY OF THE CONTRACTOR TO MAKE SUCH SUBSURFACE INVESTIGATIONS AS HE DEEMS NECESSARY TO DETERMINE THE NATURE OF THE MATERIAL TO BE ENCOUNTERED. SOME SUBSURFACE EXPLORATION HAS BEEN PERFORMED BY THE GEOTECHNICAL ENGINEER OF RECORD ON THE PROJECT AND IS PROVIDED FOR INFORMATIONAL PURPOSES. THE DEVELOPER AND ENGINEER DISCLAIM ANY RESPONSIBILITY FOR THE ACCURACY, TRUE LOCATION AND EXTENT OF THE SOILS INFORMATION THAT HAS BEEN PREPARED BY OTHERS. THEY FURTHER DISCLAIM RESPONSIBILITY FOR INTERPRETATION OF THAT DATA BY THE CONTRACTOR, AS IN PROJECTING SOIL BEARING VALUES, ROCK PROFILES, SOILS STABILITY AND THE PRESENCE, LEVEL AND EXTENT OF UNDERGROUND WATER.

4. **TOPOGRAPHIC SURVEY:** TOPOGRAPHIC SURVEY INFORMATION SHOWN ON THE PLANS IS PROVIDED FOR INFORMATIONAL PURPOSES ONLY. THE CONTRACTOR SHALL BE RESPONSIBLE FOR VERIFYING THAT THE INFORMATION SHOWN IS CORRECT AND SHALL NOTIFY THE ENGINEER IMMEDIATELY OF ANY ERRORS, DISCREPANCIES OR OMISSIONS TO THE SURVEY INFORMATION PROVIDED. ANY COSTS INCURRED AS THE RESULT OF NOT CONFIRMING THE ACTUAL SURVEY SHALL BE BORNE BY THE CONTRACTOR.

5. **COMPLIANCE WITH LAWS:** THE CONTRACTOR SHALL FULLY COMPLY WITH ALL LOCAL, STATE AND FEDERAL LAWS, INCLUDING ALL CODES, ORDINANCES AND REGULATIONS APPLICABLE TO THIS CONTRACT AND THE WORK TO BE DONE THEREUNDER, WHICH EXIST OR MAY BE ENACTED LATER BY GOVERNMENTAL BODIES HAVING JURISDICTION OR AUTHORITY FOR SUCH ENACTMENT. ALL WORK REQUIRED UNDER THIS CONTRACT SHALL COMPLY WITH ALL REQUIREMENTS OF LAW, REGULATION, PERMIT OR LICENSE. IF THE CONTRACTOR FINDS THAT THERE IS A VARIANCE, HE SHALL IMMEDIATELY REPORT THIS TO THE DEVELOPER FOR RESOLUTION.

6. **PUBLIC CONVENIENCE AND SAFETY:** IN ACCORDANCE WITH GENERALLY ACCEPTED CONSTRUCTION PRACTICES, THE CONTRACTOR SHALL BE SOLELY AND COMPLETELY RESPONSIBLE FOR CONDITIONS OF THE JOB SITE, INCLUDING SAFETY OF ALL PERSONS AND PROPERTY DURING PERFORMANCE OF THE WORK. THIS REQUIREMENT SHALL APPLY CONTINUOUSLY AND NOT BE LIMITED TO NORMAL WORKING HOURS.

   MATERIALS STORED ON THE WORK SITE SHALL BE SO PLACED, AND THE WORK SHALL AT ALL TIMES BE SO CONDUCTED, AS TO CAUSE NO GREATER OBSTRUCTION TO THE TRAVELING PUBLIC THAN IS CONSIDERED ACCEPTABLE BY THE GOVERNING AUTHORITIES AND THE DEVELOPER. THE MATERIALS EXCAVATED SHALL BE PLACED SO AS NOT TO ENDANGER THE WORK OR PREVENT FREE ACCESS TO ALL FIRE HYDRANTS, WATER VALVES, GAS VALVES, MANHOLES, AND FIRE ALARM OR POLICE CALL BOXES IN THE VICINITY.

   THE DEVELOPER RESERVES THE RIGHT TO REMEDY ANY NEGLECT ON THE PART OF THE CONTRACTOR WITH REGARDS TO THE PUBLIC CONVENIENCE AND SAFETY WHICH MAY COME TO THE DEVELOPER'S ATTENTION, AFTER 24 HOURS NOTICE IN WRITING TO THE CONTRACTOR, SAVE IN CASES OF EMERGENCY, WHEN THE DEVELOPER SHALL HAVE THE RIGHT TO REMEDY ANY NEGLECT WITHOUT NOTICE; AND, IN EITHER CASE, THE COST OF SUCH WORK DONE BY THE DEVELOPER SHALL BE DEDUCTED FROM THE MONIES DUE OR TO BECOME DUE TO THE CONTRACTOR. THE CONTRACTOR SHALL NOTIFY THE DEVELOPER AND THE GOVERNING AUTHORITIES WHEN ANY STREET IS TO BE CLOSED OR OBSTRUCTED. THE CONTRACTOR SHALL KEEP ANY STREET OR STREETS IN CONDITION FOR UNOBSTRUCTED USE BY EMERGENCY SERVICES. WHERE THE CONTRACTOR IS REQUIRED TO CONSTRUCT TEMPORARY BRIDGES OR TO MAKE OTHER ARRANGEMENTS FOR CROSSING OVER DITCHES OR STREAMS, HIS RESPONSIBILITY FOR ACCIDENTS SHALL INCLUDE THE ROADWAY APPROACHES AS WELL AS THE STRUCTURES OF SUCH CROSSINGS.

7. **STORM WATER POLLUTION PREVENTION PLAN (SWP3):** THE CONTRACTOR SHALL COMPLY WITH THE CONDITIONS OF THE SWP3 WHILE CONDUCTING HIS ACTIVITIES ON THE PROJECT. IN ADDITION TO CONSTRUCTING THOSE ITEMS INDICATED ON THE PLAN SHEETS, COMPLIANCE WITH THE SWP3 INCLUDES CONFORMANCE TO CERTAIN PRACTICES AND PROCEDURES (IDENTIFIED IN THE SWP3) DURING PROJECT CONSTRUCTION.

8. **PERMITS AND LICENSES:** THE CONTRACTOR SHALL SECURE AND PAY FOR ALL PERMITS AND LICENSES NECESSARY FOR THE EXECUTION OF THE WORK AND SHALL FULLY COMPLY WITH ALL THEIR TERMS AND CONDITIONS. WHENEVER THE WORK UNDER THIS CONTRACT REQUIRES THE OBTAINING OF PERMITS FROM THE GOVERNING AUTHORITIES, THE CONTRACTOR SHALL FURNISH DUPLICATE COPIES OF SUCH PERMITS TO THE DEVELOPER BEFORE THE WORK COVERED THEREBY IS STARTED. NO WORK WILL BE ALLOWED TO PROCEED BEFORE SUCH PERMITS ARE OBTAINED.

9. **IMPACT FEES:** THE DEVELOPER WILL PAY ALL IMPACT FEES APPLICABLE TO THE PROJECT.

10. **BONDS:** PERFORMANCE, PAYMENT AND MAINTENANCE BONDS WILL BE REQUIRED FROM THE CONTRACTOR FOR ALL WORK CONSIDERED TO BE "PUBLIC" IMPROVEMENTS. BONDS SHALL BE IN THE FORM AND IN THE AMOUNTS AS REQUIRED BY THE GOVERNING AUTHORITIES.

11. **VENDOR'S CERTIFICATION:** ALL MATERIALS USED IN CONSTRUCTION SHALL HAVE A VENDOR'S CERTIFIED TEST REPORT. TEST REPORTS SHALL BE DELIVERED TO THE ENGINEER BEFORE PERMISSION WILL BE GRANTED FOR USE OF THE MATERIAL. ALL VENDOR'S TEST REPORTS SHALL BE SUBJECT TO REVIEW BY THE ENGINEER AND SHALL BE SUBJECT TO VERIFICATION BY TESTING FROM SAMPLES OF MATERIALS AS RECEIVED FOR USE ON THE PROJECT. IN THE EVENT ADDITIONAL TESTS ARE REQUIRED, THEY SHALL BE PERFORMED BY AN APPROVED INDEPENDENT TESTING LABORATORY AND SHALL BE PAID FOR BY THE CONTRACTOR.

12. **TESTING:** THE TESTING AND CONTROL OF ALL MATERIALS USED IN THE WORK SHALL BE DONE BY AN INDEPENDENT TESTING LABORATORY, EMPLOYED AND PAID DIRECTLY BY THE DEVELOPER. IN THE EVENT THE RESULTS OF INITIAL TESTING DO NOT COMPLY WITH THE PLANS AND SPECIFICATIONS, SUBSEQUENT TESTS NECESSARY TO DETERMINE THE ACCEPTABILITY OF MATERIALS OR CONSTRUCTION SHALL BE FURNISHED AND PAID BY THE CONTRACTOR AS DIRECTED BY THE DEVELOPER. PAYMENT WILL BE MADE BY DEDUCTION FROM PAYMENT DUE THE CONTRACTOR.

13. **INSPECTION:** INSPECTION OF THE PROPOSED CONSTRUCTION WILL BE PROVIDED BY THE GOVERNING AUTHORITIES AND/OR THE DEVELOPER. COSTS FOR INSPECTION SERVICES WILL BE PAID BY THE DEVELOPER. THE CONTRACTOR SHALL PROVIDE ASSISTANCE BY PROVIDING EXCAVATION, TRENCH SAFETY, OR OTHER WORK NECESSARY TO FACILITATE INSPECTION ACTIVITIES, AND SHALL GIVE SUFFICIENT NOTICE WELL IN ADVANCE OF PENDING CONSTRUCTION ACTIVITIES TO THE GOVERNING AUTHORITIES AND/OR DEVELOPER FOR SCHEDULING OF INSPECTION SERVICES. THE CONTRACTOR SHALL BE RESPONSIBLE FOR THE DETERMINATION OF ANY REQUIRED INSPECTIONS, THE SCHEDULING, CONTROL OF INSPECTIONS AND THE ACCEPTANCE OF ALL PUBLIC AND/OR PRIVATE UTILITIES BY THE APPROPRIATE GOVERNING AUTHORITY PRIOR TO TRENCH BACKFILLING.

14. **SHOP DRAWINGS:** THE CONTRACTOR SHALL PROVIDE, REVIEW, APPROVE AND SUBMIT ALL SHOP DRAWINGS, PRODUCT DATA AND SAMPLES REQUIRED BY THE GOVERNING AUTHORITIES AND THE PROJECT CONTRACT DOCUMENTS IN ACCORDANCE WITH ITEM 1.28 OF THE STANDARD SPECIFICATIONS FOR PUBLIC WORKS CONSTRUCTION, NORTH CENTRAL TEXAS - NORTH CENTRAL TEXAS COUNCIL OF GOVERNMENTS.

15. **SURVEYING:** ALL SURVEYING REQUIRED FOR CONSTRUCTION STAKING SHALL BE THE RESPONSIBILITY OF THE CONTRACTOR. THE DEVELOPER SHALL PROVIDE THE PROPERTY CORNERS AND TWO BENCHMARKS FOR USE AS HORIZONTAL AND VERTICAL DATUM. THE CONTRACTOR SHALL EMPLOY A REGISTERED PROFESSIONAL LAND SURVEYOR TO PERFORM ALL ADDITIONAL SURVEY, LAYOUT AND MEASUREMENT WORK NECESSARY FOR THE COMPLETION OF THE PROJECT.

16. **PROTECTION OF PROPERTY CORNERS AND BENCHMARKS:** THE CONTRACTOR SHALL PROTECT ALL PROPERTY CORNER MARKERS AND BENCHMARKS, AND WHEN ANY SUCH MARKERS OR MONUMENTS ARE IN DANGER OF BEING DISTURBED, THEY SHALL BE PROPERLY REFERENCED AND IF DISTURBED SHALL BE RESET BY A REGISTERED PUBLIC SURVEYOR AT THE EXPENSE OF THE CONTRACTOR.

17. **EXISTING STRUCTURES:** THE PLANS SHOW THE LOCATION OF ALL KNOWN SURFACE AND SUBSURFACE STRUCTURES; HOWEVER, THE DEVELOPER AND ENGINEER ASSUME NO RESPONSIBILITY FOR FAILURE TO SHOW ANY OR ALL OF THESE STRUCTURES ON THE PLANS, OR TO SHOW THEM IN THEIR EXACT LOCATION. SUCH FAILURE SHALL NOT BE CONSIDERED SUFFICIENT BASIS FOR CLAIMS FOR ADDITIONAL COMPENSATION FOR EXTRA WORK OR FOR INCREASING THE PAY QUANTITIES IN ANY MANNER WHATSOEVER, UNLESS THE OBSTRUCTION ENCOUNTERED IS SUCH AS TO REQUIRE CHANGES IN THE LINES OR GRADES, OR REQUIRE THE CONSTRUCTION OF SPECIAL WORK, FOR WHICH PROVISIONS ARE NOT MADE IN THE PLANS.

18. **PROTECTION OF EXISTING UTILITIES:** AS REQUIRED BY "THE TEXAS UNDERGROUND FACILITY DAMAGE PREVENTION AND SAFETY ACT", TEXAS ONE CALL SYSTEM MUST BE CONTACTED (800-344-8377) AT LEAST 48 HOURS PRIOR TO ANY EXCAVATION OPERATIONS BEING PERFORMED. IT IS THE CONTRACTOR'S RESPONSIBILITY TO CONTACT TEXAS ONE CALL SYSTEM.
    THE LOCATION AND DIMENSIONS SHOWN ON THE PLANS RELATIVE TO EXISTING UTILITIES ARE BASED ON THE BEST RECORDS AND/OR FIELD INFORMATION AVAILABLE AND ARE NOT GUARANTEED BY THE DEVELOPER OR ENGINEER TO BE ACCURATE AS TO LOCATION AND DEPTH. IT SHALL BE THE CONTRACTOR'S RESPONSIBILITY TO VERIFY LOCATIONS OF ADJACENT AND/OR CONFLICTING UTILITIES SUFFICIENTLY IN ADVANCE OF HIS ACTIVITIES IN ORDER THAT HE MAY NEGOTIATE SUCH LOCAL ADJUSTMENTS AS NECESSARY IN THE CONSTRUCTION PROCESS TO PROVIDE ADEQUATE CLEARANCES.
    THE CONTRACTOR SHALL TAKE ALL NECESSARY PRECAUTIONS IN ORDER TO PROTECT ALL EXISTING UTILITIES, SERVICES AND STRUCTURES ENCOUNTERED, WHETHER OR NOT THEY ARE INDICATED ON THE PLANS. ANY DAMAGE TO UTILITIES RESULTING FROM THE CONTRACTOR'S OPERATIONS SHALL BE RESTORED AT HIS EXPENSE. TO AVOID UNNECESSARY INTERFERENCE'S OR DELAYS, THE CONTRACTOR SHALL COORDINATE ALL UTILITY REMOVALS, REPLACEMENTS AND CONSTRUCTION WITH THE APPROPRIATE GOVERNING AUTHORITIES, THEN REQUEST WRITTEN AUTHORIZATION FROM THE ENGINEER. THE DEVELOPER WILL NOT BE LIABLE FOR DAMAGES DUE TO DELAY AS A RESULT OF THE ABOVE.

19. **DAMAGE TO EXISTING FACILITIES:** ALL UTILITIES, PAVEMENT, SIDEWALKS, WALLS, FENCES, ETC. NOT DESIGNATED TO BE REMOVED BUT THAT ARE DAMAGED DURING CONSTRUCTION ACTIVITIES SHALL BE REPLACED TO A CONDITION AS GOOD AS OR BETTER THAN THE CONDITIONS PRIOR TO STARTING THE WORK, SOLELY AT THE EXPENSE OF THE CONTRACTOR.

20. **FIRE AND LIFE SAFETY SYSTEMS:** CONTRACTOR SHALL NOT REMOVE, DISABLE OR DISRUPT EXISTING FIRE OR LIFE SAFETY SYSTEMS WITHOUT WRITTEN PERMISSION FROM THE GOVERNING AUTHORITY.

21. **TRENCH SAFETY:** IT SHALL BE THE RESPONSIBILITY OF THE CONTRACTOR TO PROVIDE AND MAINTAIN A VIABLE TRENCH SAFETY SYSTEM AT ALL TIMES DURING CONSTRUCTION ACTIVITIES. THE CONTRACTOR IS DIRECTED TO BECOME KNOWLEDGEABLE AND FAMILIAR WITH THE STANDARDS AS SET BY THE OCCUPATIONAL SAFETY AND HEALTH ADMINISTRATION (OSHA) AND THE STATE OF TEXAS LAW CONCERNING TRENCHING AND SHORING. THE CONTRACTOR SHALL PROVIDE TRENCH SAFETY SYSTEM PLANS, PREPARED AND SEALED BY A PROFESSIONAL ENGINEER LICENSED IN THE STATE OF TEXAS, FOR THE IMPLEMENTATION OF SAFETY CONTROL MEASURES MEETING THE REQUIREMENTS OF THE GOVERNING AUTHORITIES THAT WILL BE IN EFFECT DURING THE PERIOD OF CONSTRUCTION OF THE PROJECT.

22. **SAFETY RESTRICTIONS - WORK NEAR HIGH VOLTAGE LINES:** THE FOLLOWING PROCEDURES WILL BE FOLLOWED REGARDING THE SUBJECT ITEM ON THIS CONTRACT:

    A. A WARNING SIGN NOT LESS THAN FIVE INCHES BY SEVEN INCHES PAINTED YELLOW WITH BLACK LETTERS THAT ARE LEGIBLE AT 12 FEET SHALL BE PLACED INSIDE AND OUTSIDE VEHICLES SUCH AS CRANES, DERRICKS, POWER SHOVELS, DRILLING RIGS, PILE DRIVER, HOISTING EQUIPMENT OR SIMILAR APPARATUS. THE WARNING SIGN SHALL READ AS FOLLOWS: "WARNING - UNLAWFUL TO OPERATE THIS EQUIPMENT WITHIN SIX FEET OF HIGH VOLTAGE LINES".

    B. EQUIPMENT THAT MAY BE OPERATED WITHIN TEN FEET OF HIGH VOLTAGE LINES SHALL HAVE AN INSULATING CAGE-TYPE OF GUARD ABOUT THE BOOM OR ARM, EXCEPT BACKHOES OR DIPPERS, AND INSULATOR LINKS ON THE LIFT HOOK CONNECTIONS.

    C. WHEN NECESSARY TO WORK WITHIN SIX FEET OF HIGH VOLTAGE ELECTRIC LINES, NOTIFY THE POWER COMPANY WHO WILL ERECT TEMPORARY MECHANICAL BARRIERS, DE-ENERGIZE THE LINE OR RAISE OR LOWER THE LINE. THE WORK DONE BY THE POWER COMPANY SHALL BE AT THE EXPENSE OF THE CONTRACTOR. THE NOTIFYING DEPARTMENT SHALL MAINTAIN AN ACCURATE LOG OF ALL SUCH CALLS TO THE POWER COMPANY AND SHALL RECORD ACTION TAKEN IN EACH CASE.

    D. THE CONTRACTOR IS REQUIRED TO MAKE ARRANGEMENTS WITH THE POWER COMPANY FOR THE TEMPORARY RELOCATION OR RAISING OF HIGH VOLTAGE LINES AT THE CONTRACTOR'S SOLE COST AND EXPENSE.

    E. NO PERSON SHALL WORK WITHIN SIX FEET OF A HIGH VOLTAGE LINE WITHOUT PROTECTION HAVING BEEN TAKEN AS OUTLINED IN PARAGRAPH C. ABOVE.

23. **TRAFFIC CONTROL:** IT SHALL BE THE RESPONSIBILITY OF THE CONTRACTOR TO DEVELOP AND SUBMIT FOR APPROVAL BY THE GOVERNING AUTHORITIES, A TRAFFIC CONTROL PLAN, PREPARED AND SEALED BY A PROFESSIONAL ENGINEER LICENSED IN THE STATE OF TEXAS, OUTLINING TRAFFIC MANAGEMENT PROCEDURES TO BE PROVIDED DURING CONSTRUCTION. TRAFFIC CONTROL MEASURES SHALL BE PROVIDED IN ACCORDANCE WITH THE FOLLOWING ADDITIONAL REQUIREMENTS:

    A. CONSTRUCTION OF SIGNING AND BARRICADES SHALL CONFORM WITH THE "2011 TEXAS MANUAL ON UNIFORM TRAFFIC CONTROL DEVICES", AS CURRENTLY AMENDED, TEXAS DEPARTMENT OF HIGHWAYS AND PUBLIC TRANSPORTATION.

    B. THE CONTRACTOR SHALL BE REQUIRED TO FURNISH BARRICADES, FLARES, FLAGMEN, ETC., FOR THE PROTECTION OF THE PUBLIC, EMPLOYEES AND THE WORK.

    C. THE CONTRACTOR SHALL PERFORM THEIR WORK IN SUCH A MANNER AS TO CREATE A MINIMUM OF INTERRUPTION TO TRAFFIC ALONG ADJACENT ROADWAYS. TWO WAY TRAFFIC MUST BE MAINTAINED ON ALL ROADWAYS AT ALL TIMES THROUGHOUT CONSTRUCTION UNLESS WRITTEN PERMISSION IS GRANTED BY THE GOVERNING AUTHORITIES.

    D. ALL SIGNAGE, MARKINGS, LIGHTING, BARRICADES, FLAGMEN AND OTHER DEVICES AND PERSONNEL REQUIRED FOR TRAFFIC CONTROL DURING CONSTRUCTION OF THE PROJECT WILL BE INCLUDED IN THE CONTRACT AMOUNT.

    E. ALL TRAFFIC CONTROL DEVICES USED DURING NIGHTTIME SHALL BE REFLECTORIZED, ILLUMINATED FROM WITHIN OR EXTERNALLY ILLUMINATED.

    F. THE CONTRACTOR SHALL NOT REMOVE ANY REGULATORY SIGN, INSTRUCTIONAL SIGN, WARNING SIGN, STREET NAME SIGN OR ANY SIGNAL WHICH CURRENTLY EXISTS WITHOUT THE CONSENT OF THE GOVERNING AUTHORITIES.

    G. THE CONTRACTOR SHALL MAINTAIN AND REPLACE, WHERE NECESSARY, ALL SIGNS, LIGHTS, MARKINGS AND TEMPORARY PAVEMENT THROUGHOUT THE CONSTRUCTION PERIOD.

    H. THE CONTRACTOR SHALL REMOVE ALL TRAFFIC CONTROL MEASURES AT THE END OF CONSTRUCTION AND RESTORE UNIMPROVED PAVEMENT AND OTHER DISTURBED AREAS TO THEIR ORIGINAL CONDITION.

24. **ACCESS TO ADJACENT PROPERTIES:** ACCESS TO ADJACENT PROPERTIES SHALL BE MAINTAINED AT ALL TIMES UNLESS OTHERWISE DIRECTED BY THE GOVERNING AUTHORITIES AND/OR DEVELOPER.

25. **ACCESS ROUTES, STAGING AREAS AND STORAGE AREAS:** ALL PRIVATE HAUL ROADS, ACCESS ROUTES, STAGING AND STORAGE AREAS SHALL BE SUBJECT TO THE APPROVAL OF THE DEVELOPER. THE CONTRACTOR SHALL BE RESPONSIBLE FOR MAINTAINING AND REPAIRING ALL ROADS AND OTHER FACILITIES USED DURING CONSTRUCTION. UPON COMPLETION OF THE PROJECT, ALL HAUL ROADS, ACCESS ROADS, STAGING AND STORAGE AREAS SHALL BE RESTORED TO A CONDITION EQUAL TO OR BETTER THAN THAT AT THE TIME THE CONTRACTOR COMMENCED WORK ON THE PROJECT.

26. **PARKING OF CONSTRUCTION EQUIPMENT:** AT NIGHT AND DURING ALL OTHER PERIODS OF TIME WHEN EQUIPMENT IS NOT BEING ACTIVELY USED FOR THE CONSTRUCTION WORK, THE CONTRACTOR SHALL PARK THE EQUIPMENT AT LOCATIONS APPROVED BY THE DEVELOPER. DURING THE CONSTRUCTION OF THE PROJECT, THE CONTRACTOR SHALL COMPLY WITH THE PRESENT ZONING REQUIREMENTS OF THE GOVERNING AUTHORITIES IN THE USE OF VACANT PROPERTY FOR STORAGE PURPOSES. THE CONTRACTOR SHALL ALSO PROVIDE ADEQUATE BARRICADES, MARKERS AND LIGHTS TO PROTECT THE DEVELOPER, THE GOVERNING AUTHORITIES, THE PUBLIC. ALL BARRICADES, LIGHTS, AND MARKERS MUST MEET THE REQUIREMENTS OF THE GOVERNING AUTHORITIES' REGULATIONS.

27. **WATER FOR CONSTRUCTION:** THE CONTRACTOR SHALL MAKE THE NECESSARY ARRANGEMENTS FOR PURCHASING WATER FROM THE GOVERNING AUTHORITY FOR HIS USE ON THE PROJECT SITE. COSTS ASSOCIATED WITH THIS SERVICE SHALL BE INCLUDED IN THE CONTRACT AMOUNT.

28. **TEMPORARY ELECTRIC AND COMMUNICATIONS FOR CONSTRUCTION:** THE CONTRACTOR SHALL MAKE THE NECESSARY ARRANGEMENTS FOR INSTALLATION AND PURCHASING OF TEMPORARY ELECTRIC AND COMMUNICATIONS SERVICES FROM THE GOVERNING AUTHORITIES FOR HIS USE ON THE PROJECT SITE. COSTS ASSOCIATED WITH THESE SERVICES SHALL BE INCLUDED IN THE CONTRACT AMOUNT.

29. **FENCES:** ALL FENCES ENCOUNTERED AND REMOVED DURING CONSTRUCTION, EXCEPT THOSE DESIGNATED TO BE REMOVED OR RELOCATED, SHALL BE RESTORED TO THE ORIGINAL OR BETTER THAN CONDITION UPON COMPLETION OF THE PROJECT. WHERE WIRE FENCING, EITHER WIRE MESH OR BARBED WIRE, IS TO BE CROSSED, THE CONTRACTOR SHALL SET CROSS-BRACED POSTS ON EITHER SIDE OF THE CROSSING. TEMPORARY FENCING SHALL BE ERECTED IN PLACE OF THE FENCING REMOVED WHENEVER THE WORK IS NOT IN PROGRESS, AND WHEN THE SITE IS VACATED OVERNIGHT AND/OR AT ALL TIMES TO PREVENT PERSONS AND/OR LIVESTOCK FROM ENTERING THE CONSTRUCTION AREA. THE COST OF FENCE REMOVAL, TEMPORARY CLOSURES AND REPLACEMENT SHALL BE INCLUDED IN THE CONTRACT.

30. **DRAINAGE CHANNELS:** WHERE EXISTING DRAINAGE CHANNELS ARE TEMPORARILY DISTURBED OR BLOCKED DURING CONSTRUCTION, IT SHALL BE RESTORED TO THE ORIGINAL CONDITION, GRADE AND CROSS SECTION AFTER CONSTRUCTION IS COMPLETED.

31. **COORDINATION WITH OTHERS:** IN THE EVENT THAT OTHER CONTRACTORS ARE DOING WORK IN THE SAME AREA SIMULTANEOUSLY WITH THE PROJECT, THE CONTRACTOR SHALL COORDINATE HIS PROPOSED CONSTRUCTION WITH THAT OF THE OTHER CONTRACTORS.

32. **CONDITION OF SITE DURING CONSTRUCTION:** DURING CONSTRUCTION OF THE WORK, THE CONTRACTOR SHALL, AT ALL TIMES, KEEP THE SITE OF THE WORK AND ADJACENT PREMISES AS FREE FROM MATERIAL, DEBRIS AND RUBBISH AS IS PRACTICABLE AND SHALL REMOVE SAME FROM ANY PORTION OF THE SITE IF, IN THE OPINION OF THE DEVELOPER, SUCH MATERIAL, DEBRIS OR RUBBISH CONSTITUTES A NUISANCE OR IS OBJECTIONABLE. IN CASE OF FAILURE ON THE PART OF THE CONTRACTOR UNDER HIS CONTRACT, OR WHERE SUFFICIENT CONTRACT FUNDS ARE UNAVAILABLE FOR THIS PURPOSE, THE CONTRACTOR OR HIS SURETY SHALL REIMBURSE THE DEVELOPER FOR ALL SUCH COSTS.

33. **EXISTING ROADWAYS:** THE CONTRACTOR SHALL BE RESPONSIBLE FOR MAINTAINING THE CLEANLINESS OF EXISTING PAVED ROADS. ALL COSTS ASSOCIATED WITH MAINTAINING THE CLEANLINESS OF EXISTING ROADS SHALL BE INCLUDED IN THE CONTRACT AMOUNT.

34. **DUST CONTROL:** THE CONTRACTOR SHALL TAKE ALL PRECAUTIONS NECESSARY TO CONTROL DUST ON THE PROJECT SITE BY SPRINKLING OF WATER, OR ANY OTHER METHODS APPROVED BY THE GOVERNING AUTHORITIES, AND SHALL PROVIDE ALL EQUIPMENT AND PERSONNEL REQUIRED TO PREVENT DUST FROM BECOMING A NUISANCE TO THE ADJACENT PROPERTIES.

35. **CLEAN-UP FOR FINAL ACCEPTANCE:** THE CONTRACTOR SHALL MAKE A FINAL CLEAN UP OF ALL PARTS OF THE WORK BEFORE ACCEPTANCE BY THE DEVELOPER. THIS CLEAN UP SHALL INCLUDE REMOVAL OF ALL OBJECTIONABLE MATERIALS AND, IN GENERAL, PREPARING THE SITE OF THE WORK IN AN ORDERLY MANNER OF APPEARANCE.

36. **REMOVAL OF DEFECTIVE AND UNAUTHORIZED WORK:** ALL WORK WHICH HAS BEEN REJECTED OR CONDEMNED SHALL BE REPAIRED, OR IF IT CANNOT BE REPAIRED SATISFACTORILY, IT SHALL BE REMOVED AND REPLACED AT THE CONTRACTOR'S EXPENSE. DEFECTIVE MATERIALS SHALL BE IMMEDIATELY REMOVED FROM THE WORK SITE. WORK DONE BEYOND THE LINE OR NOT IN CONFORMITY WITH THE GRADES SHOWN ON THE DRAWINGS OR AS PROVIDED, WORK DONE WITHOUT REQUIRED INSPECTION, OR ANY EXTRA OR UNCLASSIFIED WORK DONE WITHOUT WRITTEN AUTHORITY AND PRIOR AGREEMENT IN WRITING AS TO PRICES, SHALL BE AT THE CONTRACTOR'S RISK, AND WILL BE CONSIDERED UNAUTHORIZED, AND AT THE OPTION OF THE DEVELOPER MAY NOT BE MEASURED AND PAID FOR AND MAY BE ORDERED REMOVED AT THE CONTRACTOR'S EXPENSE. UPON FAILURE OF THE CONTRACTOR TO REPAIR SATISFACTORILY OR TO REMOVE AND REPLACE, IF SO DIRECTED, REJECTED, UNAUTHORIZED OR CONDEMNED WORK OR MATERIALS IMMEDIATELY AFTER RECEIVING NOTICE FROM THE DEVELOPER, THE DEVELOPER WILL, AFTER GIVING WRITTEN NOTICE TO THE CONTRACTOR, HAVE THE AUTHORITY TO CAUSE DEFECTIVE WORK TO BE REMEDIED OR REMOVED AND REPLACED, OR TO CAUSE UNAUTHORIZED WORK TO BE REMOVED AND TO DEDUCT THE COST THEREOF FROM ANY MONIES DUE OR TO BECOME DUE TO THE CONTRACTOR.

37. **DISPOSITION AND DISPOSAL OF EXCESS AND UNSUITABLE MATERIALS:** ALL MATERIALS TO BE REMOVED FROM THE SITE INCLUDING BUT NOT LIMITED TO EXCESS MATERIAL AND UNSUITABLE MATERIALS SUCH AS CONCRETE, ASPHALT, LARGE ROCKS, REFUSE, AND OTHER DEBRIS SHALL BECOME THE PROPERTY OF THE CONTRACTOR AND SHALL BE DISPOSED OF OUTSIDE THE LIMITS OF THE PROJECT AT THE CONTRACTOR'S EXPENSE. THE CONTRACTOR SHALL ALSO COMPLY WITH ALL APPLICABLE LAWS GOVERNING SPILLAGE OF DEBRIS WHILE TRANSPORTING TO A DISPOSAL SITE.

38. **SEEDING:** THE CONTRACTOR SHALL PROVIDE SEEDING, WATERING, FERTILIZING AND REQUIRED MAINTENANCE FOR THE GRASSING OF ALL UNPAVED AREAS OF DEDICATED RIGHT-OF-WAY, EASEMENTS, AND ALL OTHER DISTURBED AREAS OF CONSTRUCTION NOT COVERED BY THE LANDSCAPE PLAN FOR THE PROJECT. SEEDING SHALL ALSO BE PROVIDED IN CONFORMANCE WITH THE REQUIREMENTS OF THE PROJECT STORM WATER POLLUTION PREVENTION PLAN IN ORDER TO ESTABLISH A GRASS COVER ON DISTURBED AREAS SUBJECTED TO THE EROSION OF THE SOIL SURFACE.

39. **RECORD DRAWINGS:** THE CONTRACTOR SHALL MAINTAIN AN ACCURATE RECORD OF THE INSTALLATION OF ALL MATERIALS AND SYSTEMS COVERED BY THE PROJECT CONTRACT DOCUMENTS. THESE RECORD PRINTS WILL BE REVIEWED BY THE DEVELOPER EACH MONTH PRIOR TO THE PRELIMINARY REVIEW OF CONTRACTOR'S REQUEST FOR PAYMENT. IF THE DRAWINGS ARE NOT COMPLETE, ACCURATE AND UP-TO DATE, THE DEVELOPER WILL NOT ACCEPT THE PAYMENT REQUEST. THE COMPLETED SET OF "RECORD" DRAWINGS MUST BE DELIVERED TO THE DEVELOPER BEFORE REQUESTING FINAL PAYMENT.

KFM ENGINEERING & DESIGN
621 N. MAIN STREET, SUITE 415
GRAPEVINE, TEXAS 76051
PHONE: (817) 416-4536
WWW.KFM-LLC.COM
TBPE #: F-20821

ISSUE:	DESCRIPTION:	DATE:
1	ISSUE FOR CONSTRUCTION	7/13/20

DELTA:	DESCRIPTION:	DATE:

CLIENT
CA LUCAS LLC

PROJECT
LOT 4 - WAL-MART LUCAS

SHEET TITLE
GENERAL CONSTRUCTION NOTES

STATE OF TEXAS
DAVID M. PITCHER
134245
LICENSED
PROFESSIONAL ENGINEER
7/13/2020

PROJECT NUMBER: 010011001

DRAWN BY: ALM
DESIGNED BY: DMP
CHECKED BY: JAM

DATE: 2020/07/13

SHEET: C0.03

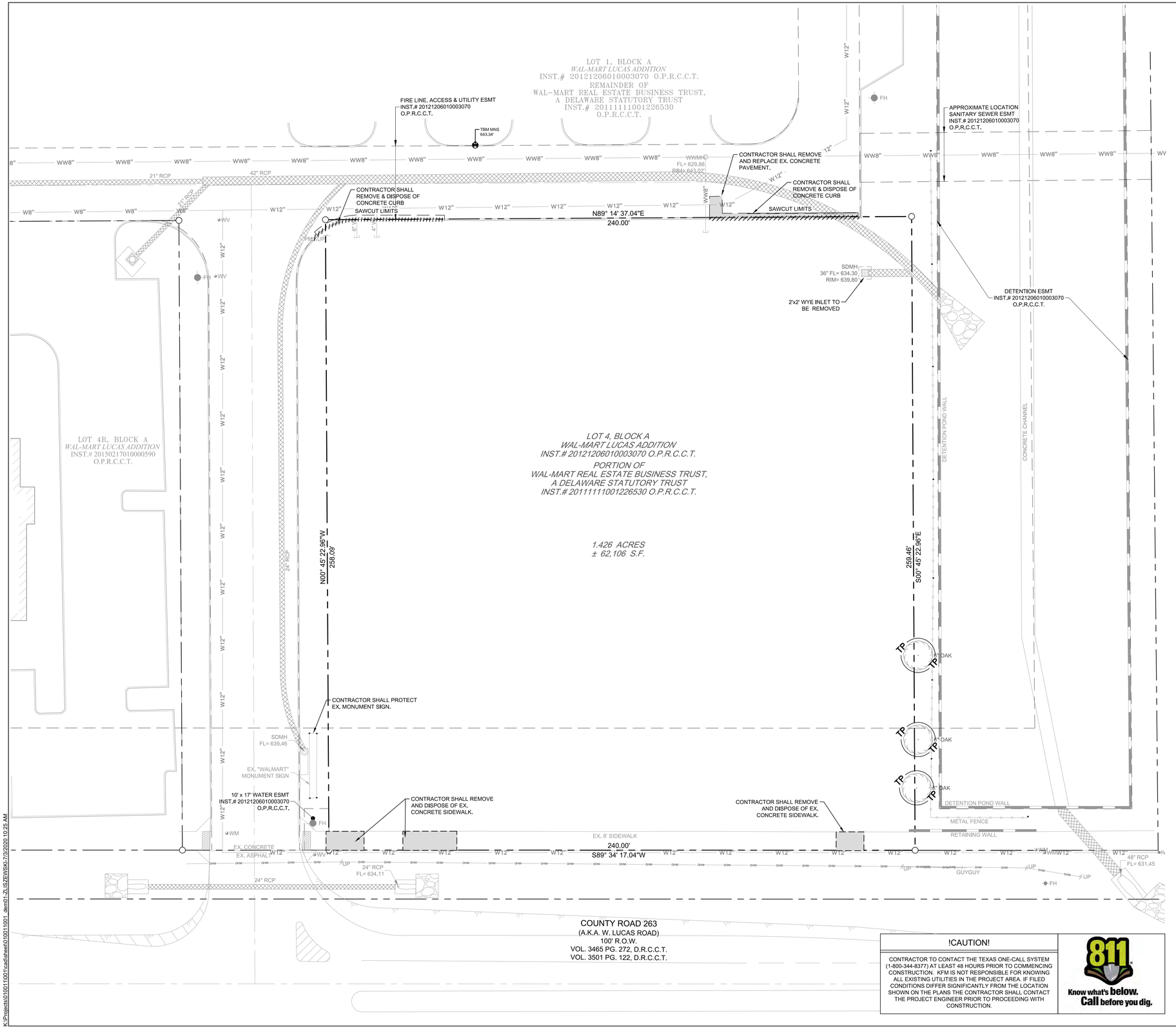

DEMOLITION LEGEND

- SAWCUT LIMITS
- TP — TREE PROTECTION
- EXISTING CURB AND GUTTER TO BE REMOVED
- EXISTING CONCRETE TO BE REMOVED

GENERAL DEMOLITION NOTES

1. **GENERAL CONSTRUCTION NOTES:** REFER TO SHEET C0.03 - GENERAL CONSTRUCTION NOTES FOR THE GENERAL CONSTRUCTION NOTES FOR THE PROJECT.
2. **INGRESS AND EGRESS:** THE CONTRACTOR SHALL MAINTAIN INGRESS AND EGRESS TO THE SITE AND ADJACENT PROPERTIES AT ALL TIMES AND CONDUCT HIS OPERATIONS WITH MINIMUM INTERFERENCE TO PUBLIC OR PRIVATE ACCESSES.
3. **PROTECTION OF EXISTING FACILITIES:** CONTRACTOR SHALL PROVIDE, ERECT, AND MAINTAIN TEMPORARY BARRIERS, FENCING, BRACING AND SHORING, AND SECURITY DEVICES TO PROTECT EXISTING STRUCTURES, UTILITIES, APPURTENANCES, TREES AND LANDSCAPING TO PREVENT MOVEMENT OR SETTLEMENT OF EXISTING STRUCTURE WHICH ARE NOT TO BE DEMOLISHED AND/OR REMOVED.
4. **HAZARDOUS AND/OR CONTAMINATED MATERIALS:** THE CONTRACTOR SHALL NOTIFY THE APPROPRIATE GOVERNING AUTHORITIES AND THE DEVELOPER IMMEDIATELY IF HAZARDOUS OR CONTAMINATED MATERIALS ARE DISCOVERED.
5. **STORAGE OF MATERIALS FOR RE-USE:** CONTRACTOR SHALL REMOVE AND STORE ON SITE (WHERE DESIGNATED BY THE DEVELOPER), ALL MATERIALS TO BE SALVAGED OR RE-INSTALLED LATER IN CONSTRUCTION.
6. **FRANCHISE UTILITY COORDINATION:** THE CONTRACTOR SHALL NOTIFY AND COORDINATE WITH ALL FRANCHISE UTILITY COMPANIES FOR THE REMOVAL AND/OR RELOCATION OF THE RESPECTIVE UTILITY LINES AND APPARATUSES USED BY EACH UTILITY. ALL WORK ASSOCIATED WITH FRANCHISE UTILITY REMOVAL, RELOCATION AND/OR MODIFICATIONS ARE TO BE PERFORMED ONLY BY THAT UTILITY PROVIDER UNLESS SPECIFICALLY NOTED OTHERWISE.
7. **TREE REMOVAL:** NO TREES SHALL BE CUT AND/OR REMOVED FROM THE PROJECT SITE UNTIL SPECIFICALLY AUTHORIZED IN WRITING BY THE GOVERNING AUTHORITY AND/OR DEVELOPER.
8. **SAW CUTTING OF EXISTING PAVEMENT:** SAW CUTTING, WHERE INDICATED ON THE DRAWINGS FOR REMOVAL OF EXISTING PAVEMENT, SHALL BE A FULL DEPTH CUT THAT IS NEAT AND TRUE IN ALIGNMENT.
9. **REMOVAL OF UTILITIES:** THE CONTRACTOR SHALL DISCONNECT, REMOVE AND/OR CAP ALL UTILITIES WHERE INDICATED ON THE DRAWINGS AND SHALL DOCUMENT THE LOCATION OF CAPPED UTILITIES AND SUBSURFACE OBSTRUCTIONS THAT ARE ENCOUNTERED.
10. **BUILDING/STRUCTURE REMOVAL:** DEMOLITION AND REMOVAL OF DESIGNATED BUILDINGS AND STRUCTURES SHALL INCLUDE, IN ADDITION TO ALL ABOVE GROUND MATERIALS, THE SLAB, FOUNDATION, AND PIERS. FOUNDATION AND PIERS SHALL BE REMOVED TO A DEPTH OF AT LEAST 5 FEET BELOW PROPOSED FINISHED GRADE, OR AT LEAST 2 FEET BELOW THE BOTTOM OF ANY PROPOSED IMPROVEMENTS IN THAT LOCATION, WHICHEVER IS GREATER.
11. **BACKFILLING:** THE CONTRACTOR SHALL BACKFILL ALL EXCAVATED AREAS CAUSED AS A RESULT OF DEMOLITION AND PROVIDE POSITIVE DRAINAGE TO PREVENT PONDING OF WATER.
12. **REMOVAL OF MATERIALS FROM SITE:** ALL MATERIALS TO BE REMOVED FROM THE SITE (INCLUDING BUT NOT LIMITED TO CONCRETE CURB AND PAVEMENT, ASPHALT PAVEMENT, BUILDING MATERIALS, EXCESS OR UNSUITABLE EARTHEN MATERIAL, UTILITY PIPING, TREES, BRUSH AND STUMPS, FENCING, ROCK, TRASH, REFUSE AND OTHER DEBRIS) SHALL BECOME TO PROPERTY OF THE CONTRACTOR AND SHALL BE DISPOSED OF OUTSIDE THE LIMITS OF THE PROJECT AT THE CONTRACTOR'S EXPENSE. THE CONTRACTOR SHALL COMPLY WITH ALL APPLICABLE LAWS GOVERNING SPILLAGE OF DEBRIS WHILE TRANSPORTING TO A DISPOSAL SITE.
13. **REPLACEMENT OF DAMAGED FACILITIES:** ALL STRUCTURES, UTILITIES, PAVEMENT, SIDEWALKS, WALLS, FENCES, ETC. NOT DESIGNATED TO BE REMOVED, BUT THAT ARE DAMAGED DURING CONSTRUCTION ACTIVITIES SHALL BE REPLACED TO A CONDITION AS GOOD AS OR BETTER THAN THE CONDITIONS PRIOR TO STARTING THE WORK SOLELY AT THE EXPENSE OF THE CONTRACTOR.

!CAUTION!

CONTRACTOR TO CONTACT THE TEXAS ONE-CALL SYSTEM (1-800-344-8377) AT LEAST 48 HOURS PRIOR TO COMMENCING CONSTRUCTION. KFM IS NOT RESPONSIBLE FOR KNOWING ALL EXISTING UTILITIES IN THE PROJECT AREA. IF FILED CONDITIONS DIFFER SIGNIFICANTLY FROM THE LOCATION SHOWN ON THE PLANS THE CONTRACTOR SHALL CONTACT THE PROJECT ENGINEER PRIOR TO PROCEEDING WITH CONSTRUCTION.

811 Know what's below. Call before you dig.

BENCHMARKS

1. **BM#1:** THE SITE BENCHMARK IS A MAG NAIL WITH METAL WASHER STAMPED "JPH LAND SURVEYING" SET IN A CONCRETE CURB LINE, LOCATED APPROXIMATELY 68 FEET NORTHEASTERLY FROM A "+" CUT IN CONCRETE FOUND AT THE NORTHWEST CORNER OF THE SURVEYED PROPERTY.

ELEVATION = 643.34' (NAVD'88)
VERTICAL DATUM:

KFM ENGINEERING & DESIGN
621 N. MAIN STREET, SUITE 415
GRAPEVINE, TEXAS 76051
PHONE: (817) 416-4536
WWW.KFM-LLC.COM
TBPE #: F-20821

ISSUE:	DESCRIPTION:	DATE:
1	ISSUE FOR CONSTRUCTION	7/13/20

CLIENT: CA LUCAS LLC

PROJECT: LOT 4 - WAL-MART LUCAS

SHEET TITLE: DEMOLITION PLAN

STATE OF TEXAS
DAVID M. PITCHER
134245
LICENSED
PROFESSIONAL ENGINEER
7/13/2020

PROJECT NUMBER: 010011001

DRAWN BY: ALM | DESIGNED BY: DMP | CHECKED BY: JAM

DATE: 2020/07/13

SHEET: C1.00

K:\Projects\010011001\cad\sheet\010011001_dem01-ZJLISZEN\KSKL-7/3/2020 10:25 AM

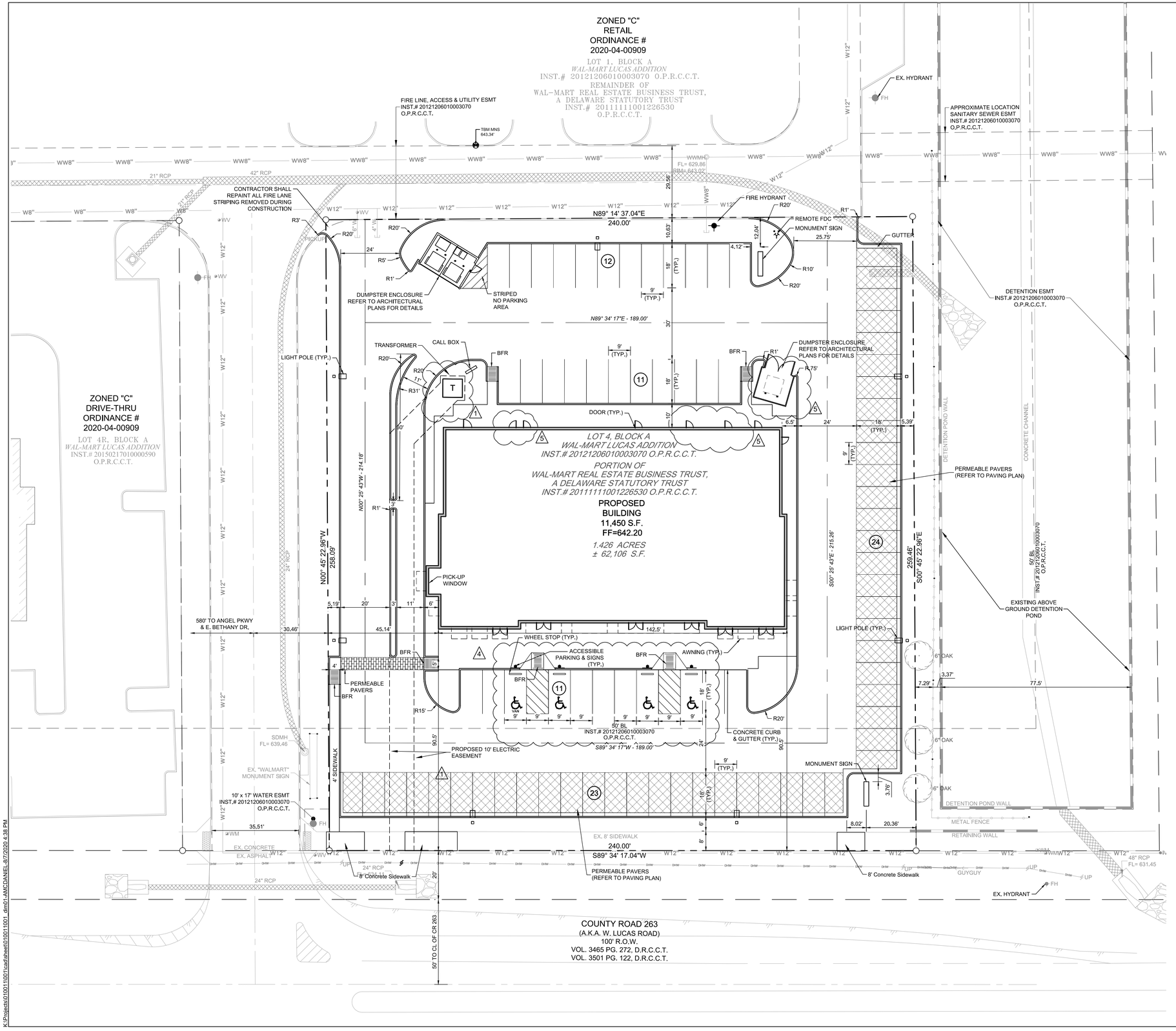

N

0 10 20 40

SCALE 1:20

LEGEND

- BARRIER FREE RAMP
- VAN ACCESSIBLE PARKING
- ACCESSIBLE PARKING
- SIGN
- LIGHT

SITE DATA SUMMARY TABLE

SITE AREA:	1.42 AC (62,106 S.F.)
BUILDING AREA:	11,450 S.F.
LOT COVERAGE:	.18%
BUILDING HEIGHT:	23' - 0" 1-STORY
BUILDING USE:	RESTAURANT, RETAIL & OFFICE
PARKING PROVIDED:	81 SPACES (4 ACCESSIBLE)
PARKING REQ'D:	78 SPACES (4 ACCESSIBLE) RESTAURANT 3,900 SF X 50% = 1,950 SF DINING AREA 1,9500 SF @ 15 SF PER OCCUPANT = 130 OCCUPANTS 130 OCCUPANTS @ 1:3 = 43 SPACES REQUIRED RETAIL 5,365 SF @ 1:200 = 27 SPACES REQUIRED OFFICE 2,118 SF @ 1:300 = 8 SPACES REQUIRED
ZONING:	"C" COMMERCIAL ORDINANCE # 2020-04-00909
IMPERVIOUS COVER	
PERVIOUS:	21,737 S.F. (35%)
IMPERVIOUS:	40,369 S.F. (65%)

DIMENSIONAL CONTROL NOTES

1. **GENERAL CONSTRUCTION NOTES:** REFER TO SHEET C0.03 "GENERAL CONSTRUCTION NOTES" FOR THE GENERAL CONSTRUCTION NOTES FOR THE PROJECT.
2. **SURVEYING:** ALL SURVEYING REQUIRED FOR CONSTRUCTION STAKING SHALL BE THE RESPONSIBILITY OF THE CONTRACTOR. THE DEVELOPER SHALL PROVIDE THE PROPERTY CORNERS AND TWO BENCHMARKS FOR USE AS HORIZONTAL AND VERTICAL DATUM. THE CONTRACTOR SHALL EMPLOY A REGISTERED PROFESSIONAL LAND SURVEYOR TO PERFORM ALL ADDITIONAL SURVEY, LAYOUT AND MEASUREMENT WORK NECESSARY FOR THE COMPLETION OF THE PROJECT.
3. **PROTECTION OF PROPERTY CORNERS AND BENCHMARKS:** THE CONTRACTOR SHALL PROTECT ALL PROPERTY CORNER MARKERS AND BENCHMARKS, AND WHEN ANY SUCH MARKERS OR MONUMENTS ARE IN DANGER OF BEING DISTURBED, THEY SHALL BE PROPERLY REFERENCED AND IF DISTURBED, SHALL BE RESET BY A REGISTERED PUBLIC SURVEYOR AT THE EXPENSE OF THE CONTRACTOR.
4. **DIMENSIONAL CONTROL:** ALL PAVING DIMENSIONS AND COORDINATES SHOWN ARE TO FACE OF CURB WHERE APPLICABLE. ALL DIMENSIONS SHOWN AT PL CURB POINTS ARE AT THE INTERSECTION OF THE FACE OF CURB.
5. **CURB RADII:** ALL CURB RADII SHALL BE 3 FEET TO FACE OF CURB UNLESS OTHERWISE NOTED.
6. **BUILDING DIMENSIONS:** CONTRACTOR SHALL REFER TO BUILDING PLANS FOR ACTUAL BUILDING DIMENSIONS. THE DIMENSIONS AND CORNERS SHOWN ARE TO FACE OF OUTSIDE WALLS OF BUILDING.
7. **TOPOGRAPHIC BOUNDARY SURVEY:** SURVEY INCLUDES PROPERTY LINE, LEGAL DESCRIPTION, EXISTING UTILITIES, SITE TOPOGRAPHY WITH SPOT ELEVATIONS, OUTSTANDING PHYSICAL FEATURES AND EXISTING STRUCTURE LOCATIONS WAS PROVIDED BY:

   JPH LAND SURVEYING
   785 LONESOME DOVE TRAIL
   HURST, TEXAS 76054
   CONTACT: JEWEL CHADD
   PHONE: (817) 431-4971
   EMAIL: JEWEL@JPHLS.COM
8. **HANDICAP PARKING:** HANDICAPPED PARKING AREAS SHALL BE CONSTRUCTED PER CITY STANDARDS AND SHALL COMPLY WITH REQUIREMENTS OF THE CURRENT, ADOPTED INTERNATIONAL BUILDING CODE.
9. **FIRE LANE:** FIRE LANES SHALL BE CONSTRUCTED AND MARKED PER CITY STANDARDS REFERENCE PAVING PLAN FOR DETAILS.
10. **SIGNS:** CONTRACTOR TO PROVIDE HANDICAPPED PARKING SIGNS AND POLES.

KFM ENGINEERING & DESIGN
621 N. MAIN STREET, SUITE 415
GRAPEVINE, TEXAS 76051
PHONE: (817) 416-4536
WWW.KFM-LLC.COM
TBPE #: F-20821

ISSUE:	DESCRIPTION:	DATE:
1	ISSUE FOR CONSTRUCTION	7/13/20

DELTA:	DESCRIPTION:	DATE:
1	TRANSFORMER ADDED	7/15/20
4	HANDICAP SPACES MOVED	8/5/20
5	DUMPSTER & DOORS	9/28/2020

CLIENT: CA LUCAS LLC

PROJECT: LOT 4 - WAL-MART LUCAS

SHEET TITLE: DIMENSIONAL CONTROL PLAN

STATE OF TEXAS
DAVID M. PITCHER
134245
LICENSED
PROFESSIONAL ENGINEER
7/13/2020

PROJECT NUMBER: 010011001

DRAWN BY: ALM | DESIGNED BY: DMP | CHECKED BY: JAM

DATE: 2020/07/13

SHEET: C2.00

K:\Projects\010011001\cad\sheet\010011001_dim01-AMCDANIEL-8/7/2020 4:38 PM

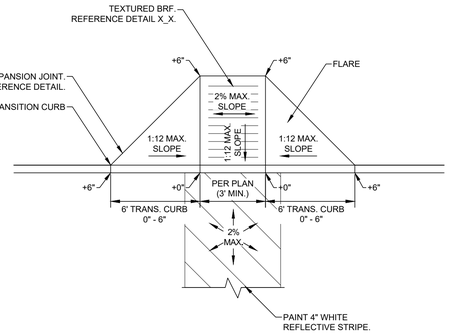

C2.01-01 FLARE BARRIER FREE RAMP

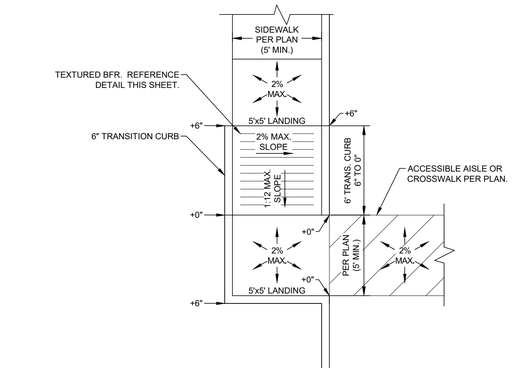

C2.01-02 ADJACENT BARRIER FREE RAMP

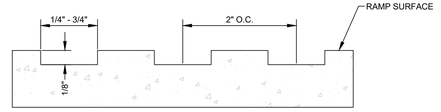

NOTES:
1. CONCRETE FOR ACCESSIBLE RAMPS SHALL BE COLOR CONDITIONED WITH A COLORING ADMIXTURE SPECIFICALLY FOR USE IN CONCRETE.
2. COLOR CONDITIONED VISUAL WARNING AREA COLOR TO BE COORDINATED WITH OWNER.

C2.01-03 RAMP TEXTURE DETAIL

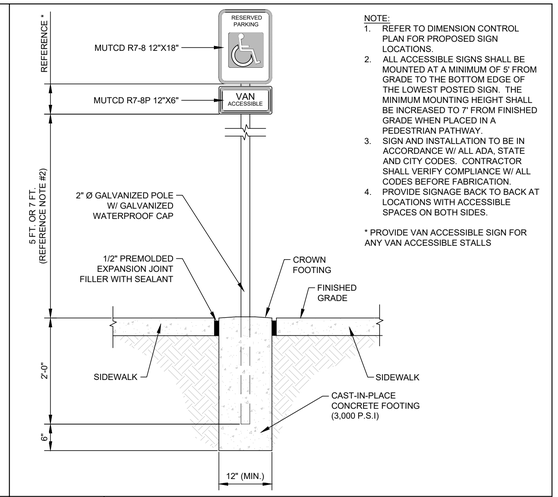

NOTE:
1. REFER TO DIMENSION CONTROL PLAN FOR PROPOSED SIGN LOCATIONS.
2. ALL ACCESSIBLE SIGNS SHALL BE MOUNTED AT A MINIMUM OF 5' FROM GRADE TO THE BOTTOM EDGE OF THE LOWEST POSTED SIGN. THE MINIMUM MOUNTING HEIGHT SHALL BE INCREASED TO 7' FROM FINISHED GRADE WHEN PLACED IN A PEDESTRIAN PATHWAY.
3. SIGN AND INSTALLATION TO BE IN ACCORDANCE W/ ALL ADA, STATE AND CITY CODES. CONTRACTOR SHALL VERIFY COMPLIANCE W/ ALL CODES BEFORE FABRICATION.
4. PROVIDE SIGNAGE BACK TO BACK AT LOCATIONS WITH ACCESSIBLE SPACES ON BOTH SIDES.

* PROVIDE VAN ACCESSIBLE SIGN FOR ANY VAN ACCESSIBLE STALLS

C2.01-04 ACCESSIBLE SIGN

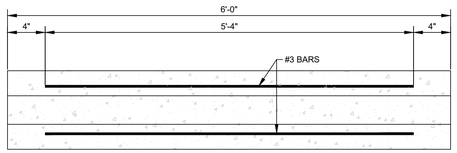

PLAN VIEW

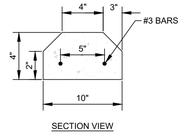

SECTION VIEW

C2.01-05 WHEEL STOP

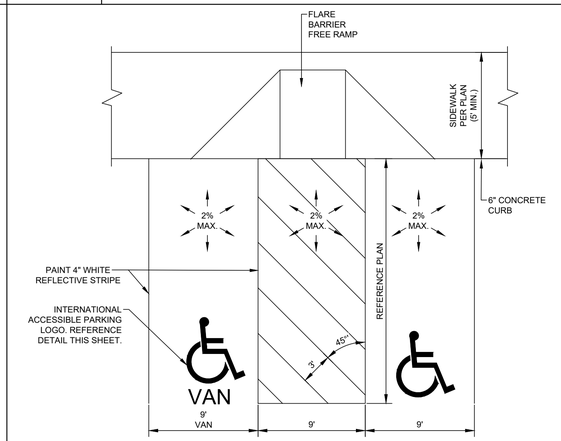

C2.01-06 ACCESSIBLE VAN PARKING STRIPING

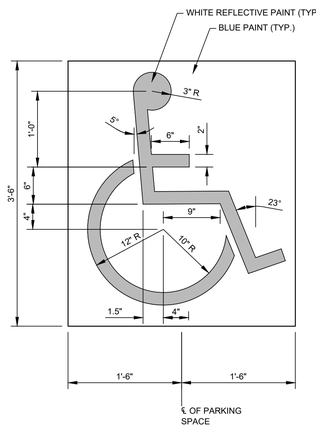

C2.01-07 ACCESSIBLE PARKING LOGO

C2.01-08

C2.01-09

C2.01-10

C2.01-11

C2.01-12

K:\Projects\010011001\leaf\sheet\010011001_spd01-AMCMILLIN-2/27/2020 1:45 PM

KFM ENGINEERING & DESIGN
621 N. MAIN STREET, SUITE 415
GRAPEVINE, TEXAS 76051
PHONE: (817) 416-4536
WWW.KFM-LLC.COM
TBPE #: F-20821

ISSUE:	DESCRIPTION:	DATE:
1	ISSUE FOR CONSTRUCTION	7/13/20

DELTA:	DESCRIPTION:	DATE:

CLIENT: CA LUCAS LLC

PROJECT: LOT 4 - WAL-MART LUCAS

SHEET TITLE: SITE PLAN DETAILS

STATE OF TEXAS
DAVID M. PITCHER
134245
LICENSED PROFESSIONAL ENGINEER
7/13/2020

PROJECT NUMBER: 010011001

DRAWN BY:	DESIGNED BY:	CHECKED BY:
ALM	DMP	JAM

DATE: 2020/07/13

SHEET: C2.01

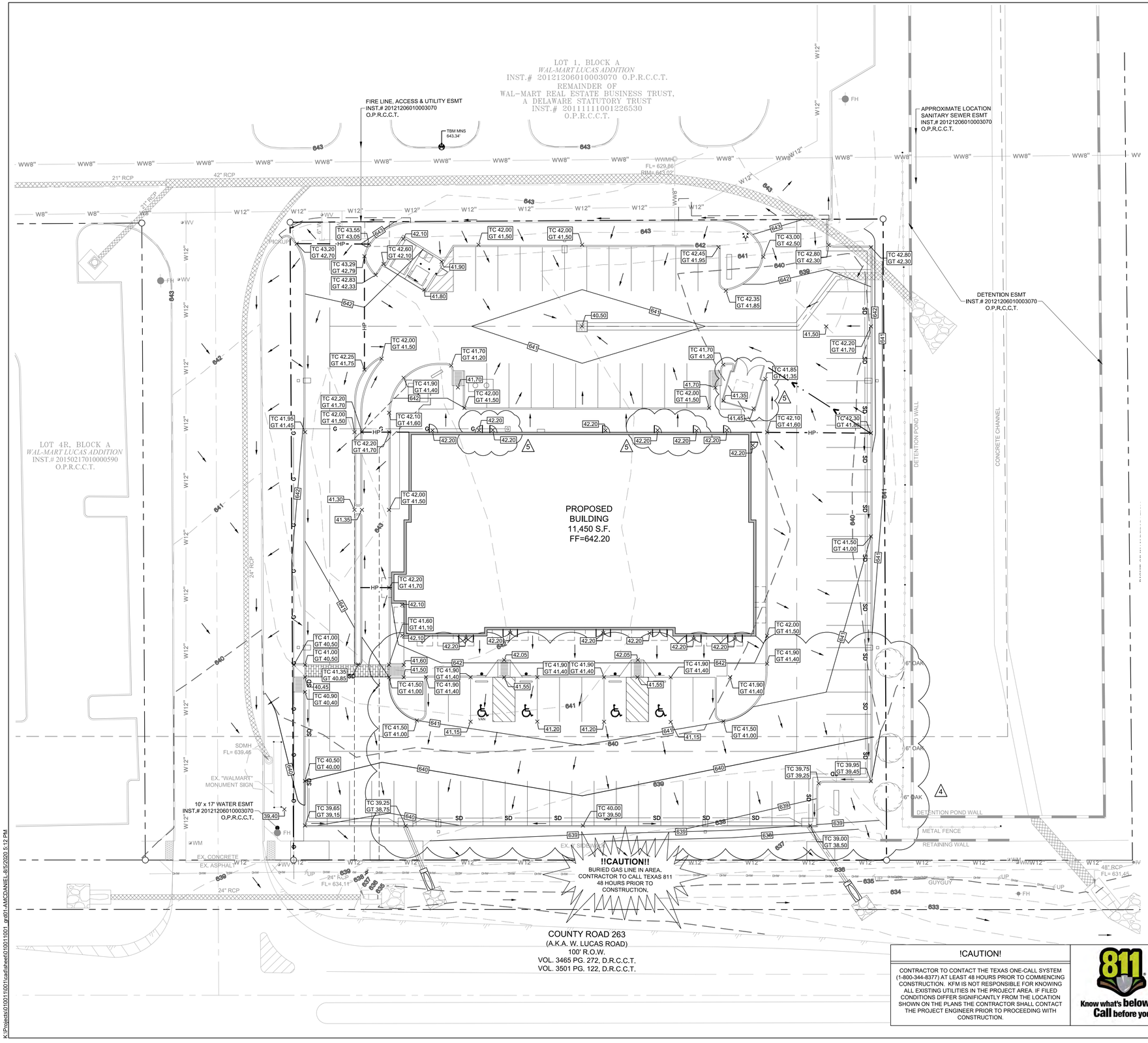

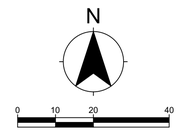

GRADING LEGEND

- PROPOSED MAJOR CONTOUR
- PROPOSED MINOR CONTOUR
- EXISTING MAJOR CONTOUR
- EXISTING MINOR CONTOUR
- SWALE
- RETAINING WALL
- HIGH POINT
- FLOW DIRECTION
- PROPOSED SPOT ELEVATION (TC11.11 / GT11.11)
- EXISTING SPOT ELEVATION (EX.11.11)
- GRATE INLET
- CURB INLET
- SLOPED HEADWALL

GRADING NOTES

1. **GENERAL CONSTRUCTION NOTES:** REFER TO SHEET C0.03 - GENERAL CONSTRUCTION NOTES FOR THE GENERAL CONSTRUCTION NOTES FOR THE PROJECT.
2. **UNDISTURBED AREAS:** PRIOR TO GRADING, BRUSH REMOVAL, OR SITE CONSTRUCTION, THE CONTRACTOR SHALL MEET WITH THE DEVELOPER AND/OR ENGINEER AT THE SITE TO ASCERTAIN THE AREAS OF THE PROJECT SITE THAT ARE TO BE PROTECTED AND PRESERVED. REFER TO THE "GENERAL TREE PROTECTION NOTES" FOR ALL CONSTRUCTION IN THE VICINITY OF EXISTING TREES.
3. **TESTING:** ALL EARTHWORK OPERATIONS SHALL BE OBSERVED AND TESTED ON A CONTINUING BASIS BY THE GEOTECHNICAL ENGINEER FOR CONFORMANCE WITH THE REQUIREMENTS SET FORTH IN THE GEOTECHNICAL STUDY PREPARED BY ALPHA TESTING, INC., G201275, DATED, 05-27-2020, WHICH IS MADE A PART OF THESE CONSTRUCTION DOCUMENTS.
4. **STRIPPING AND DEBRIS REMOVAL:** THE BUILDING PAD SITES, AREAS TO BE PAVED, AND ALL AREAS THAT ARE TO RECEIVE FILL MATERIAL SHALL BE STRIPPED OF VEGETATION, TREES, ROOTS, STUMPS, DEBRIS, AND OTHER ORGANIC MATERIAL. THE DEPTH OF STRIPPING IS ESTIMATED TO BE ON THE ORDER OF 6 INCHES IN ORDER TO REMOVE THE SURFACE SOIL CONTAINING ORGANIC MATERIAL. THE ACTUAL STRIPPING DEPTH SHALL BE BASED ON FIELD OBSERVATIONS. STRIPPED TOPSOIL SHALL BE STOCKPILED IN A LOCATION ON-SITE APPROVED BY THE DEVELOPER. ALL TREES, INCLUDING STUMPS AND ROOT SYSTEMS, VEGETATION, DEBRIS AND OTHER OBJECTIONABLE MATERIAL SHALL BE REMOVED AND DISPOSED OFF-SITE. THE CONTRACTOR SHALL COMPLY WITH ALL APPLICABLE LAWS GOVERNING SPILLAGE OF DEBRIS WHILE TRANSPORTING TO A DISPOSAL SITE. ALL COSTS ASSOCIATED WITH DISPOSAL OF MATERIAL SHALL BE INCLUDED IN THE CONTRACT AMOUNT.
5. **BURNING:** BURNING SHALL NOT BE PERMITTED ON THE PROJECT SITE UNLESS APPROVED IN WRITING BY THE GOVERNING AUTHORITIES AND THE DEVELOPER.
6. **PROOF ROLLING:** UPON COMPLETION OF STRIPPING OPERATIONS, AND PRIOR TO PLACEMENT OF ANY FILL MATERIALS, THE STRIPPED AREAS SHOULD BE OBSERVED TO DETERMINE IF ADDITIONAL EXCAVATION IS REQUIRED TO REMOVE WEAK OR OTHERWISE OBJECTIONABLE MATERIALS THAT WOULD ADVERSELY AFFECT THE FILL PLACEMENT. THE SUBGRADE SHOULD BE FIRM AND ABLE TO SUPPORT CONSTRUCTION EQUIPMENT WITHOUT DISPLACEMENT. SOFT OR YIELDING SUBGRADE SHOULD BE CORRECTED AND MADE STABLE BEFORE CONSTRUCTION PROCEEDS. PROOF ROLLING SHOULD BE PERFORMED USING A HEAVY PNEUMATIC TIRE ROLLER, LOADED DUMP TRUCK, OR SIMILAR PIECE OF EQUIPMENT WEIGHING 25 TONS. THE PROOF ROLLING OPERATIONS SHOULD BE OBSERVED BY THE GEOTECHNICAL ENGINEER OR HIS REPRESENTATIVE.
7. **UNSTABLE MATERIAL:** WHEN CLAY OR OTHER UNSTABLE MATERIAL IS PRESENT IN AREAS OF PROPOSED BUILDING PADS OR PAVED AREAS, THE GEOTECHNICAL ENGINEER SHALL OBSERVE THE STABILITY OF ANY EXISTING CLAY OR WEATHERED MATERIAL THAT IS PRESENT IN THE SUBBASE, AND SHALL DETERMINE WHETHER ADDITIONAL EXCAVATION OF THESE MATERIALS WILL BE REQUIRED. IF THIS MATERIAL IS DEEMED SUITABLE FOR SUBBASE MATERIAL, THE SUBGRADE SHALL BE SCARIFIED TO A DEPTH OF SIX INCHES, ITS MOISTURE CONTENT ADJUSTED AS RECOMMENDED BY THE GEOTECHNICAL ENGINEER, AND THEN RE-COMPACTED TO AT LEAST 95% OF THE OPTIMUM DENSITY DETERMINED BY THE STANDARD PROCTOR TEST, ASTM D - 698 PRIOR TO PLACEMENT OF FILL MATERIALS.
8. **CONTROLLED FILL:** ALL SOILS USED FOR CONTROLLED FILL SHOULD BE FREE OF ROOTS, VEGETATION, AND OTHER DELETERIOUS OR UNDESIRABLE MATTER. ROCKS LESS THAN 4 INCHES IN LARGEST DIMENSION WITHIN 15 INCHES OF PROPOSED SUBGRADE ELEVATION, LESS THAN 6 INCHES IN SIZE FROM 15 INCHES TO 36 INCHES OF PROPOSED SUBGRADE ELEVATION, LESS THAN 12 INCHES IN SIZE FROM 36 INCHES TO 72 INCHES OF PROPOSED SUB GRADE ELEVATION, AND LESS THAN 18 INCHES IN LARGEST DIMENSION FOR FILLS IN EXCESS OF 72 INCHES FROM SUBGRADE ELEVATION, WILL BE ALLOWED AS ACCEPTABLE FILL MATERIAL. ROCK FILLS SHOULD BE SUPPLEMENTED WITH A SUFFICIENT AMOUNT OF FINE MATERIAL TO PREVENT VOIDS. SOILS IMPORTED FROM OFF-SITE FOR USE AS FILL SHOULD BE APPROVED BY THE GEOTECHNICAL ENGINEER. THE FILL MATERIAL SHOULD BE PLACED IN LEVEL, UNIFORM LIFTS, WITH EACH LIFT COMPACTED TO THE MINIMUM DRY DENSITY WITHIN THE COMPACTION SOIL MOISTURE RANGES RECOMMENDED. THE LOOSE LIFT THICKNESS SHOULD NOT EXCEED 8 INCHES. EACH LAYER SHOULD BE PROPERLY PLACED, MIXED, SPREAD, AND COMPACTED TO BETWEEN 95% AND 100% OF STANDARD PROCTOR DENSITY AS DETERMINED BY ASTM D 698.
9. **PROPOSED GRADES:** THE PROPOSED CONTOURS INDICATED ON THE GRADING PLAN ARE FINISHED GRADES AND ARE SHOWN AT ONE-FOOT INTERVALS. SPOT ELEVATIONS SHOWN IN PAVED AREAS ARE TOP OF PAVEMENT, UNLESS NOTED OTHERWISE.
10. **BUILDING ENTRANCE GRADES:** REFER TO THE BUILDING PLANS FOR DETAILED SPOT GRADING AT THE BUILDING ENTRANCE AREAS. THE CONTRACTOR SHALL COMPLY WITH ALL ADA AND LOCAL STATE GOVERNING AUTHORITY STANDARDS FOR REQUIREMENTS REGARDING MAXIMUM SLOPES FOR HANDICAP PARKING AREAS, SIDEWALKS, ACCESS RAMPS AND ACCESSIBLE ROUTES.
11. **LANDSCAPE AREAS:** ALL LANDSCAPE AREAS AND OTHER DISTURBED AREAS WITHIN THE LIMITS OF THE PROPERTY NOT DESIGNATED TO BE PAVED SHALL RECEIVE 6 INCHES OF TOPSOIL. REFER TO THE EROSION AND SEDIMENT CONTROL PLANS AND/OR LANDSCAPE PLANS FOR LIMITS OF TOPSOIL PLACEMENT.
12. **UNCLASSIFIED EXCAVATION:** ALL UNCLASSIFIED EXCAVATION, INCLUDING, BUT NOT LIMITED TO, CUT & FILL, HAUL IN, HAUL OFF ASSOCIATED WITH CONSTRUCTION OF PAVEMENT TO FINAL GRADE SHALL BE THE RESPONSIBILITY OF THE CONTRACTOR.

!CAUTION!

CONTRACTOR TO CONTACT THE TEXAS ONE-CALL SYSTEM (1-800-344-8377) AT LEAST 48 HOURS PRIOR TO COMMENCING CONSTRUCTION. KFM IS NOT RESPONSIBLE FOR KNOWING ALL EXISTING UTILITIES IN THE PROJECT AREA. IF FILED CONDITIONS DIFFER SIGNIFICANTLY FROM THE LOCATION SHOWN ON THE PLANS THE CONTRACTOR SHALL CONTACT THE PROJECT ENGINEER PRIOR TO PROCEEDING WITH CONSTRUCTION.

811 Know what's below. Call before you dig.

BENCHMARKS

1. **BM#1:** THE SITE BENCHMARK IS A MAG NAIL WITH METAL WASHER STAMPED "JPH LAND SURVEYING" SET IN A CONCRETE CURB LINE, LOCATED APPROXIMATELY 68 FEET NORTHEASTERLY FROM A "+" CUT IN CONCRETE FOUND AT THE NORTHWEST CORNER OF THE SURVEYED PROPERTY.

ELEVATION = 643.34' (NAVD'88)
VERTICAL DATUM:

KFM ENGINEERING & DESIGN
621 N. MAIN STREET, SUITE 415
GRAPEVINE, TEXAS 76051
PHONE: (817) 416-4536
WWW.KFM-LLC.COM
TBPE #: F-20821

ISSUE:	DESCRIPTION:	DATE:
1	ISSUE FOR CONSTRUCTION	7/13/20

DELTA:	DESCRIPTION:	DATE:
4	HANDICAP SPACES MOVED	8/5/2020
5	DUMPSTER & DOORS	09/28/2020

CLIENT: CA LUCAS LLC

PROJECT: LOT 4 - WAL-MART LUCAS

SHEET TITLE: GRADING PLAN

STATE OF TEXAS
DAVID M. PITCHER
134245
LICENSED
PROFESSIONAL ENGINEER
7/13/2020

PROJECT NUMBER: 010011001

DRAWN BY:	DESIGNED BY:	CHECKED BY:
ALM	DMP	JAM

DATE: 2020/07/13

SHEET: C3.00

K:\Projects\010011001\cad\sheet\010011001_grd01-LAMCDANIEL-8/5/2020 5:12 PM

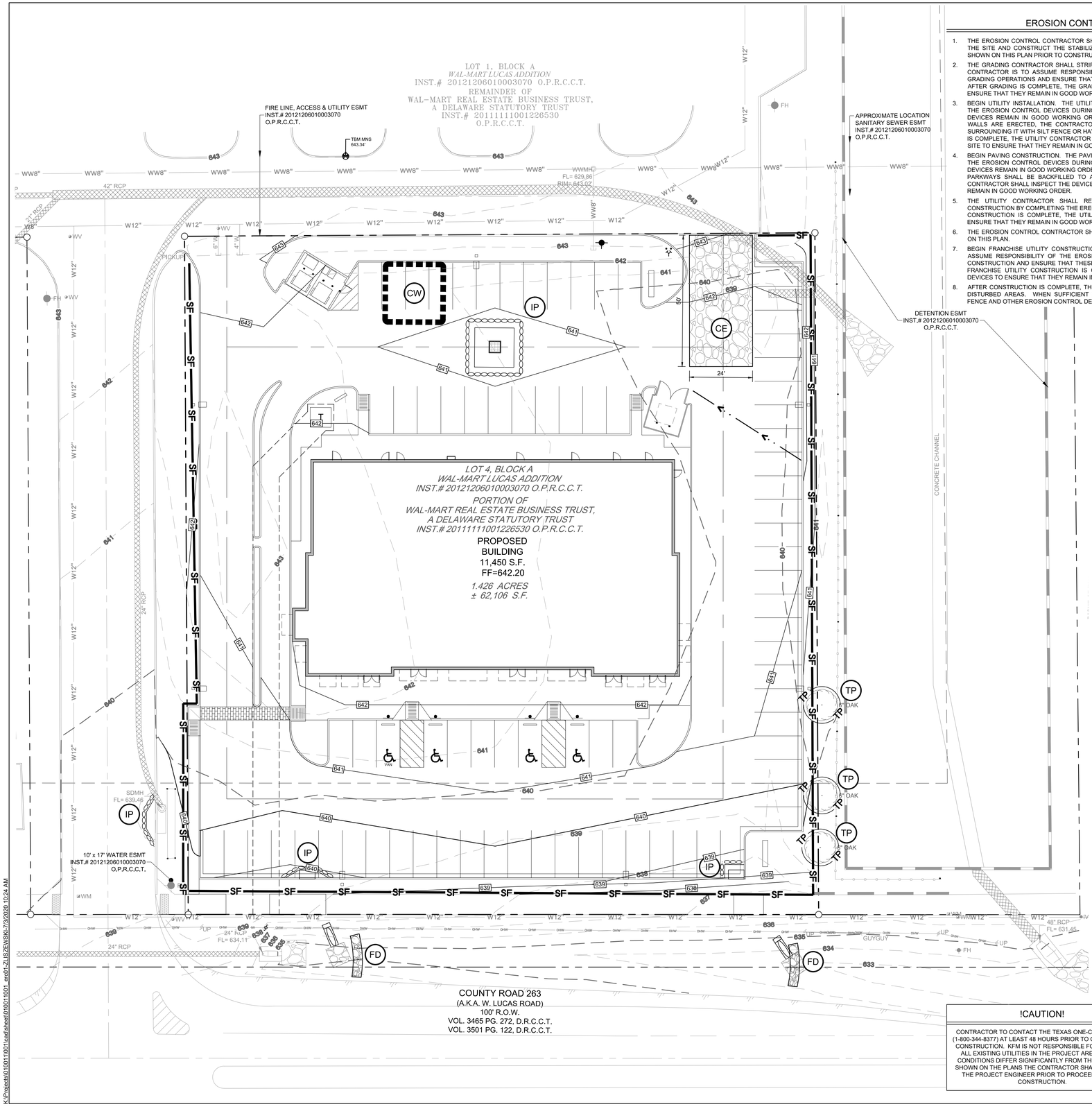

EROSION CONTROL SEQUENCING

1. THE EROSION CONTROL CONTRACTOR SHALL INSTALL SILT FENCE ALONG THE PERIMETER OF THE SITE AND CONSTRUCT THE STABILIZED CONSTRUCTION ENTRANCES AT THE LOCATIONS SHOWN ON THIS PLAN PRIOR TO CONSTRUCTION.
2. THE GRADING CONTRACTOR SHALL STRIP, CLEAR AND MASS GRADE THE SITE. THE GRADING CONTRACTOR IS TO ASSUME RESPONSIBILITY OF THE EROSION CONTROL DEVICES DURING GRADING OPERATIONS AND ENSURE THAT THESE DEVICES REMAIN IN GOOD WORKING ORDER. AFTER GRADING IS COMPLETE, THE GRADING CONTRACTOR SHALL INSPECT THE DEVICES TO ENSURE THAT THEY REMAIN IN GOOD WORKING ORDER.
3. BEGIN UTILITY INSTALLATION. THE UTILITY CONTRACTOR SHALL ASSUME RESPONSIBILITY OF THE EROSION CONTROL DEVICES DURING UTILITY CONSTRUCTION AND ENSURE THAT THESE DEVICES REMAIN IN GOOD WORKING ORDER. AFTER THE STORM DRAIN INLET INVERT AND WALLS ARE ERECTED, THE CONTRACTOR SHALL PROTECT THE INLET FROM SILTATION BY SURROUNDING IT WITH SILT FENCE OR HAY BALES. AFTER THIS PHASE OF UTILITY INSTALLATION IS COMPLETE, THE UTILITY CONTRACTOR SHALL INSPECT THE DEVICES PRIOR TO MOVING OFF SITE TO ENSURE THAT THEY REMAIN IN GOOD WORKING ORDER.
4. BEGIN PAVING CONSTRUCTION. THE PAVING CONTRACTOR SHALL ASSUME RESPONSIBILITY OF THE EROSION CONTROL DEVICES DURING PAVING CONSTRUCTION AND ENSURE THAT THESE DEVICES REMAIN IN GOOD WORKING ORDER. AFTER PAVING CONSTRUCTION IS COMPLETE, THE PARKWAYS SHALL BE BACKFILLED TO A FINISHED SLOPE OF 1/4" PER FOOT. THE PAVING CONTRACTOR SHALL INSPECT THE DEVICES PRIOR TO MOVING OFF SITE TO ENSURE THAT THEY REMAIN IN GOOD WORKING ORDER.
5. THE UTILITY CONTRACTOR SHALL REMOBILIZE AND FINISH THE STORM DRAIN INLET CONSTRUCTION BY COMPLETING THE ERECTION OF THE WALLS AND TOP. AFTER PUBLIC UTILITY CONSTRUCTION IS COMPLETE, THE UTILITY CONTRACTOR SHALL INSPECT THE DEVICES TO ENSURE THAT THEY REMAIN IN GOOD WORKING ORDER.
6. THE EROSION CONTROL CONTRACTOR SHALL INSTALL THE CURB INLET PROTECTION DETAILED ON THIS PLAN.
7. BEGIN FRANCHISE UTILITY CONSTRUCTION. EACH FRANCHISE UTILITY CONTRACTOR SHALL ASSUME RESPONSIBILITY OF THE EROSION CONTROL DEVICES DURING FRANCHISE UTILITY CONSTRUCTION AND ENSURE THAT THESE DEVICES REMAIN IN GOOD WORKING ORDER. AFTER FRANCHISE UTILITY CONSTRUCTION IS COMPLETE, THE CONTRACTOR SHALL INSPECT THE DEVICES TO ENSURE THAT THEY REMAIN IN GOOD WORKING ORDER.
8. AFTER CONSTRUCTION IS COMPLETE, THE EROSION CONTROL CONTRACTOR SHALL SEED ALL DISTURBED AREAS. WHEN SUFFICIENT GRASS GROWTH HAS BEEN ESTABLISHED, ALL SILT FENCE AND OTHER EROSION CONTROL DEVICES SHALL BE REMOVED FROM THE SITE.

N

0 10 20 40

SCALE 1:20

EROSION CONTROL LEGEND

- PROPOSED MAJOR CONTOUR
- PROPOSED MINOR CONTOUR
- EXISTING MAJOR CONTOUR
- EXISTING MINOR CONTOUR
- TREE PROTECTION
- SILT FENCE
- FLOW DIRECTION
- INLET PROTECTION
- CONCRETE WASHOUT PIT
- ROCK FILTER DAM
- STABILIZED CONSTRUCTION ENTRANCE

EROSION CONTROL NOTES

1. **GENERAL CONSTRUCTION NOTES:** REFER TO SHEET C0.03 - GENERAL CONSTRUCTION NOTES FOR THE GENERAL CONSTRUCTION NOTES FOR THE PROJECT.
2. **INGRESS AND EGRESS:** THE CONTRACTOR SHALL MAINTAIN INGRESS AND EGRESS TO THE SITE AND ADJACENT PROPERTIES AT ALL TIMES AND CONDUCT HIS OPERATIONS WITH MINIMUM INTERFERENCE TO PUBLIC OR PRIVATE ACCESSES.
3. **PROTECTION OF EXISTING FACILITIES:** CONTRACTOR SHALL PROVIDE, ERECT, AND MAINTAIN TEMPORARY BARRIERS, FENCING, BRACING AND SHORING, AND SECURITY DEVICES TO PROTECT EXISTING STRUCTURES, UTILITIES, APPURTENANCES, TREES AND LANDSCAPING, AND TO PREVENT MOVEMENT OR SETTLEMENT OF EXISTING STRUCTURES WHICH ARE NOT TO BE DEMOLISHED AND/OR REMOVED.
4. **HAZARDOUS AND/OR CONTAMINATED MATERIALS:** THE CONTRACTOR SHALL NOTIFY THE APPROPRIATE GOVERNING AUTHORITIES AND OWNER IMMEDIATELY IF HAZARDOUS OR CONTAMINATED MATERIALS ARE DISCOVERED.
5. **SWPPP COMPLIANCE:** THE CONTRACTOR SHALL BE REQUIRED TO COMPLY WITH THE CONDITIONS OF THE STORM WATER POLLUTION PREVENTION PLAN (SWPPP) WHILE CONDUCTING HIS ACTIVITIES ON THIS PROJECT. IN ADDITION TO CONSTRUCTING THOSE ITEMS INDICATED ON THE PLAN SHEETS, COMPLIANCE WITH THE SWPPP INCLUDES CONFORMANCE TO CERTAIN PRACTICES AND PROCEDURES IDENTIFIED IN THE SWPPP DURING PROJECT CONSTRUCTION. THE SWPPP PLANS AND DOCUMENTS ARE PROVIDED FOR THE SOLE BENEFIT OF THE CONTRACTOR AS A PLANNING TOOL FOR COMPLYING WITH THE ENVIRONMENTAL REGULATIONS OF THIS PROJECT.
6. **BMP INSTALLATION:** PRIOR TO COMMENCING GRADING OPERATIONS, THE CONTRACTOR SHALL INSTALL ALL SWPPP MEASURES AND DEVICES AS INDICATED ON THE EROSION & SEDIMENT CONTROL PLAN. ALL SWPPP "BEST MANAGEMENT PRACTICES" (BMP) CONTROL MEASURES AND DEVICES SHALL BE IN ACCORDANCE THE CONTROLLING FEDERAL, STATE, OR LOCAL SPECIFICATIONS AND DETAILS, OR AS MODIFIED BY THE CONTRACT DOCUMENTS.
7. **CLEANING, REPAIR AND MAINTENANCE:** THE CONTRACTOR SHALL REFER TO THE SWPPP FOR SEQUENCING OF CONSTRUCTION, INSTALLATION OF NEW EROSION CONTROL DEVICES AND CLEANING, REPAIR AND MAINTENANCE OF EXISTING EROSION CONTROL DEVICES. THE CONTRACTOR SHALL REVISE, RELOCATE AND/OR ADD DEVICES TO REFLECT ACTUAL SITE CONDITIONS AND TO ACCOMMODATE LOCATIONS FOR CONSTRUCTION TRAILER AREAS, STORAGE AREAS, FUELING AREAS, TOILETS, TRASH RECEPTACLES AND WASHOUT AREAS. ANY ACCIDENTAL RELEASE OF SEDIMENT OR POLLUTANTS FROM THE SITE SHALL BE CLEANED BY THE CONTRACTOR.
8. **SITE ENTRY/EXIT LOCATIONS:** SITE ENTRY AND EXIT LOCATIONS SHALL BE MAINTAINED BY THE CONTRACTOR IN A CONDITION THAT WILL PREVENT TRACKING OR FLOWING OF SEDIMENT ONTO PUBLIC ROADWAYS. ALL SEDIMENT SPILLED, DROPPED, WASHED OR TRACKED ONTO PUBLIC ROADWAYS MUST BE REMOVED IMMEDIATELY. WHEN WASHING OF VEHICLES IS REQUIRED TO REMOVE SEDIMENT PRIOR TO ENTRANCE TO A PUBLIC ROADWAY, IT SHALL BE DONE ON AN AREA STABILIZED WITH CRUSHED STONE WHICH DRAINS INTO AN APPROVED SEDIMENT BASIN. ALL FINES IMPOSED FOR TRACKING ONTO PUBLIC ROADS SHALL BE PAID BY THE CONTRACTOR.
9. **PROTECTION OF ADJACENT PROPERTY:** CONTRACTOR SHALL ASSUME FULL LIABILITY FOR DAMAGE TO ADJACENT PROPERTIES AND/OR PUBLIC RIGHT-OF-WAY RESULTING FROM FAILURE TO FULLY IMPLEMENT AND EXECUTE ALL EROSION CONTROL METHODS AND PROCEDURES SHOWN AND NOTED IN THE PLANS AND SWPPP.
10. **RE-VEGETATION:** AT THE COMPLETION OF PAVING AND FINAL GRADING OPERATIONS, ALL DISTURBED AREAS SHALL BE VEGETATED IN ACCORDANCE WITH THE LANDSCAPE ARCHITECTS' PLANS. IN AREAS NOT COVERED BY LANDSCAPE PLAN, THE CONTRACTOR SHALL PROVIDE HYDROMULCH SEEDING AND/OR SODDING FOR ALL DISTURBED AREAS (NOT DESIGNATED TO BE PAVED) IN ACCORDANCE WITH ALL GOVERNING AUTHORITIES' SPECIFICATIONS.
11. **BMP REMOVAL:** THE CONTRACTOR SHALL REMOVE AND DISPOSE OF ALL SEDIMENT BARRIERS AND INLET PROTECTION AFTER VEGETATION HAS BEEN COMPLETED AND ALL AREAS OF THE SITE HAVE BEEN STABILIZED AND ACCEPTED BY THE GOVERNING AUTHORITIES AND THE DEVELOPER.

NOTES:
REFERENCE SHEET C3.02 FOR DETAILS

!CAUTION!

CONTRACTOR TO CONTACT THE TEXAS ONE-CALL SYSTEM (1-800-344-8377) AT LEAST 48 HOURS PRIOR TO COMMENCING CONSTRUCTION. KFM IS NOT RESPONSIBLE FOR KNOWING ALL EXISTING UTILITIES IN THE PROJECT AREA. IF FILED CONDITIONS DIFFER SIGNIFICANTLY FROM THE LOCATION SHOWN ON THE PLANS THE CONTRACTOR SHALL CONTACT THE PROJECT ENGINEER PRIOR TO PROCEEDING WITH CONSTRUCTION.

811 Know what's below. Call before you dig.

BENCHMARKS

1. **BM#1:** THE SITE BENCHMARK IS A MAG NAIL WITH METAL WASHER STAMPED "JPH LAND SURVEYING" SET IN A CONCRETE CURB LINE, LOCATED APPROXIMATELY 68 FEET NORTHEASTERLY FROM A "+" CUT IN CONCRETE FOUND AT THE NORTHWEST CORNER OF THE SURVEYED PROPERTY.

ELEVATION = 643.34' (NAVD'88)
VERTICAL DATUM:

KFM ENGINEERING & DESIGN
621 N. MAIN STREET, SUITE 415
GRAPEVINE, TEXAS 76051
PHONE: (817) 416-4536
WWW.KFM-LLC.COM
TBPE #: F-20821

ISSUE:	DESCRIPTION:	DATE:
1	ISSUE FOR CONSTRUCTION	7/13/20

DELTA:	DESCRIPTION:	DATE:
2	CE AND SAWCUT EDITS	7/3/2020

CLIENT: CA LUCAS LLC

PROJECT: LOT 4 - WAL-MART LUCAS

SHEET TITLE: EROSION CONTROL PLAN

STATE OF TEXAS
DAVID M. PITCHER
134245
LICENSED
PROFESSIONAL ENGINEER
7/13/2020

PROJECT NUMBER: 010011001

DRAWN BY: ALM | DESIGNED BY: DMP | CHECKED BY: JAM

DATE: 2020/07/13

SHEET:

C3.01

K:\Projects\010011001\cad\sheet\010011001_ero01-ZLISZEWSKI-7/3/2020 10:24 AM

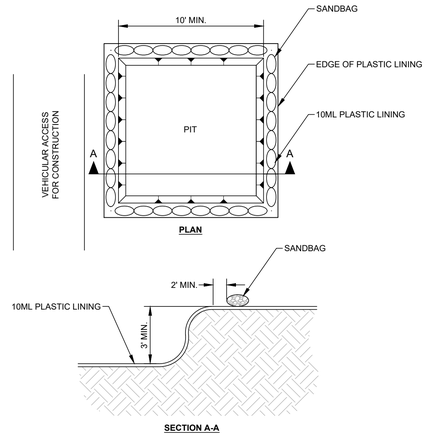

NOTE:
1. DETAIL ILLUSTRATES MINIMUM DIMENSIONS. PIT CAN BE INCREASED IN SIZE DEPENDING ON EXPECTED FREQUENCY OF USE.
2. WASHOUT PIT SHALL BE LOCATED IN AN AREA EASILY ACCESSIBLE TO CONSTRUCTION TRAFFIC.
3. WASHOUT PIT SHALL NOT BE LOCATED IN AREAS SUBJECT TO INUNDATION FROM STORM WATER RUNOFF.
4. PIT SHALL BE INSTALLED WITH IMPERMEABLE LINER PER TCEQ REQUIREMENTS.
5. SANDBAGS MAY BE REPLACED BY SOIL BERM TO ANCHOR THE PLASTIC LINING.

C3.02-01 CONCRETE WASHOUT PIT

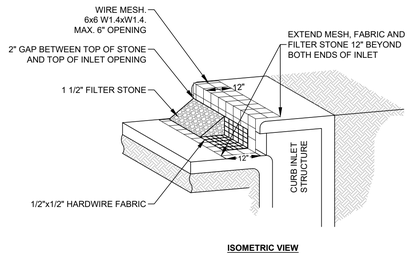

NOTE:
1. MATERIAL SPECIFICATION:
   A. CONCRETE BLOCK-ASTM C 139, CONCRETE MASONRY UNIT FOR CONSTRUCTION
   B. WIRE FABRIC-STANDARD GALVANIZED HARDWARE FABRIC WITH 1/2" BY 1/2" OPENINGS
   C. FILTER STONE-NCTCOG SPECIFICATION 2.1.8.(E).
   D. WIRE MESH-WELDED WIRE FABRIC CONFORMING TO NCTCOG SPECIFICATION 2.2.7 MAXIMUM OPENING 6"X6"
2. MAINTENANCE REQUIREMENTS-CURB INLET PROTECTION SHOULD BE INSPECTED WEEKLY AND AFTER MAJOR RAIN EVENTS TO ENSURE THAT THE DEVICE IS FUNCTIONING PROPERLY, REMOVE SEDIMENT FROM THE STORAGE AREA WHEN THE DEPTH OF SEDIMENT HAS BUILT UP TO ONE-HALF OF THE STORAGE DEPTH. IF DE-WATERING OF THE STORAGE VOLUME IS NOT OCCURRING, CLEAN OR REPLACE THE FILTER STONE, CLEAN THE FILTER STONE SURFACE THE FIRST FEW TIMES BY RAKING, REPEATED SEDIMENT BUILD-UP WILL REQUIRE FILTER STONE REPLACEMENT.
3. DO NOT USE A SEDIMENT FILTER TO CONTROL EROSION AROUND "Y" INLETS, UTILIZE SEDIMENT FENCES.

C3.02-02 CURB INLET PROTECTION

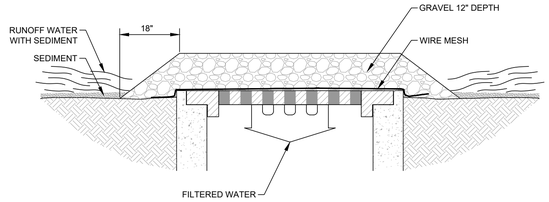

NOTE:
1. WIRE MESH SHALL BE LAID OVER THE DROP INLET SO THAT THE WIRE EXTENDS MINIMUM OF 1 FOOT BEYOND EACH SIDE OF THE INLET STRUCTURE. HARDWARE CLOTH OR COMPARABLE WIRE MESH WITH 1/2-INCH OPENINGS SHALL BE USED. IF MORE THAN ONE STRIP OF MESH IS NECESSARY, THE STRIPS SHALL BE OVERLAPPED.
2. AGGREGATE SHALL BE PLACED OVER THE WIRE MESH AS INDICATED ABOVE. THE DEPTH OF STONE SHALL BE AT LEAST 12 INCHES OVER THE ENTIRE INLET OPENING. THE STONE SHALL EXTEND BEYOND THE INLET OPENING AT LEAST 18 INCHES ON ALL SIDES.
3. IF THE STONE FILTER BECOMES CLOGGED WITH SEDIMENT SO THAT IT NO LONGER ADEQUATELY PERFORMS IT'S FUNCTION, THE STONES MUST BE PULLED AWAY FROM THE INLET, CLEANED AND REPLACED.

C3.02-03 GRATE INLET PROTECTION

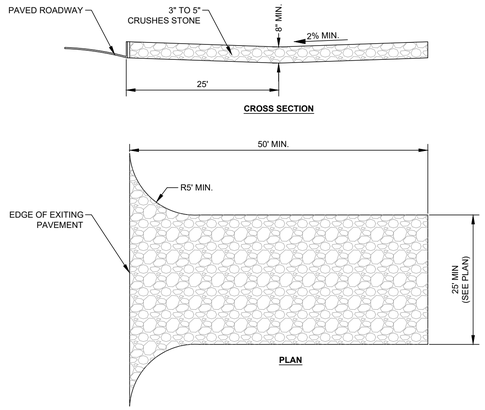

NOTE:
1. STONE SIZE: 6 TO 8 INCH OPEN GRADED ROCK, 12 TO 14 INCHES DEEP.
2. LENGTH: AS EFFECTIVE, BUT NOT LESS THAN 50 FEET.
3. THICKNESS: NOT LESS THAN 8 INCHES.
4. WIDTH: NOT LESS THAN FULL WIDTH OF ALL POINTS OF INGRESS OR EGRESS.
5. WASHING: WHEN NECESSARY, WHEELS SHALL BE CLEANED TO REMOVE SEDIMENT PRIOR TO ENTRANCE ONTO PUBLIC ROADWAY. WHEN WASHING IS REQUIRED, IT SHALL BE DONE ON AN AREA STABILIZED WITH CRUSHED STONE WHICH DRAINS INTO AN APPROVED STRAP OR SEDIMENT BASIN. ALL SEDIMENT SHALL BE PREVENTED FROM ENTERING ANY STORM DRAIN, DITCH, OR WATERCOURSE USING APPROVED METHODS.
6. MAINTENANCE- THE ENTRANCE SHALL BE MAINTAINED IN A CONDITION WHICH WILL PREVENT TRACKING OR FLOWING OF SEDIMENT ONTO PUBLIC ROADWAYS. THIS MAY REQUIRE PERIODIC TOP DRESSING WITH ADDITIONAL STONE AS CONDITIONS DEMAND, AND REPAIR AND/OR CLEANOUT OF ANY MEASURES USED TO TRAP SEDIMENT. ALL SEDIMENT SPILLED, DROPPED, WASHED OR TRACKED ONTO PUBLIC ROADWAY MUST BE REMOVED IMMEDIATELY.
7. DRAINAGE- ENTRANCE MUST BE PROPERLY GRADED OR INCORPORATE A DRAINAGE SWALE TO PREVENT RUNOFF FROM LEAVING THE CONSTRUCTION SITE.

C3.02-04 STABILIZED CONSTRUCTION ENTRANCE

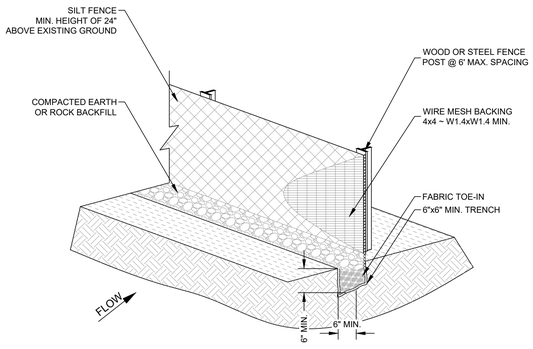

NOTE:
1. WOOD OR STEEL POSTS WHICH SUPPORT THE SILT FENCE SHALL BE INSTALLED ON A SLIGHT ANGLE TOWARD THE ANTICIPATED RUNOFF SOURCE. POST MUST BE EMBEDDED A MINIMUM OF ONE FOOT.
2. THE TOE OF THE SILT FENCE SHALL BE TRENCHED IN WITH A SPADE OR MECHANICAL TRENCHER, SO THAT THE DOWNSLOPE FACE OF THE TRENCH IS FLAT AND PERPENDICULAR TO THE LINE OF FLOW. WHERE FENCE CAN NOT BE TREATED IN (E.G. PAVEMENT) WEIGHT FABRIC FLAP WITH WASHED GRAVEL ON UPHILL SIDE TO PREVENT FLOW UNDER FENCE.
3. THE TRENCH MUST BE A MINIMUM OF 6 INCHES DEEP AND 6 INCHES WIDE TO ALLOW FOR THE SILT FENCE FABRIC TO BE LAID IN THE GROUND AND BACKFILLED WITH COMPACTED MATERIAL.
4. SILT FENCE SHOULD BE SECURELY FASTENED TO EACH STEEL SUPPORT POSTS OR TO WOVEN WIRE, WHICH IS IN TURN ATTACHED TO THE STEEL FENCE POST.
5. INSPECTION SHALL BE MADE WEEKLY OR AFTER EACH RAINFALL EVENT AND REPAIR OR REPLACEMENT SHALL BE MADE PROMPTLY AS NEEDED.
6. SILT FENCE SHALL BE REMOVED WHEN THE SITE IS COMPLETELY STABILIZED SO AS NOT TO BLOCK OR IMPEDE STORM FLOW OR DRAINAGE.
7. ACCUMULATED SILT SHALL BE REMOVED WHEN IT REACHES A DEPTH OF 6 INCHES. THE SILT SHALL BE DISPOSED OF IN AN APPROVED SITE AND IN SUCH A MANNER AS TO NOT CONTRIBUTE TO ADDITIONAL SILTATION.

C3.02-05 SILT FENCE

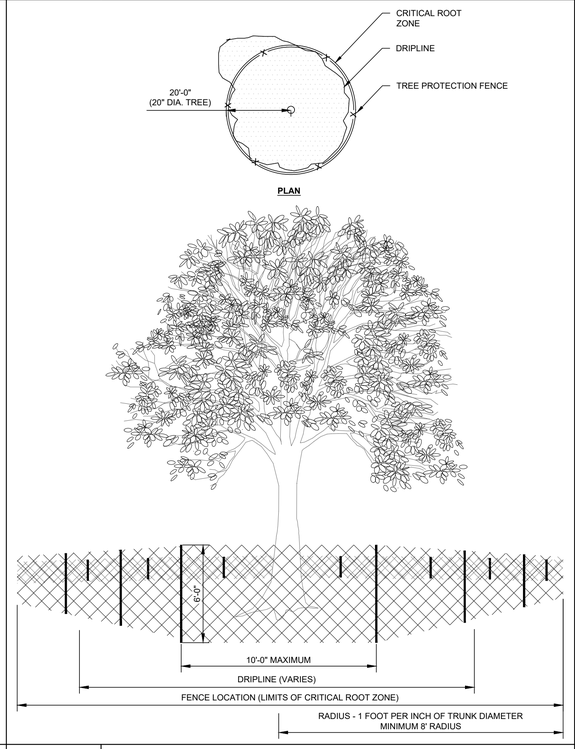

C3.02-06 TREE PROTECTION

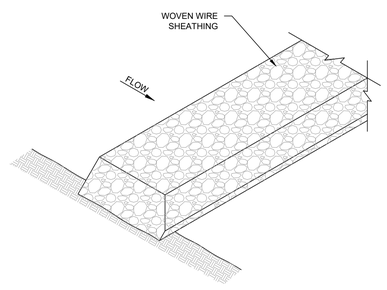

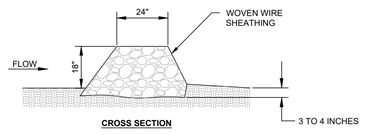

NOTE:
1. USE OPEN GRADED ROCK 4-8 INCHES IN DIAMETER FOR STREAM FLOW CONDITION. USE OPEN GRADED ROCK 3-5 INCHES IN DIAMETER FOR OTHER CONDITIONS.
2. THE ROCK DAM SHALL BE SECURED WITH A WOVEN WIRE SHEATHING HAVING A MAXIMUM OPENING OF 1 INCH AND A MINIMUM WIRE SIZE OF 20 GAUGE AND SHALL BE BURIED IN TRENCH APPROXIMATELY 3 TO 4 INCHES DEEP.
3. THE ROCK DAM SHALL BE INSPECTED WEEKLY OR AFTER EACH RAIN EVENT AND SHALL BE REPLACED WHEN THE STRUCTURE CEASED TO FUNCTION AS INTENDED DUE TO SILT ACCUMULATION AMONG THE ROCKS, WASHOUT, CONSTRUCTION TRAFFIC DAMAGE, ETC.
4. WHEN SILT REACHES DEPTH EQUAL TO ONE-THIRD OF THE HEIGHT OF THE DAM OR ONE FOOT, WHICHEVER IS LESS, THE SILT SHALL BE REMOVED AND DISPOSED OF PROPERLY.
5. WHEN THE SITE IS COMPLETELY STABILIZED, THE DAM AND ACCUMULATED SILT SHALL BE REMOVED AND DISPOSED OF IN AN APPROVED MANNER.

C3.02-07 ROCK FILTER DAM

C3.02-08

KFM ENGINEERING & DESIGN
621 N. MAIN STREET, SUITE 415
GRAPEVINE, TEXAS 76051
PHONE: (817) 416-4536
WWW.KFM-LLC.COM
TBPE #: F-20821

ISSUE:	DESCRIPTION:	DATE:
1	ISSUE FOR CONSTRUCTION	7/13/20

CLIENT: CA LUCAS LLC

PROJECT: LOT 4 - WAL-MART LUCAS

SHEET TITLE: EROSION CONTROL DETAILS

STATE OF TEXAS
DAVID M. PITCHER
134245
LICENSED
PROFESSIONAL ENGINEER
7/13/2020

PROJECT NUMBER: 010011001

DRAWN BY:	DESIGNED BY:	CHECKED BY:
ALM	DMP	JAM

DATE: 2020/07/13

SHEET: C3.02

K:\Projects\010011001\cad\sheet\010011001_er01-AMCDANIEL-4/29/2020 8:28 AM

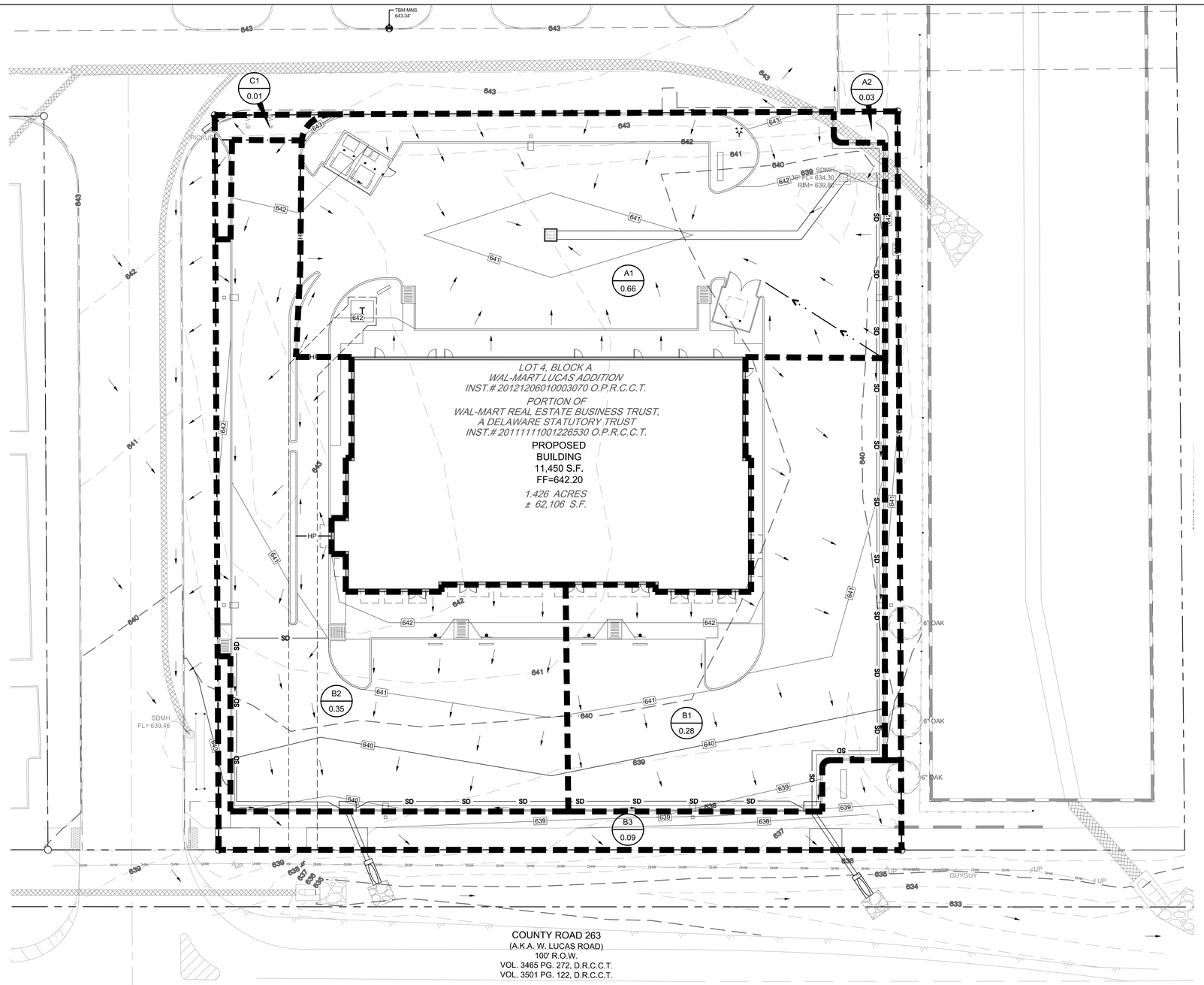

N

0 10 20 40

SCALE 1:20

PROPOSED DRAINAGE AREA LEGEND

- PROPOSED MAJOR CONTOUR
- PROPOSED MINOR CONTOUR
- EXISTING MAJOR CONTOUR
- EXISTING MINOR CONTOUR
- PROPOSED DRAINAGE AREA
- FLOW DIRECTION
- P1 / 1.0 — DRAINAGE AREA DESIGNATOR / DRAINAGE AREA ACREAGE

PROPOSED DRAINAGE AREA CALCULATIONS

AREA	AC	C	Tc (min)	I_{100} (in/hr)	Q_{100} (in/hr)	NOTES
A1	0.66	0.9	10	8.74	5.19	AREA INLET TO POND
A2	0.03	0.9	10	8.74	0.24	SHEET FLOW TO POND
B1	0.28	0.9	10	8.74	2.2	CURB INLET TO CHANNEL
B2	0.35	0.9	10	8.74	2.75	CURB INLET TO CHANNEL
B3	0.09	0.9	10	8.74	0.71	SHEET FLOW TO CHANNEL
C1	0.01	0.9	10	8.74	0.08	SHEET FLOW TO INLET
				TOTAL	7.63	

KFM ENGINEERING & DESIGN
621 N. MAIN STREET, SUITE 415
GRAPEVINE, TEXAS 76051
PHONE: (817) 416-4536
WWW.KFM-LLC.COM
TBPE #: F-20821

ISSUE:	DESCRIPTION:	DATE:
1	ISSUE FOR CONSTRUCTION	7/13/20

DELTA: DESCRIPTION: DATE:

CLIENT: CA LUCAS LLC

PROJECT: LOT 4 - WAL-MART LUCAS

SHEET TITLE: DRAINAGE AREA MAP

STATE OF TEXAS
DAVID M. PITCHER
134245
LICENSED
PROFESSIONAL ENGINEER
7/13/2020

PROJECT NUMBER: 010011001

DRAWN BY: ALM | DESIGNED BY: DMP | CHECKED BY: JAM

DATE: 2020/07/13

SHEET: C4.00

K:\Projects\010011001\cad\sheet\010011001_dwm01.AMCMILLIN=7/13/2020 2:33 PM

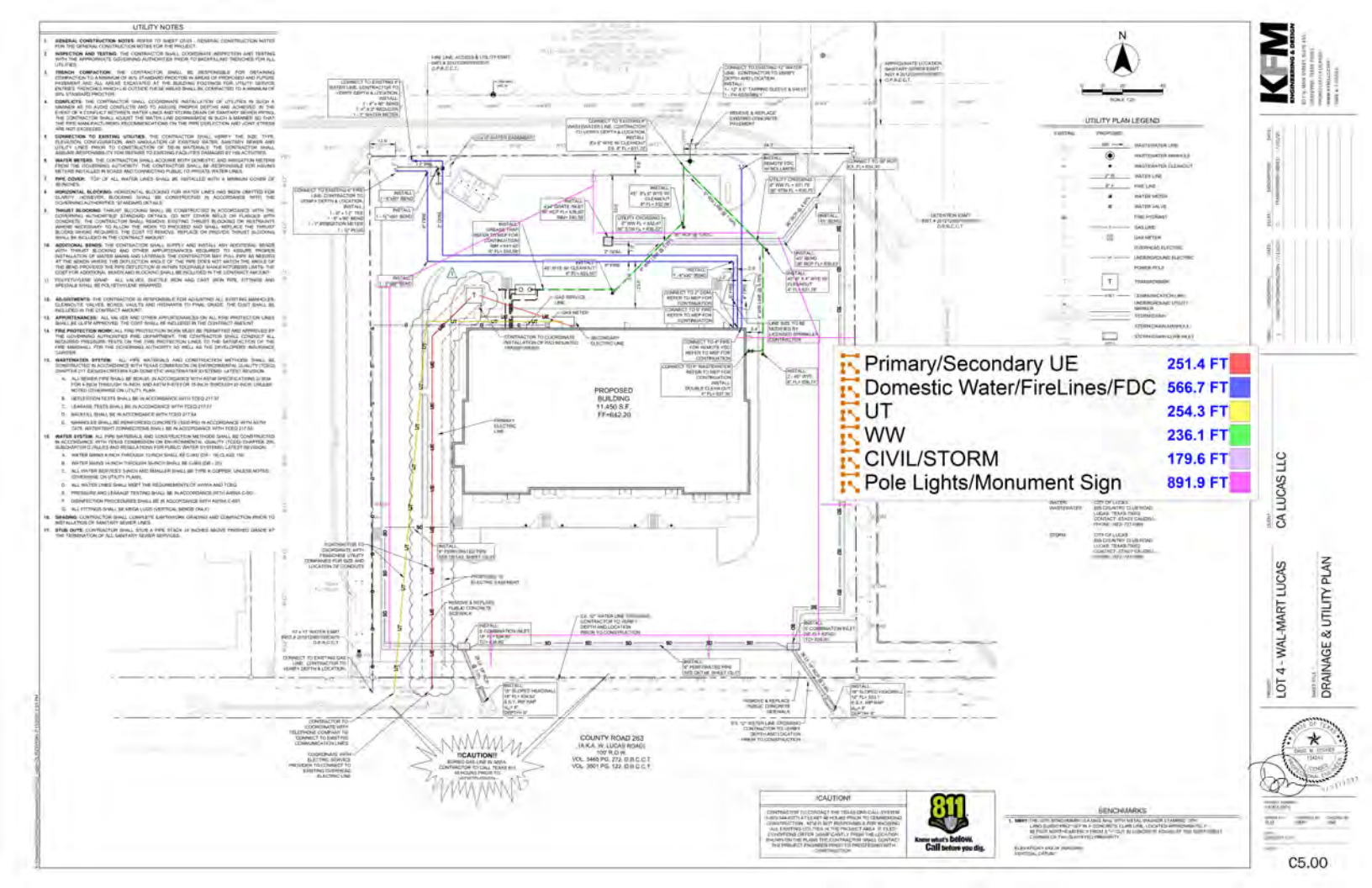
UTILITY NOTES
1. GENERAL CONSTRUCTION NOTES: REFER TO SHEET C0.03 - GENERAL CONSTRUCTION NOTES FOR THE GENERAL CONSTRUCTION NOTES FOR THE PROJECT.
2. INSPECTION AND TESTING: THE CONTRACTOR SHALL COORDINATE INSPECTION AND TESTING WITH THE APPROPRIATE GOVERNING AUTHORITIES PRIOR TO BACKFILLING TRENCHES FOR ALL UTILITIES.
3. TRENCH COMPACTION: THE CONTRACTOR SHALL BE RESPONSIBLE FOR OBTAINING COMPACTION TO A MINIMUM OF 95% STANDARD PROCTOR IN AREAS OF PROPOSED AND FUTURE PAVEMENT AND ALL AREAS EXCAVATED AT THE BUILDING FOOTINGS FOR UTILITY SERVICE ENTRIES. TRENCHES WHICH LIE OUTSIDE THESE AREAS SHALL BE COMPACTED TO A MINIMUM OF 90% STANDARD PROCTOR.
4. CONFLICTS: THE CONTRACTOR SHALL COORDINATE INSTALLATION OF UTILITIES IN SUCH A MANNER AS TO AVOID CONFLICTS AND TO ASSURE PROPER DEPTHS ARE ACHIEVED. IN THE EVENT OF A CONFLICT BETWEEN WATER LINES AND STORM DRAIN OR SANITARY SEWER INSTALL, THE CONTRACTOR SHALL ADJUST THE WATER LINE ELEVATION/GRADE IN SUCH A MANNER SO THAT THE MINIMUM REQUIRED VERTICAL SEPARATION ON THE PIPE (OUTSIDE AND JOINT STRESS ARE NOT EXCEEDED.
5. CONNECTION TO EXISTING UTILITIES: THE CONTRACTOR SHALL VERIFY THE SIZE, TYPE, ELEVATION, CONFIGURATION, AND ANGULATION OF EXISTING WATER, SANITARY SEWER AND UTILITY LINES PRIOR TO CONSTRUCTION OF TIE-IN MATERIALS. THE CONTRACTOR SHALL ASSUME RESPONSIBILITY FOR REPAIRS TO EXISTING FACILITIES DAMAGED BY HIS ACTIVITIES.
6. WATER METERS: THE CONTRACTOR SHALL ACQUIRE BOTH DOMESTIC AND IRRIGATION METERS FROM THE GOVERNING AUTHORITY. THE CONTRACTOR SHALL BE RESPONSIBLE FOR HAVING METERS INSTALLED IN BOXES AND CONNECTING PUBLIC TO PRIVATE WATER LINES.
7. PIPE COVER: TOP OF ALL WATER LINES SHALL BE INSTALLED WITH A MINIMUM COVER OF 48 INCHES.
8. HORIZONTAL BLOCKING: HORIZONTAL BLOCKING FOR WATER LINES HAS BEEN OMITTED FOR CLARITY. HOWEVER, BLOCKING SHALL BE CONSTRUCTED IN ACCORDANCE WITH THE GOVERNING AUTHORITIES' STANDARD DETAILS.
9. THRUST BLOCKING: THRUST BLOCKING SHALL BE CONSTRUCTED IN ACCORDANCE WITH THE GOVERNING AUTHORITIES' STANDARD DETAILS. DO NOT COVER BELLS OR FLANGES WITH CONCRETE. THE CONTRACTOR SHALL REMOVE EXISTING THRUST BLOCKING ON RELOCATIONS WHERE NECESSARY TO ALLOW THE WORK TO PROCEED AND SHALL REPLACE THE THRUST BLOCKING WHERE REQUIRED. THE COST TO REMOVE, REPLACE OR PROVIDE THRUST BLOCKING SHALL BE INCLUDED IN THE CONTRACT AMOUNT.
10. ADDITIONAL BENDS: THE CONTRACTOR SHALL SUPPLY AND INSTALL ANY ADDITIONAL BENDS WITH THRUST BLOCKING AND OTHER APPURTENANCES REQUIRED TO ASSURE PROPER INSTALLATION OF WATER MAINS AND LATERALS. THE CONTRACTOR MAY PULL PIPE AS NEEDED AT THE BENDS WHERE THE DEFLECTION ANGLE OF THE PIPE DOES NOT MATCH THE ANGLE OF THE BEND PROVIDED THE PIPE DEFLECTION IS WITHIN TOLERABLE MANUFACTURER'S LIMITS. THE COST FOR ADDITIONAL BENDS AND BLOCKING SHALL BE INCLUDED IN THE CONTRACT AMOUNT.
11. POLYETHYLENE WRAP: ALL VALVES, DUCTILE IRON AND CAST IRON PIPE, FITTINGS AND SPECIALS SHALL BE POLYETHYLENE WRAPPED.
12. ADJUSTMENTS: THE CONTRACTOR IS RESPONSIBLE FOR ADJUSTING ALL EXISTING MANHOLES, CLEANOUTS, VALVES, BOXES, VAULTS AND VISTAMETS TO FINAL GRADE. THE COST SHALL BE INCLUDED IN THE CONTRACT AMOUNT.
13. APPURTENANCES: ALL VALVES AND OTHER APPURTENANCES ON ALL FIRE PROTECTION LINES SHALL BE UL/FM APPROVED. THE COST SHALL BE INCLUDED IN THE CONTRACT AMOUNT.
14. FIRE PROTECTION WORK: ALL FIRE PROTECTION WORK MUST BE PERMITTED AND APPROVED BY THE GOVERNING AUTHORITIES' FIRE DEPARTMENT. THE CONTRACTOR SHALL CONDUCT ALL REQUIRED PRESSURE TESTS ON THE FIRE PROTECTION LINES TO THE SATISFACTION OF THE FIRE MARSHALL. FOR THE GOVERNING AUTHORITY AS WELL AS THE DEVELOPER'S INSURANCE CARRIER.
15. WASTEWATER SYSTEM: ALL PIPE MATERIALS AND CONSTRUCTION METHODS SHALL BE CONSTRUCTED IN ACCORDANCE WITH TEXAS COMMISSION ON ENVIRONMENTAL QUALITY (TCEQ) CHAPTER 217 EDUCATION AND CERTIFICATION FOR DOMESTIC AND WASTEWATER SYSTEMS - LATEST REVISION.
a. ALL SEWER PIPE SHALL BE SDR-26, IN ACCORDANCE WITH ASTM SPECIFICATIONS D-3034 FOR 4 INCH THROUGH 15 INCH, AND ASTM F-679 FOR 18 INCH THROUGH 24 INCH, UNLESS NOTED OTHERWISE ON UTILITY PLAN.
B. SEWER SYSTEM TESTS SHALL BE IN ACCORDANCE WITH TCEQ 217.57
C. LEAKAGE TESTS SHALL BE IN ACCORDANCE WITH TCEQ 217.57
D. BACKFILL SHALL BE IN ACCORDANCE WITH TCEQ 217.54
E. MANHOLES SHALL BE REINFORCED CONCRETE (SEE PSI) IN ACCORDANCE WITH ASTM C478. WATERTIGHT CONNECTIONS SHALL BE IN ACCORDANCE WITH TCEQ 217.53.
16. WATER SYSTEM: ALL PIPE MATERIALS AND CONSTRUCTION METHODS SHALL BE CONSTRUCTED IN ACCORDANCE WITH TEXAS COMMISSION ON ENVIRONMENTAL QUALITY (TCEQ) CHAPTER 290, SUBCHAPTER D RULES AND REGULATIONS FOR PUBLIC WATER SYSTEMS - LATEST REVISION.
A. WATER MAINS 4 INCH THROUGH 12 INCH SHALL BE C-900 (DR - 18) CLASS 150.
B. WATER MAINS 16 INCH THROUGH 24 INCH SHALL BE C-905 (DR - 25).
C. ALL WATER SERVICES 3 INCH AND SMALLER SHALL BE TYPE K COPPER, UNLESS NOTED OTHERWISE ON UTILITY PLANS.
D. ALL WATER LINES SHALL MEET THE REQUIREMENTS OF AWWA AND TCEQ.
E. PRESSURE AND LEAKAGE TESTING SHALL BE IN ACCORDANCE WITH AWWA C-600.
F. DISINFECTION PROCEDURES SHALL BE IN ACCORDANCE WITH AWWA C-651.
G. ALL FITTINGS SHALL BE MEGA LUGS (VERTICAL BENDS ONLY)
18. GRADING: CONTRACTOR SHALL COMPLETE EARTHWORK GRADING AND COMPACTION PRIOR TO INSTALLATION OF SANITARY SEWER LINES.
17. STUB OUTS: CONTRACTOR SHALL STUB A PIPE STACK 24 INCHES ABOVE FINISHED GRADE AT THE TERMINATION OF ALL SANITARY SEWER SERVICES.
PROPOSED BUILDING 11,450 S.F. FF=642.20
COUNTY ROAD 263 (A.K.A. W. LUCAS ROAD) 100' R.O.W. VOL. 3465 PG. 272, O.R.C.C.T. VOL. 3501 PG. 122, O.R.C.C.T.
!CAUTION!
811 Know what's below. Call before you dig.
BENCHMARKS
UTILITY PLAN LEGEND
Primary/Secondary UE 251.4 FT
Domestic Water/FireLines/FDC 566.7 FT
UT 254.3 FT
WW 236.1 FT
CIVIL/STORM 179.6 FT
Pole Lights/Monument Sign 891.9 FT
KFM ENGINEERING & DESIGN
CA LUCAS LLC
LOT 4 - WAL-MART LUCAS
DRAINAGE & UTILITY PLAN
C5.00

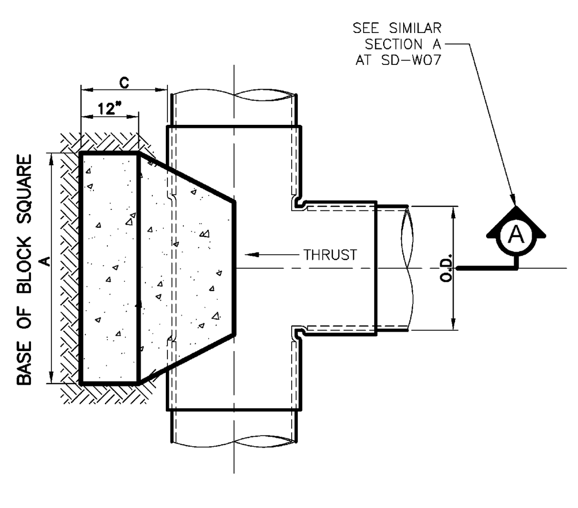

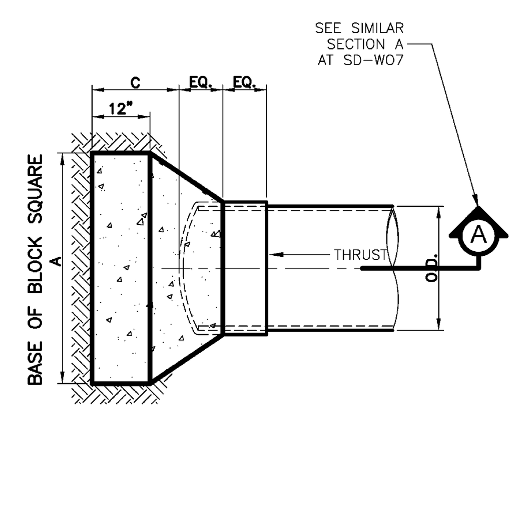

PLAN OF TEE THRUST BLOCK
SCALE N.T.S.

PLAN OF PLUG THRUST BLOCK
SCALE N.T.S.

I.D. (IN.)	C (FT.)	THRUST (TONS)	EARTH		ROCK	
			A (FT.)	VOL. (C.Y.)	A (FT.)	VOL. (C.Y.)
4,6,8	1.5	5.1	2.5	0.3	2.0	0.2
10,12	1.5	11.3	3.5	0.6	2.5	0.3
16,18	2.0	25.5	5.5	1.6	4.0	0.9
20	2.0	31.5	6.0	1.9	4.0	0.9
24	2.5	45.2	7.0	3.1	5.0	1.7
30	3.0	53.0	7.5	4.1	5.5	2.4
36	4.0	76.3	9.0	7.3	6.5	4.2

NOTE : 1. REFER TO NCTCOG TABLE FOR PIPE DIAMETER OVER 36".
2. CONCRETE MINIMUM STRENGTH 3000 PSI.
3. 1-80 LBS BAG OF QUIKRETE = 0.02 CY.

CITY OF ALLEN
DEPARTMENT OF ENGINEERING

HORIZONTAL THRUST BLOCK AT TEES AND PLUGS

STANDARD CONSTRUCTION DETAILS WATER

DATE:	REV DATE:	SHEET :
MAY 1991	OCT. 2015	SD-W08

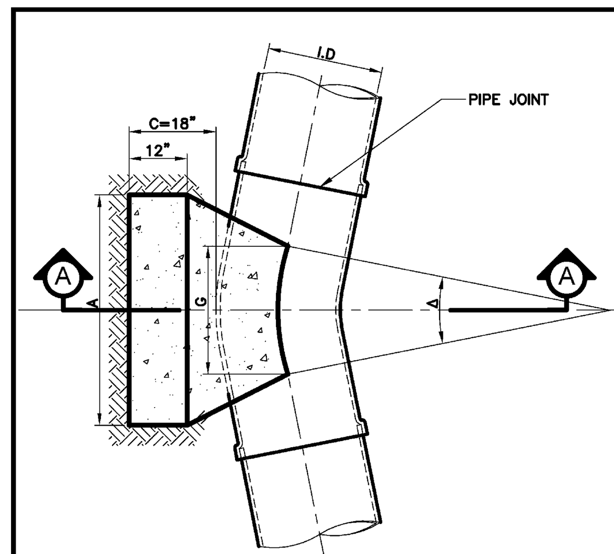

PLAN VIEW
SCALE N.T.S.

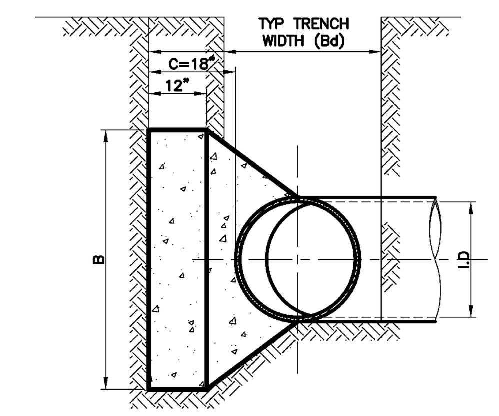

SECTION A
SCALE N.T.S.

NOTE : 1. REFER TO NCTCOG TABLE FOR PIPE DIAMETER OVER 36".
2. CONCRETE MINIMUM STRENGTH 3000 PSI.
3. 1-80 LBS BAG OF QUIKRETE = 0.02 CY.

Δ = 11.25°

I.D. (IN.)	G (FT.)	THRUST (TONS)	EARTH			ROCK		
			A (FT.)	B (FT.)	VOL. (C.Y.)	A (FT.)	B (FT.)	VOL. (C.Y.)
4,6,8	0.4	1.0	1.0	1.5	0.1	1.0	1.0	0.1
10,12	0.6	2.2	1.5	1.5	0.1	1.0	1.5	0.1
16,18	0.8	5.0	2.0	2.5	0.3	1.5	2.0	0.2
20	0.9	6.2	2.0	3.5	0.4	1.5	3.0	0.3
24	1.1	8.9	3.0	3.5	0.5	1.5	3.0	0.3
30	1.4	10.4	3.0	3.5	0.6	2.0	3.5	0.4
36	1.7	15.0	3.5	4.5	0.9	2.0	4.0	0.5

Δ = 22.50°

I.D. (IN.)	G (FT.)	THRUST (TONS)	EARTH			ROCK		
			A (FT.)	B (FT.)	VOL. (C.Y.)	A (FT.)	B (FT.)	VOL. (C.Y.)
4,6,8	0.8	2.0	1.5	1.5	0.1	1.0	1.0	0.1
10,12	1.1	4.4	2.0	2.5	0.3	1.5	1.5	0.1
16,18	1.6	9.9	3.0	3.5	0.6	2.0	2.5	0.3
20	1.8	12.3	3.5	3.5	0.7	2.0	3.0	0.4
24	2.2	17.7	4.0	4.5	1.0	3.0	3.5	0.5
30	2.7	20.7	5.0	4.5	1.5	3.0	4.0	0.8
36	3.3	29.8	5.5	5.5	2.3	4.0	4.0	1.3

Δ = 30°

I.D. (IN.)	G (FT.)	THRUST (TONS)	EARTH			ROCK		
			A (FT.)	B (FT.)	VOL. (C.Y.)	A (FT.)	B (FT.)	VOL. (C.Y.)
4,6,8	1.0	2.6	2.0	1.5	0.2	1.0	1.5	0.1
10,12	1.5	5.9	2.5	2.5	0.3	2.0	1.5	0.2
16,18	2.2	13.2	3.5	4.0	0.8	2.5	3.0	0.4
20	2.4	16.3	4.5	4.0	1.0	3.0	3.0	0.5
24	2.9	23.4	6.0	4.0	1.4	3.5	3.5	0.7
30	3.6	27.5	6.5	5.0	1.9	3.5	4.0	0.9
36	4.4	39.5	7.0	6.0	3.4	4.5	4.5	1.6

Δ = 45°

I.D. (IN.)	G (FT.)	THRUST (TONS)	EARTH			ROCK		
			A (FT.)	B (FT.)	VOL. (C.Y.)	A (FT.)	B (FT.)	VOL. (C.Y.)
4,6,8	1.5	3.9	2.0	2.0	0.2	1.5	1.5	0.1
10,12	2.2	8.7	3.5	2.5	0.5	2.0	2.5	0.3
16,18	3.2	19.5	4.5	4.5	1.2	3.0	3.5	0.6
20	3.6	24.1	5.5	4.5	1.5	3.5	3.5	0.7
24	4.3	34.6	8.0	4.5	2.3	4.5	4.0	1.1
30	5.4	40.6	8.5	5.0	3.2	5.5	4.0	1.6
36	6.5	58.5	10.0	6.0	5.3	6.5	4.5	2.6

Δ = 67.50°

I.D. (IN.)	G (FT.)	THRUST (TONS)	EARTH			ROCK		
			A (FT.)	B (FT.)	VOL. (C.Y.)	A (FT.)	B (FT.)	VOL. (C.Y.)
4,6,8	2.1	5.6	3.0	2.0	0.3	2.0	1.5	0.2
10,12	3.1	12.6	5.5	2.5	0.8	3.5	2.0	0.4
16,18	4.7	28.3	7.5	4.0	1.9	5.5	3.0	0.9
20	5.2	34.9	9.0	4.0	2.3	5.5	3.5	1.2
24	6.2	50.3	11.5	4.5	3.5	6.5	4.0	1.6
30	7.8	58.9	12.0	5.0	4.8	7.5	4.0	2.2
36	9.4	84.9	14.5	6.0	8.2	9.5	4.5	3.8

Δ = 90°

I.D. (IN.)	G (FT.)	THRUST (TONS)	EARTH			ROCK		
			A (FT.)	B (FT.)	VOL. (C.Y.)	A (FT.)	B (FT.)	VOL. (C.Y.)
4,6,8	2.7	7.1	5.0	1.5	0.4	2.0	2.0	0.2
10,12	4.0	16.0	6.5	2.5	1.0	3.5	2.5	0.5
16,18	6.0	36.0	9.0	4.0	2.4	4.5	4.0	1.0
20	6.6	44.4	10.0	4.5	3.1	6.0	4.0	1.5
24	7.9	64.0	14.5	4.5	5.0	8.0	4.0	2.1
30	9.9	75.0	15.0	5.0	6.7	10.0	4.0	3.3
36	11.9	108.0	18.0	6.0	11.4	12.0	4.5	5.3

CITY OF ALLEN
DEPARTMENT OF ENGINEERING

HORIZONTAL THRUST BLOCK AT PIPE BEND

STANDARD CONSTRUCTION DETAILS WATER

DATE:	REV DATE:	SHEET :
MAY 1991	OCT. 2015	SD-W07

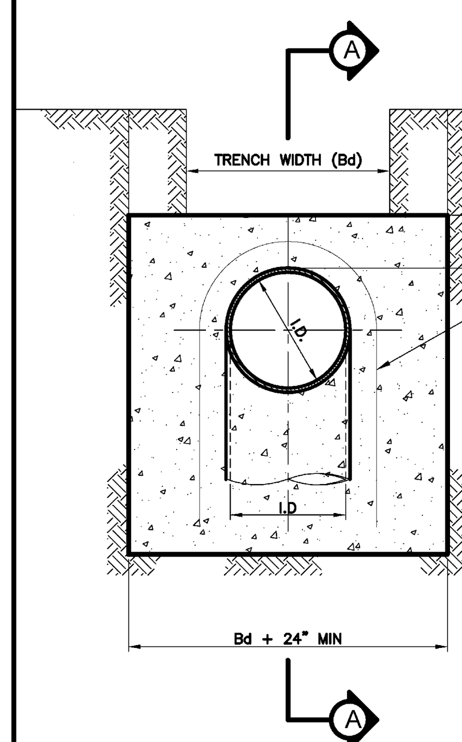

ELEVATION "B-B"
SCALE N.T.S.

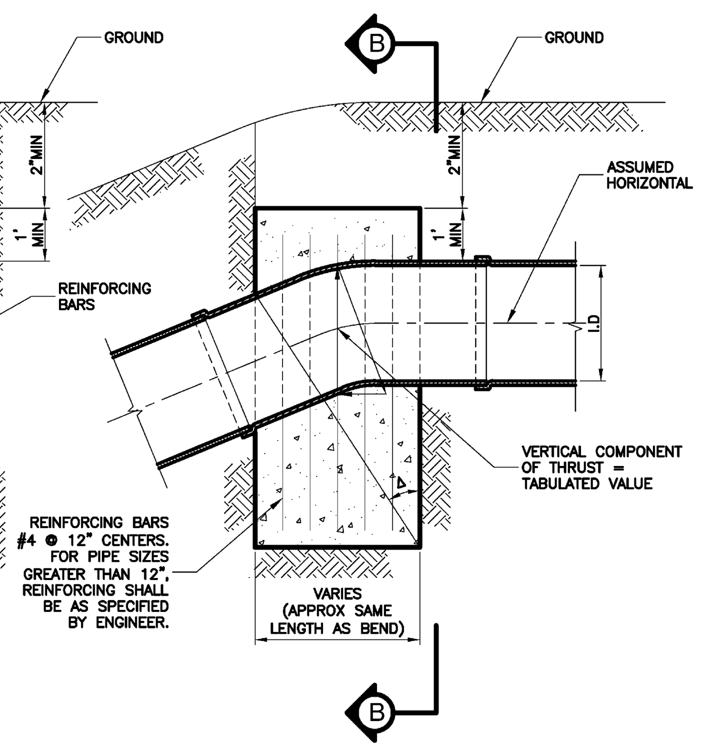

SECTION "A-A"
SCALE N.T.S.

Δ	11.25°		22.50°		30°		45°		67.50°		90°	
I.D. (IN.)	THRUST (TONS)	VOL. (C.Y.)	THRUST (TONS)	VOL. (C.Y.)	THRUST (TONS)	VOL. (C.Y.)	THRUST (TONS)	VOL. (C.Y.)	THRUST (TONS)	VOL. (C.Y.)	THRUST (TONS)	VOL. (C.Y.)
4,6,8	1.0	0.5	2.0	1.0	2.5	1.3	3.6	1.8	4.6	2.3	5.0	2.5
10,12	2.2	1.1	4.3	2.2	5.7	2.8	8.0	4.0	10.5	5.2	11.3	5.7
16,18	5.0	2.5	9.7	4.9	12.7	6.4	18.0	9.0	23.5	11.8	25.5	12.7
20	6.1	3.1	12.0	6.0	15.7	7.9	22.2	11.1	29.2	14.5	31.4	15.7
24	8.2	4.4	17.3	8.7	22.6	11.3	32.0	16.0	41.8	20.9	45.2	22.6
30	10.5	5.2	20.3	10.1	26.5	13.3	37.5	18.8	49.0	24.5	53.1	26.5
36	14.9	7.5	29.2	14.6	38.2	19.1	54.0	27.0	70.5	35.3	76.4	38.2

NOTE : 1. REFER TO NCTCOG TABLE FOR PIPE DIAMETER OVER 36".
2. CONCRETE MINIMUM STRENGTH 3000 PSI.
3. 1-80 LBS BAG OF QUIKRETE = 0.02 CY.

CITY OF ALLEN
DEPARTMENT OF ENGINEERING

VERTICAL THRUST BLOCK AT PIPE BEND

STANDARD CONSTRUCTION DETAILS WATER

DATE:	REV DATE:	SHEET :
OCT 2015		SD-W07A

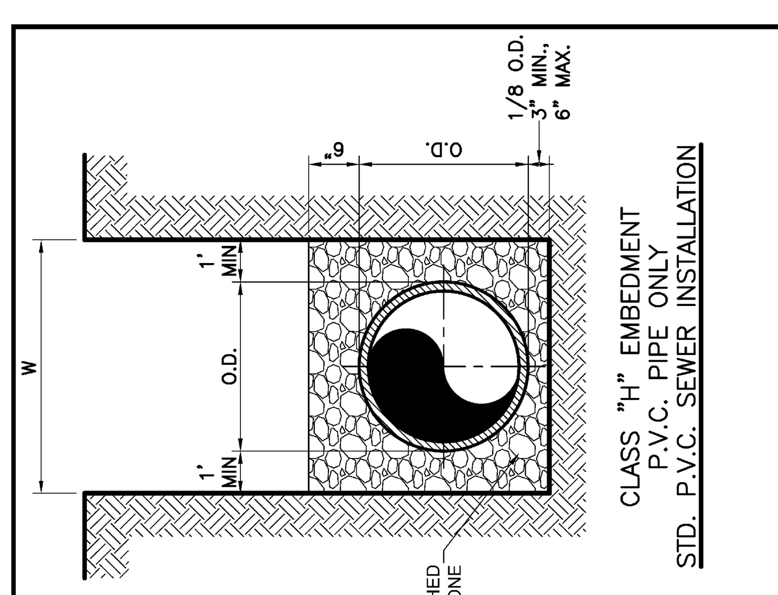

CLASS "H" EMBEDMENT
P.V.C. PIPE ONLY
STD. P.V.C. SEWER INSTALLATION

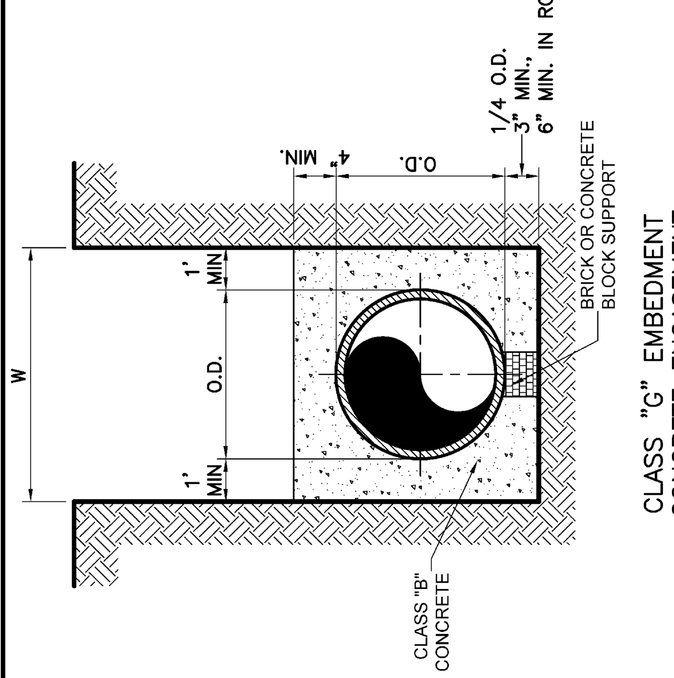

CLASS "G" EMBEDMENT
CONCRETE ENCASEMENT

CRUSHED STONE SHALL BE 3/4", PASSING #4 SIEVE

NOTES:
1. TYPE OF EMBEDMENT OR ENCASEMENT SHALL BE SHOWN IN THE PROFILES FOR ALL LINES.
2. LOAD CALCULATIONS SHALL BE SUBMITTED TO THE ENGINEERING DEPARTMENT.
3. WIDTH OF TRENCH SHALL BE 24 INCHES MINIMUM OR O.D. PLUS 8" WHICHEVER IS GREATER.
4. DEPTH OF TRENCH BELOW PIPE SHALL BE AS FOLLOWS: 3" (MIN) FOR 27"ø PIPE AND SMALLER 4" (MIN) FOR 30"ø TO 60"ø PIPE 6" (MIN) FOR 66"ø PIPE AND LARGER
5. DENISTY SHALL BE 95% UNDER PAVING, 90% ELSEWHERE.

CITY OF ALLEN

EMBEDMENT DETAILS

STANDARD CONSTRUCTION DETAILS SANITARY SEWER

DATE:	REV DATE:	SHEET :
MAY 1991	MAY 2017	SD-SS03

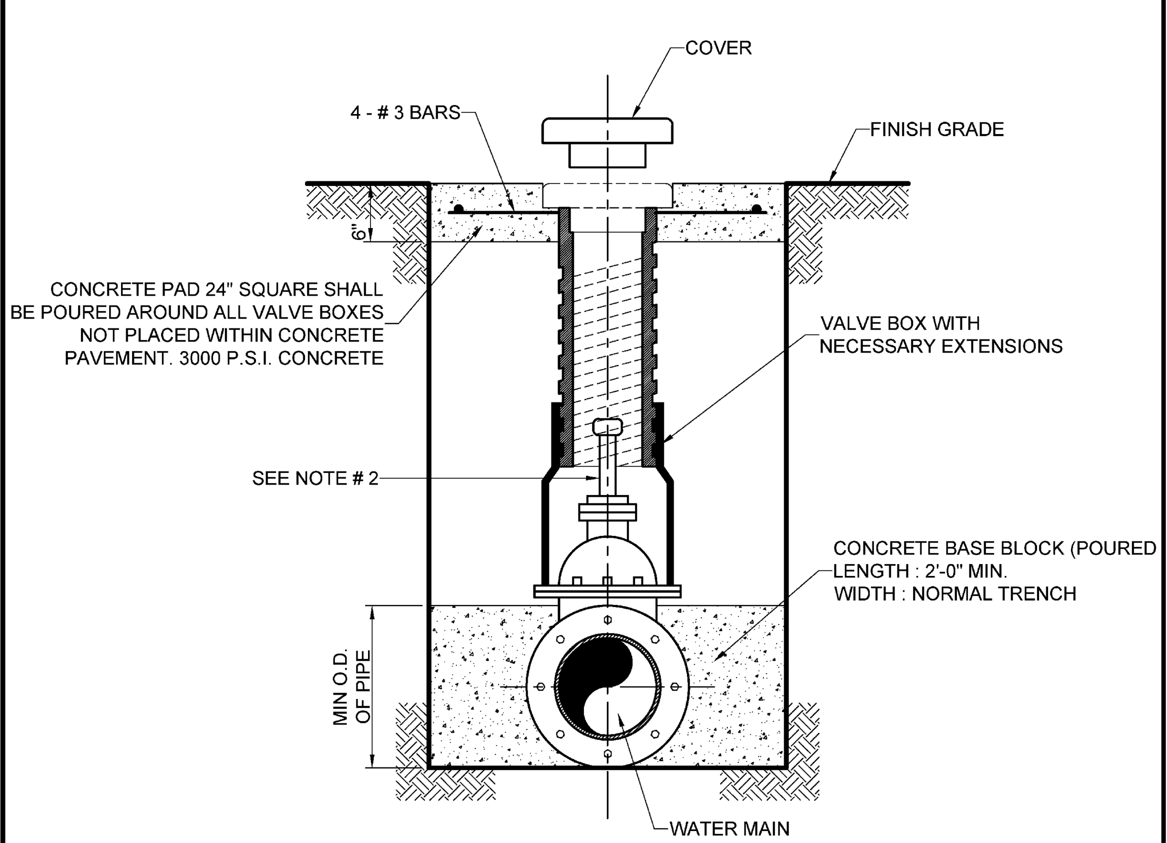

TYPICAL VALVE SETTING & BOX

NOTE:
1. 4"-12" R.S. GATE VALVES SHALL BE IN ACCORDANCE WITH AWWA STANDARD C-509
2. A PERMANENTLY ATTACHED VALVE EXTENSION STEM SHALL BE REQUIRED FOR ANY VALVE THATS OPERATING NUT IS LOCATED IN EXCESS OF 4 FEET BELOW THE TOP OF VALVE BOX. THIS EXTENSION SHALL BE OF SUFFICIENT LENGTH TO INSURE THAT ITS TOP IS WITHIN 4 FEET OF VALVE BOX LID.
3. DUCTILE IRON OR C-900 PVC PIPE SHALL BE USED FOR VALVE STACKS WITH TWO PIECE ADJUSTABLE (SHORTY) VALVE BOXES.
4. A "V" SHALL BE PLACED ON NEAREST CURB WHERE VALVE IS IN FRONT OF CURB, AND AN "^" SHALL BE PLACED ON NEAREST CURB FOR INSTALLATIONS BEHIND THE CURB. SYMBOL SHALL BE SAWCUT INTO CURB AND PAINTED BLUE.
5. ALL CAST IRON MATERIALS SHALL BE DOMESTIC.

CITY OF ALLEN
DEPARTMENT OF ENGINEERING

VALVE SETTING & BOX

STANDARD CONSTRUCTION DETAILS WATER

DATE:	REV DATE:	SHEET :
MAY 1991	JUNE 2008	SD-W10

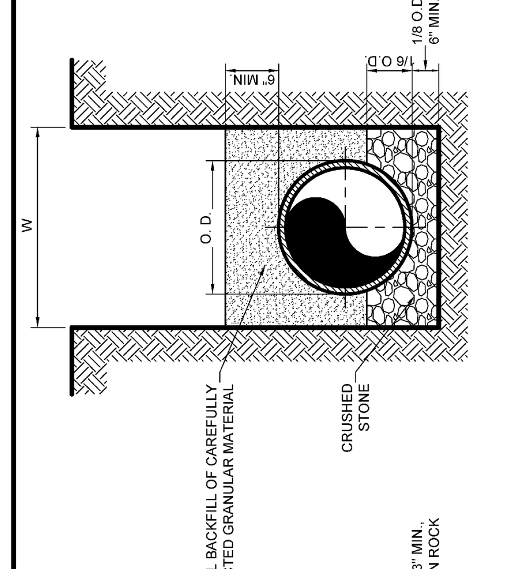

CLASS "C" EMBEDMENT

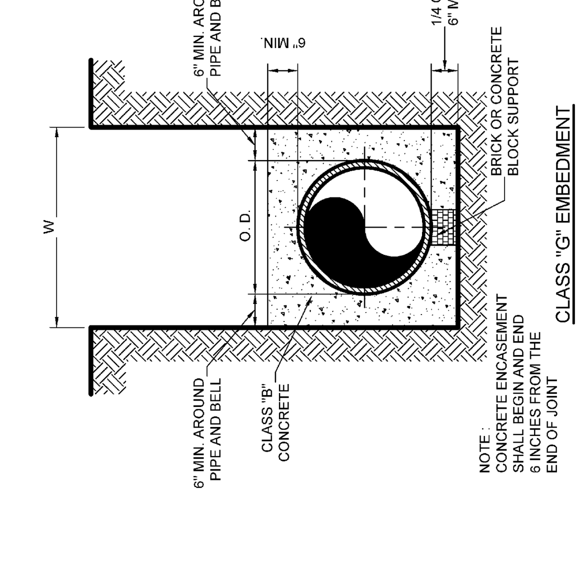

CLASS "G" EMBEDMENT

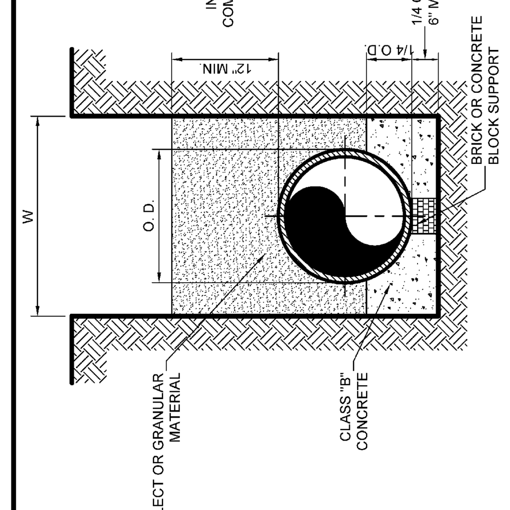

CONCRETE CRADLE
CLASS "A" EMBEDMENT

W = 16" + O.D. MIN.
24" + O.D. MAX.

TABLE OF QUANTITIES OF MATERIAL IN CUBIC YARDS PER 100 LINEAR FEET

INSIDE DIAMETER OF PIPE	OUTSIDE DIAMETER OF PIPE	TRENCH WIDTH IN IN.	TRENCH WIDTH IN FEET	CONCRETE CLASS"A" EMBED.	CONCRETE CLASS"G" EMBED.	CRUSHED STONE CLASS"C" EMBED.
REINFORCED CONCRETE CYLINDER PIPE						
14"	17.25"	34"	2.83	6.37	10.59	4.48
16"	19.38"	36"	3.00	7.49	12.26	4.94
18"	21.78"	38"	3.17	8.77	14.33	5.43
20"	23.78"	40"	3.33	10.00	16.14	5.91
24"	27.75"	44"	3.67	12.66	20.02	7.46

NOTE : ALL COMPACTION SHALL BE IN ACCORDANCE WITH STANDARD SPECIFICATIONS AND / OR SPECIAL PRVISIONS.

CITY OF ALLEN
DEPARTMENT OF ENGINEERING

EMBEDMENT DETAILS

STANDARD CONSTRUCTION DETAILS WATER

DATE:	REV DATE:	SHEET :
MAY 1991	AUG. 2006	SD-W06

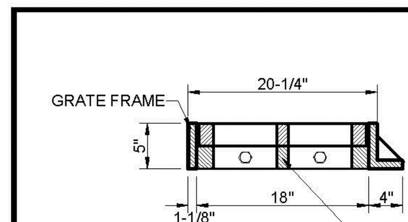

SECTION A
SCALE N.T.S.

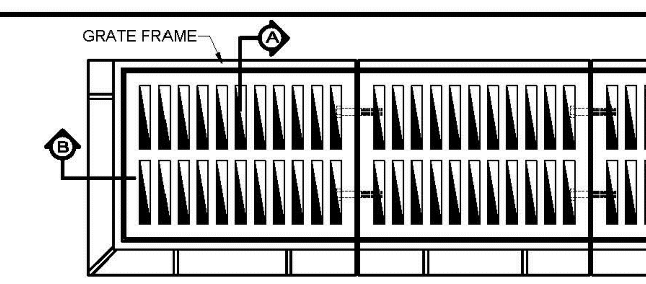

PLAN
SCALE N.T.S.

NOTES :
1. ALL LAPS AND EXTENSION OF REINFORCING BARS SHALL BE 36 BAR IN DIAMETERS UNLESS NOTED OTHERWISE.
2. TACK WELD GRATES IN PLACE.
3. PIPE MAYBE PLACED IN ANY WALL, BUT
4. SHALL NOT ENTER ANY CORNER OR BOTTOM.
5. GRATE AND FRAME SHALL BE PATTERN No. 814AS MANUFACTURED BY BASS & HAYES FOUNDRY, INC. OR APPROVED EQUAL.
6. ALL CAST IRON FITTINGS SHALL BE DOMESTIC.

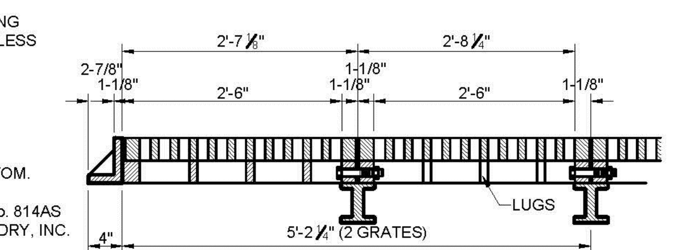

SECTION B
SCALE N.T.S.

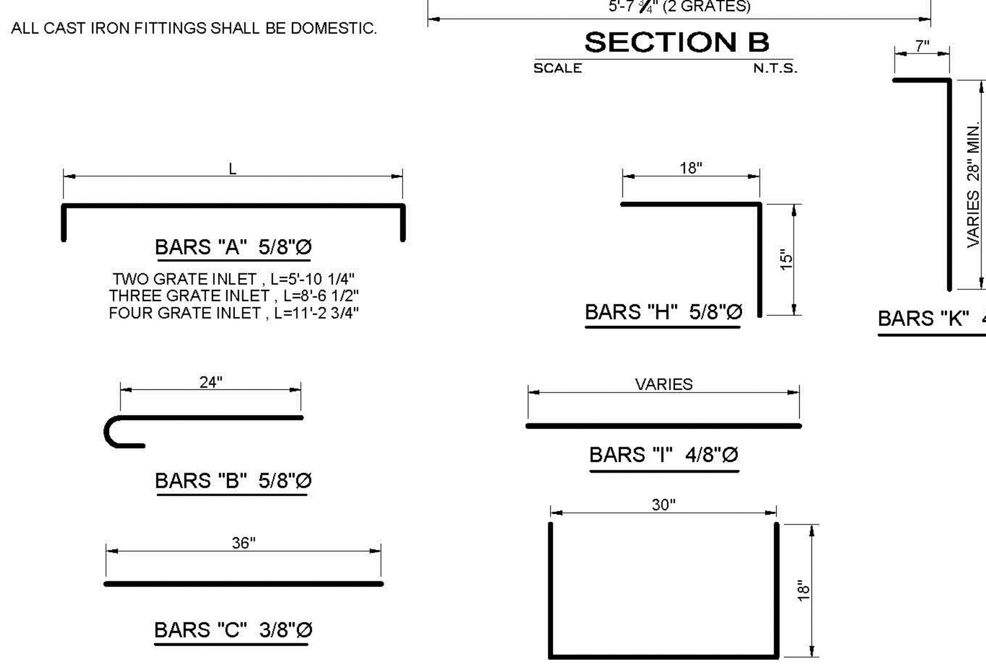

CITY OF ALLEN
DEPARTMENT OF ENGINEERING

COMBINATION INLETS GRATE DETAILS AND BAR DIAGRAMS

STANDARD CONSTRUCTION DETAILS STORM DRAINAGE

DATE:	REV DATE:	SHEET :
JULY 1991	AUG. 2006	SD-D17

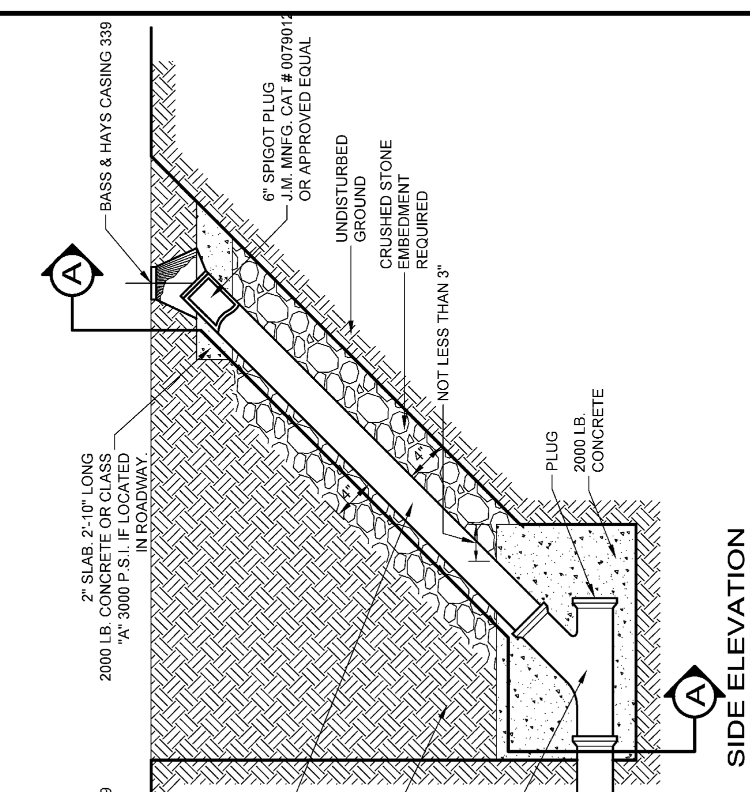

SIDE ELEVATION
NTS

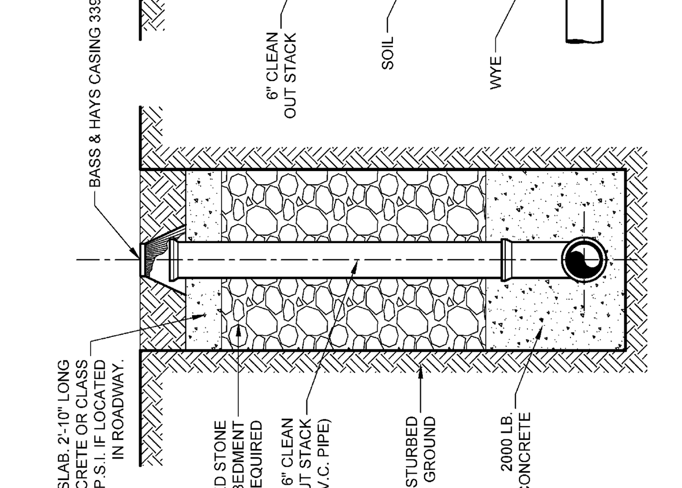

SECTION A-A
SCALE NTS

STANDARD CLEANOUT

CITY OF ALLEN

STANDARD CLEANOUT

STANDARD CONSTRUCTION DETAILS SANITARY SEWER

DATE:	REV DATE:	SHEET :
MAY 1991	MAY 2006	SD-SS07

KFM ENGINEERING & DESIGN
621 N. MAIN STREET, SUITE 415
GRAPEVINE, TEXAS 76051
PHONE: (817) 416-4536
WWW.KFM-LLC.COM
TBPE #: F-20821

ISSUE:	DESCRIPTION:	DATE:	DELTA:	DESCRIPTION:	DATE:
1	ISSUE FOR CONSTRUCTION	7/13/20			

CLIENT
CA LUCAS LLC

PROJECT
LOT 4 - WAL-MART LUCAS

SHEET TITLE
UTILITY DETAILS

STATE OF TEXAS
DAVID M. PITCHER
134245
LICENSED PROFESSIONAL ENGINEER
7/13/2020

PROJECT NUMBER: 010011001

DRAWN BY:	DESIGNED BY:	CHECKED BY:
ALM	DMP	JAM

DATE: 2020/07/13

SHEET:
C5.01

K:\Projects\010011001\cad\sheet\010011001_utd01-AMCDANIEL-5/1/2020 10:39 AM

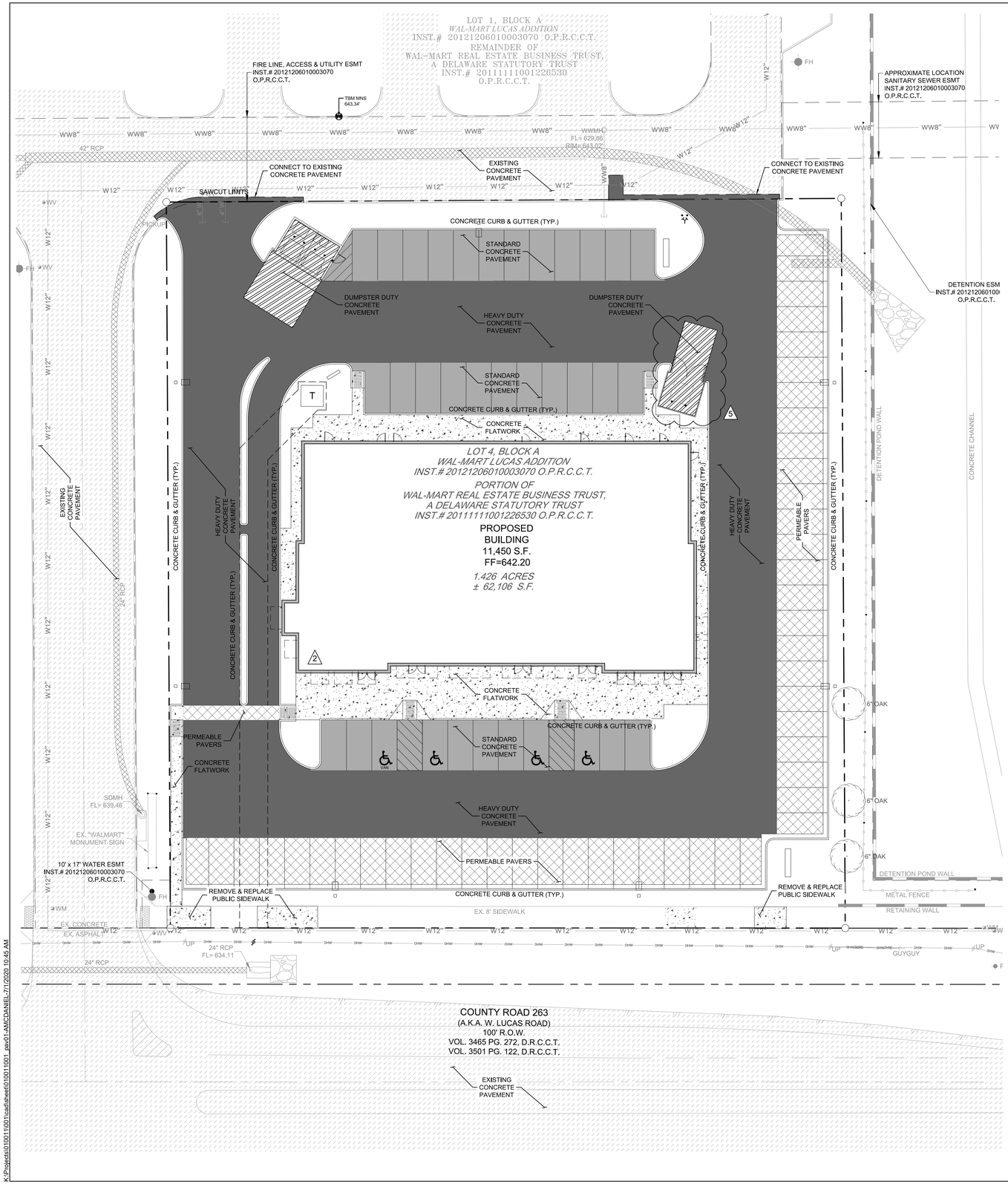

GENERAL PAVING NOTES

1. **GENERAL CONSTRUCTION NOTES:** REFER TO SHEET C0.03 "GENERAL CONSTRUCTION NOTES" FOR THE GENERAL CONSTRUCTION NOTES FOR THE PROJECT.
2. **PAVEMENT DESIGN:** ALL ON SITE CONCRETE PAVING SHALL BE OF THE THICKNESS AND STRENGTH SHOWN ON THE PLAN. CONCRETE SHALL BE THE DESIRED STRENGTH AT 28 DAYS AND REINFORCED WITH #3 BARS @ 18 INCHES O.C.E.W
3. **REINFORCING BARS:** ALL REINFORCING BARS SHALL BE GRADE 40 KSI DEFORMED REINFORCING STEEL. REINFORCING SHALL BE SUPPORTED BY CHAIRS AND SPACED AT 16 SF MAX. INTERVALS. REFERENCE LEGEND FOR REINFORCEMENT SIZE AND SPACING.
4. **BAR CHAIRS:** ALL REINFORCING STEEL AND DOWEL BARS IN PAVEMENT SHALL BE SUPPORTED AND MAINTAINED AT THE CORRECT CLEARANCES BY THE USE OF BAR CHAIRS OR OTHER APPROVED SUPPORT.
5. **TEMPERATURE CONDITIONS FOR CONCRETE PLACEMENT:** CONCRETE SHALL NOT BE PLACED WHEN THE TEMPERATURE IS BELOW 40 DEGREES FAHRENHEIT AND FALLING, BUT MAY BE PLACED WHEN TEMPERATURE IS ABOVE 35 DEGREES FAHRENHEIT AND RISING. THE TEMPERATURE READING SHALL BE TAKEN IN THE SHADE AND AWAY FROM ARTIFICIAL HEAT.
6. **CONCRETE PAVEMENT CURING:** CONCRETE TO BE FLOAT FINISHED AND CURED FOR A MINIMUM OF 72 HOURS. MEMBRANE CURING TYPE 2, WHITE PIGMENTED, SHALL BE USED FOR CURING ALL CONCRETE SURFACES IMMEDIATELY AFTER FINISHING OF SURFACES AND SHALL BE IN ACCORDANCE WITH SECTION THE TEXAS HIGHWAY STANDARD SPECIFICATIONS, ITEM 1526.
7. **SUBGRADE PREPARATION:** SUBGRADE SHALL BE SCARIFIED TO A DEPTH OF 6 INCHES AND SHALL BE RECOMPACTED TO A (MIN.) OF 95% OF THE STANDARD PROCTOR (ASTM -0698) MAXIMUM DRY DENSITY AT A MOISTURE CONTENT WITHIN 1% TO 3% ABOVE OPTIMUM MOISTURE CONTENT. REFER TO GEOTECHNICAL REPORT AND SUPPLEMENTS BY ALPHA TESTING, INC., REPORT NO. G201275, DATED 05-27-2020.
   - PREPARATION OF SUBGRADE UNDER PAVED AREAS SHALL BE PERFORMED IN ACCORDANCE WITH THE GOVERNING AUTHORITIES' SPECIFICATIONS OR THE GEOTECHNICAL REPORT. THE MORE RESTRICTIVE REQUIREMENTS SHALL APPLY.
   - PREPARATION OF THE SUBGRADE FOR PAVING WITHIN RIGHT-OF-WAY, ACCESS EASEMENTS AND/OR FIRE LANES SHALL NOT BE INITIATED UNTIL ALL TESTING OF UNDERGROUND UTILITIES HAS BEEN COMPLETED AND VERIFIED TO MEET THE GOVERNING AUTHORITIES' SPECIFICATIONS AND AUTHORIZATION TO PROCEED HAS BEEN RECEIVED FROM THE INSPECTOR.
   - PAVEMENT SUBGRADE SHALL NOT BE ALLOWED TO RETAIN WATER. WET MATERIAL SHALL BE REMOVED TO DRY, SOUND MATERIAL AND APPROPRIATE DENSITY ACHIEVED PRIOR TO PAVING OPERATIONS.
8. **PROOF-ROLL SUBGRADE:** THE SUBGRADE SHALL BE PROOF-ROLLED WITH HEAVY PNEUMATIC EQUIPMENT. ANY SOFT OR PUMPING AREAS SHALL BE EXCAVATED TO FIRM SUBGRADE AND BACKFILLED AND RE-COMPACTED IN CONFORMANCE WITH THE GEOTECHNICAL REPORT.
9. **LIME/CEMENT STABILIZED SUBGRADE:** IF REQUIRED FOR PAVEMENT SUBGRADE TREATMENT PER THE GEOTECHNICAL REPORT, HYDRATED LIME SHALL MEET THE REQUIREMENTS OF TXDOT ITEM 260, LIME TREATMENT USED AS SUBGRADE. LIME SHALL BE APPLIED AT THE MINIMUM RATE OF 8% BY DRY WEIGHT, THOROUGHLY MIXED AND BLENDED WITH THE TOP 6 INCHES OF SUBGRADE AND UNIFORMLY COMPACTED TO A MINIMUM OF 95% OF THE STANDARD PROCTOR (ASTM D698) DETERMINED BY THAT TEST. THE ACTUAL AMOUNT OF LIME REQUIRED SHOULD BE CONFIRMED BY ADDITIONAL LABORATORY TESTS PRIOR TO CONSTRUCTION. LIME STABILIZATION SHALL EXTEND AT LEAST 1 FOOT BEYOND THE EDGE OF THE PAVEMENT AREA. IT SHOULD BE PROTECTED AND MAINTAINED IN A MOIST CONDITION UNTIL THE PAVEMENT IS PLACED.
10. **SAND CUSHION PROHIBITED:** THE USE OF "LEVEL UP" SAND CUSHION UNDER PAVEMENT, INCLUDING SIDEWALKS, IS STRICTLY PROHIBITED.
11. **PAVEMENT REMOVAL:** BREAKOUTS FOR REMOVAL OF EXISTING PAVEMENT AND CURBS SHALL BE MADE BY A FULL-DEPTH SAWCUT WHEN ADJACENT TO PROPOSED PAVING AND/OR CURBS.
12. **CONNECTION TO EXISTING PAVEMENT:** IN ALL INSTANCES WHERE THE CONTRACTOR CONNECTS PROPOSED CONCRETE PAVEMENT TO EXISTING CONCRETE PAVEMENT, AT LEAST 15-INCHES OF REINFORCING STEEL SHALL BE EXPOSED FROM THE EXISTING CONCRETE PAVEMENT, OR THE CONTRACTOR SHALL PROVIDE HORIZONTAL DOWEL BARS PER THE DETAILS. PROPOSED CONCRETE CURBS SHALL MATCH ELEVATIONS OF EXISTING CURB.
13. **TESTING:** SAMPLES FOR STRENGTH TESTS OF THE CONCRETE PAVEMENT WILL BE TAKEN BY THE GEOTECHNICAL ENGINEER TO VERIFY DESIGN STRENGTH. PAVEMENT AREAS FOUND TO BE DEFICIENT IN STRENGTH SHALL BE REMOVED AND REPLACED SOLELY AT THE EXPENSE OF THE CONTRACTOR. THE GEOTECHNICAL ENGINEER SHALL ALSO RANDOMLY CORE THE PAVEMENT TO VERIFY THE THICKNESS OF CONCRETE. ANY AREA FOUND TO BE DEFICIENT IN THICKNESS SHALL BE REMOVED AND REPLACED SOLELY AT THE EXPENSE OF THE CONTRACTOR.
14. **SIDEWALKS AND RAMPS:** CONSTRUCTION OF SIDEWALKS, WHEELCHAIR RAMPS AND ACCESSIBLE ROUTES SHALL BE IN ACCORDANCE WITH THE AMERICANS DISABILITY ACT (ADA) OR TAS.
   - SLOPED SIDEWALKS ADJACENT TO BUILDING SHALL NOT HAVE SLOPES GREATER THAN 5% OR 1:20 ALONG THE TRAVEL PATH AND A MAX 2% CROSS FALL. NO RAMPS SHALL BE USED ADJACENT TO BUILDING.
15. **PAVEMENT MARKINGS:** CONCRETE FOR HANDICAP RAMPS SHALL BE COLOR CONDITIONED "TILE RED" WITH A COLORING ADD MIXTURE SPECIFICALLY FOR USE IN CONCRETE. CONTRACTOR SHALL USE CHROMIX ADD MIXTURES OR EQUIVALENT, AS MANUFACTURED BY L.M. SCHOFIELD STAIN COMPANY AT ALL SIDEWALKS AS NOTED ON PLAN.
   - PAVEMENT MARKINGS SHALL BE PROVIDED IN ACCORDANCE WITH THE 2011 TEXAS "UNIFORM TRAFFIC MANUAL FOR PAVEMENT MARKINGS". FIRE LANES SHALL BE STRIPED IN ACCORDANCE WITH THE GOVERNING AUTHORITIES' REQUIREMENTS. REFER TO THE DIMENSION CONTROL PLAN FOR EXACT PLACEMENT. ALL HANDICAP SYMBOLS, SIGNAGE AND PAVEMENT MARKINGS SHALL COMPLY WITH ADA AND THE TAS STANDARDS. ALL PARKING SPACES SHOWN ON PROPOSED CONSTRUCTION SHALL BE MARKED WITH 4-INCH WIDE WHITE PAINTED PAVEMENT STRIPING.
16. **IRRIGATION CONDUIT:** ALL IRRIGATION CONDUIT AND SLEEVES SHALL BE TWO 4-INCH SCHEDULE 40 PVC, INSTALLED WITH A MINIMUM OF 24-INCHES OF COVER. REFERENCE THE PAVING PLAN AND/OR LANDSCAPE PLANS FOR NUMBER OF CONDUITS, SIZE AND LOCATIONS OF PROPOSED IRRIGATION CONDUITS AND SLEEVES.
17. **PAVEMENT WARRANTY:** CONTRACTOR WILL PROVIDE A 2-YEAR UNCONDITIONAL MAINTENANCE FREE WARRANTY ON ALL PAVEMENT SURFACES.
18. **PAVEMENT WITHIN TXDOT RIGHT-OF-WAY:** ALL PAVEMENT CONSTRUCTION WITHIN TXDOT RIGHT-OF-WAY SHALL BE IN ACCORDANCE WITH THE LATEST EDITION OF TXDOT STANDARDS AND SPECIFICATIONS. THE ABOVE NOTES PERTAIN TO ALL PAVEMENT LOCATED WITHIN THE PROPERTY BOUNDARY AND SHALL NOT PERTAIN TO CONSTRUCTION OF PAVEMENT WITH IN TXDOT RIGHT-OF-WAY.

NOTES:
REFERENCE SHEET C6.01 FOR DETAILS

!CAUTION!

CONTRACTOR TO CONTACT THE TEXAS ONE-CALL SYSTEM (1-800-344-8377) AT LEAST 48 HOURS PRIOR TO COMMENCING CONSTRUCTION. KFM IS NOT RESPONSIBLE FOR KNOWING ALL EXISTING UTILITIES IN THE PROJECT AREA. IF FILED CONDITIONS DIFFER SIGNIFICANTLY FROM THE LOCATION SHOWN ON THE PLANS THE CONTRACTOR SHALL CONTACT THE PROJECT ENGINEER PRIOR TO PROCEEDING WITH CONSTRUCTION.

811 Know what's below. Call before you dig.

N

0 10 20 40

SCALE 1:20

PAVING LEGEND

- SAWCUT LIMITS
- **EXISTING CONCRETE PAVEMENT**
- **STANDARD DUTY PAVEMENT**
  5" 3,000 PSI REINFORCED CONCRETE PAVEMENT (MINIMUM 4%-6% ENTRAINED AIR) W/ #3 BARS @ 24" O.C.E.W. ON 6" COMPACTED SUBGRADE AT A MINIMUM OF 95% MAXIMUM STANDARD PROCTOR DRY DENSITY (ASTM D-698) WITHIN 0 TO +3 PERCENTAGE POINTS OF OPTIMUM MOISTURE CONTENT.
- **HEAVY DUTY PAVEMENT**
  7" 3,500 PSI REINFORCED CONCRETE PAVEMENT (MINIMUM 4%-6% ENTRAINED AIR) W/ #3 BARS @ 24" O.C.E.W. ON 6" COMPACTED SUBGRADE AT A MINIMUM OF 95% MAXIMUM STANDARD PROCTOR DRY DENSITY (ASTM D-698) WITHIN 0 TO +3 PERCENTAGE POINTS OF OPTIMUM MOISTURE CONTENT.
- **DUMPSTER DUTY PAVEMENT**
  8" 3,500 PSI REINFORCED CONCRETE PAVEMENT (MINIMUM 4%-6% ENTRAINED AIR) W/ #3 BARS @ 24" O.C.E.W. ON 6" COMPACTED SUBGRADE AT A MINIMUM OF 95% MAXIMUM STANDARD PROCTOR DRY DENSITY (ASTM D-698) WITHIN 0 TO +3 PERCENTAGE POINTS OF OPTIMUM MOISTURE CONTENT.
- **PERMEABLE PAVER**
  CONCRETE PAVERS (MIN. 3.1" THICK) ON BEDDING COURSE 2" THICK ASTM NO. 8 OR 9 & 6" ASTM 57 STONE. SEE DETAIL SHEET C6.01.
- **CONCRETE FLATWORK**
  4" 3,500 PSI CONCRETE PAVEMENT W/ #3 BARS @ 18" O.C.E.W. ON 6" COMPACTED SUBGRADE AT A MINIMUM OF 95% MAXIMUM STANDARD PROCTOR DRY DENSITY (ASTM D 698) WITHIN +0 TO +4 PERCENTAGE POINTS OF OPTIMUM MOISTURE CONTENT. LIME CONTENT SHALL BE DETERMINED WITH LIME SERIES PERFORMED BY GEOTECHNICAL ENGINEER.

PAVEMENT JOINTING NOTES

1. **PAVEMENT JOINT LAYOUT:** CONTROL JOINTS SHALL BE INSTALLED AT A MAXIMUM SPACING OF 15 FEET O.C.E.W. EXPANSION JOINTS SHALL BE INSTALLED AT A MAXIMUM SPACING OF 60 FEET. LEVEL UP SAND COURSE WILL NOT BE ALLOWED. IF A PROPOSED PAVEMENT JOINT LAYOUT PLAN HAS BEEN PROVIDED BY THE ENGINEER, THE CONTRACTOR SHALL IMPLEMENT THAT PLAN OR PROVIDE AN ALTERNATE JOINT LAYOUT TO THE ENGINEER FOR REVIEW. IF A PAVEMENT JOINT LAYOUT PLAN HAS NOT BEEN PROVIDED, THE CONTRACTOR WILL BE RESPONSIBLE FOR PREPARATION OF THE PLAN AND SUBMITTAL TO THE ENGINEER FOR REVIEW. THE CONTRACTORS' JOINT LAYOUT PLAN SHALL BE PROVIDED TO THE ENGINEER FOR REVIEW A MINIMUM OF 2 WEEKS PRIOR TO BEGINNING PAVING CONSTRUCTION.
2. **SAW CUTTING:** SAW CUTTING SHALL BE DONE WITHIN EIGHT HOURS OF POUR OR AS SOON AS CONCRETE CAN SUPPORT WEIGHT. THE CONTRACTOR SHALL MARK JOINT LOCATIONS AT THE CENTERLINE OF THE DOWEL LENGTH DURING HIS PAVING OPERATIONS. ALL SAWED JOINTS ARE TO BE TRUE IN ALIGNMENT AND SHALL CONTINUE THROUGH THE CURB. RADIAL JOINTS SHALL BE NO SHORTER THAN 18 INCHES.
3. **JOINT SEALING:** ALL CONSTRUCTION & CONTROL JOINTS SHALL BE SAWN, CLEANED OF DEBRIS, DIRT, DUST, SCALE, CURING COMPOUND AND CONCRETE, BLOWN DRY AND IMMEDIATELY SEALED. JOINT SEALING MATERIAL SHALL BE HOT POURED RUBBER SEALANT OR AN APPROVED EQUAL. SPECIFICATIONS TO BE SUBMITTED TO ENGINEER PRIOR TO PLACEMENT.
4. **ODD SHAPED PANELS:** ODD SHAPED PANELS SHALL BE REINFORCED WITH #3 BARS AT 18 INCHES O.C.E.W. AN ODD SHAPED PANEL IS CONSIDERED TO BE ONE IN WHICH THE SLAB TAPERS TO A SHARP ANGLE WHEN THE LENGTH TO WIDTH RATIO EXCEEDS 3 TO 1 OR WHEN A SLAB IS NEITHER SQUARE NOR RECTANGULAR.
5. **EXPANSION JOINTS:** THE CONTRACTOR SHALL PROVIDE AN EXPANSION JOINT AROUND THE PERIMETER OF ANY BLOCKOUT IN THE CONCRETE PAVING.

BENCHMARKS

1. **BM#1:** THE SITE BENCHMARK IS A MAG NAIL WITH METAL WASHER STAMPED "JPH LAND SURVEYING" SET IN A CONCRETE CURB LINE, LOCATED APPROXIMATELY 68 FEET NORTHEASTERLY FROM A "+" CUT IN CONCRETE FOUND AT THE NORTHWEST CORNER OF THE SURVEYED PROPERTY.

ELEVATION = 643.34' (NAVD'88)
VERTICAL DATUM:

KFM ENGINEERING & DESIGN
621 N. MAIN STREET, SUITE 415
GRAPEVINE, TEXAS 76051
PHONE: (817) 416-4536
WWW.KFM-LLC.COM
TBPE #: F-20821

ISSUE:	DESCRIPTION:	DATE:
1	ISSUE FOR CONSTRUCTION	7/13/20

DELTA:	DESCRIPTION:	DATE:
5	DUMPSTER & DOORS	9/28/2020

CLIENT: CA LUCAS LLC

PROJECT: LOT 4 - WAL-MART LUCAS

SHEET TITLE: PAVING PLAN

STATE OF TEXAS
DAVID M. PITCHER
134245
LICENSED
PROFESSIONAL ENGINEER
7/13/2020

PROJECT NUMBER: 010011001

DRAWN BY: ALM | DESIGNED BY: DMP | CHECKED BY: JAM

DATE: 2020/07/13

SHEET: C6.00

K:\Projects\010011001\cad\sheet\010011001_pav01-AMCDANIEL-7/1/2020 10:45 AM

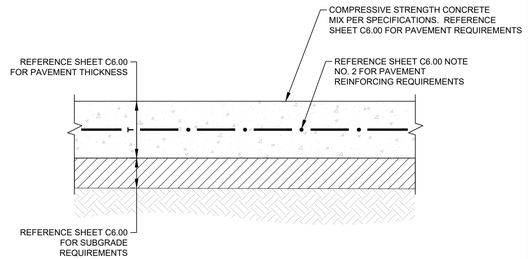

C6.01-01 TYPICAL PAVEMENT SECTION

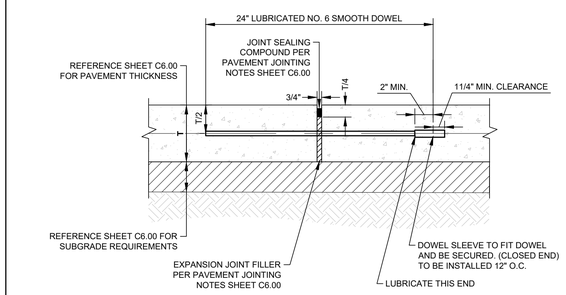

NOTE:
1. NO. 5 SMOOTH DOWEL BAR MAY BE USED IN 5 INCH AND 6 INCH PAVEMENT THICKNESS.
2. LONGITUDINAL BUTT CONSTRUCTION MAY BE UTILIZED IN PLACE OF LONGITUDINAL HINGED (KEYWAY) JOINT AT CONTRACTORS OPTION.
3. DOWEL BARS SHALL BE DRILLED INTO PAVEMENT HORIZONTALLY BY USE OF A MECHANICAL EQUIPMENT.
4. DRILLING BY HAND IS NOT ACCEPTABLE, PUSHING DOWEL BARS INTO WET CONCRETE IS NOT ACCEPTABLE.

C6.01-02 EXPANSION JOINT

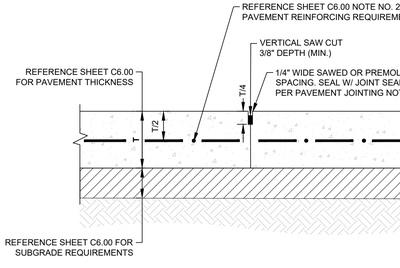

C6.01-03 CONTROL JOINT

T	DOWEL DIAMETER
5"	#3 (3/8")
6"	#4 (1/2")
7"	#5 (5/8")
8"	#6 (3/4")

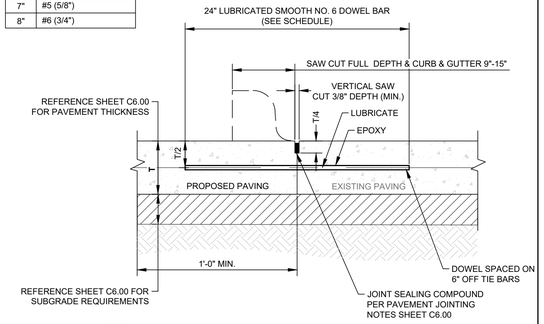

NOTE:
1. DOWELS MUST BE PERPENDICULAR TO PAVEMENT.
2. LONGITUDINAL BUTT CONSTRUCTION MAY BE UTILIZED IN PLACE OF LONGITUDINAL HINGED (KEYWAY) JOINT AT CONTRACTORS OPTION.
3. DOWEL BARS SHALL BE DRILLED & EPOXIED INTO PAVEMENT HORIZONTALLY BY USE OF MECHANICAL EQUIP.
4. PUSHING DOWEL BARS INTO WET CONCRETE IS NOT ACCEPTABLE.

C6.01-04 LONGITUDINAL BUTT JOINT

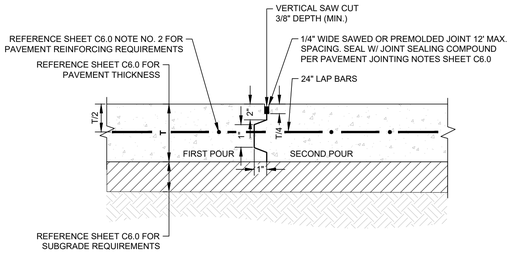

C6.01-05 KEYED CONSTRUCTION JOINT

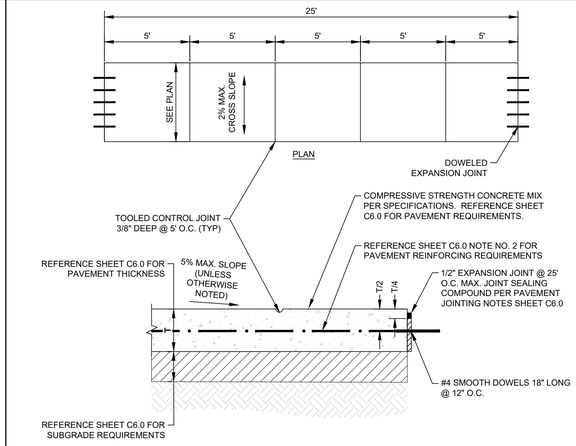

C6.01-06 PRIVATE TYPICAL CONCRETE SIDEWALK

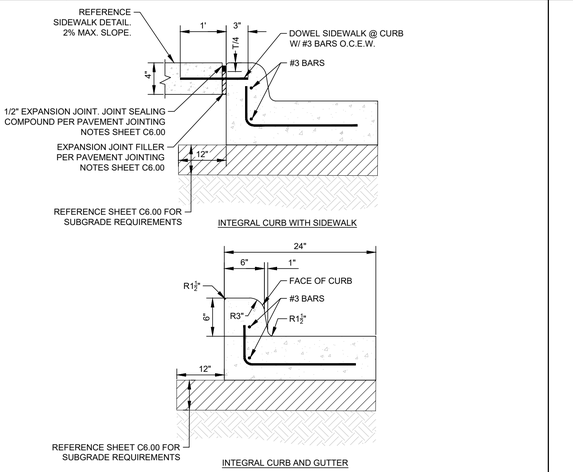

C6.01-07 INTEGRAL CURB & GUTTER

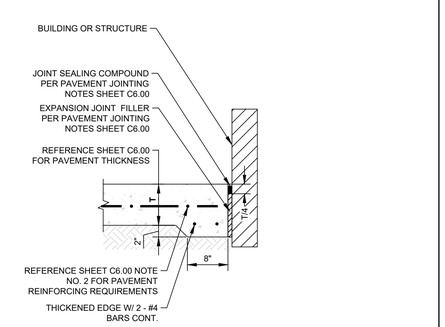

C6.01-08 ISOLATION JOINT @ STRUCTURE

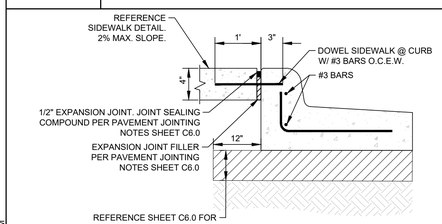

C6.01-09 TYPICAL SPILLING CURB & GUTTER

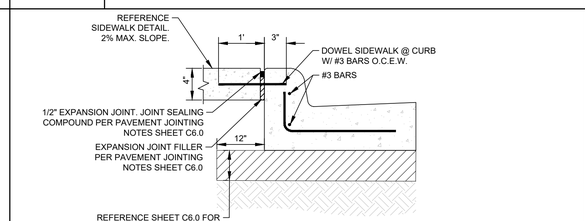

C6.01-10 TYPICAL CATCHING CURB & GUTTER

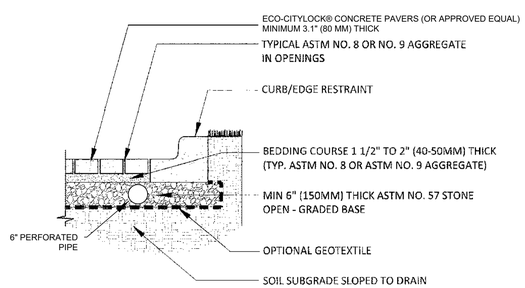

C6.01-11 PERMEABLE PAVERS TREATMENT

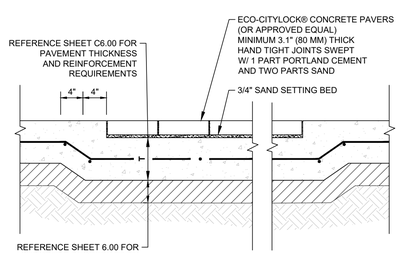

C6.01-12 PAVER CROSSWALK DETAIL - VEHICULAR

KFM ENGINEERING & DESIGN
621 N. MAIN STREET, SUITE 415
GRAPEVINE, TEXAS 76051
PHONE: (817) 416-4536
WWW.KFM-LLC.COM
TBPE #: F-20821

ISSUE:	DESCRIPTION:	DATE:
1	ISSUE FOR CONSTRUCTION	7/13/20

DELTA:	DESCRIPTION:	DATE:
5	PAVER CROSSWALK	9/8/2020

CLIENT: CA LUCAS LLC

PROJECT: LOT 4 - WAL-MART LUCAS

SHEET TITLE: PAVING PLAN DETAILS

STATE OF TEXAS
DAVID M. PITCHER
134245
LICENSED
PROFESSIONAL ENGINEER
7/13/2020

PROJECT NUMBER: 010011001

DRAWN BY: ALM | DESIGNED BY: DMP | CHECKED BY: JAM

DATE: 2020/07/13

SHEET: C6.01

K:\Projects\010011001\cad\sheet\010011001_pw01-DPITCHER-8/8/2020 1:06 PM

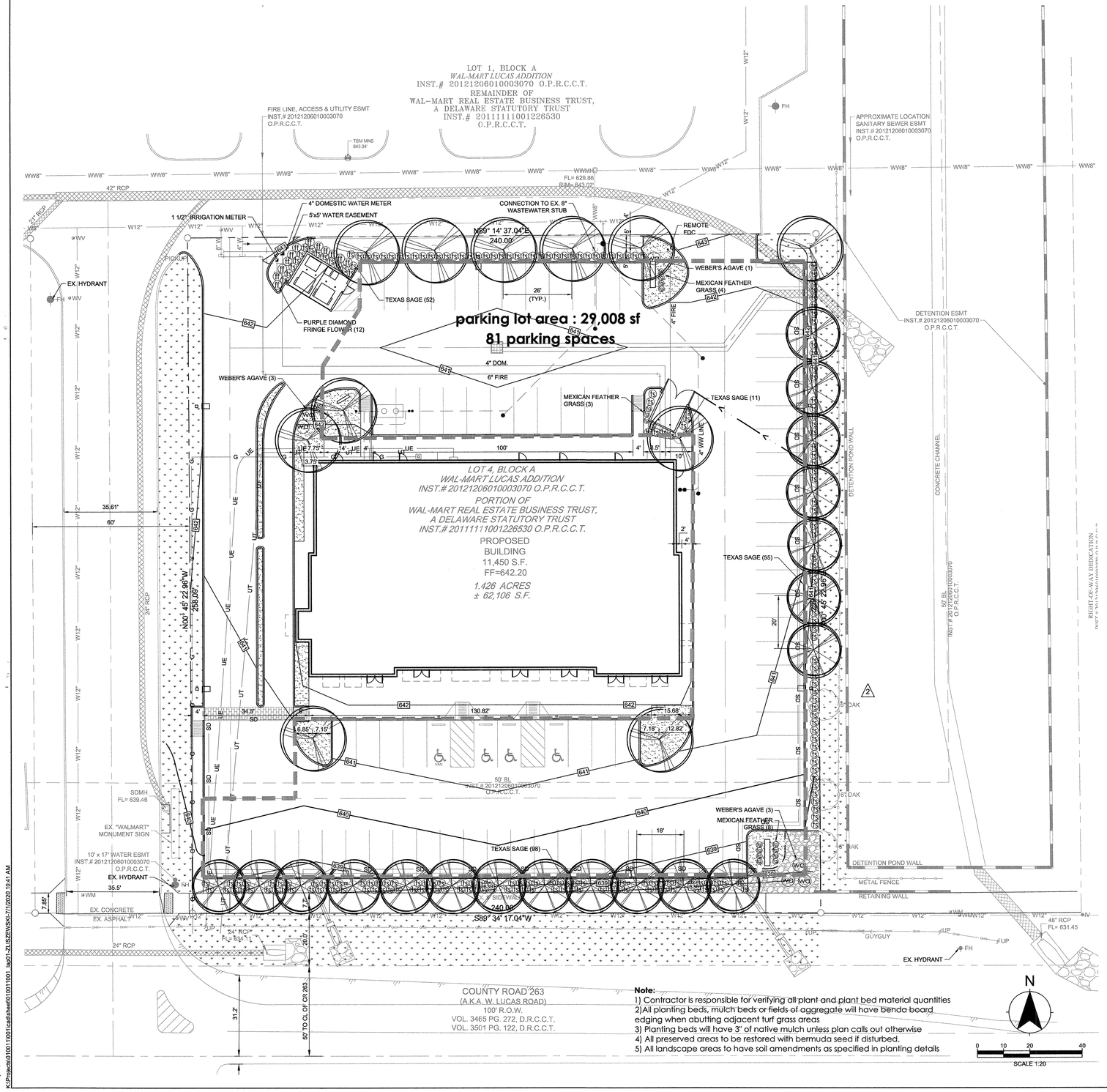

Note:
1) Contractor is responsible for verifying all plant and plant bed material quantities
2)All planting beds, mulch beds or fields of aggregate will have benda board edging when abutting adjacent turf grass areas
3) Planting beds will have 3" of native mulch unless plan calls out otherwise
4) All preserved areas to be restored with bermuda seed if disturbed.
5) All landscape areas to have soil amendments as specified in planting details

trees

symbol	count	species	specifications
	11	Live Oak *quercus virginiana*	4" caliper, minimum 10' height, full canopy
	19	Bald Cypress *taxodium distichum*	4" caliper, minimum 10' height, full canopy

shrubs/succulents/grasses

symbol	count	species	specifications
wa	7	Weber's Agave *agave weberi*	15g, 24" rosette width minimum, spacing per plan
ff	12	Purple Diamond® Fringe Flower *loropetalum chinense 'shang-hi'*	5g, 2' on center
ts	221	Texas Sage 'Green Cloud' *leucophyllum frutescens 'green cloud'*	5g, 3' on center. 4' height minimum
fg	3	Mexican Feather Grass *nassella tenuissima*	1g, 18" on center, ref. details

groundcovers/native seed mixes

symbol	count	species	specifications
	x *sf*	Common Bermuda *seed*	ref. seedsource.com for seeding rates/ instructions

planting bed material

	x *sf*	decomposed granite	4" thick, compacted every inch
n/a	x *sf*	hardwood mulch	use for all planting beds when plan does not specify, ref. details & notes
	x *sf*	landscape cobble rock *brown creek rock & boulder*	sourced from alpine materials alpinematerials.com 817.685.2448
	x *lf*	benda board edging	color - sand , 1" x 4"

landscape tabulations

gross landscape area

Minimum 15% of lot area to be landscaped - total lot area 62,106 sf

required 9,316 sf provided 17,769 sf

parking lot interior landscaping

1 tree required per 10 parking spaces - 92 spaces

required 10 provided 5

Interior planting area for 29,008 sf lot

required 5% (1451sf) provided 5.7% (1644sf)

parking lot perimeter landscaping

1 tree and 8 shrubs required for every 20' linear feet - 325' linear feet

required 17 trees provided 17 trees

required 130 shrubs provided 130 shrubs

landscape edge - west lucas road

1 tree and 8 shrubs required for every 20' linear feet - 240' linear feet

required 12 trees provided 12 trees

required 96 shrubs provided 96 shrubs

KFM ENGINEERING & DESIGN
621 N. MAIN STREET, SUITE 415
GRAPEVINE, TEXAS 76051
PHONE: (817) 416-4536
WWW.KFM-LLC.COM
TBPE #: F-20821

ISSUE:	DESCRIPTION:	DATE:
1	ISSUE FOR CONSTRUCTION	7/13/20

	DELTA:	DESCRIPTION:	DATE:

CLIENT CA LUCAS LLC

PROJECT LOT 4 - WAL-MART LUCAS
LOT 4, BLOCK A
WAL-MART LUCAS ADDITION

SHEET TITLE LANDSCAPE PLAN

REGISTERED LANDSCAPE ARCHITECT
NATHAN R. PAGE
3237
STATE OF TEXAS
07/13/2020

PROJECT NUMBER: 010011001

DRAWN BY: ALM | DESIGNED BY: DMP | CHECKED BY: JAM

DATE: 2020/07/13

SHEET: L1.00

K:\Projects\010011001\cad\sheet\010011001_lap01.ZL:\EZEVNSK\ 7/1/2020 10:01 AM

PLANTING - GENERAL

1.1 VERIFICATION

A. ALL SCALED DIMENSIONS ON THE DRAWINGS ARE APPROXIMATE. BEFORE PROCEEDING WITH ANY WORK, THE CONTRACTOR SHALL CAREFULLY CHECK AND VERIFY ALL DIMENSIONS AND QUANTITIES, AND SHALL IMMEDIATELY INFORM THE OWNER'S REPRESENTATIVE OF ANY DISCREPANCIES BETWEEN THE INFORMATION ON THE DRAWINGS AND THE ACTUAL CONDITIONS, REFRAINING FROM DOING ANY WORK IN SAID AREAS UNTIL GIVEN APPROVAL TO DO SO BY THE OWNER'S REPRESENTATIVE.

B. IN THE CASE OF A DISCREPANCY IN THE PLANT QUANTITIES BETWEEN THE PLAN DRAWINGS AND THE PLANT CALL OUTS, LIST OR PLANT SCHEDULE, THE NUMBER OF PLANTS OR SQUARE FOOTAGE OF THE PLANTING BED ACTUALLY DRAWN ON THE PLAN DRAWINGS SHALL BE DEEMED CORRECT AND PREVAIL.

1.2 PERMITS AND REGULATIONS

A. THE CONTRACTOR SHALL OBTAIN AND PAY FOR ALL PERMITS RELATED TO THIS SECTION OF THE WORK UNLESS PREVIOUSLY EXCLUDED UNDER PROVISION OF THE CONTRACT OR GENERAL CONDITIONS. THE CONTRACTOR SHALL COMPLY WITH ALL LAWS AND ORDINANCES BEARING ON THE OPERATION OR CONDUCT OF THE WORK AS DRAWN AND SPECIFIED. IF THE CONTRACTOR OBSERVES THAT A CONFLICT EXISTS BETWEEN PERMIT REQUIREMENTS AND THE WORK OUTLINED IN THE CONTRACT DOCUMENTS, THE CONTRACTOR SHALL PROMPTLY NOTIFY THE OWNER'S REPRESENTATIVE IN WRITING INCLUDING A DESCRIPTION OF ANY NECESSARY CHANGES AND CHANGES TO THE CONTRACT PRICE RESULTING FROM CHANGES IN THE WORK.

B. WHEREVER REFERENCES ARE MADE TO STANDARDS OR CODES IN ACCORDANCE WITH WHICH WORK IS TO BE PERFORMED OR TESTED, THE EDITION OR REVISION OF THE STANDARDS AND CODES CURRENT ON THE EFFECTIVE DATE OF THIS CONTRACT SHALL APPLY, UNLESS OTHERWISE EXPRESSLY SET FORTH.

C. IN CASE OF CONFLICT AMONG ANY REFERENCED STANDARDS OR CODES OR BETWEEN ANY REFERENCED STANDARDS AND CODES AND THE SPECIFICATIONS, THE MORE RESTRICTIVE STANDARD SHALL APPLY OR OWNER'S REPRESENTATIVE SHALL DETERMINE WHICH SHALL GOVERN.

1.3 PROTECTION OF WORK, PROPERTY AND PERSON

A. THE CONTRACTOR SHALL ADEQUATELY PROTECT THE WORK, ADJACENT PROPERTY, AND THE PUBLIC, AND SHALL BE RESPONSIBLE FOR ANY DAMAGES OR INJURY DUE TO HIS/HER ACTIONS.

1.4 CHANGES IN THE WORK

A. THE OWNER'S REPRESENTATIVE MAY ORDER CHANGES IN THE WORK, AND THE CONTRACT SUM SHOULD BE ADJUSTED ACCORDINGLY. ALL SUCH ORDERS AND ADJUSTMENTS PLUS CLAIMS BY THE CONTRACTOR FOR EXTRA COMPENSATION MUST BE MADE AND APPROVED IN WRITING BEFORE EXECUTING THE WORK INVOLVED.

B. ALL CHANGES IN THE WORK, NOTIFICATIONS AND CONTRACTOR'S REQUEST FOR INFORMATION (RFI) SHALL CONFORM TO THE CONTRACT GENERAL CONDITION REQUIREMENTS.

1.5 CORRECTION OF WORK

A. THE CONTRACTOR, AT THEIR OWN COST, SHALL RE-EXECUTE ANY WORK THAT FAILS TO CONFORM TO THE REQUIREMENTS OF THE CONTRACT AND SHALL REMEDY DEFECTS DUE TO FAULTY MATERIALS OR WORKMANSHIP UPON WRITTEN NOTICE FROM THE OWNER'S REPRESENTATIVE, AT THE SOONEST AS POSSIBLE TIME THAT CAN BE COORDINATED WITH OTHER WORK AND SEASONAL WEATHER DEMANDS.

1.6 OBSERVATION OF THE WORK\

A. THE OWNER'S REPRESENTATIVE MAY OBSERVE THE WORK AT ANY TIME. THEY MAY REMOVE SAMPLES OF MATERIALS FOR CONFORMITY TO SPECIFICATIONS. REJECTED MATERIALS SHALL BE IMMEDIATELY REMOVED FROM THE SITE AND REPLACED AT THE CONTRACTOR'S EXPENSE. THE COST OF TESTING MATERIALS NOT MEETING SPECIFICATIONS SHALL BE PAID BY THE CONTRACTOR.

B. THE OWNER'S REPRESENTATIVE SHALL BE INFORMED OF THE PROGRESS OF THE WORK SO THE WORK MAY BE OBSERVED AT THE FOLLOWING KEY TIMES IN THE CONSTRUCTION PROCESS. THE OWNER'S REPRESENTATIVE SHALL BE AFFORDED SUFFICIENT TIME TO SCHEDULE VISIT TO THE SITE. FAILURE OF THE OWNER'S REPRESENTATIVE TO MAKE FIELD OBSERVATIONS SHALL NOT RELIEVE THE CONTRACTOR FROM MEETING ALL THE REQUIREMENTS OF THIS SPECIFICATION.

1. PLANT QUALITY: REVIEW OF PLANT QUALITY AT THE TIME OF DELIVERY AND PRIOR TO INSTALLATION. REVIEW TREE QUALITY PRIOR TO UNLOADING WHERE POSSIBLE, BUT IN ALL CASES PRIOR TO PLANTING.
2. COMPLETION OF THE PLANTING: REVIEW THE COMPLETED PLANTING.

1.7 QUALITY ASSURANCE

A. SUBSTANTIAL COMPLETION ACCEPTANCE - ACCEPTANCE OF THE WORK PRIOR TO THE START OF THE WARRANTY PERIOD:

1. ONCE THE CONTRACTOR COMPLETES THE INSTALLATION OF ALL ITEMS IN THIS SECTION, THE OWNER'S REPRESENTATIVE WILL OBSERVE ALL WORK FOR SUBSTANTIAL COMPLETION ACCEPTANCE UPON WRITTEN REQUEST OF THE CONTRACTOR. THE REQUEST SHALL BE RECEIVED AT LEAST TEN CALENDAR DAYS BEFORE THE ANTICIPATED DATE OF THE OBSERVATION.
2. SUBSTANTIAL COMPLETION ACCEPTANCE BY THE OWNER'S REPRESENTATIVE SHALL BE FOR GENERAL CONFORMANCE TO SPECIFIED SIZE, CHARACTER AND QUALITY AND NOT RELIEVE THE CONTRACTOR OF RESPONSIBILITY FOR FULL CONFORMANCE TO THE CONTRACT DOCUMENTS, INCLUDING CORRECT SPECIES.
3. ANY PLANTS THAT ARE DEEMED DEFECTIVE AS DEFINED UNDER THE PROVISIONS BELOW SHALL NOT BE ACCEPTED.

B. THE OWNER'S REPRESENTATIVE WILL PROVIDE THE CONTRACTOR WITH WRITTEN ACKNOWLEDGMENT OF THE DATE OF SUBSTANTIAL COMPLETION ACCEPTANCE AND THE BEGINNING OF THE WARRANTY PERIOD AND PLANT MAINTENANCE PERIOD (IF PLANT MAINTENANCE IS INCLUDED).

C. CONTRACTOR'S QUALITY ASSURANCE RESPONSIBILITIES: THE CONTRACTOR IS SOLELY RESPONSIBLE FOR QUALITY CONTROL OF THE WORK.

1.8 PLANT WARRANTY

A. PLANT WARRANTY:

1. THE CONTRACTOR AGREES TO REPLACE DEFECTIVE WORK AND DEFECTIVE PLANTS. THE OWNER'S REPRESENTATIVE SHALL MAKE THE FINAL DETERMINATION IF PLANTS MEET THESE SPECIFICATIONS OR THAT PLANTS ARE DEFECTIVE. PLANTS WARRANTY SHALL BEGIN ON THE DATE OF SUBSTANTIAL COMPLETION ACCEPTANCE AND CONTINUE FOR THE FOLLOWING PERIODS, CLASSED BY PLANT TYPE:
   a) TREES - 1 YEAR(S).
   b) SHRUBS - 1 YEAR(S)
2. WHEN THE WORK IS ACCEPTED IN PARTS, THE WARRANTY PERIODS SHALL EXTEND FROM EACH OF THE PARTIAL SUBSTANTIAL COMPLETION ACCEPTANCES TO THE TERMINAL DATE OF THE LAST WARRANTY PERIOD. THUS, ALL WARRANTY PERIODS FOR EACH CLASS OF PLANT WARRANTY, SHALL TERMINATE AT ONE TIME.
3. ALL PLANTS SHALL BE WARRANTIED TO MEET ALL THE REQUIREMENTS FOR PLANT QUALITY AT INSTALLATION IN THIS SPECIFICATION. DEFECTIVE PLANTS SHALL BE DEFINED AS PLANTS NOT MEETING THESE REQUIREMENTS. THE OWNER'S REPRESENTATIVE SHALL MAKE THE FINAL DETERMINATION THAT PLANTS ARE DEFECTIVE.
4. PLANTS DETERMINED TO BE DEFECTIVE SHALL BE REMOVED IMMEDIATELY UPON NOTIFICATION BY THE OWNER'S REPRESENTATIVE AND REPLACED WITHOUT COST TO THE OWNER, AS SOON AS WEATHER CONDITIONS PERMIT AND WITHIN THE SPECIFIED PLANTING PERIOD.
5. THE CONTRACTOR IS EXEMPT FROM REPLACING PLANTS, AFTER SUBSTANTIAL COMPLETION ACCEPTANCE AND DURING THE WARRANTY PERIOD, THAT ARE REMOVED BY OTHERS, LOST OR DAMAGED DUE TO OCCUPANCY OF PROJECT, LOST OR DAMAGED BY A THIRD PARTY, VANDALISM, OR ANY NATURAL DISASTER.
6. REPLACEMENTS SHALL CLOSELY MATCH ADJACENT SPECIMENS OF THE SAME SPECIES. REPLACEMENTS SHALL BE SUBJECT TO ALL REQUIREMENTS STATED IN THIS SPECIFICATION. MAKE ALL NECESSARY REPAIRS DUE TO PLANT REPLACEMENTS. SUCH REPAIRS SHALL BE DONE AT NO EXTRA COST TO THE OWNER.
7. THE WARRANTY OF ALL REPLACEMENT PLANTS SHALL EXTEND FOR AN ADDITIONAL ONE-YEAR PERIOD FROM THE DATE OF THEIR ACCEPTANCE AFTER REPLACEMENT. IN THE EVENT THAT A REPLACEMENT PLANT IS NOT ACCEPTABLE DURING OR AT THE END OF THE SAID EXTENDED WARRANTY PERIOD, THE OWNER'S REPRESENTATIVE MAY ELECT ONE MORE REPLACEMENT ITEMS OR CREDIT FOR EACH ITEM. THESE TERTIARY REPLACEMENT ITEMS ARE NOT PROTECTED UNDER A WARRANTY PERIOD.

B. END OF WARRANTY FINAL ACCEPTANCE - ACCEPTANCE OF PLANTS AT THE END OF THE WARRANTY PERIOD.

C. AT THE END OF THE WARRANTY PERIOD, THE OWNER'S REPRESENTATIVE SHALL OBSERVE ALL WARRANTED WORK, UPON WRITTEN REQUEST OF THE CONTRACTOR. THE REQUEST SHALL BE RECEIVED AT LEAST TEN CALENDAR DAYS BEFORE THE ANTICIPATED DATE FOR FINAL OBSERVATION.

1.9 SELECTION AND OBSERVATION OF PLANTS

A. THE OWNER'S REPRESENTATIVE MAY REVIEW ALL PLANTS SUBJECT TO APPROVAL OF SIZE, HEALTH, QUALITY, CHARACTER, ETC. REVIEW OR APPROVAL OF ANY PLANT DURING THE PROCESS OF SELECTION, DELIVERY, INSTALLATION AND ESTABLISHMENT PERIOD SHALL NOT PREVENT THAT PLANT FROM LATER REJECTION IN THE EVENT THAT THE PLANT QUALITY CHANGES OR PREVIOUSLY EXISTING DEFECTS BECOME APPARENT THAT WERE NOT OBSERVED.

B. PLANT SELECTION: THE OWNER'S REPRESENTATIVE RESERVES THE RIGHT TO SELECT AND OBSERVE ALL PLANTS AT THE NURSERY PRIOR TO DELIVERY AND TO REJECT PLANTS THAT DO NOT MEET SPECIFICATIONS AS SET FORTH IN THIS SPECIFICATION. IF A PARTICULAR DEFECT OR SUBSTANDARD ELEMENT CAN BE CORRECTED AT THE NURSERY, AS DETERMINED BY THE OWNER'S REPRESENTATIVE, THE AGREED UPON REMEDY MAY BE APPLIED BY THE NURSERY OR THE CONTRACTOR PROVIDED THAT THE CORRECTION ALLOWS THE PLANT TO MEET THE REQUIREMENTS SET FORTH IN THIS SPECIFICATION. ANY WORK TO CORRECT PLANT DEFECTS SHALL BE AT THE CONTRACTOR'S EXPENSE.

1. THE OWNER'S REPRESENTATIVE MAY MAKE INVASIVE OBSERVATION OF THE PLANT'S ROOT SYSTEM IN THE AREA OF THE ROOT COLLAR AND THE TOP OF THE ROOT BALL IN GENERAL IN ORDER TO DETERMINE THAT THE PLANT MEETS THE QUALITY REQUIREMENTS FOR DEPTH OF THE ROOT COLLAR AND PRESENCE OF ROOTS ABOVE THE ROOT COLLAR. SUCH OBSERVATIONS WILL NOT HARM THE PLANT.
2. CORRECTIONS ARE TO BE UNDERTAKEN AT THE NURSERY PRIOR TO SHIPPING.

C. THE CONTRACTOR SHALL BEAR ALL COST RELATED TO PLANT CORRECTIONS.

D. ALL PLANTS THAT ARE REJECTED SHALL BE IMMEDIATELY REMOVED FROM THE SITE AND ACCEPTABLE REPLACEMENT PLANTS PROVIDED AT NO COST TO THE OWNER.

E. SUBMIT TO THE OWNER'S REPRESENTATIVE, FOR APPROVAL, PLANT SOURCES INCLUDING THE NAMES AND LOCATIONS OF NURSERIES PROPOSED AS SOURCES OF ACCEPTABLE PLANTS, AND A LIST OF THE PLANTS THEY WILL PROVIDE. THE PLANT LIST SHALL INCLUDE THE BOTANICAL AND COMMON NAME AND THE SIZE AT THE TIME OF SELECTION. OBSERVE ALL NURSERY MATERIALS TO DETERMINE THAT THE MATERIALS MEET THE REQUIREMENTS OF THIS SECTION.

F. TREES SHALL BE PURCHASED FROM THE GROWING NURSERY. RE-WHOLESALE PLANT SUPPLIERS SHALL NOT BE USED AS SOURCES UNLESS THE CONTRACTOR CAN CERTIFY THAT THE REQUIRED TREES ARE NOT DIRECTLY AVAILABLE FROM A GROWING NURSERY. WHEN RE-WHOLESALE SUPPLIERS ARE UTILIZED, THE CONTRACTOR SHALL SUBMIT THE NAME AND LOCATION OF THE GROWING NURSERY FROM WHERE THE TREES WERE OBTAINED BY THE RE-WHOLESALE SELLER. THE RE-WHOLESALE NURSERY SHALL BE RESPONSIBLE FOR ANY REQUIRED PLANT QUALITY CERTIFICATIONS. EACH TREE SHALL HAVE A NUMBERED SEAL APPLIED BY THE CONTRACTOR. THE SEAL SHALL BE PLACED ON A LATERAL BRANCH ON THE NORTH SIDE OF THE TREE. THE SEAL SHALL BE A TAMPER PROOF PLASTIC SEAL BEARING THE CONTRACTORS NAME AND A UNIQUE SEVEN-DIGIT NUMBER EMBOSSED ON THE SEAL.

G. THE OWNER'S REPRESENTATIVE MAY CHOOSE TO ATTACH THEIR SEAL TO EACH PLANT, OR A REPRESENTATIVE SAMPLE. VIEWING AND/OR SEALING OF PLANTS BY THE OWNER'S REPRESENTATIVE AT THE NURSERY DOES NOT PRECLUDE THE OWNER'S REPRESENTATIVE'S RIGHT TO REJECT MATERIAL WHILE ON SITE. THE CONTRACTOR IS RESPONSIBLE FOR PAYING ANY UP CHARGE FOR THE OWNER'S REPRESENTATIVE TO ATTACH THEIR SEAL TO SPECIFIC PLANTS.

H. WHERE REQUESTED BY THE OWNER'S REPRESENTATIVE, SUBMIT PHOTOGRAPHS OF PLANTS OR REPRESENTATIVE SAMPLES OF PLANTS. PHOTOGRAPHS SHALL BE LEGIBLE AND CLEARLY DEPICT THE PLANT SPECIMEN. EACH SUBMITTED IMAGE SHALL CONTAIN A HEIGHT REFERENCE, SUCH AS A MEASURING STICK. THE APPROVAL OF PLANTS BY THE OWNER'S REPRESENTATIVE VIA PHOTOGRAPH DOES NOT PRECLUDE THE OWNER'S REPRESENTATIVE'S RIGHT TO REJECT MATERIAL WHILE ON SITE.

1.10 PLANT SUBSTITUTIONS FOR PLANTS NOT AVAILABLE

A. SUBMIT ALL REQUESTS FOR SUBSTITUTIONS OF PLANT SPECIES, OR SIZE TO THE OWNER'S REPRESENTATIVE, FOR APPROVAL, PRIOR TO PURCHASING THE PROPOSED SUBSTITUTION. REQUEST FOR SUBSTITUTION SHALL BE ACCOMPANIED WITH A LIST OF NURSERIES CONTACTED IN THE SEARCH FOR THE REQUIRED PLANT AND A RECORD OF OTHER ATTEMPTS TO LOCATE THE REQUIRED MATERIAL. REQUESTS SHALL ALSO INCLUDE SOURCES OF PLANTS FOUND THAT MAY BE OF A SMALLER OR LARGER SIZE, OR A DIFFERENT SHAPE OR HABIT THAN SPECIFIED, OR PLANTS OF THE SAME GENUS AND SPECIES BUT DIFFERENT CULTIVAR ORIGIN, OR WHICH MAY OTHERWISE NOT MEET THE REQUIREMENTS OF THE SPECIFICATIONS, BUT WHICH MAY BE AVAILABLE FOR SUBSTITUTION.

1.11 SITE CONDITIONS

A. IT IS THE RESPONSIBILITY OF THE CONTRACTOR TO BE AWARE OF ALL SURFACE AND SUB-SURFACE CONDITIONS, AND TO NOTIFY THE OWNER'S REPRESENTATIVE, IN WRITING, OF ANY CIRCUMSTANCES THAT WOULD NEGATIVELY IMPACT THE HEALTH OF PLANTINGS. DO NOT PROCEED WITH WORK UNTIL UNSATISFACTORY CONDITIONS HAVE BEEN CORRECTED.

1. SHOULD SUBSURFACE DRAINAGE OR SOIL CONDITIONS BE ENCOUNTERED WHICH WOULD BE DETRIMENTAL TO GROWTH OR SURVIVAL OF PLANT MATERIAL, THE CONTRACTOR SHALL NOTIFY THE OWNER'S REPRESENTATIVE IN WRITING, STATING THE CONDITIONS AND SUBMIT A PROPOSAL COVERING COST OF CORRECTIONS. IF THE CONTRACTOR FAILS TO NOTIFY THE OWNER'S REPRESENTATIVE OF SUCH CONDITIONS, HE/SHE SHALL REMAIN RESPONSIBLE FOR PLANT MATERIAL UNDER THE WARRANTY CLAUSE OF THE SPECIFICATIONS.

B. IT IS THE RESPONSIBILITY OF THE CONTRACTOR TO BE FAMILIAR WITH THE LOCAL GROWING CONDITIONS, AND IF ANY SPECIFIED PLANTS WILL BE IN CONFLICT WITH THESE CONDITIONS. REPORT ANY POTENTIAL CONFLICTS, IN WRITING, TO THE OWNER'S REPRESENTATIVE.

C. THIS SPECIFICATION REQUIRES THAT ALL PLANTING SOIL AND IRRIGATION (IF APPLICABLE) WORK BE COMPLETED AND ACCEPTED PRIOR TO THE INSTALLATION OF ANY PLANTS.

1. PLANTING OPERATIONS SHALL NOT BEGIN UNTIL SUCH TIME THAT THE IRRIGATION SYSTEM IS COMPLETELY OPERATIONAL FOR THE AREA(S) TO BE PLANTED, AND THE IRRIGATION SYSTEM FOR THAT AREA HAS BEEN PRELIMINARILY OBSERVED AND APPROVED BY THE OWNER'S REPRESENTATIVE.

D. ACTUAL PLANTING SHALL BE PERFORMED DURING THOSE PERIODS WHEN WEATHER AND SOIL CONDITIONS ARE SUITABLE IN ACCORDANCE WITH LOCALLY ACCEPTED HORTICULTURAL PRACTICES.

1. DO NOT INSTALL PLANTS INTO SATURATED OR FROZEN SOILS. DO NOT INSTALL PLANTS DURING INCLEMENT WEATHER, SUCH AS RAIN OR SNOW OR DURING EXTREMELY HOT, COLD OR WINDY CONDITIONS.

1.12 PLANTING AROUND UTILITIES

A. CONTRACTOR SHALL CAREFULLY EXAMINE THE CIVIL, RECORD, AND SURVEY DRAWINGS TO BECOME FAMILIAR WITH THE EXISTING UNDERGROUND CONDITIONS BEFORE DIGGING.

B. DETERMINE LOCATION OF UNDERGROUND UTILITIES AND PERFORM WORK IN A MANNER THAT WILL AVOID POSSIBLE DAMAGE. HAND EXCAVATE, AS REQUIRED. MAINTAIN GRADE STAKES SET BY OTHERS UNTIL PARTIES CONCERNED MUTUALLY AGREE UPON REMOVAL.

PLANTING - PRODUCTS

2.1 PLANTS

A. STANDARDS AND MEASUREMENT: PROVIDE PLANTS OF QUANTITY, SIZE, GENUS, SPECIES, AND VARIETY OR CULTIVARS AS SHOWN AND SCHEDULED IN CONTRACT DOCUMENTS.

1. ALL PLANTS INCLUDING THE ROOT BALL DIMENSIONS OR CONTAINER SIZE TO TRUNK CALIPER RATIO SHALL CONFORM TO ANSI Z60.1 "AMERICAN STANDARD FOR NURSERY STOCK" LATEST EDITION, UNLESS MODIFIED BY PROVISIONS IN THIS SPECIFICATION. WHEN THERE IS A CONFLICT BETWEEN THIS SPECIFICATION AND ANSI Z60.1, THIS SPECIFICATION SECTION SHALL BE CONSIDERED CORRECT.
2. PLANTS LARGER THAN SPECIFIED MAY BE USED IF ACCEPTABLE TO THE OWNER'S REPRESENTATIVE. USE OF SUCH PLANTS SHALL NOT INCREASE THE CONTRACT PRICE. IF LARGER PLANTS ARE ACCEPTED THE ROOT BALL SIZE SHALL BE IN ACCORDANCE WITH ANSI Z-60.1. LARGER PLANTS MAY NOT BE ACCEPTABLE IF THE RESULTING ROOT BALL CANNOT BE FIT INTO THE REQUIRED PLANTING SPACE.
3. IF A RANGE OF SIZE IS GIVEN, NO PLANT SHALL BE LESS THAN THE MINIMUM SIZE AND NOT LESS THAN 50 PERCENT OF THE PLANTS SHALL BE AS LARGE AS THE MAXIMUM SIZE SPECIFIED. THE MEASUREMENTS SPECIFIED ARE THE MINIMUM AND MAXIMUM SIZE ACCEPTABLE AND ARE THE MEASUREMENTS AFTER PRUNING, WHERE PRUNING IS REQUIRED.

B. PROPER IDENTIFICATION: ALL TREES SHALL BE TRUE TO NAME AS ORDERED OR SHOWN ON PLANTING PLANS AND SHALL BE LABELED INDIVIDUALLY OR IN GROUPS BY GENUS, SPECIES, VARIETY AND CULTIVAR.

C. COMPLIANCE: ALL TREES SHALL COMPLY WITH FEDERAL AND STATE LAWS AND REGULATIONS REQUIRING OBSERVATION FOR PLANT DISEASE, PESTS, AND WEEDS. OBSERVATION CERTIFICATES REQUIRED BY LAW SHALL ACCOMPANY EACH SHIPMENT OF PLANTS.

D. PLANT QUALITY:

1. GENERAL: PROVIDE HEALTHY STOCK, GROWN IN A NURSERY AND REASONABLY FREE OF DIE-BACK, DISEASE, INSECTS, EGGS, BORES, AND LARVAE. AT THE TIME OF PLANTING ALL PLANTS SHALL HAVE A ROOT SYSTEM, STEM, AND BRANCH FORM THAT WILL NOT RESTRICT NORMAL GROWTH, STABILITY AND HEALTH FOR THE EXPECTED LIFE OF THE PLANTS.
   a) TREES SHALL HAVE ONE CENTRAL LEADER. IF THE LEADER WAS HEADED, A NEW LEADER (WITH A LIVE TERMINAL BUD) AT LEAST ONE-HALF THE DIAMETER OF THE PRUNING CUT SHALL BE PRESENT.
2. ALL TREES ARE ASSUMED TO HAVE ONE CENTRAL LEADER TREES UNLESS A DIFFERENT FORM IS SPECIFIED IN THE PLANT LIST OR DRAWINGS.
   b) TRUNK CALIPER AND TAPER SHALL BE SUFFICIENT SO THAT THE LOWER FIVE FEET OF THE TRUNK REMAINS VERTICAL WITHOUT A STAKE. AUXILIARY STAKE MAY BE USED TO MAINTAIN A STRAIGHT LEADER IN THE UPPER HALF OF THE TREE.
3. AT TIME OF OBSERVATIONS AND DELIVERY, THE ROOT BALL SHALL BE MOIST THROUGHOUT. ROOTS SHALL NOT SHOW SIGNS OF EXCESS SOIL MOISTURE CONDITIONS AS INDICATED BY STUNTED, DISCOLORED, DISTORTED, OR DEAD ROOTS.

E. SUBMITTALS: SUBMIT FOR APPROVAL THE REQUIRED PLANT QUALITY CERTIFICATIONS FROM THE GROWER WHERE PLANTS ARE TO BE PURCHASED, FOR EACH PLANT TYPE. THE CERTIFICATION MUST STATE THAT EACH PLANT MEETS ALL THE ABOVE PLANT QUALITY REQUIREMENTS.

F. CONTAINER (INCLUDING ABOVE-GROUND FABRIC CONTAINERS AND BOXES) PLANTS

1. CONTAINER PLANTS MAY BE PERMITTED ONLY WHEN INDICATED ON THE DRAWING, IN THIS SPECIFICATION, OR APPROVED BY THE OWNER'S REPRESENTATIVE.
2. PROVIDE PLANTS SHALL BE ESTABLISHED AND WELL ROOTED IN REMOVABLE CONTAINERS.
3. CONTAINER CLASS SIZE SHALL CONFORM TO ANSI Z60.1 FOR CONTAINER PLANTS FOR EACH SIZE AND TYPE OF PLANT.

2.2 PLANTING SOIL

A. PLANTING SOIL AS USED IN THIS SPECIFICATION MEANS THE SOIL AT THE PLANTING SITE, OR IMPORTED AS MODIFIED AND DEFINED IN SPECIFICATION SECTION PLANTING SOIL. IF THERE IS NO PLANTING SOIL SPECIFICATION, THE TERM PLANTING SOIL SHALL MEAN THE SOIL AT THE PLANTING SITE WITHIN THE PLANTING HOLE.

2.3 MULCH

A. MULCH SHALL BE FROM TREE AND WOODY BRUSH SOURCES. THE SIZE RANGE SHALL BE A MINIMUM (LESS THAN 25% OR LESS OF VOLUME) FINE PARTICLES 3/8 INCH OR LESS IN SIZE, AND A MAXIMUM SIZE OF INDIVIDUAL PIECES (LARGEST 20% OR LESS OF VOLUME) SHALL BE APPROXIMATELY 1 TO 1-1/2 INCH IN DIAMETER AND MAXIMUM LENGTH APPROXIMATELY 4 TO 8". PIECES LARGER THAN 8 INCH LONG THAT ARE VISIBLE ON THE SURFACE OF THE MULCH AFTER INSTALLATION SHALL BE REMOVED.

1. IT IS UNDERSTOOD THAT MULCH QUALITY WILL VARY SIGNIFICANTLY FROM SUPPLIER TO SUPPLIER AND REGION TO REGION. THE ABOVE REQUIREMENTS MAY BE MODIFIED TO CONFORM TO THE SOURCE MATERIAL FROM LOCALLY RELIABLE SUPPLIERS AS APPROVED BY THE OWNER'S REPRESENTATIVE.

2.4 TREE STAKING AND GUYING MATERIAL

A. TREE GUYING TO BE FLAT WOVEN POLYPROPYLENE MATERIAL, 3/4 INCH WIDE, AND 900 LB. BREAK STRENGTH. COLOR TO BE GREEN. PRODUCT TO BE ARBORTIE MANUFACTURED BY DEEP ROOT PARTNERS, L.P. OR APPROVED EQUAL.

B. STAKES SHALL BE LODGE POLE STAKES FREE OF KNOTS AND OF DIAMETERS AND LENGTHS APPROPRIATE TO THE SIZE OF PLANT AS REQUIRED TO ADEQUATELY SUPPORT THE PLANT.

C. BELOW GROUND ANCHORAGE SYSTEMS TO BE CONSTRUCTED OF 2 X 2 DIMENSIONAL UNTREATED WOOD SECURING (USING 3 INCH LONG SCREWS) HORIZONTAL PORTIONS TO 4 FEET LONG VERTICAL STAKES DRIVEN STRAIGHT INTO THE GROUND OUTSIDE THE ROOT BALL.

PLANTING -EXECUTION

3.1 SITE EXAMINATION

A. EXAMINE THE SURFACE GRADES AND SOIL CONDITIONS TO CONFIRM THAT THE REQUIREMENTS OF THE SPECIFICATION SECTION - PLANTING SOIL - AND THE SOIL AND DRAINAGE MODIFICATIONS INDICATED ON THE PLANTING SOIL PLAN AND DETAILS (IF APPLICABLE) HAVE BEEN COMPLETED. NOTIFY THE OWNER'S REPRESENTATIVE IN WRITING OF ANY UNSATISFACTORY CONDITIONS.

3.2 DELIVERY, STORAGE AND HANDLING

A. PROTECT MATERIALS FROM DETERIORATION DURING DELIVERY AND STORAGE. ADEQUATELY PROTECT PLANTS FROM DRYING OUT, EXPOSURE OF ROOTS TO SUN, WIND OR EXTREMES OF HEAT AND COLD TEMPERATURES. IF PLANTING IS DELAYED MORE THAN 24 HOURS AFTER DELIVERY, SET PLANTS IN A LOCATION PROTECTED FROM SUN AND WIND. PROVIDE ADEQUATE WATER TO THE ROOT BALL PACKAGE DURING THE SHIPPING AND STORAGE PERIOD.

1. ALL PLANT MATERIALS MUST BE AVAILABLE FOR OBSERVATION PRIOR TO PLANTING.
2. USING A SOIL MOISTURE METER, PERIODICALLY CHECK THE SOIL MOISTURE IN THE ROOT BALLS OF ALL PLANTS TO ASSURE THAT THE PLANTS ARE BEING ADEQUATELY WATERED. VOLUMETRIC SOIL MOISTURE SHALL BE MAINTAINED ABOVE WILTING POINT AND BELOW FIELD CAPACITY FOR THE ROOT BALL SUBSTRATE OR SOIL.

B. DO NOT DELIVER MORE PLANTS TO THE SITE THAN THERE IS SPACE WITH ADEQUATE STORAGE CONDITIONS. PROVIDE A SUITABLE REMOTE STAGING AREA FOR PLANTS AND OTHER SUPPLIES.

C. PROVIDE PROTECTIVE COVERING OVER ALL PLANTS DURING TRANSPORTING.

3.3 PLANTING SEASON

A. PLANTING SHALL ONLY BE PERFORMED WHEN WEATHER AND SOIL CONDITIONS ARE SUITABLE FOR PLANTING THE MATERIALS SPECIFIED IN ACCORDANCE WITH LOCALLY ACCEPTED PRACTICE.IN THE EVENT THAT THE CONTRACTOR REQUEST PLANTING OUTSIDE THE DATES OF THE PLANTING SEASON, APPROVAL OF THE REQUEST DOES NOT CHANGE THE REQUIREMENTS OF THE WARRANTY.

3.4 ADVERSE WEATHER CONDITIONS

A. NO PLANTING SHALL TAKE PLACE DURING EXTREMELY HOT, DRY, WINDY OR FREEZING WEATHER.

3.5 COORDINATION WITH PROJECT WORK

A. THE CONTRACTOR SHALL COORDINATE WITH ALL OTHER WORK THAT MAY IMPACT THE COMPLETION OF THE WORK. .

B. COORDINATE THE RELOCATION OF ANY IRRIGATION LINES, HEADS OR THE CONDUITS OF OTHER UTILITY LINES THAT ARE IN CONFLICT WITH TREE LOCATIONS. ROOT BALLS SHALL NOT BE ALTERED TO FIT AROUND LINES. NOTIFY THE OWNER'S REPRESENTATIVE OF ANY CONFLICTS ENCOUNTERED.

3.6 LAYOUT AND PLANTING SEQUENCE

A. RELATIVE POSITIONS OF ALL PLANTS AND TREES ARE SUBJECT TO APPROVAL OF THE OWNER'S REPRESENTATIVE.

B. WHEN APPLICABLE, PLANT TREES BEFORE OTHER PLANTS ARE INSTALLED.

C. IT IS UNDERSTOOD THAT PLANTS ARE NOT PRECISE OBJECTS AND THAT MINOR ADJUSTMENTS IN THE LAYOUT WILL BE REQUIRED AS THE PLANTING PLAN IS CONSTRUCTED. THESE ADJUSTMENTS MAY NOT BE APPARENT UNTIL SOME OR ALL OF THE PLANTS ARE INSTALLED. MAKE ADJUSTMENTS AS REQUIRED BY THE OWNER'S REPRESENTATIVE INCLUDING RELOCATING PREVIOUSLY INSTALLED PLANTS.

3.7 SOIL PROTECTION DURING PLANT DELIVERY AND INSTALLATION

A. PROTECT SOIL FROM COMPACTION DURING THE DELIVERY OF PLANTS TO THE PLANTING LOCATIONS, DIGGING OF PLANTING HOLES AND INSTALLING PLANTS.

1. WHERE POSSIBLE DELIVER AND PLANT TREES THAT REQUIRE THE USE OF HEAVY MECHANIZED EQUIPMENT PRIOR TO FINAL SOIL PREPARATION AND TILLING. WHERE POSSIBLE, RESTRICT THE DRIVING LANES TO ONE AREA INSTEAD OF DRIVING OVER AND COMPACTING A LARGE AREA OF SOIL.

B. TILL TO A DEPTH OF 6 INCHES, ALL SOIL THAT HAS BEEN DRIVEN OVER DURING THE INSTALLATION OF PLANTS.

3.8 INSTALLATION OF PLANTS: GENERAL

A. OBSERVE EACH PLANT AFTER DELIVERY AND PRIOR TO INSTALLATION FOR DAMAGE OF OTHER CHARACTERISTICS THAT MAY CAUSE REJECTION OF THE PLANT. NOTIFY THE OWNER'S REPRESENTATIVE OF ANY CONDITION OBSERVED.

B. NO MORE PLANTS SHALL BE DISTRIBUTED ABOUT THE PLANTING BED AREA THAN CAN BE PLANTED AND WATERED ON THE SAME DAY.

C. THE OUTER SURFACES OF ALL PLANTS IN CONTAINERS AND BOXES, INCLUDING THE TOP, SIDES AND BOTTOM OF THE ROOT BALL SHALL BE SHAVED TO REMOVE ALL CIRCLING, DESCENDING, AND MATTED ROOTS. SHAVING SHALL REMOVE A MINIMUM OF ONE INCH OF ROOT MAT OR UP TO 2 INCHES AS REQUIRED TO REMOVE ALL ROOT SEGMENTS THAT ARE NOT GROWING REASONABLY RADIAL TO THE TRUNK.

D. CONTAINER (INCLUDES BOXED AND ABOVE-GROUND FABRIC CONTAINERS) PLANTS

1. THIS SPECIFICATION ASSUMES THAT MOST CONTAINER PLANTS HAVE SIGNIFICANT STEM GIRDLING AND CIRCLING ROOTS, AND THAT THE ROOT COLLAR IS TOO LOW IN THE ROOT BALL.
2. REMOVE THE CONTAINER.
3. PERFORM ROOT BALL SHAVING AS DEFINED IN INSTALLATION OF PLANTS: GENERAL ABOVE.
4. REMOVE ALL ROOTS AND SUBSTRATE ABOVE THE ROOT COLLAR AND THE MAIN STRUCTURAL ROOTS ACCORDING TO ROOT CORRECTION DETAILS SO ROOT SYSTEM CONFORMS TO ROOT OBSERVATIONS DETAIL.

E. REMOVE ALL SUBSTRATE AT THE BOTTOM OF THE ROOT BALL THAT DOES NOT CONTAIN ROOTS.

3.9 STAKING AND GUYING

A. DO NOT STAKE OR GUY TREES UNLESS SPECIFICALLY REQUIRED BY THE CONTRACT DOCUMENTS, OR IN THE EVENT THAT THE CONTRACTOR FEELS THAT STAKING IS THE ONLY ALTERNATIVE WAY TO KEEP PARTICULAR TREES PLUMB. .

3.10 INSTALLATION OF FERTILIZER AND OTHER CHEMICAL ADDITIVES

A. DO NOT APPLY ANY SOLUBLE FERTILIZER TO PLANTINGS DURING THE FIRST YEAR AFTER TRANSPLANTING UNLESS SOIL TEST DETERMINES THAT FERTILIZER OR OTHER CHEMICAL ADDITIVES IS REQUIRED. APPLY CHEMICAL ADDITIVES ONLY UPON THE APPROVAL OF THE OWNER'S REPRESENTATIVE.

B. CONTROLLED RELEASE FERTILIZERS SHALL BE APPLIED ACCORDING TO THE MANUFACTURER'S INSTRUCTIONS AND STANDARD HORTICULTURAL PRACTICES.

3.11 PRUNING OF TREES AND SHRUBS

A. PRUNE PLANTS AS DIRECTED BY THE OWNER'S REPRESENTATIVE. PRUNING TREES SHALL BE LIMITED TO ADDRESSING STRUCTURAL DEFECTS AS SHOWN IN DETAILS; FOLLOW RECOMMENDATIONS IN "STRUCTURAL PRUNING: A GUIDE FOR THE GREEN INDUSTRY" PUBLISHED BY URBAN TREE FOUNDATION

B. ALL PRUNING SHALL BE PERFORMED BY A PERSON EXPERIENCED IN STRUCTURAL TREE PRUNING.

C. EXCEPT FOR PLANTS SPECIFIED AS MULTI-STEMMED OR AS OTHERWISE INSTRUCTED BY THE OWNER'S REPRESENTATIVE, PRESERVE OR CREATE A CENTRAL LEADER.

D. PRUNING OF LARGE TREES SHALL BE DONE USING POLE PRUNERS OR IF NEEDED, FROM A LADDER OR HYDRAULIC LIFT TO GAIN ACCESS TO THE TOP OF THE TREE. DO NOT CLIMB IN NEWLY PLANTED TREES. SMALL TREES CAN BE STRUCTURALLY PRUNED BY LAYING THEM OVER BEFORE PLANTING. PRUNING MAY ALSO BE PERFORMED AT THE NURSERY PRIOR TO SHIPPING.

E. REMOVE AND REPLACE EXCESSIVELY PRUNED OR MALFORMED STOCK RESULTING FROM IMPROPER PRUNING THAT OCCURRED IN THE NURSERY OR AFTER.

F. NO TREE PAINT OR SEALANTS SHALL BE USED.

3.12 WATERING

A. THE CONTRACTOR SHALL BE FULLY RESPONSIBLE TO ENSURE THAT ADEQUATE WATER IS PROVIDED TO ALL PLANTS FROM THE POINT OF INSTALLATION UNTIL THE DATE OF SUBSTANTIAL COMPLETION ACCEPTANCE. THE CONTRACTOR SHALL ADJUST THE AUTOMATIC IRRIGATION SYSTEM, IF AVAILABLE, AND APPLY ADDITIONAL OR ADJUST FOR LESS WATER USING HOSES AS REQUIRED.

B. HAND WATER ROOT BALLS OF ALL PLANTS TO ASSURE THAT THE ROOT BALLS HAVE MOISTURE ABOVE WILT POINT AND BELOW FIELD CAPACITY. TEST THE MOISTURE CONTENT IN EACH ROOT BALL AND THE SOIL OUTSIDE THE ROOT BALL TO DETERMINE THE WATER CONTENT.

3.13 CLEAN-UP

A. DURING INSTALLATION, KEEP THE SITE FREE OF TRASH, PAVEMENTS REASONABLY CLEAN AND WORK AREA IN AN ORDERLY CONDITION AT THE END OF EACH DAY. REMOVE TRASH AND DEBRIS IN CONTAINERS FROM THE SITE NO LESS THAN ONCE A WEEK.

1. IMMEDIATELY CLEAN UP ANY SPILLED OR TRACKED SOIL, FUEL, OIL, TRASH OR DEBRIS DEPOSITED BY THE CONTRACTOR FROM ALL SURFACES WITHIN THE PROJECT OR ON PUBLIC RIGHT OF WAYS AND NEIGHBORING PROPERTY.

B. ONCE INSTALLATION IS COMPLETE, WASH ALL SOIL FROM PAVEMENTS AND OTHER STRUCTURES. ENSURE THAT MULCH IS CONFINED TO PLANTING BEDS AND THAT ALL TAGS AND FLAGGING TAPE ARE REMOVED FROM THE SITE. THE OWNER'S REPRESENTATIVE'S SEALS ARE TO REMAIN ON THE TREES AND REMOVED AT THE END OF THE WARRANTY PERIOD.

C. MAKE ALL REPAIRS TO GRADES, RUTS, AND DAMAGE BY THE PLANT INSTALLER TO THE WORK OR OTHER WORK AT THE SITE.

D. REMOVE AND DISPOSE OF ALL EXCESS PLANTING SOIL, SUBSOIL, MULCH, PLANTS, PACKAGING, AND OTHER MATERIAL BROUGHT TO THE SITE BY THE CONTRACTOR.

3.14 PROTECTION DURING CONSTRUCTION

A. THE CONTRACTOR SHALL PROTECT PLANTING AND RELATED WORK AND OTHER SITE WORK FROM DAMAGE DUE TO PLANTING OPERATIONS, OPERATIONS BY OTHER CONTRACTORS OR TRESPASSERS. MAINTAIN PROTECTION DURING INSTALLATION UNTIL SUBSTANTIAL COMPLETION ACCEPTANCE. TREAT, REPAIR OR REPLACE DAMAGED WORK IMMEDIATELY.

B. DAMAGE DONE BY THE CONTRACTOR, OR ANY OF THEIR SUB-CONTRACTORS TO EXISTING OR INSTALLED PLANTS, OR ANY OTHER PARTS OF THE WORK OR EXISTING FEATURES TO REMAIN, INCLUDING ROOTS, TRUNK OR BRANCHES OF LARGE EXISTING TREES, SOIL, PAVING, UTILITIES, LIGHTING, IRRIGATION, OTHER FINISHED WORK AND SURFACES INCLUDING THOSE ON ADJACENT PROPERTY, SHALL BE CLEANED, REPAIRED OR REPLACED BY THE CONTRACTOR AT NO EXPENSE TO

3.15 PLANT MAINTENANCE PRIOR TO SUBSTANTIAL COMPLETION ACCEPTANCE

A. DURING THE PROJECT WORK PERIOD AND PRIOR TO SUBSTANTIAL COMPLETION ACCEPTANCE, THE CONTRACTOR SHALL MAINTAIN ALL PLANTS.

B. MAINTENANCE DURING THE PERIOD PRIOR TO SUBSTANTIAL COMPLETION ACCEPTANCE SHALL CONSIST OF PRUNING, WATERING, CULTIVATING, WEEDING, MULCHING, REMOVAL OF DEAD MATERIAL, REPAIRING AND REPLACING OF TREE STAKES, TIGHTENING AND REPAIRING OF GUYS, REPAIRING AND REPLACING OF DAMAGED TREE WRAP MATERIAL, RESETTING PLANTS TO PROPER GRADES AND UPRIGHT POSITION, AND FURNISHING AND APPLYING SUCH SPRAYS AS ARE NECESSARY TO KEEP PLANTINGS REASONABLY FREE OF DAMAGING INSECTS AND DISEASE, AND IN HEALTHY CONDITION. THE THRESHOLD FOR APPLYING INSECTICIDES AND HERBICIDE SHALL FOLLOW ESTABLISHED INTEGRATED PEST MANAGEMENT (IPM) PROCEDURES. MULCH AREAS SHALL BE KEPT REASONABLY FREE OF WEEDS, GRASS.

3.16 SUBSTANTIAL COMPLETION ACCEPTANCE

A. UPON WRITTEN NOTICE FROM THE CONTRACTOR, THE OWNERS REPRESENTATIVE SHALL REVIEW THE WORK AND MAKE A DETERMINATION IF THE WORK IS SUBSTANTIALLY COMPLETE.

1. NOTIFICATION SHALL BE AT LEAST 7 DAYS PRIOR TO THE DATE THE CONTRACTOR IS REQUESTING THE REVIEW.

B. THE DATE OF SUBSTANTIAL COMPLETION OF THE PLANTING SHALL BE THE DATE WHEN THE OWNER'S REPRESENTATIVE ACCEPTS THAT ALL WORK IN PLANTING, PLANTING SOIL, AND IRRIGATION INSTALLATION SECTIONS IS COMPLETE. THE PLANT WARRANTY PERIOD BEGINS AT DATE OF WRITTEN NOTIFICATION OF SUBSTANTIAL COMPLETION FROM THE OWNER'S REPRESENTATIVE. THE DATE OF SUBSTANTIAL COMPLETION MAY BE DIFFERENT THAN THE DATE OF SUBSTANTIAL COMPLETION FOR THE OTHER SECTIONS OF THE PROJECT.

3.17 MAINTENANCE DURING THE WARRANTY PERIOD BY OTHERS

A. AFTER SUBSTANTIAL COMPLETION ACCEPTANCE, THE CONTRACTOR SHALL MAKE SUFFICIENT SITE VISITS TO OBSERVE THE OWNER'S MAINTENANCE AND BECOME AWARE OF PROBLEMS WITH THE MAINTENANCE IN TIME TO REQUEST CHANGES, UNTIL THE DATE OF END OF WARRANTY FINAL ACCEPTANCE.

1. NOTIFY THE OWNER'S REPRESENTATIVE IN WRITING IF MAINTENANCE, INCLUDING WATERING, IS NOT SUFFICIENT TO MAINTAIN PLANTS IN A HEALTHY CONDITION. SUCH NOTIFICATION MUST BE MADE IN A TIMELY PERIOD SO THAT THE OWNER'S REPRESENTATIVE MAY TAKE CORRECTIVE ACTION.
   a) NOTIFICATION MUST DEFINE THE MAINTENANCE NEEDS AND DESCRIBE ANY CORRECTIVE ACTION REQUIRED.
2. IN THE EVENT THAT THE CONTRACTOR FAILS TO VISIT THE SITE AND OR NOTIFY, IN WRITING, THE OWNER'S REPRESENTATIVE OF MAINTENANCE NEEDS, LACK OF MAINTENANCE SHALL NOT BE USED AS GROUNDS FOR VOIDING OR MODIFYING THE PROVISIONS OF THE WARRANTY.

3.18 MAINTENANCE DURING THE WARRANTY PERIOD BY THE PLANT INSTALLER

A. DURING THE WARRANTY PERIOD, PROVIDE ALL MAINTENANCE FOR ALL PLANTINGS TO KEEP THE PLANTS IN A HEALTHY STATE AND THE PLANTING AREAS CLEAN AND NEAT.

B. GENERAL REQUIREMENTS:

1. ALL WORK SHALL BE UNDERTAKEN BY TRAINED PLANTING CREWS UNDER THE SUPERVISION OF A FOREMAN WITH A MINIMUM OF 5 YEARS EXPERIENCE SUPERVISING COMMERCIAL PLANT MAINTENANCE CREWS.
2. ALL CHEMICAL AND FERTILIZER APPLICATIONS SHALL BE MADE BY LICENSED APPLICATORS FOR THE TYPE OF CHEMICALS TO BE USED. ALL WORK AND CHEMICAL USE SHALL COMPLY WITH ALL APPLICABLE LOCAL, PROVINCIAL AND FEDERAL REQUIREMENTS.
3. ASSURE THAT HOSES AND WATERING EQUIPMENT AND OTHER MAINTENANCE EQUIPMENT DOES NOT BLOCK PATHS OR BE PLACED IN A MANNER THAT MAY CREATE TRIPPING HAZARDS. USE STANDARD SAFETY WARNING BARRIERS AND OTHER PROCEDURES TO MAINTAIN THE SITE IN A SAFE MANNER FOR VISITORS AT ALL TIMES.
4. ALL WORKERS SHALL WEAR REQUIRED SAFETY EQUIPMENT AND APPAREL APPROPRIATE FOR THE TASKS BEING UNDERTAKEN.
5. THE CONTRACTOR SHALL NOT STORE MAINTENANCE EQUIPMENT AT THE SITE AT TIMES WHEN THEY ARE NOT IN USE UNLESS AUTHORIZED IN WRITING BY THE OWNER'S REPRESENTATIVE.
6. MAINTENANCE VEHICLES SHALL NOT PARK ON THE SITE INCLUDING WALKS AND LAWN AREAS AT ANY TIME WITHOUT THE OWNER'S REPRESENTATIVE'S WRITTEN PERMISSION.
7. MAINTAIN A DETAILED LOG OF ALL MAINTENANCE ACTIVITIES INCLUDING TYPES OF TASKS, DATE OF TASK, TYPES AND QUANTITIES OF MATERIALS AND PRODUCTS USED, WATERING TIMES AND AMOUNTS, AND NUMBER OF EACH CREW. PERIODICALLY REVIEW THE LOGS WITH THE OWNER'S REPRESENTATIVE, AND SUBMIT A COPY OF THE LOGS AT THE END OF EACH YEAR OF THE MAINTENANCE AGREEMENT.
8. MEET WITH THE OWNER'S REPRESENTATIVE A MINIMUM OF THREE TIMES A YEAR TO REVIEW THE PROGRESS AND DISCUSS ANY CHANGES THAT ARE NEEDED IN THE MAINTENANCE PROGRAM. AT THE END OF THE WARRANTY PERIOD ATTEND A HAND OVER MEETING TO FORMALLY TRANSFER THE RESPONSIBILITIES OF MAINTENANCE TO THE OWNER'S REPRESENTATIVE. PROVIDE ALL INFORMATION ON PAST MAINTENANCE ACTIVITIES AND PROVIDE A LIST OF CRITICAL TASKS THAT WILL BE NEEDED OVER THE NEXT 12 MONTHS. PROVIDE ALL MAINTENANCE LOGS AND SOIL TEST DATA. MAKE THE CONTRACTOR'S SUPERVISOR AVAILABLE FOR A MINIMUM OF ONE YEAR AFTER THE END OF THE WARRANTY PERIOD TO ANSWER QUESTIONS ABOUT PAST MAINTENANCE.

C. PROVIDE THE FOLLOWING MAINTENANCE TASKS:

1. WATERING; PROVIDE ALL WATER REQUIRED TO KEEP SOIL WITHIN AND AROUND THE ROOT BALLS AT OPTIMUM MOISTURE CONTENT FOR PLANT GROWTH.
   a. MAINTAIN ALL WATERING SYSTEMS AND EQUIPMENT AND KEEP THEM OPERATIONAL.
   b. MONITOR SOIL MOISTURE TO PROVIDE SUFFICIENT WATER. CHECK SOIL MOISTURE AND ROOT BALL MOISTURE WITH A SOIL MOISTURE METER ON A REGULAR BASIS AND RECORD MOISTURE READINGS. DO NOT OVER WATER.
2. SOIL NUTRIENT LEVELS: TAKE A MINIMUM OF 4 SOIL SAMPLES FROM AROUND THE SITE IN THE SPRING AND FALL AND HAVE THEM TESTED BY AN ACCREDITED AGRICULTURAL SOIL TESTING LAB FOR CHEMICAL COMPOSITION OF PLANT REQUIRED NUTRIENTS, PH, SALT AND % ORGANIC MATTER. TEST RESULTS SHALL INCLUDE LABORATORY RECOMMENDATIONS FOR NUTRIENT APPLICATIONS. APPLY FERTILIZERS AT RATES RECOMMENDED BY THE SOIL TEST.
3. MAKE ANY OTHER SOIL TEST AND/OR PLANT TISSUE TEST THAT MAY BE INDICATED BY PLANT CONDITIONS THAT MAY NOT BE RELATED TO SOIL NUTRIENT LEVELS SUCH AS SOIL CONTAMINATED BY OTHER CHEMICALS OR LACK OF CHEMICAL UPTAKE BY THE PLANT.
4. PLANT PRUNING: REMOVE CROSS OVER BRANCHING, SHORTEN OR REMOVE DEVELOPING CO DOMINANT LEADERS, DEAD WOOD AND WINTER-DAMAGED BRANCHES. UNLESS DIRECTED BY THE OWNER'S REPRESENTATIVE, DO NOT SHEAR PLANTS OR MAKE HEADING CUTS.
5. RESTORE PLANTS: RESET ANY PLANTS THAT HAVE SETTLED OR ARE LEANING AS SOON AS THE CONDITION IS NOTICED.
6. GUYING AND STAKING: MAINTAIN PLANT GUYS IN A TAUGHT POSITION. REMOVE TREE GUYS AND STAKING AFTER THE FIRST FULL GROWING SEASON UNLESS DIRECTED BY OWNER'S REPRESENTATIVE.
7. WEED CONTROL: KEEP ALL BEDS FREE OF WEEDS. HAND-REMOVE ALL WEEDS AND ANY PLANTS THAT DO NOT APPEAR ON THE PLANTING PLAN. CHEMICAL WEED CONTROL IS PERMITTED ONLY WITH THE APPROVAL OF THE OWNER'S REPRESENTATIVE. SCHEDULE WEEDING AS NEEDED BUT NOT LESS THAN 12 TIMES PER YEAR.
8. TRASH REMOVAL: REMOVE ALL TRASH AND DEBRIS FROM ALL PLANTING BEDS AND MAINTAIN THE BEDS IN A NEAT AND TIDY APPEARANCE. THE NUMBER OF TRASH AND DEBRIS REMOVAL VISITS SHALL BE NO LESS THAN 12 TIMES PER YEAR AND MAY COINCIDE WITH OTHER MAINTENANCE VISITS.
9. PLANT PEST CONTROL: MAINTAIN DISEASE, INSECTS AND OTHER PESTS AT MANAGEABLE LEVELS. MANAGEABLE LEVELS SHALL BE DEFINED AS DAMAGE TO PLANTS THAT MAY BE NOTICEABLE TO A PROFESSIONAL BUT NOT TO THE AVERAGE PERSON. USE LEAST INVASIVE METHODS TO CONTROL PLANT DISEASE AND INSECT OUTBREAKS.
10. THE OWNER'S REPRESENTATIVE MUST APPROVE IN ADVANCE THE USE OF ALL CHEMICAL PESTICIDE APPLICATIONS.
11. PLANT REPLACEMENT: REPLACE ALL PLANTS THAT ARE DEFECTIVE AS DEFINED IN THE WARRANTY PROVISIONS, AS SOON AS THE PLANT DECLINE IS OBVIOUS AND IN SUITABLE WEATHER AND SEASON FOR PLANTING AS OUTLINED IN ABOVE SECTIONS. PLANTS THAT BECOME DEFECTIVE DURING THE MAINTENANCE PERIOD SHALL BE COVERED AND REPLACED UNDER THE WARRANTY PROVISIONS.
12. MULCH: REFRESH MULCH ONCE A YEAR TO MAINTAIN COMPLETE COVERAGE BUT DO NOT OVER MULCH. AT NO TIME SHALL THE OVERALL MULCH THICKNESS BE GREATER THAN 4 INCHES. DO NOT APPLY MULCH WITHIN 6 INCHES OF THE TRUNKS OR STEMS OF ANY PLANTS. REPLACEMENT MULCH SHALL MEET THE REQUIREMENTS OF THE ORIGINAL APPROVED MATERIAL. MULCH SHALL BE NO MORE THAN ONE INCH ON TOP OF THE ROOT BALL SURFACE.
13. BED EDGING: CHECK AND MAINTAIN EDGES BETWEEN MULCH AND LAWN AREAS IN SMOOTH NEAT LINES AS ORIGINALLY SHOWN ON THE DRAWINGS.
14. LEAF, FRUIT AND OTHER PLANT DEBRIS REMOVAL: REMOVE FALL LEAF, SPENT FLOWERS, FRUIT AND PLANT PART ACCUMULATIONS FROM BEDS AND PAVED SURFACES. MAINTAIN ALL SURFACE WATER DRAINS FREE OF DEBRIS. DEBRIS REMOVAL SHALL BE UNDERTAKEN AT EACH VISIT TO WEED OR PICK UP TRASH IN BEDS.
15. DAMAGE FROM SITE USE: REPAIR OF DAMAGE BY SITE VISITORS AND EVENTS, BEYOND NORMAL WEAR, ARE NOT PART OF THIS MAINTENANCE. THE OWNER'S REPRESENTATIVE MAY REQUEST THAT THE CONTRACTOR REPAIR DAMAGE BEDS OR PLANTINGS FOR AN ADDITIONAL COST. ALL ADDITIONAL WORK SHALL BE APPROVED IN ADVANCE BY THE OWNER'S REPRESENTATIVE.

3.19 END OF WARRANTY FINAL ACCEPTANCE / MAINTENANCE OBSERVATION

A. AT THE END OF THE WARRANTY AND MAINTENANCE PERIOD THE OWNER'S REPRESENTATIVE SHALL OBSERVE THE WORK AND ESTABLISH THAT ALL PROVISIONS OF THE CONTRACT ARE COMPLETE AND THE WORK IS SATISFACTORY.

1. IF THE WORK IS SATISFACTORY, THE MAINTENANCE PERIOD WILL END ON THE DATE OF THE FINAL OBSERVATION.
2. IF THE WORK IS DEEMED UNSATISFACTORY, THE MAINTENANCE PERIOD WILL CONTINUE AT NO ADDITIONAL EXPENSE TO THE OWNER UNTIL THE WORK HAS BEEN COMPLETED, OBSERVED, AND APPROVED BY THE OWNER'S REPRESENTATIVE.

B. FAILURE TO PASS OBSERVATION: IF THE WORK FAILS TO PASS FINAL OBSERVATION, ANY SUBSEQUENT OBSERVATIONS MUST BE RESCHEDULED AS PER ABOVE. THE COST TO THE OWNER FOR ADDITIONAL OBSERVATIONS WILL BE CHARGED TO THE CONTRACTOR AT THE PREVAILING HOURLY RATE OF THE OWNERS REPRESENTATIVE.

KFM
ENGINEERING & DESIGN
621 N. MAIN STREET, SUITE 415
GRAPEVINE, TEXAS 76051
PHONE: (817) 416-4536
WWW.KFM-LLC.COM
TBPE #: F-20821

ISSUE:	DESCRIPTION:	DATE:	DELTA:	DESCRIPTION:	DATE:
1	ISSUE FOR CONSTRUCTION	7/13/20			

CLIENT
CA LUCAS LLC

PROJECT
LOT 4 - WAL-MART LUCAS

SHEET TITLE
LANDSCAPE NOTES & SPECIFICATIONS

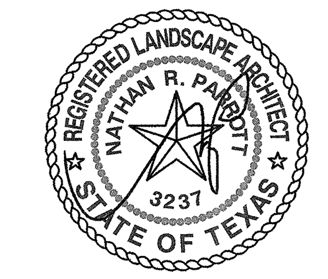

07/13/2020

PROJECT NUMBER:
010011001

DRAWN BY: ALM
DESIGNED BY: DMP
CHECKED BY: JAM

DATE:
2020/07/13

SHEET:
L1.01

K:\Projects\010011\001\cad\sheet\010011001_lap01-ZLISZEWSKI-7/1/2020 10:41 AM

PLANTING SOIL - PRODUCTS

4.1 MODIFIED EXISTING SOIL (SOIL SUITABLE FOR PLANTING WITH INDICATED MODIFICATION)

A. GENERAL DEFINITION: SURFACE SOIL IN PLANTING BED AREAS. SOIL HAS BEEN ALTERED AND OR GRADED BEFORE OR DURING THE CONSTRUCTION PROCESS BUT IS STILL CONSIDERED ACCEPTABLE FOR PLANTING AND LONG TERM HEALTH OF THE PLANTS SPECIFIED WITH THE PROPOSED MODIFICATIONS. MODIFICATIONS RESPOND TO THE SOIL PROBLEMS EXPECTED OR ENCOUNTERED. GENERAL REQUIREMENTS FOR ALL SOIL MODIFICATIONS:

1. UNLESS OTHERWISE INSTRUCTED, REMOVE ALL EXISTING PLANTS, ROOT THATCH, AND NON-SOIL DEBRIS FROM THE SURFACE OF THE SOIL USING EQUIPMENT THAT DOES NOT ADD TO THE COMPACTION IN THE SOIL.
2. ALL SOIL GRADING, TILLING AND LOOSENING MUST BE COMPLETED AT TIMES WHEN THE SOIL MOISTURE IS BELOW FIELD CAPACITY. ALLOW SOIL TO DRAIN FOR AT LEAST TWO DAYS AFTER ANY RAIN EVENT MORE THAN 1 INCH IN 24 HOURS, OR LONG ENOUGH SO THAT THE SOIL DOES NOT MAKE THE HAND MUDDY WHEN SQUEEZED.
3. PROVIDE PRE-EMERGENT WEED CONTROL AFTER THE SOIL WORK IS COMPLETE AND PLANTS PLANTED BUT PRIOR TO ADDING MULCH TO THE SURFACE, IF INDICATED BY WEED TYPE AND DEGREE OF THREAT.

B. MODIFIED EXISTING SOIL - SOIL REMOVED, STOCKPILED, AND SPREAD

1. DESCRIPTION OF CONDITION TO BE MODIFIED: EXISTING SOIL THAT IS SUITABLE FOR REUSE AS PLANTING SOIL BUT IS IN THE WRONG PLACE OF ELEVATION, OR CANNOT BE ADEQUATELY PROTECTED DURING CONSTRUCTION. SOIL IS TO BE HARVESTED, STOCKPILED AND RE-SPREAD WITH OR WITHOUT FURTHER MODIFICATIONS AS INDICATED.
2. MODIFICATIONS:

a) EXCAVATE EXISTING SOIL FROM THE AREAS AND TO DEPTHS DESIGNATED ON THE DRAWINGS. STOCKPILE IN ZONES NOTED ON THE DRAWINGS OR IN AREAS PROPOSED BY THE CONTRACTOR.

b) EXCAVATE SOIL USING EQUIPMENT AND METHODS TO PRESERVE THE CLUMPS AND PEDS IN THE SOIL. GENERALLY THIS MEANS USING THE LARGEST PIECE OF EQUIPMENT THAT IS PRACTICAL FOR THE PROJECT SIZE AND SCOPE.

c) PROTECT STOCK PILES FROM EROSION BY COMPACTING OR TRACKING THE SOIL SURFACE, COVERING WITH BREATHABLE FABRIC OR PLANTING WITH ANNUAL GRASSES AS APPROPRIATE FOR THE SEASON, LOCATION, AND LENGTH OF EXPECTED TIME OF STORAGE.

d) RE-SPREAD SOIL AS REQUIRED IN PART 3 OF THIS SPECIFICATION.

C. MODIFIED EXISTING SOIL - COMPACTED SURFACE SOIL (TILLING OPTION)

1. DESCRIPTION OF CONDITION TO BE MODIFIED: SURFACE SOIL COMPACTION TO A MAXIMUM OF 6 INCHES DEEP FROM TRAFFIC OR LIGHT GRADING. ORIGINAL A HORIZON MAY BE PREVIOUSLY REMOVED OR GRADED BUT LOWER PROFILE INTACT WITH ACCEPTABLE COMPACTION LEVELS AND LIMITED GRADING. THE SOIL ORGANIC MATTER, PH AND CHEMISTRY IN THE A HORIZON MAY NOT BE SUITABLE FOR THE PROPOSED PLANTS AND MAY NEED TO BE MODIFIED AS REQUIRED.
2. MODIFICATIONS

a) TILL TOP 6 INCHES OR DEEPER OF THE SOIL SURFACE, WITH A ROTO TILLER, SPADE TILLER, RIPPER OR AGRICULTURAL PLOW. SPREAD 2 - 3 INCHES OF COMPOST ON THE SURFACE OF THE TILLED SOIL AND MAKE ANY CHEMICAL ADJUSTMENT AS RECOMMENDED BY THE SOIL TEST.

b) TILL OR DISK THE COMPOST INTO THE LOOSENED SOIL. SMOOTH OUT GRADES WITH A DRAG RAKE OR DRAG SLIP.

PLANTING SOIL - EXECUTION

5.1 SITE EXAMINATION

A. PRIOR TO INSTALLATION OF PLANTING SOIL, EXAMINE SITE TO CONFIRM THAT EXISTING CONDITIONS ARE SATISFACTORY FOR THE WORK OF THIS SECTION TO PROCEED.

1. CONFIRM THAT THE SUBGRADE IS AT THE PROPER ELEVATION AND COMPACTED AS REQUIRED. SUBGRADE ELEVATIONS SHALL SLOPE TOWARD THE UNDER DRAIN LINES AS SHOWN ON THE DRAWINGS.
2. CONFIRM THAT SURFACE ALL AREAS TO BE FILLED WITH PLANTING SOIL ARE FREE OF CONSTRUCTION DEBRIS, REFUSE, COMPRESSIBLE OR BIODEGRADABLE MATERIALS, STONES GREATER THAN 2 INCHES DIAMETER, SOIL CRUSTING FILMS OF SILT OR CLAY THAT REDUCES OR STOPS DRAINAGE FROM THE PLANTING SOIL INTO THE SUBSOIL; AND/OR STANDING WATER. REMOVE UNSUITABLE MATERIAL FROM THE SITE.
3. CONFIRM THAT NO ADVERSE DRAINAGE CONDITIONS ARE PRESENT.
4. CONFIRM THAT NO CONDITIONS ARE PRESENT WHICH ARE DETRIMENTAL TO PLANT GROWTH.
5. CONFIRM THAT UTILITY WORK HAS BEEN COMPLETED PER THE DRAWINGS.
6. CONFIRM THAT IRRIGATION WORK, WHICH IS SHOWN TO BE INSTALLED BELOW PREPARED SOIL LEVELS, HAS BEEN COMPLETED.

B. IF UNSATISFACTORY CONDITIONS ARE ENCOUNTERED, NOTIFY THE OWNER'S REPRESENTATIVE IMMEDIATELY TO DETERMINE CORRECTIVE ACTION BEFORE PROCEEDING.

5.2 COORDINATION WITH PROJECT WORK

A. THE CONTRACTOR SHALL COORDINATE WITH ALL OTHER WORK THAT MAY IMPACT THE COMPLETION OF THE WORK.

B. PRIOR TO THE START OF WORK, PREPARE A DETAILED SCHEDULE OF THE WORK FOR COORDINATION WITH OTHER TRADES.

C. COORDINATE THE RELOCATION OF ANY IRRIGATION LINES, HEADS OR THE CONDUITS OF OTHER UTILITY LINES THAT ARE IN CONFLICT WITH TREE LOCATIONS. ROOT BALLS SHALL NOT BE ALTERED TO FIT AROUND LINES. NOTIFY THE OWNER'S REPRESENTATIVE OF ANY CONFLICTS ENCOUNTERED.

5.3 GRADE AND ELEVATION CONTROL

A. PROVIDE GRADE AND ELEVATION CONTROL DURING INSTALLATION OF PLANTING SOIL. UTILIZE GRADE STAKES, SURVEYING EQUIPMENT, AND OTHER MEANS AND METHODS TO ASSURE THAT GRADES AND CONTOURS CONFORM TO THE GRADES INDICATED ON THE PLANS.

5.4 SITE PREPARATION

A. EXCAVATE TO THE PROPOSED SUBGRADE. MAINTAIN ALL REQUIRED ANGLES OF REPOSE OF THE ADJACENT MATERIALS AS SHOWN ON THE DRAWINGS OR AS REQUIRED BY THIS SPECIFICATION. DO NOT OVER EXCAVATE COMPACTED SUBGRADES OF ADJACENT PAVEMENT OR STRUCTURES. MAINTAIN A SUPPORTING 1:1 SIDE SLOPE OF COMPACTED SUBGRADE MATERIAL ALONG THE EDGES OF ALL PAVING AND STRUCTURES WHERE THE BOTTOM OF THE PAVING OR STRUCTURE IS ABOVE THE BOTTOM ELEVATION OF THE EXCAVATED PLANTING AREA.

B. REMOVE ALL CONSTRUCTION DEBRIS AND MATERIAL INCLUDING ANY CONSTRUCTION MATERIALS FROM THE SUBGRADE.

C. CONFIRM THAT THE SUBGRADE IS AT THE PROPER ELEVATION AND COMPACTED AS REQUIRED. SUBGRADE ELEVATIONS SHALL SLOPE APPROXIMATELY PARALLEL TO THE FINISHED GRADE AND/OR TOWARD THE SUBSURFACE DRAIN LINES AS SHOWN ON THE DRAWINGS.

D. IN AREAS WHERE PLANTING SOIL IS TO BE SPREAD, CONFIRM SUBGRADE HAS BEEN SCARIFIED.

E. PROTECT ADJACENT WALLS, WALKS AND UTILITIES FROM DAMAGE OR STAINING BY THE SOIL. USE 1/2 INCH PLYWOOD AND OR PLASTIC SHEETING AS DIRECTED TO COVER EXISTING CONCRETE, METAL AND MASONRY WORK AND OTHER ITEMS AS DIRECTED DURING THE PROGRESS OF THE WORK.

1. AT THE END OF EACH WORKING DAY, CLEAN UP ANY SOIL OR DIRT SPILLED ON ANY PAVED SURFACE.
2. ANY DAMAGE TO THE PAVING OR SITE FEATURES OR WORK SHALL BE REPAIRED AT THE CONTRACTOR'S EXPENSE.

5.5 CLEAN-UP

A. DURING INSTALLATION, KEEP THE SITE FREE OF TRASH, PAVEMENTS REASONABLY CLEAN AND WORK AREA IN AN ORDERLY CONDITION AT THE END OF EACH DAY. REMOVE TRASH AND DEBRIS IN CONTAINERS FROM THE SITE NO LESS THAN ONCE A WEEK.

1. IMMEDIATELY CLEAN UP ANY SPILLED OR TRACKED SOIL, FUEL, OIL, TRASH OR DEBRIS DEPOSITED BY THE CONTRACTOR FROM ALL SURFACES WITHIN THE PROJECT OR ON PUBLIC RIGHT OF WAYS AND NEIGHBORING PROPERTY.

B. ONCE INSTALLATION IS COMPLETE, WASH ALL SOIL FROM PAVEMENTS AND OTHER STRUCTURES. ENSURE THAT MULCH IS CONFINED TO PLANTING BEDS AND THAT ALL TAGS AND FLAGGING TAPE ARE REMOVED FROM THE SITE. THE OWNER'S REPRESENTATIVE SEALS ARE TO REMAIN ON THE TREES AND REMOVED AT THE END OF THE WARRANTY PERIOD.

1. MAKE ALL REPAIRS TO GRADES, RUTS, AND DAMAGE TO THE WORK OR OTHER WORK AT THE SITE.
2. REMOVE AND DISPOSE OF ALL EXCESS PLANTING SOIL, SUBSOIL, MULCH, PLANTS, PACKAGING, AND OTHER MATERIAL BROUGHT TO THE SITE BY THE CONTRACTOR.

5.6 PLANTING SOIL AND MODIFIED EXISTING SOIL PROTECTION

A. THE CONTRACTOR SHALL PROTECT INSTALLED AND/OR MODIFIED PLANTING SOIL FROM DAMAGE INCLUDING CONTAMINATION AND OVER COMPACTION DUE TO OTHER SOIL INSTALLATION, PLANTING OPERATIONS, AND OPERATIONS BY OTHER CONTRACTORS OR TRESPASSERS. MAINTAIN PROTECTION DURING INSTALLATION UNTIL ACCEPTANCE. UTILIZE FENCING AND MATTING AS REQUIRED OR DIRECTED TO PROTECT THE FINISHED SOIL WORK. TREAT, REPAIR OR REPLACE DAMAGED PLANTING SOIL IMMEDIATELY.

B. LOOSEN COMPACTED PLANTING SOIL AND REPLACE PLANTING SOIL THAT HAS BECOME CONTAMINATED AS DETERMINED BY THE OWNER'S REPRESENTATIVE. PLANTING SOIL SHALL BE LOOSENED OR REPLACED AT NO EXPENSE TO THE OWNER.

1. TILL AND RESTORE GRADES TO ALL SOIL THAT HAS BEEN DRIVEN OVER OR COMPACTED DURING THE INSTALLATION OF PLANTS.
2. WHERE MODIFIED EXISTING SOIL HAS BECOME CONTAMINATED AND NEEDS TO BE REPLACED, PROVIDE IMPORTED SOIL THAT IS OF SIMILAR COMPOSITION, DEPTH AND DENSITY AS THE SOIL THAT WAS REMOVED.

5.7 PROTECTION DURING CONSTRUCTION

A. THE CONTRACTOR SHALL PROTECT PLANTING AND RELATED WORK AND OTHER SITE WORK FROM DAMAGE DUE TO PLANTING OPERATIONS, OPERATIONS BY OTHER CONTRACTORS OR TRESPASSERS.

1. MAINTAIN PROTECTION DURING INSTALLATION UNTIL THE DATE OF PLANT ACCEPTANCE (SEE SPECIFICATIONS SECTION - PLANTING). TREAT, REPAIR OR REPLACE DAMAGED WORK IMMEDIATELY.
2. PROVIDE TEMPORARY EROSION CONTROL AS NEEDED TO STOP SOIL EROSION UNTIL THE SITE IS STABILIZED WITH MULCH, PLANTINGS OR TURF.

B. DAMAGE DONE BY THE CONTRACTOR, OR ANY OF THEIR SUB-CONTRACTORS TO EXISTING OR INSTALLED PLANTS, OR ANY OTHER PARTS OF THE WORK OR EXISTING FEATURES TO REMAIN, INCLUDING LARGE EXISTING TREES, SOIL, PAVING, UTILITIES, LIGHTING, IRRIGATION, OTHER FINISHED WORK AND SURFACES INCLUDING THOSE ON ADJACENT PROPERTY, SHALL BE CLEANED, REPAIRED OR REPLACED BY THE CONTRACTOR AT NO EXPENSE TO THE OWNER. THE OWNER'S REPRESENTATIVE SHALL DETERMINE WHEN SUCH CLEANING, REPLACEMENT OR REPAIR IS SATISFACTORY. DAMAGE TO EXISTING TREES SHALL BE ASSESSED BY A CERTIFIED ARBORIST.

5.8 SUBSTANTIAL COMPLETION ACCEPTANCE

A. UPON WRITTEN NOTICE FROM THE CONTRACTOR, THE OWNERS REPRESENTATIVE SHALL REVIEW THE WORK AND MAKE A DETERMINATION IF THE WORK IS SUBSTANTIALLY COMPLETE.

B. THE DATE OF SUBSTANTIAL COMPLETION OF THE PLANTING SOIL SHALL BE THE DATE WHEN THE OWNER'S REPRESENTATIVE ACCEPTS THAT ALL WORK IN PLANTING, PLANTING SOIL, AND IRRIGATION INSTALLATION SECTIONS IS COMPLETE.

5.9 FINAL ACCEPTANCE / SOIL SETTLEMENT

A. AT THE END OF THE PLANT WARRANTEE AND MAINTENANCE PERIOD, (SEE SPECIFICATION SECTION - PLANTING) THE OWNER'S REPRESENTATIVE SHALL OBSERVE THE SOIL INSTALLATION WORK AND ESTABLISH THAT ALL PROVISIONS OF THE CONTRACT ARE COMPLETE AND THE WORK IS SATISFACTORY.

1. RESTORE ANY SOIL SETTLEMENT AND OR EROSION AREAS TO THE GRADES SHOWN ON THE DRAWINGS. WHEN RESTORING SOIL GRADES REMOVE PLANTS AND MULCH AND ADD SOIL BEFORE RESTORING THE PLANTING. DO NOT ADD SOIL OVER THE ROOT BALLS OF PLANTS OR ON TOP OF MULCH.

B. FAILURE TO PASS ACCEPTANCE: IF THE WORK FAILS TO PASS FINAL ACCEPTANCE, ANY SUBSEQUENT OBSERVATIONS MUST BE RESCHEDULED AS PER ABOVE. THE COST TO THE OWNER FOR ADDITIONAL OBSERVATIONS WILL BE CHARGED TO THE CONTRACTOR AT THE PREVAILING HOURLY RATE OF THE OWNER'S REPRESENTATIVE.

1. DEBRIS REMOVAL SHALL BE UNDERTAKEN AT EACH VISIT TO WEED OR PICK UP TRASH IN BEDS.
2. DAMAGE FROM SITE USE: REPAIR OF DAMAGE BY SITE VISITORS AND EVENTS, BEYOND NORMAL WEAR, ARE NOT PART OF THIS MAINTENANCE. THE OWNER'S REPRESENTATIVE MAY REQUEST THAT THE CONTRACTOR REPAIR DAMAGE BEDS OR PLANTINGS FOR AN ADDITIONAL COST. ALL ADDITIONAL WORK SHALL BE APPROVED IN ADVANCE BY THE OWNER'S REPRESENTATIVE.

5.10 END OF WARRANTY FINAL ACCEPTANCE / MAINTENANCE OBSERVATION

A. AT THE END OF THE WARRANTY AND MAINTENANCE PERIOD THE OWNER'S REPRESENTATIVE SHALL OBSERVE THE WORK AND ESTABLISH THAT ALL PROVISIONS OF THE CONTRACT ARE COMPLETE AND THE WORK IS SATISFACTORY.

1. IF THE WORK IS SATISFACTORY, THE MAINTENANCE PERIOD WILL END ON THE DATE OF THE FINAL OBSERVATION.
2. IF THE WORK IS DEEMED UNSATISFACTORY, THE MAINTENANCE PERIOD WILL CONTINUE AT NO ADDITIONAL EXPENSE TO THE OWNER UNTIL THE WORK HAS BEEN COMPLETED, OBSERVED, AND APPROVED BY THE OWNER'S REPRESENTATIVE.

B. FAILURE TO PASS OBSERVATION: IF THE WORK FAILS TO PASS FINAL OBSERVATION, ANY SUBSEQUENT OBSERVATIONS MUST BE RESCHEDULED AS PER ABOVE. THE COST TO THE OWNER FOR ADDITIONAL OBSERVATIONS WILL BE CHARGED TO THE CONTRACTOR AT THE PREVAILING HOURLY RATE OF THE OWNERS REPRESENTATIVE.

NOTES:
1- TREES SHALL BE OF QUALITY PRESCRIBED IN PROPOSED PLANTING SCHEDULE
2- SEE SPECIFICATIONS FOR FURTHER REQUIREMENTS RELATED TO THIS DETAIL.

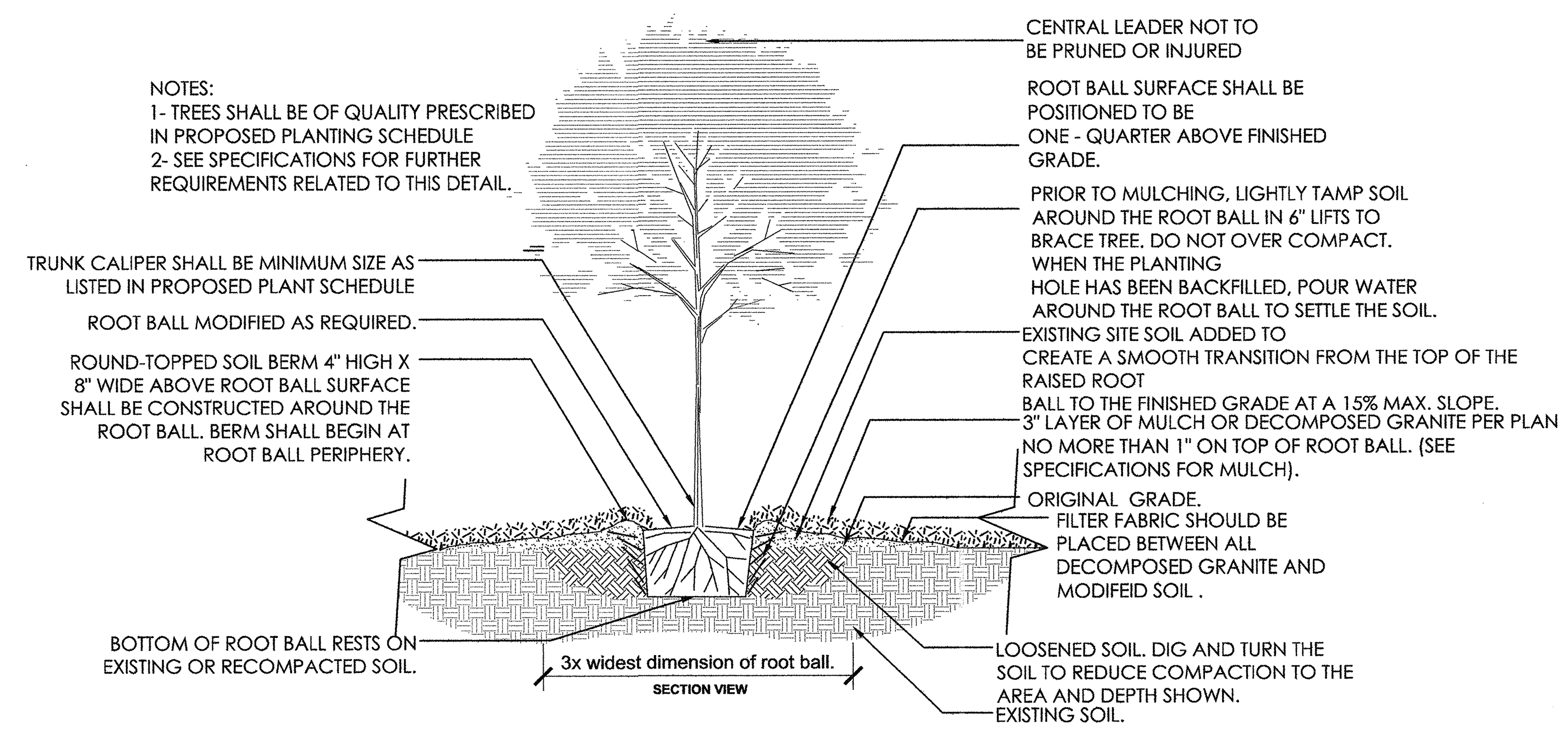

TREE PLANTING

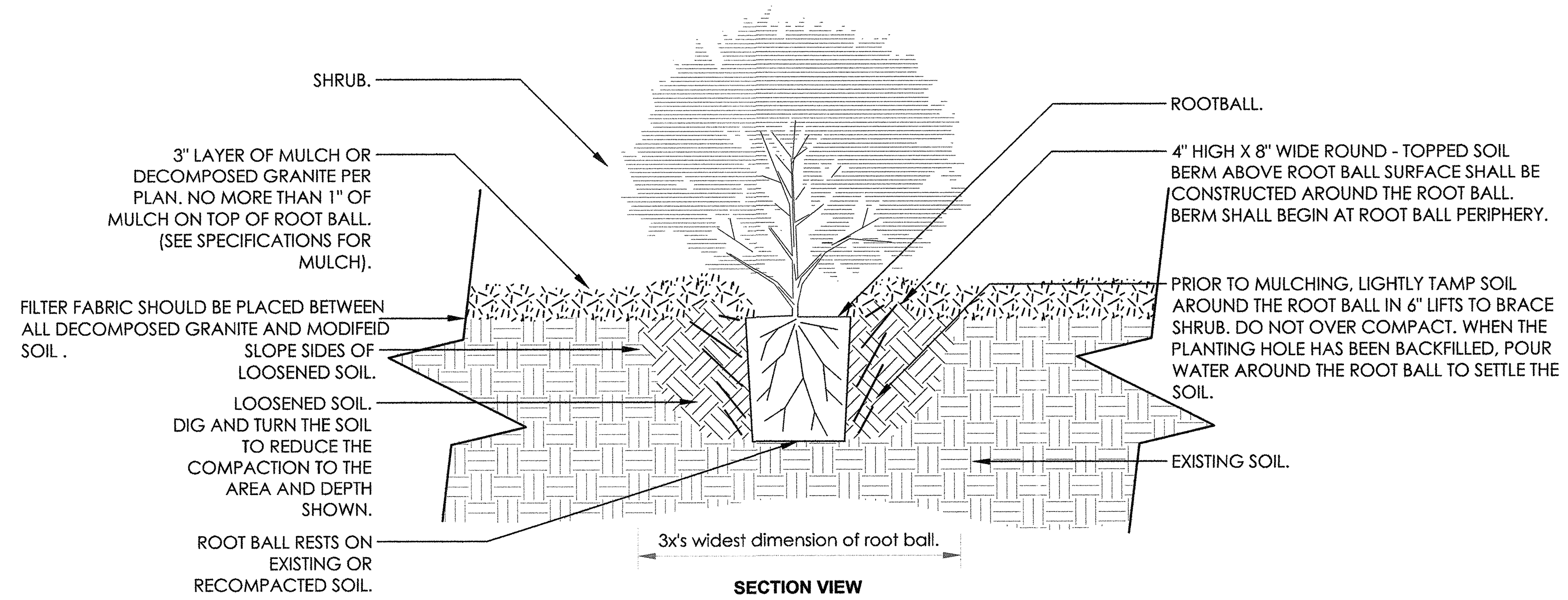

NOTES:
1- SHRUBS SHALL BE OF QUALITY PRESCRIBED IN THE ROOT OBSERVATIONS DETAIL AND SPECIFICATIONS.

2- SEE SPECIFICATIONS FOR FURTHER REQUIREMENTS RELATED TO THIS DETAIL.

SHRUB PLANTING

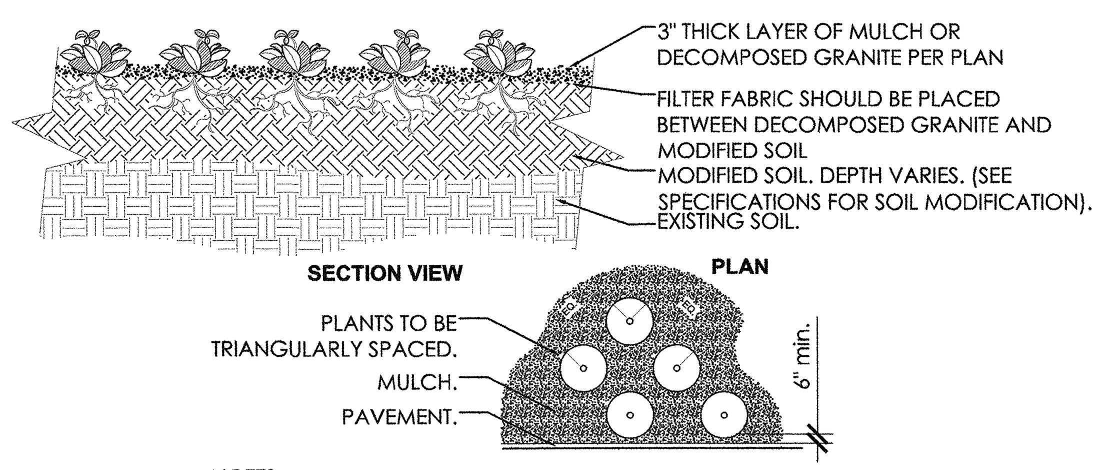

NOTES:
1- SEE PLANTING LEGEND FOR SPECIES, SIZE, AND SPACING DIMENSION.
2- SMALL ROOTS (¼" OR LESS) THAT GROW AROUND, UP, OR DOWN THE ROOT BALL PERIPHERY ARE CONSIDERED A NORMAL CONDITION IN CONTAINER PRODUCTION AND ARE ACCEPTABLE HOWEVER THEY SHOULD BE ELIMINATED AT THE TIME OF PLANTING. ROOTS ON THE PERIPHERY CAN BE REMOVED AT THE TIME OF PLANTING. (SEE ROOT BALL SHAVING CONTAINER DETAIL).
3- SETTLE SOIL AROUND EACH ROOT BALL PRIOR TO MULCHING.

SHRUB AND GROUNDCOVER SPACING

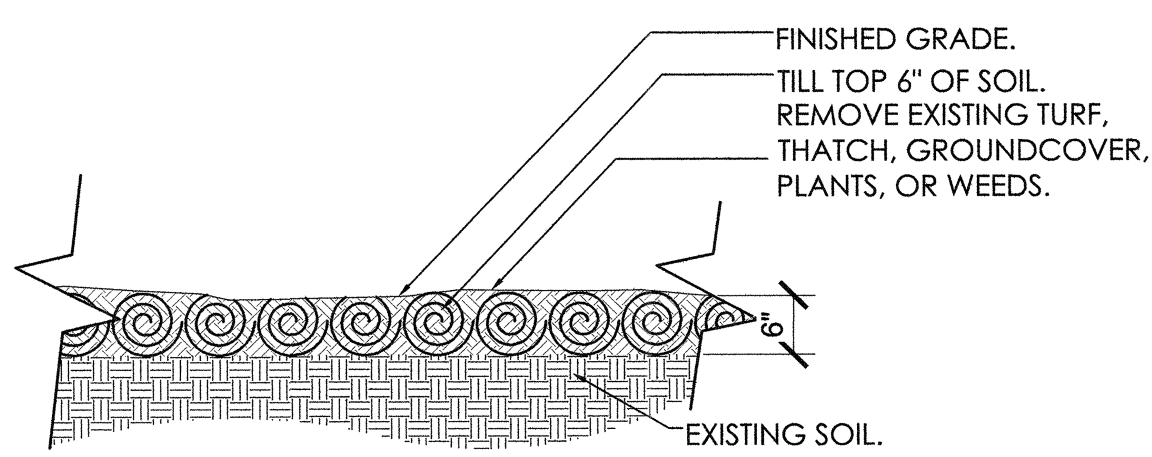

EXISTING SOIL MODIFICATION FOR PROPOSED PLANTING ZONES

KFM ENGINEERING & DESIGN
621 N. MAIN STREET, SUITE 415
GRAPEVINE, TEXAS 76051
PHONE: (817) 416-4536
WWW.KFM-LLC.COM
TBPE #: F-20821

ISSUE:	DESCRIPTION:	DATE:	DELTA:	DESCRIPTION:	DATE:
1	ISSUE FOR CONSTRUCTION	7/13/20			

CLIENT
CA LUCAS LLC

PROJECT
LOT 4 - WAL-MART LUCAS

SHEET TITLE
LANDSCAPE DETAILS

REGISTERED LANDSCAPE ARCHITECT
NATHAN R. PARROTT
3237
STATE OF TEXAS
07/13/2020

PROJECT NUMBER:
010011001

DRAWN BY: ALM
DESIGNED BY: DMP
CHECKED BY: JAM

DATE:
2020/07/13

SHEET:
L1.02

K:\Projects\010011\001\cad\sheet\010011001_lap01-ZLISZEWSKI-7/1/2020 10:41 AM

LOT 1, BLOCK A
WAL-MART LUCAS ADDITION
INST.# 20121206010003070 O.P.R.C.C.T.
REMAINDER OF
WAL-MART REAL ESTATE BUSINESS TRUST,
A DELAWARE STATUTORY TRUST
INST.# 20111111001226530
O.P.R.C.C.T.

LOT 4, BLOCK A
WAL-MART LUCAS ADDITION
INST.# 20121206010003070 O.P.R.C.C.T.
PORTION OF
WAL-MART REAL ESTATE BUSINESS TRUST,
A DELAWARE STATUTORY TRUST
INST.# 20111111001226530
O.P.R.C.C.T.

PROPOSED
BUILDING
11,450 S.F.
FF=642.20

1.426 ACRES
± 62,106 S.F.

1" WATER METER
1" BALL VALVE
1" WYE FILTER
1" D.C.A.
1 1/2" MASTER VALVE / FLOW METER

CONTROLLER

1 1/2" PVC WIRE CONDUIT

"WALMART" MONUMENT SIGN

TREE

EX. 8' SIDEWALK

EX. CONCRETE

EX. ASPHALT

ONE 4" BORE AND SLEEVE

ONE 4" SLEEVE

DETENTION POND WALL

METAL FENCE

RETAINING WALL

RIGHT-OF-WAY DEDICATION

COUNTY ROAD 263
(A.K.A. W. LUCAS ROAD)
100' R.O.W.
VOL. 3465 PG. 272, D.R.C.C.T.
VOL. 3501 PG. 122, D.R.C.C.T.

N

0 10 20 40
SCALE 1:20

LEGEND

- HUNTER PROS-06-PRS30 SERIES POP UP SPRAY HEADS WITH HUNTER MSBN-50H STREAM BUBBLER NOZZLES. (TWO PER TREE)
  SEE INSTALLATION NOTE #13 REGARDING TREE BUBBLER LATERAL PIPE
- HUNTER RZWS-18"-50 SERIES ROOT ZONE WATERING SYSTEM WITH RZWS-SLEEVE AND CAP (TWO PER TREE IN GRAVEL)
  SEE INSTALLATION NOTE #13 REGARDING TREE BUBBLER LATERAL PIPE
- HUNTER PROS-04-PRS30 SERIES POP UP SPRAY HEAD WITH PRO SPRAY SERIES NOZZLE AS NOTED BELOW
- RAINBIRD XERI-BUG SINGLE / MULTI OUTLET (XB-T-10-PC / XBT-10-6) POINT SOURCE DRIP EMITTERS.
  SEE INSTALLATION NOTE #16 REGARDING EMITTER LAYOUT AND CONNECTION TO DRIP VALVE ASSEMBLY
- NETAFIM TECHLINE TLHCVXR5-12 SERIES DRIP TUBE IN SHRUB BED INSTALLED AT 2" DEPTH
  SEE INSTALLATION NOTE #16 REGARDING DRIP TUBE LAYOUT IN SHRUB BEDS.
- HUNTER PGP ULTRA, ADJUSTABLE ARC 4" POP UP ROTARY HEAD, PART CIRCLE, #3.0 BLUE NOZZLE UNLESS NOTED OTHERWISE
- HUNTER ICV SERIES ELECTRIC REMOTE CONTROL VALVE
- HUNTER ICV SERIES ELECTRIC REMOTE CONTROL, "TREE BUBBLER ZONE" VALVE
  SEE INSTALLATION NOTE #13 REGARDING TREE BUBBLER LATERAL PIPE
- NETAFIM LVCZ SERIES DRIP VALVE ASSEMBLY WITH 42 PSI REGULATOR AND 140 MESH FILTER
  USE MODEL LVCZ5801007S-LF FOR DRIP ZONES WITH .25 TO 4.4 GPM FLOW RATE WITH PRESSURE REGULATOR MODEL #PRV075LF42V2K
  USE MODEL LVCZ10075 FOR DRIP ZONES WITH 4.5 TO 17.6 GPM FLOW RATE WITH PRESSURE REGULATOR MODEL #PRV075HF45V2K
- HUNTER HQ-33-LRC-R QUICK COUPLING VALVE WITH LOCKING PURPLE COVER AND 3/4" PVC BALL VALVE
- 1" WILKINS 350 SERIES D.C.A. INSTALLED PER CITY CODE, WITH SAME SIZE WILKINS 850 SERIES BRONZE BALL VALVE AND WILKINS YB SERIES BRONZE WYE FILTER WITH 20 MESH STAINLESS STEEL SCREEN
- 1" IRRIGATION WATER METER AND TAP
- 1 1/2" HUNTER ICV ELECTRIC "MASTER" VALVE AND HFS FLOW SENSOR WITH FCT
- HUNTER A2C-1200-M SERIES AUTOMATIC CONTROLLER, ONE A2M-600 EXPANSION MODULE, AND WRFC WIRELESS RAIN / FREEZE SENSOR
  LOCATE SENSOR AS FIELD DIRECTED BY THE LANDSCAPE ARCHITECT
- CLASS 200 PVC MAINLINE PIPE
- CLASS 200 (EXCEPT 1/2 INCH #315) PVC LATERAL PIPE
- ONE 2" CLASS 200 SLEEVE PIPE, UNLESS NOTED OTHERWISE
- ONE 4" AND ONE 2" CLASS 200 SLEEVE PIPES, UNLESS NOTED OTHERWISE

BORES SHALL BE REQUIRED AT ALL EXISTING PAVEMENT CROSSINGS.

- 1 1/2" PVC CONDUIT WITH LONG RADIUS SWEEP FITTINGS

L.I.C. SHALL SELECT PRO-SPRAY SPRAY NOZZLES FOR "HEAD-TO-HEAD" COVERAGE, ADJUSTED FOR NO OVERSPRAY ONTO WALLS AND WALKS. NO OVERSPRAY INTO STREETS IS PERMITTED.

CONTROLLER STATION — VALVE SIZE
FLOW IN G.P.M.
APPROX. LINEAR FOOTAGE OF DRIP TUBE

James Pole
IRRIGATION CONSULTANTS
IRRIGATION DESIGN, CONSULTING, AND LANDSCAPE WATER MANAGEMENT
TEXAS L.I.C. #658
100 N. LOCUST ST., SUITE 3
DENTON, TEXAS 76201
PHONE: 940.243.2364
FAX: 940.382.2475
james@jamespoleirrigation.com

EPA WaterSense PARTNER

IRRIGATION IN TEXAS IS REGULATED BY THE TEXAS COMMISSION ON ENVIRONMENTAL QUALITY (TCEQ) (MC-178) P.O. BOX 13087 T.C.E.Q.'S WEB SITE IS: WWW.TCEQ.STATE.TX.US

KFM ENGINEERING & DESIGN
621 N. MAIN STREET, SUITE 415
GRAPEVINE, TEXAS 76051
PHONE: (817) 416-4536
WWW.KFMLLC.COM
TBPE #: F-20821

ISSUE:	DESCRIPTION:	DATE:	DELTA:	DESCRIPTION:	DATE:

CLIENT
CA LUCAS LLC

PROJECT
LOT 4 - WAL-MART LUCAS
LOT 4, BLOCK A
WAL-MART LUCAS ADDITION

SHEET TITLE
IRRIGATION PLAN

STATE OF TEXAS — JAMES POLE — 658 — LICENSED IRRIGATOR

05 / 06 / 2020

PROJECT NUMBER: 010011001

DRAWN BY:	DESIGNED BY:	CHECKED BY:
AF	AF	MP

DATE: 2020/05/01

SHEET:
IR01

C:\Users\AJames Pole Irri. Dropbox\Irrigation\KFM Engineering\Chipotle\Lucas\050420\010011001 IR 050520-A-5/5/2020 9:42 PM

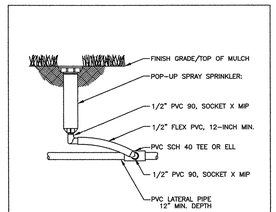

POP-UP SPRAY HEAD

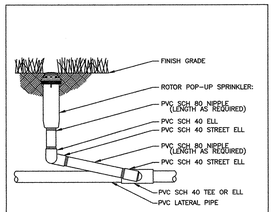

ROTOR POP-UP SPRINKLER

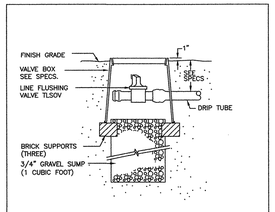

MANUAL LINE FLUSH VALVE

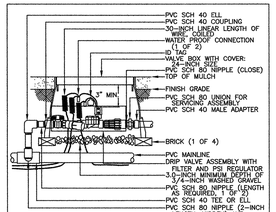

CONTROL ZONE KIT

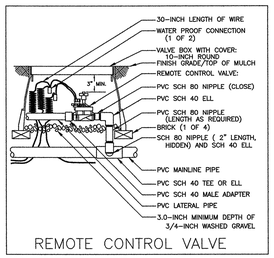

REMOTE CONTROL VALVE

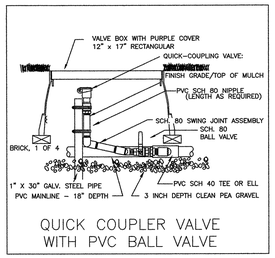

QUICK COUPLER VALVE WITH PVC BALL VALVE

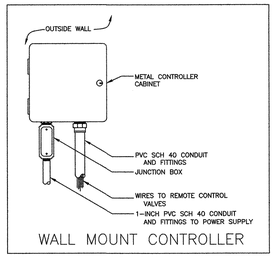

WALL MOUNT CONTROLLER

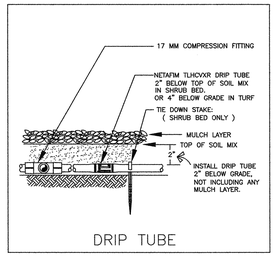

DRIP TUBE

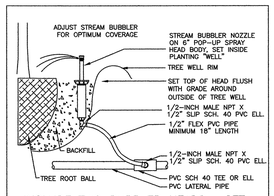

INCLUDE TWO BUBBLER HEADS, SET ON OPPOSITE SIDES OF ROOT BALL

TREE BUBBLER

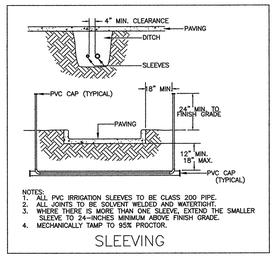

NOTES:
1. ALL PVC IRRIGATION SLEEVES TO BE CLASS 200 PIPE.
2. ALL JOINTS TO BE SOLVENT WELDED AND WATERTIGHT.
3. WHERE THERE IS MORE THAN ONE SLEEVE, EXTEND THE SMALLER SLEEVE TO 24-INCHES MINIMUM ABOVE FINISH GRADE.
4. MECHANICALLY TAMP TO 95% PROCTOR.

SLEEVING

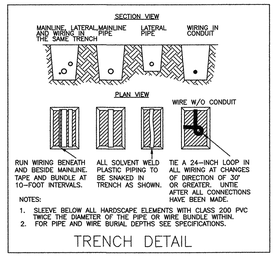

NOTES:
1. SLEEVE BELOW ALL HARDSCAPE ELEMENTS WITH CLASS 200 PVC TWICE THE DIAMETER OF THE PIPE OR WIRE BUNDLE WITHIN.
2. FOR PIPE AND WIRE BURIAL DEPTHS SEE SPECIFICATIONS.

TRENCH DETAIL

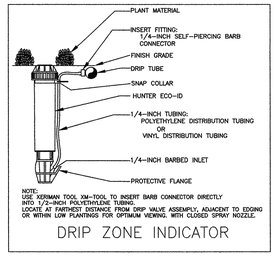

NOTE:
USE KERMAN TOOL XM-TOOL TO INSERT BARB CONNECTOR DIRECTLY INTO 1/2-INCH POLYETHYLENE TUBING.
LOCATE AT FARTHEST DISTANCE FROM DRIP VALVE ASSEMBLY, ADJACENT TO EDGING OR WITHIN LOW PLANTINGS FOR OPTIMUM VIEWING. WITH CLOSED SPRAY NOZZLE.

DRIP ZONE INDICATOR

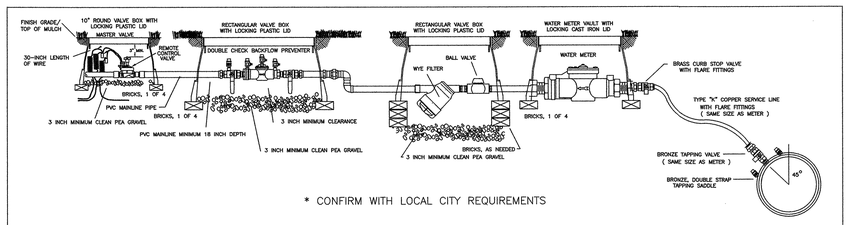

* CONFIRM WITH LOCAL CITY REQUIREMENTS

WATER TAP WITH METER, BALL VALVE, WYE FILTER, BACKFLOW ASSEMBLY, AND MASTER VALVE

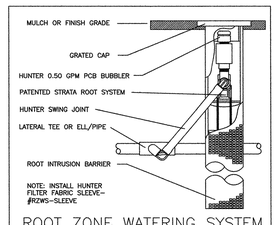

ROOT ZONE WATERING SYSTEM (TWO PER TREE)

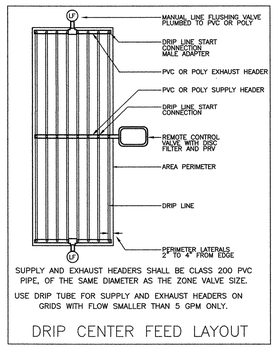

SUPPLY AND EXHAUST HEADERS SHALL BE CLASS 200 PVC PIPE, OF THE SAME DIAMETER AS THE ZONE VALVE SIZE.

USE DRIP TUBE FOR SUPPLY AND EXHAUST HEADERS ON GRIDS WITH FLOW SMALLER THAN 5 GPM ONLY.

DRIP CENTER FEED LAYOUT

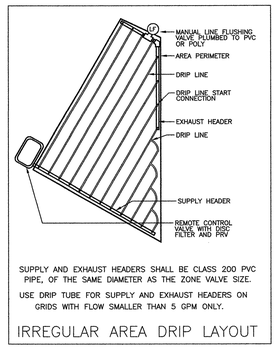

SUPPLY AND EXHAUST HEADERS SHALL BE CLASS 200 PVC PIPE, OF THE SAME DIAMETER AS THE ZONE VALVE SIZE.

USE DRIP TUBE FOR SUPPLY AND EXHAUST HEADERS ON GRIDS WITH FLOW SMALLER THAN 5 GPM ONLY.

IRREGULAR AREA DRIP LAYOUT

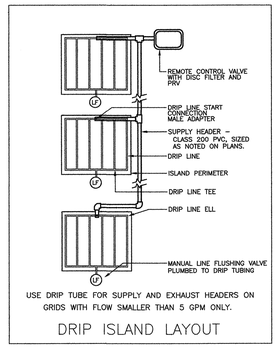

USE DRIP TUBE FOR SUPPLY AND EXHAUST HEADERS ON GRIDS WITH FLOW SMALLER THAN 5 GPM ONLY.

DRIP ISLAND LAYOUT

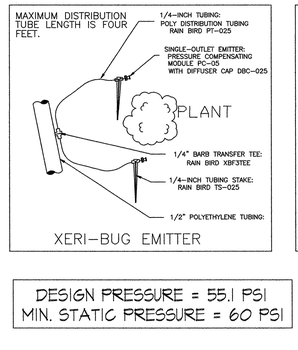

XERI-BUG EMITTER

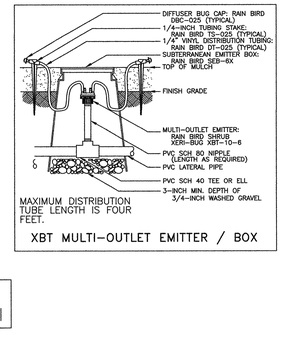

MAXIMUM DISTRIBUTION TUBE LENGTH IS FOUR FEET.

XBT MULTI-OUTLET EMITTER / BOX

DESIGN PRESSURE = 55.1 PSI
MIN. STATIC PRESSURE = 60 PSI

INSTALLATION NOTES

1. COORDINATE IRRIGATION INSTALLATION WITH PLANTING PLAN AND SITE CONDITIONS TO PROVIDE COMPLETE COVERAGE WITH MINIMUM OVERSPRAY. THE IRRIGATION CONTRACTOR SHALL MAKE MINOR ADJUSTMENTS TO ENSURE PROPER COVERAGE AT NO ADDITIONAL COST TO THE OWNER. THE IRRIGATION CONTRACTOR SHALL COMPLY WITH ALL LOCAL AND STATE MANDATED IRRIGATION ORDINANCES AND CODES, AND WILL SECURE ALL REQUIRED PERMITS. L.I.C. SHALL PAY ANY ASSOCIATED FEES UNLESS OTHERWISE NOTED. ALL LOCAL CODES SHALL PREVAIL OVER ANY DISCREPANCIES HEREIN AND SHALL BE ADDRESSED BEFORE ANY CONSTRUCTION BEGINS.
2. NO MACHINE TRENCHING SHALL BE PERMITTED WITHIN THE ROOT ZONE OF EXISTING TREES. HAND-DIG ONLY, WITHIN THE ROOT ZONES OF EXISTING TREES. NO ROOTS OVER 1" DIAMETER SHALL BE CUT. STAKE ALL PROPOSED TRENCH ROUTES NEAR EXISTING TREES FOR APPROVAL BY THE LANDSCAPE ARCHITECT BEFORE DIGGING BEGINS.
3. CONFIRM MINIMUM STATIC WATER PRESSURE OF 60 PSI AT THE HIGHEST ELEVATION OF THE SYSTEM LIMITS, AND MAXIMUM STATIC WATER PRESSURE OF 90 P.S.I. AT THE LOWEST ELEVATION OF THE SYSTEM LIMITS AT LEAST 7 DAYS BEFORE BEGINNING WORK. IF STATIC WATER PRESSURE IS OUTSIDE THE RANGE STATED ABOVE, DO NOT PROCEED UNTIL DIRECTED BY THE LANDSCAPE ARCHITECT.
4. LATERAL PIPE SHALL BE INSTALLED AT A MINIMUM DEPTH OF 12 INCHES. MAINLINE PIPE AND WIRES SHALL BE INSTALLED AT A MINIMUM DEPTH OF 18 INCHES. NO MACHINE TRENCHING SHALL BE PERMITTED WITHIN EXISTING TREE ROOT ZONES. WHEN HAND - TRENCHING WITHIN EXISTING TREE ROOT ZONES, NO ROOTS LARGER THAN 1" DIAMETER SHALL BE CUT.
5. ALL PIPES AND WIRES LOCATED UNDER PAVEMENT SHALL BE INSTALLED WITHIN PVC SLEEVES. UNSLEEVED PIPES MAY BE SHOWN UNDER PAVEMENT FOR GRAPHIC CLARITY ONLY. INSTALL THESE PIPES IN ADJACENT LANDSCAPED AREAS.
6. UNLESS NOTED OTHERWISE, ELECTRIC POWER SHALL BE PROVIDED WITHIN FIVE FEET OF CONTROLLER LOCATION BY GENERAL CONTRACTOR. L.I.C. TO PROVIDE FINAL HARD-WIRE TO CONTROLLER. UNSECURED "PLUG-IN" OUTLETS SHALL NOT BE USED WITH EXTERIOR CONTROLLER INSTALLATIONS.
7. 24 VOLT VALVE WIRE SHALL BE A MINIMUM OF #14 GAUGE, U.F. APPROVED FOR DIRECT BURIAL, SINGLE CONDUCTOR "IRRIGATION WIRE". WIRE SPLICES SHALL INCLUDE DBY CONNECTORS AS MANUFACTURED BY 3M COMPANY. LOCATE FIELD SPLICES IN A ROUND VALVE BOX OF SUFFICIENT SIZE TO ALLOW INSPECTION. TAPE WIRE BUNDLES EVERY 20 L.F.
8. VALVE BOXES SHALL BE INSTALLED FLUSH WITH GRADE, SUPPORTED BY BRICKS IF NEEDED, WITH 3 INCHES CLEAN PEA GRAVEL LOCATED BELOW THE VALVE. USE 12" X 17" RECTANGULAR VALVE BOXES WITH PURPLE LID FOR QUICK COUPLING VALVES AND 10" ROUND BOXES FOR ELECTRIC VALVES UNLESS NOTED OTHERWISE. D.C.A., WITH UPSTREAM BALL VALVE AND AYE FILTER SHALL BE BOXED AND LOCATED ACCORDING TO LOCAL CODE. THE PROPOSED LOCATIONS OF ALL VALVE BOXES SHALL BE STAKED BY THE CONTRACTOR FOR APPROVAL BY THE LANDSCAPE ARCHITECT OR THE OWNER'S REPRESENTATIVE BEFORE INSTALLATION.
9. USE MANUFACTURED SCH. 80 PVC, O-RING TYPE SWING JOINT ASSEMBLIES TO CONNECT ALL ROTARY HEADS AND QUICK COUPLERS.
10. ALL SPRAY HEADS SHALL BE CONNECTED WITH A 12" MINIMUM LENGTH OF 1/2" FLEX PVC. THE FLEX PVC SHALL BE SOLVENT WELDED TO SCHEDULE 40 PVC FITTINGS WITH WELD-ON #795 SOLVENT AND #P-70 PRIMER.
11. PROVIDE ONE QUICK COUPLER KEY WITH SWIVEL HOSE ELL FOR EVERY SIX Q.C. VALVES. (MINIMUM ONE SET).
12. CONTRACTOR IS TO CONTACT APPROPRIATE AUTHORITIES AND LOCATE ALL UTILITIES PRIOR TO CONSTRUCTION.
13. LATERAL PIPE TO TREE STREAM BUBBLER HEADS IS OMITTED FOR GRAPHIC CLARITY. CONNECT TREE BUBBLER HEADS TO VALVES AS SHOWN WITH CLASS 200 PVC PIPE SIZED TO ALLOW A MAXIMUM FLOW VELOCITY OF 5 FEET PER SECOND
14. THE PROPOSED LOCATIONS OF ALL ABOVE- GROUND EQUIPMENT INCLUDING BACKFLOW PREVENTERS, CONTROLLERS AND WEATHER SENSORS SHALL BE STAKED BY THE CONTRACTOR FOR APPROVAL BY THE LANDSCAPE ARCHITECT OR OWNER'S REPRESENTATIVE BEFORE THESE ITEMS ARE INSTALLED.
15. ALL HEADS SHALL BE INSTALLED A MINIMUM OF 4" FROM PAVEMENT EDGES. (6" OR GREATER WHERE REQUIRED BY LOCAL CODE) FINAL HEAD ADJUSTMENTS BY THE CONTRACTOR SHALL INCLUDE ARC AND DISTANCE NOZZLE CHANGES, AND THE ADDITION OF CHECK VALVES AT HEADS, WHERE NEEDED, TO PREVENT EXCESSIVE LOW HEAD DRAINAGE. THE CONTRACTOR SHALL BUDGET FOR AND INSTALL CHECK VALVES FOR UP 10% OF THE TOTAL NUMBER OF HEADS, IF NEEDED, WITH NO ADDITIONAL CHARGE TO THE OWNER.
16. WHERE SHOWN ON THE PLANS, MASS SHRUB / GROUNDCOVER BEDS SHALL INCLUDE NETAFIM TECHLINE TLHCVXR SERIES DRIP TUBE WITH PRE-INSTALLED .55 GPH DRIP EMITTERS AT 12" INTERVALS (TLHCVXR5-12), INSTALLED IN CENTER-FED GRIDS WITH ROWS SPACED 18" APART. INDIVIDUAL DRIP TUBE RUNS SHALL NOT EXCEED 150 L.F. PVC LATERAL "TRUNK" LINES SHALL BE INSTALLED 10" DEEP. DRIP TUBE SHALL BE SET 2" BELOW FINISHED SOIL GRADE (NOT INCLUDING MULCH LAYER), SECURELY STAKED EVERY 18". NETAFIM #TLOSOMFV-I FLUSH VALVES SHALL BE INSTALLED AT THE FARTHEST POINTS FROM THE ZONE VALVE. USE 17 MM BARBED FITTINGS FOR DRIP LINE CONNECTIONS, SET THE MAXIMUM OPERATING PRESSURE AT 30 PSI. TECHLINE CV SHALL BE INSTALLED PERPENDICULAR TO SLOPE FACE. INSTALL TLCV IN-LINE CHECK VALVES FOR EVERY 4.5 FEET OF DRIP LINE ELEVATION CHANGE WITHIN THE ZONE. USE NETAFIM STAPLES (#TLS6) TO SECURE TUBING EVERY 18" EACH DRIP ZONE SHALL INCLUDE ONE MAINTENANCE "FLAG" WHICH SHALL CONSIST OF A 12" POP-UP SPRAY HEAD AND COMPLETELY CLOSED SPRAY NOZZLE. THE POP-UP HEAD SHALL BE CONNECTED TO THE DRIP ZONE PIPE, SET FLUSH WITH GRADE, AND LOCATED AT THE FARTHEST DISTANCE FROM THE DRIP VALVE ASSEMBLY. INSTALL THE "FLAG" HEAD ADJACENT TO EDGING OR IN LOW PLANTINGS FOR EASE OF VIEWING. SPARSELY SPACED, INDIVIDUAL SHRUB PLANTINGS MAY INCLUDE RAINBIRD #XBT-10 SINGLE-OUTLET EMITTERS OR RAINBIRD #XBT-10-6 MULTI-OUTLET EMITTERS INSTALLED AS DETAILED. PROVIDE MINIMUM TWO, 1 G.P.H. OUTLETS PER INDIVIDUAL SHRUB. SINGLE / MULTI-OUTLET EMITTERS MAY BE CONNECTED TO THE SAME DRIP ZONE VALVE WHICH SERVES ADJACENT DRIP TUBE GRIDS, UNLESS NOTED OTHERWISE.

HYDRAULIC CALCULATIONS

WORST CASE ZONES (LARGEST FLOW / FARTHEST FROM SOURCE)

1.	LOSS AT SERVICE LINE:	3.0 PSI
2.	LOSS AT 1" WATER METER FOR 24 GPM:	3.4 PSI
3.	LOSS AT 1" BACKFLOW PREVENTER:	5.0 PSI
4.	LOSS AT 1 1/2" MASTER VALVE:	1.5 PSI
5.	LOSS AT LOOPED 1 1/2" MAINLINE:	1.7 PSI
6.	LOSS AT 1 1/2" ELECTRIC VALVE:	1.5 PSI
7.	LOSS AT SECTION LATERAL PVC PIPE:	4.0 PSI
8.	LOSS AT ROTOR HEAD NOZZLE:	35 PSI
	TOTAL PRESSURE LOSS	55.1 PSI

EPA WaterSense PARTNER

IRRIGATION IN TEXAS IS REGULATED BY THE TEXAS COMMISSION ON ENVIRONMENTAL QUALITY (TCEQ) (MC-178) P.O. BOX 13087 T.C.E.Q.'S WEB SITE IS: WWW.TCEQ.STATE.TX.US

James Pole
IRRIGATION CONSULTANTS
IRRIGATION DESIGN, CONSULTING, AND LANDSCAPE WATER MANAGEMENT
TEXAS LIC. #658
100 N. LOCUST ST., SUITE 3
DENTON, TEXAS 76201
PHONE: 940.243.2364
FAX: 940.382.2475
james@jamespoleirrigation.com

KFM ENGINEERING & DESIGN
621 N. MAIN STREET, SUITE 415
GRAPEVINE, TEXAS 76051
PHONE: (817) 416-4536
WWW.KFM-LLC.COM
TBPE #: F-20821

ISSUE:	DESCRIPTION:	DATE:	DELTA:	DESCRIPTION:	DATE:

CLIENT
CA LUCAS LLC

PROJECT
LOT 4 - WAL-MART LUCAS
LOT 4, BLOCK A
WAL-MART LUCAS ADDITION

SHEET TITLE
IRRIGATION DETAILS

STATE OF TEXAS — JAMES POLE — 658 — LICENSED IRRIGATOR

05 / 06 / 2020

PROJECT NUMBER: 010011001

DRAWN BY:	DESIGNED BY:	CHECKED BY:
AF	AF	MP

DATE: 2020/05/01

SHEET: IR02

C:\Users\A\James Pole Irri. Dropbox\Irrigation\KFM Engineering\Chipotle\Lucas\050420100110001_IR 050520-A-5/5/2020 9:42 PM

OWNER:
CA LUCAS, LLC
8350 NORTH CENTRAL EXPRESSWAY, SUITE 1313
DALLAS, TEXAS 75206
CONTACT: CHAD DUBOSE
214-701-8455 (VOICE)
Chad@foremark.com

ARCHITECT:
DONALD F. SOPRANZI, AIA, LEED-AP
ARCHITECT
10300 NORTH CENTRAL EXPRESSWAY, SUITE 450
DALLAS, TEXAS 75231
CONTACT: DONALD SOPRANZI
817-903-6663 (VOICE)
dons@dfsarchitect.com

CIVIL ENGINEER:
KFM ENGINEERING & DESIGN
621 NORTH MAIN STREET, SUITE 415
GRAPEVINE, TEXAS 76051
CONTACT: DAVID PITCHER
817-416-4536 (VOICE)
dpitcher@kfm-llc.com

LANDSCAPE ARCHITECT:
KFM ENGINEERING & DESIGN
621 NORTH MAIN STREET, SUITE 415
GRAPEVINE, TEXAS 76051
CONTACT: NATHAN PARROT
817-416-4536 (VOICE)
nparrot@kfm-llc.com

STRUCTURAL ENGINEER:
GROUP STRUCTURAL ENGINEERING, INC.
3626 NORTH HALL STREET, SUITE 810
DALLAS, TEXAS 75219
CONTACT: HERMAN GUNAWAN
214-397-0455 (VOICE)
herman@groupstructural.com

MECHANICAL/ELECTRICAL ENGINEER:
R SQUARED CONSULTING ENGINEERS
4720 WORCHESTER LANE
McKINNEY, TEXAS 75070
CONTACT: RUDY SOLIS
469-261-0987 (VOICE)
rsolis@r2engineers.com

GEOTECHNICAL ENGINEER:
ALPHA TESTING, INC.
2209 WISCONSIN STREET, SUITE 100
DALLAS, TEXAS 75229
CONTACT: DAVID SCHLEDORN
972-421-2947 (VOICE)
dschledorn@alphatesting.com

13 PROJECT DIRECTORY

ZONING: CB COMMERCIAL BUSINESS DISTRICT

BUILDING SIZE: 11,438 SF

BUILDING HEIGHT: 1 STORY (23'-0")

FIRE PROTECTION: SPRINKLERED

ANTICIPATED USE: RETAIL / RESTAURANT (SHELL ONLY)

STATEMENT OF JURISDICTION

"THE TEXAS BOARD OF ARCHITECTURAL EXAMINERS HAS JURISDICTION OVER COMPLAINTS REGARDING THE PROFESSIONAL PRACTICES OF ARCHITECTS IN TEXAS. THE BOARD'S CURRENT MAILING ADDRESS AND TELEPHONE NUMBER ARE: PO BOX 12337 AUSTIN, TEXAS 78701. TELEPHONE (512) 385.9000."

19 PROJECT DATA

SHELL ONLY

THE SHOPS AT LUCAS

2650 WEST LUCAS ROAD LUCAS, TEXAS 75002

20 BUILDING CODE ANALYSIS

APPLICABLE CODES:

2015 INTERNATIONAL BUILDING CODE, WITH LOCAL AMENDMENTS.
2015 INTERNATIONAL MECHANICAL CODE, WITH LOCAL AMENDMENTS.
2015 INTERNATIONAL PLUMBING CODE, WITH LOCAL AMENDMENTS.
2015 INTERNATIONAL ENERGY CONSERVATION CODE, WITH LOCAL AMENDMENTS.
2015 INTERNATIONAL FIRE CODE, WITH LOCAL AMENDMENTS.
2017 NATIONAL ELECTRIC CODE, WITH LOCAL AMENDMENTS.
2012 TEXAS ACCESSIBILITY STANDARDS

USE AND OCCUPANCY CLASSIFICATION:
SECTION 303 – GROUP A-2 RESTAURANT (ANTICIPATED USE)
SECTION 309 – GROUP M RETAIL (ANTICIPATED USE)

GENERAL BUILDING HEIGHTS AND AREAS:
SECTION 501.2 – ADDRESS IDENTIFICATION
NEW AND EXISTING BUILDINGS SHALL BE PROVIDED WITH APPROVED ADDRESS IDENTIFICATION. THE ADDRESS IDENTIFICATION SHALL BE LEGIBLE AND PLACED IN A POSITION THAT IS VISIBLE FROM THE STREET OR ROAD FRONTING THE PROPERTY. ADDRESS IDENTIFICATION CHARACTERS SHALL CONTRAST WITH THEIR BACKGROUND. EACH CHARACTER SHALL BE A MINIMUM OF 4 INCHES HIGH WITH A MINIMUM STROKE WIDTH OF ½ INCH. ADDRESS IDENTIFICATION SHALL BE MAINTAINED.

SECTION 504 – BUILDING HEIGHT AND NUMBER OF STORIES
TABLE 504.3 – GROUP A AND M, TYPE II-B CONSTRUCTION = 55 FEET
TABLE 504.4 – GROUP A-2, TYPE II-B CONSTRUCTION = 3 STORIES
GROUP M, TYPE II-B CONSTRUCTION = 3 STORIES
SECTION 506 – BUILDING AREA
TABLE 506.2 – GROUP A-2, TYPE II-B CONSTRUCTION = 38,000 SQUARE FEET
GROUP M, TYPE II-B CONSTRUCTION = 50,000 SQUARE FEET

SECTION 508.3.1 – NON-SEPARATED OCCUPANCIES SHALL BE INDIVIDUALLY CLASSIFIED IN ACCORDANCE WITH SECTION 302.1. THE REQUIREMENTS OF THIS CODE SHALL APPLY TO EACH PORTION OF THE BUILDING BASED ON THE OCCUPANCY CLASSIFICATION OF THAT SPACE. IN ADDITION, THE MOST RESTRICTIVE PROVISIONS OF CHAPTER 9 THAT APPLY TO THE NON-SEPARATED OCCUPANCIES SHALL APPLY TO THE TOTAL NON-SEPARATED OCCUPANCY AREA.

SECTION 508.3.3 – NO SEPARATION IS REQUIRED BETWEEN NON-SEPARATED AREAS.

TYPES OF CONSTRUCTION:
SECTION 602.1 – GENERAL
BUILDING ELEMENTS SHALL HAVE A FIRE-RESISTANCE RATING OF ZERO HOURS (TABLE 601) AND EXTERIOR WALLS WITH A FIRE SEPARATION DISTANCE GREATER THAN 30 FEET SHALL HAVE A FIRE-RESISTANCE RATING OF 0 HOURS. (TABLE 602).

SECTION 602.2 – TYPE II CONSTRUCTION IS THAT TYPE OF CONSTRUCTION IN WHICH THE STRUCTURAL ELEMENTS, EXTERIOR WALLS, AND INTERIOR WALLS ARE OF NON-COMBUSTIBLE MATERIALS EXCEPT AS PERMITTED BY THIS CODE.

FIRE-RESISTANCE RATED CONSTRUCTION:
SECTION 705 – EXTERIOR WALLS
SECTION 705.2.1 – PROJECTIONS FROM WALLS OF TYPE II CONSTRUCTION SHALL BE OF NON-COMBUSTABLE MATERIALS.

BUILDINGS WHOSE EXTERIOR WALL, EXTERIOR NON-BEARING WALL, AND EXTERIOR STRUCTURAL FRAME ARE NOT REQUIRED TO BE FIRE-RESISTANCE RATED SHALL BE PERMITTED TO HAVE UNLIMITED UNPROTECTED OPENINGS (TABLE 705.8.).

SECTION 705.11 – A PARAPET NEED NOT BE PROVIDED ON AN EXTERIOR WALL WHERE THE WALL IS NOT REQUIRED TO BE FIRE-RESISTANCE RATED BECAUSE OF THE FIRE SEPARATION DISTANCE.

FIRE PROTECTION SYSTEMS:
SECTION 903 – AUTOMATIC SPRINKLER SYSTEMS
AUTOMATIC SPRINKLER SYSTEMS ARE REQUIRED IN ALL NEW GROUP A-2 BUILDINGS WITH A FIRE AREA EXCEEDING 5,000 SQUARE FEET OR AN OCCUPANT LOAD OF 100 OR MORE.
SECTION 907 – FIRE ALARM AND DETECTION SYSTEMS
A MANUAL FIRE ALARM SYSTEM IS NOT REQUIRED IN GROUP A OCCUPANCIES HAVING AN OCCUPANT LOAD OF LESS THAN 300.

MEANS OF EGRESS (FOR MOST RESTRICTIVE ANTICIPATED USE):
SECTION 1004 – OCCUPANT LOAD FOR ASSEMBLY AREAS: 15 S.F. (NET) PER OCCUPANT.
OCCUPANT LOAD FOR KITCHEN AREAS: 200 S.F. (GROSS) PER OCCUPANT.
OCCUPANT LOAD FOR STORAGE AREAS: 300 S.F. (GROSS) PER OCCUPANT.

SECTION 1005 – MINIMUM REQUIRED EGRESS WIDTH IN A SPRINKLERED BUILDING FOR COMPONENTS OTHER THAN STAIRWAYS IS THE TOTAL OCCUPANT LOAD X 0.15 (INCHES PER OCCUPANT)

SECTION 1006.2.1 – TWO EXITS MUST BE PROVIDED FROM A SPACE IN AN "A" OR "M" OCCUPANCY WHEN THE OCCUPANT LOAD EXCEEDS 49 OR THE COMMON PATH OF EGRESS TRAVEL EXCEEDS 75 FEET.

SECTION 1007.1.1 – IN A SPRINKLERED BUILDING, THE SEPARATION DISTANCE OF THE EXIT DOORS OR EXIT ACCESS DOORWAYS MUST NOT BE LESS THAN ⅓ OF THE LENGTH OF THE MAXIMUM OVERALL DIAGONAL DIMENSION OF THE SPACE SERVED.

SECTION 1010.1.1 – DOORS MUST HAVE A MINIMUM OPENING WIDTH OF 32 INCHES WITH THE DOOR IN A 90 DEGREE POSITION. THE MAXIMUM WIDTH OF A DOOR LEAF IS 48 INCHES.

SECTION 1017 – N A SPRINKLERED BUILDING, THE MAXIMUM LENGTH OF EXIT ACCESS TRAVEL IN AN "A" OR "M" OCCUPANCY IS 250 FEET.

SECTION 1020 – CORRIDOR FIRE RESISTANCE RATING FOR "A" OR "M" OCCUPANCIES WITH OCCUPANT LOADS GREATER THAN 30 IN A SPRINKLERED BUILDING IS ZERO.

SECTION 1022.3.2 – EXTERIOR EXIT DOORS MUST LEAD DIRECTLY TO THE EXIT DISCHARGE OR THE PUBLIC WAY.

ROOF ASSEMBLIES:
SECTION 1503 – DESIGN AND INSTALLATION OF THE ROOF DRAINAGE SYSTEMS SHALL COMPLY WITH THE INTERNATIONAL PLUMBING CODE.

SECTION 1505 – MINIMUM ROOF COVERING CLASSIFICATION: TYPE IIB– CLASS C ROOF COVERING (TABLE 1505.1).

GLASS AND GLAZING:
SECTION 2406 – SAFETY GLAZING IS REQUIRED AT ALL HAZARDOUS LOCATIONS.

PROJECT DIRECTORY

SHEET NO.	DESCRIPTION
A-0.0	GENERAL INFORMATION
CIVIL	
C0.00	COVER SHEET
C0.01	SITE PLAN
C0.02	PLAT
C0.03	GENERAL CONSTRUCTION NOTES
C1.00	DEMOLITION PLAN
C2.00	DIMENSIONAL CONTROL PLAN
C2.01	SITE PLAN DETAILS
C3.00	GRADING PLAN
C3.01	EROSION CONTROL PLAN
C3.02	EROSION CONTROL DETAILS
C4.00	DRAINAGE AREA MAP
C5.00	DRAINAGE AND UTILITY PLAN
C5.01	UTILITY DETAILS
C6.00	PAVING PLAN
C6.01	PAVING PLAN DETAILS
LANDSCAPE ARCHITECTURAL	
L1.00	LANDSCAPE PLAN
L1.01	LANDSCAPE NOTES AND SPECIFICATIONS
L1.02	LANDSCAPE DETAILS
IR01	IRRIGATION PLAN
IR02	IRRIGATION DETAILS
ARCHITECTURAL	
A-1.0	SITE PLAN
A-2.0	FLOOR PLAN
A-2.1	PLAN DETAILS
A-2.2	PLAN DETAILS
A-2.3	WINDOW AND DOOR TYPES
A-2.4	TRASH ENCLOSURE DETAILS
A-2.5	TRASH ENCLOSURE DETAILS 5
A-3.0	REFLECTED CEILING PLAN
A-4.0	ROOF PLAN
A-5.0	ELEVATIONS – NORTH AND SOUTH
A-5.1	ELEVATIONS – EAST AND WEST
A-5.2	BUILDING SECTION 5
A-6.0	WALL SECTIONS
A-6.1	WALL SECTIONS
A-6.2	WALL SECTIONS 2
A-6.3	WALL SECTIONS
A-7.0	DETAILS
A-7.1	DETAILS
A-7.2	DETAILS
A-7.3	DETAILS
A-7.4	DETAILS
A-7.5	DETAILS
STRUCTURAL	
S-1.1	GENERAL NOTES
S-1.2	GENERAL NOTES
S-1.3	SCHEDULE OF SPECIAL INSPECTIONS
S-2.1	FOUNDATION FRAMING PLAN
S-2.2	ROOF FRAMING PLAN
S-3.1	TYPICAL CONCRETE SECTIONS AND DETAILS
S-3.2	CONCRETE SECTIONS AND DETAILS
S-3.3	CONCRETE SECTIONS AND DETAILS
S-4.1	STEEL BASEPLATE SCHEDULE AND SECTIONS
S-4.2	TYPICAL STEEL SECTIONS AND DETAIS
S-4.3	STEEL SECTIONS AND DETAILS
S-4.4	STEEL SECTIONS AND DETAILS
S-4.5	STEEL SECTIONS AND DETAILS
ELECTRICAL / MECHANICAL / PLUMBING	
E1.1	ELECTRICAL COVER SHEET
E2.1	ELECTRICAL FLOOR PLAN/FIXTURE SCHEDULE
E2.2	PHOTOMETRIC PLAN
E3.1	ELECTRICAL DETAILS
E4.1	ELECTRICAL RISER/PANEL SCHEDULE
M1.1	MECHANICAL COVER SHEET
M2.1	MECHANICAL FLOOR PLAN
MEP1.1	MEP SITE PLAN
P1.1	PLUMBING COVER SHEET
P2.1	PLUMBING FLOOR PLAN/PLUMBING RISER
P3.1	PLUMBING DETAILS/FIXTURE SCHEDULE
P4.1	PLUMBING GREASE INTERCEPTOR DETAILS 2
P5.1	PLUMBING RISER DIAGRAMS

18 SHEET INDEX

24 AREA MAP

REVISIONS

2	7-1-20
TENANT REVISIONS	
5	9-20-20

SHELL ONLY
THE SHOPS AT LUCAS
LUCAS, TEXAS 75002
2650 WEST LUCAS ROAD

DONALD F. SOPRANZI, AIA, LEED-AP ARCHITECT
10300 N Central Expressway
Suite 450 Dallas, Texas 75231
Telephone: 817-903-6663
dons@dfsarchitect.com

REGISTERED ARCHITECT 8069 STATE OF TEXAS

Signature 6-1-20
Sealed 6-1-20
Date
Scale
Drawn DS, RA
Job 2020-006

A - 0.0

GENERAL NOTES:

1. REFER TO CIVIL ENGINEERING DRAWINGS FOR SITE EASEMENT, DIMENSIONAL CONTROL, GRADING, DRAINAGE, UTILITY, AND EROSION CONTROL INFORMATION.
2. REFER TO LANDSCAPE ARCHITECTURAL DRAWINGS FOR PLANTING AND IRRIGATION INFORMATION.
3. ALL ACCESSIBLE PATHS NOT TO EXCEED 5% RUNNING SLOPE AND 2% CROSS SLOPE.
4. ALL ACCESSIBLE PARKING SPACES AND AISLES NOT TO EXCEED 2% SLOPE IN ANY DIRECTION.

KEYED NOTES:

1. 15 FOOT LANDSCAPE BUFFER.
2. CONCRETE WALKS AND PLAZA AREAS--PROVIDE CONTROL JOINTS WITH ALIGNMENTS WITH BUILDING OFFSETS AND JOINTING OR AS INDICATED. PROVIDE EXPANSION JOINTS EVERY 25'-0" OR 625 SF OF WALK OR PLAZA AREAS. REFER TO CIVIL ENGINEERING DRAWINGS.
3. MONUMENT SIGN BY OTHERS--SHOWN FOR REFERENCE ONLY.
4. 4" WIDE WHITE REFLECTIVE PAINT STRIPING TO DESIGNATE STANDARD PARKING SPACES.
5. INTERNATIONAL SYMBOL OF ACCESSIBILITY.
6. TRASH ENCLOSURE.
7. ACCESSIBLE CURB RAMPS WITH FLARED SIDES OR CURB RETURNS. MAXIMUM RUNNING SLOPE IS 1:12 AND MAXIMUM CROSS SLOPE IS 1:48. REFER TO CIVIL ENGINEERING DRAWINGS.
8. INTEGRAL CONCRETE CURB--REFER TO CIVIL ENGINEERING DRAWINGS.
9. AWNINGS OR CANOPIES ABOVE.
10. POLE-MOUNTED ACCESSIBLE PARKING SIGNAGE--REFER TO 24/A-1.0.
11. 4" WIDE WHITE REFLECTIVE PAINT DIAGONAL STRIPING TO DESIGNATE ACCESSIBLE PARKING AISLES OR NO PARKING AREAS.
12. POLE-MOUNTED SITE LIGHTING--REFER TO ELECTRICAL ENGINEERING DRAWINGS.
13. PRE-CAST CONCRETE WHEEL STOP.
14. PLANTING AREA--REFER TO LANDSCAPE ARCHITECTURAL DRAWINGS.
15. 50 FOOT FRONT YARD SETBACK.
16. EXISTING 8 FOOT WIDE SIDEWALK.
17. PERMEABLE PAVERS--REFER TO CIVIL ENGINEERING DRAWINGS.
18. ELECTRICAL TRANSFORMER--REFER TO ELECTRICAL ENGINEERING DRAWINGS.
19. 25 FOOT REAR YARD SETBACK.
20. 20 FOOT SIDE YARD SETBACK.
21. EXISTING ACCESSIBLE CURB RAMP.
22. 5 FOOT LANDSCAPE BUFFER.
23. DRIVE-THRU MARKETING BOARD BY OTHERS--SHOWN FOR REFERENCE ONLY.
24. DRIVE-THRU LOOP DETECTOR BY OTHERS--SHOWN FOR REFERENCE ONLY.
25. DRIVE-THRU CLEARANCE BAR BY OTHERS--SHOWN FOR REFERENCE ONLY.
26. GREASE INTERCEPTOR--REFER TO PLUMBING ENGINEERING DRAWINGS.
27. PAINTED CONCRETE-FILLED STEEL BOLLARD--REFER TO 15/A-2.4.
28. WALL MOUNTED LIGHTING--REFER TO ELECTRICAL ENGINEERING DRAWINGS.
29. DOWNSPOUT TRENCH COVER PLATES--REFER TO 11/A-6.3.
30. PAVEMENT MARKINGS.

SITE DATA:

TOTAL SITE AREA 62,106 SF (1.42 ACRE)
IMPERVIOUS COVER @ 65% MAXIMUM ALLOWED = 40,369 SF
PERVIOUS COVER @ 35% MINIMUM ALLOWED = 21,737 SF

LANDSCAPE AREA = 14,224 SF
PERMEABLE PAVER AREA = 7,610 SF
TOTAL PERVIOUS COVER = 21,834 SF > 21,737 SF

LANDSCAPE AREA @ 15% MINIMUM ALLOWED = 9,316 SF
LANDSCAPE AREA PROVIDED = 14,224 SF > 9,316 SF

INTERIOR PARKING LOT AREA = 27,005 SF SF
INTERIOR PARKING LOT LANDSCAPING AREA @ 5% MINIMUM ALLOWED = 1,350 SF
INTERIOR PARKING LOT LANDSCAPING AREA PROVIDED = 2,656 SF > 1,350 SF SF

PARKING DATA:

RESTAURANT 4,175 SF x 50% = 2,087 SF DINING AREA
2,087 SF @ 15 SF PER OCCUPANT = 139 OCCUPANTS
139 OCCUPANTS @ 1:3 = 46 SPACES REQUIRED
RETAIL 5,091 SF @ 1:200 = 26 SPACES REQUIRED
OFFICE 2,118 SF @ 1:300 = 8 SPACES REQUIRED

TOTAL PARKING REQUIRED = 80 SPACES
TOTAL PARKING PROVIDED = 81 SPACES

BUILDING DATA:

LEASABLE AREA = 11, 382 SF
RISER ROOM = 68 SF
TOTAL BUILDING AREA = 11, 450 SF

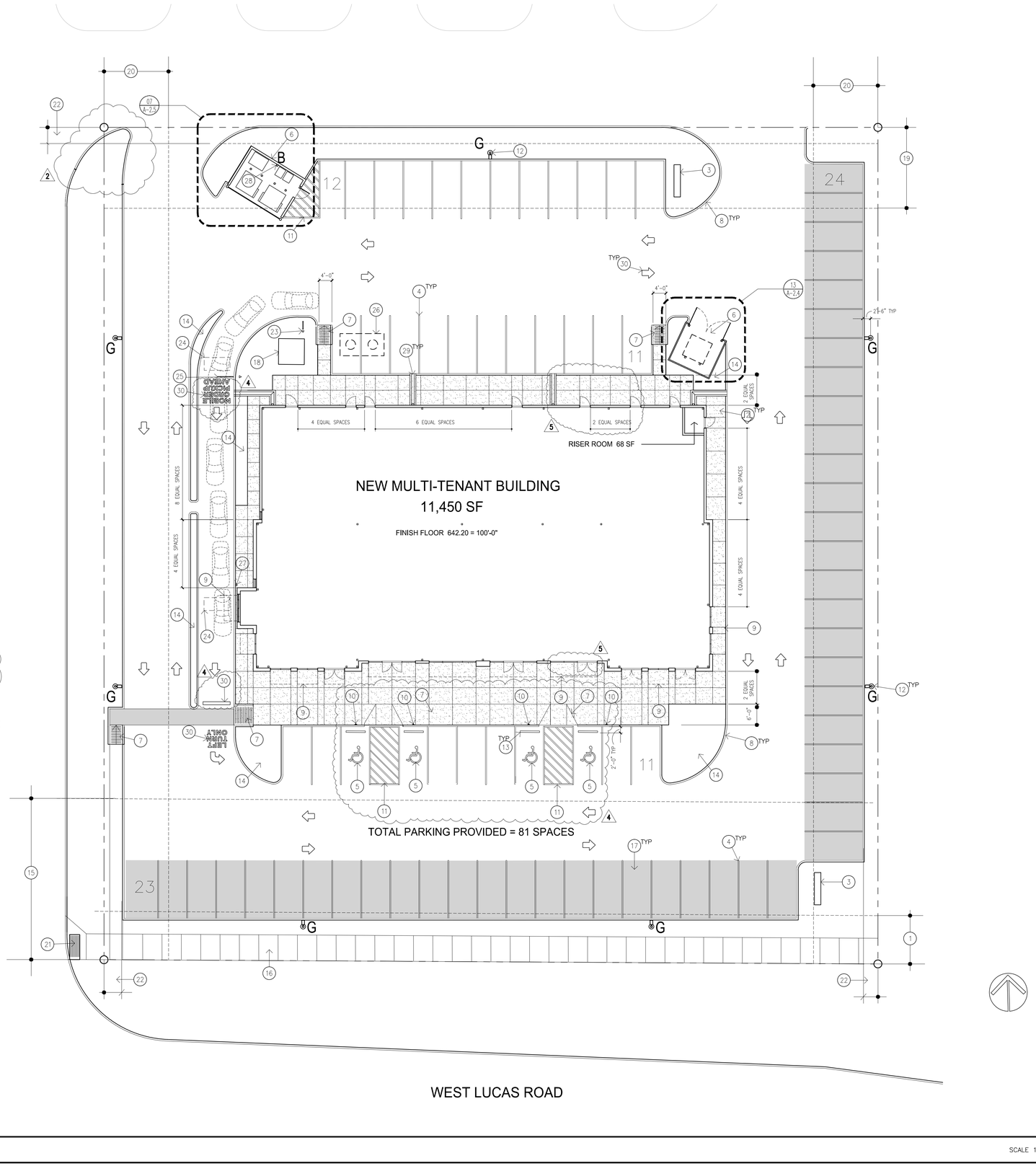

19 SITE PLAN SCALE 1/16" = 1'-0"

KEYED NOTES:

1. WHITE BAKED ENAMEL FACE WITH BLUE SCREEN PRINTED TEXT, BORDERS, AND SYMBOL BACKGROUND.
2. PROVIDE "VAN ACCESSIBLE" PLAQUE AT VAN ACCESSIBLE SPACES ONLY.

12 DETAIL SCALE 3" = 1'-0"

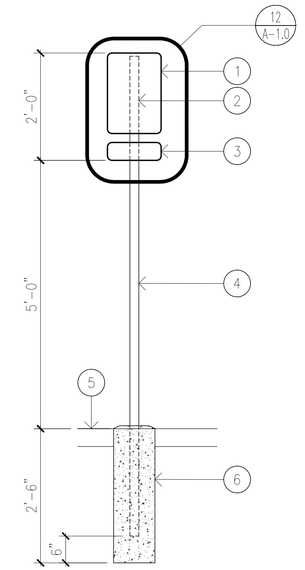

KEYED NOTES:

1. 18 GAUGE BONDERIZED STEEL "RESERVED PARKING" PLAQUE.
2. ATTACH SIGN TO POST WITH GALVANIZED STOVE BOLTS AND DEFORM THREADS AFTER INSTALLATION.
3. 18 GAUGE BONDERIZED STEEL "VAN ACCESSIBLE" PLAQUE.
4. 2" SQUARE GALVANIZED STEEL POST--EMBED IN CONCRETE FOOTING.
5. EXISTING OR NEW CONCRETE WALK.
6. 10" DIAMETER CONCRETE FOOTING.

24 DETAIL SCALE 3/4" = 1'-0"

REVISIONS

2 7-1-20

TENANT REVISIONS

4 8-6-20

5 9-20-20

SHELL ONLY

THE SHOPS AT LUCAS

LUCAS, TEXAS 75002

2650 WEST LUCAS ROAD

10300 N Central Expressway
Suite 450 Dallas, Texas 75231
Telephone: 817-903-6663
dons@dfsarchitect.com

DONALD F. SOPRANZI AIA, LEED AP ARCHITECT

8068

Signature 6-1-20
Sealed 6-1-20

Date
Scale
Drawn DS, RA
Job 2020-006

A - 1.0

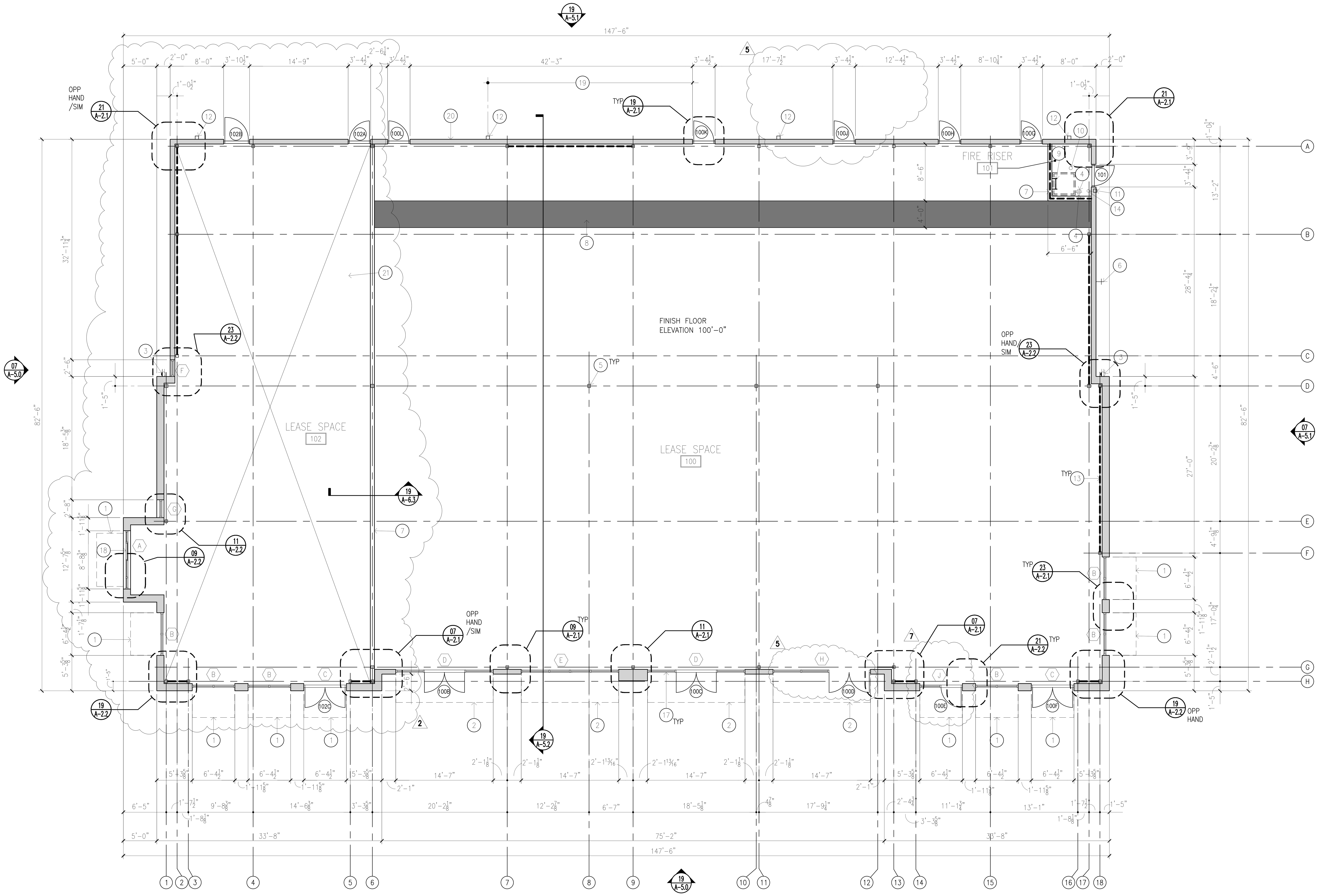

NORTH

GENERAL NOTES:
1. OVERALL STOREFRONT AND HOLLOW METAL DOOR WIDTHS ARE ROUGH OPENINGS WITH A SHIM ALLOWANCE AT HEAD, JAMBS, AND SILL.

KEYED NOTES:

1. PRE-ENGINEERED ALUMINUM CANOPY ABOVE.
2. FABRIC AWNING ABOVE.
3. RECESSED WATERPROOF DUPLEX RECEPTACLE (MOUNT AT 1'-6" AFF TO CENTERLINE OF J-BOX)--REFER TO ELECTRICAL ENGINEERING DRAWINGS.
4. QUADRUPLEX RECEPTACLE--REFER TO ELECTRICAL ENGINEERING DRAWINGS..
5. STEEL COLUMNS--REFER TO STRUCTURAL ENGINEERING DRAWINGS.
6. WALL HYDRANT (MOUNT AT 1'-6" AFF TO CENTERLINE OF PIPE)--REFER TO PLUMBING ENGINEERING DRAWINGS.
7. ONE HOUR RATED PARTITION ASSEMBLY--INDICATED BY HEAVY DASHED LINE.
8. PLUMBING LEAVE-OUT IN SLAB (INDICATED BY SHADING)--REFER TO STRUCTURAL ENGINEERING DRAWINGS AND PLUMBING ENGINEERING DRAWINGS.
9. ROOF ACCESS LADDER WITH HATCH ABOVE.
10. FLOOR DRAIN--REFER TO PLUMBING ENGINEERING DRAWINGS.
11. RECESSED FIRE DEPARTMENT KEY BOX--MOUNT AT 5'-0" AFF TO CENTERLINE OF BOX.
12. 6" X 6" MANUFACTURED METAL DOWNSPOUT.
13. WIND BRACING--REFER TO STRUCTURAL ENGINEERING DRAWINGS.
14. FIRE EXTINGUISHER AND BRACKET--MOUNT 5'-0" AFF TO CENTERLINE OF BRACKET.
15. GAS MANIFOLD LOCATION--PAINT MANIFOLD AND ALL ASSOCIATED PIPING PNT-1. REFER TO PLUMBING ENGINEERING DRAWINGS.
16. ELECTRICAL AND TELEPHONE EQUIPMENT LOCATION--PAINT CABINETS, RACEWAYS, METER BASES AND ALL ASSOCIATED CONDUIT PNT-1. REFER TO ELECTRICAL ENGINEERING DRAWINGS.
17. ALUMINUM STOREFRONT AND ENTRANCE SYSTEM WITH 1" INSULATING GLASS ASSEMBLIES.
18. ALUMINUM DRIVE-UP WINDOW AND SHELF ASSEMBLY.
19. ELECTRICAL SERVICE EQUIPMENT AREA--REFER TO ELECTRICAL ENGINEERING DRAWINGS.
20. GAS MANIFOLD LOCATION--REFER TO 19/A-5.1 AND PLUMBING ENGINEERING DRAWINGS.
21. NO SLAB-ON-GRADE IN THIS AREA. (2)

19 FLOOR PLAN

SCALE 1/8" = 1'-0"

REVISIONS

2	7-1-20
TENANT REVISIONS	
5	9-20-20
7	10-22-20

SHELL ONLY
THE SHOPS AT LUCAS
2650 WEST LUCAS ROAD
LUCAS, TEXAS 75002

DONALD F. SOPRANZI AIA, LEED-AP ARCHITECT
10300 N Central Expressway
Suite 450 Dallas, Texas 75231
Telephone: 817-903-6663
dons@dfsarchitect.com

REGISTERED ARCHITECT DONALD F. SOPRANZI 8069 STATE OF TEXAS

Signature 6-1-20
Sealed 6-1-20
Date
Scale AS SHOWN
Drawn DS, RA
Job 2020-006

A - 2.0

GENERAL NOTES:

1. ONE HOUR RATED PARTITION ASSEMBLY AT OPPOSITE HAND/SIMILAR CONDITION.
2. ⅝" TYPE X GYPSUM BOARD ON INTERIOR FACE OF METAL STUDS AT LEASE 102 ONLY.
3. FIXED GLASS SIDELIGHT IN LIEU OF ENTRY DOOR AT OPPOSITE HAND/SIMILAR CONDITION.

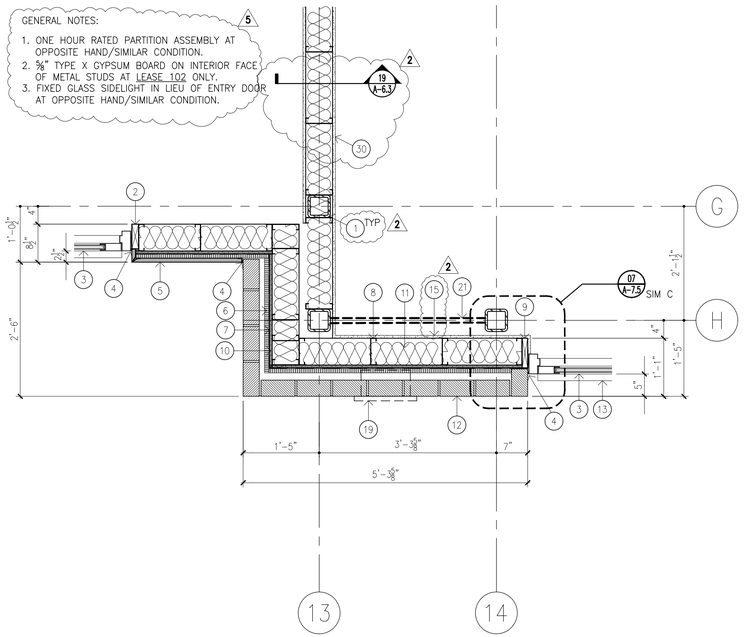

07 PLAN DETAIL SCALE : 3/4"=1'-0"

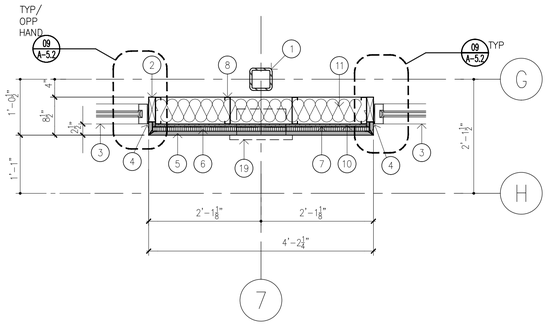

09 PLAN DETAIL SCALE : 3/4"=1'-0"

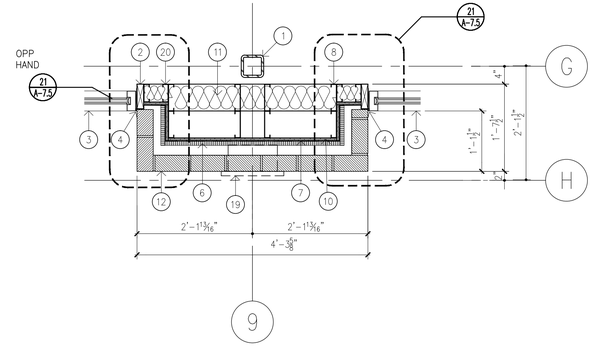

11 PLAN DETAIL SCALE : 3/4"=1'-0"

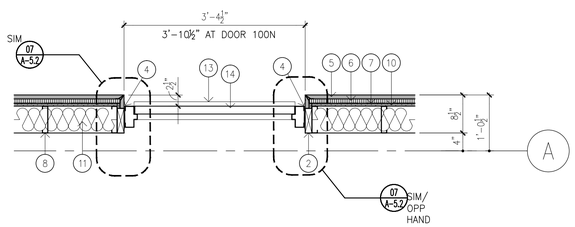

19 PLAN DETAIL SCALE : 3/4"=1'-0"

GENERAL NOTES:

1. NO DOOR OPENING AT SIMILAR CONDITION.

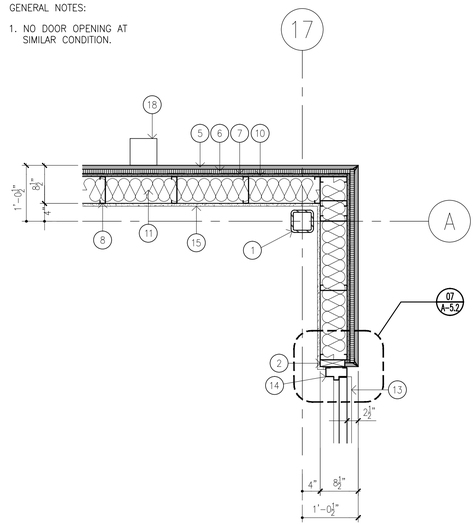

21 PLAN DETAIL SCALE : 3/4"=1'-0"

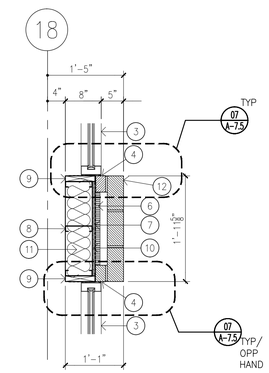

23 PLAN DETAIL SCALE : 3/4"=1'-0"

KEYED NOTES:

1. STEEL COLUMN--REFER TO STRUCTURAL ENGINEERING DRAWINGS.
2. 2 X 6 WOOD BLOCKING.
3. ALUMINUM STOREFRONT AND ENTRANCE SYSTEM WITH 1" INSULATING GLASS ASSEMBLIES.
4. BACKER ROD AND SEALANT.
5. ⅞" STUCCO VENEER.
6. R-5 RIGID INSULATION.
7. WEATHER-RESISTIVE BARRIER--WRAP AROUND WOOD BLOCKING AS INDICATED AND TERMINATE WITH SELF-ADHERED FLASHING.
8. 2 X 6 METAL STUDS (16 GAUGE) AT 16" ON CENTER MAXIMUM.
9. 2 X 8 WOOD BLOCKING CUT TO FIT.
10. ⅜" OSB SHEATHING.
11. R-19 TERMAL INSULATING BATTS.
12. MODULAR BRICK VENEER.
13. ALUMINUM THRESHOLD BELOW.
14. HOLLOW METAL DOOR AND FRAME. 2
15. ⅝" TYPE X GYPSUM BOARD--TAPE AND BED JOINTS ONLY.
16. ALUMINUM DRIVE-UP WINDOW.
17. RECESSED WATERPROOF DUPLEX RECEPTACLE--REFER TO ELECTRICAL ENGINEERING DRAWINGS.
18. 6" X 6" MANUFACTURED METAL DOWNSPOUT.
19. RECESSED LED ACCENT LIGHT FIXTURE (TYPE A)--COORDINATE METAL STUD FRAMING AS REQUIRED AND REFER TO ELECTRICAL ENGINEERING DRAWINGS.
20. 2 X 4 METAL STUDS (16 GAUGE) AT JAMB CONDITIONS AS INDICATED.
21. WIND BRACING--REFER TO STRUCTURAL ENGINEERING DRAWINGS.
22. LINE OF WOOD BLOCKING BEYOND.
23. STUCCO VENEER SILL BELOW.
24. LINE OF EXTERIOR WALL BEYOND.
25. SEAL JOINT BETWEEN DISSIMILAR MATERIALS.
26. CAST STONE SILL BELOW.
27. WEATHER-RESISTIVE BARRIER.
28. MITERED JOINT AT OUTSIDE CORNER.
29. CAST STONE COPING BELOW. 2
30. ONE HOUR RATED PARTITION ASSEMBLY.

24 PLAN DETAIL NOTES

REVISIONS	
2	7-1-20
TENANT REVISIONS	
5	9-20-20

SHELL ONLY

THE SHOPS AT LUCAS

LUCAS, TEXAS 75002

2650 WEST LUCAS ROAD

DONALD F. SOPRANZI AIA, LEED-AP ARCHITECT

10300 N Central Expressway
Suite 450 Dallas, Texas 75231
Telephone: 817-903-6663
dons@dfsarchitect.com

Signature 6-1-20

Sealed 6-1-20

Date

Scale

Drawn DS, RA

Job 2020-006

A-2.1

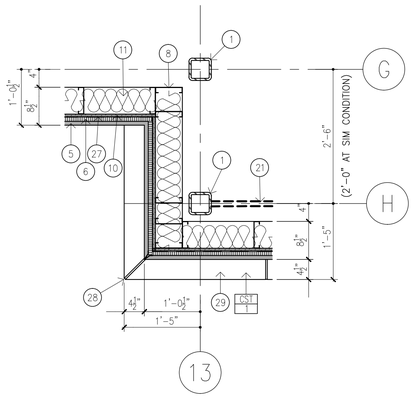

07 PLAN DETAIL SCALE : 3/4"=1'-0"

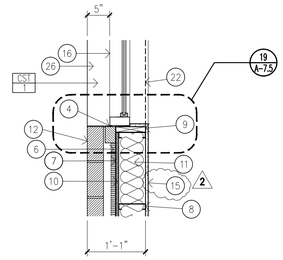

09 PLAN DETAIL SCALE : 3/4"=1'-0"

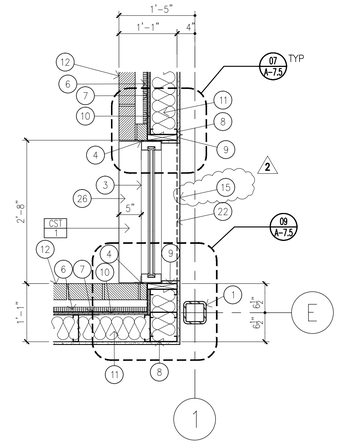

11 PLAN DETAIL SCALE : 3/4"=1'-0"

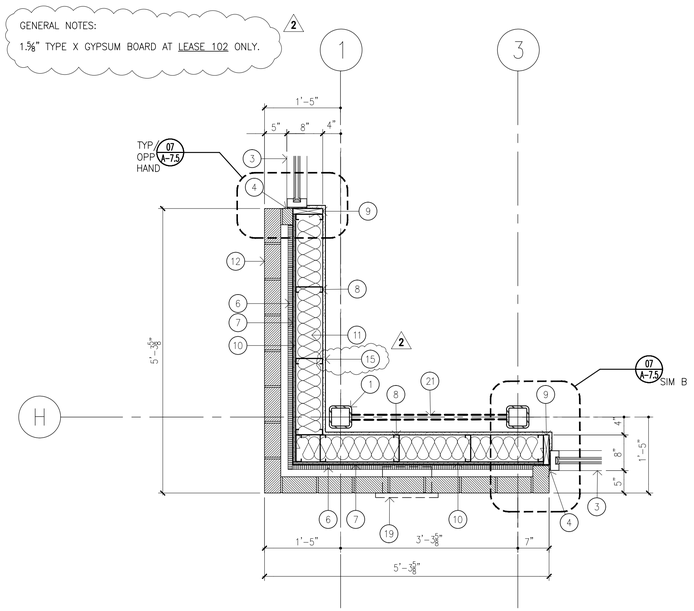

19 PLAN DETAIL SCALE : 3/4"=1'-0"

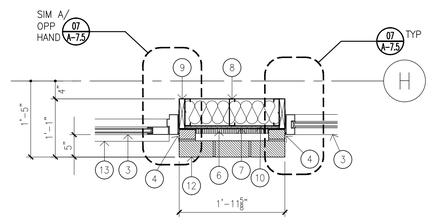

21 PLAN DETAIL SCALE : 3/4"=1'-0"

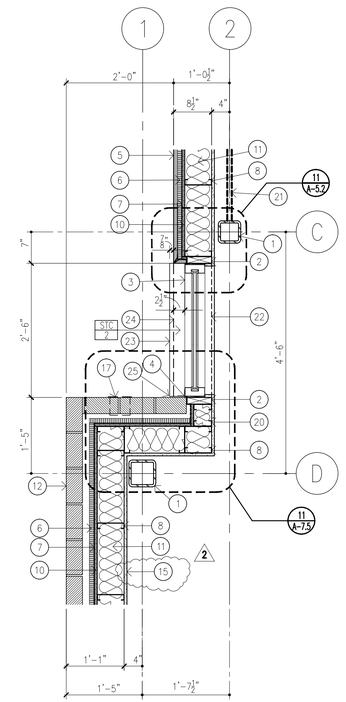

23 PLAN DETAIL SCALE : 3/4"=1'-0"

KEYED NOTES:

1. STEEL COLUMN--REFER TO STRUCTURAL ENGINEERING DRAWINGS.
2. 2 X 6 WOOD BLOCKING.
3. ALUMINUM STOREFRONT AND ENTRANCE SYSTEM WITH 1" INSULATING GLASS ASSEMBLIES.
4. BACKER ROD AND SEALANT.
5. ⅞" STUCCO VENEER.
6. R-5 RIGID INSULATION.
7. WEATHER-RESISTIVE BARRIER--WRAP AROUND WOOD BLOCKING AS INDICATED AND TERMINATE WITH SELF-ADHERED FLASHING.
8. 2 X 6 METAL STUDS (16 GAUGE) AT 16" ON CENTER MAXIMUM.
9. 2 X 8 WOOD BLOCKING CUT TO FIT.
10. ⅝" OSB SHEATHING.
11. R-19 TERMAL INSULATING BATTS.
12. MODULAR BRICK VENEER.
13. ALUMINUM THRESHOLD BELOW.
14. HOLLOW METAL DOOR AND FRAME.
15. ⅝" TYPE X GYPSUM BOARD--TAPE AND BED JOINTS ONLY.
16. ALUMINUM DRIVE-UP WINDOW.
17. RECESSED WATERPROOF DUPLEX RECEPTACLE--REFER TO ELECTRICAL ENGINEERING DRAWINGS.
18. 6" X 6" MANUFACTURED METAL DOWNSPOUT.
19. RECESSED LED ACCENT LIGHT FIXTURE (TYPE A)--COORDINATE METAL STUD FRAMING AS REQUIRED AND REFER TO ELECTRICAL ENGINEERING DRAWINGS.
20. 2 X 4 METAL STUDS (16 GAUGE) AT JAMB CONDITIONS AS INDICATED.
21. WIND BRACING--REFER TO STRUCTURAL ENGINEERING DRAWINGS.
22. LINE OF WOOD BLOCKING BEYOND.
23. STUCCO VENEER SILL BELOW.
24. LINE OF EXTERIOR WALL BEYOND.
25. SEAL JOINT BETWEEN DISSIMILAR MATERIALS.
26. CAST STONE SILL BELOW.
27. WEATHER-RESISTIVE BARRIER.
28. MITERED JOINT AT OUTSIDE CORNER.
29. CAST STONE COPING BELOW.
30. ONE HOUR RATED PARTITION ASSEMBLY.

24 PLAN DETAIL NOTES

REVISIONS

2 7-1-20

TENANT REVISIONS

SHELL ONLY

THE SHOPS AT LUCAS

LUCAS, TEXAS 75002

2650 WEST LUCAS ROAD

DONALD F. SOPRANZI AIA, LEED-AP ARCHITECT

10300 N Central Expressway
Suite 450 Dallas, Texas 75231
Telephone: 817-903-6663
dons@dfsarchitect.com

Signature 6-1-20

Sealed 6-1-20

Date

Scale

Drawn DS, RA

Job 2020-006

A-2.2

GENERAL NOTES

1. PROVIDE TEMPERED SAFETY GLASS AT ALL HAZARDOUS LOCATIONS AS REQUIRED BY ALL APPLICABLE CODES.
2. OVERALL DIMENSIONS SHOWN ARE OUTSIDE OF FRAME TO OUTSIDE OF FRAME.
3. VERIFY ROUGH OPENING DIMENSIONS PRIOR TO FABRICATION AND ADJUST FRAME DIMENSIONS AS REQUIRED TO ACCOMMODATE PERIMETER JOINT WIDTHS.

KEYED NOTES

1. ALUMINUM STOREFRONT FRAMING.
2. 1" INSULATING GLASS ASSEMBLY.
3. ALUMINUM DRIVE UP WINDOW AND SHELF ASSEMBLY.
4. FINISH FLOOR.
5. ADDITIONAL FRAMING FOR SINGLE DOOR OPENING 100E.

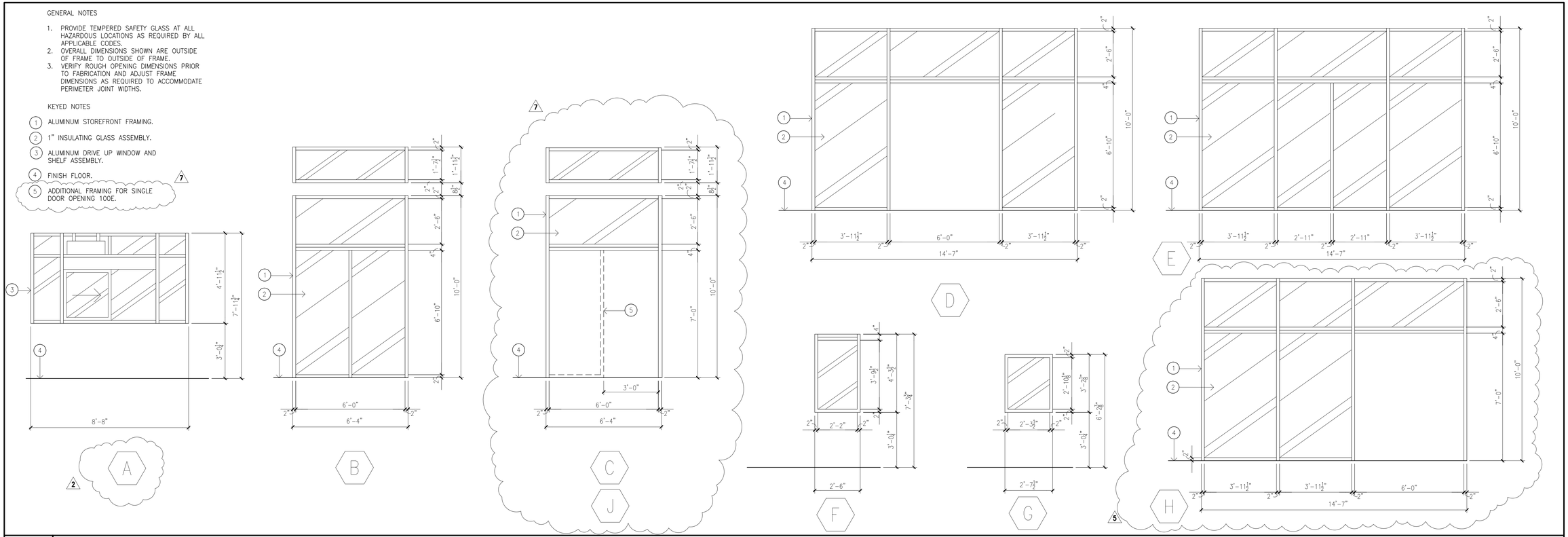

07 WINDOW TYPES

SCALE 3/8" = 1'-0"

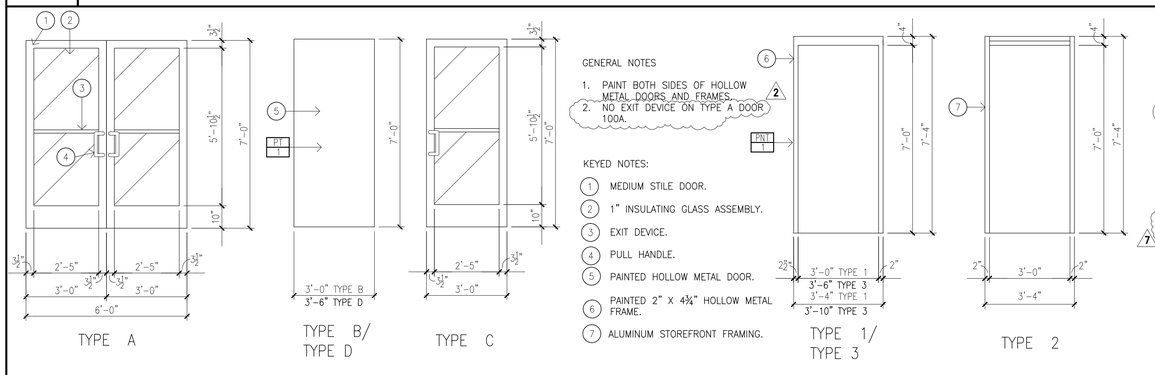

13 DOOR LEAF AND FRAME TYPES

SCALE 3/8" = 1'-0"

SET 1
PULL X 2
EXIT DEVICE X 2
CYLINDER
TOP AND BOTTOM PIVOT SET X 2
INTERMEDIATE PIVOT X 2
CLOSER WITH HOLD X 2
STOP X 2
SWEEP X 2
PERIMETER SEALS
THRESHOLD

SET 2
EXIT DEVICE
CYLINDER
CONTINUOUS HINGE
CLOSER WITH HOLD
STOP
VIEW PORT
RAIN DIVERTER
KICK PLATE
SWEEP
GASKETING
THRESHOLD

SET 3
DEADLOCK
CYLINDER
CYLINDER PULL
CLOSER WITH HOLD
CONTINUOUS HINGE
STOP
RAIN DIVERTER
SWEEP
GASKETING
THRESHOLD

SET 4
PULL
EXIT DEVICE
CYLINDER
TOP AND BOTTOM PIVOT SET
INTERMEDIATE PIVOT
CLOSER WITH HOLD
STOP
RAIN DIVERTER
SWEEP
PERIMETER SEALS
THRESHOLD

SET 5
PUSH/PULL X 2 (BY OTHERS)
DEADBOLT
CYLINDER
TOP AND BOTTOM PIVOT SET X 2
INTERMEDIATE PIVOT X 2
CLOSER WITH HOLD X 2
EXIT INDICATOR
HEADER BOLT
THRESHOLD BOLT
STOP X 2
SWEEP X 2
PERIMETER SEALS
THRESHOLD

19 HARDWARE SETS

DOOR NUMBER	DOOR LEAF TYPE	DOOR LEAF MATERIAL	DOOR LEAF WIDTH	DOOR LEAF HEIGHT	DOOR LEAF THICKNESS	DOOR LEAF FINISH	DOOR LEAF HARDWARE SET	DOOR LEAF RATING	DOOR FRAME TYPE	DOOR FRAME MATERIAL	DOOR FRAME FINISH	NOTES
100B	A	ALUM/ GLASS	6'-0"	7'-0"	1 3/4"	CLEAR ANODIZED	1	--	--	ALUM	CLEAR ANODIZED	INCLUDED WITH STOREFRONT SYSTEM.
100C	A	ALUM/ GLASS	6'-0"	7'-0"	1 3/4"	CLEAR ANODIZED	1	--	--	ALUM	CLEAR ANODIZED	INCLUDED WITH STOREFRONT SYSTEM.
100D	A	ALUM/ GLASS	6'-0"	7'-0"	1 3/4"	CLEAR ANODIZED	1	--	--	ALUM	CLEAR ANODIZED	INCLUDED WITH STOREFRONT SYSTEM.
100E	A	ALUM/ GLASS	3'-0"	7'-0"	1 3/4"	CLEAR ANODIZED	1	--	--	ALUM	CLEAR ANODIZED	INCLUDED WITH STOREFRONT SYSTEM.
100F	A	ALUM/ GLASS	6'-0"	7'-0"	1 3/4"	CLEAR ANODIZED	1	--	--	ALUM	CLEAR ANODIZED	INCLUDED WITH STOREFRONT SYSTEM.
100G	B	HOLLOW METAL	3'-0"	7'-0"	1 3/4"	PAINT	2	--	1	HOLLOW METAL	PAINT	
100H	B	HOLLOW METAL	3'-0"	7'-0"	1 3/4"	PAINT	2	--	1	HOLLOW METAL	PAINT	
100J	B	HOLLOW METAL	3'-0"	7'-0"	1 3/4"	PAINT	2	--	1	HOLLOW METAL	PAINT	
100K	B	HOLLOW METAL	3'-0"	7'-0"	1 3/4"	PAINT	2	--	1	HOLLOW METAL	PAINT	
100L	B	HOLLOW METAL	3'-0"	7'-0"	1 3/4"	PAINT	2	--	1	HOLLOW METAL	PAINT	
101	B	HOLLOW METAL	3'-0"	7'-0"	1 3/4"	PAINT	3	--	1	HOLLOW METAL	PAINT	
102A	C	ALUM/ GLASS	3'-0"	7'-0"	1 3/4"	CLEAR ANODIZED	4	--	2	ALUM	CLEAR ANODIZED	INCLUDED WITH STOREFRONT SYSTEM.
102B	D	HOLLOW METAL	3'-6"	7'-0"	1 3/4"	PAINT	2	--	3	HOLLOW METAL	PAINT	
102C	A	ALUM/ GLASS	6'-0"	7'-0"	1 3/4"	CLEAR ANODIZED	5	--	--	ALUM	CLEAR ANODIZED	INCLUDED WITH STOREFRONT SYSTEM.

22 DOOR / FRAME / HARDWARE SCHEDULE

REVISIONS

2	7-1-20
	TENANT REVISIONS
5	9-20-20
7	10-22-20

SHELL ONLY

THE SHOPS AT LUCAS

LUCAS, TEXAS 75002

2650 WEST LUCAS ROAD

DONALD F. SOPRANZI AIA, LEED-AP ARCHITECT
10300 N Central Expressway
Suite 450 Dallas, Texas 75231
Telephone: 817-903-6663
dons@dfsarchitect.com

Signature 6-1-20

Sealed 6-1-20

Date

Scale AS SHOWN

Drawn DS, RA

Job 2020-006

A-2.3

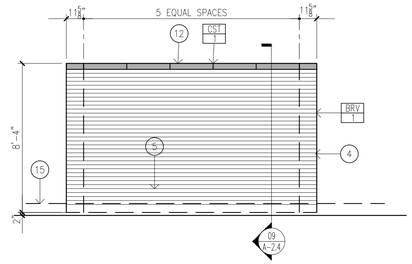

01 ELEVATION SCALE: 1/4" = 1'-0"

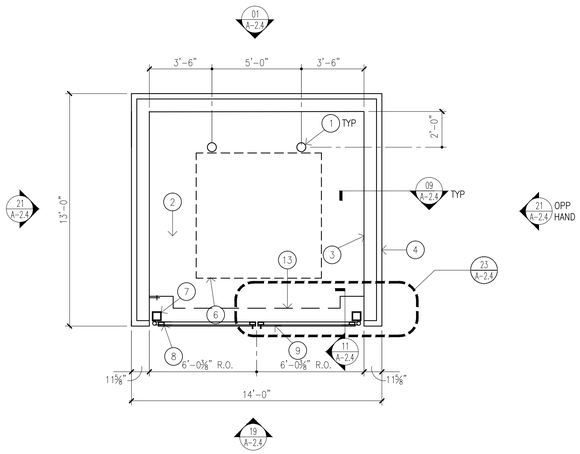

13 PLAN AT TRASH ENCLOSURE SCALE: 1/4" = 1'-0"

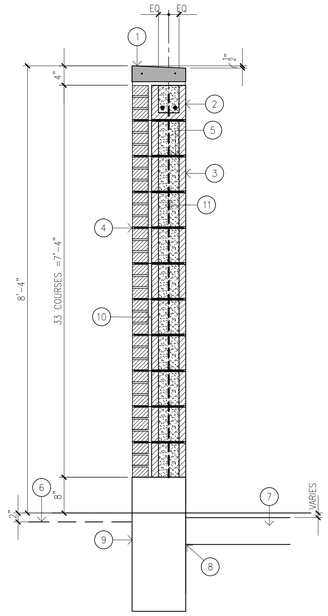

KEY NOTES:

1. CAST STONE COPING.
2. BOND BEAM WITH TWO #4 BARS CONTINUOUS AND GROUTED SOLID.
3. PAINTED 8" CMU.
4. MODULAR BRICK VENEER.
5. HEAVY-DUTY JOINT REINFORCEMENT AT 16" ON CENTER VERTICALLY.
6. FINISH GRADE AT DRIVE PAVING.
7. CONCRETE PAVING--REFER TO CIVIL ENGINEERING DRAWINGS.
8. CONSTRUCTION JOINT.
9. CONCRETE GRADE BEAM -- REFER TO STRUCTURAL ENGINEERING DRAWINGS.
10. GROUT COLLAR JOINT SOLID.
11. #5 BARS AT 24" ON CENTER VERTICALLY IN GROUTED CELLS.

09 WALL SECTION SCALE: 3/4" = 1'-0"

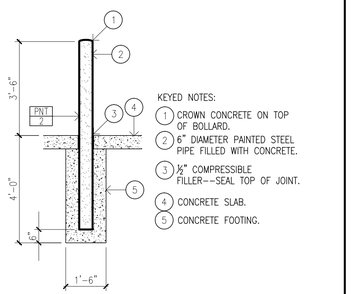

KEYED NOTES:

1. CROWN CONCRETE ON TOP OF BOLLARD.
2. 6" DIAMETER PAINTED STEEL PIPE FILLED WITH CONCRETE.
3. ½" COMPRESSIBLE FILLER--SEAL TOP OF JOINT.
4. CONCRETE SLAB.
5. CONCRETE FOOTING.

15 DETAIL SCALE: 3/4" = 1'-0"

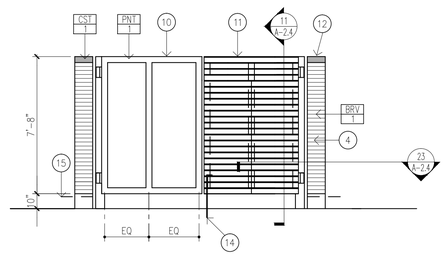

19 ELEVATION SCALE: 1/4" = 1'-0"

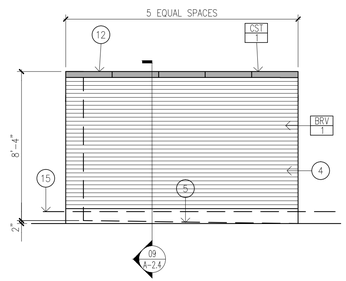

21 ELEVATION SCALE: 1/4" = 1'-0"

KEYED NOTES:

1. PAINTED CONCRETE-FILLED STEEL BOLLARD--REFER TO 15/A-2.3.
2. SLOPE CONCRETE PAVING ⅛" PER FOOT MINIMUM.
3. PAINTED 8" CMU.
4. MODULAR BRICK VENEER WITH RUNNING BOND PATTERN.
5. LINE OF PAVING INSIDE ENCLOSURE.
6. TRASH CONTAINERS BY OTHERS--SHOWN FOR REFERENCE ONLY.
7. PAINTED CONCRETE-FILLED STEEL POST--CAST WITH CONCRETE PILASTER.
8. PAINTED HEAVY-DUTY BARREL HINGE.
9. PAINTED STEEL GATE FRAME.
10. 2" X 4" PAINTED STEEL GATE FRAME WITH SLATS OMITTED FOR CLARITY.
11. 3-1/2" X ¼" PAINTED STEEL SLATS.
12. CAST STONE COPING.
13. CONCRETE GRADE BEAM BELOW -- REFER TO STRUCTURAL ENGINEERING DRAWINGS.
14. PAINTED STEEL CANE BOLT.
15. LINE OF CONCRETE CURB BEYOND.

22 PLAN AND ELEVATION NOTES

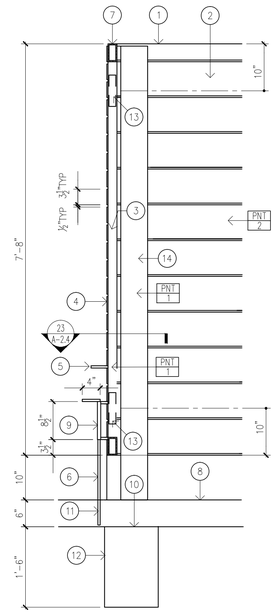

KEY NOTES:

1. CAST STONE COPING BEYOND.
2. PAINTED CMU BEYOND.
3. PAINTED STEEL VERTICAL GATE FRAME MEMBER BEYOND.
4. 3-1/2" X ¼" PAINTED STEEL SLATS.
5. ⅜" DIAMETER X 4" LONG STEEL CANE BOLT REST--ATTACH TO GATE FRAME IN ½" OPENING BETWEEN STEEL SLATS.
6. ¾" DIAMETER PAINTED STEEL CANE BOLT.
7. 2" X 4" X ¼" PAINTED STEEL TUBE GATE FRAME.
8. CONCRETE PAVING--REFER TO CIVIL ENGINEERING DRAWINGS.
9. 1" DIAMETER PAINTED STEEL SLEEVE--ATTACH TO GATE FRAME WITH ⅜"PAINTED STEEL BARS IN ½" OPENING BETWEEN STEEL SLATS.
10. CONSTRUCTION JOINT.
11. RECESSED STEEL STRIKE TO RECEIVE CANE BOLT AT OPEN AND CLOSED GATE LEAF POSITIONS.
12. CONCRETE GRADE BEAM--REFER TO STRUCTURAL ENGINEERING DRAWINGS.
13. HEAVY-DUTY BARREL HINGE BEYOND.
14. PAINTED STEEL TUBE WITH STEEL TOP PLATE BEYOND.

11 GATE SECTION SCALE: 3/4" = 1'-0"

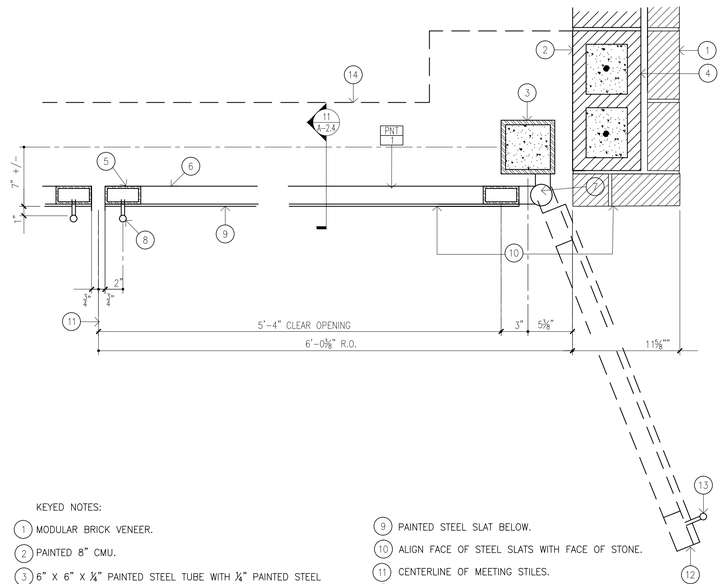

KEYED NOTES:

1. MODULAR BRICK VENEER.
2. PAINTED 8" CMU.
3. 6" X 6" X ¼" PAINTED STEEL TUBE WITH ¼" PAINTED STEEL TOP PLATE FILLED WITH CONCRETE. CAST WITH CONCRETE PILASTER.
4. GROUT COLLAR JOINT SOLID.
5. 2" X 4" X 3/16" PAINTED STEEL TUBE GATE FRAME--PROVIDE 3/16 FILLET WELD ALL AROUND.
6. PAINTED STEEL HORIZONTAL GATE FRAME MEMBER BELOW.
7. HEAVY-DUTY BARREL HINGE--PAINT TO MATCH GATE FRAME.
8. 1" PAINTED STEEL SLEEVE--ATTACH TO GATE FRAME WITH A PAIR OF ⅜" DIAMETER PAINTED STEEL BARS SET IN ½" OPENING BETWEEN METAL SLATS.
9. PAINTED STEEL SLAT BELOW.
10. ALIGN FACE OF STEEL SLATS WITH FACE OF STONE.
11. CENTERLINE OF MEETING STILES.
12. GATE LEAF IN 120 DEGREE FULLY OPEN POSITION.
13. PROVIDE RECESSED STRIKE TO RECEIVE CANE BOLTS AT OPEN AND CLOSED GATE LEAF POSITIONS.
14. CONCRETE GRADE BEAM BELOW.

23 DETAIL SCALE: 1 1/2" = 1'-0"

REVISIONS

SHELL ONLY

THE SHOPS AT LUCAS

LUCAS, TEXAS 75002

2650 WEST LUCAS ROAD

DONALD F. SOPRANZI AIA, LEED AP ARCHITECT
10300 N Central Expressway
Suite 450 Dallas, Texas 75231
Telephone: 817-903-6663
dons@dfsarchitect.com

Signature 6-1-20

Sealed 6-1-20

Date

Scale AS SHOWN

Drawn DS, RA

Job 2020-006

A - 2.4

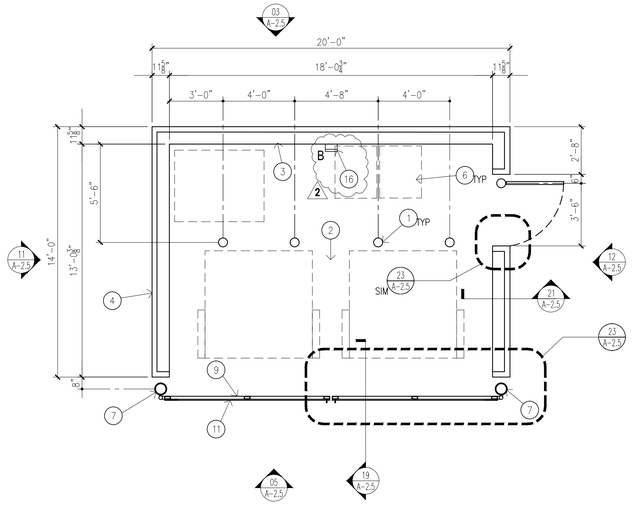

07 PLAN AT TRASH ENCLOSURE SCALE: 1/4" = 1'-0"

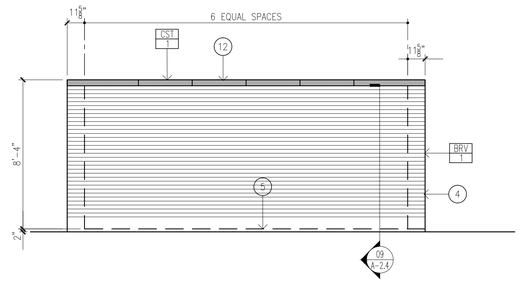

03 ELEVATION

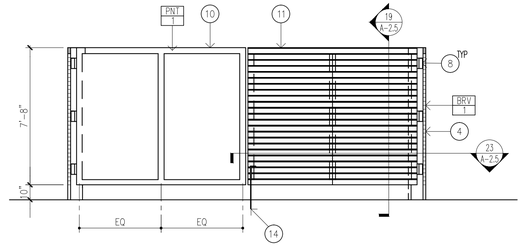

05 ELEVATION

KEYED NOTES:

1. PAINTED CONCRETE–FILLED STEEL BOLLARD––REFER TO 10/A–2.5.
2. SLOPE CONCRETE PAVING ⅛" PER FOOT MINIMUM.
3. PAINTED 8" CMU.
4. MODULAR BRICK VENEER WITH RUNNING BOND PATTERN.
5. LINE OF PAVING INSIDE ENCLOSURE.
6. TRASH CONTAINERS BY OTHERS––SHOWN FOR REFERENCE ONLY.
7. PAINTED CONCRETE–FILLED STEEL PIPE––CAST WITH CONCRETE PILASTER.
8. PAINTED HEAVY–DUTY BARREL HINGE.
9. PAINTED STEEL GATE FRAME.
10. 2" X 4" PAINTED STEEL GATE FRAME WITH SLATS OMITTED FOR CLARITY.
11. 3–1/2" X ¼" PAINTED STEEL SLATS.
12. CAST STONE COPING.
13. CONCRETE GRADE BEAM BELOW –– REFER TO STRUCTURAL ENGINEERING DRAWINGS.
14. PAINTED STEEL CANE BOLT.
15. SLIDE BOLT AND STRIKE.
16. WALL–MOUNTED LIGHT FIXTURE (TYPE B)––CENTER LEFT TO RIGHT ON WALL AND MOUNT 7'0" ABOVE PAVEMENT TO CENTERLINE OF FIXTURE. REFER TO ELECTRICAL ENGINEERING DRAWINGS.

2

09 PLAN / ELEVATION NOTES

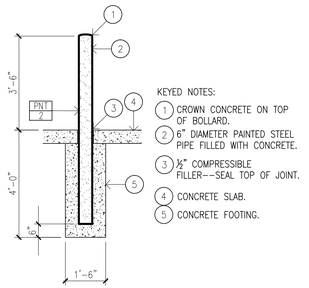

KEYED NOTES:

1. CROWN CONCRETE ON TOP OF BOLLARD.
2. 6" DIAMETER PAINTED STEEL PIPE FILLED WITH CONCRETE.
3. ½" COMPRESSIBLE FILLER––SEAL TOP OF JOINT.
4. CONCRETE SLAB.
5. CONCRETE FOOTING.

10 DETAIL SCALE: 3/4" = 1'-0"

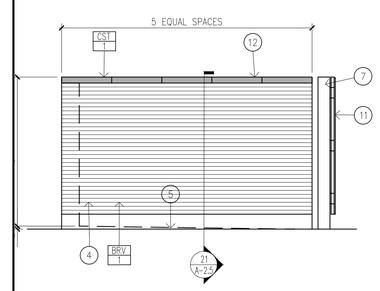

11 ELEVATION SCALE: 1/4" = 1'-0"

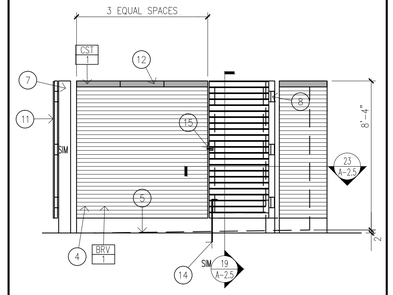

12 ELEVATION SCALE: 1/4" = 1'-0"

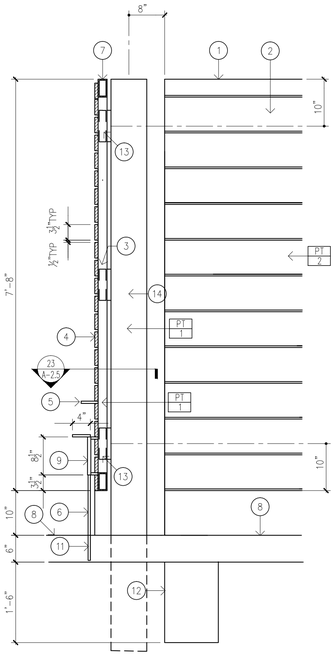

KEY NOTES:

1. CAST STONE COPING BEYOND.
2. PAINTED CMU BEYOND.
3. PAINTED STEEL VERTICAL GATE FRAME MEMBER BEYOND.
4. 3–1/2" X ¼" PAINTED STEEL SLATS.
5. ⅜" DIAMETER X 4" LONG STEEL CANE BOLT REST––ATTACH TO GATE FRAME IN ½" OPENING BETWEEN STEEL SLATS.
6. ¾" DIAMETER PAINTED STEEL CANE BOLT.
7. 2" X 4" X ¼" PAINTED STEEL TUBE GATE FRAME.
8. CONCRETE PAVING––REFER TO CIVIL ENGINEERING DRAWINGS.
9. 1" DIAMETER PAINTED STEEL SLEEVE––ATTACH TO GATE FRAME WITH ⅜"PAINTED STEEL BARS IN ½" OPENING BETWEEN STEEL SLATS.
10. CONSTRUCTION JOINT.
11. RECESSED STEEL STRIKE TO RECEIVE CANE BOLT AT OPEN AND CLOSED GATE LEAF POSITIONS.
12. CONCRETE GRADE BEAM––REFER TO STRUCTURAL ENGINEERING DRAWINGS.
13. HEAVY–DUTY BARREL HINGE BEYOND.
14. PAINTED 8" DIAMETER STEEL PIPE WITH STEEL TOP PLATE BEYOND.

19 GATE SECTION SCALE: 3/4" = 1'-0"

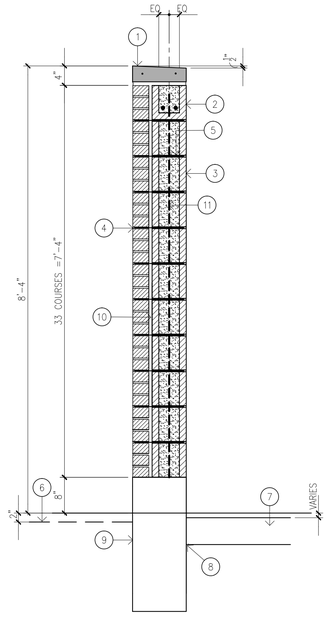

KEY NOTES:

1. CAST STONE COPING.
2. BOND BEAM WITH TWO #4 BARS CONTINUOUS AND GROUTED SOLID.
3. PAINTED 8" CMU.
4. MODULAR BRICK VENEER.
5. HEAVY–DUTY JOINT REINFORCEMENT AT 16" ON CENTER VERTICALLY.
6. FINISH GRADE AT DRIVE PAVING.
7. CONCRETE PAVING––REFER TO CIVIL ENGINEERING DRAWINGS.
8. CONSTRUCTION JOINT.
9. CONCRETE GRADE BEAM –– REFER TO STRUCTURAL ENGINEERING DRAWINGS.
10. GROUT COLLAR JOINT SOLID.
11. #5 BARS AT 24" ON CENTER VERTICALLY IN GROUTED CELLS.

21 WALL SECTION SCALE: 3/4" = 1'-0"

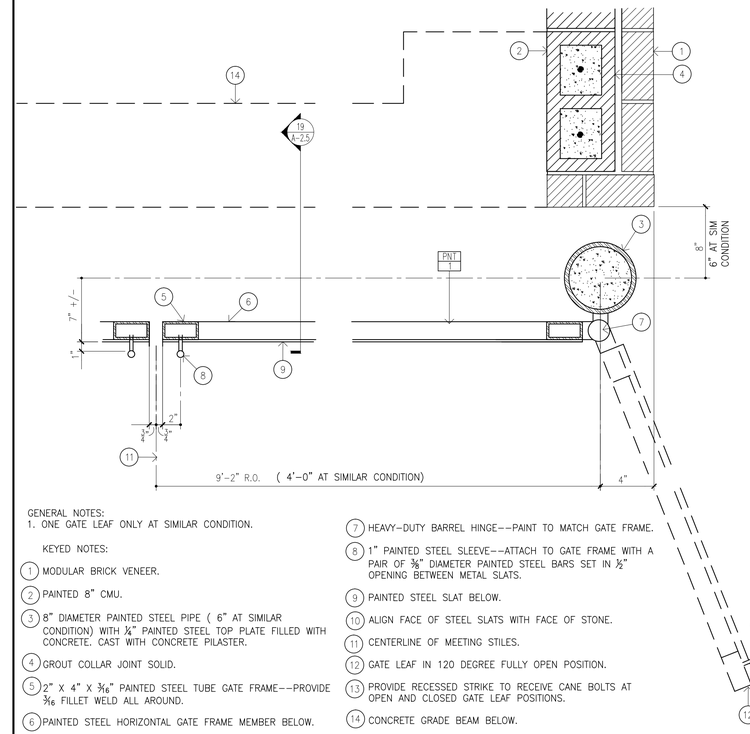

GENERAL NOTES:
1. ONE GATE LEAF ONLY AT SIMILAR CONDITION.

KEYED NOTES:

1. MODULAR BRICK VENEER.
2. PAINTED 8" CMU.
3. 8" DIAMETER PAINTED STEEL PIPE (6" AT SIMILAR CONDITION) WITH ¼" PAINTED STEEL TOP PLATE FILLED WITH CONCRETE. CAST WITH CONCRETE PILASTER.
4. GROUT COLLAR JOINT SOLID.
5. 2" X 4" X 3/16" PAINTED STEEL TUBE GATE FRAME––PROVIDE 3/16 FILLET WELD ALL AROUND.
6. PAINTED STEEL HORIZONTAL GATE FRAME MEMBER BELOW.
7. HEAVY–DUTY BARREL HINGE––PAINT TO MATCH GATE FRAME.
8. 1" PAINTED STEEL SLEEVE––ATTACH TO GATE FRAME WITH A PAIR OF ⅜" DIAMETER PAINTED STEEL BARS SET IN ½" OPENING BETWEEN METAL SLATS.
9. PAINTED STEEL SLAT BELOW.
10. ALIGN FACE OF STEEL SLATS WITH FACE OF STONE.
11. CENTERLINE OF MEETING STILES.
12. GATE LEAF IN 120 DEGREE FULLY OPEN POSITION.
13. PROVIDE RECESSED STRIKE TO RECEIVE CANE BOLTS AT OPEN AND CLOSED GATE LEAF POSITIONS.
14. CONCRETE GRADE BEAM BELOW.

23 DETAIL SCALE: 1 1/2" = 1'-0"

REVISIONS

2 7-1-20

TENANT REVISIONS

SHELL ONLY

THE SHOPS AT LUCAS

2650 WEST LUCAS ROAD LUCAS, TEXAS 75002

DONALD F. SOPRANZI AIA, LEED AP ARCHITECT

10300 N Central Expressway
Suite 450 Dallas, Texas 75231
Telephone: 817-903-6663
dons@dfsarchitect.com

Signature 6-1-20

Sealed 6-1-20

Date

Scale AS SHOWN

Drawn DS, RA

Job 2020-006

A - 2.5

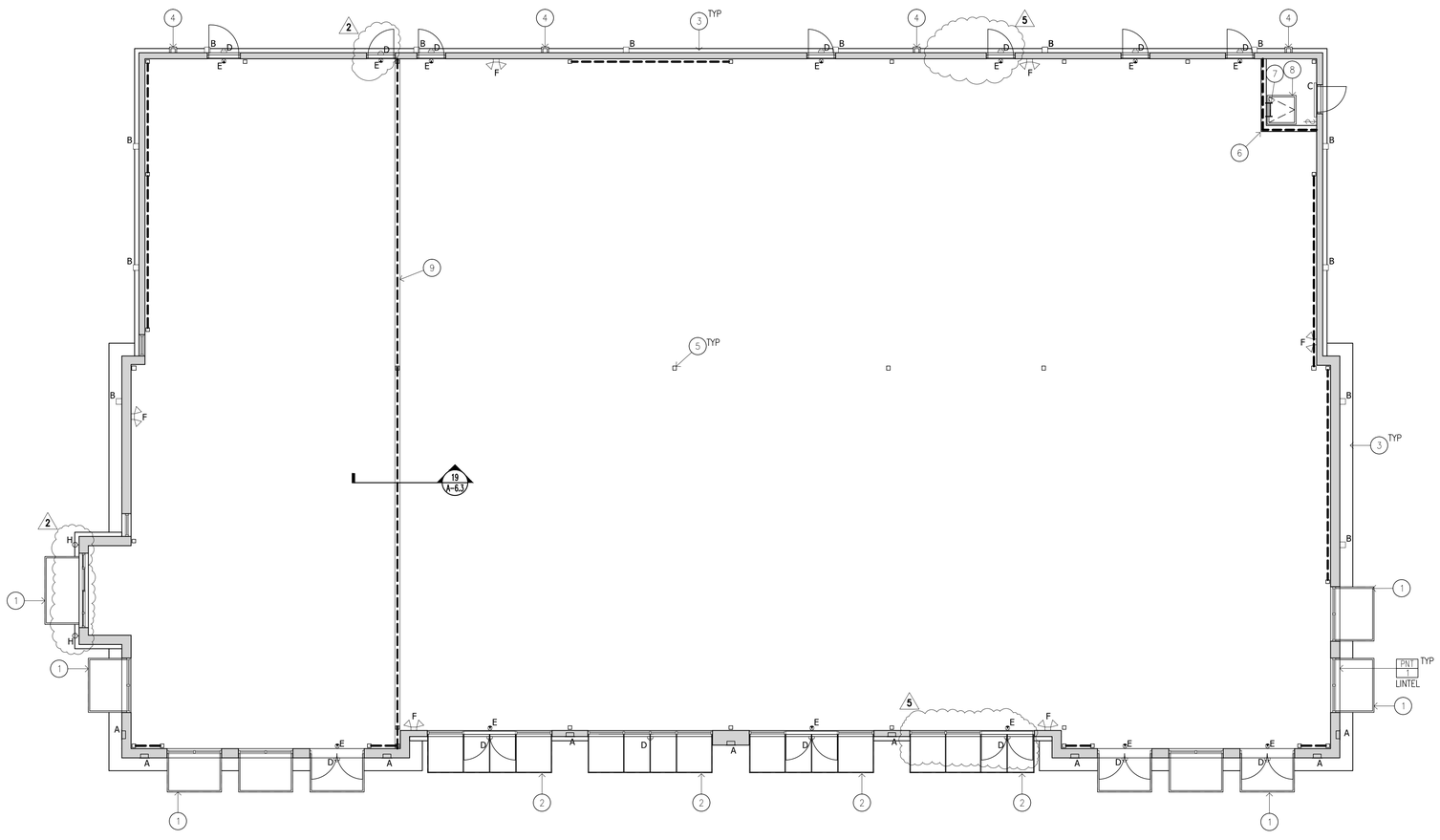

19 REFLECTED CEILING PLAN

SCALE 1/8" = 1'-0"

GENERAL NOTES:

1. ALL INTERIOR SPACES ARE OPEN TO STRUCTURAL DECK ABOVE.

KEYED NOTES:

1. PRE-ENGINEERED ALUMINUM CANOPY ABOVE.
2. FABRIC AWNING ABOVE--ALIGN SUPPORTS WITH VERTICAL STOREFRONT FRAMING AS INDICATED UNLESS NOTED OTHERWISE.
3. PROJECTING STUCCO CORNICE ABOVE.
4. MANUFACTURED METAL DOWNSPOUT AND CONDUCTOR HEAD.
5. STEEL COLUMNS--REFER TO STRUCTURAL ENGINEERING DRAWINGS.
6. ONE HOUR RATED PARTITION ASSEMBLY--INDICATED BY HEAVY DASHED LINE.
7. STEEL ROOF ACCESS LADDER.
8. ROOF HATCH ABOVE.
9. ONE HOUR RATED PARTITION ASSEMBLY--INDICATED BY HEAVY DASHED LINE.

12 CEILING PLAN NOTES

TYPE A RECESSED LED ACCENT--MOUNT 6'-1⅜" AFF TO CENTERLINE OF FIXTURE AND CENTER LEFT TO RIGHT WITHIN STUCCO OR BRICK PILASTER. REFER TO ELEVATIONS.

TYPE B WALL-MOUNTED LED LUMINAIRE--MOUNT 10'-0" AFF+/-(SET BOTTOM OF FIXTURE ON TOP OF HORIZONTAL STUCCO REVEAL AND CENTER LEFT TO RIGHT BETWEEN VERTICAL REVEALS). REFER TO ELEVATIONS.

TYPE C WALL-MOUNTED LED BRACKET--MOUNT 9'-0" AFF TO CENTERLINE OF FIXTURE AND CENTER LEFT TO RIGHT ABOVE DOOR OPENING.

TYPE D WALL-MOUNTED LED EMERGENCY EGRESS--MOUNT 10'-8" AFF TO CENTERLINE OF FIXTURE AND CENTER LEFT TO RIGHT ABOVE DOOR OPENING. MOUNT FIXTURE TO UNDERSIDE OF PRE-ENGINEERED ALUMINUM CANOPIES.

TYPE E PENDANT-MOUNTED LED EXIT--MOUNT BOTTOM OF FIXTURE 6" ABOVE TOP OF DOOR OR STOREFRONT FRAMING AND CENTER LEFT TO RIGHT ABOVE DOOR OPENING.

TYPE F WALL-MOUNTED ADJUSTABLE LED EMERGENCY--MOUNT 12'-0" AFF TO CENTERLINE OF FIXTURE WHERE INDICATED ON REFLECTED CEILING PLAN.

TYPE G POLE-MOUNTED LED LUMINAIRE--REFER TO SITE PLAN FOR LOCATIONS.

TYPE H WALL-MOUNTED LED UP/DOWN LUMINAIRE--MOUNT 6'-1⅜" AFF TO CENTERLINE OF FIXTURE AND CENTER LEFT TO RIGHT WITHIN BRICK WIDTH.

24 FIXTURE SCHEDULE

REVISIONS

2 7-1-20

TENANT REVISIONS

5 9-20-20

SHELL ONLY

THE SHOPS AT LUCAS

LUCAS, TEXAS 75002

2650 WEST LUCAS ROAD

DONALD F. SOPRANZI AIA, LEED-AP ARCHITECT

10300 N Central Expressway
Suite 450 Dallas, Texas 75231
Telephone: 817-903-6663
dons@dfsarchitect.com

REGISTERED ARCHITECT 8069 STATE OF TEXAS

Signature 6-1-20

Sealed 6-1-20

Date

Scale AS SHOWN

Drawn DS, RA

Job 2020-006

A - 3.0

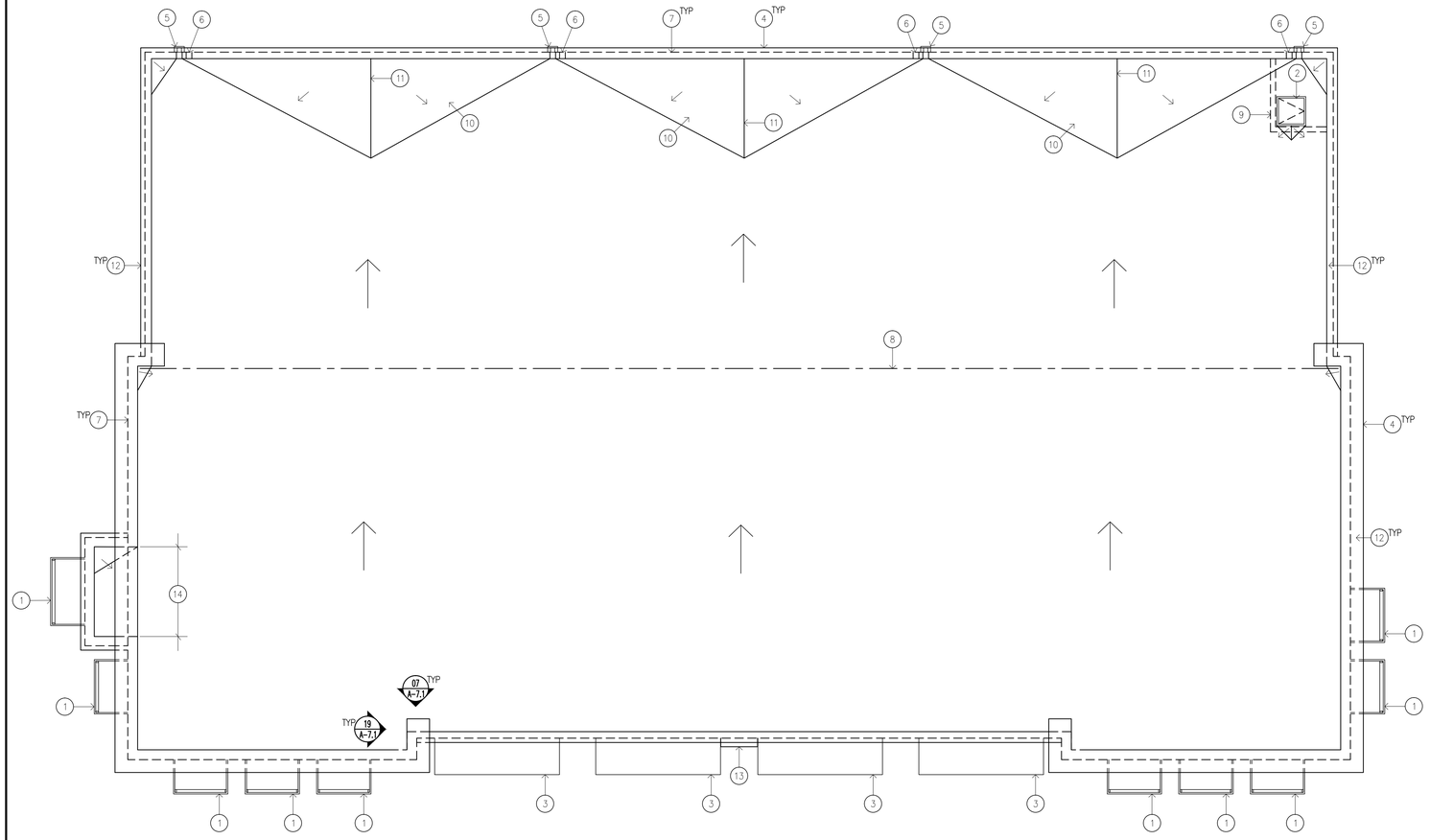

GENERAL NOTES:

1. MINIMUM TPO ROOF SLOPE IS ¼" PER FOOT (INCLUDING TAPERED INSULATION AREAS).
2. REFER TO STRUCTURAL ENGINEERING DRAWINGS FOR ROOFTOP EQUIPMENT ZONES.

KEYED NOTES:

1. PRE–ENGINEERED ALUMINUM CANOPY BELOW.
2. ROOF HATCH––COORDINATE LOCATION WITH ROOF JOIST LAYOUT.
3. FABRIC AWNING BELOW.
4. PROJECTED STUCCO CORNICE.
5. MANUFACTURED METAL DOWNSPOUT AND CONDUCTOR HEAD BELOW.
6. PRIMARY AND SECONDARY SCUPPER BELOW.
7. FACE OF WALL BELOW.
8. INTERIOR COLUMN LINE BELOW.
9. FIRE RISER ROOM BELOW.
10. PROVIDE TAPERED INSULATION CRICKETS AS REQUIRED.
11. RIDGE LINE.
12. MANUFACTURED METAL COPING.
13. CAST STONE COPING BELOW.
14. EXTENT OF OPENING IN PARAPET BELOW.

NORTH

19 ROOF PLAN SCALE 1/8" = 1'–0"

1. VERIFY HEIGHT OF ROOF MEMBRANE AT PARAPET PRIOR TO CONDUCTOR HEAD AND DOWNSPOUT FABRICATION.
2. OVERFLOW SCUPPER LOCATION VARIES––REFER TO ELEVATIONS.

1. OVERFLOW SCUPPER OPENING––SIMILAR TO PRIMARY SCUPPER.
2. PRE–FINISHED GALVANIZED METAL SCUPPER FLANGE.
3. KICK–OUT WITH SEALANT AT FLANGE PERIMETER.
4. PAINTED GALVANIZED METAL SCUPPER SLEEVE AT OPENING PERIMETER.
5. SCUPPER OPENING.
6. TPO FLASHING LAYERS WITH TPO SEALANT BEYOND.
7. MANUFACTURED METAL CONDUCTOR HEAD AND DOWNSPOUT BEYOND.
8. CENTERLINE OF SCUPPER OPENING.

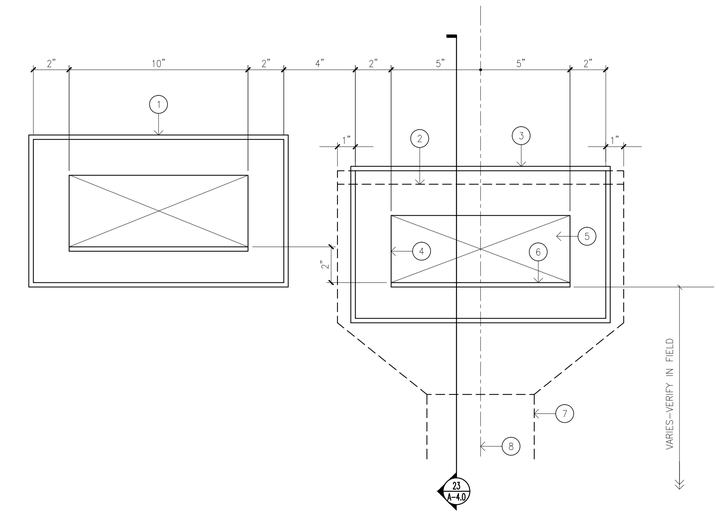

11 DETAIL SCALE 3" = 1'–0"

KEYED NOTES:

1. 2 X 6 METAL STUDS AT 16" ON CENTER MAXIMUM.
2. STEEL PERIMETER BEAM––REFER TO STRUCTURAL ENGINEERING DRAWINGS.
3. ⅝" OSB BOARD.
4. WEATHER–RESISTIVE BARRIER.
5. SEALANT AT FLANGE PERIMETER.
6. 2 X WOOD NAILERS AS REQUIRED.
7. MANUFACTURED METAL CONDUCTOR HEAD.
8. TPO FLASHING LAYERS WITH TPO EDGE SEALANT AS INDICATED.
9. PRE–FINISHED GALVANIZED METAL SCUPPER FLANGE AT OPENING PERIMETER.
10. 60 MIL TPO ROOF MEMBRANE.
11. R–30 RIGID INSULATION.
12. 6" X 6" MANUFACTURED METAL DOWNSPOUT.
13. 2 X WOOD BLOCKING (AT SCUPPER OPENING ONLY).
14. METAL ROOF DECKING––REFER TO STRUCTURAL ENGINEERING DRAWING.
15. STEEL ROOF JOISTS––REFER TO STRUCTURAL ENGINEERING DRAWINGS.
16. STUCCO VENEER.
17. R–19 THERMAL INSULATING BATTS.
18. PAINTED GALVANIZED METAL SCUPPER SLEEVE.
19. R–5 RIGID INSULATION.

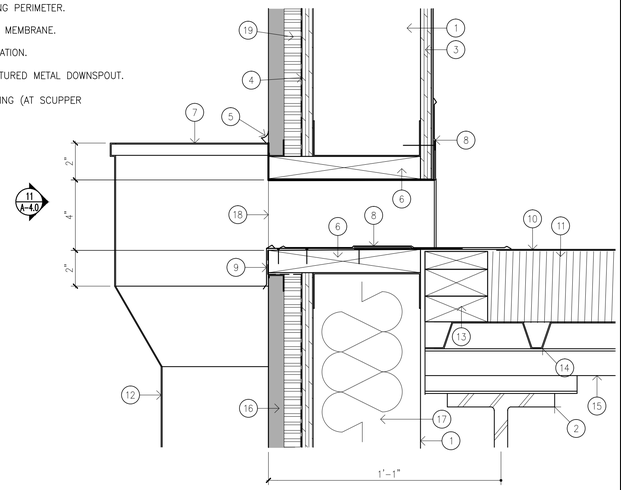

23 DETAIL SCALE 3" = 1'–0"

REVISIONS

SHELL ONLY

THE SHOPS AT LUCAS

LUCAS, TEXAS 75002

2650 WEST LUCAS ROAD

DONALD F. SOPRANZI AIA, LEED-AP ARCHITECT
10300 N Central Expressway
Suite 450 Dallas, Texas 75231
Telephone: 817-903-6663
dons@dfsarchitect.com

Signature 6–1–20
Sealed 6–1–20
Date
Scale AS SHOWN
Drawn DS, RA
Job 2020–006

A - 4.0

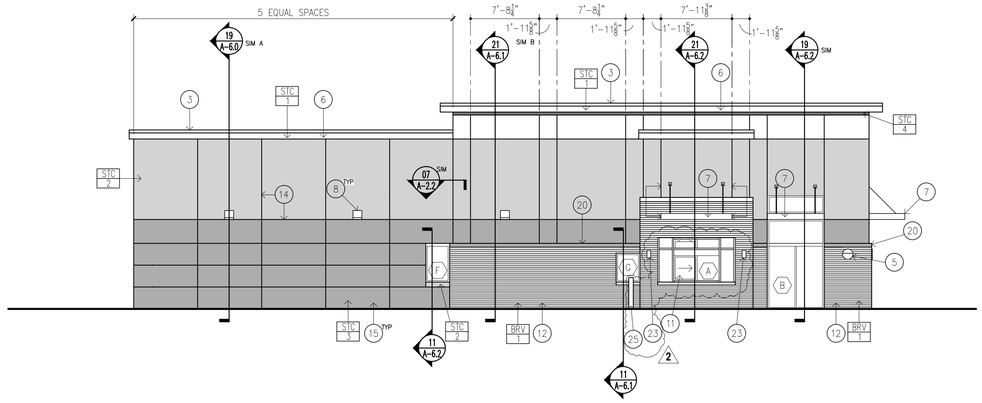

07 WEST ELEVATION SCALE 1/8" = 1'-0"

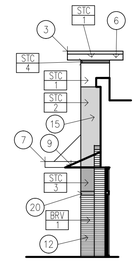

10 ELEVATION SCALE 1/8" = 1'-0"

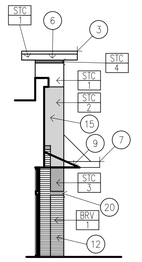

11 ELEVATION SCALE 1/8" = 1'-0"

BRICK VENEER

BRV 1
SIOUX CITY BRICK
DISTRIBUTED BY BLACKSON BRICK COMPANY
MIDTOWN IRON SPOT VELOUR
TYPE: MODULAR BRICK
MORTAR: SPECTRUM LIGHT BLACK-N
PATTERN: RUNNING BOND

CAST STONE

CST 1
DALLAS CAST STONE
DISTRIBUTED BY BLACKSON BRICK COMPANY
"NUMBER 9"

STUCCO VENEER

STC 1
MATCH SHERWIN WILLIAMS
SW 7005 PURE WHITE
TEXTURE: FINE

STC 2
MATCH SHERWIN WILLIAMS
SW 7028 INCREDIBLE WHITE
TEXTURE: FINE

STC 3
MATCH SHERWIN WILLIAMS
SW 7634 PEDIMENT
TEXTURE: FINE

STC 4
MATCH SHERWIN WILLIAMS
SW 7018 DOVETAIL
TEXTURE: FINE

AWNINGS

FAB 1
TRI VANTAGE SUNBRELLA
4861 SILICA STONE
ITEM # 874861

FERROUS METAL

PNT 1
SHERWIN WILLIAMS
SW 7634 PEDIMENT
FINISH: SEMI-GLOSS

PNT 2
SHERWIN WILLIAMS
SW 7018 DOVETAIL
FINISH: SEMI-GLOSS

12 MATERIAL LEGEND

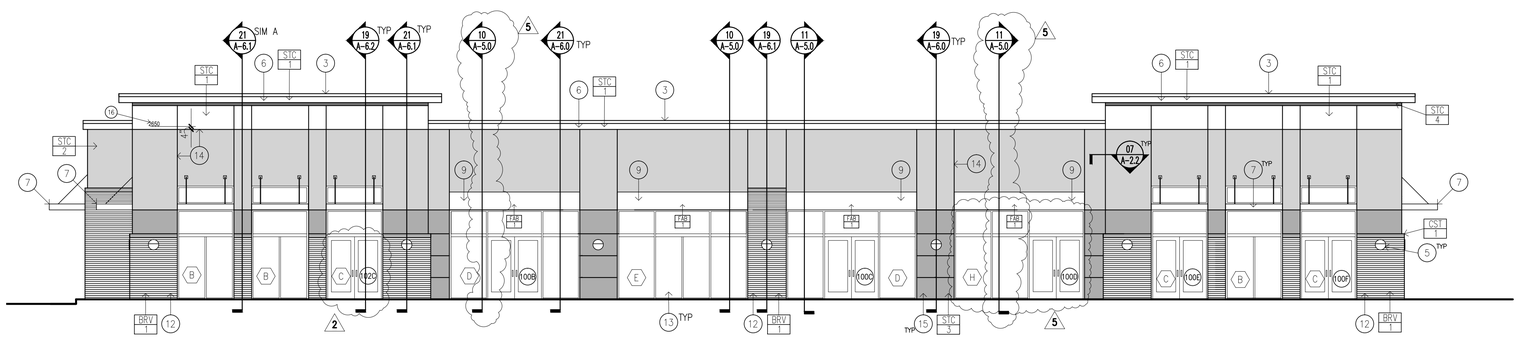

19 SOUTH ELEVATION SCALE 1/8" = 1'-0"

GENERAL NOTES:
1. NOT ALL KEYED NOTES APPLY TO EACH ELEVATION.

KEYED NOTES:
1. 6" X 6" MANUFACTURED METAL CONDUCTOR HEAD AND DOWNSPOUT.
2. RECESSED FIRE DEPARTMENT KEY BOX--MOUNT AT 4'-0" AFF TO CENTERLINE OF BOX.
3. MANUFACTURED METAL COPING.
4. RECESSED WATERPROOF DUPLEX RECEPTACLE (MOUNT AT 1'-6" AFF TO CENTERLINE OF J-BOX)--REFER TO ELECTRICAL ENGINEERING DRAWINGS.
5. WALL-MOUNTED LIGHT FIXTURE (TYPE A)--REFER TO ELECTRICAL ENGINEERING DRAWINGS.
6. STUCCO CORNICE.
7. PRE-ENGINEERED ALUMINUM CANOPY.
8. WALL-MOUNTED LIGHT FIXTURE (TYPE B)--REFER TO ELECTRICAL ENGINEERING DRAWINGS.
9. OPEN-SIDED FABRIC AWNING WITH ALUMINUM FRAMING.
10. 4" X 3'-0" OPENING IN PARAPET FOR GAS PIPE ACCESS TO ROOF.
11. ALUMINUM DRIVE-UP WINDOW AND SHELF ASSEMBLY.
12. BRICK VENEER WITH RUNNING BOND PATTERN.
13. ALUMINUM STOREFRONT AND ENTRANCE SYSTEM WITH 1" INSULATING GLASS ASSEMBLIES.
14. ½" HORIZONTAL OR VERTICAL METAL STUCCO REVEALS--REFER TO 21/A-7.2.
15. STUCCO VENEER.
16. 6" HIGH ALUMINUM ADDRESS NUMERALS--ATTACH TO STUCCO VENEER WITH ADHESIVE AND CENTER LEFT TO RIGHT AS INDICATED.
17. WALL HYDRANT (MOUNT AT 1'-6" AFF TO CENTERLINE OF PIPE)--REFER TO PLUMBING ENGINEERING DRAWINGS.
18. PAINTED HOLLOW METAL DOOR AND FRAME.
19. PRIMARY AND OVERFLOW SCUPPERS.
20. CAST STONE COPING.
21. 4" HIGH BLACK VINYL TEXT.
22. GAS PIPING SCUPPER.
23. WALL-MOUNTED LIGHT FIXTURE (TYPE H)--REFER TO ELECTRICAL ENGINEERING DRAWINGS.
24. CAST IRON DOWNSPOUT BOOTS.
25. PAINTED CONCRETE-FILLED STEEL BOLLARD--REFER TO 15/A-2.4.

23 ELEVATION NOTES

REVISIONS
2 7-1-20
TENANT REVISIONS
5 9-20-20

SHELL ONLY
THE SHOPS AT LUCAS
2650 WEST LUCAS ROAD
LUCAS, TEXAS 75002

DONALD F. SOPRANZI AIA, LEED-AP ARCHITECT
10300 N Central Expressway
Suite 450 Dallas, Texas 75231
Telephone: 817-903-6663
dons@dfsarchitect.com

REGISTERED ARCHITECT DONALD F. SOPRANZI 8063 STATE OF TEXAS

Signature 6-1-20
Sealed 6-1-20
Date
Scale AS SHOWN
Drawn DS, RA
Job 2020-006

A - 5.0

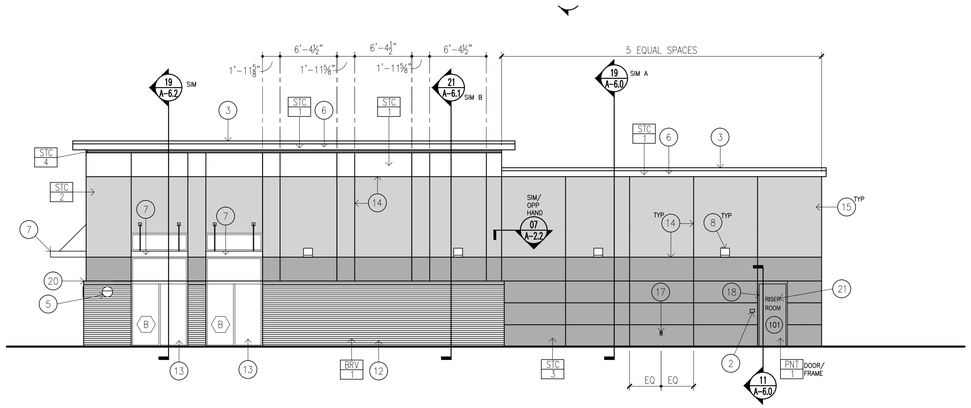

07 EAST ELEVATION

SCALE 3/16" = 1'-0"

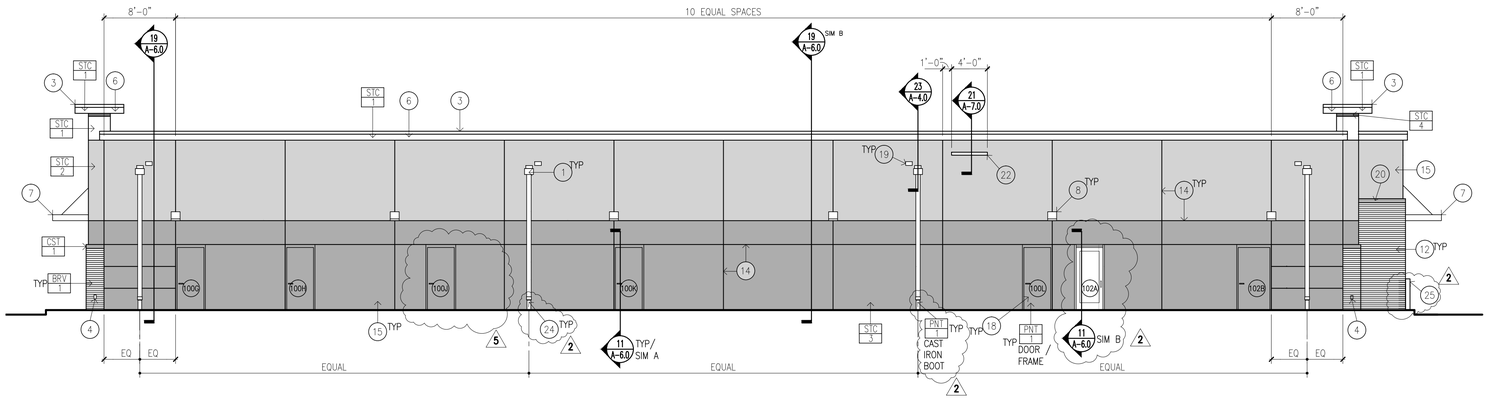

19 NORTH ELEVATION

SCALE 3/16" = 1'-0"

BRICK VENEER

BRV 1
SIOUX CITY BRICK
DISTRIBUTED BY BLACKSON BRICK COMPANY
MIDTOWN IRON SPOT VELOUR
TYPE: MODULAR BRICK
MORTAR: SPECTRUM LIGHT BLACK-N
PATTERN: RUNNING BOND

CAST STONE

CST 1
DALLAS CAST STONE
DISTRIBUTED BY BLACKSON BRICK COMPANY
"NUMBER 9"

STUCCO VENEER

STC 1
MATCH SHERWIN WILLIAMS
SW 7005 PURE WHITE
TEXTURE: FINE

STC 2
MATCH SHERWIN WILLIAMS
SW 7028 INCREDIBLE WHITE
TEXTURE: FINE

STC 3
MATCH SHERWIN WILLIAMS
SW 7634 PEDIMENT
TEXTURE: FINE

STC 4
MATCH SHERWIN WILLIAMS
SW 7018 DOVETAIL
TEXTURE: FINE

AWNINGS

FAB 1
TRI VANTAGE SUNBRELLA
4861 SILICA STONE
ITEM # 874861

FERROUS METAL

PNT 1
SHERWIN WILLIAMS
SW 7634 PEDIMENT
FINISH: SEMI-GLOSS

PNT 2
SHERWIN WILLIAMS
SW 7018 DOVETAIL
FINISH: SEMI-GLOSS

12 MATERIAL LEGEND

GENERAL NOTES:
1. NOT ALL KEYED NOTES APPLY TO EACH ELEVATION.

KEYED NOTES:

1. 6" X 6" MANUFACTURED METAL CONDUCTOR HEAD AND DOWNSPOUT.
2. RECESSED FIRE DEPARTMENT KEY BOX--MOUNT AT 4'-0" AFF TO CENTERLINE OF BOX.
3. MANUFACTURED METAL COPING.
4. RECESSED WATERPROOF DUPLEX RECEPTACLE (MOUNT AT 1'-6" AFF TO CENTERLINE OF J-BOX)--REFER TO ELECTRICAL ENGINEERING DRAWINGS.
5. WALL-MOUNTED LIGHT FIXTURE (TYPE A)--REFER TO ELECTRICAL ENGINEERING DRAWINGS.
6. STUCCO CORNICE.
7. PRE-ENGINEERED ALUMINUM CANOPY.
8. WALL-MOUNTED LIGHT FIXTURE (TYPE B)--REFER TO ELECTRICAL ENGINEERING DRAWINGS.
9. OPEN-SIDED FABRIC AWNING WITH ALUMINUM FRAMING.
10. 4" X 3'-0" OPENING IN PARAPET FOR GAS PIPE ACCESS TO ROOF.
11. ALUMINUM DRIVE-UP WINDOW AND SHELF ASSEMBLY.
12. BRICK VENEER WITH RUNNING BOND PATTERN.
13. ALUMINUM STOREFRONT AND ENTRANCE SYSTEM WITH 1" INSULATING GLASS ASSEMBLIES.
14. ½" HORIZONTAL OR VERTICAL METAL STUCCO REVEALS--REFER TO 21/A-7.2.
15. STUCCO VENEER.
16. 6" HIGH ALUMINUM ADDRESS NUMERALS--ATTACH TO STUCCO VENEER WITH ADHESIVE AND CENTER LEFT TO RIGHT AS INDICATED.
17. WALL HYDRANT (MOUNT AT 1'-6" AFF TO CENTERLINE OF PIPE)--REFER TO PLUMBING ENGINEERING DRAWINGS.
18. PAINTED HOLLOW METAL DOOR AND FRAME.
19. PRIMARY AND OVERFLOW SCUPPERS.
20. CAST STONE COPING.
21. 4" HIGH BLACK VINYL TEXT.
22. GAS PIPING SCUPPER.
23. WALL-MOUNTED LIGHT FIXTURE (TYPE H)--REFER TO ELECTRICAL ENGINEERING DRAWINGS.
24. CAST IRON DOWNSPOUT BOOTS.
25. PAINTED CONCRETE-FILLED STEEL BOLLARD--REFER TO 15/A-2.4.

23 ELEVATION NOTES

REVISIONS

2 7-1-20

TENANT REVISIONS

5 9-20-20

SHELL ONLY

THE SHOPS AT LUCAS

LUCAS, TEXAS 75002

2650 WEST LUCAS ROAD

DONALD F. SOPRANZI AIA, LEED-AP ARCHITECT
10300 N Central Expressway
Suite 450 Dallas, Texas 75231
Telephone: 817-903-6663
dons@dfsarchitect.com

REGISTERED ARCHITECT DONALD FRANK SOPRANZI 8069 STATE OF TEXAS

Signature 6-1-20
Sealed 6-1-20
Date
Scale AS SHOWN
Drawn DS, RA
Job 2020-006

A - 5.1

GENERAL NOTES:

1. NO GYPSUM BOARD AT SIMILAR CONDITION.

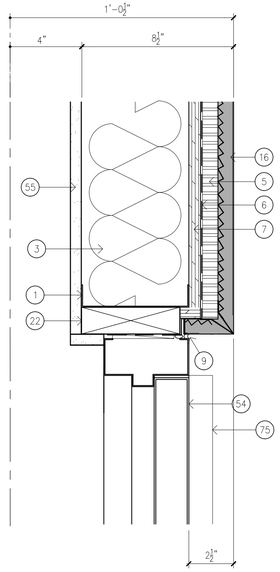

07 ENLARGED DETAIL SCALE 3" = 1'-0"

GENERAL NOTES:

1. STEEL COLUMN AND WIND BRACING AT SIMILAR CONDITION.
2. STUCCO VENEER SILL BELOW AT SIMILAR CONDITION.

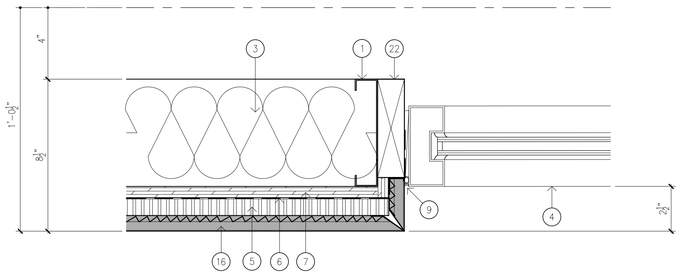

09 ENLARGED DETAIL SCALE 3" = 1'-0"

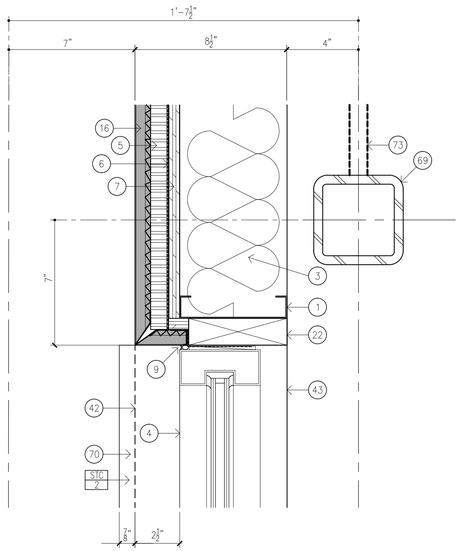

11 ENLARGED DETAIL SCALE 3" = 1'-0"

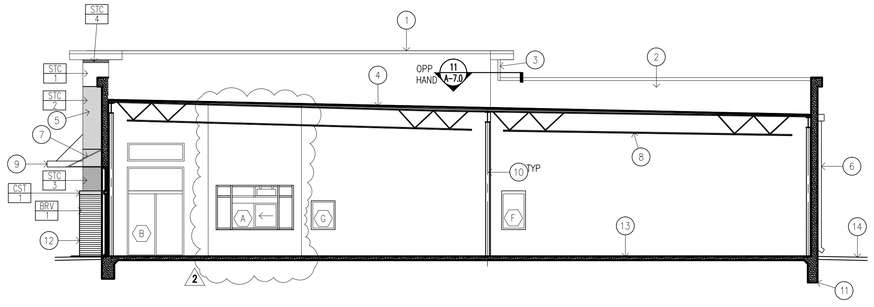

KEYED NOTES:

1. MANUFACTURED METAL COPING BEYOND.
2. TPO PARAPET MEMBRANE BEYOND.
3. TPO METAL VERTICAL TERMINATION BARS AT TPO TO STUCCO TRANSITION.
4. TPO ROOF MEMBRANE WITH RIGID INSULATION.
5. STUCCO VENEER BEYOND.
6. MANUFACTURED 6" X 6" DOWNSPOUT WITH CONDUCTOR HEAD AND DOWNSPOUT BOOT.
7. OPEN-SIDED FABRIC AWNING BEYOND.
8. STEEL ROOF JOISTS WITH METAL DECKING--REFER TO STRUCTURAL ENGINEERING DRAWINGS.
9. PRE-ENGINEERED ALUMINUM CANOPY.
10. STEEL COLUMN--REFER TO STRUCTURAL ENGINEERING DRAWINGS.
11. CONCRETE GRADE BEAM--REFER TO STRUCTURAL ENGINEERING DRAWINGS.
12. BRICK VENEER BEYOND.
13. CONCRETE SLAB-ON-GRADE--REFER TO STRUCTURAL ENGINEERING DRAWINGS.
14. CONCRETE WALK--REFER TO CIVIL ENGINEERING DRAWINGS.

19 BUILDING SECTION SCALE 1/8" = 1'-0"

GENERAL NOTES:

1. NOT ALL KEYED NOTES APPLY TO ALL ENLARGED DETAILS.

KEYED NOTES:

1. 6" METAL STUDS (16 GAUGE) AT 16" ON CENTER MAXIMUM.
2. 2 X WOOD BLOCKING CUT TO FIT.
3. R-19 THERMAL INSULATING BATTS.
4. ALUMINUM STOREFRONT FRAMING SYSTEM WITH 1" INSULATING GLASS ASSEMBLIES.
5. R-5 RIGID INSULATION.
6. WEATHER-RESISTIVE BARRIER--WRAP AROUND WOOD BLOCKING AND TERMINATE WITH SELF-ADHERED FLASHING.
7. ⅝" OSB SHEATHING.
8. ⅞" STUCCO VENEER ABOVE (OMITTED FOR CLARITY).
9. BACKER ROD AND SEALANT.
10. CAST STONE COPING.
11. CAST STONE COPING END UNIT.
12. MANUFACTURED METAL COPING WITH CONTINUOUS CLEAT.
13. ¾" OSB SHEATHING.
14. 2 X 4 WOOD BLOCKING.
15. 4" METAL STUDS (16 GAUGE) AT 16" ON CENTER MAXIMUM FOR MISCELANIOUS CORNICE FRAMING.
16. ⅞" STUCCO VENEER ON METAL LATH.
17. WEATHER-RESISTIVE BARRIER.
18. DRAINAGE CASING.
19. WOOD BLOCKING AS REQUIRED.
20. 60 MIL TPO ROOF MEMBRANE--WRAP AROUND TOP OF PARAPET AS INDICATED.
21. STUCCO VENEER RETURN BEYOND.
22. 2 X 6 WOOD BLOCKING.
23. HORIZONTAL METAL STUCCO REVEAL.
24. STEEL COLUMN BEYOND--REFER TO STRUCTURAL ENGINEERING DRAWINGS.
25. 2 X 6 METAL STUD BOX BEAM HEADER (16 GAUGE).
26. BRICK VENEER WITH METAL WALL TIES.
27. METAL TERMINATION BAR AND SEALANT.
28. CAVITY DRAINAGE MATERIAL.
29. 12" WIDE SELF-ADHERING FLEXIBLE BASE FLASHING.
30. WEATHER-RESISTIVE BARRIER--EXTEND DOWN TO LEDGE FORMED BY FOUNDATION AND SEAL.
31. CONCRETE CONTROL JOINT--REFER TO CIVIL ENGINEERING DRAWINGS.
32. ⅜" WIDE METAL DRIP EDGE SET IN A CONTINUOUS BEAD OF SEALANT.
33. CONCRETE SLAB ON GRADE--REFER TO STRUCTURAL ENGINEERING DRAWINGS.
34. ½" COMPRESSIBLE FILLER WITH SEALED TOP.
35. CONCRETE GRADE BEAM--REFER TO STRUCTURAL ENGINEERING DRAWINGS.
36. VAPOR RETARDER--REFER TO STRUCTURAL ENGINEERING DRAWINGS.
37. 60 MIL TPO ROOF MEMBRANE--WRAP AROUND BOTTOM OF PARAPET OPENING AS INDICATED.
38. MANUFACTURED METAL COPING BEYOND.
39. 2 X 8 METAL BOX BEAM HEADER (16 GAUGE).
40. METAL COUNTERFLASHING AND SEALANT.
41. LINE OF PARAPET BEYOND.
42. LINE OF EXTERIOR WALL BEYOND.
43. LINE OF WOOD BLOCKING BEYOND.
44. STEEL LINEL ANGLE--REFER TO STRUCTURAL ENGINEERING DRAWINGS.
45. BRICK VENEER RETURN BEYOND.
46. ALUMINUM DRIVE-UP WINDOW ASSEMBLY.
47. OPEN-SIDED FABRIC AWNING BEYOND.
48. WOOD BLOCKING AS REQUIRED FOR CANOPY SUPPORT.
49. PRE-ENGINEERED ALUMINUM CANOPY.
50. METAL SILL FLASHING AT CANOPY.
51. 1 X WOOD BLOCKING CUT TO FIT.
52. CONCRETE WALK--REFER TO CIVIL ENGINEERING DRAWINGS.
53. 1½" WIDE METAL DRIP EDGE SET IN CONTINUOUS BEAD OF SEALANT.
54. HOLLOW METAL DOOR AND FRAME.
55. ⅝" TYPE X GYPSUM BOARD--TAPE AND BED JOINTS ONLY.
56. GYPSUM BOARD RETURN BEYOND.
57. SEALANT TAPE.
58. OPEN-SIDED FABRIC AWNING.
59. RECESSED LED ACCENT LIGHT FIXTURE (TYPE A)--REFER TO ELECTRICAL ENGINEERING DRAWINGS.
60. SEALANT.
61. TPO FLASHING LAYERS WITH TPO SEALANT AS INDICATED.
62. PRE-FINISHED METAL SCUPPER FLANGE AT OPENING PERIMETER.
63. PRE-FINISHED METAL SCUPPER SLEEVE.
64. 60 MIL FULLY ADHERED TPO ROOF MEMBRANE.
65. R-30 RIGID INSULATION.
66. METAL DECKING--REFER TO STRUCTURAL ENGINEERING DRAWINGS.
67. STEEL JOISTS--REFER TO STRUCTURAL ENGINEERING DRAWINGS.
68. STEEL BEAM--REFER TO STRUCTURAL ENGINEERING DRAWINGS.
69. STEEL COLUMN--REFER TO STRUCTURAL ENGINEERING DRAWINGS.
70. STUCCO VENEER SILL BELOW.
71. RECESSED WATERPROOF DUPLEX RECEPTACLE--REFER TO ELECTRICAL ENGINEERING DRAWINGS.
72. 4" METAL STUDS (16 GAUGE) AT 16" ON CENTER MAXIMUM.
73. WIND BRACING--REFER TO STRUCTURAL ENGINEERING DRAWINGS.
74. ALUMINUM ENTRANCE SYSTEM WITH 1" INSULATING GLASS ASSEMBLIES.
75. ALUMINUM THRESHOLD BELOW.

23 ENLARGED DETAIL NOTES

REVISIONS

2 7-1-20

TENANT REVISIONS

SHELL ONLY

THE SHOPS AT LUCAS

2650 WEST LUCAS ROAD LUCAS, TEXAS 75002

DONALD F. SOPRANZI AIA, LEEDAP ARCHITECT
10300 N Central Expressway
Suite 450 Dallas, Texas 75231
Telephone: 817-903-6663
dons@dfsarchitect.com

STATE OF TEXAS 8069 REGISTERED ARCHITECT

Signature 6-1-20

Sealed 6-1-20

Date

Scale AS SHOWN

Drawn DS, RA

Job 2020-006

A - 5.2

GENERAL NOTES:

1. METAL STUD FRAMING IS CONCEPTUAL ONLY. CONTRACTOR IS RESPONSIBLE FOR ENGINEERING OF METAL STUD FRAMING ASSEMBLIES.
2. ROOF FRAMING PARALLEL TO EXTERIOR WALL AT SIMILAR "A" CONDITION.
3. LOWER HORIZONTAL METAL STUCCO REVEALS OMITTED AT SIMILAR "B" CONDITION.
4. ⅝" TYPE X GYPSUM BOARD AT LEASE 102 ONLY. (2)

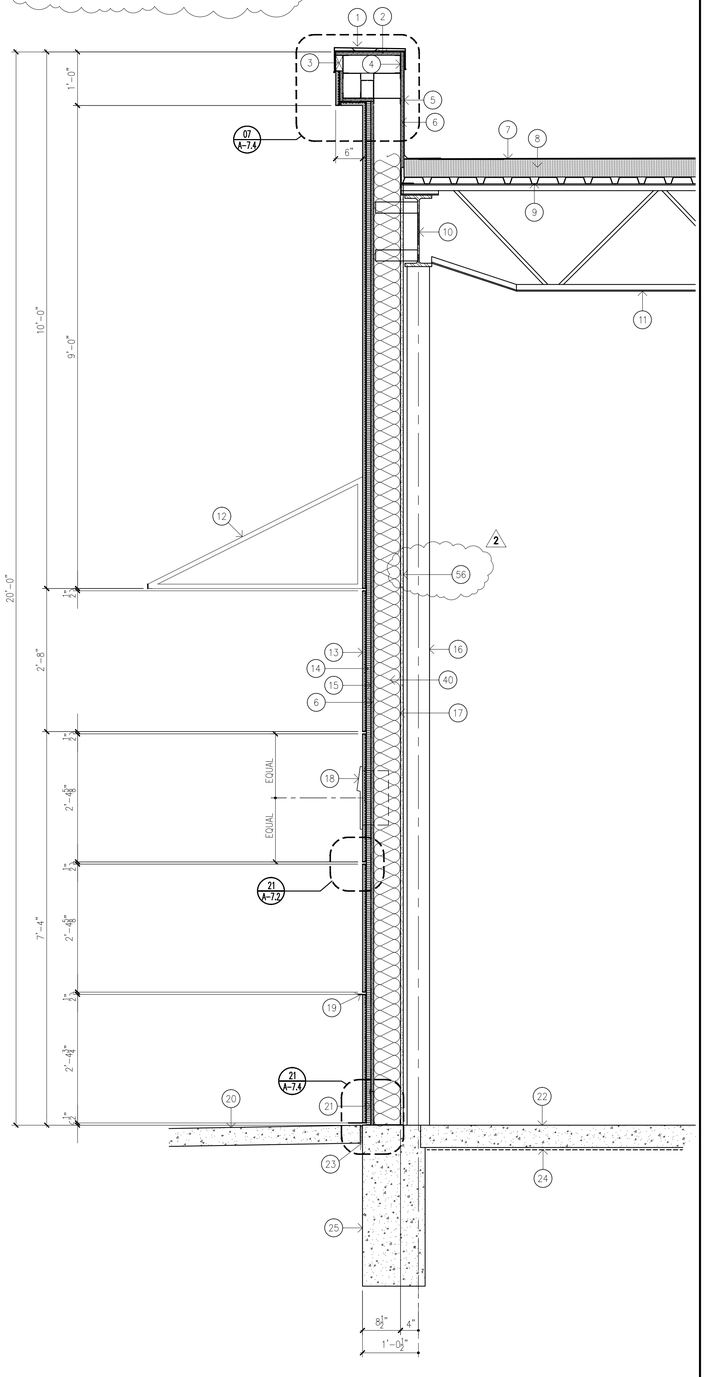

19 SECTION SCALE : 3/4"=1'-0"

GENERAL NOTES:

1. METAL STUD FRAMING IS CONCEPTUAL ONLY. CONTRACTOR IS RESPONSIBLE FOR ENGINEERING OF METAL STUD FRAMING ASSEMBLIES.

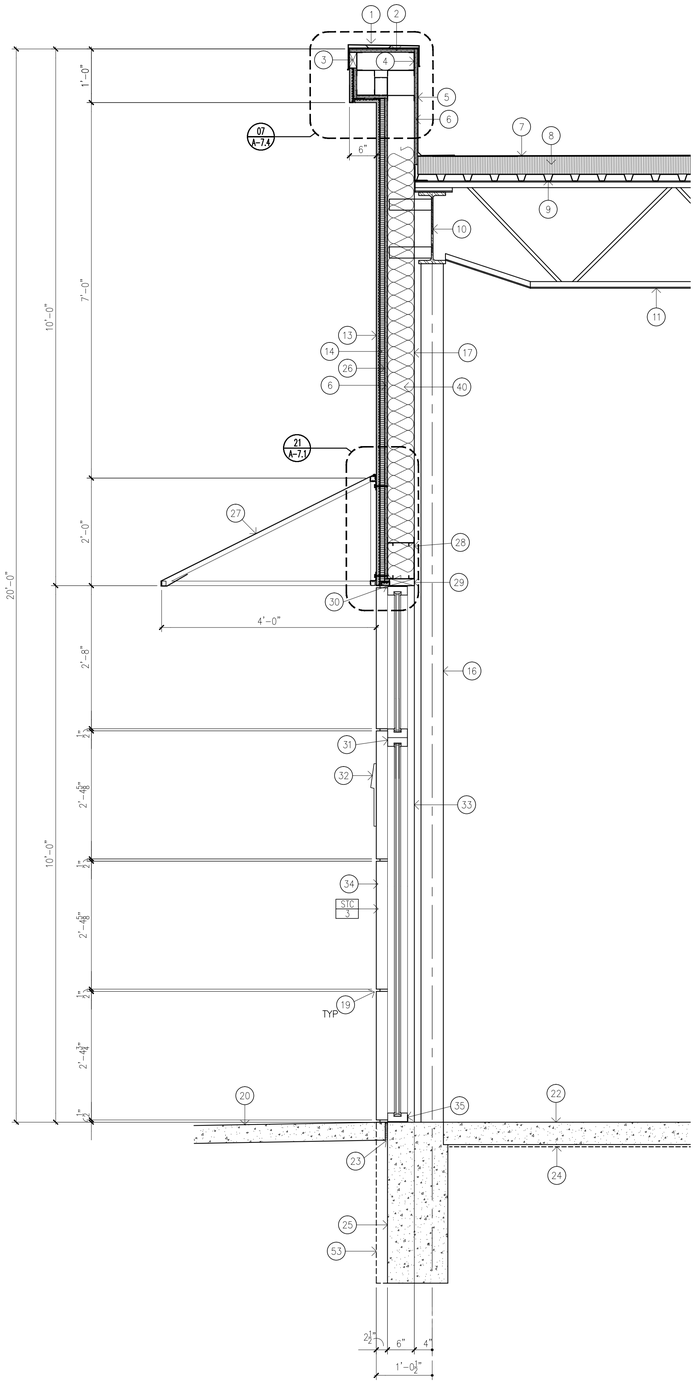

21 SECTION SCALE : 3/4"=1'-0"

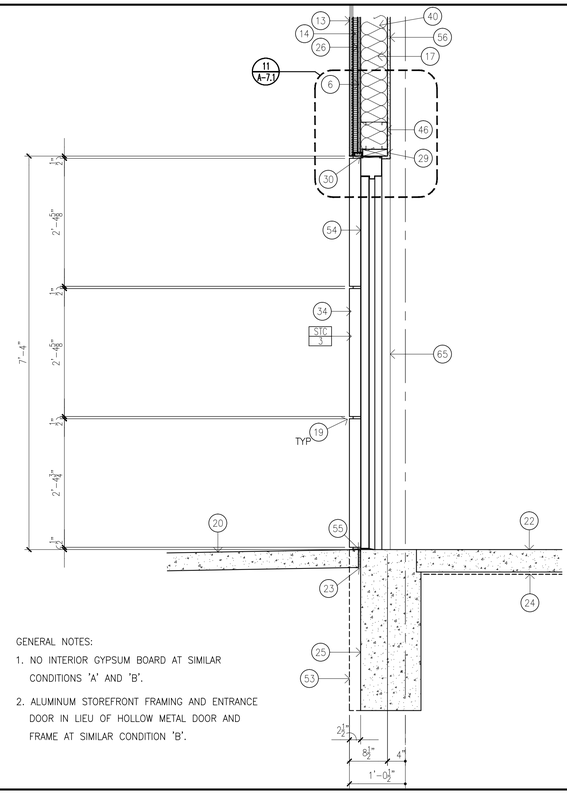

GENERAL NOTES:

1. NO INTERIOR GYPSUM BOARD AT SIMILAR CONDITIONS 'A' AND 'B'.
2. ALUMINUM STOREFRONT FRAMING AND ENTRANCE DOOR IN LIEU OF HOLLOW METAL DOOR AND FRAME AT SIMILAR CONDITION 'B'.

11 SECTION SCALE : 3/4"=1'-0"

GENERAL NOTES:
1. NOT ALL KEYED NOTES APPLY TO ALL WALL SECTIONS.

KEYED NOTES:

1. MANUFACTURED METAL COPING WITH CONTINUOUS CLEAT.
2. ¾" OSB SHEATHING.
3. 2 X 4 WOOD BLOCKING.
4. 4" METAL STUDS (16 GAUGE) AT 16" ON CENTER MAXIMUM FOR MISCELLANEOUS CORNICE FRAMING.
5. 60 MIL TPO ROOF MEMBRANE--WRAP AROUND TOP OF PARAPET AS INDICATED.
6. ⅝" OSB SHEATHING.
7. 60 MIL FULLY ADHERED TPO ROOF MEMBRANE.
8. R-30 RIGID INSULATION.
9. METAL DECKING--REFER TO STRUCTURAL ENGINEERING DRAWINGS.
10. STEEL BEAM--REFER TO STRUCTURAL ENGINEERING DRAWINGS.
11. STEEL JOISTS--REFER TO STRUCTURAL ENGINEERING DRAWINGS.
12. OPEN-SIDED FABRIC AWNING BEYOND.
13. ⅞" STUCCO VENEER.
14. R-5 RIGID INSULATION.
15. WEATHER-RESISTIVE BARRIER--EXTEND DOWN TO LEDGE FORMED BY FOUNDATION AND SEAL.
16. STEEL COLUMN BEYOND--REFER TO STRUCTURAL ENGINEERING DRAWINGS.
17. 2 X 6 METAL STUDS (16 GAUGE) AT 16" ON CENTER MAXIMUM.
18. RECESSED LED ACCENT LIGHT FIXTURE (TYPE A)--REFER TO ELECTRICAL ENGINEERING DRAWINGS.
19. HORIZONTAL METAL STUCCO REVEAL.
20. CONCRETE WALK--REFER TO CIVIL ENGINEERING DRAWINGS.
21. FLEXIBLE BASE FLASHING WITH METAL DRIP EDGE AND TERMINATION BAR.
22. CONCRETE SLAB ON GRADE--REFER TO STRUCTURAL ENGINEERING DRAWINGS.
23. ½" COMPRESSIBLE FILLER WITH SEALED TOP.
24. VAPOR RETARDER--REFER TO STRUCTURAL ENGINEERING DRAWINGS.
25. CONCRETE GRADE BEAM--REFER TO STRUCTURAL ENGINEERING DRAWINGS.
26. WEATHER-RESISTIVE BARRIER--WRAP AROUND WOOD BLOCKING AS INDICATED AND TERMINATE WITH SELF-ADHESIVE FLASHING.
27. OPEN-SIDED FABRIC AWNING.
28. 2 X 8 METAL STUD BOX BEAM HEADER (16 GAUGE).
29. 2 X 6 WOOD BLOCKING.
30. BACKER ROD AND SEALANT.
31. ALUMINUM STOREFRONT FRAMING WITH 1" INSULATING GLASS ASSEMBLIES.
32. RECESSED LED ACCENT LIGHT FIXTURE (TYPE A) BEYOND--REFER TO ELECTRICAL ENGINEERING DRAWINGS.
33. LINE OF WOOD BLOCKING BEYOND.
34. STUCCO VENEER RETURN BEYOND.
35. ALUMINUM STOREFRONT SILL FLASHING.
36. CONCRETE CONTROL JOINT--REFER TO CIVIL ENGINEERING DRAWINGS.
37. CAST STONE COPING.
38. FLEXIBLE SILL FLASHING WITH TERMINATION BAR.
39. BRICK VENEER WITH METAL WALL TIES.
40. R-19 THERMAL INSULATING BATTS.
41. LINE OF EXTERIOR WALL BEYOND.
42. WOOD BLOCKING AS REQUIRED.
43. CAVITY DRAINAGE MATERIAL.
44. PRE-ENGINEERED ALUMINUM CANOPY BEYOND.
45. WOOD BLOCKING AS REQUIRED FOR CANOPY TIE ROD SUPPORT.
46. 2 X 6 METAL STUD BOX BEAM HEADER (16 GAUGE).
47. PRE-ENGINEERED ALUMINUM CANOPY.
48. 2 X WOOD BLOCKING CUT TO FIT.
49. METAL SILL FLASHING AT CANOPY.
50. 1 X WOOD BLOCKING CUT TO FIT.
51. CAST STONE COPING BEYOND.
52. BRICK VENEER RETURN BEYOND.
53. LINE OF GRADE BEAM BEYOND.
54. HOLLOW METAL DOOR AND FRAME.
55. ALUMINUM THRESHOLD.
56. ⅝" TYPE X GYPSUM BOARD.
57. MANUFACTURED METAL COPING BEYOND.
58. METAL COUNTERFLASHING.
59. 60 MIL TPO ROOF MEMBRANE--WRAP AROUND BOTTOM OF PARAPET OPENING AS INDICATED.
60. 60 MIL TPO ROOF MEMBRANE ON PARAPET BEYOND.
61. TAPERED INSULATION CRICKET BEYOND.
62. STEEL BEAM BEYOND--REFER TO STRUCTURAL ENGINEERING DRAWINGS.
63. WOOD BLOCKING AS REQUIRED FOR CANOPY SUPPORT.
64. STEEL ANGLE LINTEL--REFER TO STRUCTURAL ENGINEERING DRAWINGS.
65. GYPSUM BOARD RETURN BEYOND.
66. ALUMINUM DRIVE-UP WINDOW ASSEMBLY.
67. CONCRETE DRIVE WITH INTEGRAL CURB--REFER TO CIVIL ENGINEERING DRAWINGS.

23 SECTION NOTES

REVISIONS
(2) 7-1-20
TENANT REVISIONS

SHELL ONLY

THE SHOPS AT LUCAS

LUCAS, TEXAS 75002

2650 WEST LUCAS ROAD

DONALD F. SOPRANZI AIA, LEED AP ARCHITECT

10300 N Central Expressway
Suite 450 Dallas, Texas 75231
Telephone: 817-903-6663
dons@dfsarchitect.com

REGISTERED ARCHITECT DONALD F. SOPRANZI 8069 STATE OF TEXAS

Signature 6-1-20

Sealed 6-1-20

Date

Scale

Drawn DS, RA

Job 2020-006

A-6.0

GENERAL NOTES:

1. METAL STUD FRAMING IS CONCEPTUAL ONLY. CONTRACTOR IS RESPONSIBLE FOR ENGINEERING OF METAL STUD FRAMING ASSEMBLIES.

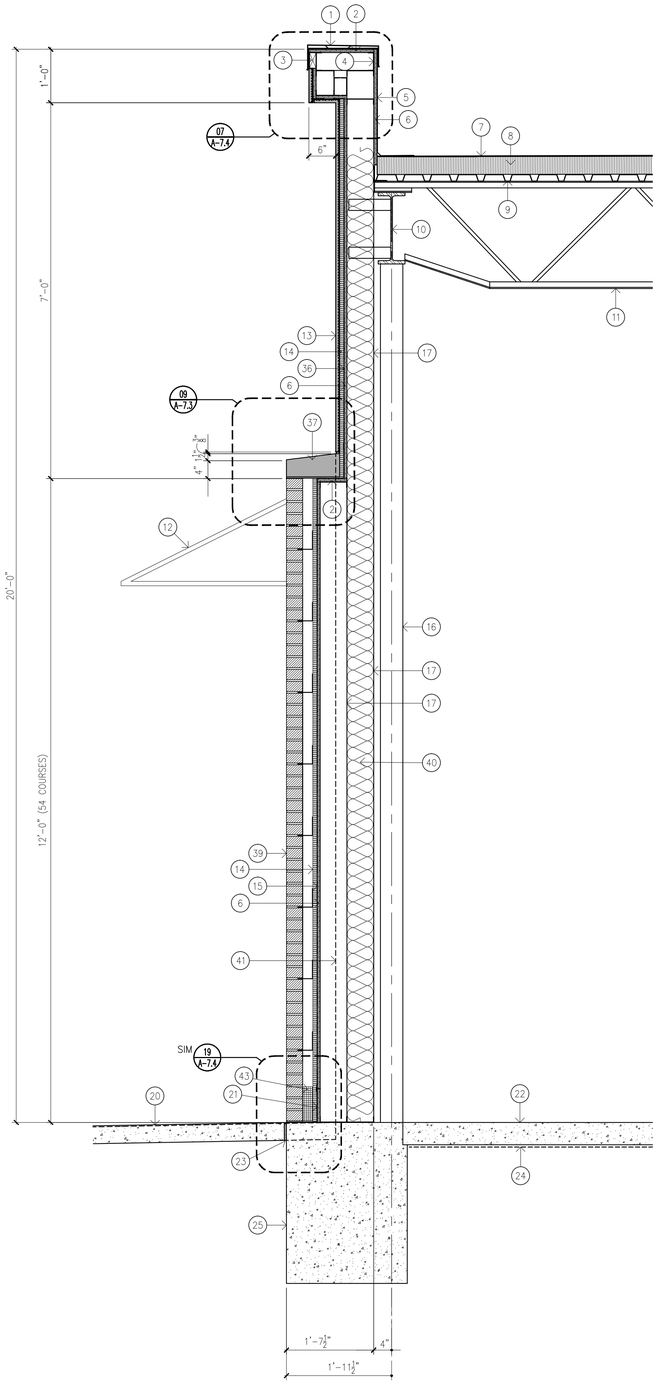

19 SECTION SCALE : 3/4"=1'-0"

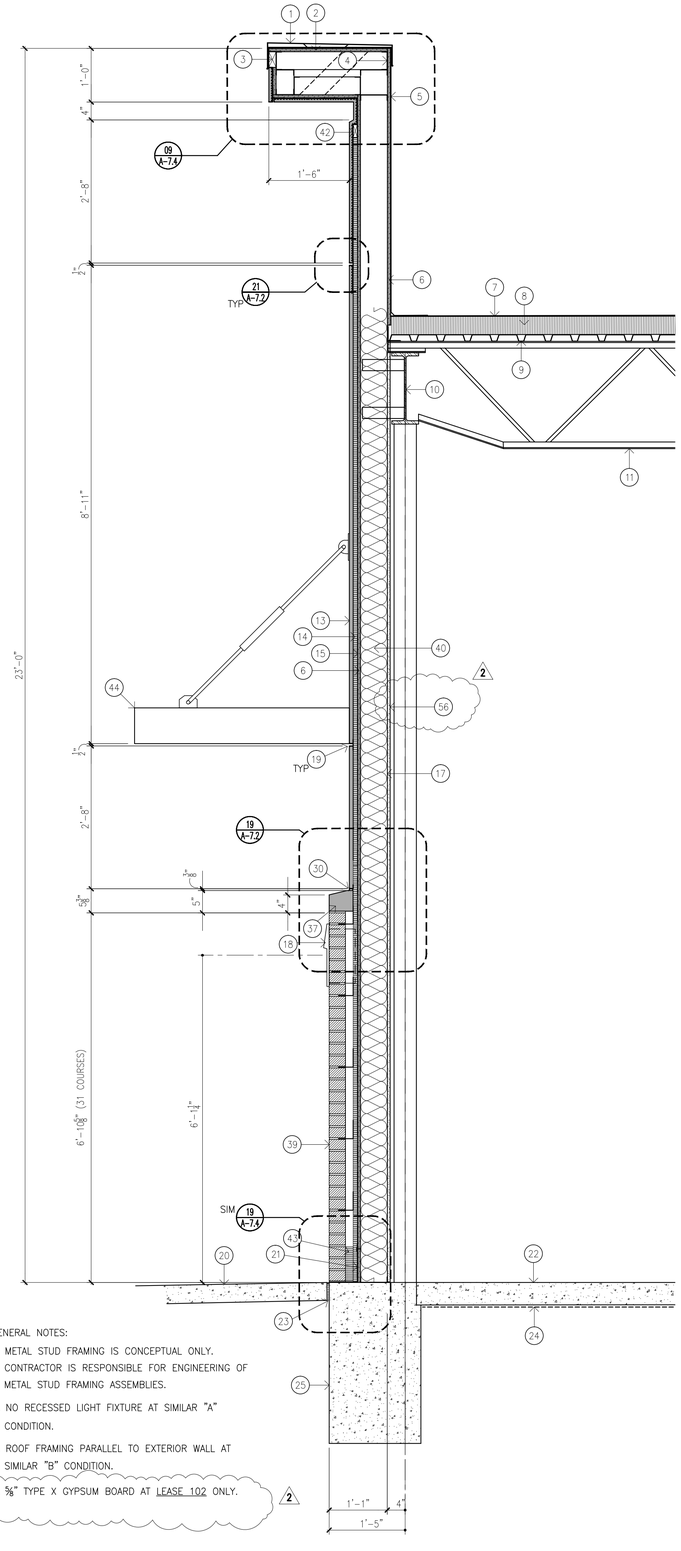

GENERAL NOTES:

1. METAL STUD FRAMING IS CONCEPTUAL ONLY. CONTRACTOR IS RESPONSIBLE FOR ENGINEERING OF METAL STUD FRAMING ASSEMBLIES.
2. NO RECESSED LIGHT FIXTURE AT SIMILAR "A" CONDITION.
3. ROOF FRAMING PARALLEL TO EXTERIOR WALL AT SIMILAR "B" CONDITION.
4. ⅝" TYPE X GYPSUM BOARD AT LEASE 102 ONLY. 2

21 SECTION SCALE : 3/4"=1'-0"

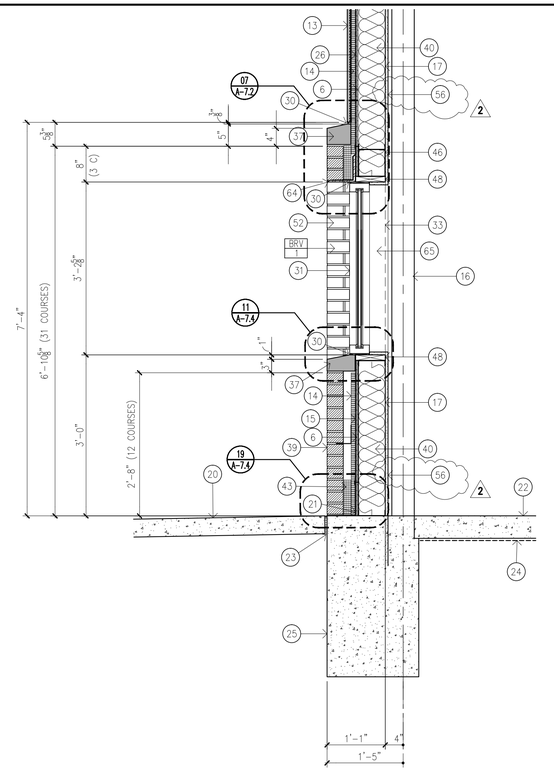

11 SECTION SCALE : 3/4"=1'-0"

GENERAL NOTES:
1. NOT ALL KEYED NOTES APPLY TO ALL WALL SECTIONS.

KEYED NOTES:

1. MANUFACTURED METAL COPING WITH CONTINUOUS CLEAT.
2. ½" OSB SHEATHING.
3. 2 X 4 WOOD BLOCKING.
4. 4" METAL STUDS (16 GAUGE) AT 16" ON CENTER MAXIMUM FOR MISCELLANEOUS CORNICE FRAMING.
5. 60 MIL TPO ROOF MEMBRANE--WRAP AROUND TOP OF PARAPET AS INDICATED.
6. ⅝" OSB SHEATHING.
7. 60 MIL FULLY ADHERED TPO ROOF MEMBRANE.
8. R-30 RIGID INSULATION.
9. METAL DECKING--REFER TO STRUCTURAL ENGINEERING DRAWINGS.
10. STEEL BEAM--REFER TO STRUCTURAL ENGINEERING DRAWINGS.
11. STEEL JOISTS--REFER TO STRUCTURAL ENGINEERING DRAWINGS.
12. OPEN-SIDED FABRIC AWNING BEYOND.
13. ⅞" STUCCO VENEER.
14. R-5 RIGID INSULATION.
15. WEATHER-RESISTIVE BARRIER--EXTEND DOWN TO LEDGE FORMED BY FOUNDATION AND SEAL.
16. STEEL COLUMN BEYOND--REFER TO STRUCTURAL ENGINEERING DRAWINGS.
17. 2 X 6 METAL STUDS (16 GAUGE) AT 16" ON CENTER MAXIMUM.
18. RECESSED LED ACCENT LIGHT FIXTURE (TYPE A)--REFER TO ELECTRICAL ENGINEERING DRAWINGS.
19. HORIZONTAL METAL STUCCO REVEAL.
20. CONCRETE WALK--REFER TO CIVIL ENGINEERING DRAWINGS.
21. FLEXIBLE BASE FLASHING WITH METAL DRIP EDGE AND TERMINATION BAR.
22. CONCRETE SLAB ON GRADE--REFER TO STRUCTURAL ENGINEERING DRAWINGS.
23. ½" COMPRESSIBLE FILLER WITH SEALED TOP.
24. VAPOR RETARDER--REFER TO STRUCTURAL ENGINEERING DRAWINGS.
25. CONCRETE GRADE BEAM--REFER TO STRUCTURAL ENGINEERING DRAWINGS.
26. WEATHER-RESISTIVE BARRIER--WRAP AROUND WOOD BLOCKING AS INDICATED AND TERMINATE WITH SELF-ADHESIVE FLASHING.
27. OPEN-SIDED FABRIC AWNING.
28. 2 X 8 METAL STUD BOX BEAM HEADER (16 GAUGE).
29. 2 X 6 WOOD BLOCKING.
30. BACKER ROD AND SEALANT.
31. ALUMINUM STOREFRONT FRAMING WITH 1" INSULATING GLASS ASSEMBLIES.
32. RECESSED LED ACCENT LIGHT FIXTURE (TYPE A) BEYOND--REFER TO ELECTRICAL ENGINEERING DRAWINGS.
33. LINE OF WOOD BLOCKING BEYOND.
34. STUCCO VENEER RETURN BEYOND.
35. ALUMINUM STOREFRONT SILL FLASHING.
36. CONCRETE CONTROL JOINT--REFER TO CIVIL ENGINEERING DRAWINGS.
37. CAST STONE COPING.
38. FLEXIBLE SILL FLASHING WITH TERMINATION BAR.
39. BRICK VENEER WITH METAL WALL TIES.
40. R-19 THERMAL INSULATING BATTS.
41. LINE OF EXTERIOR WALL BEYOND.
42. WOOD BLOCKING AS REQUIRED.
43. CAVITY DRAINAGE MATERIAL.
44. PRE-ENGINEERED ALUMINUM CANOPY BEYOND.
45. WOOD BLOCKING AS REQUIRED FOR CANOPY TIE ROD SUPPORT.
46. 2 X 6 METAL STUD BOX BEAM HEADER (16 GAUGE).
47. PRE-ENGINEERED ALUMINUM CANOPY.
48. 2 X WOOD BLOCKING CUT TO FIT.
49. METAL SILL FLASHING AT CANOPY.
50. 1 X WOOD BLOCKING CUT TO FIT.
51. CAST STONE COPING BEYOND.
52. BRICK VENEER RETURN BEYOND.
53. LINE OF GRADE BEAM BEYOND.
54. HOLLOW METAL DOOR AND FRAME.
55. ALUMINUM THRESHOLD.
56. ⅝" TYPE X GYPSUM BOARD.
57. MANUFACTURED METAL COPING BEYOND.
58. METAL COUNTERFLASHING.
59. 60 MIL TPO ROOF MEMBRANE--WRAP AROUND BOTTOM OF PARAPET OPENING AS INDICATED.
60. 60 MIL TPO ROOF MEMBRANE ON PARAPET BEYOND.
61. TAPERED INSULATION CRICKET BEYOND.
62. STEEL BEAM BEYOND--REFER TO STRUCTURAL ENGINEERING DRAWINGS.
63. WOOD BLOCKING AS REQUIRED FOR CANOPY SUPPORT.
64. STEEL ANGLE LINTEL--REFER TO STRUCTURAL ENGINEERING DRAWINGS.
65. GYPSUM BOARD RETURN BEYOND.
66. ALUMINUM DRIVE-UP WINDOW ASSEMBLY.
67. CONCRETE DRIVE WITH INTEGRAL CURB--REFER TO CIVIL ENGINEERING DRAWINGS.

23 SECTION NOTES

REVISIONS

2 7-1-20

TENANT REVISIONS

SHELL ONLY

THE SHOPS AT LUCAS

LUCAS, TEXAS 75002

2650 WEST LUCAS ROAD

DONALD F. SOPRANZI AIA, LEED AP ARCHITECT

10300 N Central Expressway
Suite 450 Dallas, Texas 75231
Telephone: 817-903-6663
dons@dfsarchitect.com

Signature 6-1-20

Sealed 6-1-20

Date

Scale

Drawn DS, RA

Job 2020-006

A-6.1

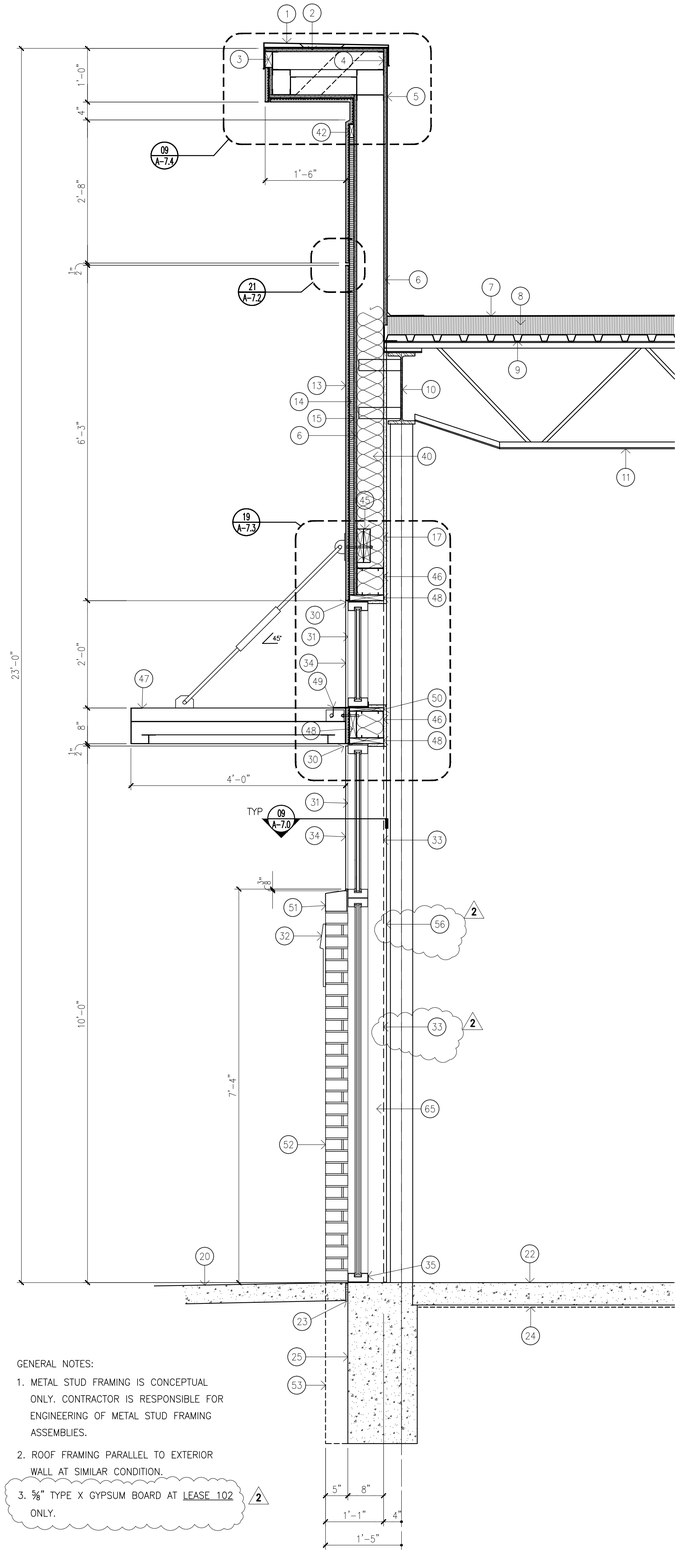

GENERAL NOTES:

1. METAL STUD FRAMING IS CONCEPTUAL ONLY. CONTRACTOR IS RESPONSIBLE FOR ENGINEERING OF METAL STUD FRAMING ASSEMBLIES.
2. ROOF FRAMING PARALLEL TO EXTERIOR WALL AT SIMILAR CONDITION.
3. 5/8" TYPE X GYPSUM BOARD AT LEASE 102 ONLY. (2)

19 SECTION SCALE : 3/4"=1'-0"

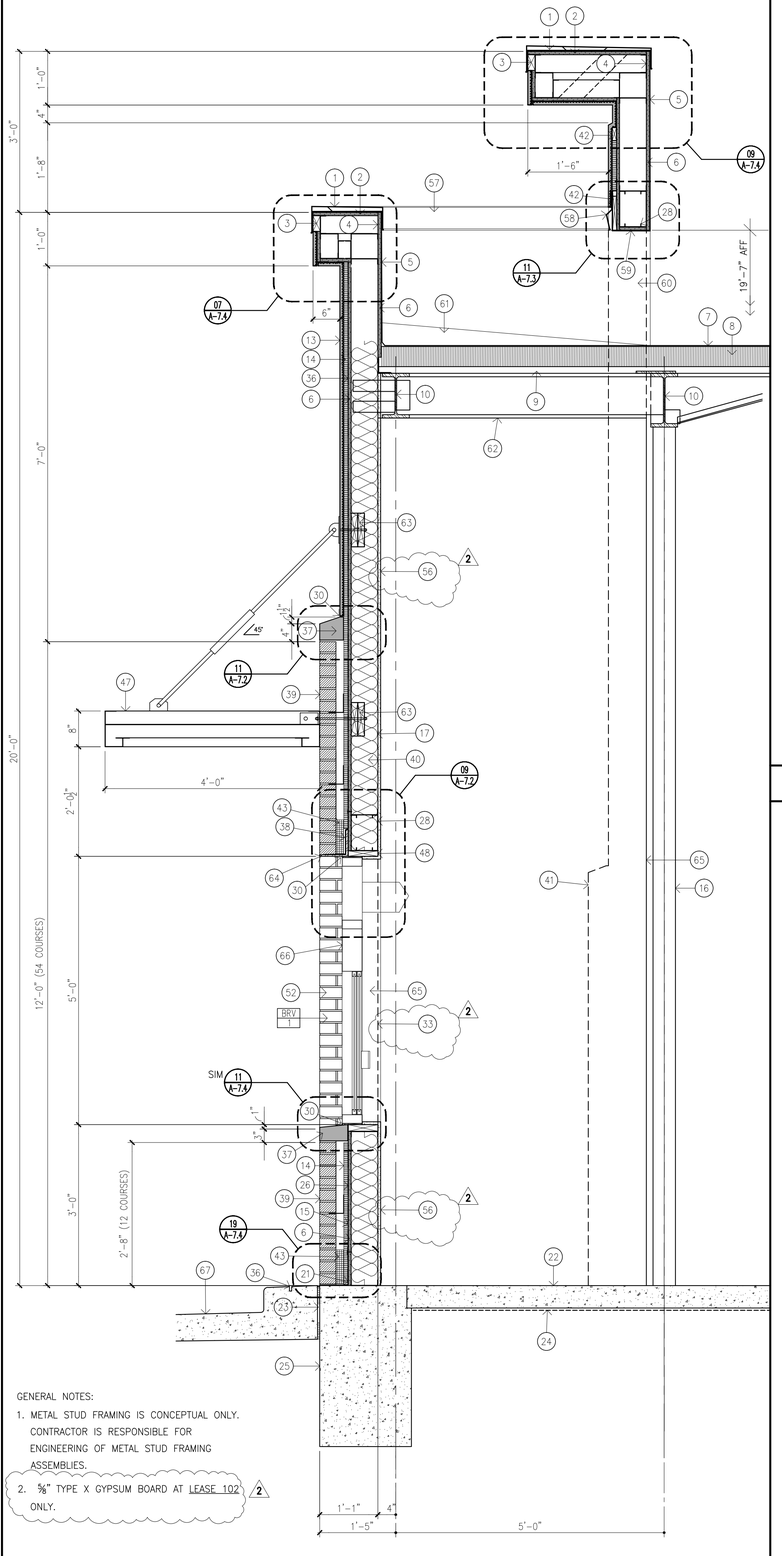

GENERAL NOTES:

1. METAL STUD FRAMING IS CONCEPTUAL ONLY. CONTRACTOR IS RESPONSIBLE FOR ENGINEERING OF METAL STUD FRAMING ASSEMBLIES.
2. 5/8" TYPE X GYPSUM BOARD AT LEASE 102 ONLY. (2)

21 SECTION SCALE : 3/4"=1'-0"

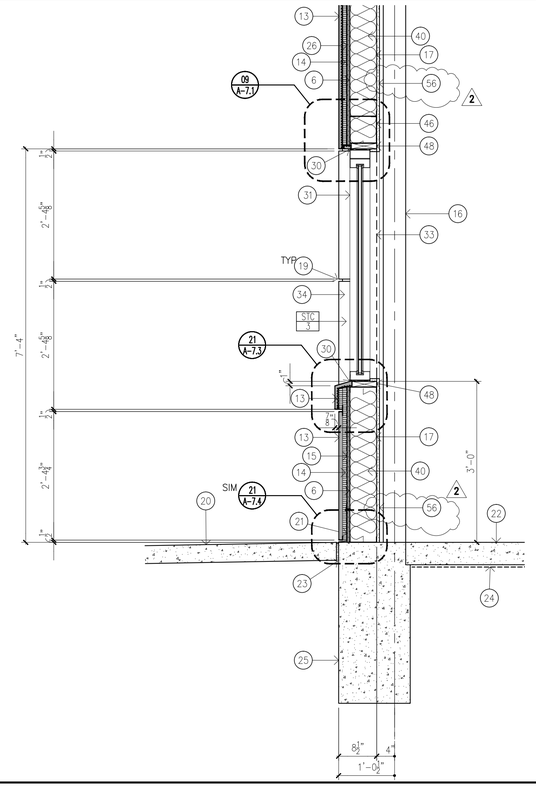

11 SECTION SCALE : 3/4"=1'-0"

GENERAL NOTES:
1. NOT ALL KEYED NOTES APPLY TO ALL WALL SECTIONS.

KEYED NOTES:

1. MANUFACTURED METAL COPING WITH CONTINUOUS CLEAT.
2. ⅞" OSB SHEATHING.
3. 2 X 4 WOOD BLOCKING.
4. 4" METAL STUDS (16 GAUGE) AT 16" ON CENTER MAXIMUM FOR MISCELLANEOUS CORNICE FRAMING.
5. 60 MIL TPO ROOF MEMBRANE--WRAP AROUND TOP OF PARAPET AS INDICATED.
6. ⅝" OSB SHEATHING.
7. 60 MIL FULLY ADHERED TPO ROOF MEMBRANE.
8. R-30 RIGID INSULATION.
9. METAL DECKING--REFER TO STRUCTURAL ENGINEERING DRAWINGS.
10. STEEL BEAM--REFER TO STRUCTURAL ENGINEERING DRAWINGS.
11. STEEL JOISTS--REFER TO STRUCTURAL ENGINEERING DRAWINGS.
12. OPEN-SIDED FABRIC AWNING BEYOND.
13. ⅞" STUCCO VENEER.
14. R-5 RIGID INSULATION.
15. WEATHER-RESISTIVE BARRIER--EXTEND DOWN TO LEDGE FORMED BY FOUNDATION AND SEAL.
16. STEEL COLUMN BEYOND--REFER TO STRUCTURAL ENGINEERING DRAWINGS.
17. 2 X 6 METAL STUDS (16 GAUGE) AT 16" ON CENTER MAXIMUM.
18. RECESSED LED ACCENT LIGHT FIXTURE (TYPE A)--REFER TO ELECTRICAL ENGINEERING DRAWINGS.
19. HORIZONTAL METAL STUCCO REVEAL.
20. CONCRETE WALK--REFER TO CIVIL ENGINEERING DRAWINGS.
21. FLEXIBLE BASE FLASHING WITH METAL DRIP EDGE AND TERMINATION BAR.
22. CONCRETE SLAB ON GRADE--REFER TO STRUCTURAL ENGINEERING DRAWINGS.
23. ½" COMPRESSIBLE FILLER WITH SEALED TOP.
24. VAPOR RETARDER--REFER TO STRUCTURAL ENGINEERING DRAWINGS.
25. CONCRETE GRADE BEAM--REFER TO STRUCTURAL ENGINEERING DRAWINGS.
26. WEATHER-RESISTIVE BARRIER--WRAP AROUND WOOD BLOCKING AS INDICATED AND TERMINATE WITH SELF-ADHESIVE FLASHING.
27. OPEN-SIDED FABRIC AWNING.
28. 2 X 8 METAL STUD BOX BEAM HEADER (16 GAUGE).
29. 2 X 6 WOOD BLOCKING.
30. BACKER ROD AND SEALANT.
31. ALUMINUM STOREFRONT FRAMING WITH 1" INSULATING GLASS ASSEMBLIES.
32. RECESSED LED ACCENT LIGHT FIXTURE (TYPE A) BEYOND--REFER TO ELECTRICAL ENGINEERING DRAWINGS.
33. LINE OF WOOD BLOCKING BEYOND.
34. STUCCO VENEER RETURN BEYOND.
35. ALUMINUM STOREFRONT SILL FLASHING.
36. CONCRETE CONTROL JOINT--REFER TO CIVIL ENGINEERING DRAWINGS.
37. CAST STONE COPING.
38. FLEXIBLE SILL FLASHING WITH TERMINATION BAR.
39. BRICK VENEER WITH METAL WALL TIES.
40. R-19 THERMAL INSULATING BATTS.
41. LINE OF EXTERIOR WALL BEYOND.
42. WOOD BLOCKING AS REQUIRED.
43. CAVITY DRAINAGE MATERIAL.
44. PRE-ENGINEERED ALUMINUM CANOPY BEYOND.
45. WOOD BLOCKING AS REQUIRED FOR CANOPY TIE ROD SUPPORT.
46. 2 X 6 METAL STUD BOX BEAM HEADER (16 GAUGE).
47. PRE-ENGINEERED ALUMINUM CANOPY.
48. 2 X WOOD BLOCKING CUT TO FIT.
49. METAL SILL FLASHING AT CANOPY.
50. 1 X WOOD BLOCKING CUT TO FIT.
51. CAST STONE COPING BEYOND.
52. BRICK VENEER RETURN BEYOND.
53. LINE OF GRADE BEAM BEYOND.
54. HOLLOW METAL DOOR AND FRAME.
55. ALUMINUM THRESHOLD.
56. ⅝" TYPE X GYPSUM BOARD.
57. MANUFACTURED METAL COPING BEYOND.
58. METAL COUNTERFLASHING.
59. 60 MIL TPO ROOF MEMBRANE--WRAP AROUND BOTTOM OF PARAPET OPENING AS INDICATED.
60. 60 MIL TPO ROOF MEMBRANE ON PARAPET BEYOND.
61. TAPERED INSULATION CRICKET BEYOND.
62. STEEL BEAM BEYOND--REFER TO STRUCTURAL ENGINEERING DRAWINGS.
63. WOOD BLOCKING AS REQUIRED FOR CANOPY SUPPORT.
64. STEEL ANGLE LINTEL--REFER TO STRUCTURAL ENGINEERING DRAWINGS.
65. GYPSUM BOARD RETURN BEYOND.
66. ALUMINUM DRIVE-UP WINDOW ASSEMBLY.
67. CONCRETE DRIVE WITH INTEGRAL CURB--REFER TO CIVIL ENGINEERING DRAWINGS.

23 SECTION NOTES

REVISIONS

2 7-1-20

TENANT REVISIONS

SHELL ONLY

THE SHOPS AT LUCAS

LUCAS, TEXAS 75002

2650 WEST LUCAS ROAD

DONALD F. SOPRANZI AIA, LEED AP ARCHITECT

10300 N Central Expressway
Suite 450 Dallas, Texas 75231
Telephone: 817-903-6663
dons@dfsarchitect.com

REGISTERED ARCHITECT DONALD F. SOPRANZI 8069 STATE OF TEXAS

Signature 6-1-20

Sealed 6-1-20

Date

Scale

Drawn DS, RA

Job 2020-006

A-6.2

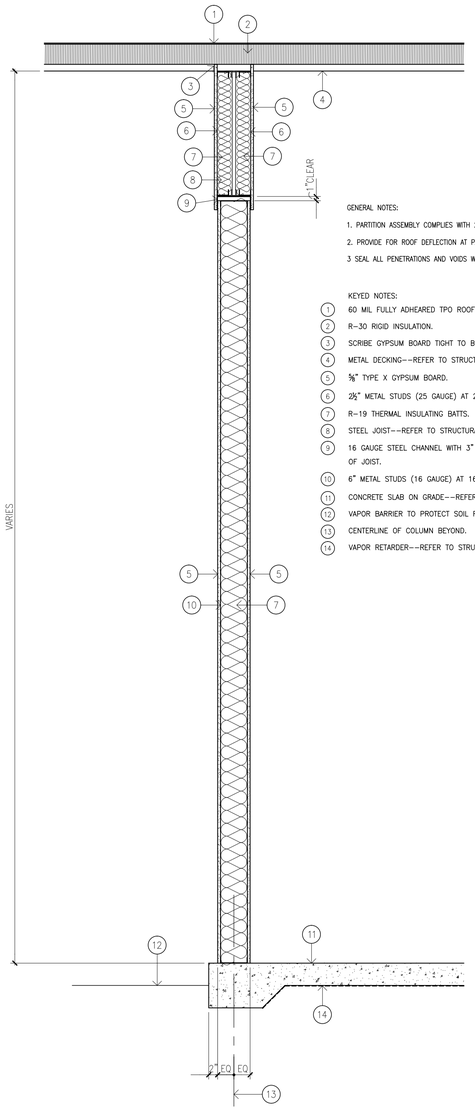

GENERAL NOTES:

1. PARTITION ASSEMBLY COMPLIES WITH 2015 IBC TABLE 721.1 (2) 13-1.3.
2. PROVIDE FOR ROOF DEFLECTION AT PARTITION TERMINATION AS INDICATED.
3 SEAL ALL PENETRATIONS AND VOIDS WITH 1 HOUR-RATED FIRE-RESISTANT SEALANT.

KEYED NOTES:

1. 60 MIL FULLY ADHEARED TPO ROOF MEMBRANE.
2. R-30 RIGID INSULATION.
3. SCRIBE GYPSUM BOARD TIGHT TO BOTTOM OF METAL DECK.
4. METAL DECKING--REFER TO STRUCTURAL ENGINEERING DRAWINGS.
5. ⅝" TYPE X GYPSUM BOARD.
6. 2½" METAL STUDS (25 GAUGE) AT 24" ON CENTER MAXIMUM.
7. R-19 THERMAL INSULATING BATTS.
8. STEEL JOIST--REFER TO STRUCTURAL ENGINEERING DRAWINGS.
9. 16 GAUGE STEEL CHANNEL WITH 3" DEEP LEGS--ATTACH TO BOTTOM CHORD OF JOIST.
10. 6" METAL STUDS (16 GAUGE) AT 16" ON CENTER MAXIMUM.
11. CONCRETE SLAB ON GRADE--REFER TO STRUCTURAL ENGINEERING DRAWINGS.
12. VAPOR BARRIER TO PROTECT SOIL FROM DRYING.
13. CENTERLINE OF COLUMN BEYOND.
14. VAPOR RETARDER--REFER TO STRUCTURAL ENGINEERING DRAWINGS.

19 SECTION SCALE : 3/4"=1'-0"

KEYED NOTES:

1. ¾" X ¼" GALVANIZED STEEL BAR.
2. CONCRETE WALK--REFER TO CIVIL ENGINEERING DRAWINGS.
3. SEALANT.
4. ¼" COUNTERSUNK SCREW AT 12" ON CENTER MAXIMUM.
5. 2" X 2" X ¼" GALVANIZED STEEL ANGLE.
6. #3 BENT BARS WELDED TO ANGLE AT 18" ON CENTER MAXIMUM.
7. DOWNSPOUT BOOT OUTLET BEYOND.
8. EXPANSION JOINT.
9. 6" X 6" W2.9 X W2.9 WELDED WIRE MESH.
10. CONCRETE TROUGH--MATCH SIDEWALK CONSTRUCTION.
11. ¼" GALVANIZED CHECKERED STEEL PLATE.

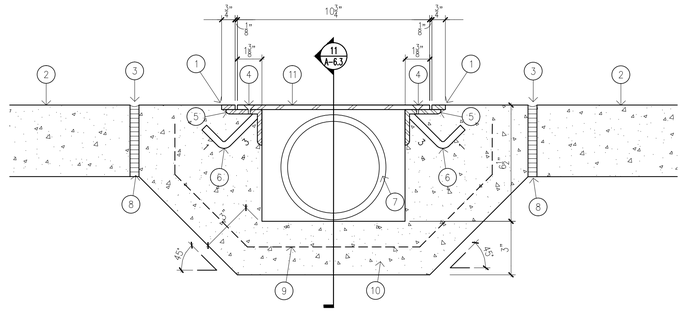

09 SECTION SCALE : 3"=1'-0"

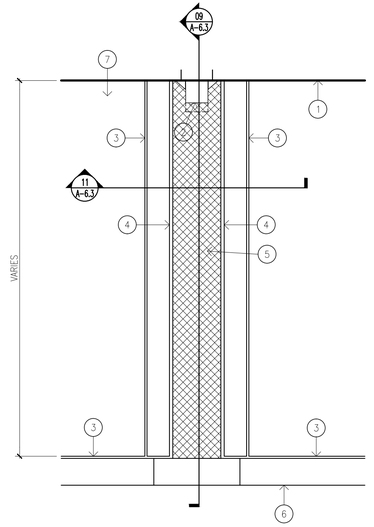

GENERAL NOTES:

1. REFER TO 19/A-1.0 FOR DOWNSPOUT TRENCH CONFIGURATIONS.

KEYED NOTES:

1. LINE OF EXTERIOR WALL.
2. CAST IRON DOWNSPOUT BOOT WITH OUTLET BELOW.
3. EXPANSION JOINT.
4. GALVANIZED STEEL FRAME.
5. GALVANIZED CHECKERED STEEL PLATE--CENTER ON AND SCRIBE AROUND DOWNSPOUT BOOT.
6. CONCRETE CURB--REFER TO CIVIL ENGINEERING DRAWINGS.
7. CONCRETE WALK--REFER TO CIVIL ENGINEERING DRAWINGS.

11 PLAN SCALE : 3/4"=1'-0"

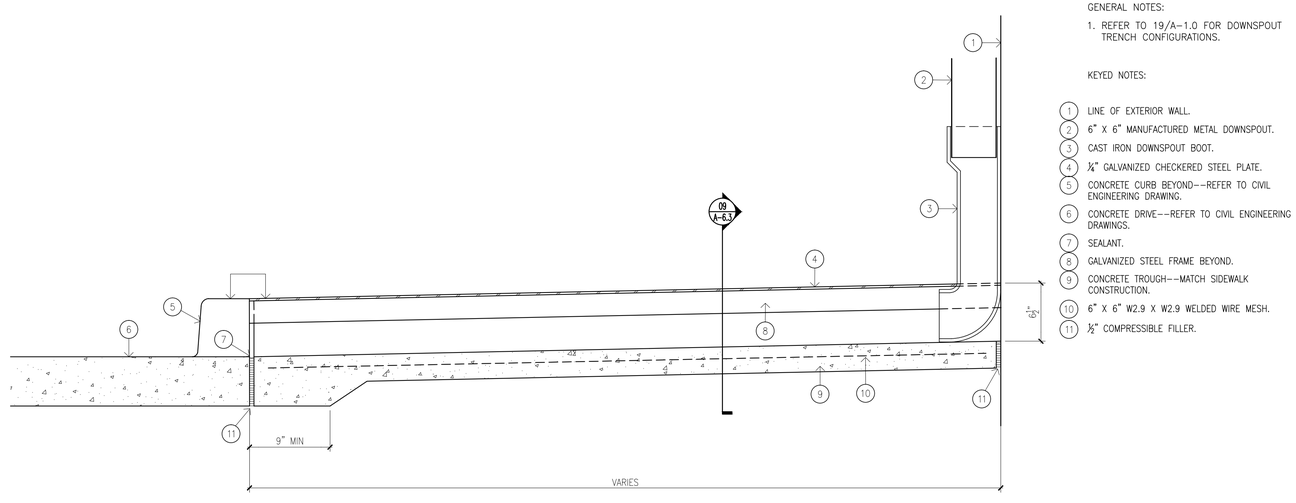

GENERAL NOTES:

1. REFER TO 19/A-1.0 FOR DOWNSPOUT TRENCH CONFIGURATIONS.

KEYED NOTES:

1. LINE OF EXTERIOR WALL.
2. 6" X 6" MANUFACTURED METAL DOWNSPOUT.
3. CAST IRON DOWNSPOUT BOOT.
4. ¼" GALVANIZED CHECKERED STEEL PLATE.
5. CONCRETE CURB BEYOND--REFER TO CIVIL ENGINEERING DRAWING.
6. CONCRETE DRIVE--REFER TO CIVIL ENGINEERING DRAWINGS.
7. SEALANT.
8. GALVANIZED STEEL FRAME BEYOND.
9. CONCRETE TROUGH--MATCH SIDEWALK CONSTRUCTION.
10. 6" X 6" W2.9 X W2.9 WELDED WIRE MESH.
11. ½" COMPRESSIBLE FILLER.

21 SECTION SCALE : 1 1/2"=1'-0"

REVISIONS

2 7-1-20

TENANT REVISIONS

SHELL ONLY

THE SHOPS AT LUCAS

LUCAS, TEXAS 75002

2650 WEST LUCAS ROAD

DONALD F. SOPRANZI AIA, LEED-AP ARCHITECT

10300 N Central Expressway
Suite 450 Dallas, Texas 75231
Telephone: 817-903-6663
dons@dfsarchitect.com

Signature 6-1-20

Sealed 6-1-20

Date

Scale

Drawn DS, RA

Job 2020-006 2

A-6.3

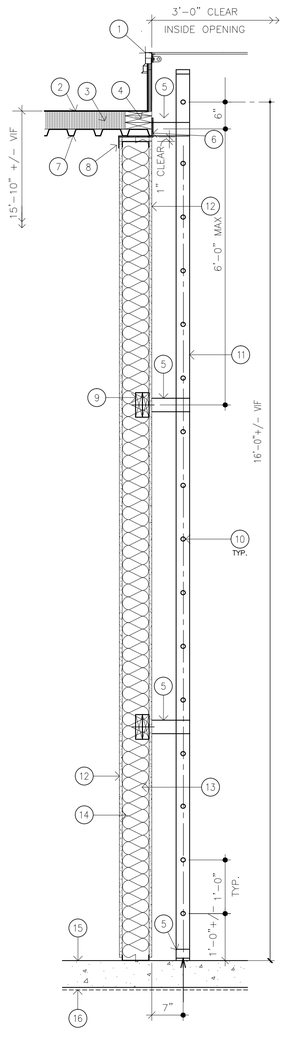

GENERAL NOTES:

1. PARTITION ASSEMBLY COMPLIES WITH 2015 IBC TABLE 721.1 (2) 13-1.3.
2. PROVIDE FOR ROOF DEFLECTION AT PARTITION TERMINATION AS INDICATED.
3. SEAL ALL PENETRATIONS AND VOIDS WITH 1 HOUR-RATED FIRE-RESISTANT SEALANT.

KEYED NOTES:

1. ROOF HATCH.
2. TPO ROOF MEMBRANE -- EXTEND UP ROOF HATCH CURB.
3. R-30 RIGID INSULATION.
4. 2X WOOD NAILERS.
5. LADDER MOUNTING BRACKET.
6. STEEL BENT PLATE AT OPENING PERIMETER -- REFER TO STRUCTURAL ENGINEERING DRAWINGS.
7. METAL ROOF DECKING -- REFER TO STRUCTURAL ENGINEERING DRAWINGS.
8. 16 GAUGE STEEL CHANNEL WITH 3" DEEP LEGS -- ATTACH TO METAL DECKING ABOVE.
9. 2X WOOD BLOCKING BETWEEN DOUBLE JAMB STUDS EACH SIDE AS REQUIRED TO SUPPORT LADDER MOUNTING BRACKET.
10. LADDER RUNG.
11. 1'-6" WIDE STEEL ROOF ACCESS LADDER WITH COMPONENTS AS NOTED.
12. 5/8" TYPE X GYPSUM BOARD.
13. R-19 THERMAL INSULATING BATTS.
14. 6" METAL STUDS (16 GAUGE) AT 16" ON CENTER MAXIMUM.
15. CONCRETE SLAB ON GRADE -- REFER TO STRUCTURAL ENGINEERING DRAWINGS.
16. VAPOR RETARDER--REFER TO STRUCTURAL ENGINEERING DRAWINGS.

19 DETAIL SCALE : 3/4"=1'-0"

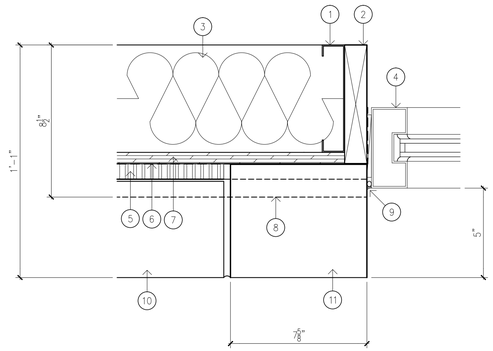

09 ENLARGED DETAIL SCALE : 3"=1'-0"

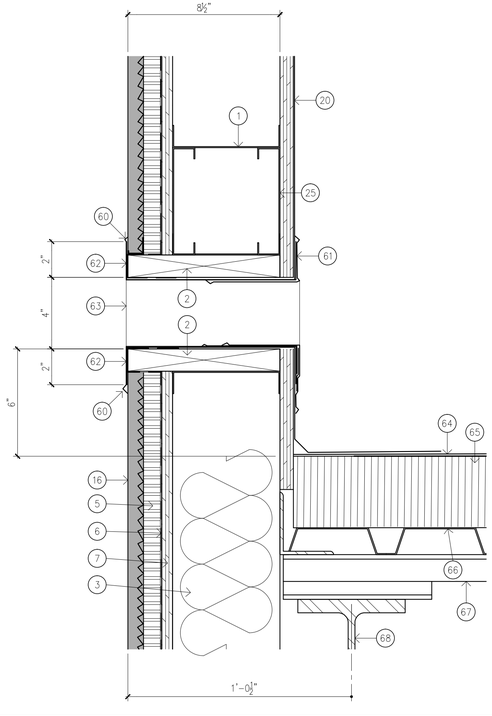

21 ENLARGED DETAIL SCALE : 3"=1'-0"

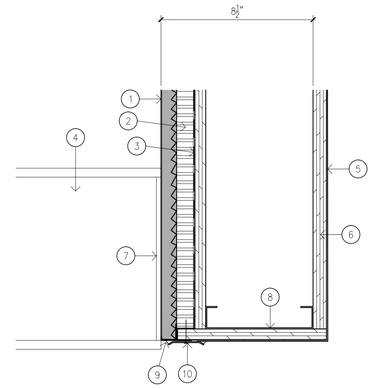

11 ENLARGED DETAIL SCALE : 3"=1'-0"

GENERAL NOTES:

1. NOT ALL KEYED NOTES APPLY TO ALL ENLARGED DETAILS.

KEYED NOTES:

1. 6" METAL STUDS (16 GAUGE) AT 16" ON CENTER MAXIMUM.
2. 2 X WOOD BLOCKING CUT TO FIT.
3. R-19 THERMAL INSULATING BATTS.
4. ALUMINUM STOREFRONT FRAMING SYSTEM WITH 1" INSULATING GLASS ASSEMBLIES.
5. R-5 RIGID INSULATION.
6. WEATHER-RESISTIVE BARRIER--WRAP AROUND WOOD BLOCKING AND TERMINATE WITH SELF-ADHERED FLASHING.
7. ⅝" OSB SHEATHING.
8. ⅞" STUCCO VENEER ABOVE (OMITTED FOR CLARITY).
9. BACKER ROD AND SEALANT.
10. CAST STONE COPING.
11. CAST STONE COPING END UNIT.
12. MANUFACTURED METAL COPING WITH CONTINUOUS CLEAT.
13. ¾" OSB SHEATHING.
14. 2 X 4 WOOD BLOCKING.
15. 4" METAL STUDS (16 GAUGE) AT 16" ON CENTER MAXIMUM FOR MISCELANIOUS CORNICE FRAMING.
16. ⅞" STUCCO VENEER ON METAL LATH.
17. WEATHER-RESISTIVE BARRIER.
18. DRAINAGE CASING.
19. WOOD BLOCKING AS REQUIRED.
20. 60 MIL TPO ROOF MEMBRANE--WRAP AROUND TOP OF PARAPET AS INDICATED.
21. STUCCO VENEER RETURN BEYOND.
22. 2 X 6 WOOD BLOCKING.
23. HORIZONTAL METAL STUCCO REVEAL.
24. STEEL COLUMN BEYOND--REFER TO STRUCTURAL ENGINEERING DRAWINGS.
25. 2 X 6 METAL STUD BOX BEAM HEADER (16 GAUGE).
26. BRICK VENEER WITH METAL WALL TIES.
27. METAL TERMINATION BAR AND SEALANT.
28. CAVITY DRAINAGE MATERIAL.
29. 12" WIDE SELF-ADHERING FLEXIBLE BASE FLASHING.
30. WEATHER-RESISTIVE BARRIER--EXTEND DOWN TO LEDGE FORMED BY FOUNDATION AND SEAL.
31. CONCRETE CONTROL JOINT--REFER TO CIVIL ENGINEERING DRAWINGS.
32. ⅜" WIDE METAL DRIP EDGE SET IN A CONTINUOUS BEAD OF SEALANT.
33. CONCRETE SLAB ON GRADE--REFER TO STRUCTURAL ENGINEERING DRAWINGS.
34. ½" COMPRESSIBLE FILLER WITH SEALED TOP.
35. CONCRETE GRADE BEAM--REFER TO STRUCTURAL ENGINEERING DRAWINGS.
36. VAPOR RETARDER--REFER TO STRUCTURAL ENGINEERING DRAWINGS.
37. 60 MIL TPO ROOF MEMBRANE--WRAP AROUND BOTTOM OF PARAPET OPENING AS INDICATED.
38. MANUFACTURED METAL COPING BEYOND.
39. 2 X 8 METAL BOX BEAM HEADER (16 GAUGE).
40. METAL COUNTERFLASHING AND SEALANT.
41. LINE OF PARAPET BEYOND.
42. LINE OF EXTERIOR WALL BEYOND.
43. LINE OF WOOD BLOCKING BEYOND.
44. STEEL LINEL ANGLE--REFER TO STRUCTURAL ENGINEERING DRAWINGS.
45. BRICK VENEER RETURN BEYOND.
46. ALUMINUM DRIVE-UP WINDOW ASSEMBLY.
47. OPEN-SIDED FABRIC AWNING BEYOND.
48. WOOD BLOCKING AS REQUIRED FOR CANOPY SUPPORT.
49. PRE-ENGINEERED ALUMINUM CANOPY.
50. METAL SILL FLASHING AT CANOPY.
51. 1 X WOOD BLOCKING CUT TO FIT.
52. CONCRETE WALK--REFER TO CIVIL ENGINEERING DRAWINGS.
53. 1½" WIDE METAL DRIP EDGE SET IN CONTINUOUS BEAD OF SEALANT.
54. HOLLOW METAL DOOR AND FRAME.
55. ⅝" TYPE X GYPSUM BOARD--TAPE AND BED JOINTS ONLY.
56. GYPSUM BOARD RETURN BEYOND.
57. SEALANT TAPE.
58. OPEN-SIDED FABRIC AWNING.
59. RECESSED LED ACCENT LIGHT FIXTURE (TYPE A)--REFER TO ELECTRICAL ENGINEERING DRAWINGS.
60. SEALANT.
61. TPO FLASHING LAYERS WITH TPO SEALANT AS INDICATED.
62. PRE-FINISHED METAL SCUPPER FLANGE AT OPENING PERIMETER.
63. PRE-FINISHED METAL SCUPPER SLEEVE.
64. 60 MIL FULLY ADHERED TPO ROOF MEMBRANE.
65. R-30 RIGID INSULATION.
66. METAL DECKING--REFER TO STRUCTURAL ENGINEERING DRAWINGS.
67. STEEL JOISTS--REFER TO STRUCTURAL ENGINEERING DRAWINGS.
68. STEEL BEAM--REFER TO STRUCTURAL ENGINEERING DRAWINGS.
69. STEEL COLUMN--REFER TO STRUCTURAL ENGINEERING DRAWINGS.
70. STUCCO VENEER SILL BELOW.
71. RECESSED WATERPROOF DUPLEX RECEPTACLE--REFER TO ELECTRICAL ENGINEERING DRAWINGS.
72. 4" METAL STUDS (16 GAUGE) AT 16" ON CENTER MAXIMUM.
73. WIND BRACING--REFER TO STRUCTURAL ENGINEERING DRAWINGS.
74. ALUMINUM ENTRANCE SYSTEM WITH 1" INSULATING GLASS ASSEMBLIES.
75. ALUMINUM THRESHOLD BELOW.

23 ENLARGED DETAIL NOTES

REVISIONS

SHELL ONLY

THE SHOPS AT LUCAS

LUCAS, TEXAS 75002

2650 WEST LUCAS ROAD

DONALD F. SOPRANZI AIA, LEED-AP ARCHITECT

10300 N Central Expressway
Suite 450 Dallas, Texas 75231
Telephone: 817-903-6663
dons@dfsarchitect.com

Signature 6-1-20

Sealed 6-1-20

Date

Scale

Drawn DS, RA

Job 2020-006

A-7.0

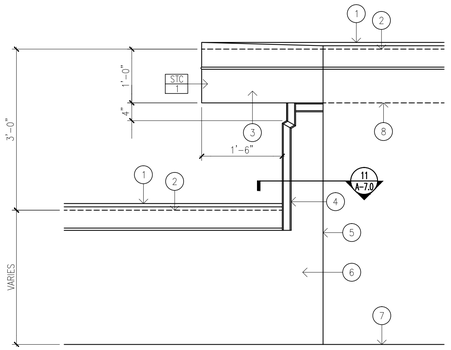

KEYED NOTES:

1. MANUFACTURED METAL COPING.
2. LINE OF SHEATHING BEYOND.
3. STUCCO VENEER.
4. TPO METAL VERTICAL AND HORIZONTAL TERMINATION BARS AT TPO TO STUCCO TRANSITION.
5. OUTSIDE CORNER.
6. TPO PARAPET MEMBRANE.
7. TPO ROOF MEMBRANE.
8. LINE OF CORNICE SOFFIT BEYOND.

07 PARTIAL ELEVATION SCALE : 3/4"=1'-0"

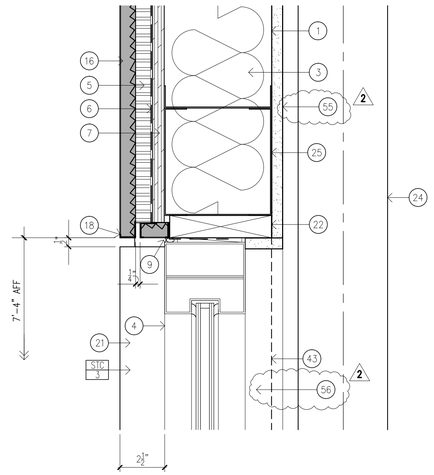

09 ENLARGED DETAIL SCALE : 3"=1'-0"

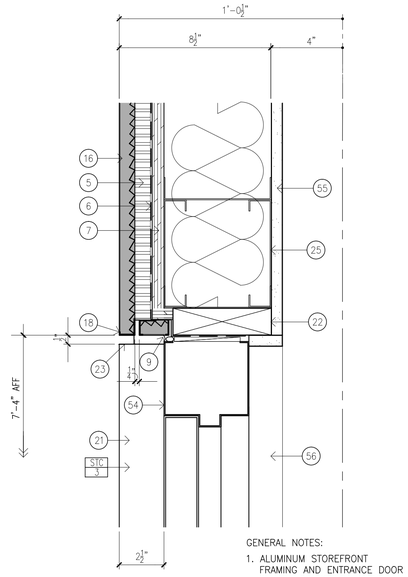

GENERAL NOTES:

1. ALUMINUM STOREFRONT FRAMING AND ENTRANCE DOOR IN LIEU OF HOLLOW METAL DOOR AND FRAME AT SIMILAR CONDITION 'B'.

11 ENLARGED DETAIL SCALE : 3"=1'-0"

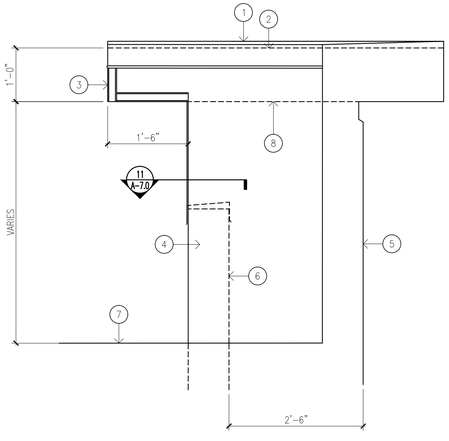

KEYED NOTES:

1. MANUFACTURED METAL COPING.
2. LINE OF SHEATHING BEYOND.
3. TPO METAL VERTICAL AND HORIZONTAL TERMINATION BARS AT TPO TO STUCCO TRANSITION.
4. TPO PARAPET MEMBRANE.
5. PROFILE OF EXTERIOR WALL.
6. LINE OF PARAPET BEYOND.
7. TPO ROOF MEMBRANE.
8. LINE OF CORNICE SOFFIT BEYOND.

19 PARTIAL ELEVATION SCALE : 3/4"=1'-0"

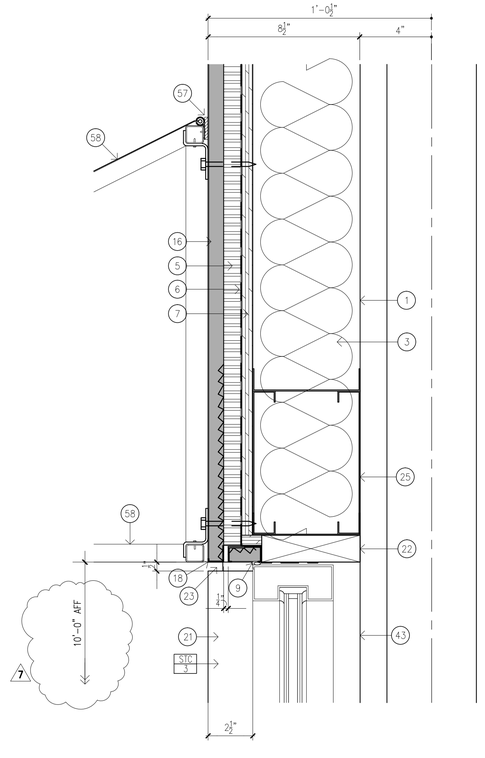

21 ENLARGED DETAIL SCALE : 3"=1'-0"

GENERAL NOTES:

1. NOT ALL KEYED NOTES APPLY TO ALL ENLARGED DETAILS.

KEYED NOTES:

1. 6" METAL STUDS (16 GAUGE) AT 16" ON CENTER MAXIMUM.
2. 2 X WOOD BLOCKING CUT TO FIT.
3. R-19 THERMAL INSULATING BATTS.
4. ALUMINUM STOREFRONT FRAMING SYSTEM WITH 1" INSULATING GLASS ASSEMBLIES.
5. R-5 RIGID INSULATION.
6. WEATHER-RESISTIVE BARRIER--WRAP AROUND WOOD BLOCKING AND TERMINATE WITH SELF-ADHERED FLASHING.
7. 5/8" OSB SHEATHING.
8. 7/8" STUCCO VENEER ABOVE (OMITTED FOR CLARITY).
9. BACKER ROD AND SEALANT.
10. CAST STONE COPING.
11. CAST STONE COPING END UNIT.
12. MANUFACTURED METAL COPING WITH CONTINUOUS CLEAT.
13. 3/4" OSB SHEATHING.
14. 2 X 4 WOOD BLOCKING.
15. 4" METAL STUDS (16 GAUGE) AT 16" ON CENTER MAXIMUM FOR MISCELANIOUS CORNICE FRAMING.
16. 7/8" STUCCO VENEER ON METAL LATH.
17. WEATHER-RESISTIVE BARRIER.
18. DRAINAGE CASING.
19. WOOD BLOCKING AS REQUIRED.
20. 60 MIL TPO ROOF MEMBRANE--WRAP AROUND TOP OF PARAPET AS INDICATED.
21. STUCCO VENEER RETURN BEYOND.
22. 2 X 6 WOOD BLOCKING.
23. HORIZONTAL METAL STUCCO REVEAL.
24. STEEL COLUMN BEYOND--REFER TO STRUCTURAL ENGINEERING DRAWINGS.
25. 2 X 6 METAL STUD BOX BEAM HEADER (16 GAUGE).
26. BRICK VENEER WITH METAL WALL TIES.
27. METAL TERMINATION BAR AND SEALANT.
28. CAVITY DRAINAGE MATERIAL.
29. 12" WIDE SELF-ADHERING FLEXIBLE BASE FLASHING.
30. WEATHER-RESISTIVE BARRIER--EXTEND DOWN TO LEDGE FORMED BY FOUNDATION AND SEAL.
31. CONCRETE CONTROL JOINT--REFER TO CIVIL ENGINEERING DRAWINGS.
32. 3/8" WIDE METAL DRIP EDGE SET IN A CONTINUOUS BEAD OF SEALANT.
33. CONCRETE SLAB ON GRADE--REFER TO STRUCTURAL ENGINEERING DRAWINGS.
34. 1/2" COMPRESSIBLE FILLER WITH SEALED TOP.
35. CONCRETE GRADE BEAM--REFER TO STRUCTURAL ENGINEERING DRAWINGS.
36. VAPOR RETARDER--REFER TO STRUCTURAL ENGINEERING DRAWINGS.
37. 60 MIL TPO ROOF MEMBRANE--WRAP AROUND BOTTOM OF PARAPET OPENING AS INDICATED.
38. MANUFACTURED METAL COPING BEYOND.
39. 2 X 8 METAL BOX BEAM HEADER (16 GAUGE).
40. METAL COUNTERFLASHING AND SEALANT.
41. LINE OF PARAPET BEYOND.
42. LINE OF EXTERIOR WALL BEYOND.
43. LINE OF WOOD BLOCKING BEYOND.
44. STEEL LINEL ANGLE--REFER TO STRUCTURAL ENGINEERING DRAWINGS.
45. BRICK VENEER RETURN BEYOND.
46. ALUMINUM DRIVE-UP WINDOW ASSEMBLY.
47. OPEN-SIDED FABRIC AWNING BEYOND.
48. WOOD BLOCKING AS REQUIRED FOR CANOPY SUPPORT.
49. PRE-ENGINEERED ALUMINUM CANOPY.
50. METAL SILL FLASHING AT CANOPY.
51. 1 X WOOD BLOCKING CUT TO FIT.
52. CONCRETE WALK--REFER TO CIVIL ENGINEERING DRAWINGS.
53. 1/2" WIDE METAL DRIP EDGE SET IN CONTINUOUS BEAD OF SEALANT.
54. HOLLOW METAL DOOR AND FRAME.
55. 5/8" TYPE X GYPSUM BOARD--TAPE AND BED JOINTS ONLY.
56. GYPSUM BOARD RETURN BEYOND.
57. SEALANT TAPE.
58. OPEN-SIDED FABRIC AWNING.
59. RECESSED LED ACCENT LIGHT FIXTURE (TYPE A)--REFER TO ELECTRICAL ENGINEERING DRAWINGS.
60. SEALANT.
61. TPO FLASHING LAYERS WITH TPO SEALANT AS INDICATED.
62. PRE-FINISHED METAL SCUPPER FLANGE AT OPENING PERIMETER.
63. PRE-FINISHED METAL SCUPPER SLEEVE.
64. 60 MIL FULLY ADHERED TPO ROOF MEMBRANE.
65. R-30 RIGID INSULATION.
66. METAL DECKING--REFER TO STRUCTURAL ENGINEERING DRAWINGS.
67. STEEL JOISTS--REFER TO STRUCTURAL ENGINEERING DRAWINGS.
68. STEEL BEAM--REFER TO STRUCTURAL ENGINEERING DRAWINGS.
69. STEEL COLUMN--REFER TO STRUCTURAL ENGINEERING DRAWINGS.
70. STUCCO VENEER SILL BELOW.
71. RECESSED WATERPROOF DUPLEX RECEPTACLE--REFER TO ELECTRICAL ENGINEERING DRAWINGS.
72. 4" METAL STUDS (16 GAUGE) AT 16" ON CENTER MAXIMUM.
73. WIND BRACING--REFER TO STRUCTURAL ENGINEERING DRAWINGS.
74. ALUMINUM ENTRANCE SYSTEM WITH 1" INSULATING GLASS ASSEMBLIES.
75. ALUMINUM THRESHOLD BELOW.

23 ENLARGED DETAIL NOTES

REVISIONS

2 7-1-20

TENANT REVISIONS

7 10-22-20

SHELL ONLY

THE SHOPS AT LUCAS

LUCAS, TEXAS 75002

2650 WEST LUCAS ROAD

10300 N Central Expressway
Suite 450 Dallas, Texas 75231
Telephone: 817-903-6663
dons@dfsarchitect.com

DONALD F. SOPRANZI AIA, LEED AP ARCHITECT

Signature 6-1-20

Sealed 6-1-20

Date

Scale

Drawn DS, RA

Job 2020-006

A-7.1

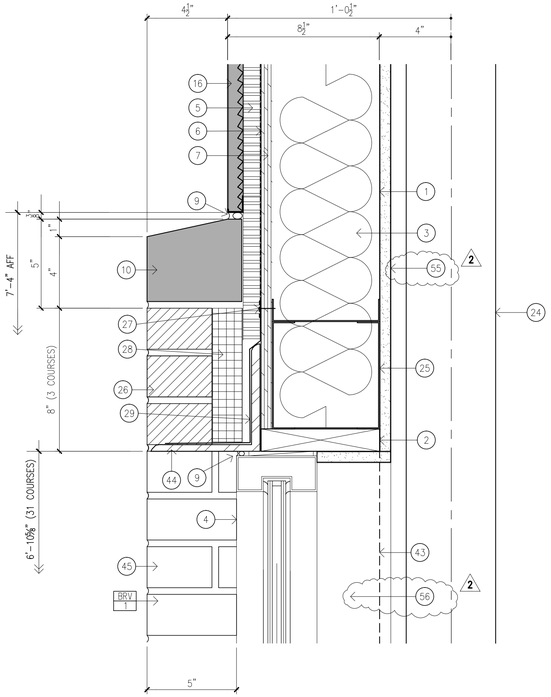

07 ENLARGED DETAIL SCALE : 3"=1'-0"

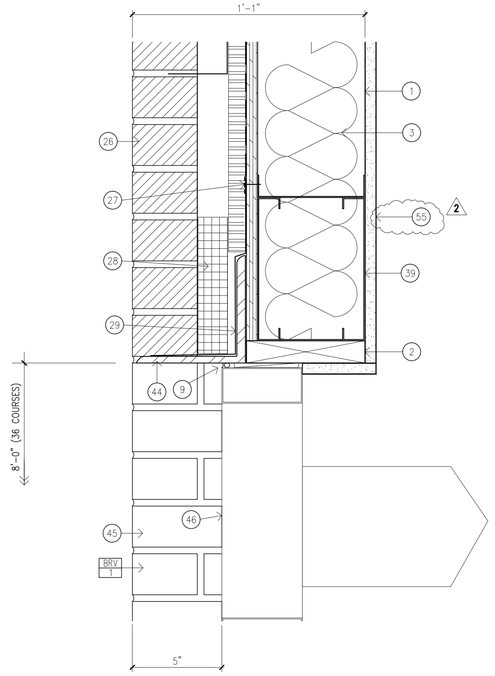

09 ENLARGED DETAIL SCALE : 3"=1'-0"

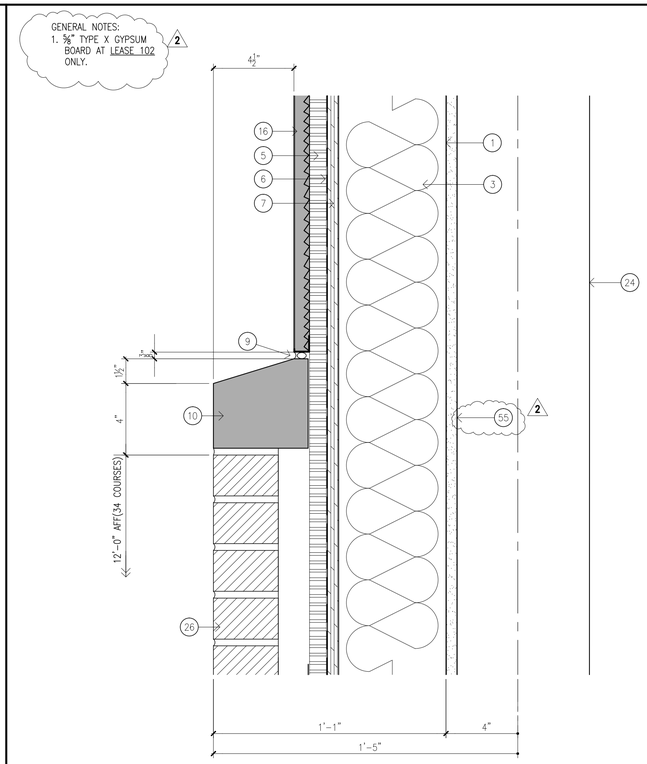

11 ENLARGED DETAIL SCALE : 3"=1'-0"

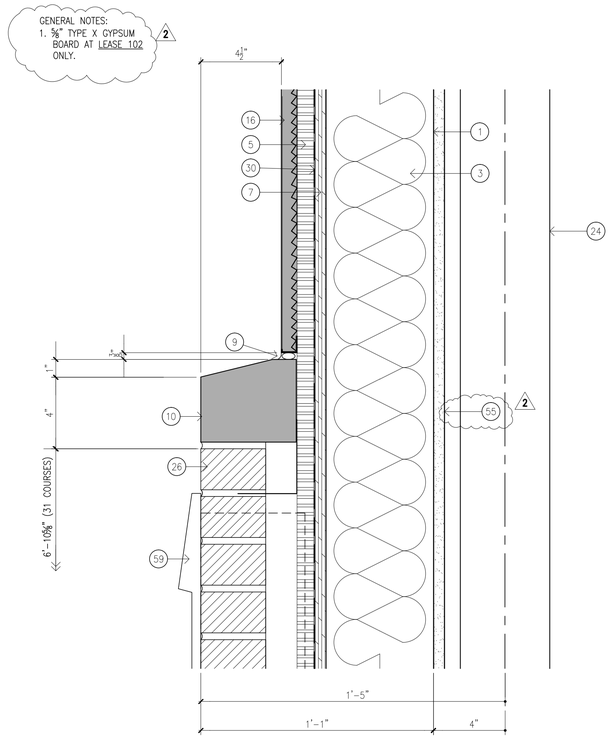

19 ENLARGED DETAIL SCALE : 3"=1'-0"

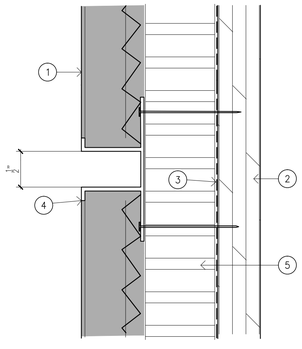

GENERAL NOTES:

1. VERTICAL CONTROL JOINTS ARE CONTINUOUS --HORIZONTAL CONTROL JOINTS BUTT INTO THE SIDE OF THE VERTICAL CONTROL JOINTS.

KEYED NOTES:

1. 7/8" STUCCO VENEER--ATTACH METAL LATH OVER REVEAL FLANGES.
2. 5/8" OSB SHEATHING.
3. WEATHER-RESISTIVE BARRIER.
4. METAL STUCCO REVEAL.
5. R-6.5 RIGID INSULATION.

21 ENLARGED DETAIL SCALE : FULL SIZE

GENERAL NOTES:

1. NOT ALL KEYED NOTES APPLY TO ALL ENLARGED DETAILS.

KEYED NOTES:

1. 6" METAL STUDS (16 GAUGE) AT 16" ON CENTER MAXIMUM.
2. 2 X WOOD BLOCKING CUT TO FIT.
3. R-19 THERMAL INSULATING BATTS.
4. ALUMINUM STOREFRONT FRAMING SYSTEM WITH 1" INSULATING GLASS ASSEMBLIES.
5. R-5 RIGID INSULATION.
6. WEATHER-RESISTIVE BARRIER--WRAP AROUND WOOD BLOCKING AND TERMINATE WITH SELF-ADHERED FLASHING.
7. 5/8" OSB SHEATHING.
8. 7/8" STUCCO VENEER ABOVE (OMITTED FOR CLARITY).
9. BACKER ROD AND SEALANT.
10. CAST STONE COPING.
11. CAST STONE COPING END UNIT.
12. MANUFACTURED METAL COPING WITH CONTINUOUS CLEAT.
13. 3/4" OSB SHEATHING.
14. 2 X 4 WOOD BLOCKING.
15. 4" METAL STUDS (16 GAUGE) AT 16" ON CENTER MAXIMUM FOR MISCELANIOUS CORNICE FRAMING.
16. 7/8" STUCCO VENEER ON METAL LATH.
17. WEATHER-RESISTIVE BARRIER.
18. DRAINAGE CASING.
19. WOOD BLOCKING AS REQUIRED.
20. 60 MIL TPO ROOF MEMBRANE--WRAP AROUND TOP OF PARAPET AS INDICATED.
21. STUCCO VENEER RETURN BEYOND.
22. 2 X 6 WOOD BLOCKING.
23. HORIZONTAL METAL STUCCO REVEAL.
24. STEEL COLUMN BEYOND--REFER TO STRUCTURAL ENGINEERING DRAWINGS.
25. 2 X 6 METAL STUD BOX BEAM HEADER (16 GAUGE).
26. BRICK VENEER WITH METAL WALL TIES.
27. METAL TERMINATION BAR AND SEALANT.
28. CAVITY DRAINAGE MATERIAL.
29. 12" WIDE SELF-ADHERING FLEXIBLE BASE FLASHING.
30. WEATHER-RESISTIVE BARRIER--EXTEND DOWN TO LEDGE FORMED BY FOUNDATION AND SEAL.
31. CONCRETE CONTROL JOINT--REFER TO CIVIL ENGINEERING DRAWINGS.
32. 3/8" WIDE METAL DRIP EDGE SET IN A CONTINUOUS BEAD OF SEALANT.
33. CONCRETE SLAB ON GRADE--REFER TO STRUCTURAL ENGINEERING DRAWINGS.
34. 1/2" COMPRESSIBLE FILLER WITH SEALED TOP.
35. CONCRETE GRADE BEAM--REFER TO STRUCTURAL ENGINEERING DRAWINGS.
36. VAPOR RETARDER--REFER TO STRUCTURAL ENGINEERING DRAWINGS.
37. 60 MIL TPO ROOF MEMBRANE--WRAP AROUND BOTTOM OF PARAPET OPENING AS INDICATED.
38. MANUFACTURED METAL COPING BEYOND.
39. 2 X 8 METAL BOX BEAM HEADER (16 GAUGE).
40. METAL COUNTERFLASHING AND SEALANT.
41. LINE OF PARAPET BEYOND.
42. LINE OF EXTERIOR WALL BEYOND.
43. LINE OF WOOD BLOCKING BEYOND.
44. STEEL LINEL ANGLE--REFER TO STRUCTURAL ENGINEERING DRAWINGS.
45. BRICK VENEER RETURN BEYOND.
46. ALUMINUM DRIVE-UP WINDOW ASSEMBLY.
47. OPEN-SIDED FABRIC AWNING BEYOND.
48. WOOD BLOCKING AS REQUIRED FOR CANOPY SUPPORT.
49. PRE-ENGINEERED ALUMINUM CANOPY.
50. METAL SILL FLASHING AT CANOPY.
51. 1 X WOOD BLOCKING CUT TO FIT.
52. CONCRETE WALK--REFER TO CIVIL ENGINEERING DRAWINGS.
53. 1/2" WIDE METAL DRIP EDGE SET IN CONTINUOUS BEAD OF SEALANT.
54. HOLLOW METAL DOOR AND FRAME.
55. 5/8" TYPE X GYPSUM BOARD--TAPE AND BED JOINTS ONLY.
56. GYPSUM BOARD RETURN BEYOND.
57. SEALANT TAPE.
58. OPEN-SIDED FABRIC AWNING.
59. RECESSED LED ACCENT LIGHT FIXTURE (TYPE A)--REFER TO ELECTRICAL ENGINEERING DRAWINGS.
60. SEALANT.
61. TPO FLASHING LAYERS WITH TPO SEALANT AS INDICATED.
62. PRE-FINISHED METAL SCUPPER FLANGE AT OPENING PERIMETER.
63. PRE-FINISHED METAL SCUPPER SLEEVE.
64. 60 MIL FULLY ADHERED TPO ROOF MEMBRANE.
65. R-30 RIGID INSULATION.
66. METAL DECKING--REFER TO STRUCTURAL ENGINEERING DRAWINGS.
67. STEEL JOISTS--REFER TO STRUCTURAL ENGINEERING DRAWINGS.
68. STEEL BEAM--REFER TO STRUCTURAL ENGINEERING DRAWINGS.
69. STEEL COLUMN--REFER TO STRUCTURAL ENGINEERING DRAWINGS.
70. STUCCO VENEER SILL BELOW.
71. RECESSED WATERPROOF DUPLEX RECEPTACLE--REFER TO ELECTRICAL ENGINEERING DRAWINGS.
72. 4" METAL STUDS (16 GAUGE) AT 16" ON CENTER MAXIMUM.
73. WIND BRACING--REFER TO STRUCTURAL ENGINEERING DRAWINGS.
74. ALUMINUM ENTRANCE SYSTEM WITH 1" INSULATING GLASS ASSEMBLIES.
75. ALUMINUM THRESHOLD BELOW.

23 ENLARGED DETAIL NOTES

REVISIONS

2 7-1-20

TENANT REVISIONS

SHELL ONLY

THE SHOPS AT LUCAS

LUCAS, TEXAS 75002

2650 WEST LUCAS ROAD

10300 N Central Expressway
Suite 450 Dallas, Texas 75231
Telephone: 817-903-6663
dons@dfsarchitect.com

DONALD F. SOPRANZI, AM, LEED AP ARCHITECT

Signature 6-1-20

Sealed 6-1-20

Date

Scale

Drawn DS, RA

Job 2020-006

A-7.2

GENERAL NOTES:

1. ⅝" TYPE X GYPSUM BOARD AT LEASE 102 ONLY.

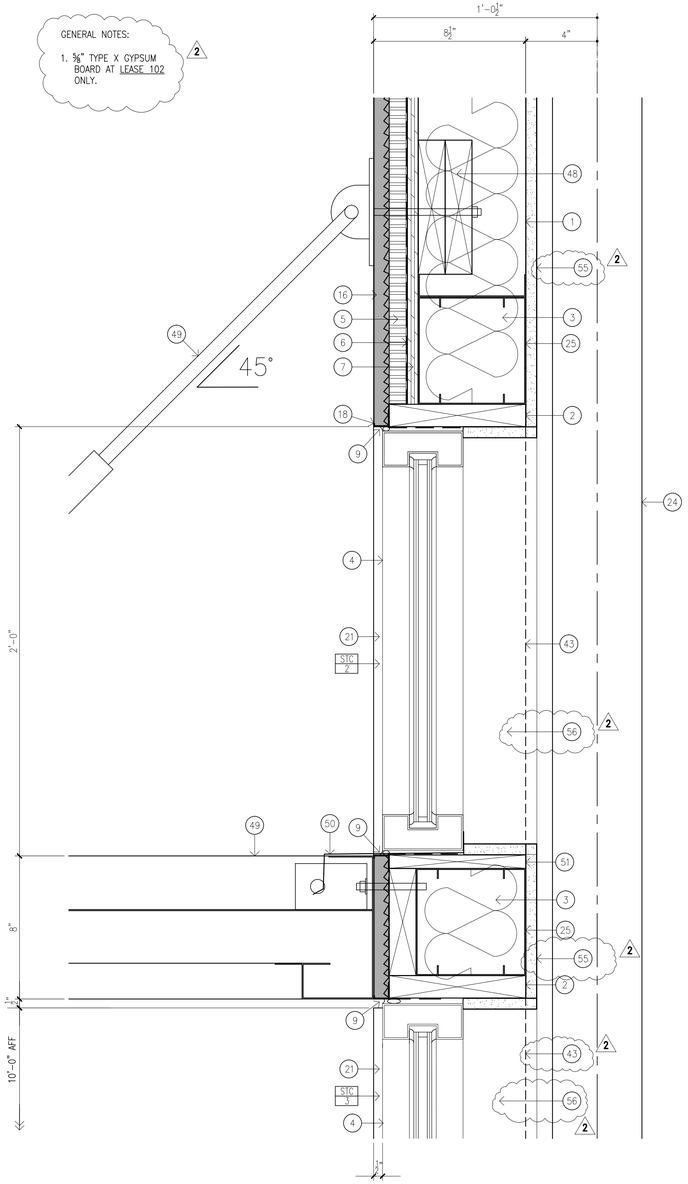

19 ENLARGED DETAIL SCALE : 3"=1'-0"

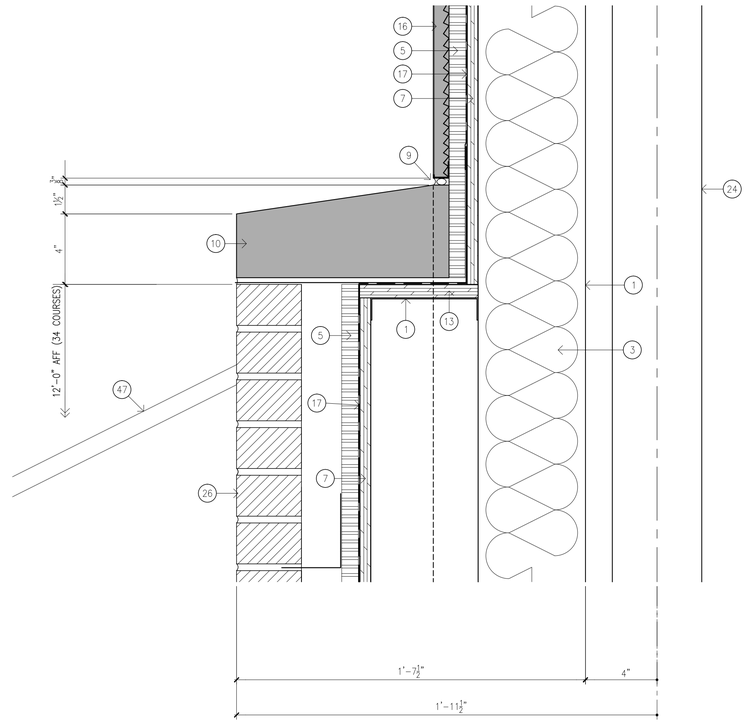

09 ENLARGED DETAIL SCALE : 3"=1'-0"

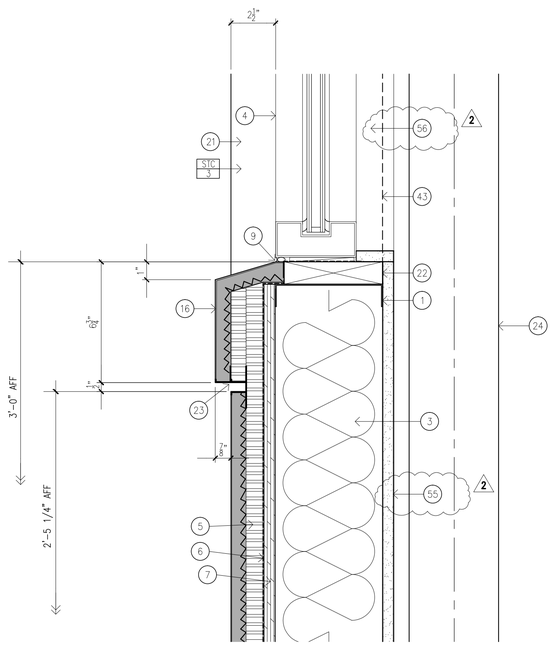

21 ENLARGED DETAIL SCALE : 3"=1'-0"

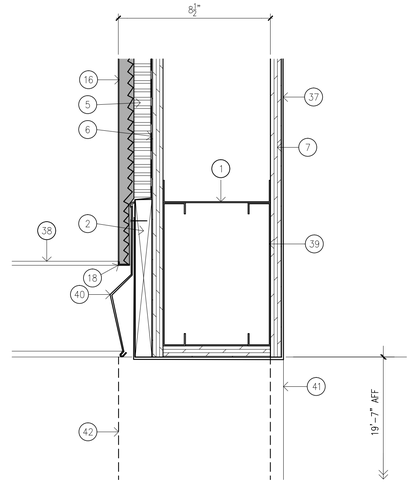

11 ENLARGED DETAIL SCALE : 3"=1'-0"

GENERAL NOTES:

1. NOT ALL KEYED NOTES APPLY TO ALL ENLARGED DETAILS.

KEYED NOTES:

1. 6" METAL STUDS (16 GAUGE) AT 16" ON CENTER MAXIMUM.
2. 2 X WOOD BLOCKING CUT TO FIT.
3. R-19 THERMAL INSULATING BATTS.
4. ALUMINUM STOREFRONT FRAMING SYSTEM WITH 1" INSULATING GLASS ASSEMBLIES.
5. R-5 RIGID INSULATION.
6. WEATHER-RESISTIVE BARRIER--WRAP AROUND WOOD BLOCKING AND TERMINATE WITH SELF-ADHERED FLASHING.
7. ⅞" OSB SHEATHING.
8. ⅞" STUCCO VENEER ABOVE (OMITTED FOR CLARITY).
9. BACKER ROD AND SEALANT.
10. CAST STONE COPING.
11. CAST STONE COPING END UNIT.
12. MANUFACTURED METAL COPING WITH CONTINUOUS CLEAT.
13. ¾" OSB SHEATHING.
14. 2 X 4 WOOD BLOCKING.
15. 4" METAL STUDS (16 GAUGE) AT 16" ON CENTER MAXIMUM FOR MISCELANIOUS CORNICE FRAMING.
16. ⅞" STUCCO VENEER ON METAL LATH.
17. WEATHER-RESISTIVE BARRIER.
18. DRAINAGE CASING.
19. WOOD BLOCKING AS REQUIRED.
20. 60 MIL TPO ROOF MEMBRANE--WRAP AROUND TOP OF PARAPET AS INDICATED.
21. STUCCO VENEER RETURN BEYOND.
22. 2 X 6 WOOD BLOCKING.
23. HORIZONTAL METAL STUCCO REVEAL.
24. STEEL COLUMN BEYOND--REFER TO STRUCTURAL ENGINEERING DRAWINGS.
25. 2 X 6 METAL STUD BOX BEAM HEADER (16 GAUGE).
26. BRICK VENEER WITH METAL WALL TIES.
27. METAL TERMINATION BAR AND SEALANT.
28. CAVITY DRAINAGE MATERIAL.
29. 12" WIDE SELF-ADHERING FLEXIBLE BASE FLASHING.
30. WEATHER-RESISTIVE BARRIER--EXTEND DOWN TO LEDGE FORMED BY FOUNDATION AND SEAL.
31. CONCRETE CONTROL JOINT--REFER TO CIVIL ENGINEERING DRAWINGS.
32. ⅝" WIDE METAL DRIP EDGE SET IN A CONTINUOUS BEAD OF SEALANT.
33. CONCRETE SLAB ON GRADE--REFER TO STRUCTURAL ENGINEERING DRAWINGS.
34. ½" COMPRESSIBLE FILLER WITH SEALED TOP.
35. CONCRETE GRADE BEAM--REFER TO STRUCTURAL ENGINEERING DRAWINGS.
36. VAPOR RETARDER--REFER TO STRUCTURAL ENGINEERING DRAWINGS.
37. 60 MIL TPO ROOF MEMBRANE--WRAP AROUND BOTTOM OF PARAPET OPENING AS INDICATED.
38. MANUFACTURED METAL COPING BEYOND.
39. 2 X 8 METAL BOX BEAM HEADER (16 GAUGE).
40. METAL COUNTERFLASHING AND SEALANT.
41. LINE OF PARAPET BEYOND.
42. LINE OF EXTERIOR WALL BEYOND.
43. LINE OF WOOD BLOCKING BEYOND.
44. STEEL LINEL ANGLE--REFER TO STRUCTURAL ENGINEERING DRAWINGS.
45. BRICK VENEER RETURN BEYOND.
46. ALUMINUM DRIVE-UP WINDOW ASSEMBLY.
47. OPEN-SIDED FABRIC AWNING BEYOND.
48. WOOD BLOCKING AS REQUIRED FOR CANOPY SUPPORT.
49. PRE-ENGINEERED ALUMINUM CANOPY.
50. METAL SILL FLASHING AT CANOPY.
51. 1 X WOOD BLOCKING CUT TO FIT.
52. CONCRETE WALK--REFER TO CIVIL ENGINEERING DRAWINGS.
53. 1½" WIDE METAL DRIP EDGE SET IN CONTINUOUS BEAD OF SEALANT.
54. HOLLOW METAL DOOR AND FRAME.
55. ⅝" TYPE X GYPSUM BOARD--TAPE AND BED JOINTS ONLY.
56. GYPSUM BOARD RETURN BEYOND.
57. SEALANT TAPE.
58. OPEN-SIDED FABRIC AWNING.
59. RECESSED LED ACCENT LIGHT FIXTURE (TYPE A)--REFER TO ELECTRICAL ENGINEERING DRAWINGS.
60. SEALANT.
61. TPO FLASHING LAYERS WITH TPO SEALANT AS INDICATED.
62. PRE-FINISHED METAL SCUPPER FLANGE AT OPENING PERIMETER.
63. PRE-FINISHED METAL SCUPPER SLEEVE.
64. 60 MIL FULLY ADHERED TPO ROOF MEMBRANE.
65. R-30 RIGID INSULATION.
66. METAL DECKING--REFER TO STRUCTURAL ENGINEERING DRAWINGS.
67. STEEL JOISTS--REFER TO STRUCTURAL ENGINEERING DRAWINGS.
68. STEEL BEAM--REFER TO STRUCTURAL ENGINEERING DRAWINGS.
69. STEEL COLUMN--REFER TO STRUCTURAL ENGINEERING DRAWINGS.
70. STUCCO VENEER SILL BELOW.
71. RECESSED WATERPROOF DUPLEX RECEPTACLE--REFER TO ELECTRICAL ENGINEERING DRAWINGS.
72. 4" METAL STUDS (16 GAUGE) AT 16" ON CENTER MAXIMUM.
73. WIND BRACING--REFER TO STRUCTURAL ENGINEERING DRAWINGS.
74. ALUMINUM ENTRANCE SYSTEM WITH 1" INSULATING GLASS ASSEMBLIES.
75. ALUMINUM THRESHOLD BELOW.

23 ENLARGED DETAIL NOTES

REVISIONS

2 7-1-20

TENANT REVISIONS

SHELL ONLY

THE SHOPS AT LUCAS

LUCAS, TEXAS 75002

2650 WEST LUCAS ROAD

DONALD F. SOPRANZI AIA, LEED AP ARCHITECT
10300 N Central Expressway
Suite 450 Dallas, Texas 75231
Telephone: 817-903-6663
dons@dfsarchitect.com

Signature 6-1-20

Sealed 6-1-20

Date

Scale

Drawn DS, RA

Job 2020-006

A-7.3

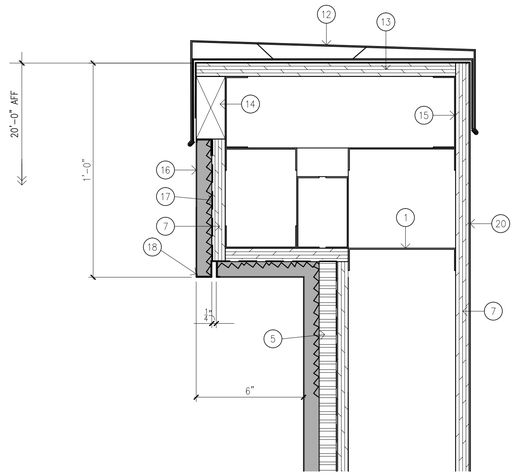

07 ENLARGED DETAIL SCALE : 3"=1'-0"

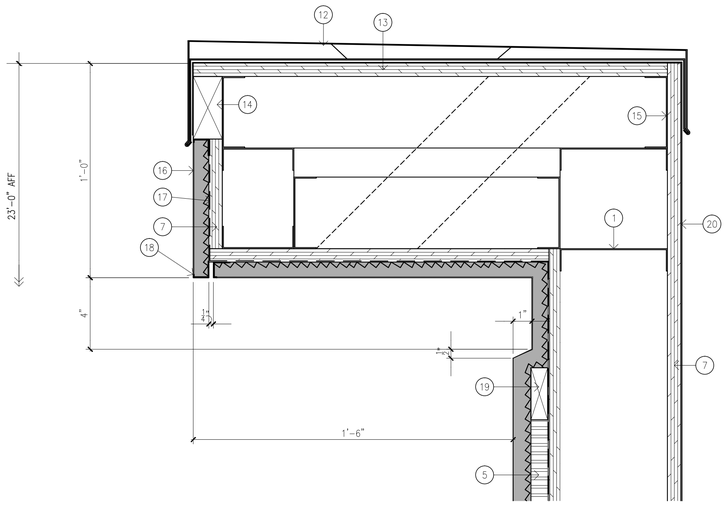

09 ENLARGED DETAIL SCALE : 3"=1'-0"

GENERAL NOTES:

1. ALUMINUM DRIVE-UP WINDOW ASSEMBLY IN LIEU OF ALUMINUM STOREFRONT FRAMING WITH 1" INSULATING GLASS ASSEMBLIES AT SIMILAR CONDITION.

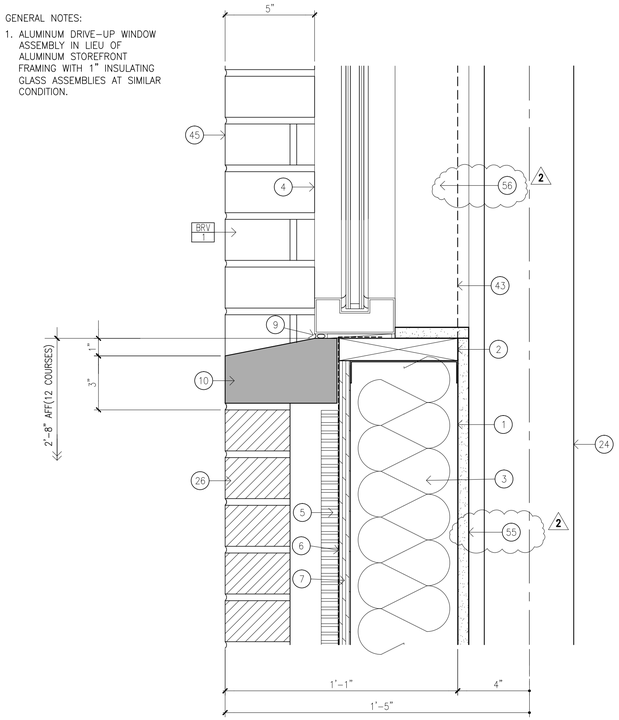

11 ENLARGED DETAIL SCALE : 3"=1'-0"

GENERAL NOTES:

1. CONCRETE WALK IN LIEU OF CONCRETE DRIVE WITH INTEGRAL CURB AT SIMILAR CONDITION.
2. ⅜" TYPE X GYPSUM BOARD AT LEASE 102 ONLY.

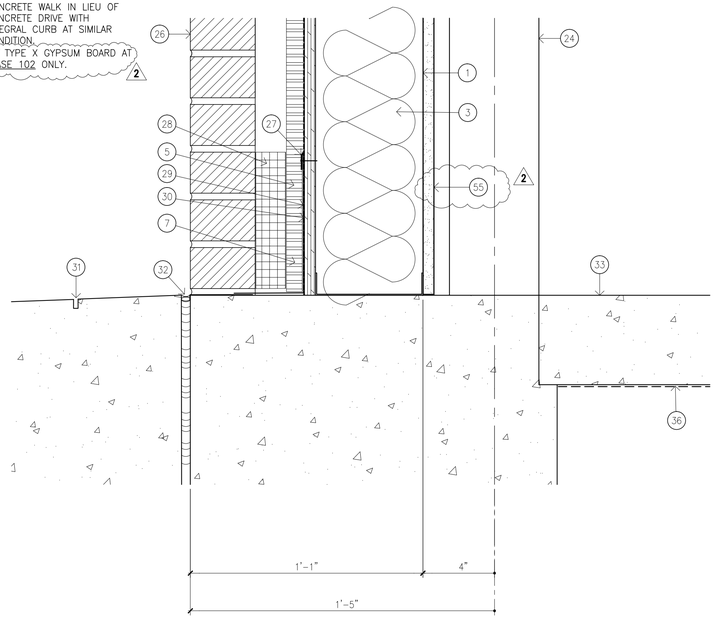

19 ENLARGED DETAIL SCALE : 3"=1'-0"

GENERAL NOTES:

1. CONCRETE DRIVE WITH INTEGRAL CURB IN LIEU OF CONCRETE WALK AT SIMILAR CONDITION.
2. ⅜" TYPE X GYPSUM BOARD AT LEASE 102 ONLY.

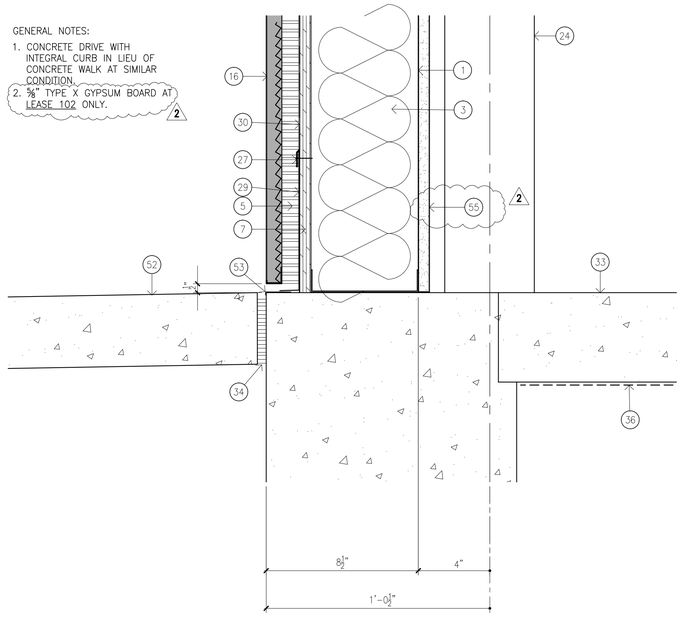

21 ENLARGED DETAIL SCALE : FULL SIZE

23 ENLARGED DETAIL NOTES

GENERAL NOTES:

1. NOT ALL KEYED NOTES APPLY TO ALL ENLARGED DETAILS.

KEYED NOTES:

1. 6" METAL STUDS (16 GAUGE) AT 16" ON CENTER MAXIMUM.
2. 2 X WOOD BLOCKING CUT TO FIT.
3. R-19 THERMAL INSULATING BATTS.
4. ALUMINUM STOREFRONT FRAMING SYSTEM WITH 1" INSULATING GLASS ASSEMBLIES.
5. R-5 RIGID INSULATION.
6. WEATHER-RESISTIVE BARRIER--WRAP AROUND WOOD BLOCKING AND TERMINATE WITH SELF-ADHERED FLASHING.
7. ⅝" OSB SHEATHING.
8. ⅞" STUCCO VENEER ABOVE (OMITTED FOR CLARITY).
9. BACKER ROD AND SEALANT.
10. CAST STONE COPING.
11. CAST STONE COPING END UNIT.
12. MANUFACTURED METAL COPING WITH CONTINUOUS CLEAT.
13. ¾" OSB SHEATHING.
14. 2 X 4 WOOD BLOCKING.
15. 4" METAL STUDS (16 GAUGE) AT 16" ON CENTER MAXIMUM FOR MISCELANIOUS CORNICE FRAMING.
16. ⅞" STUCCO VENEER ON METAL LATH.
17. WEATHER-RESISTIVE BARRIER.
18. DRAINAGE CASING.
19. WOOD BLOCKING AS REQUIRED.
20. 60 MIL TPO ROOF MEMBRANE--WRAP AROUND TOP OF PARAPET AS INDICATED.
21. STUCCO VENEER RETURN BEYOND.
22. 2 X 6 WOOD BLOCKING.
23. HORIZONTAL METAL STUCCO REVEAL.
24. STEEL COLUMN BEYOND--REFER TO STRUCTURAL ENGINEERING DRAWINGS.
25. 2 X 6 METAL STUD BOX BEAM HEADER (16 GAUGE).
26. BRICK VENEER WITH METAL WALL TIES.
27. METAL TERMINATION BAR AND SEALANT.
28. CAVITY DRAINAGE MATERIAL.
29. 12" WIDE SELF-ADHERING FLEXIBLE BASE FLASHING.
30. WEATHER-RESISTIVE BARRIER--EXTEND DOWN TO LEDGE FORMED BY FOUNDATION AND SEAL.
31. CONCRETE CONTROL JOINT--REFER TO CIVIL ENGINEERING DRAWINGS.
32. ⅜" WIDE METAL DRIP EDGE SET IN A CONTINUOUS BEAD OF SEALANT.
33. CONCRETE SLAB ON GRADE--REFER TO STRUCTURAL ENGINEERING DRAWINGS.
34. ½" COMPRESSIBLE FILLER WITH SEALED TOP.
35. CONCRETE GRADE BEAM--REFER TO STRUCTURAL ENGINEERING DRAWINGS.
36. VAPOR RETARDER--REFER TO STRUCTURAL ENGINEERING DRAWINGS.
37. 60 MIL TPO ROOF MEMBRANE--WRAP AROUND BOTTOM OF PARAPET OPENING AS INDICATED.
38. MANUFACTURED METAL COPING BEYOND.
39. 2 X 8 METAL BOX BEAM HEADER (16 GAUGE).
40. METAL COUNTERFLASHING AND SEALANT.
41. LINE OF PARAPET BEYOND.
42. LINE OF EXTERIOR WALL BEYOND.
43. LINE OF WOOD BLOCKING BEYOND.
44. STEEL LINEL ANGLE--REFER TO STRUCTURAL ENGINEERING DRAWINGS.
45. BRICK VENEER RETURN BEYOND.
46. ALUMINUM DRIVE-UP WINDOW ASSEMBLY.
47. OPEN-SIDED FABRIC AWNING BEYOND.
48. WOOD BLOCKING AS REQUIRED FOR CANOPY SUPPORT.
49. PRE-ENGINEERED ALUMINUM CANOPY.
50. METAL SILL FLASHING AT CANOPY.
51. 1 X WOOD BLOCKING CUT TO FIT.
52. CONCRETE WALK--REFER TO CIVIL ENGINEERING DRAWINGS.
53. ½" WIDE METAL DRIP EDGE SET IN CONTINUOUS BEAD OF SEALANT.
54. HOLLOW METAL DOOR AND FRAME.
55. ⅝" TYPE X GYPSUM BOARD--TAPE AND BED JOINTS ONLY.
56. GYPSUM BOARD RETURN BEYOND.
57. SEALANT TAPE.
58. OPEN-SIDED FABRIC AWNING.
59. RECESSED LED ACCENT LIGHT FIXTURE (TYPE A)--REFER TO ELECTRICAL ENGINEERING DRAWINGS.
60. SEALANT.
61. TPO FLASHING LAYERS WITH TPO SEALANT AS INDICATED.
62. PRE-FINISHED METAL SCUPPER FLANGE AT OPENING PERIMETER.
63. PRE-FINISHED METAL SCUPPER SLEEVE.
64. 60 MIL FULLY ADHERED TPO ROOF MEMBRANE.
65. R-30 RIGID INSULATION.
66. METAL DECKING--REFER TO STRUCTURAL ENGINEERING DRAWINGS.
67. STEEL JOISTS--REFER TO STRUCTURAL ENGINEERING DRAWINGS.
68. STEEL BEAM--REFER TO STRUCTURAL ENGINEERING DRAWINGS.
69. STEEL COLUMN--REFER TO STRUCTURAL ENGINEERING DRAWINGS.
70. STUCCO VENEER SILL BELOW.
71. RECESSED WATERPROOF DUPLEX RECEPTACLE--REFER TO ELECTRICAL ENGINEERING DRAWINGS.
72. 4" METAL STUDS (16 GAUGE) AT 16" ON CENTER MAXIMUM.
73. WIND BRACING--REFER TO STRUCTURAL ENGINEERING DRAWINGS.
74. ALUMINUM ENTRANCE SYSTEM WITH 1" INSULATING GLASS ASSEMBLIES.
75. ALUMINUM THRESHOLD BELOW.

REVISIONS

2 7-1-20

TENANT REVISIONS

SHELL ONLY

THE SHOPS AT LUCAS

LUCAS, TEXAS 75002

2650 WEST LUCAS ROAD

10300 N Central Expressway
Suite 450 Dallas, Texas 75231
Telephone: 817-903-6663
dons@dfsarchitect.com

DONALD F. SOPRANZI, AIA, LEED AP
ARCHITECT

Signature 6-1-20

Sealed 6-1-20

Date

Scale

Drawn DS, RA

Job 2020-006

A-7.4

GENERAL NOTES:

1. ALUMINUM ENTRANCE DOORS IN LIEU OF ALUMINUM STOREFRONT FRAMING AT SIMILAR 'A' CONDITION.
2. STEEL COLUMN AND WIND BRACING AT SIMILAR CONDITION 'B'.
3. STEEL COLUMN, WIND BRACING, AND ALUMINUM ENTRANCE DOORS IN LIEU OF ALUMINUM STOREFRONT FRAMING AT SIMILAR CONDITION 'C'.
4. 5/8" TYPE X GYPSUM BOARD AT LEASE 102 ONLY. (2)

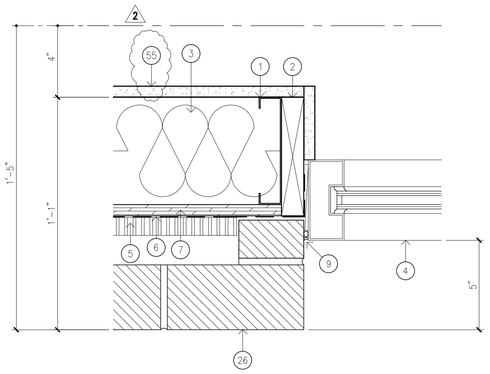

07 ENLARGED DETAIL SCALE : 3"=1'-0"

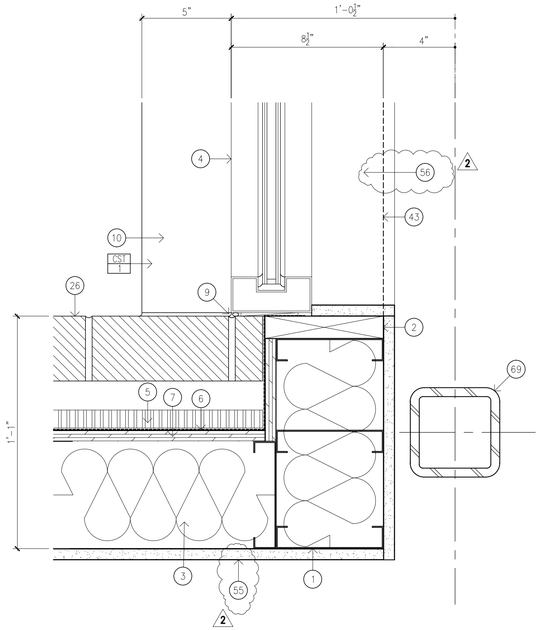

09 ENLARGED DETAIL SCALE : 3"=1'-0"

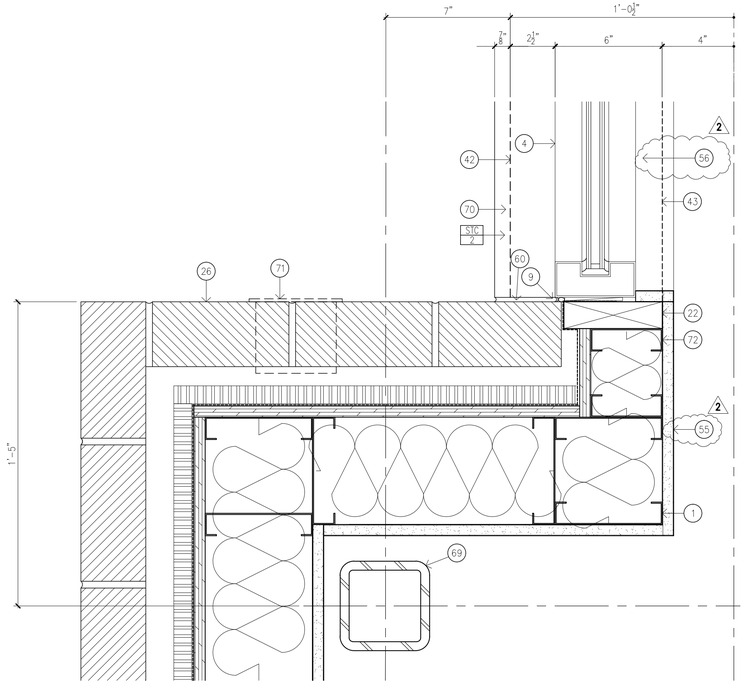

11 ENLARGED DETAIL SCALE : 3"=1'-0"

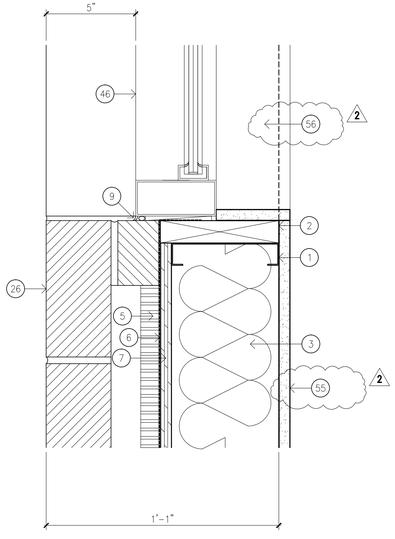

19 ENLARGED DETAIL SCALE : 3"=1'-0"

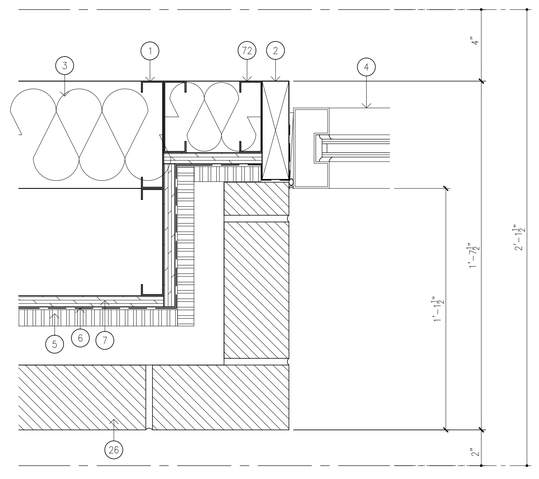

21 ENLARGED DETAIL SCALE : FULL SIZE

GENERAL NOTES:

1. NOT ALL KEYED NOTES APPLY TO ALL ENLARGED DETAILS.

KEYED NOTES:

(1) 6" METAL STUDS (16 GAUGE) AT 16" ON CENTER MAXIMUM.
(2) 2 X WOOD BLOCKING CUT TO FIT.
(3) R-19 THERMAL INSULATING BATTS.
(4) ALUMINUM STOREFRONT FRAMING SYSTEM WITH 1" INSULATING GLASS ASSEMBLIES.
(5) R-5 RIGID INSULATION.
(6) WEATHER-RESISTIVE BARRIER--WRAP AROUND WOOD BLOCKING AND TERMINATE WITH SELF-ADHERED FLASHING.
(7) ⅝" OSB SHEATHING.
(8) ⅞" STUCCO VENEER ABOVE (OMITTED FOR CLARITY).
(9) BACKER ROD AND SEALANT.
(10) CAST STONE COPING.
(11) CAST STONE COPING END UNIT.
(12) MANUFACTURED METAL COPING WITH CONTINUOUS CLEAT.
(13) ¾" OSB SHEATHING.
(14) 2 X 4 WOOD BLOCKING.
(15) 4" METAL STUDS (16 GAUGE) AT 16" ON CENTER MAXIMUM FOR MISCELANIOUS CORNICE FRAMING.
(16) ⅞" STUCCO VENEER ON METAL LATH.
(17) WEATHER-RESISTIVE BARRIER.
(18) DRAINAGE CASING.
(19) WOOD BLOCKING AS REQUIRED.
(20) 60 MIL TPO ROOF MEMBRANE--WRAP AROUND TOP OF PARAPET AS INDICATED.
(21) STUCCO VENEER RETURN BEYOND.
(22) 2 X 6 WOOD BLOCKING.
(23) HORIZONTAL METAL STUCCO REVEAL.
(24) STEEL COLUMN BEYOND--REFER TO STRUCTURAL ENGINEERING DRAWINGS.
(25) 2 X 6 METAL STUD BOX BEAM HEADER (16 GAUGE).
(26) BRICK VENEER WITH METAL WALL TIES.
(27) METAL TERMINATION BAR AND SEALANT.
(28) CAVITY DRAINAGE MATERIAL.
(29) 12" WIDE SELF-ADHERING FLEXIBLE BASE FLASHING.
(30) WEATHER-RESISTIVE BARRIER--EXTEND DOWN TO LEDGE FORMED BY FOUNDATION AND SEAL.
(31) CONCRETE CONTROL JOINT--REFER TO CIVIL ENGINEERING DRAWINGS.
(32) ⅜" WIDE METAL DRIP EDGE SET IN A CONTINUOUS BEAD OF SEALANT.
(33) CONCRETE SLAB ON GRADE--REFER TO STRUCTURAL ENGINEERING DRAWINGS.
(34) ½" COMPRESSIBLE FILLER WITH SEALED TOP.
(35) CONCRETE GRADE BEAM--REFER TO STRUCTURAL ENGINEERING DRAWINGS.
(36) VAPOR RETARDER--REFER TO STRUCTURAL ENGINEERING DRAWINGS.
(37) 60 MIL TPO ROOF MEMBRANE--WRAP AROUND BOTTOM OF PARAPET OPENING AS INDICATED.
(38) MANUFACTURED METAL COPING BEYOND.
(39) 2 X 8 METAL BOX BEAM HEADER (16 GAUGE).
(40) METAL COUNTERFLASHING AND SEALANT.
(41) LINE OF PARAPET BEYOND.
(42) LINE OF EXTERIOR WALL BEYOND.
(43) LINE OF WOOD BLOCKING BEYOND.
(44) STEEL LINEL ANGLE--REFER TO STRUCTURAL ENGINEERING DRAWINGS.
(45) BRICK VENEER RETURN BEYOND.
(46) ALUMINUM DRIVE-UP WINDOW ASSEMBLY.
(47) OPEN-SIDED FABRIC AWNING BEYOND.
(48) WOOD BLOCKING AS REQUIRED FOR CANOPY SUPPORT.
(49) PRE-ENGINEERED ALUMINUM CANOPY.
(50) METAL SILL FLASHING AT CANOPY.
(51) 1 X WOOD BLOCKING CUT TO FIT.
(52) CONCRETE WALK--REFER TO CIVIL ENGINEERING DRAWINGS.
(53) 1½" WIDE METAL DRIP EDGE SET IN CONTINUOUS BEAD OF SEALANT.
(54) HOLLOW METAL DOOR AND FRAME.
(55) ⅝" TYPE X GYPSUM BOARD--TAPE AND BED JOINTS ONLY.
(56) GYPSUM BOARD RETURN BEYOND.
(57) SEALANT TAPE.
(58) OPEN-SIDED FABRIC AWNING.
(59) RECESSED LED ACCENT LIGHT FIXTURE (TYPE A)--REFER TO ELECTRICAL ENGINEERING DRAWINGS.
(60) SEALANT.
(61) TPO FLASHING LAYERS WITH TPO SEALANT AS INDICATED.
(62) PRE-FINISHED METAL SCUPPER FLANGE AT OPENING PERIMETER.
(63) PRE-FINISHED METAL SCUPPER SLEEVE.
(64) 60 MIL FULLY ADHERED TPO ROOF MEMBRANE.
(65) R-30 RIGID INSULATION.
(66) METAL DECKING--REFER TO STRUCTURAL ENGINEERING DRAWINGS.
(67) STEEL JOISTS--REFER TO STRUCTURAL ENGINEERING DRAWINGS.
(68) STEEL BEAM--REFER TO STRUCTURAL ENGINEERING DRAWINGS.
(69) STEEL COLUMN--REFER TO STRUCTURAL ENGINEERING DRAWINGS.
(70) STUCCO VENEER SILL BELOW.
(71) RECESSED WATERPROOF DUPLEX RECEPTACLE--REFER TO ELECTRICAL ENGINEERING DRAWINGS.
(72) 4" METAL STUDS (16 GAUGE) AT 16" ON CENTER MAXIMUM.
(73) WIND BRACING--REFER TO STRUCTURAL ENGINEERING DRAWINGS.
(74) ALUMINUM ENTRANCE SYSTEM WITH 1" INSULATING GLASS ASSEMBLIES.
(75) ALUMINUM THRESHOLD BELOW.

23 ENLARGED DETAIL NOTES

REVISIONS

2 7-1-20

TENANT REVISIONS

SHELL ONLY

THE SHOPS AT LUCAS

LUCAS, TEXAS 75002

2650 WEST LUCAS ROAD

DONALD F. SOPRANZI, AM, LEED AP ARCHITECT
10300 N Central Expressway
Suite 450 Dallas, Texas 75231
Telephone: 817-903-6663
dons@dfsarchitect.com

Signature 6-1-20

Sealed 6-1-20

Date

Scale

Drawn DS, RA

Job 2020-006

A-7.5

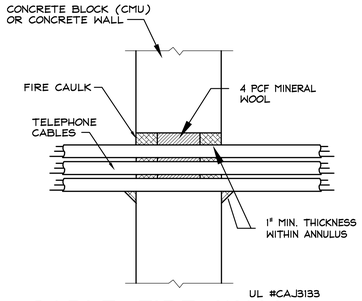

01 CABLE FIRE WALL PENETRATION (CONCRETE BLOCK)

SCALE: N.T.S.

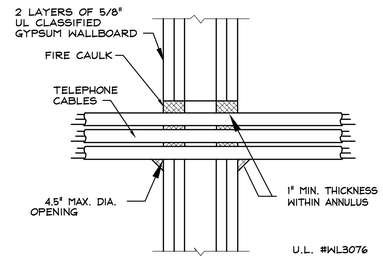

02 CABLE FIRE WALL PENETRATION (DRY WALL)

SCALE: NTS

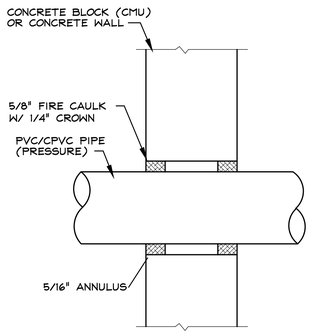

03 EMT/PIPE FIRE WALL PENETRATION (CONCRETE BLOCK)

SCALE: N.T.S.

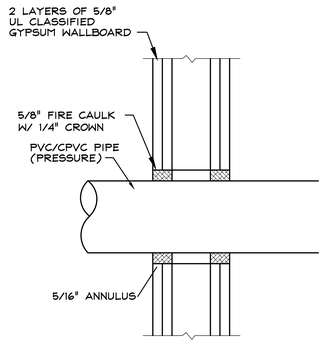

04 EMT/PIPE FIRE WALL PENETRATION (DRY WALL)

SCALE: N.T.S.

THIS CONTRACTOR SHALL PREPARE AND PROVIDE ALL EQUIPMENT SUBMITTALS 30 DAYS AFTER PROJECT CONTRACT IS AWARDED.

UPON RECEIPT OF THE SUBMITTAL DATA (THROUGH NORMAL CHANNELS), THE ENGINEER SHALL HAVE TEN (10) WORKING DAYS TO REVIEW THE DATA FOR COMPLIANCE. MECHANICAL CONTRACTOR SHALL BE RESPONSIBLE FOR VERIFYING ALL MOUNTING

THE ELECTRICAL CONTRACTOR SHALL BEAR ALL EXPENSES THAT OTHER TRADES INCUR AS A RESULT OF PHYSICAL MODIFICATIONS REQUIRED BY APPROVED ALTERNATE ELECTRICAL EQUIPMENT OTHER THAN ORIGINALLY SPECIFIED OR SCHEDULED.

THE FIRE ALARM CONTRACTOR IS SOLELY RESPONSIBLE FOR THE FIRE ALARM DESIGN, DESIGN APPROVAL, INSTALLATION AND FINAL ACCEPTANCE BY THE AUTHORITIES HAVING JURISDICTION. DEVICES AND EQUIPMENT ON THE DRAWING ARE FOR REFERENCE ONLY. FINAL DEVICE TYPES, QUANTITIES, AND LOCATIONS ARE THE RESPONSIBILITY OF THE FIRE ALARM CONTRACTOR. THE ELECTRICAL CONTRACTOR SHALL COORDINATE REQUIREMENTS WITH THE FIRE ALARM CONTRACTOR AND PROVIDE ROUGH-IN AND POWER FOR ALL DEVICES PER THE APPROVED FIRE ALARM PLANS.

THE CONTRACTORS SHALL COORDINATE ALL REQUIRED ACCESS TO ALL ADJOINING SPACES AND LOCKED SPACES WITH THE GENERAL CONTRACTOR WHO SHALL IN TURN COORDINATE THESE REQUIREMENTS WITH THE BUILDING MANAGEMENT TEAM.

ANY PENETRATIONS OF A FIRE RATED WALL BY ANY MECHANICAL AND PLUMBING PIPING, DUCTWORK (WITHOUT FD/SD). CONDUITS AND CABLING FOR POWER, CONTROLS OR DATA/TELEPHONE MUST BE FIRED SEALED PER U.L. DETAILS ON THIS SHEET. REFER TO ARCHITECTURAL CODE REVIEW PLAN SHEETS FOR EXACT LOCATIONS OF ALL FIRE RATED WALLS.

ALL MEP PIPING, CONDUITS, OPEN CONDUCTORS, DUCT WORK AND OTHER MATERIALS THAT ARE TO BE INSTALLED IN THE OPEN AIR PLENUM SHALL BE AIR PLENUM RATED. NO EXCEPTION.

NOTE:

THE ELECTRICAL DRAWINGS ARE INTENDED TO BE STRICTLY DIAGRAMMATIC. THE CONTRACTOR SHALL NOT USE THE ELECTRICAL DRAWINGS FOR SCALING. REFER TO ARCHITECTURAL DIMENSIONAL AND ELEVATION PLANS FOR THIS PURPOSE.

NOTE:

THE CONTRACTOR SHALL COORDINATE AND VERIFY THE PRECISE LOCATION AND MOUNTING HEIGHT OF ALL RECEPTACLES, DATA DROPS, SWITCHES AND OTHER ELECTRICAL DEVICES WITH ARCHITECT PRIOR TO ROUGH IN.

ELECTRICAL SYMBOLS

A○3	RECESSED OR SURFACE, TYPE 'A' DOWNLIGHT FIXTURE ON CIRCUIT #3.
A▭3	RECESSED OR SURFACE, TYPE 'A' LIGHTING TROFFER FIXTURE ON CIRCUIT #3.
	WALL MOUNTED OR BRACKET MOUNTED LIGHTING FIXTURE.
A◒3	RECESSED OR SURFACE, TYPE 'A' WALL WASHER FIXTURE ON CIRCUIT #3.
	HATCHED FIXTURE INDICATING A NIGHT LIGHT OR AN EMERGENCY LIGHTING FIXTURE.
	CEILING MOUNTED EXIT SIGN AND WALL MOUNTED EXIT SIGN.
	UNITARY EMERGENCY LIGHTING FIXTURE
	JUNCTION BOX, SIZED BY E.C. PER NEC.
	GRID SYSTEM JUNCTION BOXES, SIZED BY E.C. PER NEC.
	DUPLEX RECEPTACLE, 20A, 125V, GROUNDED.
	DUPLEX RECEPTACLE, 20A, 125V, ISOLATED GROUND.
	DUPLEX RECEPTACLE, 20A, 125V, GROUND, HALF SWITCHED.
	SIMPLEX RECEPTACLE, 20A (U.N.O.), 125V, GROUNDED.
30	POWER RECEPTACLE, 2 POLE, 250V SINGLE PHASE. AMPS GREATER THAN 20A TO BE NOTED.
	QUADPLEX RECEPTACLE, 20A, 125V, GROUNDED.
30	3 PHASE RECEPTACLE, AMPS GREATER THAN 20A TO BE NOTED.
	TELEPHONE OUTLET, DATA OUTLET, COMBINATION TELEPHONE/DATA OUTLET.
	TELEVISION OUTLET.
	CEILING MOUNTED SPEAKER, WALL MOUNTED SPEAKER.
M	MICROPHONE OUTLETS.
	FLOOR BOX WITH DUPLEX RECEPTACLE.
	FLOOR BOX WITH TELEPHONE OUTLET, FLOOR BOX WITH DATA.
	MULTI-USE FLOOR BOXES.
	MULTI-OUTLET STRIP.
	BUZZER, BELL.
	SINGLE FACE CLOCK, DOUBLE FACE CLOCK.
L	FIRE ALARM HORN, FIRE ALARM HORN AND STROBE ASSEMBLY, FIRE ALARM STROBE.
LF F	FIRE ALARM HORN AND STROBE ASSEMBLY WITH MANUAL PULL STATION, MANUAL PULL STATION.
S T	FIRE ALARM WATER FLOW SWITCH, TAMPER SWITCH.
P PD	FIRE ALARM CEILING MOUNTED SMOKE DETECTOR, DUCT MOUNTED SMOKE DETECTOR.
H	FIRE ALARM HEAT DETECTOR.
S	SINGLE POLE SWITCH.
S3	THREE WAY SWITCH.
S4	FOUR WAY SWITCH.
SD	DIMMER SWITCH.
SK	KEY OPERATED SWITCH.
SK3	KEY OPERATED THREE WAY SWITCH.
SP	MOMENTARY CONTACT SWITCH.
	PUSH BUTTON SWITCH.
	START - STOP PUSH BUTTON SWITCH
	H.O.A. PUSH BUTTON SWITCH.
SM	SINGLE THROW THERMAL SWITCH.
	PUSH BUTTON START / STOP SWITCH.
	MAGNETIC MOTOR STARTER.
	FUSED SWITCH.
	DISCONNECT SWITCH.
	FUSED DISCONNECT SWITCH.
	MOTOR.
	WIRING SYMBOLS: NEUTRAL, HOT, SWITCH, GROUND.
	CONDUIT CONCEALED IN OR BELOW FLOOR.
	PANELBOARD (250 VOLT OR BELOW).
	PANELBOARD (480 VOLT OR 600 VOLT).
	DRY TYPE TRANSFORMER.
	GROUNDING BUS BAR
	TELEPHONE CABINET OR BACKBOARD
A G AG	ABOVE COUNTER, GFCI RECEPTACLE, ABOVE COUNTER GFCI RECEPTACLE.

NOTE: NOT ALL SYMBOLS SHOWN ARE NECESSARILY USED.

MEP ABBREVIATIONS

ABV.	ABOVE
AC	ALTERNATING CURRENT
A/C	AIR CONDITIONER
AFC	ABOVE FINISHED CEILING
AFF	ABOVE FINISHED FLOOR
AFG	ABOVE FINISHED GRADE
AG	ABOVE GRADE AND GFI
AHAP	AS HIGH AS POSSIBLE
AHU	AIR HANDLING UNIT
ALT.	ALTERNATE
AMB.	AMBIENT TEMPERATURE (°F)
AMP	AMPERE
APPROX.	APPROXIMATELY
ARCH.	ARCHITECTURAL
AVG.	AVERAGE
B	BOILER
B.G.	BELOW GRADE
BMS	BUILDING MANAGEMENT SYSTEM
BRD	BAROMETRIC RELIEF DAMPER
BTU	BRITISH THERMAL UNIT
CD	CONSTRUCTION DOCUMENTS
CFH	CUBIC FEET PER HOUR
CFM	CUBIC FEET PER MINUTE
CH	CHILLER
CHEM.	CHEMICAL
CHP	CHILLED WATER PUMP
CKT.	CIRCUIT
CLG.	CEILING
CMPR.	COMPRESSOR
CT	COOLING TOWER
CWP	CONDENSER WATER PUMP
CU	CONDENSING UNIT
DB	DRY BULB
DEFL.	DEFLECTION
DEG. F	DEGREES FAHRENHEIT
DET.	DETAIL
DD	DESIGN DEVELOPMENT
DIA.	DIAMETER
DISC.	DISCONNECT SWITCH
DIM.	DIMENSION
EA	EXHAUST AIR
EDB	ENTERING DRY BULB
EF	EXHAUST FAN
ELEC.	ELECTRICAL
ELEV.	ELEVATION
EMCS.	ENERGY MGMT. CONTROL SYSTEM
E.S.P.	EXTERNAL STATIC PRESS. (IN. W.G.)
EWB	ENTERING WET BULB
EWT	ENTERING WATER TEMPERATURE
EXH.	EXHAUST
EXIST.	EXISTING
F/A	FREE AREA OPENING (SQ. FT.)
FCU	FAN COIL UNIT
FHP	FRACTIONAL HORSE POWER
FLR.	FLOOR
FPI	COIL FINS PER INCH.
FPM	FEET PER MINUTE
FPS	FEET PER SECOND
FT.	FOOT OR FEET
GFI	GROUND FAULT INTERRUPTER
GPM	GALLONS PER MINUTE
HD.	HEAD
HOA	HANDS/OFF/AUTO. MOTOR STARTER
HP	HORSE POWER
HPU	HEAT PUMP UNIT
HR.	HOUR(S)
HT.	HEIGHT
HTG.	HEATING
HTR.	HEATER
HVAC	HEAT,VENT AND AIR CONDITIONING
HWP	HOT WATER PUMP
HX	HEAT EXCHANGER
HZ.	FREQUENCY (HERTZ)
ID	INSIDE DIAMETER OR DIMENSION
IN.	INCHES
KW	KILOWATT
KWH	KILOWATT HOUR
LAT	LEAVING AIR TEMPERATURE
LWT	LEAVING WATER TEMPERATURE
MAX.	MAXIMUM
MCA	MINIMUM CURRENT AMPS.
MOCP	MAX. OVER CURRENT PROTECTION
MBH	1000 BTU PER HOUR
MECH.	MECHANICAL
MFR.	MANUFACTURER
MIN.	MINIMUM
MVD	MANUAL VOLUME DAMPER
N/A	NOT APPLICABLE
NC	NOISE CRITERIA
NIC	NOT IN CONSTRUCTION
NK	NECK DIMENSION
NO.	NUMBER
OA	OUTSIDE AIR
OAR	OWNERS AUTHORIZED REPRESENTATIVE
OBD	OPPOSED BLADE DAMPER
OD	OUTSIDE DIAMETER
ORIG.	ORIGINAL
P.D.	PRESSURE DROP (FT)
PH.	PHASE
PMB	POWERED MIXING BOX
PLBG.	PLUMBING
PNL	PANEL
PRESS.	PRESSURE
RA	RETURN AIR
RAG	RETURN AIR GRILLE
RD.	RADIUS
REF.	REFERENCE
RPM	REVOLUTIONS PER MINUTE
RTU	ROOF TOP UNIT
S/S	SINGLE SPEED MOTOR
S/S/S	START/STOP/STATUS
SA	SUPPLY AIR
SAG	SUPPLY AIR GRILLE
SDC	STAND ALONE DIGITAL CONTROLLER
SEER	SEASON ENERGY EFFICIENCY RATIO
SENS.	SENSIBLE
SP	STATIC PRESSURE
SQ.	SQUARE
STR.	MOTOR STARTER
TEMP.	TEMPERATURE
T.S.P.	TOTAL STATIC PRESSURE (IN. W.G.)
UH	UNIT HEATER
UNO	UNLESS NOTED OTHERWISE
V	VOLT
VAV	VARIABLE AIR VALVE
VEL.	VELOCITY
W	WATT
W/	WITH
W/O	WITHOUT
W.G.	WATER GUAGE
WB	WET BULB
WP	WEATHERPROOF
WPD	WATER PRESSURE DROP
WPG	WEATHERPROOF GFI
XFMR.	TRANSFORMER

REVISIONS

SHELL ONLY

THE SHOPS AT LUCAS

2650 WEST LUCAS ROAD

LUCAS, TEXAS 75002

DONALD F. SOPRANZI AIA, LEED-AP ARCHITECT

10300 N Central Expressway
Suite 450 Dallas, Texas 75231
Telephone: 817-903-6663
dons@dfsarchitect.com

Signature 6-30-20

Sealed 6-30-20

Date June 30, 2020

Scale AS NOTED

Drawn RLN

Job 2020-006

E1.1

Seal: STATE OF TEXAS, Richard L. Norris, 100089, REGISTERED, PROFESSIONAL ENGINEER

The seal on this document was authorized by Richard L. Norris, P.E. 100089 on the date shown below.

Richard L Norris

June 30, 2020

Project # 1798

R Squared Consulting Engineers, Inc.

Firm Registration: F-15033
4703 Merrimac Road
Dallas, Texas 75209
Cell: 972-814-5007, Office 214-548-5118
Rnorris@R2engineers.com

©COPYRIGHT 2020

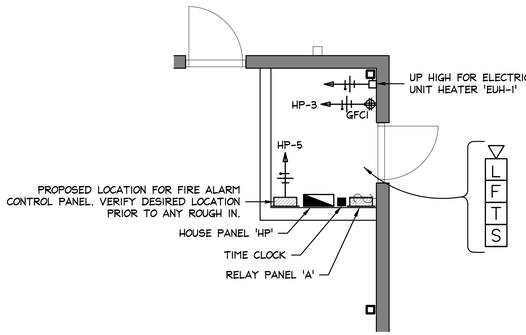

02 ENLARGED RISER ROOM

SCALE: 1/8"=1'-0"

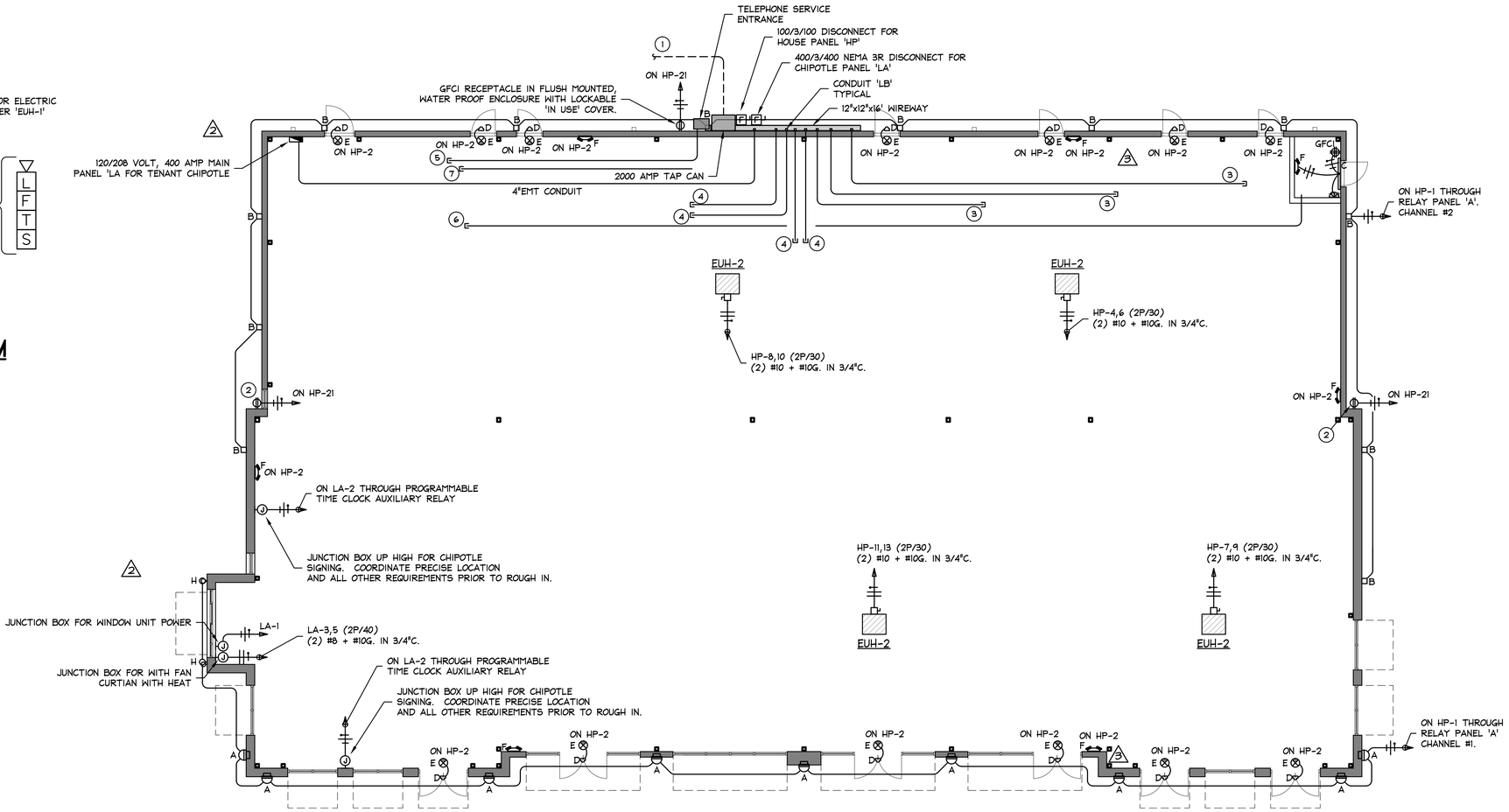

01 FLOOR PLAN-ELECTRICAL

SCALE: 1/8"=1'-0"

LIGHT FIXTURE SCHEDULE

MARK	DESCRIPTION	LENS / LAMPS	REMARKS
A	SOLID STATE AREA LIGHT. THE CONTRACTOR SHALL PROVIDE ALL NECESSARY ACCESSORIES FOR A CODE COMPLIANT INSTALLATION.	SMOOTH FINISH 14W LED	
	U.S. ARCHITECTURAL LIGHTING: 3091-12LED-NW-120-RAL-7004		
B	LED WALL PACK. THE CONTRACTOR SHALL PROVIDE ALL NECESSARY ACCESSORIES FOR A CODE COMPLIANT INSTALLATION.	38W LED	FIXTURE TYPE 'B1' IS THE SAME AS FIXTURE TYPE 'B' EXCEPT IT IS 208 VOLT INSTEAD OF 120 VOLT.
	LUMARK: XTOR4B-AP		
C	LED STRIP LIGHT	37W LED	
	METALUX: 4BCLED-LD4-36SL-F-UNV-L840-CD1		
D	LED WET LOCATION EMERGENCY LIGHT	1.4W LED	
	SURE-LITE: SELW-25-NC-SILVER		
E	EXIT SIGN WITH LED BACK LIGHT	1.4W LED	
	SURE-LITE: APX-7-U-R-BK		
F	UNITARY DUAL HEAD BATTERY POWERED EMERGENCY LIGHTING FIXTURE WITH ADJUSTABLE HEADS. VERIFY FIXTURE COLOR AND MOUNTING HEIGHT WITH ARCHITECT PRIOR TO ORDERING.	0.6W LED	
	SURE-LITE: SEL-50-NICAD-W-SD-SQ		
G	22" SKYLINE LED AREA/FLOOD SITE LIGHT FIXTURE. CUSTOM ORDER FINISH TO MATCH FIXTURE 'A' (RAL-7004)	300W LED	USE 22.5' POLE MATCHED TO FIXTURE 'A' (RAL-7004). 4"x4" SQUARE STRAIGHT POLE WITH WALL GUAGE #11. AND BOLT CIRCLE 8,
	TECH-D: T322LEDB-300-UNI12-40-T3-MTO-HS		DALLAS POLE: SSP22.5-4-11
H	LED UP/DOWN DUAL HEAD WALL FIXTURE	8W LED	
	LUMIERE: 904-UD-8LED-30-25-12-CS		

NOTE:
THE CONTRACTOR SHALL VERIFY THE FIXTURE SELECTION, FINISHES AND PRECISE INSTALLATION LOCATIONS AND MOUNTING HEIGHTS WITH THE ARCHITECT PRIOR TO ORDERING AND INSTALLATION OF ROUGH IN.

OCUPANCY SENSOR SYMBOL LEGEND

SYMBOL	DESCRIPTION	SENSOR SWITCH CATALOG NUMBER
	CEILING MOUNTED, 360°, DUEL TECHNOLOGY OCCUPANCY SENSOR.	CM-PDT-10
	WALL MOUNTED, 180°, LINE VOLTAGE, DUEL TECHNOLOGY OCCUPANCY SENSOR WITH INTEGRAL SWITCH.	LWS-PDT
	OCCUPANCY SENSOR CONTROLLED POWER PACK (24 VOLT CONTROL).	
	LOW VOLTAGE CONTROL WIRING (3 @ 16 AWG) FROM OCCUPANCY SENSORS TO POWER PACKS.	
	RELAYED HOT LEG FROM POWER PACK, ACTIVATED BY OCCUPANCY SENSOR.	

NOTES BY SYMBOL:

1. (5) 4" CONDUITS FOR (4) #600 MCM IN EACH. EXTEND TO UTILITY PROVIDERS TRANSFORMER. COORDINATE ROUTING AND ALL OTHER REQUIREMENTS ON SITE PRIOR TO ANY ROUGH IN, REFER TO THE CIVIL PLANS FOR CONTINUATION.
2. GFCI RECEPTACLE IN FLUSH MOUNTED, WATER PROOF ENCLOSURE WITH LOCKABLE 'IN USE' COVER.
3. 4" EMT CONDUIT WITH NYLON PULL CORD.
4. 3" EMT CONDUIT WITH NYLON PULL CORD.
5. 1" PVC CONDUIT WITH NYLON PULL CORD FOR TELEPHONE SERVICE ENTRANCE.
6. 1" EMT CONDUIT WITH NYLON PULL CORD FOR CONNECTION TO BUILDING FIRE ALARM.
7. (1) 2" CONDUIT WITH NYLON PULL CORD FOR I.T. CONNECTION REUIREMENTS.

FIRE ALARM

THE FIRE ALARM CONTRACTOR IS SOLELY RESPONSIBLE FOR THE FIRE ALARM DESIGN, DESIGN APPROVAL, INSTALLATION AND FINAL ACCEPTANCE BY THE AUTHORITIES HAVING JURISDICTION. DEVICES AND EQUIPMENT ON THE DRAWING ARE FOR REFERENCE ONLY. FINAL DEVICE TYPES, QUANTITIES, AND LOCATIONS ARE THE RESPONSIBLITY OF THE FIRE ALARM CONTRACTOR. THE ELECTRICAL CONTRACTOR SHALL COORDINATE ALL REQUIREMENTS WITH THE APPROVED FIRE ALARM PLANS.

REVISIONS
2 TENANT REVISIONS
3 REVISION
6 REVISION

SHELL ONLY

THE SHOPS AT LUCAS

2650 WEST LUCAS ROAD LUCAS, TEXAS 75002

DONALD F SOPRANZI, MA, LEED AP, ARCHITECT
10300 N Central Expressway
Suite 450 Dallas, Texas 75231
Telephone: 817-903-6663
dons@dfsarchitects.com

Signature 6-30-20
Sealed 6-30-20
Date June 30, 2020
Scale AS NOTED
Drawn RLN
Job 2020-006

E2.1

The seal on this document was authorized by Richard L. Norris, P.E. 100089 on the date shown below.

June 30, 2020
Project # 1798

R Squared Consulting Engineers, Inc.
Firm Registration: F-15033
4700 Worchester Lane
McKinney, Texas 75070
Cell: 972-345-5007, Office 214-548-5118
RSquared@Sbcglobal.net

© COPYRIGHT 2020

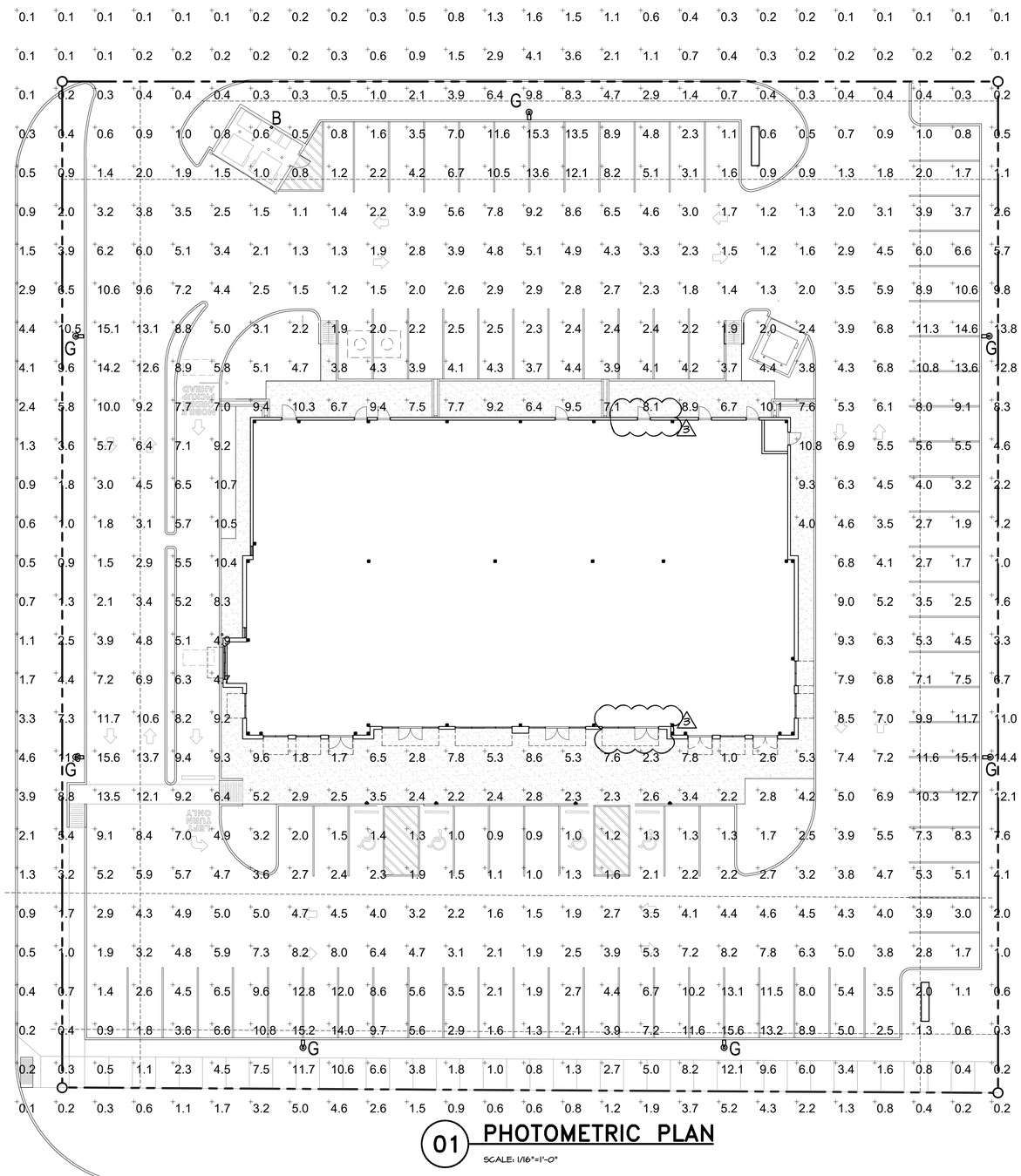

01 PHOTOMETRIC PLAN

SCALE: 1/16"=1'-0"

REVISIONS

TENANT REVISIONS

3 REVISION

SHELL ONLY

THE SHOPS AT LUCAS

LUCAS, TEXAS 75002

2650 WEST LUCAS ROAD

DONALD F. SOPRANZI, MA, LEED AP, ARCHITECT

10300 N Central Expressway
Suite 450 Dallas, Texas 75231
Telephone: 817-903-6663
dons@dfsarchitects.com

Signature 6-30-20

Sealed 6-30-20

Date June 30, 2020

Scale AS NOTED

Drawn RLN

Job 2020-006

E2.2

Seal: STATE OF TEXAS — Richard L. Norris — 100089 — REGISTERED — PROFESSIONAL ENGINEER

The seal on this document was authorized by Richard L. Norris, P.E. 100089 on the date shown below.

June 30, 2020
Project # 1798

R Squared Consulting Engineers, Inc.
Firm Registration: F-15033
4720 Worchester Lane
McKinney, Texas 75070
Cell: 972-814-5057, Office 214-548-5118
Rnorris@RSengineers.com

© COPYRIGHT 2020

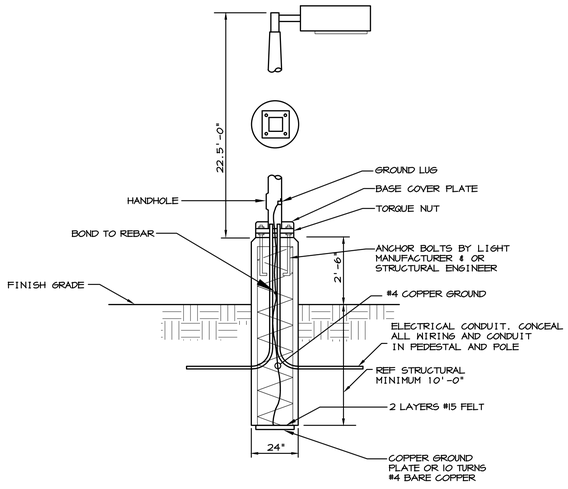

VERIFY ALL REQUIREMENTS WITH THE ARCHITECTURAL DRAWINGS AND THE STRUCTURAL ENGINEER PRIOR TO ANY ROUGH IN

03 POLE BASE DETAIL

SCALE: NO SCALE

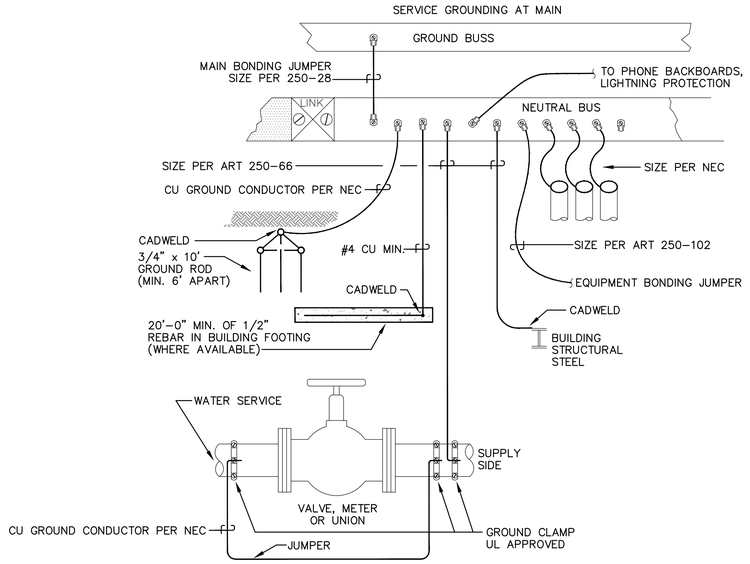

02 NEUTRAL GROUNDING DETAIL

SCALE: NONE

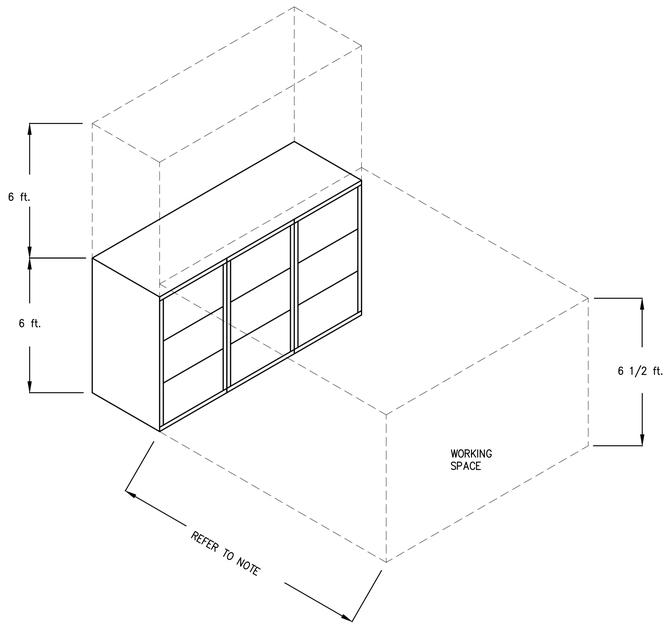

NOMINAL VOLTAGE	MINIMAL CLEAR DISTANCE		
	CONDITION 1	CONDITION 2	CONDITION 3
0 – 150	900 mm (3 FT)	900 mm (3 FT)	900 mm (3 FT)
151 – 600	900 mm (3 FT)	1 mm (3 1/2 FT.)	1.2 m (4 FT.)

NOTE: WHERE THE CONDITIONS ARE AS FOLLOWS:

CONDITION 1 – EXPOSED LIVE PARTS ON ONE SIDE AND NO LIVE GROUNDED PARTS ON THE OTHER SIDE OF THE WORKING SPACE, OR EXPOSED LIVE PARTS ON BOTH SIDES EFFECTIVELY GUARDED BY SUITABLE WOOD OR OTHER INSULATING MATERIALS. INSULATED WIRE OR INSULATED BUSBARS OPERATING AT NOT OVER 300 VOLTS TO GROUND SHALL NOT BE CONSIDERED LIVE PARTS.

CONDITION 2 – EXPOSED LIVE PARTS ON ONE SIDE AND GROUNDED PARTS ON THE OTHER SIDE. CONCRETE, BRICK, OR TILE WALLS SHALL BE CONSIDERED AS GROUNDED.

CONDITION 3 – EXPOSED LIVE PARTS ON BOTH SIDES OF THE WORK SPACE (NOT GROUNDED AS PROVIDED IN CONDITION 1) WITH THE OPERATOR BETWEEN.

01 PANEL WORK SPACE DETAIL

SCALE: NONE

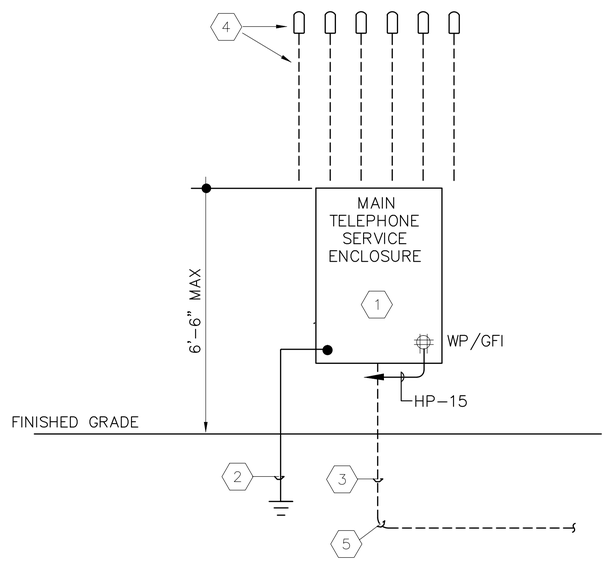

KEY NOTES:

1. 30"W. X 42"H. X 12"D. LOCKABLE WEATHERPROOF TELEPHONE ENCLOSURE. WITH 3/4" 'AB' GRADE PLYWOOD TELEPHONE BACKBOARD OF EQUAL SIZE AND QUAD RECEPTACLE MOUNTED INSIDE.
2. #6 CU. TO MAIN BUILDING GROUND.
3. TWO 3" SCHEDULE 40 PVC CONDUIT WITH PULL WIRE, UNDERGROUND TO TELEPHONE COMPANY POINT OF SERVICE AT PROPERTY LINE. CONDUIT, TRENCHING, AND BACK FILL BY CONTRACTOR PER TELEPHONE COMPANY SPECS./REQUIREMENTS SEE ALSO SITE PLAN SPECIAL NOTES.
4. 2" EMPTY CONDUIT WITH PULLWIRE TO EACH TENANT SPACE FOR TELEPHONE SERVICE.
5. LONG-SWEEP RADIUS ELLS (TYPICAL FOR ALL SERVICE CONDUIT. PER UTILITY CO. AND NEC.

04 TELEPHONE RISER DIAGRAM

SCALE: NONE

Seal
STATE OF TEXAS
Richard L. Norris
100089
REGISTERED
PROFESSIONAL ENGINEER

The seal on this document was authorized by Richard L. Norris, P.E. 100089 on the date shown below.

June 30, 2020
Project # 1798

R Squared Consulting Engineers, Inc.
Firm Registration: F-15033
4703 Merrimac Lane
Fort Worth, Texas 76107
Cell: 972-814-5007, Office 214-548-5118
Rnorris@R2engineers.com
©COPYRIGHT 2020

REVISIONS

SHELL ONLY

THE SHOPS AT LUCAS

2650 WEST LUCAS ROAD

LUCAS, TEXAS 75002

DONALD F. SOPRANZI AIA, LEED AP ARCHITECT
10300 N Central Expressway
Suite 450 Dallas, Texas 75231
Telephone: 817-903-6663
dons@dfsarchitect.com

Signature 6-30-20
Sealed 6-30-20
Date June 30, 2020
Scale AS NOTED
Drawn RLN
Job 2020-006

E3.1

CHIPOTLE PANEL 'LA'

DESCRIPTION	POLES	TRIP	CIRCUIT	LIGHTING	POWER	POWER	LIGHTING	CIRCUIT	TRIP	POLES	DESCRIPTION
DRIVE THROUGH WINDOW	1P	20	1		1800		1500	2	20	1P	SIGNING
HEATED AIR CURTIAN	2P		3		3016		1500	4	20	1P	SIGNING
		40	5		3016			6	20	1P	
	1P	20	7					8	20	1P	
	1P	20	9					10	20	1P	
	1P	20	11					12	20	1P	
	1P	20	13					14	20	1P	
	1P	20	15					16	20	1P	
	1P	20	17					18	20	1P	
	1P	20	19					20	20	1P	
	1P	20	21					22	20	1P	
	1P	20	23					24	20	1P	
	1P	20	25					26	20	1P	
	1P	20	27					28	20	1P	
	1P	20	29					30	20	1P	
	1P	20	31					32	20	1P	
	1P	20	33					34	20	1P	
	1P	20	35					36	20	1P	
	1P	20	37					38	20	1P	
	1P	20	39					40	20	1P	
	1P	20	41					42	20	1P	

GROUND BUS
22K AIC RATED

CONNECTED LIGHTING	3000	X 1.25	3750
CONNECTED POWER			7832
TOTAL DESIGN LOAD			11582
TOTAL CONNECTED AMPS			32.19

DESIGNATION	CHIPOTLE PANEL 'LA'
MOUNTING	SURFACE
VOLTAGE-PHASE-WIRE	120 208 3 PH 4 WIRE
MAINS TYPE	MLO
MAINS AMPS	400

PANEL 'HP'

DESCRIPTION	POLES	TRIP	CIRCUIT	LIGHTING	POWER	POWER	LIGHTING	CIRCUIT	TRIP	POLES	DESCRIPTION
EXTERIOR LIGHTING	1P	20	1	582		1500		2	20	1P	EXIT SIGNS & EMERGENCY LIGHTS
RISER ROOM QUAD & LIGHTING	1P	20	3	37	360	2500		4		2P	ELECTRIC UNIT HEATER, EUH-1
FIRE ALARM CONTROL PANEL	1P	20	5		900	2500		6	30		
ELECTRIC UNIT HEATER, EUH-1	2P		7		2500	2500		8		2P	ELECTRIC UNIT HEATER, EUH-1
		30	9		2500	2500		10	30		
ELECTRIC UNIT HEATER, EUH-1	2P		11		2500			12	20	1P	
		30	13		2500			14	20	1P	
TELEPHONE SERVICE ENTRANCE	1P	20	15		600			16	20	1P	
MONUMENT SIGN	1P	20	17	1500				18	20	1P	
MONUMENT SIGN	1P	20	19	1500			1050	20		2P	SITE LIGHTING
EXTERIOR RECEPTACLES	1P	20	21		540		1050	22	20		
	1P	20	23					24	20	1P	
	1P	20	25					26	20	1P	
	1P	20	27					28	20	1P	
	1P	20	29					30	20	1P	

GROUND BUS
22K AIC RATED

CONNECTED LIGHTING	5719	X 1.25	7149
CONNECTED POWER			23900
TOTAL DESIGN LOAD			31049
TOTAL CONNECTED AMPS			86.28

DESIGNATION	PANEL 'HP'
MOUNTING	SURFACE
VOLTAGE-PHASE-WIRE	120/208 3 PH 4 WIRE
MAINS TYPE	MLO
MAINS AMPS	200

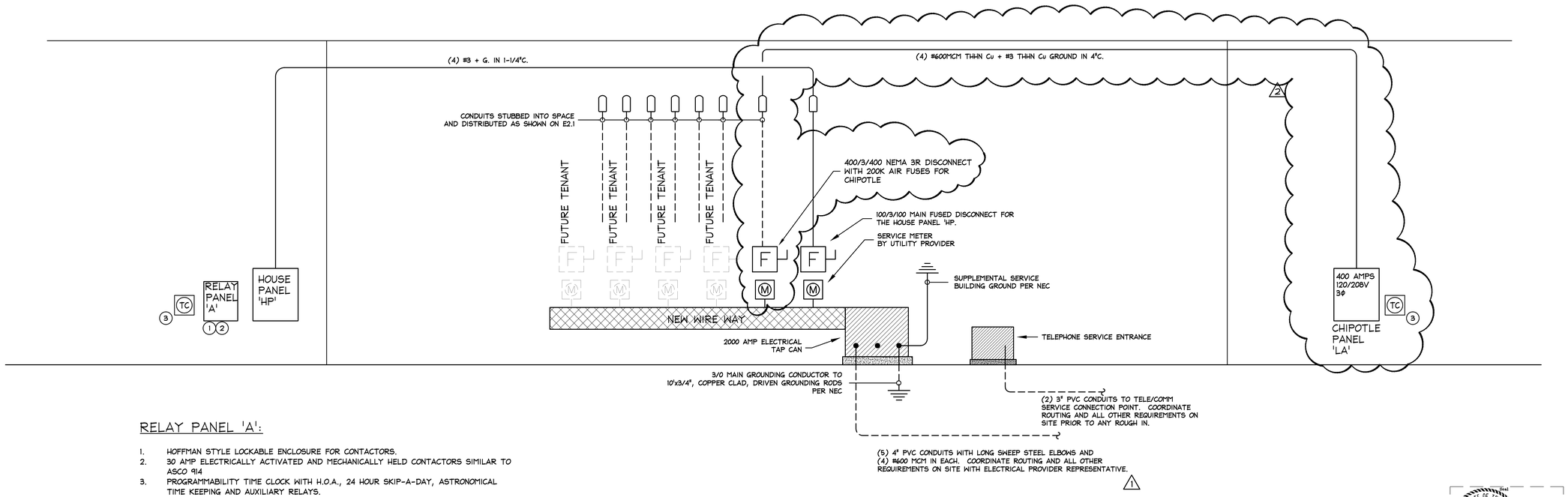

RELAY PANEL 'A':

1. HOFFMAN STYLE LOCKABLE ENCLOSURE FOR CONTACTORS.
2. 30 AMP ELECTRICALLY ACTIVATED AND MECHANICALLY HELD CONTACTORS SIMILAR TO ASCO 914
3. PROGRAMMABILITY TIME CLOCK WITH H.O.A., 24 HOUR SKIP-A-DAY, ASTRONOMICAL TIME KEEPING AND AUXILIARY RELAYS.
   3.1. TORK: DZS MULTI-CHANNNEL SERIES OR EQUAL

01 ELECTRICAL RISER DIAGRAM

SCALE: NONE

REVISIONS

2 TENANT REVISIONS

SHELL ONLY

THE SHOPS AT LUCAS

LUCAS, TEXAS 75002

2650 WEST LUCAS ROAD

DONALD F. SOPRANZI AIA, LEED AP ARCHITECT
10300 N Central Expressway
Suite 450 Dallas, Texas 75231
Telephone: 817-903-6663
dons@dfsarchitect.com

1 Revision 06.15.20

Signature 6-30-20
Sealed 6-30-20
Date June 30, 2020
Scale AS NOTED
Drawn RLN
Job 2020-006

E4.1

STATE OF TEXAS Richard L. Norris 100089 Licensed PROFESSIONAL ENGINEER

The seal on this document was authorized by Richard L. Norris, P.E. 100089 on the date shown below.

June 30, 2020
Project # 1798

R Squared Consulting Engineers, Inc.
Firm Registration: F-15033
4725 Westchester Lane
McKinney, Texas 75070
Cell: 972-814-5007, Office 214-548-5118
Rnorris@RSengineers.com

©COPYRIGHT 2020

HVAC LEGEND

SINGLE LINE	DESCRIPTION	DOUBLE LINE
	90° ELBOW DOWN	
	90° ELBOW UP	
	OFFSET TO CHANGE ELEVATION (AT 30° WHEN POSSIBLE ARROW SLOPES DN.)	
	ROUND RADIUS ELBOW	
	45° ELBOW	
	90° STRAIGHT TEE	
	90° CONICAL TEE	
	45° BRANCH	
	45° CONICAL TEE	
	SIZE TRANSITION	
	SHAPE TRANSITION	
	ROUND FLEXIBLE DUCT	
	90° ELBOW DOWN W/ TURNING VANES (U.N.O.)	
	90° ELBOW UP W/ TURNING VANES (U.N.O.)	
	TEE WITH SPLITTER & TURNING VANES IN VERTICAL	
	OFFSET TO CHANGE ELEVATION (AT 30° WHEN POSSIBLE ARROW SLOPES DN.)	
	RECTANGULAR RADIUS ELBOW	
	RECTANGULAR ELBOW WITH TURNING VANES	
	SPLIT BRANCH TAKE-OFF WITH SQUARE ELBOW AND SPLITTER DAMPER.	
	SPLIT BRANCH TAKE-OFF WITH RADIUS ELBOW AND SPLITTER DAMPER.	
	BRANCH TAKE-OFF WITHOUT AIR BALANCING DAMPER.	
	BRANCH TAKE-OFF WITH AIR BALANCING DAMPER. (SCOOP DAMPER)	
	TEE WITH SPLITTER DAMPER	
	SPIN-IN TAP WITH DAMPER	
	SQUARE NECK CLG. DIFFUSER 4-WAY DIRECTIONAL THROW UNLESS INDICATED OTHERWISE.	
	SQUARE NECK CLG. DIFFUSER 4-WAY DIRECTIONAL THROW UNLESS INDICATED OTHERWISE.	
	SIDEWALL SUPPLY GRILLE OR REGISTER WITH O.B.D.	
	SUPPLY DUCT RISER	
	RETURN, EXHAUST OR OUTSIDE AIR DUCT RISER.	
	CEILING RETURN AIR GRILLE OR REGISTER	
	DOOR GRILLE	
	VOLUME DAMPER	
	FIRE DAMPER	
	MOTORIZED DAMPER	
	GRAVITY BACKDRAFT DAMPER	
	AUTO SMOKE DAMPER	
	DUCT MOUNTED SMOKE DETECTOR	
	SMOKE/FIRE DAMPERS (GLASS II MIN.)	
	THERMOSTAT OR TEMPERATURE SENSOR	
	ROOM HUMIDISTAT / CARBON DIOXIDE SENSORS	

NOTE: NOT ALL SYMBOLS SHOWN ARE NECESSARILY USED.

MEP ABBREVIATIONS

ABV.	ABOVE
AC	ALTERNATING CURRENT
A/C	AIR CONDITIONER
AFC	ABOVE FINISHED CEILING
AFF	ABOVE FINISHED FLOOR
AFG	ABOVE FINISHED GRADE
AG	ABOVE GRADE AND GFI
AHAP	AS HIGH AS POSSIBLE
AHU	AIR HANDLING UNIT
ALT.	ALTERNATE
AMB.	AMBIENT TEMPERATURE (°F)
AMP.	AMPERE
APPROX.	APPROXIMATELY
ARCH.	ARCHITECTURAL
AVG.	AVERAGE
B	BOILER
B.G.	BELOW GRADE
BMS	BUILDING MANAGEMENT SYSTEM
BRD	BAROMETRIC RELIEF DAMPER
BTU	BRITISH THERMAL UNIT
CD	CONSTRUCTION DOCUMENTS
CFH	CUBIC FEET PER HOUR
CFM	CUBIC FEET PER MINUTE
CH.	CHILLER
CHEM.	CHEMICAL
CHP	CHILLED WATER PUMP
CKT.	CIRCUIT
CLG.	CEILING
CMPR.	COMPRESSOR
CT	COOLING TOWER
CWP	CONDENSER WATER PUMP
CU	CONDENSING UNIT
DB	DRY BULB
DEFL.	DEFLECTION
DEG. F	DEGREES FAHRENHEIT
DET.	DETAIL
DD	DESIGN DEVELOPMENT
DIA.	DIAMETER
DISC.	DISCONNECT SWITCH
DIM.	DIMENSION
EA	EXHAUST AIR
EDB	ENTERING DRY BULB
EF	EXHAUST FAN
ELEC.	ELECTRICAL
ELEV.	ELEVATION
EMCS.	ENERGY MGMT. CONTROL SYSTEM
E.S.P.	EXTERNAL STATIC PRESS. (IN. W.G.)
EWB	ENTERING WET BULB
EWT	ENTERING WATER TEMPERATURE
EXH.	EXHAUST
EXIST.	EXISTING
F/A	FREE AREA OPENING (SQ. FT.)
FCU	FAN COIL UNIT
FHP	FRACTIONAL HORSE POWER
FLR.	FLOOR
FPI	COIL FINS PER INCH.
FPM	FEET PER MINUTE
FPS	FEET PER SECOND
FT.	FOOT OR FEET
GFI	GROUND FAULT INTERRUPTER
GPM	GALLONS PER MINUTE
HD.	HEAD
HOA	HANDS/OFF/AUTO. MOTOR STARTER
HP	HORSE POWER
HPU	HEAT PUMP UNIT
HR.	HOUR(S)
HT.	HEIGHT
HTG.	HEATING
HTR.	HEATER
HVAC	HEAT,VENT AND AIR CONDITIONING
HWP	HOT WATER PUMP
HX	HEAT EXCHANGER
HZ.	FREQUENCY (HERTZ)
ID	INSIDE DIAMETER OR DIMENSION
IN.	INCHES
KW	KILOWATT
KWH	KILOWATT HOUR
LAT	LEAVING AIR TEMPERATURE
LWT	LEAVING WATER TEMPERATURE
MAX.	MAXIMUM
MCA	MINIMUM CURRENT AMPS.
MOCP	MAX. OVER CURRENT PROTECTION
MBH	1000 BTU PER HOUR
MECH.	MECHANICAL
MFR.	MANUFACTURER
MIN.	MINIMUM
MVD	MANUAL VOLUME DAMPER
N/A	NOT APPLICABLE
NC	NOISE CRITERIA
NIC	NOT IN CONSTRUCTION
NK	NECK DIMENSION
NO.	NUMBER
OA	OUTSIDE AIR
OAR	OWNERS AUTHORIZED REPRESENTATIVE
OBD	OPPOSED BLADE DAMPER
OD	OUTSIDE DIAMETER
ORIG.	ORIGINAL
P.D.	PRESSURE DROP (FT)
PH.	PHASE
PMB	POWERED MIXING BOX
PLBG.	PLUMBING
PNL.	PANEL
PRESS.	PRESSURE
RA	RETURN AIR
RAG	RETURN AIR GRILLE
RD.	RADIUS
RE.	REFERENCE
RPM	REVOLUTIONS PER MINUTE
RTU	ROOF TOP UNIT
S/S	SINGLE SPEED MOTOR
S/S/S	START/STOP/STATUS
SA	SUPPLY AIR
SAG	SUPPLY AIR GRILLE
SDC	STAND ALONE DIGITAL CONTROLLER
SEER	SEASON ENERGY EFFICIENCY RATIO
SENS.	SENSIBLE
SP	STATIC PRESSURE
SQ.	SQUARE
STR.	MOTOR STARTER
TEMP.	TEMPERATURE
T.S.P.	TOTAL STATIC PRESSURE (IN. W.G.)
UH	UNIT HEATER
UNO	UNLESS NOTED OTHERWISE
V	VOLT
VAV	VARIABLE AIR VALVE
VEL.	VELOCITY
W	WATT
W/	WITH
W/O	WITHOUT
W.G.	WATER GUAGE
WB	WET BULB
WP.	WEATHERPROOF
WPD	WATER PRESSURE DROP
WPG	WEATHERPROOF GFI
XFMR.	TRANSFORMER

HVAC & PLUMBING, VALVE & FITTINGS SYMBOLS

	SOIL OR WASTE
SD	STORM
	VENT
	COLD WATER
	HOT WATER
	HOT WATER RECIRCULATION
G	GAS
CHS/R	CHILLED WATER SUPPLY/RETURN
PCHS/R	PRODUCTION CHILLED WATER SUPPLY/RETURN
HWS/R	HOT WATER SUPPLY/RETURN
CS/R	CONDENSER WATER SUPPLY/RETURN
RS/RL	REFRIGERANT SUCTION AND LIQUID LINES
CD	CONDENSATE DRAIN LINE
	LOW PRESSURE STEAM CONDENSATE
	MEDIUM PRESSURE STEAM CONDENSATE
	HIGH PRESSURE STEAM CONDENSATE
	LOW PRESSURE STEAM SUPPLY (0 TO 15 PSIG)
	MEDIUM PRESSURE STEAM SUPPLY (15 TO 100 PSIG)
	HIGH PRESSURE STEAM (ABOVE 100 PSIG)
	FLOAT AND THERM. TRAP
B	BUCKET STEAM TRAP
	GATE VALVE
	BALANCING VALVE
CO	FLOOR CLEAN OUT
CO	CLEAN OUT
F	FIRE LINE
	BRANCH LINE WITH SPRINKLER HEADS
	FLOOR DRAIN
	HUB DRAIN
D.S.	DOWN SPOUT
F.H.C.	FIRE HOSE CABINET
V.T.R.	VENT THRU ROOF
R.D.	ROOF DRAIN
	CHECK VALVE
	OS & Y VALVE
	GLOBE VALVE
	BUTTERFLY VALVE
	BALL VALVE
S	SOLENOID VALVE
	PRESSURE REDUCING VALVE
	PRESSURE RELIEF VALVE
	CONTROL, 2 WAY VALVE
	CONTROL, 3 WAY VALVE
	STRAINER & BLOW OFF VALVE
	PRESSURE GAUGE & COCK
OR	UNION OR COMPANION FLANGES
	PLUG VALVE
	THERMOMETER
	PRESSURE & TEMPERATURE TAP (PETES PLUG)
T	THERMOSTAT
H	HUMIDISTAT
F	FLOW METER
	ANCHOR (PIPE)
	EXPANSION JOINT
	MANUAL AIR VENT
	AUTOMATIC AIR VENT
	HOSE END DRAIN
	HOSE BIBB
	THERMOMETER & WELL
T	TEMPERATURE SENSOR
F	FLOW SWITCH
	PRESSURE SENSOR

NOTE: NOT ALL SYMBOLS SHOWN ARE NECESSARILY USED.

PRODUCT SUBMITTAL DATA NOTE:

THIS CONTRACTOR SHALL PREPARE AND PROVIDE ALL EQUIPMENT SUBMITTALS 30 DAYS AFTER PROJECT CONTRACT IS AWARDED.

UPON RECEIPT OF THE SUBMITTAL DATA (THROUGH NORMAL CHANNELS), THE ENGINEER SHALL HAVE TEN (10) WORKING DAYS TO REVIEW THE DATA FOR COMPLIANCE. MECHANICAL CONTRACTOR SHALL BE RESPONSIBLE FOR VERIFYING ALL MOUNTING AND SERVICE CLEARANCES WITH ARCHITECTURAL/ENGINEER DOCUMENTS PRIOR TO SUBMISSION OF ANY PRODUCT SUBMITTED OTHER THAN SCHEDULED MANUFACTURER.

PRODUCT SUBSTITUTIONS NOTE:

REQUEST FOR SUBSTITUTIONS OF PRODUCTS NOT LISTED IN THE SCHEDULES OR SPECIFICATIONS WILL ONLY BE CONSIDERED DURING THE PERIOD OF PRIOR TO TEN (10) DAYS BEFORE THE BID DATE. SUBSEQUENT REQUESTS WILL BE CONSIDERED ONLY IN CASE OF PRODUCT UNAVAILABILITY OR OTHER CONDITIONS BEYOND CONTROL OF THE CONTRACTOR. MECHANICAL CONTRACTOR SHALL BE RESPONSIBLE FOR VERIFYING ALL MOUNTING AND SERVICE CLEARANCES WITH ARCHITECTURAL/ENGINEER DOCUMENTS PRIOR TO SUBMISSION OF ANY PRODUCT SUBSTITUTION REQUEST.

PRODUCT SUBSTITUTIONS TRADE COORDINATION NOTE:

MECHANICAL CONTRACTOR SHALL BEAR ALL EXPENSES THAT OTHER TRADES INCUR AS A RESULT OF PHYSICAL MODIFICATIONS REQUIRED BY APPROVED ALTERNATE MECHANICAL EQUIPMENT OTHER THAN ORIGINALLY SPECIFIED OR SCHEDULED.

THE MECHANICAL CONTRACTOR SHALL PROVIDE TEMPORARY CONSTRUCTION FILTERS ON ALL RETURN AIR OPENINGS LEADING TO THE HVAC SYSTEM OF THE SPACE. ADDITIONALLY THE CONTRACTOR SHALL REPLACE THE PERMANENT FILTERS IN THE EXISTING AIR HANDLING UNIT IN OUR SPACE AT THE COMPLETION OF THE PROJECT.

DX CONDENSING OR HEATPUMP CLEARANCE & REFRIGERANT LINE NOTE
MAINTAIN MANUFACTURER'S MINIMUM RECOMMENDED CLEARANCES BETWEEN CONDENSING UNITS AND BUILDING FOR PROPER OPERATION AND MAINTENANCE. RUN AND SIZE REFRIGERANT LINES PER MANUFACTURER'S RECOMMENDATIONS.

EQUIPMENT LOCATION ABOVE CEILING:
MECHANICAL CONTRACTOR SHALL PROVIDE A 3/4" DIAMETER RED LOCATION IDENTIFICATION STICKER AT CEILING T-BAR FRAME DIRECTLY BELOW OR ADJACENT TO ALL SERVICEABLE EQUIPMENT ON THE SERVICE SIDE (I.E.; AIR HANDLING / FAN COIL UNITS, VARIABLE AIR VALVE BOXES, FANS, COMBINATION SMOKE/FIRE DAMPERS, FILTER BANKS, UNIT OR DUCT MOUNTED HEATERS, INDEPENDENT COIL BANKS, SOLENOID VALVE BOXES, F.P. TEST ISOLATION VALVES, DOMESTIC WATER ISOL. VALVES, PRODUCTION WATER ISOL. VALVES BEYOND 10 FT. OF EQUIPMENT, ETC.). ALL OF OF THE ABOVE LISTED MECH. EQUIPMENT MAY NOT BE UTILIZED.

THE CONTRACTORS SHALL COORDINATE ALL REQUIRED ACCESS TO ALL ADJOINING SPACES AND LOCKED SPACES WITH THE GENERAL CONTRACTOR WHO SHALL IN TURN COORDINATE THESE REQUIREMENTS WITH THE BUILDING MANAGEMENT TEAM.

ANY PENETRATIONS OF A FIRE RATED WALL BY ANY MECHANICAL AND PLUMBING PIPING, DUCTWORK (WITHOUT FD/SD). CONDUITS AND CABLING FOR POWER, CONTROLS OR DATA/TELEPHONE MUST BE FIRED SEALED PER U.L. DETAILS ON THIS SHEET. REFER TO ARCHITECTURAL CODE REVIEW PLAN SHEETS FOR EXACT LOCATIONS OF ALL FIRE RATED WALLS.

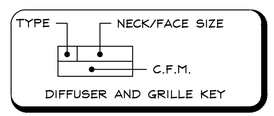

DIFFUSER AND GRILLE KEY

MEP GENERAL NOTES: (TYPICAL FOR PROJECT):

1. THE CONTRACTOR SHALL VISIT THE PREMISES TO THOROUGHLY FAMILIARIZE THEMSELVES WITH ALL DETAILS OF THE WORK, WORKING CONDITIONS, AND VERIFY ALL DIMENSIONS IN THE FIELD. ALSO, THE CONTRACTOR SHALL ADVISE THE ARCHITECT, ENGINEER AND THE OWNER OF ANY DISCREPANCY BEFORE PERFORMING ANY WORK.
2. MATERIALS AND WORKMANSHIP SHALL COMPLY WITH THE CONTRACT DOCUMENTS AND APPLICABLE CODES AND STANDARDS AS DICTATED BY THE AUTHORITY HAVING JURISDICTION. SHOULD THE CONTRACTOR PERFORM ANY WORK THAT DOES NOT COMPLY WITH THE REQUIREMENTS OF APPLICABLE CODES AND STANDARDS, THE CONTRACTOR SHALL BEAR ALL COSTS ARISING IN CORRECTING SUCH DEFECT. APPLICABLE CODES AND STANDARDS SHALL INCLUDE ALL ORDINANCES, UTILITY COMPANY REGULATIONS, AND APPLICABLE REQUIREMENTS OF NATIONAL, STATE, LOCAL CODES, AND STANDARDS.
3. THE CONTRACTORS SHALL BE RESPONSIBLE FOR PROVIDING ALL CONTROLS FOR ALL SYSTEMS THAT WILL COMPLETELY ACCOMPLISH THE IMPLIED OR INTENDED FUNCTIONS OF THE CONTROL SYSTEMS AS SHOWN ON PLANS, INDICATED IN THE SPECIFICATIONS OR REQUIRED BY GOVERNING CODES. APPLICABLE SYSTEMS SHALL INCLUDE BUT ARE NOT LIMITED TO HVAC, LIGHTING, POWER, AND FIRE ALARM.
4. CONTRACTOR SHALL TURN OVER TO OWNER ALL DEMISED EQUIPMENT.
5. PATCH FLOORS, WALLS, CEILINGS, ETC. TO MATCH EXISTING CONDITIONS WHERE CUTTING IS REQUIRED.
6. AN INDEPENDENT CERTIFIED BALANCING OF WATER AND AIR SYSTEMS SHALL BE PROVIDED UNDER THIS CONTRACT FOR ALL SYSTEMS WITHIN DEMOLITION/NEW CONSTRUCTION BOUNDARIES AND ADJACENT AREAS THAT MAY BE AFFECTED BY BALANCING FOR THE PROJECT.
7. ALL DUCTWORK IS SHOWN IN SCHEMATIC FORM. DUCT RISES AND DROPS ARE NOT SHOWN. PROVIDE OFFSETS AS REQUIRED TO MEET SPACE REQUIREMENTS AND TO AVOID INTERFERENCE WITH OTHER TRADES. EACH TRADE SHALL BE RESPONSIBLE FOR COORDINATION WITH OTHER TRADES.
8. PIPING IS SHOWN IN SCHEMATIC FORM. ROUTE PIPING AS REQUIRED FOR CLEARANCE WITH STRUCTURAL CONDITIONS. COORDINATE WITH OTHER TRADES AS REQUIRED. PIPING SHALL BE INSTALLED WITH ADEQUATE SLOPE AS REQUIRED FOR EACH PARTICULAR SYSTEM.
9. DUCTWORK AND ITS CONSTRUCTION WILL BE GALVANIZED SHEET METAL AND CONSTRUCTED ACCORDING TO THE LATEST SMACNA STANDARDS.
10. DUCTWORK SIZES SHOWN ON PLANS ARE CLEAR AIR STREAM DIMENSIONS.
11. PROVIDE RIGID METAL DUCT (WITH NO EXCEPTION) WHERE FIRE WALLS ARE PENETRATED. PROVIDE APPROVED FIRE CAULK EITHER SIDE OF WALL.
12. FIELD VERIFY EXISTENCE OF SMOKE DETECTORS, IF NOT INSTALLED, PROVIDE PROBE SMOKE DETECTORS IN THE SUPPLY AIR DUCTWORK AND RETURN AIR DUCTWORK PRIOR TO MIXING WITH THE OUTSIDE AIR FOR ANY AIR HANDLING EQUIPMENT 2000 CFM OR GREATER. HARDWIRE TO THE MOTOR STARTER AUXILIARY CONTACTS TO SHUT DOWN THE UNIT UPON DETECTION OF SMOKE.
13. MECHANICAL CONTRACTOR SHALL COORDINATE DUCT RUN OUTS EXACTLY OVER THE TOP OF THE SA/RA/EA AIR DEVICES (I.E.: WITHOUT ANY FLEX CRIMPS OR RADICAL TRANSITIONS) WITH THE ARCHITECT'S REFLECTIVE CEILING PLAN, GRIDS, AND THE CEILING SUPPLIER.
14. PROVIDE DOUBLE WALL TURN VANES FOR ALL 90 DEGREE DUCT FITTINGS AND SINGLE WALL TURN VANES FOR DUCT FITTINGS LESS THAN 90 DEGREE AND GREATER THAN 30 DEGREE OR VARIED INTAKE/DISCHARGE AREAS. (SUPPLY, RETURN, OUTSIDE, EXHAUST, RELIEF, HORIZONTAL AND VERTICAL FITTINGS.)
15. INSULATE ALL DUCTWORK PER DIVISION 15 SPECIFICATIONS. (SIZES SHOWN ARE AIR STREAM DIMENSIONS).
16. PROPERLY SUPPORT ALL EQUIPMENT AND PIPING WITHIN THE BUILDING AND PROVIDE ADEQUATE PROVISIONS FOR SLOPE, EXPANSION, AND ANCHORAGE. CONTRACTOR SHALL USE HANGARS, RODS, CLAMPS, AND/OR INSERTS (NO PONDER DRIVEN INSERTS) APPROVED BY UNDERWRITER'S LABORATORIES (U.L.) FOR SERVICE INTENDED, SECURELY SUPPORTED BY AUXILIARY STRUCTURAL MEMBERS WHICH IN TURN ARE SUPPORTED DIRECTLY FROM BUILDING STRUCTURE. DIELECTRICALLY ISOLATE ALL FERROUS TO NON-FERROUS MATERIALS AND SUPPORT POINTS.

REVISIONS

SHELL ONLY

THE SHOPS AT LUCAS

LUCAS, TEXAS 75002

2650 WEST LUCAS ROAD

DONALD F. SOPRANZI AIA, LEED-AP ARCHITECT
10300 N Central Expressway
Suite 450 Dallas, Texas 75231
Telephone: 817-903-6663
dons@dfsarchitect.com

Signature 6-30-20

Sealed 6-30-20

Date June 30, 2020

Scale AS NOTED

Drawn RLN

Job 2020-006

M1.1

The seal on this document was authorized by Richard L. Norris, P.E. 100089 on the date shown below.

June 30, 2020
Project # 1798

R Squared Consulting Engineers, Inc.
Firm Registration: F-15033
Richard L. Norris, P.E.
McKinney, Texas 75070
Cell: 972-814-5007, Office 214-548-5118
RNorris@RSengineers.com

© COPYRIGHT 2020

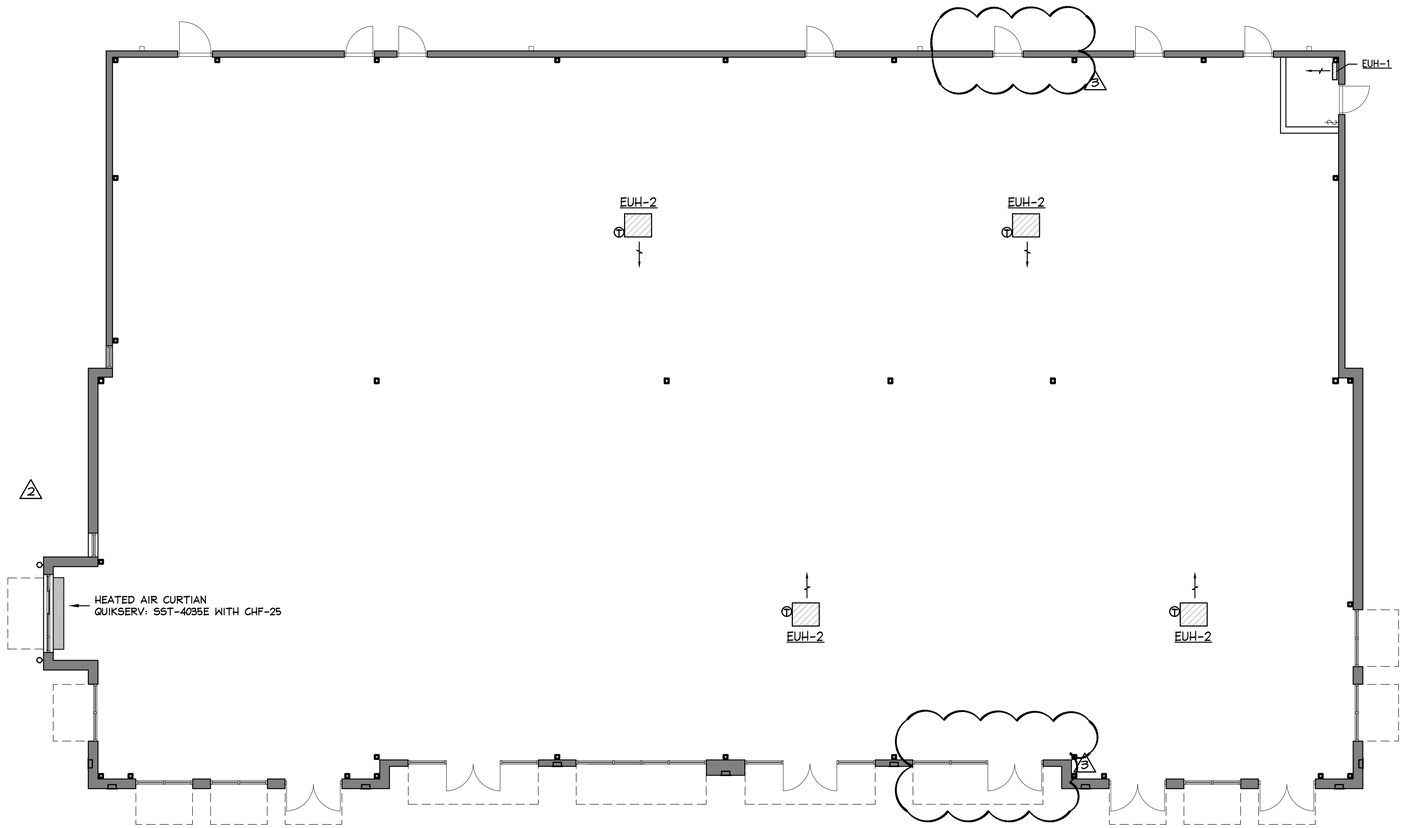

01 FLOOR PLAN—MECHANICAL

SCALE: 1/8"=1'-0"

ELECTRIC UNIT HEATER SCHEDULE

MARK	LOCATION	CFM	KW	OUTPUT (MBH)	VOLT/PH.	MFR/MODEL	REMARKS	WEIGHT (LBS.)
EUH-1	RISER ROOM HEATER	-	1.8	6.1	120/1	BERKO FRA-1812F	SURFACE MOUNT W/ INTEGRAL T-STAT. COORDINATE LOCATION W/ HOUSE PANEL AND FIRE RISER	15
EUH-2	SPACE HEATER	350	5.0	17.1	208/1	BERKO HUHAA-520	SURFACE MOUNT W/ THERMOSTAT MOUNTED ADJACENT UNIT	24

Seal

STATE OF TEXAS
Richard L. Norris
100089
REGISTERED
PROFESSIONAL ENGINEER

The seal on this document was authorized by Richard L. Norris, P.E. 100089 on the date shown below.

Richard L. Norris

June 30, 2020
Project # 1798

R Squared Consulting Engineers, Inc.

Firm Registration: F-15033
4720 Worchester Lane
Mckinney, Texas 75070
Cell: 972-814-5057, Office 214-548-5118
Rnorris@R2engineers.com

© COPYRIGHT 2020

REVISIONS

2 TENANT REVISIONS

3 REVISION

SHELL ONLY

THE SHOPS AT LUCAS

LUCAS, TEXAS 75002

2650 WEST LUCAS ROAD

DONALD F. SOPRANZI
AIA, LEED-AP
ARCHITECT

10300 N Central Expressway
Suite 450 Dallas, Texas 75231
Telephone: 817-903-6663
dons@dfsarchitect.com

Signature 6-30-20

Sealed 6-30-20

Date June 30, 2020

Scale AS NOTED

Drawn RLN

Job 2020-006

M2.1

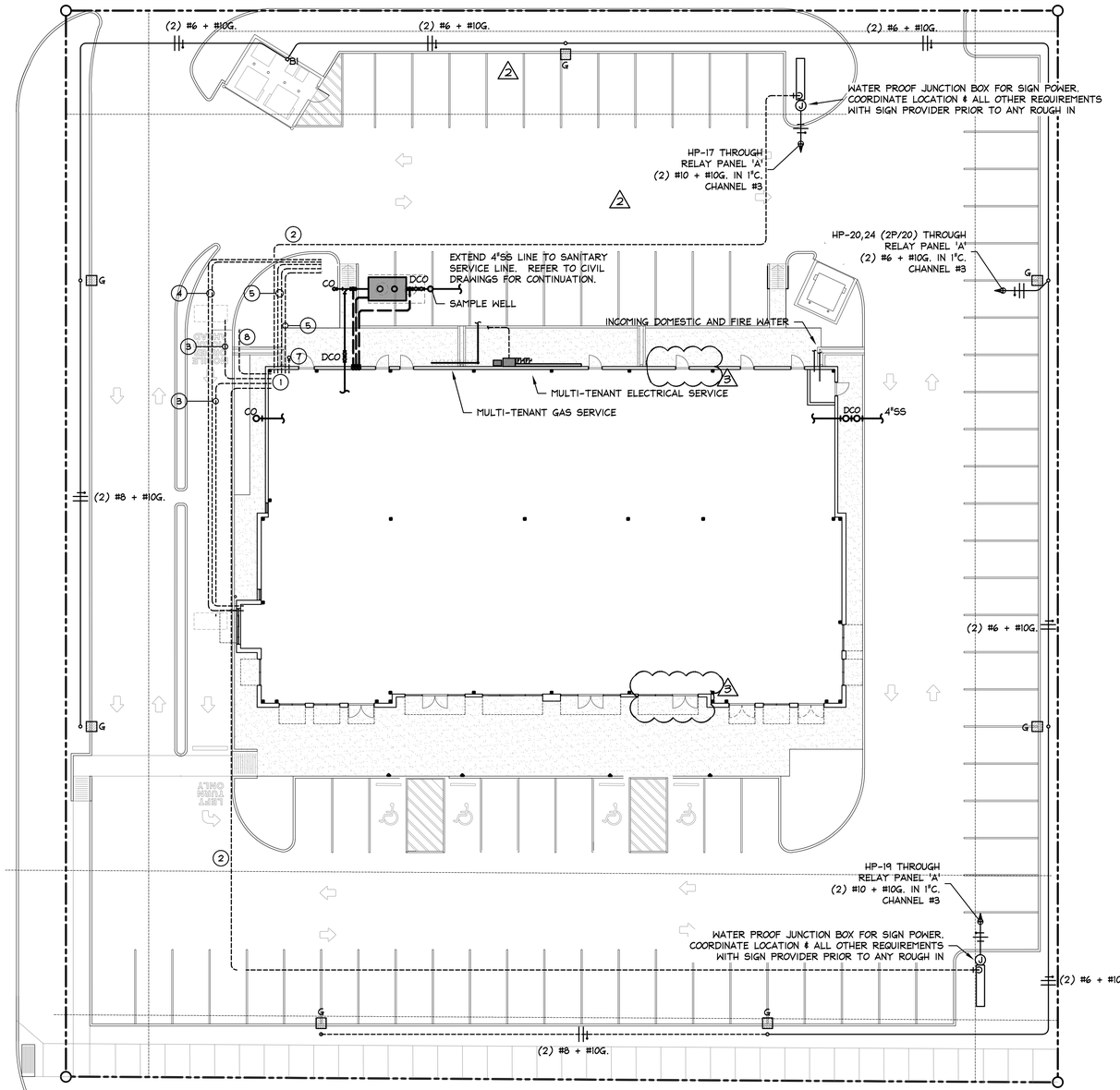

01 MEP SITE PLAN

SCALE: 1/16"=1'-0"

2 NOTES BY SYMBOL:

1. CONDUITS WITH LABELED NYLON PULL CORDS STUBBED UP ABOVE CEILING ABOVE THE ELECTRICAL PANELS.
2. (1) 2" CONDUIT WITH LABELED NYLON PULL CORD TO MONUMENT SIGN. COORDINATE PRECISE REQUIREMENTS AT MONUMENT SIGN WITH ARCHITECT PRIOR TO ANY ROUGH IN.
3. (1) 1" CONDUIT WITH LABELED NYLON PULL CORD STUBBED UP AND CAPPED FOR FUTURE LOOP DETECTOR. COORDINATE ALL REQUIREMENTS WITH ARCHITECT PRIOR TO ROUGH IN.
4. (2) 2" CONDUITS WITH LABELED NYLON PULL CORD STUBBED UP AND CAPPED AT FUTURE OCS / SPEAKER POST FROM DRIVE THROUGH WINDOW.
5. (1) 1" CONDUIT & (1) 2" CONDUIT WITH LABELED NYLON PULL CORDS STUBBED UP FOR FUTURE MENU BOARD. COORDINATE ALL REQUIREMENTS WITH ARCHITECT PRIOR TO ROUGH IN.
6. (1) 2" CONDUIT WITH LABELED NYLON PULL CORD STUBBED UP & CAPPED AT FUTURE OCS / SPEAKER POST. COORDINATE ALL REQUIREMENTS WITH ARCHITECT PRIOR TO ANY ROUGH IN.
7. (1) 2" CONDUIT WITH LABELED NYLON PULL CORD STUBBED UP AND CAPPED FOR FUTURE USE. COORDINATE DESIRED LOCATION PRIOR TO ROUGH IN.
8. (1) 1" CONDUIT WITH LABELED NYLON PULL CORD STUBBED UP AND CAPPED AT FUTURE CLEARANCE SIGN. COORDINATE ALL REQUIREMENTS WITH THE ARCHITECT PRIOR TO AND ROUGH IN.

Seal
STATE OF TEXAS
Richard L. Norris
103989
LICENSED
PROFESSIONAL ENGINEER
PRELIMINARY
Not for construction
Released for permit on this date. Seal was authorized by Richard L. Norris, P.E. 103989 on the date shown below.
Richard L. Norris
June 30, 2020

Project # 1798

R Squared Consulting Engineers, Inc.
Firm Registration: F-15033
4102 Bentwater Lane
McKinney, Texas 75070
Cell: 972-814-5097, Office 214-548-5118
Rnorris@R2engineers.com

© COPYRIGHT 2020

REVISIONS

2 TENANT REVISIONS

3 REVISION

SHELL ONLY

THE SHOPS AT LUCAS

LUCAS, TEXAS 75002

2650 WEST LUCAS ROAD

10300 N Central Expressway
Suite 450 Dallas, Texas 75231
Telephone: 817-903-6663
dons@dfsarchitect.com

DONALD F. SOPRANZI
AIA, LEED AP
ARCHITECT

Signature 6-30-20

Sealed 6-30-20

Date June 30, 2020

Scale AS NOTED

Drawn RLN

Job 2020-006

MEP1.1

MEP ABBREVIATIONS

ABV.	ABOVE
AC	ALTERNATING CURRENT
A/C	AIR CONDITIONER
AFC	ABOVE FINISHED CEILING
AFF	ABOVE FINISHED FLOOR
AFG	ABOVE FINISHED GRADE
AG	ABOVE GRADE AND GFI
AHAP	AS HIGH AS POSSIBLE
AHU	AIR HANDLING UNIT
ALT.	ALTERNATE
AMB.	AMBIENT TEMPERATURE (°F)
AMP.	AMPERE
APPROX.	APPROXIMATELY
ARCH.	ARCHITECTURAL
AVG.	AVERAGE
B	BOILER
B.G.	BELOW GRADE
BMS	BUILDING MANAGEMENT SYSTEM
BRD	BAROMETRIC RELIEF DAMPER
BTU	BRITISH THERMAL UNIT
CD	CONSTRUCTION DOCUMENTS
CFH	CUBIC FEET PER HOUR
CFM	CUBIC FEET PER MINUTE
CH.	CHILLER
CHEM.	CHEMICAL
CHP	CHILLED WATER PUMP
CKT.	CIRCUIT
CLG.	CEILING
CMPR.	COMPRESSOR
CT	COOLING TOWER
CWP	CONDENSER WATER PUMP
CU	CONDENSING UNIT
DB	DRY BULB
DEFL.	DEFLECTION
DEG. F	DEGREES FAHRENHEIT
DET.	DETAIL
DD	DESIGN DEVELOPMENT
DIA.	DIAMETER
DISC.	DISCONNECT SWITCH
DIM.	DIMENSION
EA	EXHAUST AIR
EDB	ENTERING DRY BULB
EF	EXHAUST FAN
ELEC.	ELECTRICAL
ELEV.	ELEVATION
EMCS.	ENERGY MGMT. CONTROL SYSTEM
E.S.P.	EXTERNAL STATIC PRESS. (IN. W.G.)
EWB	ENTERING WET BULB
EWT	ENTERING WATER TEMPERATURE
EXH.	EXHAUST
EXIST.	EXISTING
F/A	FREE AREA OPENING (SQ. FT.)
FCU	FAN COIL UNIT
FHP	FRACTIONAL HORSE POWER
FLR.	FLOOR
FPI	COIL FINS PER INCH.
FPM	FEET PER MINUTE
FPS	FEET PER SECOND
FT.	FOOT OR FEET
GFI	GROUND FAULT INTERRUPTER
GPM	GALLONS PER MINUTE
HD.	HEAD
HOA	HANDS/OFF/AUTO. MOTOR STARTER
HP	HORSE POWER
HPU	HEAT PUMP UNIT
HR.	HOUR(S)
HT.	HEIGHT
HTG.	HEATING
HTR.	HEATER
HVAC	HEAT,VENT AND AIR CONDITIONING
HWP	HOT WATER PUMP
HX	HEAT EXCHANGER
HZ.	FREQUENCY (HERTZ)
ID	INSIDE DIAMETER OR DIMENSION
IN.	INCHES
KW	KILOWATT
KWH	KILOWATT HOUR
LAT	LEAVING AIR TEMPERATURE
LWT	LEAVING WATER TEMPERATURE
MAX.	MAXIMUM
MCA	MINIMUM CURRENT AMPS.
MOCP	MAX. OVER CURRENT PROTECTION
MBH	1000 BTU PER HOUR
MECH.	MECHANICAL
MFR.	MANUFACTURER
MIN.	MINIMUM
MVD	MANUAL VOLUME DAMPER
N/A	NOT APPLICABLE
NC	NOISE CRITERIA
NIC	NOT IN CONSTRUCTION
NK	NECK DIMENSION
NO.	NUMBER
OA	OUTSIDE AIR
OAR	OWNERS AUTHORIZED REPRESENTATIVE
OBD	OPPOSED BLADE DAMPER
OD	OUTSIDE DIAMETER
ORIG.	ORIGINAL
P.D.	PRESSURE DROP (FT)
PH.	PHASE
PMB	POWERED MIXING BOX
PLBG.	PLUMBING
PNL.	PANEL
PRESS.	PRESSURE
RA	RETURN AIR
RAG	RETURN AIR GRILLE
RD.	RADIUS
REF.	REFERENCE
RPM	REVOLUTIONS PER MINUTE
RTU	ROOF TOP UNIT
S/S	SINGLE SPEED MOTOR
S/S/S	START/STOP/STATUS
SA	SUPPLY AIR
SAG	SUPPLY AIR GRILLE
SDC	STAND ALONE DIGITAL CONTROLLER
SEER	SEASON ENERGY EFFICIENCY RATIO
SENS.	SENSIBLE
SP	STATIC PRESSURE
SQ.	SQUARE
STR.	MOTOR STARTER
TEMP.	TEMPERATURE
T.S.P.	TOTAL STATIC PRESSURE (IN. W.G.)
UH	UNIT HEATER
UNO	UNLESS NOTED OTHERWISE
V	VOLT
VAV	VARIABLE AIR VALVE
VEL.	VELOCITY
W	WATT
W/	WITH
W/O	WITHOUT
W.G.	WATER GUAGE
WB	WET BULB
WP	WEATHERPROOF
WPD	WATER PRESSURE DROP
WPG	WEATHERPROOF GFI
XFMR.	TRANSFORMER

PLUMBING SYMBOL LEGEND

	SANITARY SEWER (SS)
	SANITARY VENT (V)
	STORM DRAIN (SD)
	STORM OVERFLOW DRAIN (OD)
	GREASE WASTE (GW)
	ACID WASTE (AW)
AV	ACID VENT (AV)
	DOMESTIC COLD WATER (CW)
	DOMESTIC HOT WATER (110°F HW)
	DOMESTIC HOT WATER (140°F HW)
	DOMESTIC HOT WATER RETURN (RECIRC)
	DOMESTIC HOT WATER RETURN (140°F RECIRC.)
	FIRE LINE (F)
	NATURAL GAS (G)
	COMPRESSED AIR (A)
	OXYGEN
	VACUUM
	NITROGEN (N)
	NITROUS OXIDE (NO)
	RISER DOWN (ELBOW)
	RISER UP (ELBOW)
	BRANCH-BOTTOM CONNECTION
	BRANCH-TOP CONNECTION
	TEE CONNECTION
	90° ELBOW
	CAP ON END OF PIPE
	UNION
	FLOOR CLEANOUT
	CLEANOUT PLUG
	BALL VALVE
	PRESSURE REDUCING VALVE
	CHECK VALVE
	GAS COCK
	TEMPERATURE-PRESSURE RELIEF VALVE
	THERMOMETER
	BALANCING VALVE
	DIRECTION OF SLOPE
	DIRECTION OF FLOW
	OUTLET (SPECIFY TYPE)
A	COMPRESSED AIR OUTLET
N.F.W.H.	NON-FREEZE WALL HYDRANT
H.B.	HOSE BIBB
	FLOOR SINK
	FLOOR DRAIN
H.D.	HUB DRAIN
R.D.	ROOF DRAIN
O.D.	OVERFLOW DRAIN
	EXISTING PIPING TO BE REMOVED
	NEW CONNECTION TO EXISTING

NOTE: NOT ALL SYMBOLS SHOWN ARE NECESSARILY USED.

HVAC & PLUMBING, VALVE & FITTINGS SYMBOLS

	SOIL OR WASTE
SD	STORM
	VENT
	COLD WATER
	HOT WATER
	HOT WATER RECIRCULATION
G	GAS
CHS/R	CHILLED WATER SUPPLY/RETURN
PCHS/R	PRODUCTION CHILLED WATER SUPPLY/RETURN
HWS/R	HOT WATER SUPPLY/RETURN
CS/R	CONDENSER WATER SUPPLY/RETURN
RS/RL	REFRIGERANT SUCTION AND LIQUID LINES
CD	CONDENSATE DRAIN LINE
	LOW PRESSURE STEAM CONDENSATE
	MEDIUM PRESSURE STEAM CONDENSATE
	HIGH PRESSURE STEAM CONDENSATE
	LOW PRESSURE STEAM SUPPLY (0 TO 15 PSIG)
	MEDIUM PRESSURE STEAM SUPPLY (15 TO 100 PSIG)
	HIGH PRESSURE STEAM (ABOVE 100 PSIG)
	FLOAT AND THERM. TRAP
	BUCKET STEAM TRAP
	GATE VALVE
BV	BALANCING VALVE
CO	FLOOR CLEAN OUT
CO	CLEAN OUT
F	FIRE LINE
	BRANCH LINE WITH SPRINKLER HEADS
	FLOOR DRAIN
	HUB DRAIN
D.S.	DOWN SPOUT
F.H.C.	FIRE HOSE CABINET
V.T.R.	VENT THRU ROOF
R.D.	ROOF DRAIN
	CHECK VALVE
	OS & Y VALVE
	GLOBE VALVE
	BUTTERFLY VALVE
	BALL VALVE
	SOLENOID VALVE
	PRESSURE REDUCING VALVE
	PRESSURE RELIEF VALVE
	CONTROL, 2 WAY VALVE
	CONTROL, 3 WAY VALVE
	STRAINER & BLOW OFF VALVE
	PRESSURE GAUGE & COCK
OR	UNION OR COMPANION FLANGES
	PLUG VALVE
	THERMOMETER
	PRESSURE & TEMPERATURE TAP (PETES PLUG)
T	THERMOSTAT
H	HUMIDISTAT
FM	FLOW METER
	ANCHOR (PIPE)
	EXPANSION JOINT
	MANUAL AIR VENT
	AUTOMATIC AIR VENT
	HOSE END DRAIN
	HOSE BIBB
	THERMOMETER & WELL
T/P	TEMPERATURE SENSOR
FF	FLOW SWITCH
	PRESSURE SENSOR

NOTE: NOT ALL SYMBOLS SHOWN ARE NECESSARILY USED.

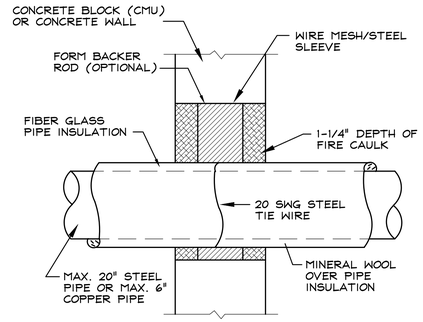

U.L. #WL5056

02 INSULATED PIPE FIRE WALL PENETRATION (CONCRETE BLOCK)

SCALE: N.T.S.

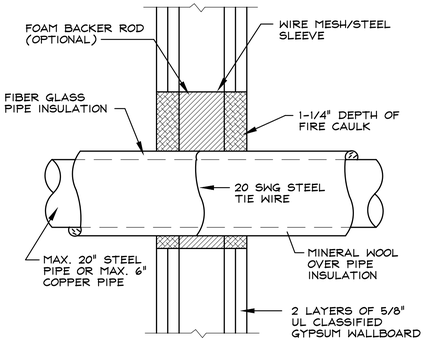

U.L. #WL5056

01 INSULATED PIPE FIRE WALL PENETRATION (DRY WALL)

SCALE: N.T.S.

MATERIALS IN OPEN AIR PLENUM:
ALL MEP PIPING, CONDUITS, OPEN CONDUCTORS, DUCT WORK AND OTHER MATERIALS THAT ARE TO BE INSTALLED IN THE OPEN AIR PLENUM SHALL BE AIR PLENUM RATED. NO EXCEPTION.

THE CONTRACTORS SHALL COORDINATE ALL REQUIRED ACCESS TO ALL ADJOINING SPACES AND LOCKED SPACES WITH THE GENERAL CONTRACTOR WHO SHALL IN TURN COORDINATE THESE REQUIREMENTS WITH THE BUILDING MANAGEMENT TEAM.

ANY PENETRATIONS OF A FIRE RATED WALLS BY ANY MECHANICAL AND PLUMBING PIPING, MUST BE FIRED SEALED PER U.L. DETAILS ON THIS SHEET. REFER TO ARCHITECTURAL CODE REVIEW PLAN SHEETS FOR EXACT LOCATIONS OF ALL FIRE RATED WALLS.

PRODUCT SUBMITTAL DATA NOTE:

THIS CONTRACTOR SHALL PREPARE AND PROVIDE ALL EQUIPMENT SUBMITTALS 30 DAYS AFTER PROJECT CONTRACT IS AWARDED.

UPON RECEIPT OF THE SUBMITTAL DATA (THROUGH NORMAL CHANNELS), THE ENGINEER SHALL HAVE ××TEN (10)××u WORKING DAYS TO REVIEW THE DATA FOR COMPLIANCE. MECHANICAL CONTRACTOR SHALL BE RESPONSIBLE FOR VERIFYING ALL MOUNTING AND SERVICE CLEARANCES WITH ARCHITECTURAL/ENGINEER DOCUMENTS PRIOR TO SUBMISSION OF ANY PRODUCT SUBMITTED OTHER THAN SCHEDULED MANUFACTURER.

PRODUCT SUBSTITUTIONS TRADE COORDINATION NOTE:

THE PLUMBING CONTRACTOR SHALL BEAR ALL EXPENSES THAT OTHER TRADES INCUR AS A RESULT OF PHYSICAL MODIFICATIONS REQUIRED BY APPROVED ALTERNATE PLUMBING EQUIPMENT AND PIPING OTHER THAN ORIGINALLY SPECIFIED OR SCHEDULED.

GENERAL NOTES

(APPLICABLE TO ALL PLUMBING SHEETS):

1. PROVIDE ALL MATERIALS, LABOR AND EQUIPMENT AS REQUIRED TO INSTALL COMPLETE AND OPERABLE PIPING SYSTEMS AS INDICATED ON THE DRAWINGS, AS SPECIFIED, AS REQUIRED BY ALL APPLICABLE CODES AND PER MANUFACTURER'S RECOMMENDATIONS.
2. ALL OPENINGS IN FIRE RATED WALLS FOR DUCTWORK, PIPING, CONDUITS, ETC. SHALL BE FIRE STOPPED WITH A FIRE CAULK SIMILAR TO 3M OR APPROVED EQUAL. REFER TO MECHANICAL DRAWINGS FOR UL WALL PENETRATION DETAILS.
3. ALL PLUMBING PIPING INSTALLED IN PLENUM AIR SPACES SHALL BE RATED FOR USE IN PLENUM AIR SPACES. CPVC PIPE AND FITTINGS MAY BE INSTALLED IF APPROVED BY LOCAL BUILDING CODES AND AUTHORITIES HAVING JURISDICTION. PVC PIPE & FITTINGS ARE PROHIBITED IN PLENUM AIR SPACES.
4. SLOPE OF ALL HORIZONTAL DRAINAGE PIPING (SANITARY, GREASE WASTE, ETC.) AS FOLLOWS UNLESS NOTED OTHERWISE ON PLANS:

SIZE	SLOPE
2 1/2" OR LESS	1/4 IN/FT
3" AND LARGER	1/8 IN/FT

   SLOPE FOR ALL HORIZONTAL GREASE WASTE SHALL BE 1/4" PER FOOT.
5. ALL HORIZONTAL VENT PIPING SHALL BE GRADED AS TO DRAIN BACK TO THE DRAINAGE PIPE BY GRAVITY.
6. REFER TO ARCHITECTURAL DRAWINGS FOR EXACT LOCATION AND ELEVATION OF FLOOR DRAINS. CONTRACTOR SHALL COORDINATE LOCATIONS OF FLOOR DRAINS IN MECHANICAL ROOMS WITH HVAC DRAWINGS.
7. PROVIDE SHUT-OFF VALVES IN ALL DOMESTIC WATER PIPING SYSTEM BRANCH LINES.
8. PROVIDE CLEANOUTS IN HORIZONTAL DRAINAGE PIPING AT ENDS OF RUNS, AT CHANGES IN DIRECTION GREATER THAN 45°, NEAR THE BASE OF STACKS, EVERY 50 FEET IN HORIZONTAL RUNS AND ELSEWHERE AS INDICATED. CLEANOUTS SHALL BE THE SAME NOMINAL SIZE AS THE PIPE THEY SERVE UP TO 4 INCHES. FOR PIPES LARGER THAN 4 INCHES NOMINAL SIZE, THE MINIMUM SIZE OF THE CLEANOUT SHALL BE 4 INCHES.
9. CONTRACTOR SHALL BE RESPONSIBLE FOR MODIFICATION OF EXISTING FIRE PROTECTION PIPING AND RELOCATING SPRINKLER HEADS. CONTRACTOR SHALL RELOCATE EXISTING SPRINKLERS TO ACCOMMODATE NEW CONSTRUCTION, ALSO PROVIDE NEW SPRINKLER HEADS AS REQUIRED. CONTRACTOR SHALL RELOCATE EXISTING PIPING AND PROVIDE NEW PIPING AS REQUIRED. SPRINKLER SYSTEM SHALL CONFORM TO STATE BOARD OF INSURANCE, NFPA, LOCAL AND OWNER'S INSURANCE COMPANY REQUIREMENTS. CONTRACTOR SHALL CONTACT OWNER'S INSURANCE COMPANY TO CONFIRM ALL OF THEIR REQUIREMENTS PRIOR TO SUBMITTING THEIR BID. REFER TO MECHANICAL SPECIFICATIONS FOR ADDITIONAL REQUIREMENTS.
10. CONTRACTOR SHALL COORDINATE INSTALLATION OF GAS SERVICE AND METER WITH GAS COMPANY. CONTRACTOR SHALL PAY ALL FEES, PERMITS AND CHARGES ASSOCIATED WITH THE INSTALLATION OF BOTH THE GAS METER AND SERVICE.
11. CONTRACTOR SHALL REFER TO ARCHITECTURAL DRAWINGS FOR LOCATIONS OF ALL ADA PLUMBING FIXTURES. CONTRACTOR SHALL PROVIDE OFFSET P-TRAP AND MOUNT ADA PLUMBING FIXTURES TO COMPLY WITH (ADA) AND TEXAS ACCESSIBILITY STANDARDS REQUIREMENTS.
12. CONTRACTOR SHALL REFER TO HVAC DRAWINGS FOR ROUTING OF HVAC UNIT CONDENSATE DRAIN LINES. CONTRACTOR SHALL PROVIDE INDIRECT DRAIN WITH TRAP PRIMER AS REQUIRED. TRAP PRIMER TO BE LOCATED BEHIND 12"x12" ACCESS PANEL. ACCESS PANEL LOCATIONS SHALL BE COORDINATED WITH ARCHITECT PRIOR TO ROUGH-IN.
13. ALL LAVATORIES AND SINKS SHALL BE PROVIDED WITH A THERMOSTATIC MIXING VALVE (TMV) AS SPECIFIED IN THE PLUMBING FIXTURE SCHEDULE.
14. ALL PLUMBING PIPING INSTALLED IN PLENUM AIR SPACES SHALL BE RATED FOR USE IN PLENUM AIR SPACES AND MUST BE APPROVED BY LOCAL BUILDING CODES AND LOCAL AUTHORITIES HAVING JURISDICTION.

STATE OF TEXAS
Richard L. Norris
100089
LICENSED
PROFESSIONAL ENGINEER
The seal on this document was authorized by Richard L. Norris, P.E. 100089 on the date shown below.

June 30, 2020
Project # 1798

R Squared Consulting Engineers, Inc.
Firm Registration: F-15033
4705 Westchester Lane,
McKinney, Texas 75070
Cell: 972-814-5007, Office 214-548-5118
rnorris@Rsqengineers.com

©COPYRIGHT 2020

REVISIONS

SHELL ONLY
THE SHOPS AT LUCAS
2650 WEST LUCAS ROAD
LUCAS, TEXAS 75002

DONALD F. SOPRANZI AIA, LEED AP ARCHITECT
10300 N Central Expressway
Suite 450 Dallas, Texas 75231
Telephone: 817-903-6663
dons@dfsarchitect.com

Signature 6-30-20
Sealed 6-30-20
Date June 30, 2020
Scale AS NOTED
Drawn RLN
Job 2020-006

P1.1

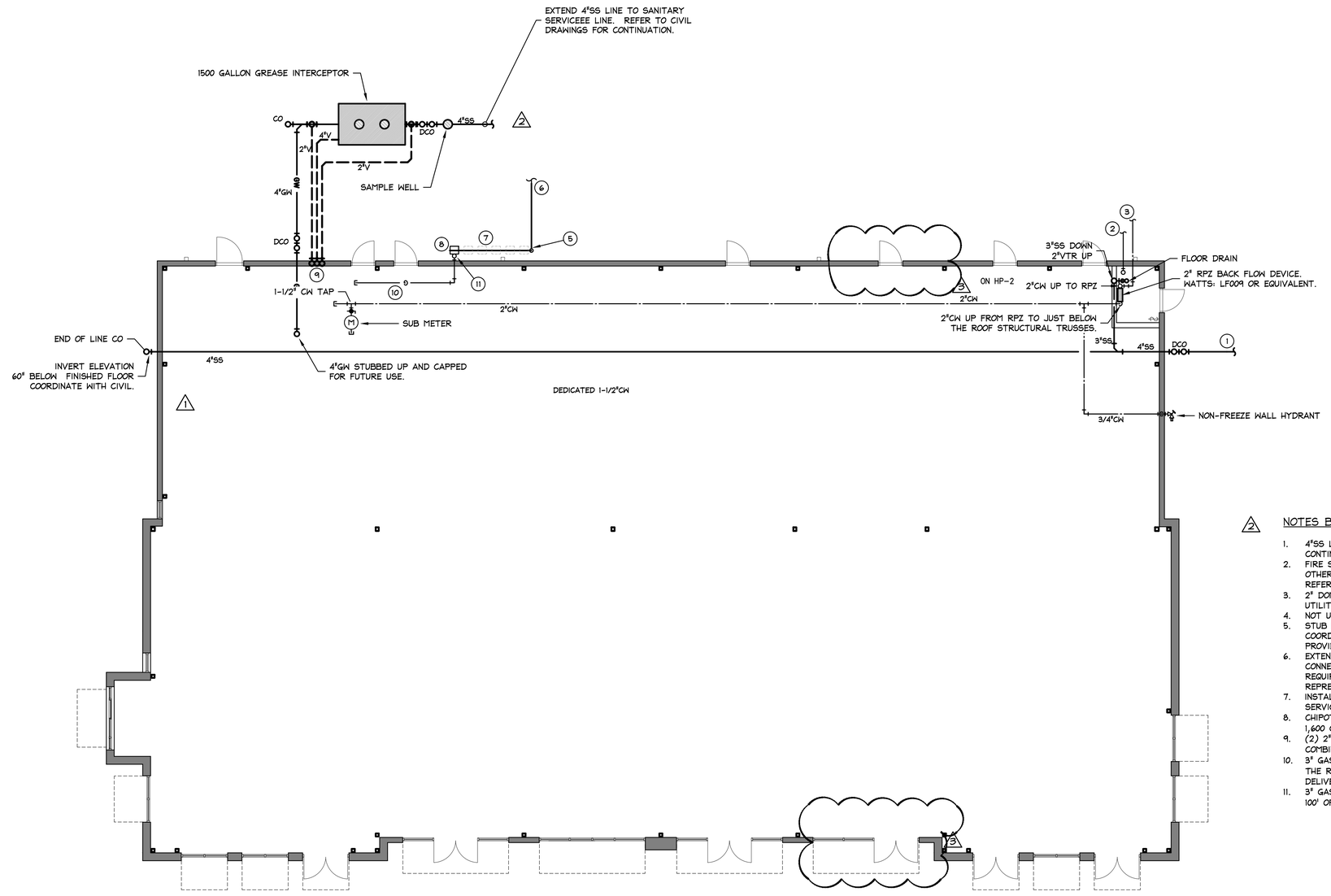

01 FLOOR PLAN–PLUMBING

SCALE: 1/8"=1'-0"

2 NOTES BY SYMBOL:

1. 4"SS LINE OUT TO CITY MAIN. REFER TO CIVIL UTILITY LAN FOR CONTINUATION.
2. FIRE SPRINKLER WATER LINE IN TO FIRE RISER. SIZING AND ALL OTHER REQUIREMENTS TO BE DETERMINED BY SPRINKLER DESIGNER. REFER TO CIVIL UTILITY PLAN FOR CONTINUATION.
3. 2" DOMESTIC WATER FOR TENANT USE IN TO 2" RPZ. REFER TO CIVIL UTILITY PLAN FOR CONTINUATION.
4. NOT USED.
5. STUB UP GAS FOR FUTURE TENANT CONNECTION TO GAS SERVICE. COORDINATE ALL REQUIREMENTS ON SITE WITH THE GAS UTILITY PROVIDERS REPRESENTATIVE PRIOR TO ANY ROUGH IN.
6. EXTEND GAS PIPING PER THE GAS PROVIDER TO GAS UTILITY CONNECTION POINT. COORDINATE ROUTING AND ALL OTHER REQUIREMENTS ON SITE WITH THE GAS UTILITY PROVIDER REPRESENTATIVE PRIOR TO ROUGH IN.
7. INSTALL GAS MANIFOLD FOR FUTURE TENANT CONNECTION TO GAS SERVICE. ESTIMATED GAS LOAD OF 7500 CFH @ 5LB.
8. CHIPOTLE'S GAS SERVICE WITH AN ESTIMATED MAXIMUM GAS LOAD OF 1,600 CFH TO BE DELIVERED AT 7" OF WC.
9. (2) 2" VENT PIPES & (1) 4" VENT PIPE UP TO +48" AFF AND THEN COMBINED INTO A SINGLE 4" VTR.
10. 3" GAS LINE EXTENDED FROM METER INTO THE SPACE JUST BELOW THE ROOF TRUSSES AND CAPPED FOR FUTURE DESIGN AT 7" W.C. OF DELIVERY PRESSURE.
11. 3" GAS LINE UP AN INTO SPACE WITH 1600CFH OF GAS @ 7" W.C. WITH 100' OF DEVELOPED LENGTH.

Seal
STATE OF TEXAS
Richard L. Norris
100089
REGISTERED
PROFESSIONAL ENGINEER
The seal on this document was authorized by Richard L. Norris, P.E. 100089 on the date shown below.
Richard L Norris
June 30, 2020
Project # 1798
R Squared Consulting Engineers, Inc.
Firm Registration: F-15033
4722 Worchester Lane
McKinney, Texas 75070
Cell: 972-814-5057, Office 214-548-5118
Rnorris@RSengineers.com

© COPYRIGHT 2020

REVISIONS

2 TENANT REVISIONS

3 REVISION

SHELL ONLY

THE SHOPS AT LUCAS

2650 WEST LUCAS ROAD LUCAS, TEXAS 75002

DONALD F. SOPRANZI MA, LEED AP ARCHITECT

10300 N Central Expressway
Suite 450 Dallas, Texas 75231
Telephone: 817-903-6663
dons@dfsarchitect.com

Signature	6-30-20
Sealed	6-30-20
Date	June 30, 2020
Scale	AS NOTED
Drawn	RLN
Job	2020-006

P2.1

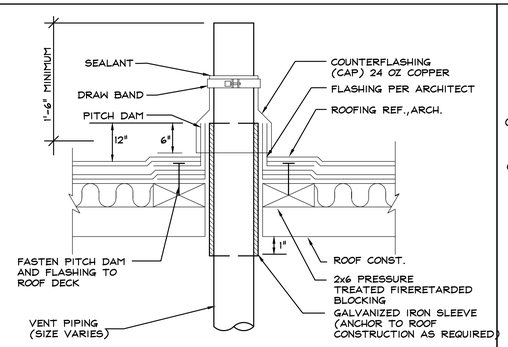

04 VENT THROUGH ROOF DETAIL

SCALE: NTS

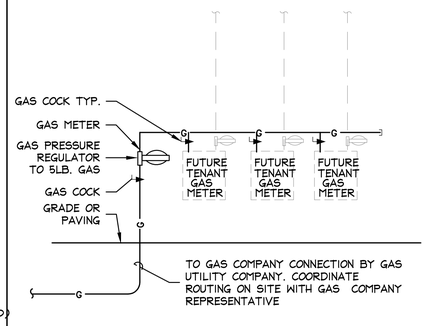

03 GAS HEADER DETAIL

SCALE: NTS

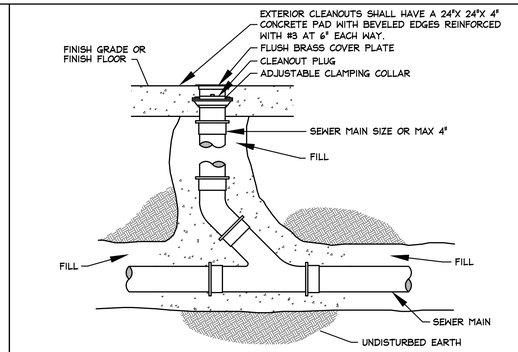

02 CLEANOUT

SCALE: 09

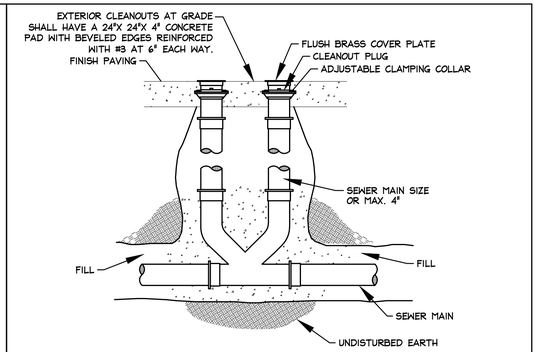

01 TWO WAY CLEANOUT

SCALE: 10

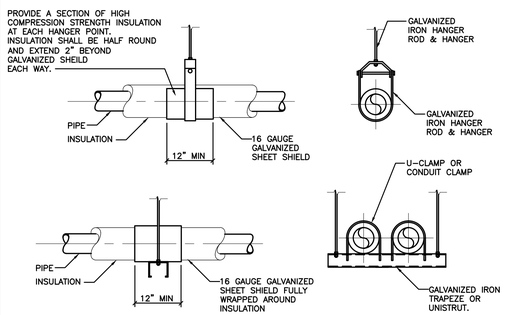

08 PIPE HANGER DETAILS

SCALE: NTS

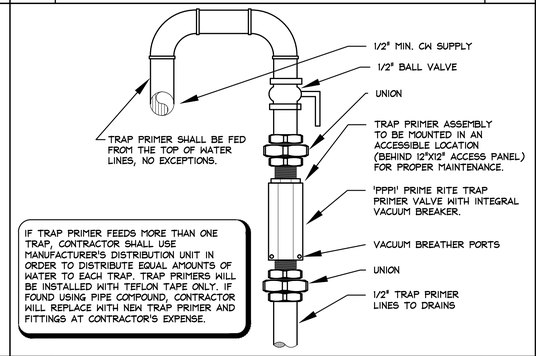

07 TRAP PRIMER

SCALE: NTS

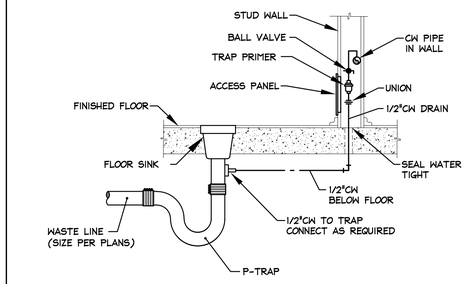

06 TRAP PRIMER TO FLOOR SINK

SCALE: NTS

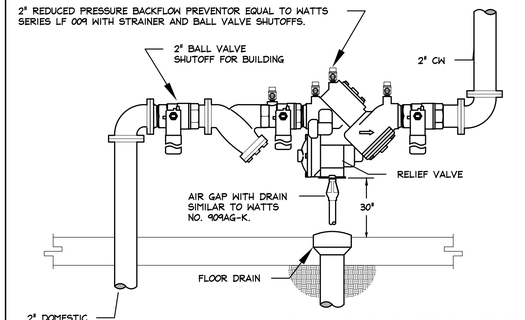

05 REDUCED PRESSURE BACKFLOW PREVENTOR

SCALE: NTS

PLUMBING FIXTURE SCHEDULE

DESIG.	DESCRIPTION	MANUFACTURER & MODEL NUMBER	SAN. SWR SIZE	VENT SIZE	COLD WTR SIZE	HOT WTR SIZE	REMARKS
FD	FLOOR DRAIN	WATTS #FD-100-A5 OR APPROVED EQUAL	3"	2"	1/2"	-	CAST IRON FLOOR DRAIN, TWO PIECE BODY WITH DOUBLE DRAINAGE FLANGE, INVERTIBLE NON-PUNCTURING FLASHING COLLAR, WEEPHOLES, BOTTOM OUTLET AND ADJUSTABLE STRAINER BACKET, 1/2" TRAP PRIMER CONNECTION AND SECURED GRATE WITH VANDAL-PROOF SCREWS. VERIFY ROUND OR SQUARE TOP STRAINER WITH ARCHITECT.
FS	FLOOR SINK	SIOUX CHIEF #861-3PXW	3"	2"	1/2"	-	FLOOR SINK, SCHEDULE 40 HUB PVC HUB CONNECTION, STAINLESS STEEL MESH DEBRIS BASKET, 1/2" TRAP PRIMER CONNECTION AND SECURED GRATE WITH VANDAL-PROOF SCREWS.
FCO	INTERIOR FLOOR CLEANOUT	SIOUX CHIEF #852-3LNR	-	-	-	-	ADJUSTABLE CLEANOUT WITH 3" MIP THREAD CONNECTION, ROUND NICKLE-BRONZE RING AND COVER TOP WITH VANDAL-PROOF SCREWS, AND SHALL INCLUDE SLOTTED POLYPROPYLENE CLEANOUT PLUG.
CO	EXTERIOR CLEANOUT	JOSAM #57000-SD-22-VP	-	-	-	-	COATED CAST IRON, LEVEL EZE EXTERIOR CLEANOUT, TAPER THREADED BRONZE CLEANOUT PLUG AND ADJUSTABLE ABS HOUSING WITH HEAVY SCORIATED SECURED ROUND SATIN NIKALOY TOP WITH VANDAL PROOF SCREWS.
TP	TRAP PRIMER	PPP #P2	-	-	1/2"	-	FLEXIBLE TUBE MADE OF ELASTOMERIC TM MATERIAL THAT IS TREATED TO ROLL UP WHEN WATER IS NOT PASSING THROUGH BUT IS FLEXIBLE ENOUGH TO OPEN AND PERMIT WATER FLOW, FROM AN INTERMITTENT DRIP TO FIRE-HOSE TYPE FLOWS. SEE NOTE 8.
NFWH	NON-FREEZE WALL HYDRANT	WOODFORD B65	-	-	3/4"	-	CHROME RECESSED WALL HYDRANT WITH LOCKING COVER, NON-FREEZE TYPE
WH	WATER HAMMER ARRESTOR	JAY R. SMITH	-	-	AS SHOWN	-	MACHINED FROM C69300 ECO CORROSION RESISTANT BRASS, PISTON OPERATED, CONTAINS NO SPRINGS OR DIAPHRAGMS,EASILY ADJUSTED TO HIGH OR LOW PRESSURE, WILL PRIME 1 OR 2 FLOOR DRAINS.

NOTES:

1. WALL HUNG PLUMBING FIXTURES SHALL BE SUPPORTED USING ADJUSTABLE CONCEALED ARM FLOOR MOUNTED SUPPORTS WITH RECTANGULAR STRUCTURAL STEEL UPRIGHTS UTILIZING HEAVY-DUTY FEET BOLTED TO THE FLOOR AND SUPPORT HEADERS.
2. CONTRACTOR SHALL REFER TO ARCHITECTURAL DRAWINGS FOR MOUNTING HEIGHTS AND LOCATIONS OF ALL PLUMBING FIXTURES INCLUDING HANDICAPPED (ADA) FIXTURES. CONTRACTOR SHALL COORDINATE ADA REQUIREMENTS WITH ARCHITECT PRIOR TO INSTALLATION OF PLUMBING FIXTURES.
3. FLUSH VALVE FOR THE HANDICAPPED PLUMBING FIXTURES SHALL BE INSTALLED WHERE THE HANDLE FACES INTO THE OPEN AREA WITHIN THE STALL. (TOWARDS THE CENTER OF STALL)
4. CONTRACTOR SHALL PROVIDE FLEXIBLE MOLDED INSULATION SIMILAR TO TRUEBRO 'LAV GUARD' ON P-TRAPS, WATER SUPPLIES AND VALVES SERVING ADA PLUMBING FIXTURES. CONTRACTOR SHALL PROVIDE OFFSET P-TRAPS ON ADA FIXTURES.
5. CONTRACTOR SHALL INSTALL ALL PLUMBING FIXTURES SHOWN ON THE ARCHITECTURAL, KITCHEN, PLUMBING AND OWNER FURNISHED DRAWINGS.
6. CONTRACTOR SHALL FURNISH AND INSTALL ON EACH PLUMBING FIXTURE CHROME PLATED BRASS P-TRAP, NIPPLES WITH ESCUTCHEON, CHROME PLATED BRASS ANGLE SUPPLIES WITH ALL METAL CONSTRUCTION CHROME PLATED CHROME PLATED FLEXIBLE BRASS RISERS WITH NIPPLES AND CHROME PLATED BRASS ESCUTCHEONS WITH CAST SET SCREW.
7. CONTRACTOR SHALL PROVIDE ALL NECESSARY FITTINGS, PIPING, SUPPORTS, ETC. TO INSTALL EACH PLUMBING FIXTURE PER MANUFACTURER'S INSTALLATION INSTRUCTIONS AND TO COMPLY WITH CITY, STATE, ADA AND TAS CODES AND STANDARDS.
8. CONTRACTOR SHALL VERIFY THAT TRAP GUARDS ARE AN ACCEPTABLE ALTERNATE TO PLUMBED TRAP PRIMERS WITH AUTHORITIES HAVING JURISDICTION, PRIOR TO CONSTRUCTION. CONTRACTOR SHALL PROVIDE PLUMBED TRAP PRIMERS WHERE SCHEDULED TRAP GUARDS ARE NOT ALLOWED.

FIRE PROTECTION (ENTIRE BUILDING)

CONTRACTOR SHALL PROVIDE A COMPLETE WET TYPE FIRE PROTECTION SYSTEM FOR THE ENTIRE BUILDING

CONTRACTOR SHALL SUBMIT FIRE SPRINKLER DRAWINGS AND INFORMATION TO STATE AND LOCAL AUTHORITIES AND RECEIVE APPROVAL PRIOR TO SUBMITTING TO ARCHITECT/ ENGINEER AND SYSTEM INSTALLATION

FIRE SPRINKLER SYSTEM SHALL COMPLY WITH STATE BOARD OF INSURANCE, NFPA STANDARDS AND LOCAL FIRE CHIEF OR FIRE MARSHAL REGARDING DESIGN, MATERIALS AND INSTALLATION. REFER TO MECHANICAL SPECIFICATIONS FOR ADDITIONAL REQUIREMENTS

CONTRACTOR SHALL CONTACT OWNER'S REPRESENTATIVE FOR ADDITIONAL REQUIREMENTS REQUIRED BY OWNER'S INSURANCE CARRIER AND INFORMATION REGARDING REQUIREMENTS. CONTRACTOR SHALL CONTACT ARCHITECT FOR INFORMATION REGARDING OWNER'S REPRESENTATIVE.

PIPING MATERIALS LEGEND

SEWER BELOW GRADE	SCHEDULE 40 PVC
VENT ABOVE GRADE	SCHEDULE 40 PVC
COLD & HOT WATER (ABOVE GROUND)	TYPE 'L' COPPER
STORM SEWER ABOVE GRADE	SCHEDULE 80 PVC
COLD WATER (BURIED)	TYPE 'K' COPPER
GAS (ON ROOF)	SCHEDULE 40 BLACK IRON
GAS (INSIDE BUILDING)	SCHEDULE 40 BLACK IRON
CONDENSATE DRAIN (ON ROOF)	DWV COPPER
INDIRECT DRAIN (INSIDE BUILDING)	DWV COPPER
NOTE: REFER TO PROJECT SPECIFICATION MANUAL.	

STATE OF TEXAS — Richard L. Norris — 100089 — REGISTERED — PROFESSIONAL ENGINEER

The seal on this document was authorized by Richard L. Norris, P.E. 100089 on the date shown below.

June 30, 2020
Project # 1798

R Squared Consulting Engineers, Inc.
Firm Registration: F-15033
Richard L. Norris
McKinney, Texas 75070
Cell: 972-814-5007, Office 214-548-5118
Rnorris@RSEngineers.com

© COPYRIGHT 2020

REVISIONS

SHELL ONLY

THE SHOPS AT LUCAS

LUCAS, TEXAS 75002

2650 WEST LUCAS ROAD

DONALD F. SOPRANZI AIA, LEED AP ARCHITECT
10300 N Central Expressway
Suite 450 Dallas, Texas 75231
Telephone: 817-903-6663
dons@dfsarchitect.com

Signature	6-30-20
Sealed	6-30-20
Date	June 30, 2020
Scale	AS NOTED
Drawn	RLN
Job	2020-006

P3.1

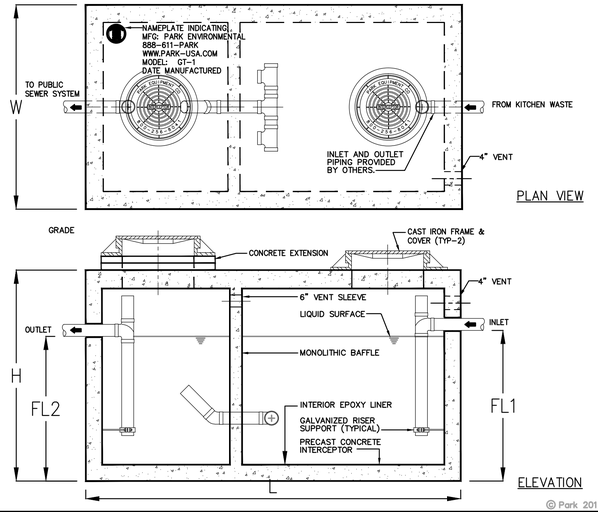

© Park 2010

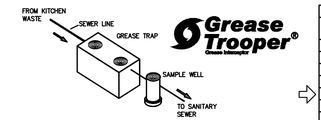

Typical applications include commercial and industrial food service kitchens where excessive grease may interfere with the proper drainage of the sewer system. The grease interceptor is generally buried below grade for gravity flow sewer systems. A sample well is utilized on the outlet side for sampling by the local water authority.

GREASE INTERCEPTOR SCHEDULE								
MODEL NO.	CAPACITY USGal	GREASE CAP. (LBS)	EMPTY WT (LBS)	LENGTH L	WIDTH W	HEIGHT H	INLET FL1	OUTLET FL2
GT-500	500	1,200	9,500	7'-10"	4'-4"	4'-6"	3'-3"	3'-0"
GT-750	750	1,700	9,900	7'-10"	4'-4"	6'-0"	4'-5"	4'-2"
GT-1000	1,000	2,300	13,350	8'-8"	5'-0"	6'-0"	4'-9"	4'-6"
GT-1250	1,250	2,900	14,650	9'-2"	5'-8"	6'-0"	4'-9"	4'-6"
GT-1500	**1,500**	**3,500**	**16,050**	**9'-2"**	**5'-8"**	**7'-0"**	**5'-9"**	**5'-6"**
GT-2000	2,000	4,600	21,250	9'-0"	6'-0"	8'-0"	6'-9"	6'-6"
GT-2500	2,500	5,700	27,050	13'-0"	7'-0"	7'-0"	5'-9"	5'-6"
GT-3000	3,000	6,900	33,150	13'-0"	7'-0"	8'-0"	6'-9"	6'-6"
GT-3500	3,500	8,000	38,550	13'-0"	7'-0"	8'-6"	7'-3"	7'-0"
GT-4000	4,000	9,300	38,100	16'-0"	8'-6"	7'-0"	5'-9"	5'-6"

OTHER SIZES ARE AVAILABLE. CONTACT US FOR MORE INFORMATION

Specifications

CONCRETE : Class II concrete with design strength of 4500 PSI at 28 days. Unit is of monolithic construction at floor, first stage of wall and baffle with sectional riser to required depth. (Monolithic baffle required, slide-in type is not acceptable)

REINFORCEMENT: Grade 60 reinforced with steel rebar conforming to ASTM A615 on required centers or equal.

C.I. CASTINGS: Manhole frames, covers or grates are manufactured of grey cast iron conforming to ASTM A48-76 Class 30. Manhole shall be nominal 24 inch diameter and be traffic duty.

Engineering Data

The grease interceptor is structurally & hydraulically engineered to conform to regional plumbing codes recommended in most cities. Consult with local authorities for specific application requirements.

Shop drawings shall include complete structural & bouyancy calculations certified by a licensed professional engineer.

Consult with Park Equipment Company for exact excavation dimensions & shipping information.

C-1613

PARK ENVIRONMENTAL EQUIPMENT **888-611-PARK** www.park-USA.com

"Expect the Best"

GREASE INTERCEPTOR
SERIES GT - 500 THRU 4000 GALLONS

SCALE	NONE	DWG. NO.	GT-1	REV.	A
DATE	2010				

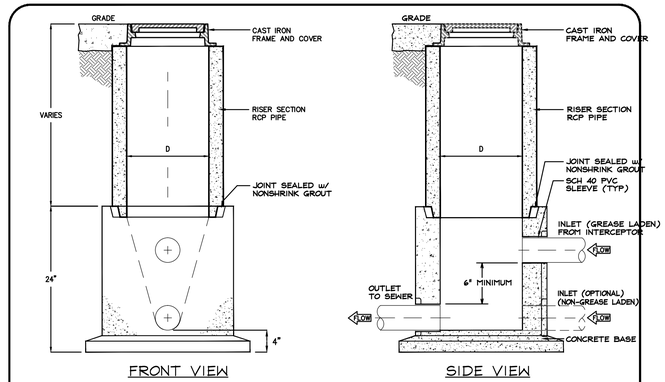

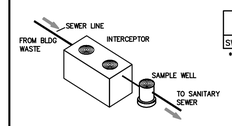

MODEL	DIAMETER "D"	IN & OUT PIPE SIZE	WIDTH "W"
SWB-154 *	15"	4"	24"

* – MODIFIED FOR CITY OF LUBBOCK IWMP STANDARDS

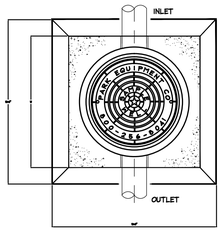

NOTES

1. SAMPLING WELL MUST BE INSTALLED UNDER A SEPARATE PLUMBING PERMIT.
2. USE 15" T&G R.C.P. FOR INSTALLATION FOR INSTALLATION 6'-0" DEEP AND LESS.
3. USE 24" T&G R.C.P. FOR INSTALLATION GREATER THAN 6'-0" DEEP. (STD RING AND M.H. COVER REQUIRED)
4. SAMPLING WELL MUST BE SET IN A CIRCULAR OR SQUARE CONCRETE PAD (1'-0" GREATER THAN OUTSIDE DIAMETER OF PIPE.)
5. INSIDE INSTALLATION NOT PERMITTED, WHERE OUTSIDE INSTALLATION IS POSSIBLE.
6. INSTALLATION INSIDE BLDG MUST BE POURED IN PLACE (15"MIN) NO CONCRETE PIPE IS PERMITTED, (AIR-TIGHT COVER REQUIRED.)
7. LAWN INSTALLATION MUST BE 4" ABOVE FINISHED GRADE.
8. DRIVE & SIDEWALK INSTALLATION MUST BE BROUGHT TO FINISHED GRADE
9. TO BE INSTALLED ON PRIVATE PROPERTY, IN AN ACCESSIBLE LOCATION TO CITY PERSONNEL.

© Park 2008

SPECIFICATIONS

CONCRETE : Class 1 concrete with of design strength of 4500 PSI at 28 days. Unit is of monolithic construction at floor and first stage of wall with sectional riser to required depth.

C.I. CASTINGS: Cast iron frames and grates are manufactured of grey cast iron conforming to ASTM A48-76 Class 30, Heavy-Duty AASHTO H-20

PARK ENVIRONMENTAL EQUIPMENT **888-611-PARK** www.park-USA.com

"Expect the Best"

SAMPLE WELL BASIN

SCALE	NONE	DWG. NO.	SWB-1	REV.	A
DATE	2010				

2

REVISIONS

2 TENANT REVISIONS

SHELL ONLY

THE SHOPS AT LUCAS

LUCAS, TEXAS 75002

2650 WEST LUCAS ROAD

DONALD F. SOPRANZI AIA, LEED AP ARCHITECT
10300 N Central Expressway
Suite 450 Dallas, Texas 75231
Telephone: 817-903-6663
dons@dfsarchitect.com

Signature 6-30-20

Sealed 6-30-20

Date June 30, 2020

Scale AS NOTED

Drawn RLN

Job 2020-006

P4.1 2

Seal: STATE OF TEXAS — Richard L. Norris — 100089 — Registered — PROFESSIONAL ENGINEER

The seal on this document was authorized by Richard L. Norris, P.E. 100089 on the date shown below.

Richard L. Norris

June 30, 2020
Project # 1798

R Squared Consulting Engineers, Inc.
Firm Registration: F-15033
4703 Rockcliff Lane
McKinney, Texas 75070
Cell: 972-814-5007, Office 214-548-5118
rnorris@R2engineers.com

©COPYRIGHT 2020

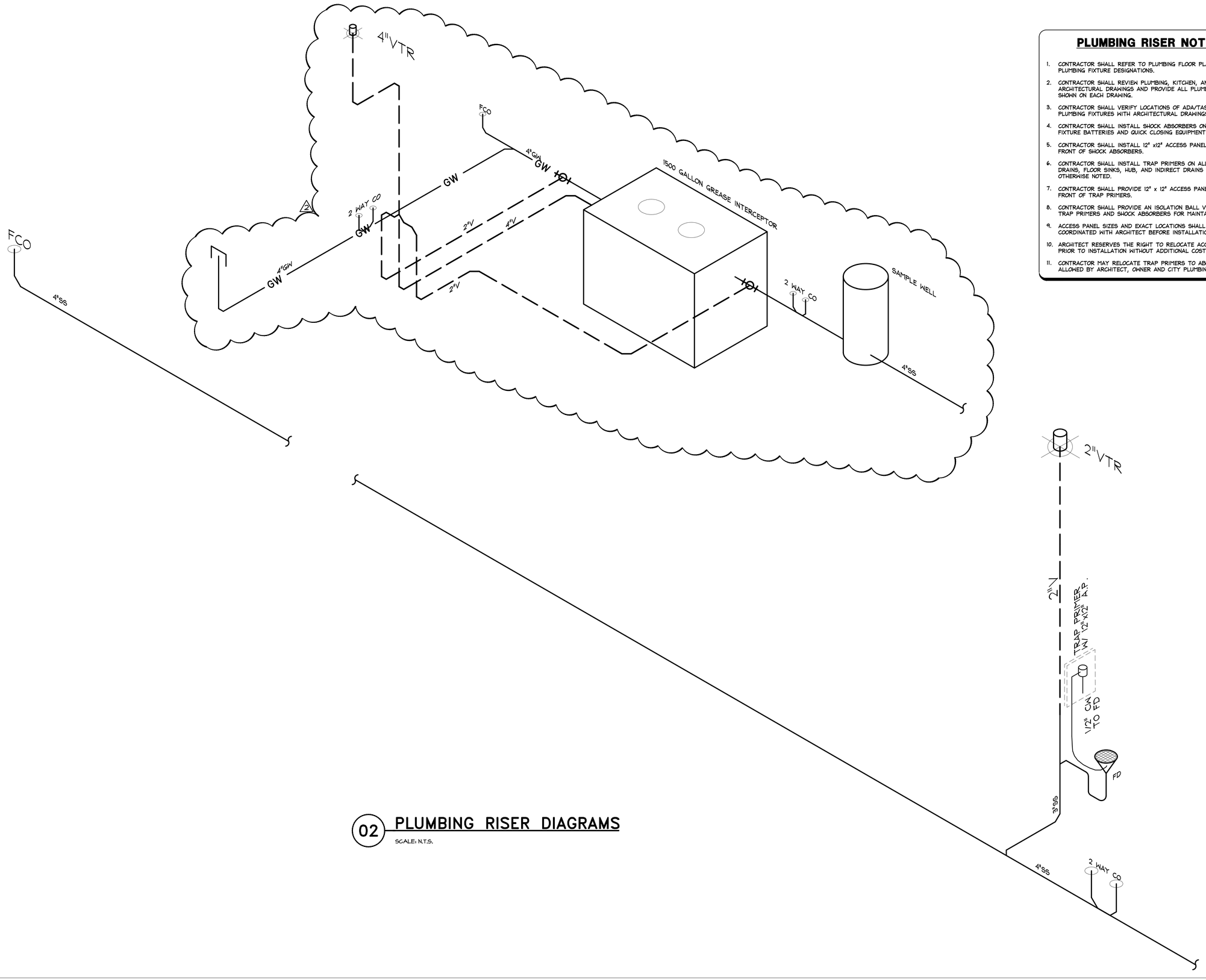

PLUMBING RISER NOTES:

1. CONTRACTOR SHALL REFER TO PLUMBING FLOOR PLANS FOR PLUMBING FIXTURE DESIGNATIONS.
2. CONTRACTOR SHALL REVIEW PLUMBING, KITCHEN, AND ARCHITECTURAL DRAWINGS AND PROVIDE ALL PLUMBING FIXTURES SHOWN ON EACH DRAWING.
3. CONTRACTOR SHALL VERIFY LOCATIONS OF ADA/TAS APPROVED PLUMBING FIXTURES WITH ARCHITECTURAL DRAWINGS.
4. CONTRACTOR SHALL INSTALL SHOCK ABSORBERS ON ALL PLUMBING FIXTURE BATTERIES AND QUICK CLOSING EQUIPMENT AND FIXTURES.
5. CONTRACTOR SHALL INSTALL 12" x12" ACCESS PANELS DIRECTLY IN FRONT OF SHOCK ABSORBERS.
6. CONTRACTOR SHALL INSTALL TRAP PRIMERS ON ALL FLOOR DRAINS, FLOOR SINKS, HUB, AND INDIRECT DRAINS UNLESS OTHERWISE NOTED.
7. CONTRACTOR SHALL PROVIDE 12" x 12" ACCESS PANELS DIRECTLY IN FRONT OF TRAP PRIMERS.
8. CONTRACTOR SHALL PROVIDE AN ISOLATION BALL VALVE ON ALL TRAP PRIMERS AND SHOCK ABSORBERS FOR MAINTAINANCE.
9. ACCESS PANEL SIZES AND EXACT LOCATIONS SHALL BE COORDINATED WITH ARCHITECT BEFORE INSTALLATION.
10. ARCHITECT RESERVES THE RIGHT TO RELOCATE ACCESS PANELS PRIOR TO INSTALLATION WITHOUT ADDITIONAL COST.
11. CONTRACTOR MAY RELOCATE TRAP PRIMERS TO ABOVE CEILING IF ALLOWED BY ARCHITECT, OWNER AND CITY PLUMBING INSPECTOR.

02 PLUMBING RISER DIAGRAMS

SCALE: N.T.S.

The seal on this document was authorized by Richard L. Norris, P.E. 100089 on the date shown below.

June 30, 2020
Project # 1798

R Squared Consulting Engineers, Inc.
Firm Registration: F-15033
4720 Worchester Lane
McKinney, Texas 75070
Cell: 972-814-5057, Office 214-548-5118
Rnorris@RSengineers.com
© COPYRIGHT 2020

REVISIONS

2 TENANT REVISIONS

SHELL ONLY

THE SHOPS AT LUCAS

2650 WEST LUCAS ROAD LUCAS, TEXAS 75002

DONALD F. SOPRANZI, AIA, LEED AP ARCHITECT
10300 N Central Expressway
Suite 450 Dallas, Texas 75231
Telephone: 817-903-6663
dons@dfsarchitect.com

Signature 6-30-20
Sealed 6-30-20
Date June 30, 2020
Scale AS NOTED
Drawn RLN
Job 2020-006

P5.1 2

GENERAL NOTES
GENERAL

1. THE STRUCTURAL DRAWINGS ARE NOT STAND ALONE DOCUMENTS AND ARE INTENDED TO BE USED IN COORDINATION WITH ALL THE CONTRACT DOCUMENTS FROM ALL DESIGN DISCIPLINES. THE CONTRACTOR SHALL COORDINATE ALL THE REQUIREMENTS OF THE CONTRACT DOCUMENTS, INCLUDING THE SPECIFICATIONS, FROM ALL THE DESIGN DISCIPLINES INTO THE SHOP DRAWING SUBMITTALS AND CONSTRUCTION.

2. COORDINATE DIMENSIONS FOR ALL OPENINGS, DEPRESSIONS, AND BLOCK OUTS WITH ALL THE CONTRACT DOCUMENTS FROM ALL DESIGN DISCIPLINES.

3. THE STRUCTURAL DRAWINGS SHALL NOT BE SCALED BY THE CONTRACTOR.

4. REFER TO THE ARCHITECTURAL DRAWINGS FOR INTERIOR NON-LOAD BEARING PARTITION WALLS. THESE NON-LOAD BEARING PARTITIONS SHALL BE CONNECTED TO THE PRIMARY BUILDING STRUCTURE TO ALLOW FOR VERTICAL LOAD DEFLECTIONS OF SPAN/240 FOR FLOOR AND ROOF FRAMING.

5. THE CONTRACTOR SHALL VERIFY ALL DIMENSIONS IN THE FIELD.

6. THE CONTRACTOR SHALL USE THE LATEST STRUCTURAL DRAWINGS TO PREPARE THE SHOP DRAWINGS FOR SUBMITTAL. IDENTIFY ON THE SUBMITTED SHOP DRAWINGS THE DATE OF THE STRUCTURAL DRAWINGS USED TO PREPARE THE SUBMITTAL.

7. A WAVIER OF LIABILITY PROVIDED BY THE ENGINEER OF RECORD SHALL BE SIGNED BY THE CONTRACTOR TO USE STRUCTURAL CAD DRAWING FILES FOR THE PREPARATION OF SHOP DRAWING SUBMITTALS. THE CONTRACTOR ASSUMES THE RESPONSIBILITY OF THE FILES AND ALL INFORMATION SHOWN ON THESE FILES. ALL ITEMS DEVIATING FROM THE STRUCTURAL DRAWINGS OR FROM PREVIOUSLY SUBMITTED SHOP DRAWINGS SHALL BE CLOUDED ON NEW SUBMITTALS.

8. THE CONTRACTOR SHALL REVIEW AND APPROVE ALL SHOP DRAWINGS PRIOR TO SUBMITTING FOR APPROVAL AND SHALL BE INDICATED BY CONTRACTORS SHOP DRAWING REVIEW STAMP. SHOP DRAWINGS WITHOUT CONTRACTOR'S REVIEW STAMP OR PREPARED FROM OUT DATED STRUCTURAL DRAWINGS WILL BE RETURNED WITHOUT REVIEW AND CONTACTOR WILL BE RESPONSIBLE FOR ANY RESULTING DELAYS. ALL SHOP DRAWINGS SHALL BE SUBMITTED TO THE ARCHITECT.

9. SHOP DRAWINGS SHALL BE FURNISHED AND REVIEWED BY A/E PRIOR TO ANY FABRICATION AND CONSTRUCTION.

10. SITE OR BUILDING SURVEY DRAWINGS SHALL NOT BE PREPARED FROM THE STRUCTURAL CAD FILES OR THE STRUCTURAL DRAWINGS.

11. THE CONFIGURATION OF THE STRUCTURE AND THE FRAMING ON THE DRAWINGS HAS BEEN DESIGNED FOR THE STABILITY UNDER THE FINAL CONFIGURATION. THE CONTRACTOR SHALL PROVIDE PROVISIONS TO STABILIZE THE STRUCTURE DURING CONSTRUCTION. THE CONTRACTOR SHALL PROVIDE ALL REQUIRED BRACING DURING CONSTRUCTION TO MAINTAIN THE STABILITY AND SAFETY OF ALL STRUCTURAL ELEMENTS DURING THE CONSTRUCTION PROCESS UNTIL THE LATERAL-LOAD RESISTING OR STABILITY-PROVIDING SYSTEM IS COMPLETELY INSTALLED AND THE STRUCTURE IS COMPLETELY TIED TOGETHER. TEMPORARY SUPPORTS SHALL NOT RESULT IN THE OVERSTRESS OR DAMAGE OF THE STRUCTURE.

12. THE CONTRACTOR SHALL CONSIDER THERMAL MOVEMENT EFFECTS ON THE STRUCTURE DURING CONSTRUCTION AND THE ERECTION SEQUENCE.

13. NOTCHING OR CUTTING ANY STRUCTURAL MEMBER IN THE FIELD IS STRICTLY PROHIBITED.

14. REFER TO THE SPECIFICATIONS FOR ALL TESTING REQUIREMENTS. A QUALIFIED TESTING LAB IS REQUIRED FOR PROVIDING CONCRETE TEST REPORTS AND FOR ALL WELDING INSPECTIONS.

15. STRUCTURAL DRAWINGS NOTED AS "NOT FOR CONSTRUCTION"ARE PRELIMINARY DRAWINGS AND ARE NOT COMPLETE AND SUBJECT TO CHANGE. SHOP DRAWINGS SHALL NOT BE PRODUCED FROM PRELIMINARY DRAWINGS.

16. MECHANICAL UNITS AND SUPPORT PADS SHALL NOT BE LOCATED ON THE ROOF UNLESS SHOWN ON THE STRUCTURAL DRAWINGS.

17. LARGER SLEEVE OPENINGS AND FRAMED OPENINGS ARE INDICATED ON THE STRUCTURAL DRAWINGS. ALL SLEEVES, INSERTS AND OPENINGS, INCLUDING FRAMES AND/OR SLEEVES NOT SHOWN ON THE STRUCTURAL DRAWINGS INCLUDING BUT NOT LIMITED TO MECHANICAL, ELECTRICAL AND PLUMBING WORK, BUT REQUIRED AS NOTED ABOVE, SHALL BE SUBMITTED TO THE ENGINEER FOR REVIEW.

18. ANCHOR BOLTS SHALL NOT BE REPLACED, REPAIRED OR MODIFIED WITHOUT THE APPROVAL OF THE STRUCTURAL ENGINEER OF RECORD.

19. THE DETAILS DESIGNATED AS "TYPICAL DETAILS" APPLY GENERALLY TO THE STRUCTURAL DRAWINGS IN ALL AREAS WHERE CONDITIONS ARE SIMILAR TO THOSE DESCRIBED IN THE DETAILS.

20. ALL DIMENSIONS AND CONDITIONS OF EXISTING CONSTRUCTION SHALL BE VERIFIED BY THE CONTRACTOR AT THE JOBSITE PRIOR TO THE PREPARATION OF SHOP DRAWINGS. DIFFERENCES BETWEEN EXISTING CONSTRUCTION AND THAT SHOWN ON THE STRUCTURAL DRAWINGS SHALL BE REFERRED TO THE ARCHITECT. DIFFERENCES SHALL ALSO BE CLOUDED ON THE SHOP DRAWINGS.

GENERAL (CONT'D.)

21. THE CONTRACT STRUCTURAL DRAWINGS AND SPECIFICATIONS REPRESENT THE FINISHED STRUCTURE, AND EXCEPT WHERE SPECIFICALLY SHOWN, DO NOT INDICATE THE MEANS OR METHODS OF CONSTRUCTION. THE ENGINEER SHALL NOT HAVE CONTROL OF, AND SHALL NOT BE RESPONSIBLE FOR, CONSTRUCTION MEANS, METHODS, TECHNIQUES, SEQUENCES OR PROCEDURES, FOR SAFETY PRECAUTIONS AND PROGRAMS IN CONNECTION WITH THE WORK, FOR THE ACTS OR OMISSIONS OF THE CONTRACTOR, SUBCONTRACTORS, OR ANY OTHER PERSON PERFORMING ANY OF THE WORK, OR FOR THE FAILURE OF ANY OF THESE PERSONS TO CARRY OUT THE WORK IN ACCORDANCE WITH THE STRUCTURAL CONTRACT DOCUMENTS.

22. IF CONFLICT EXISTS AMONG THE VARIOUS PARTS OF THE STRUCTURAL CONTRACT DOCUMENTS, STRUCTURAL DRAWINGS, GENERAL NOTES, AND SPECIFICATIONS, THE STRICTEST REQUIREMENTS, AS INDICATED BY THE ENGINEER, SHALL GOVERN.

23. PERIODIC SITE OBSERVATION BY FIELD REPRESENTATIVES OF GSEI IS SOLELY FOR THE PURPOSE OF DETERMINING IF THE WORK IS PROCEEDING IN GENERAL ACCORDANCE WITH THE STRUCTURAL CONTRACT DOCUMENTS. THIS LIMITED SITE OBSERVATION IS NOT INTENDED TO BE A CHECK OF THE QUALITY OR QUANTITY OF THE WORK, BUT RATHER A PERIODIC CHECK IN AN EFFORT TO INFORM THE OWNER AGAINST ANY OBSERVED DEFECTS AND DEFICIENCIES IN THE WORK OF THE CONTRACTOR.

SUBSTITUTIONS

1. ALL REQUESTS FOR SUBSTITUTIONS OF MATERIALS OR DETAILS SHOWN IN THE STRUCTURAL CONTRACT DOCUMENTS SHALL BE SUBMITTED FOR APPROVAL DURING THE BIDDING PERIOD. ONCE BIDS ARE ACCEPTED, PROPOSED SUBSTITUTIONS WILL BE CONSIDERED ONLY WHEN THEY ARE OFFICIALLY SUBMITTED WITH AN IDENTIFIED SAVINGS OR DURATION TO BE DEDUCTED FROM THE CONTRACT AND/OR SCHEDULE IMPACT. SUBMITTALS NOT SATISFYING THE ABOVE CRITERIA WILL NOT BE CONSIDERED.

MAINTENANCE STATEMENT

1. BUILDING STRUCTURES REQUIRE PERIODIC MAINTENANCE TO EXTEND LIFESPAN AND TO INSURE STRUCTURAL INTEGRITY FROM EXPOSURE TO THE ENVIRONMENT. A PLANNED PROGRAM OF MAINTENANCE SHALL BE ESTABLISHED BY THE BUILDING OWNER. THIS PROGRAM SHALL INCLUDE PROTECTIVE COATING FOR CONCRETE, SEALANTS, CAULKED JOINTS, EXPANSION JOINTS, CONTROL JOINTS, SPALLS AND CRACKS IN CONCRETE, AND PRESSURE WASHING OF EXPOSED STRUCTURAL MEMBERS.

CODES AND DESIGN SPECIFICATIONS

1. BUILDING CODE: IBC 2015.
2. STRUCTURAL STEEL: THE AMERICAN INSTITUTE OF STEEL CONSTRUCTION, "SPECIFICATION FOR STRUCTURAL STEEL BUILDINGS," LATEST EDITION.
3. STRUCTURAL CONCRETE: THE AMERICAN CONCRETE INSTITUTE, "BUILDING CODE REQUIREMENTS FOR REINFORCED CONCRETE (ACI 318-)," LATEST EDITION.

DESIGN LOADS

1. DEAD LOADS INCLUDED IN THE DESIGN CONSIST OF THE WEIGHT OF THE STRUCTURAL MEMBERS, PLUS THE FOLLOWING:

   CEILING AND MECHANICAL..... 10 PSF
   ROOFING AND RIGID INSULATION.....14 PSF

2. DESIGN LIVE LOADS:

   ROOF ..... 20 PSF
   FIRST FLOOR ..... 100 PSF

3. LIVE LOAD REDUCTIONS ARE IN ACCORDANCE WITH THE BUILDING CODE REQUIREMENTS.

4. SNOW LOADS:

   GROUND SNOW LOAD, Pg.....5 PSF

5. DESIGN WIND LOADING (ASCE 7-10):

   3 SECOND GUST WIND SPEED ..... 115 MPH
   EXPOSURE FACTOR C
   IMPORTANCE FACTOR 1
   INTERNAL PRESSURE COEFFECIENT, GCPi.....+/-0.18
   OCCUPANCY CATEGORY.....II

6. SEISMIC DESIGN CRITERIA: S_S = 0.109 S_1 = 0.055g
   SITE CLASS.....C
   IMPORTANCE FACTOR.....1
   OCCUPANCY CATEGORY.....II
   SEISMIC FORCE RESISTING SYSTEM.....ORDINARY STEEL BRACED FRAME

BUILDING MOVEMENTS

1. THE BUILDING MOVEMENTS SPECIFIED HEREIN ARE ANTICIPATED TO OCCUR AND SHALL BE TAKEN INTO ACCOUNT BY THE CONTRACTOR IN THE DESIGN, DETAILING, AND INSTALLATION OF THE BUILDING ELEMENTS.
2. SLAB-ON-GRADE OVER PREPARED SLABGRADE IS ESTIMATED TO HAVE +/- 1 INCHES MOVEMENT AS INDICATED IN THE GEOTECHNICAL REPORT FOR THIS SITE.
4. INTERIOR/ROOF DEFLECTIONS: PROVISIONS SHALL BE MADE IN INTERIOR PARTITIONS AND OTHER ELEMENTS SUPPORTED BY OR ATTACHED TO THE ROOFS FOR ROOF VERTICAL DEFLECTIONS OF L/240.
4. LATERAL BUILDING DRIFT: PROVISIONS SHALL BE MADE IN BUILDING CLADDING AND OTHER ARCHITECTURAL FINISHES FOR RELATIVE FLOOR TO ROOF LATERAL DEFLECTIONS OF STORY HEIGHT/400.

BUILDING PAD PREPARATION

BUILDING PAD PREPARATION IS BASED ON SOIL REPORTS AND RECOMMENDATIONS PREPARED BY ALPHA TESTING, INC. DATED JUNE 4, 2020 REPORT NO. G201275 REFER TO SOIL REPORTS FOR MORE DETAIL REQUIREMENTS. 2

1. AREAS DESIGNATED FOR NEW CONSTRUCTION SHOULD BE STRIPPED OF ALL SURFACE VEGETATION, LOOSE TOPSOIL, DEBRIS, FILL MATERIAL AND OTHER DELETERIOUS MATERIAL.
2. THE MOISTURE-CONDITIONED CLAYS SHOULD EXTEND TO THE TOP OF THE COMPETENT SHALY LIMESTONE OR TO A MAXIMUM DEPTH OF 12 FT. BELOW FINAL BUILDING PAD GRADE. 2
3. A MINIMUM OF 2 FT. OF SELECT, NON EXPANSIVE MATERIAL SHOULD BE INSTALLED BETWEEN THE BOTTOM OF THE FLOOR SLAB AND THE TOP SURFACE OF THE MOISTURE-CONDITIONED SOIL.
4. MOISTURE CONDITIONING SHOULD BE PERFORMED AS DISCUSSED IN THE SOIL REPORT.
5. CRUSHED STONE FLEXIBLE BASE MATERIAL MEETING TxDOT STANDARD SPECIFICATIONS ITEM 247, GRADE 1 OR 2 IS ALSO ACCEPTABLE FOR USE AS SELECT FILL WITHIN THE BUILDING AREAS. SELECT FILL AND FLEXIBLE BASE MATERIAL ARE DESCRIBED IN SOIL REPORT SECTION 7.3.
6. MOISTURE CONDITIONING OF THE ON-SITE SOIL SHOULD EXTEND THROUGHOUT THE ENTIRE BUILDING PAD AREA AND AT LEAST 5 FT BEYOND THE PERIMETER OF THE BUILDING AND APPURTENANCES.
7. MOISTURE-CONDITIONED SOILS SHOULD BE MAINTAINED IN A MOIST CONDITION PRIOR TO PLACEMENT OF THE REQUIRED THICKNESS OF SELECT, NON-EXPANSIVE MATERIAL IN THE SOIL REPORT. SELECT FILL MATERIAL SHOULD NOT EXTEND GREATER THAN 5 FT BEYOND THE BUILDING PERIMETER AND APPURTENANCES.

THE GEOTECHNICAL ENGINEER OF RECORD IS SOLELY RESPONSIBLE FOR ESTABLISHING FOUNDATION AND SLAB-ON-GRADE DESIGN CRITERIA, AND FOR THE CONSTRUCTION RECOMMEDATIONS FOR EXCAVATION, SUBGRADE PREPARATION, BACKFILLING AND COMPACTION. GEOTECHNICAL INFORMATION INDICATED IN THE STRUCTURAL CONSTRUCTION DOCUMENTS IS INTENDED TO REPLICATE THE RECOMMENDATIONS STATED IN THE GEOTECHNICAL ENGINEERING REPORT. THIS INFORMATION DOES NOT STATE OR IMPLY GEOTECHNICAL EXPERTISE ON THE PART OF GROUPSTRUCTURAL ENGINEERS INC. THE CONTRACTOR SHALL OBTAIN A COPY OF THE REPORT AND CONSTRUCTION DOCUMENTS ARE DISCOVERED, THE SOIL REPORT SHALL GOVERN.

SLAB-ON-GRADE

1. FLOOR SLAB SHALL BE 5 INCH THICK CONCRETE SLAB-ON-GRADE, U.N.O.
2. REINFORCE SLAB WITH #4 @ 16" EACH WAY (U.N.O.) , PLACED 1 1/2" FROM TOP OF SLAB. SUFFICIENT REBAR CHAIRS SHALL BE PLACED BELOW REBAR.
3. PLACE 10 MIL NATURAL VAPOR RETARDER OVER PREPARED FILL DIRECTLY BENEATH THE SLAB.
4. PROVIDE SAW CUT CONTROL JOINTS WHERE SHOWN ON PLAN. DEPTH SHALL BE A MINIMUM OF 1/4 OF THE SLAB THICKNESS AND AT A MAXIMUM SPACING OF 20'-0" O.C., E.W.. (03/S-3.1) AND PLAN.
5. A METAL CONSTRUCTION JOINT FORM MAY BE USED. REMOVE METAL FORMS BEFORE PLACING SECOND POUR.

DRILLED PIERS

1. REFER TO DRILLED PIER NOTES ON SHEET S3.01.

CONCRETE MIX

1. PROVIDE CONCRETE SCHEDULE:

CLASS	28-DAY STRENGTH (PSI)	MAX. SLUMP (IN.)	AGG. TYPE	SIZE (IN.)	USAGE
A	4000	6-8	HDRK	1 1/2	DRILLED PIERS
B	4000	3-5	HDRK	1	GRADE BEAMS, SLAB-ON-GRADE

SUBMIT CONCRETE MIX DESIGN FOR ARCHITECT & ENGINEER REVIEW.

2. PROVIDE FIVE PERCENT (PLUS OR MINUS 1 1/2 PERCENT) AIR ENTRAINMENT IN CONCRETE PERMANENTLY EXPOSED TO THE WEATHER (AND ELSEWHERE AT THE CONTRACTOR'S OPTION). USE OF AIR ENTRAINMENT MUST BE NOTED ON THE MIX DESIGNS.
3. ADMIXTURES MAY BE USED TO CONTROL THE WORKABILITY OF THE CONCRETE MIX. THEY SHALL BE USED IN ACCORDANCE WITH THE MANUFACTURER'S RECOMMENDATIONS AND INCLUDED IN THE SUBMITTED CONCRETE MIX DESIGN FOR APPROVAL. IN GENERAL, USE OF CALCIUM CHLORIDE WILL NOT BE PERMITTED.
4. CEMENT SHALL BE TYPE I OR TYPE II (ASTM C 150).
5. DO NOT PLACE CONCRETE WITH SLUMP AND TEMPERATURE OUTSIDE THE LIMITS PROVIDED ON THE APPROVED MIX DESIGNS.
6. CHANGING MATERIAL, PROPORTIONS, PROPERTIES, SOURCES OR ANYTHING WHICH IS A CHANGE IN THE APPROVED MIX DESIGN REQUIRES A NEW MIX DESIGN SUBMITTAL.

CONCRETE REINFORCEMENT

1. REINFORCING STEEL SHALL BE NEW DOMESTIC DEFORMED BILLET STEEL, CONFORMING TO ASTM A 615, GRADE 60. SUBMIT CONCRETE REINFORCEMENT SHOP DRAWING FOR ARCHITECT & ENGINEER REVIEW.
2. REINFORCING STEEL SHOWN IN SECTIONS IS SCHEMATIC INDICATION THAT REINFORCING EXISTS. REFER TO SCHEDULES, SECTION NOTES, AND GENERAL NOTES FOR ACTUAL REINFORCING REQUIRED.
3. DETAIL REINFORCING BARS AND PROVIDE ADEQUATE NUMBERS OF BAR SUPPORTS AND SPACERS IN ACCORDANCE TO THE ACI DETAILING MANUAL.
4. WHERE BAR TYPES ARE NOT SPECIFIED ON THE BAR BENDING DIAGRAM, DETAIL BARS ACCORDING TO THE FOLLOWING CRITERIA (UNLESS NOTED OTHERWISE):
   a. RUN TOP AND BOTTOM BARS CONTINUOUS, WITH SPLICES AND HOOKS AS DESCRIBED BELOW.
   b. PROVIDE STANDARD 90 DEGREE HOOK ON TOP BARS AT CANTILEVER ENDS.
   c. SPLICE TOP AND INTERMEDIATE BARS AT THE CENTER LINE BETWEEN MEMBER SUPPORTS.
   d. SPLICE BOTTOM BARS DIRECTLY OVER MEMBER SUPPORTS.
   e. MINIMUM LAP SPLICE LENGTH IN BEAMS, SLABS, AND WALLS IS 30 BAR DIAMETERS, EXCEPT THAT SPLICES IN HORIZONTAL WALL BARS AND INTERMEDIATE BEAM BARS SHALL BE 60 BAR DIAMETERS.
   f. PROVIDE CORNER BARS PER TYPICAL CORNER BAR DETAIL AT THE INSIDE AND OUTSIDE FACES OF INTERSECTING BEAMS OR WALLS.
5. BARS SHOWN IN THE SCHEDULE TO HOOK AT DISCONTINUOUS ENDS SHALL HAVE THE HOOK PLACED HORIZONTALLY AT EXTERIOR CORNERS.

GSEI
GroupStructural Engineers Inc.
3626 N. Hall St., Suite 620
Dallas, Texas 75219
Phone: 214-397-0455
TX LICENSE # F-6452
GSEI JOB NO.: 20011

REVISIONS
2 6/26/20 RTU AND SLAB LEAVE OUT REVISION

SHELL ONLY
THE SHOPS AT LUCAS
LUCAS, TEXAS 75002
2650 WEST LUCAS ROAD

DONALD F. SOPRANZI AIA, LEED AP ARCHITECT
10300 N Central Expressway
Suite 450 Dallas, Texas 75231
Telephone: 817-903-6663
dons@dfsarchitect.com

STATE OF TEXAS
HERMAN GUNAWAN
78866
LICENSED
PROFESSIONAL ENGINEER
6/1/2020

Signature
Sealed
Date 06/01/20
Scale AS SHOWN
Drawn MO, TO
Job 2020-006

S - 1.1

CONCRETE REINFORCEMENT (CONT'D.)

6. CONCRETE PROTECTION FOR REINFORCING STEEL MEASURED TO NEAREST BAR, STIRRUP OR TIE SHALL BE AS FOLLOWED:

   a. CONCRETE DEPOSITED AGAINST THE GROUND (WITH OR WITHOUT VAPOR BARRIER): 3".

   b. FORMED FACES OF BEAMS, COLUMNS AND WALLS EXPOSED TO RAIN OR IN CONTACT WITH THE GROUND: 2".

   c. FORMED FACES OF BEAMS AND COLUMNS NOT EXPOSED TO RAIN OR SOIL: 1 1/2".

   d. INTERIOR AND PROTECTED EXTERIOR FACES OF WALLS: 1".

   e. BEAM BOTTOMS FORMED WITH VOID BOXES: 3".

CAST -IN-PLACE CONCRETE

1. CONCRETE WORK SHALL BE IN COMPLIANCE WITH THE PROVISION OF "BUILDING CODE REQUIREMENTS FOR REINFORCED CONCRETE" (ACI 318-LATEST EDITION).

2. CONSTRUCTION JOINTS IN BEAMS, SLABS AND WALLS SHALL ONLY OCCUR WITHIN 1'-6" OF MIDSPAN BETWEEN SUPPORTS. CONSTRUCTION JOINTS IN SOIL SUPPORTED SLABS-ON-GRADE SHALL BE WHERE SHOWN. SUBMIT A DIAGRAM OF ALL PROPOSED CONSTRUCTION JOINTS WHICH ARE NOT SPECIFICALLY SHOWN ON THESE DRAWINGS

3. COLUMN PILASTERS ON THE SIDES OF GRADE BEAMS AND WALLS SHALL BE CAST MONOLITHICALLY WITH THE GRADE BEAM OR WALL UNLESS SHOWN OTHERWISE.

4. ALL SLEEVES, MECHANICAL OPENINGS, CONDUITS, PIPES, RECESSES, DEPRESSIONS, CURBS AND EMBEDDED ITEMS SHALL BE PROVIDED FOR AS SHOWN ON THE ARCHITECTURAL AND MECHANICAL DRAWINGS AND AS REQUIRED BY EQUIPMENT MANUFACTURERS. MINIMUM CONCRETE BETWEEN SLEEVES SHALL BE 6". INSTALLATION OF THESE ITEMS SHALL BE COORDINATED WITH SHOP DRAWINGS OF TRADES REQUIRING THESE ITEMS AND SUBMITTED TO THE ARCHITECT FOR APPROVAL.

5. PROVIDE SHEAR KEYS IN ALL CONSTRUCTION JOINTS IN BEAMS, IN ACCORDANCE WITH THE TYPICAL CONCRETE DETAILS.

6. PLACE WATERSTOPS IN ALL EXTERIOR CONSTRUCTION JOINTS BELOW GRADE AND ELSEWHERE AS CALLED FOR.

STRUCTURAL STEEL

1. STRUCTURAL STEEL SHALL CONFORM "SPECIFICATION FOR STRUCTURAL STEEL BUILDINGS," OF THE AMERICAN INSTITUTE OF STEEL CONSTRUCTION, LATEST EDITION, EXCEPT WHERE INDICATED OTHERWISE IN THE DRAWINGS AND SPECIFICATIONS.

2. STRUCTURAL STEEL MATERIAL SHALL CONFORM TO THE FOLLOWING DESIGNATIONS:

WIDE FLANGE (W) SHAPES AND TEES	A 992-50 (50 KSI YIELD)
OTHER ROLLED SHAPES, PLATES AND RODS	A 36 (36 KSI YIELD)
STRUCTURAL TUBES	A 500 (46 KSI YIELD)
PIPES	A 53 (35 KSI YIELD)
BOLTS FOR CONNECTIONS	A 325N (U.N.O.)
ANCHOR BOLTS	ASTM F1554, GR.36 (WELDABLE)

3. ALL STEEL BEAM CONNECTIONS NOT DETAILED ON THE DRAWINGS SHALL BE DESIGNED BY THE STRUCTURAL STEEL FABRICATORS USING LOAD REACTIONS GIVEN ON THE PLAN. WHERE REACTIONS ARE NOT GIVEN, BEAM REACTIONS AT EACH END MAY BE OBTAINED TO BE 50 PERCENT OF THE ALLOWABLE UNIFORM LOAD FOR BEAM SIZE AND SPAN GIVEN IN THE 50 KSI TABLES IN PART 3 OF THE AISC MANUAL, THIRTEENTH EDITION. A MINIMUM SHEAR CAPACITY OF 10 KIPS SHALL BE PROVIDED TO ALL THE BEAMS. CONNECTION DESIGN AND DETAILS SHALL BE SUBMITTED ON SHOP DRAWINGS ACCOMPANIED BY COMPLETE CALCULATIONS BEARING THE SEAL OF A LICENSED ENGINEER STATE OF TEXAS. DESIGNED OVERSTRESSES ARE NOT PERMISSIBLE.

4. ALL BEAM REACTIONS ARE IN KIPS AND AT SERVICE LOADS (UNFACTORED).

5. HORIZONTAL FORCES ARE INDICATED AS H=__K ON THE PLAN. THE FABRICATOR SHALL DESIGN THE BEAM CONNECTION USING HORIZONTAL FORCES AS AN ADDITIONAL TO THE VERTICAL REACTION.

6. ALL MOMENT CONNECTIONS SHALL BE FULL WELDED CONNECTIONS DESIGNED TO DEVELOP THE FULL CROSS-SECTION OF THE MEMBER.

7. ALL BOLTS SHALL BE TIGHTENED TO A "SNUG TIGHT" CONDITION.

8. BACK TO BACK CHANNELS OR DOUBLE ANGLES ACTING AS COMPRESSION MEMBERS SHALL BE CONNECTED TO EACH OTHER AT THIRD POINTS ALONG THE LENGTH BY WELDING IN SPACER PLATES OF EQUAL THICKNESS TO THE GUSSET PLATES. UNEQUAL LEG ANGLES SHALL BE ORIENTED LONG LEG DOWN UNLESS NOTED OTHERWISE.

9. TEMPORARY SHORING OR BRACING DURING THE CONSTRUCTION PHASE BEFORE THE COMPLETION OF THE CONNECTIONS AND POURING OF FLOOR SLAB IS THE RESPONSIBILITY OF THE CONTRCTOR.

10. CONNECT MISCELLANEOUS STEEL MEMBERS USING FILET WELDS SUFFICIENT TO DEVELOP THE TENSILE STRENGTH OF THE SMALLER MEMBER AT THE JOINT UNLESS SHOWN OTHERWISE.

11. ALL STEEL SHALL BE FURNISHED WITH SHOP COAT OF RUST INHIBITIVE PRIMER.

12. ALL STEEL BEAMS SHALL BE ERECTED WITH NATURAL CAMBER UP.

OPEN WEB STEEL JOISTS

1. STEEL JOISTS SHALL CONFORM TO THE REQUIREMENTS OF THE LATEST EDITION OF THE STEEL JOIST INSTITUTE'S STANDARD SPECIFICATIONS AND LOAD TABLES. MATERIAL SHALL BE DOMESTIC STEEL. SUBMIT JOIST SHOP DRAWINGS AND CALCULATIONS WITH A SEAL BY LICENCED ENGINEER IN STATE OF TEXAS.

2. PROVIDE JOIST BRIDGING AND END ANCHORAGE AS REQUIRED IN ACCORDANCE WITH THE DESIGN AND SPACING REQUIREMENTS OF THE STEEL JOIST INSTITUTE'S STANDARD SPECIFICATIONS, UNLESS SHOWN OTHERWISE ON THE DRAWINGS. PROVIDE ADDITIONAL BRIDGING AS REQUIRED TO BRACE THE BOTTOM CHORD WHEREVER IDENTIFIED WIND UPLIFT EXCEEDS THE ROOF DEAD LOAD.

3. ALL HANGERS SUPPORTING MECHANICAL EQUIPMENT, SPRINKLER LINES, ETC., FROM THE CHORD OF STEEL JOISTS, SHALL BE LOCATED AT THE PANEL POINTS OF THE JOISTS; OTHERWISE THE JOIST CHORD SHALL BE REINFORCED TO SUPPORT THE ADDITIONAL LOAD.

4. EXTEND BOTTOM CHORDS OF ALL ROOF JOISTS CENTERED ON COLUMNS AND WELD THE BOTTOM CHORDS TO THE COLUMNS. DO NOT CONNECT BOTTOM CHORDS OF JOISTS TO COLUMNS UNTIL THE ROOF DEAD LOAD HAS BEEN APPLIED.

5. COORDINATE JOIST SEATS DEPTH WITH JOIST MANUFACTURER'S RECOMMENDATIONS. UNLESS SHOWN OTHERWISE ON THE DRAWINGS.

6. JOISTS SHALL HAVE POSITIVE CAMBER OF THE MAGNITUDE RECOMMENDED BY THE STEEL JOIST INSTITUTE FOR THE VARIOUS SPANS.

7. JOIST MANUFACTURER SHALL DESIGN CHORDS OF JOISTS TO SUPPORT A NOMINAL CONCENTRICALLY-APPLIED LOAD OF 100 POUNDS BETWEEN ALL PANEL POINTS WITHOUT REQUIRING ADDITIONAL REINFORCING. THIS ADDITIONAL LOAD HAS BEEN ACCOUNTED FOR IN OVERALL DESIGN LOADS AND IS NOT ADDITIVE TO THOSE SPECIFIED.

8. THE ROOF JOISTS IN THE AREAS OF 10'-0" ADJACENT TO EXTERIOR WALLS SHALL BE DESIGNED TO RESIST A NET UPLIFT OF 18 POUNDS PER SQUARE FOOT. THE REMAINING AREAS SHALL BE DESIGNED TO RESIST A NET UPLIFT OF 10 POUNDS PER SQUARE FOOT. PROVIDE EXTRA BRIDGING, WHERE REQUIRED, TO BRACE THE BOTTOM CHORD IN COMPRESSION.

9. WHERE HORIZONTAL FORCES (H = ___KIPS) ARE INDICATED ON PLAN, THE JOIST TOP CHORDS SHALL BE DESIGNED FOR THE INDICATED HORIZONTAL FORCES IN COMBINATION WITH GRAVITY LOADS. THIS FORCE MAY BE EITHER COMPRESSION OR TENSION.

10. JOISTS MAY BE OFFSET AND SEATS OVERLAPPED IF BEAM FLANGES ARE NOT WIDE ENOUGH TO ACCOMMODATE BEARING SEATS FROM BOTH SIDES. CONTRACTOR TO COORDINATE DECK LAYOUT SO END LAPS OCCUR OVER OFFSET JOISTS. JOISTS ON COLUMN LINES MUST STILL BRACE COLUMNS WITH EXTENDED BOTTOM CHORDS.

11. JOISTS SHALL BE FURNISHED WITH SHOP COAT OF RUST-INHIBITIVE PRIMER PAINT.

METAL ROOF DECK

1. ROOF DECK SHALL BE 1 1/2" DEEP, 20 GAUGE, WIDE RIB, GALVANIZED METAL DECK, WITH 6" RIB SPACING, GALVANIZED MEETING THE REQUIREMENTS OF THE STEEL DECK INSTITUTE.

2. ROOF DECK SHALL BE PLACED WITH CONTINUOUS SPANS OF THREE OR MORE WHERE POSSIBLE AND LAPPED ONLY OVER SUPPORTS.

3. DECK CONNECTIONS SHALL BE AS FOLLOWS:

   AT EACH SUPPORT: PUDDLE WELDS AT EACH SIDE LAP AND AT INTERMEDIATE RIBS WITH 36/5 PATTERN. (TYPICAL U.N.O.)

   AT SIDE LAPS: SCREWS EQUALLY SPACED BETWEEN SUPPORTS, NOT TO EXCEED 10" ON CENTER TYPICAL. (U.N.O.)

4. SCREWS SHALL BE "TEKS" #10-14X3/4" HWH #2.

5. PUDDLE WELDS SHALL BE FULL-FUSION, 5/8" DIAMETER (MINIMUM) WELDS. ALL WELDS SHALL BE MADE WITH AWS E70 ELECTRODES. METAL AROUND WELDS SHALL BE COMPLETELY INTACT AFTER WELDING.

6. SUSPENDED CEILING, LIGHT FIXTURES, DUCTS OR OTHER UTILITIES SHALL NOT BE HUNG FROM STEEL DECK.

QUALITY CONTROL

1. A TESTING LAB IS REQUIRED FOR CONCRETE STRENGTH, CONCRETE REINFORCING, STRUCTURAL STEEL, AND WELDING INSPECTIONS. TEST REPORTS SHALL BE SUBMITTED TO THE ENGINEER. SHOP DRAWINGS ON ALL STRUCTURAL ELEMENTS SHALL BE SUBMITTED TO THE ENGINEER FOR APPROVAL. ALL STEEL HEADED STUDS WELDED TO STEEL PLATES SHALL BE FULL FUSION WELDS AND PROPERLY INSPECTED.

STRUCTURAL ABBREVIATIONS
(ABBREVIATIONS SHOWN ARE NOT NECESSARILY USED)

A

ABOVE FINISH FLOOR	A.F.F.
ADDITIONAL	ADDN'L.
ADJACENT	ADJ.
AGGREGATE	AGGR.
ALTERNATE	ALT.
ANCHOR BOLT	A.B.
AND	&
ANGLE	L
APPROVED	APPD.
APPROXIMATE	APPROX.
ARCHITECT	ARCH.
ARCHITECTURAL	ARCH'L.
ARCH'L FINISH SURFACE	A.F.S.
AT	@
AIR CONDITIONER	A.C.
AIR HANDLING UNIT	AHU

B

BACK FACE	B.F.
BASEMENT	BSMT.
BEAM	BM.
BEARING	BRG.
BELOW FINISH FLOOR	B.F.F.
BETWEEN	BTWN.
BEVEL	BEV.
BLOCK	BLK.
BLOCKING	BLK'G.
BLOCK-OUT	B.O.
BOTTOM	BOT.
BRACKET	BRKT.
BRICK LEDGE	BR. L.
BRIDGING	BRDG.
BUILDING	BLDG.
BUILDING LINE	B.L.

C

CANTILEVER	CANT.
CAST IRON	C.I.
CAST-IN-PLACE	C.I.P.
CEILING	CLG.
CENTER LINE	C.L.
CENTER OF GRAVITY	C.G.
CENTER TO CENTER	C. TO C.
CHANNEL	C
CLEAR OR CLEARANCE	CLR.
COLUMN	COL.
COMPRESSION	COMP.
CONCRETE	CONC.
CONCRETE MASONRY UNIT	CMU
CONNECTION(S)	CONN(S).
CONTINUOUS	CONT.
CONTRACTOR	CONTR.
CONTROL JOINT	C.J.
CONSTRUCTION	CONST.
COVER PLATE	COV. PL

D

DETAIL	DET.
DEAD LOAD	D.L.
DEFORMED BAR ANCHOR	D.B.A.
DIAGONAL	DIAG.
DIAMETER	DIA.
DIMENSION(S)	DIM(S).
DRAWING(S)	DWG(S).
DOUBLE	DBL.
DOWEL(S)	DWL(S).

E

EACH	EA.
EACH FACE	E.F.
EACH WAY	E.W.
ELECTRICAL	ELEC.
ELEVATION	EL.
ELEVATOR	ELEV.
EMBEDMENT	EMBED.
ENGINEER	ENGR.
ENTRANCE	ENT.
EQUAL	EQ.
EQUIPMENT	EQUIP.
EXPANSION	EXP.
EXPANSION JOINT	E.J.
EXISTING	EXIST.
EXTERIOR	EXT.

F

FACE TO FACE	F. TO F.
FABRICATOR	FABR.
FAR SIDE	F.S.
FIELD VERIFY	F.V.
FINISH(ED)	FIN.
FINISHED FLOOR	FIN. FL.
FIREPROOF(ING)	F.P.
FLOOR	FL.
FLOOR DRAIN	F.D.
FOUNDATION	FDN.

G

GAGE OR GAUGE	GA.
GALVANIZED	GALV.
GALVANIZED IRON	G.I.
GALVANIZED STEEL	G.S.
GENERAL CONTRACTOR	GEN. CONTR.
GOVERNMENT	GOVT.
GRADE	GR.
GRADE BEAM	GR. BM.

H

HEADED STUDS	H.S.
HEIGHT	HT.
HIGH POINT	H.P.
HORIZONTAL	HORIZ.
HOOK	HK.
HOT DIP GALVANIZED	H.D. GALV.

I

INFORMATION	INFO.
INSIDE DIAMETER	I.D.
INSIDE FACE	I.F.
INTERIOR	INT.
INTERMEDIATE	INTERM.

J

JOINT(S)	JT(S).
JOIST(S)	JST(S).

K

KIPS (1000 LBS)	K
KIP PER LINEAR FOOT	KLF
KIP PER SQUARE FOOT	KSF

L

LIGHTWEIGHT CONCRETE	LWT. CONC.
LIVE LOAD	LL
LONGITUDINAL	LONG.
LONG LEG HORIZONTAL	LLH
LONG LEG VERTICAL	LLV
LONG SIDE HORIZONTAL	LSH
LONG SIDE VERTICAL	LSV

M

MANUFACTURER	MFR.
MASONRY OPENING	M.O.
MATERIAL	MAT.
MAXIMUM	MAX.
MECHANICAL	MECH.
MEZZANINE	MEZZ.
MIDDLE	MID.
MINIMUM	MIN.
MISCELLANEOUS	MISC.
MOMENT	M
MOMENT CONNECTION	M.C.

N

NOMINAL	NOM.
NON-SHRINK	N.S.
NOT TO SCALE	N.T.S.
NUMBER	NO. OR #

O

ON CENTER	O.C.
OPENING(S)	OPNG(S).
OPPOSITE	OPP.
OPPOSITE HAND	O.H.
OUTSIDE FACE	O.F.
OUTSIDE DIAMETER	O.D.

P

PARALLEL	PAR.
PARTITION	PARTN.
PENETRATION	PEN.
PERPENDICULAR	PERP.
PIECE	PC.
PLATE	PL.
POINT	PT.
POUNDS PER SQUARE FOOT	P.S.F.
POUNDS PER SQUARE INCH	P.S.I.
PRECAST CONCRETE	P.C.
PREFABRICATED	PREFAB.
PRELIMINARY	PRELIM.
PROJECTION	PROJ.

R

RADIUS	R
REINFORCE(ING) (ED) (MENT)	REINF.
REMAINDER	REM.
RETENTION SYSTEM	RET. SYS.
REQUIRE	REQ.
REQUIRED	REQ'D.
ROOF	RF.
ROOF DRAIN	R.D.
ROOF OPENING	RF. OPNG.
ROOM	RM.
ROUND	RND.

S

SCHEDULE(D)	SCHED.
SECTION	SECT.
SHEAR	V
SHEET	SHT.
SIDEWALK	SW.
SIMILAR	SIM.
SPACE	SPA.
SPECIFICATION(S)	SPEC(S).
SPECIFIED	SPEC'D.
SQUARE FOOT (FEET)	S.F.
STANDARD	STD.
STEEL	STL.
STIFFENER	STIFF.
STRAIGHT	STR.
STIRRUPS	STIR.
STRUCTURE	STRUCT.
STRUCTURAL	STRUCT'L.
SYMMETRICAL	SYM.
SUBCONTRACTOR	SUBCONTR.
SUPPORT(S)	SUPT(S).

T

TEMPERATURE	TEMP.
TENSION	T
TERRAZZO	TERR.
THICK	THK.
TONGUE & GROOVE	T & G
TOP AND BOTTOM	T & B
TOP OF	T.O.
TOP OF BEAM	T.O.B.
TOP OF FOOTING	T.O.F.
TOP OF PIER	T.O.P.
TOP OF PIER CAP	T.O.P.C.
TOP OF RETAINING WALL	T.O.R.W.
TOP OF STEEL	T.O.S.
TOP OF STRUCTURAL CONCRETE	T.O.S.C.
TOP OF WALL	T.O.W.
TREAD	TR.
TUBE STEEL	TS OR HSS
TYPICAL	TYP.

U

UNLESS NOTED OTHERWISE	U.N.O.

V

VERTICAL	VERT.
VERTICAL BRACE	VB

W

WATERSTOP	WS.
WATERPROOFING	WPFG.
WELDED WIRE MESH	W.W.M.
WIND BRACE	WB
WIND LOAD	W.L.
WINDOW	WDW.
WITH	W/
WORK POINT	W.P.
WOOD	WD.
WROUGHT IRON	W.I.
WIDE FLANGE	W.F. OR W

GSEI
GroupStructural Engineers Inc.
3626 N. Hall St., Suite 620
Dallas, Texas 75219
Phone: 214-397-0455
TX LICENSE # F-6452
GSEI JOB NO.: 20011

REVISIONS

SHELL ONLY

THE SHOPS AT LUCAS

LUCAS, TEXAS 75002

2650 WEST LUCAS ROAD

DONALD F. SOPRANZI AIA, LEED AP ARCHITECT
10300 N Central Expressway
Suite 450 Dallas, Texas 75231
Telephone: 817-903-6663
dons@dfsarchitect.com

STATE OF TEXAS
HERMAN GUNAWAN
78866
LICENSED
PROFESSIONAL ENGINEER
6/1/2020

Signature

Sealed

Date 06/01/20

Scale AS SHOWN

Drawn MO, TO

Job 2020-006

S - 1.2

GSEI
GroupStructural Engineers Inc.
3626 N. Hall St., Suite 620
Dallas, Texas 75219
Phone: 214-397-0455
TX LICENSE # F-6452
GSEI JOB NO.: 20011

SCHEDULE OF STRUCTURAL SPECIAL INSPECTIONS

1. SPECIAL INSPECTIONS / TESTING –
   SHALL BE PREFORMED BY A REGISTERED PROFESSIONAL ENGINEER AND A QUALIFIED TESTING LAB DESINATED BY THE OWNER AND ARCHITECT.
   "SPECIAL STRUCTURAL INSPECTION" SHALL NOT RELIEVE THE OWNER OR THEIR AGENT FROM REQUESTING THE JURISDICTION BUILDING DEPARTMENT INSPECTIONS REQUIRED BY SECTION 109 OF THE IBC.

2. REPORTING FOR SPECIAL INSPECTION –
   SPECIAL INSPECTION AND TESTING REPORTS SHALL BE SEALED BY A REGISTERED PROFESSIONAL ENGINEER AND COMPLETED AND DISTRIBUTED AT THE COMPLETION OF EACH TASK. IF A TASK IS TO TAKE LONGER THAN (3) DAYS, PROVIDE REPORTS FOR EACH DAY. PROVIDE COPIES OF REPORTS TO: CONTRACTOR, OWNER, ARCHITECT AND STRUCTURAL ENGINEER OF RECORD. SPECIAL INSPECTOR TO KEEP A NON–COMPLIANCE LIST DOCUMENTING ITEMS INSPECTED NOT MEETING APPROVED CONSTRUCTION DOCUMENTS AND WHEN / HOW RESOLVED.

3. SEE ARCHITECTURAL, MECHANICAL, ELECTRICAL, AND PLUMBING CONSTRUCTION DOCUMENTS FOR ADDITIONAL NON–STRUCTURAL SPECIAL INSPECTION ITEMS.

IN ACCORDANCE WITH IBC CHAPTER 17, THE FOLLOWING TYPES OF WORK REQUIRE SPECIAL INSPECTIONS AND TESTING:

SPECIAL INSPECTION AND VERIFICATION OF CONCRETE CONSTRUCTION

SPECIAL INSPECTION REQUIRED Y/N	VERIFICATION AND INSPECTION	FREQUENCY OF INSPECTION		REFERENCE FOR CRITERIA	
		CONTINUOUS DURING TASK LISTED	PERIODICALLY DURING TASK LISTED	IBC SECTION	REFERENCED STANDARD
Y	1. INSPECTION OF REINFORCING STEEL, INCLUDING PRESTRESSING TENDONS AND PLACEMENT.	-----	X	1913.4	ACI 318: 3.5, 7.1-7.7
N	2. INSPECTION OF REINFORCING STEEL WELDING IN ACCORDANCE WITH TABLE 1704.3, ITEM 5b.	-----	-----	-----	AWS D1.4 ACI 318: 3.5.2
Y	3. INSPECT BOLTS AND ANCHOR PLATES WITH ATTACHED HEADED STUDS, OR REBAR TO BE INSTALLED IN CONCRETE PRIOR TO AND DURING PLACEMENT OF CONCRETE WHERE ALLOWABLE LOADS HAVE BEEN INCREASED.	X	-----	1911.5	-----
Y	4. VERIFYING USE OF REQUIRED DESIGN MIX.	-----	X	1904.2.2, 1913.2, 1913.3	ACI 318: CH. 4, 5.2-5.4
Y	5. AT THE TIME FRESH CONCRETE IS SAMPLED TO FABRICATE SPECIMENS FOR STRENGTH TESTS, PERFORM SLUMP AND AIR CONTENT TESTS AND DETERMINE THE TEMPERATURE OF THE CONCRETE.	X	-----	1913.10	ASTM C 172 ASTM C 31 ACI 318: 5.6, 5.8
Y	6. INSPECTION OF CONCRETE AND SHOTCRETE PLACEMENT FOR PROPER APPLICATION TECHNIQUES.	X	-----	1913.6, 1913.7, 1913.8	ACI 318: 5.9, 5.10
Y	7. INSPECTION FOR MAINTENANCE OF SPECIFIED CURING TEMPERATURE AND TECHNIQUES.	-----	X	1913.9	ACI 318: 5.11- 5.13
	8. INSPECTION OF PRESTRESSED CONCRETE:.				
N	a. APPLICATION OF PRESTRESSING FORCES.	-----	-----	-----	ACI 318: 18.20 ACI 318: 18.18.4
N	b. GROUTING OF BONDED PRESTRESSING TENDONS IN THE SEISMIC-FORCE-RESISTING-SYSTEM.	-----	-----	-----	
N	9. ERECTION OF PRECAST (TILT UP PANELS) CONCRETE MEMBERS.	-----	-----	-----	ACI 318: CH. 16
N	10. VERIFICATION OF IN-SITU CONCRETE STRENGTH, PRIOR TO STRESSING OF TENDONS IN POST-TENSIONED CONCRETE AND PRIOR TO REMOVAL OF SHORING AND FORMS FROM BEAMS AND STRUCTURAL SLABS.	-----	-----	-----	ACI 318: 6.2
Y	11. INSPECT FORMWORK FOR SHAPE, LOCATION AND DIMENSIONS OF THE CONCRETE MEMBER BEING FORMED.	-----	X	-----	ACI 318: 6.1.1

SPECIAL INSPECTION AND VERIFICATION OF STEEL CONSTRUCTION

SPECIAL INSPECTION REQUIRED Y/N	VERIFICATION AND INSPECTION	FREQUENCY OF INSPECTION		REFERENCE FOR CRITERIA	
		CONTINUOUS DURING TASK LISTED	PERIODICALLY DURING TASK LISTED	IBC SECTION	REFERENCED STANDARD
	1. MATERIAL VERIFICATION OF HIGH-STRENGTH BOLTS, NUTS AND WASHERS:				
Y	a. IDENTIFICATION MARKINGS TO CONFORM TO ASTM STANDARDS SPECIFIED IN THE APPROVED CONSTRUCTION DOCUMENTS.	-----	X	-----	APPLICABLE ASTM MATERIAL SPECIFICATIONS; AISC 360 SECTION A3.3
Y	b. MANUFACTURER'S CERTIFICATE OF COMPLIANCE REQUIRED.	-----	X	-----	-----
	2. INSPECTION OF HIGH-STRENGTH BOLTING:				
Y	a. BEARING TYPE CONNECTIONS.	-----	X	1704.3.3	AISC 360, SECTION M2.5
Y	b. SLIP-CRITICAL CONNECTIONS.	X	-----		
	3. MATERIAL VERIFICATION OF STRUCTURAL STEEL:				
N	a. IDENTIFICATION MARKINGS TO CONFORM TO ASTM STANDARDS SPECIFIED IN THE APPROVED CONSTRUCTION DOCUMENTS.	-----	-----	1708.4	ASTM A 6, OR ASTM A 568
N	b. MANUFACTURER'S CERTIFIED MILL TEST REPORTS.	-----	-----	1708.4	ASTM A 6, OR ASTM A 568
	4. MATERIAL VERIFICATION OF WELD FILLER MATERIALS:				
Y	a. IDENTIFICATION MARKINGS TO CONFORM TO AWS SPECIFICATION IN THE APPROVED CONSTRUCTION DOCUMENTS.	-----	-----	-----	AISC 360, SECTION A3.5
N	b. MANUFACTURER'S CERTIFICATE OF COMPLIANCE REQUIRED.	-----	-----	-----	-----
	5. INSPECTION OF WELDING: a. STRUCTURAL STEEL :				
Y	1) COMPLETE AND PARTIAL PENETRATION GROOVE WELDS.	X	-----	1704.3.1	AWS D1.1
Y	2) MULTIPASS FILLET WELDS.	X	-----		
Y	3) SINGLE-PASS FILLET WELDS > 5/16"	X	-----		
Y	4) SINGLE-PASS FILLET WELDS < 5/16"	_ -----	X		
Y	5) FLOOR AND ROOF DECK WELDS.	-----	X	-----	AWS D1.3
	b. REINFORCING STEEL:	-----	-----	-----	AWS D1.4 ACI 318 3.5.2
N	1) VERIFICATION OF WELDABILITY OF REINFORCING STEEL OTHER THAN ASTM A 706.	-----	X		
N	2) REINFORCING STEEL-RESISTING FLEXURAL AND AXIAL FORCES IN INTERMEDIATE AND SPECIAL MOMENT FRAMES, AND BOUNDARY ELEMENTS OF SPECIAL REINFORCED CONCRETE SHEAR WALLS AND SHEAR REINFORCEMENT.	X	-----		
Y	3) SHEAR REINFORCEMENT.	X	-----		
Y	4) OTHER REINFORCING STEEL.	-----	X		
	6. INSPECTION OF STEEL FRAME JOINT DETAIL FOR COMPLIANCE WITH APPROVED CONSTRUCTION DOCUMENTS:				
Y	a. DETAILS SUCH AS BRACING AND STIFFENING.	-----	X	1704.3.2	-----
Y	b. MEMBER LOCATIONS.	-----	X		
Y	c. APPLICATION OF JOINT DETAILS AT EACH CONNECTION.	-----	X		

REQUIRED VERIFICATION AND INSPECTION OF CAST-IN-PLACE PIER FOUNDATIONS

SPECIAL INSPECTION REQUIRED Y/N	VERIFICATION AND INSPECTION TASK	CONTINUOUS DURING TASK LISTED	PERIODICALLY DURING TASK LISTED
Y	1. OBSERVE DRILLING OPERATIONS AND MAINTAIN COMPLETE AND ACCURATE RECORDS FOR EACH PIER.	X	-----
Y	2. VERIFY PLACEMENT LOCATIONS AND PLUMBNESS, CONFIRM PIER DIAMETERS, BELL DIAMETERS (IF APPLICABLE), LENGTH, EMBEDMENT INTO BEDROCK (IF APPLICABLE) AND ADEQUATE END BEARING STRATA CAPACITY. RECORD CONCRETE OR GROUT VOLUMES.	X	-----
Y	3. FOR CONCRETE PIERS, PERFORM ADDITIONAL INSPECTIONS IN ACCORDANCE WITH SECTION 1705.3 AND THE CONCRETE SPECIAL INSPECTION TABLES.	-----	-----

REVISIONS

SHELL ONLY
THE SHOPS AT LUCAS
LUCAS, TEXAS 75002
2650 WEST LUCAS ROAD

DONALD F SOPRANZI AIA, LEED AP ARCHITECT
10300 N Central Expressway
Suite 450 Dallas, Texas 75231
Telephone: 817-903-6663
donsadfsarchitect.com

STATE OF TEXAS
HERMAN GUNAWAN
78866
LICENSED
PROFESSIONAL ENGINEER
6/11/2020

Signature
Sealed

Date 06/01/20
Scale AS SHOWN
Drawn MO, TO
Job 2020-006

S - 1.3

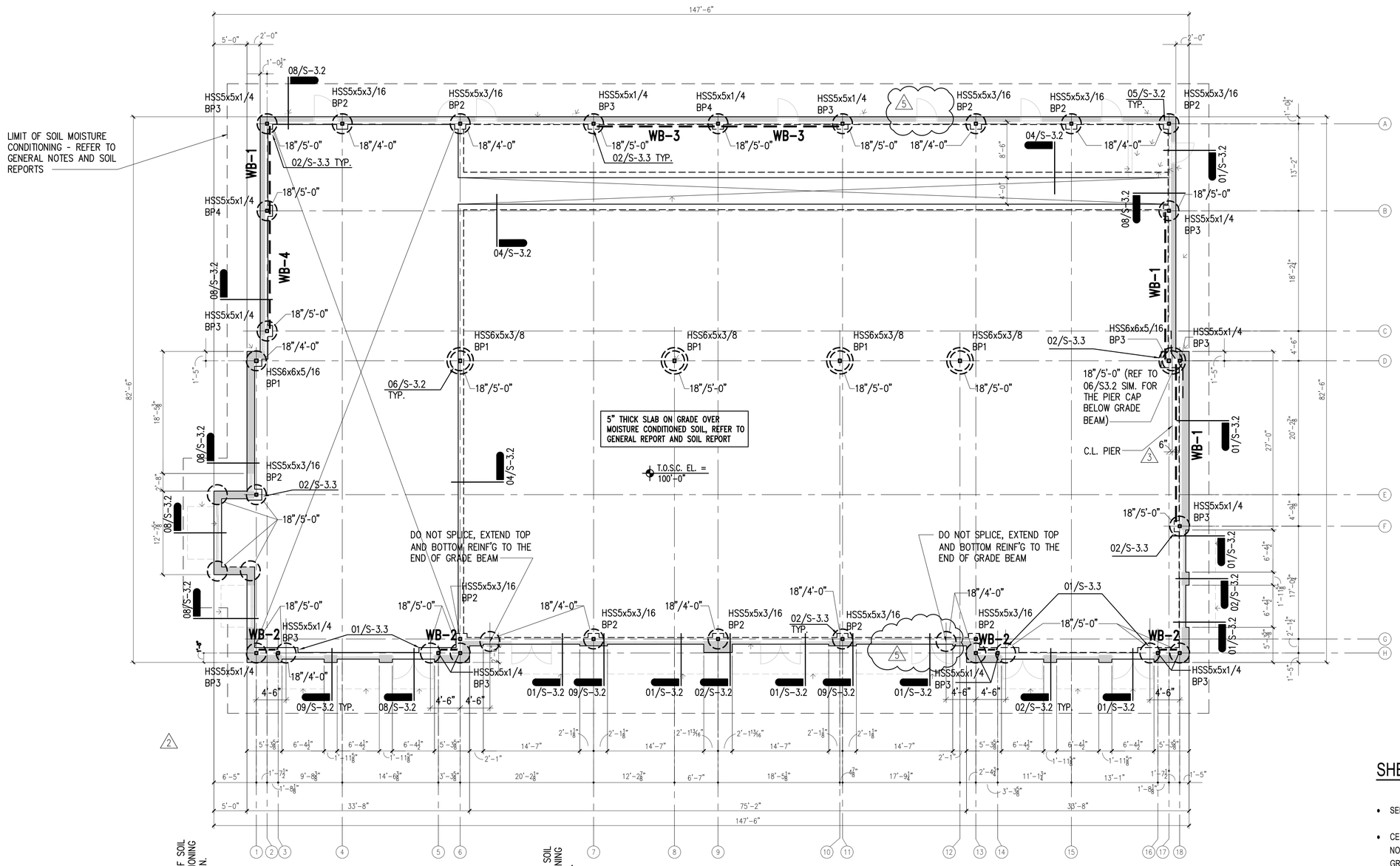

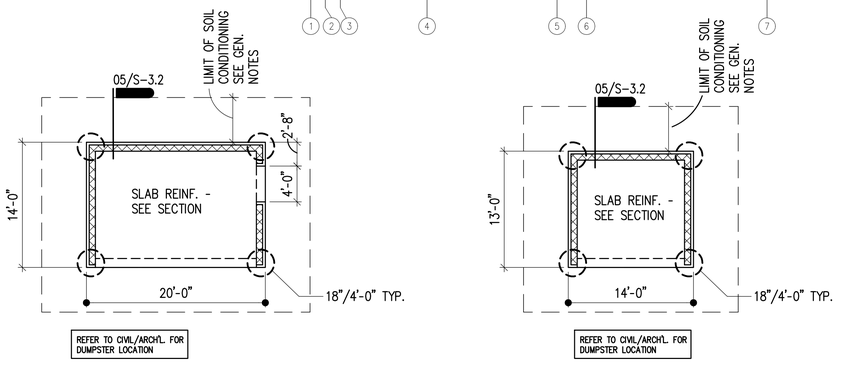

02 DUMPSTER FRAMING PLANS

SCALE: 1/8" = 1'-0"

01 FOUNDATION FRAMING PLAN

SCALE: 1/8" = 1'-0"

SHEET NOTES

- SEE S1.1 THRU S1.2 FOR GENERAL NOTES.
- CENTERLINE OF PIERS NOT SPECIFICALLY LOCATED ON PLAN BY NOTE OR DIMENSION SHALL BE LOCATED U.N.O. BY CENTERLINE OF GRADE BEAM OR WALL IN ONE DIRECTION, GRID AS NOTED IN OTHER DIRECTION AND AT CORNER AND INTERSECTING CONDITIONS OF GRADE BEAMS OR WALLS.
- REFER TO ARCH'L. FOR ANY DIMENSIONS OR INFO. NOT SHOWN.
- VERIFY ALL DIMENSIONS WITH ARCH'L.
- REFER TO CIVIL/ARCH'L. DRAWINGS FOR ACTUAL ELEVATION = 100'-0".
- REFER TO ARCH'L. FOR PLAN NORTH.
- PIERS: SHAFT DIAMETER, 18"/4'-0", PENETRATION; HSS5x5x1/4 BP-5: COLUMN SIZE, BASEPLATE (S-4.1)
- WB-2 — REPRESENTS WIND BRACE (S-5.1)
- REFER TO 07/S-3.2 FOR LIGHT POLE SUPPORT.

GSEI
GroupStructural Engineers Inc.
3626 N. Hall St., Suite 620
Dallas, Texas 75219
Phone: 214-397-0455
TX LICENSE # F-6452
GSEI JOB NO.: 20011

REVISIONS

2	6/26/20 RTU AND SLAB LEAVE OUT REVISION
3	7/30/20 STRUCTURAL CLARIFICATION
5	9/20/20 TENANT REVISIONS

SHELL ONLY

THE SHOPS AT LUCAS

LUCAS, TEXAS 75002

2650 WEST LUCAS ROAD

DONALD F. SOPRANZI AIA, LEED AP ARCHITECT
10300 N Central Expressway
Suite 450 Dallas, Texas 75231
Telephone: 817-903-6663
dons@dfsarchitect.com

STATE OF TEXAS
HERMAN GUNAWAN
78866
LICENSED
PROFESSIONAL ENGINEER
6/1/2020

Signature	
Sealed	
Date	06/01/20
Scale	AS SHOWN
Drawn	MO, TO
Job	2020-006

S - 2.1

GSEI
GroupStructural Engineers Inc.
3626 N. Hall St., Suite 620
Dallas, Texas 75219
Phone: 214-397-0455
TX LICENSE # F-6452
GSEI JOB NO.: 20011

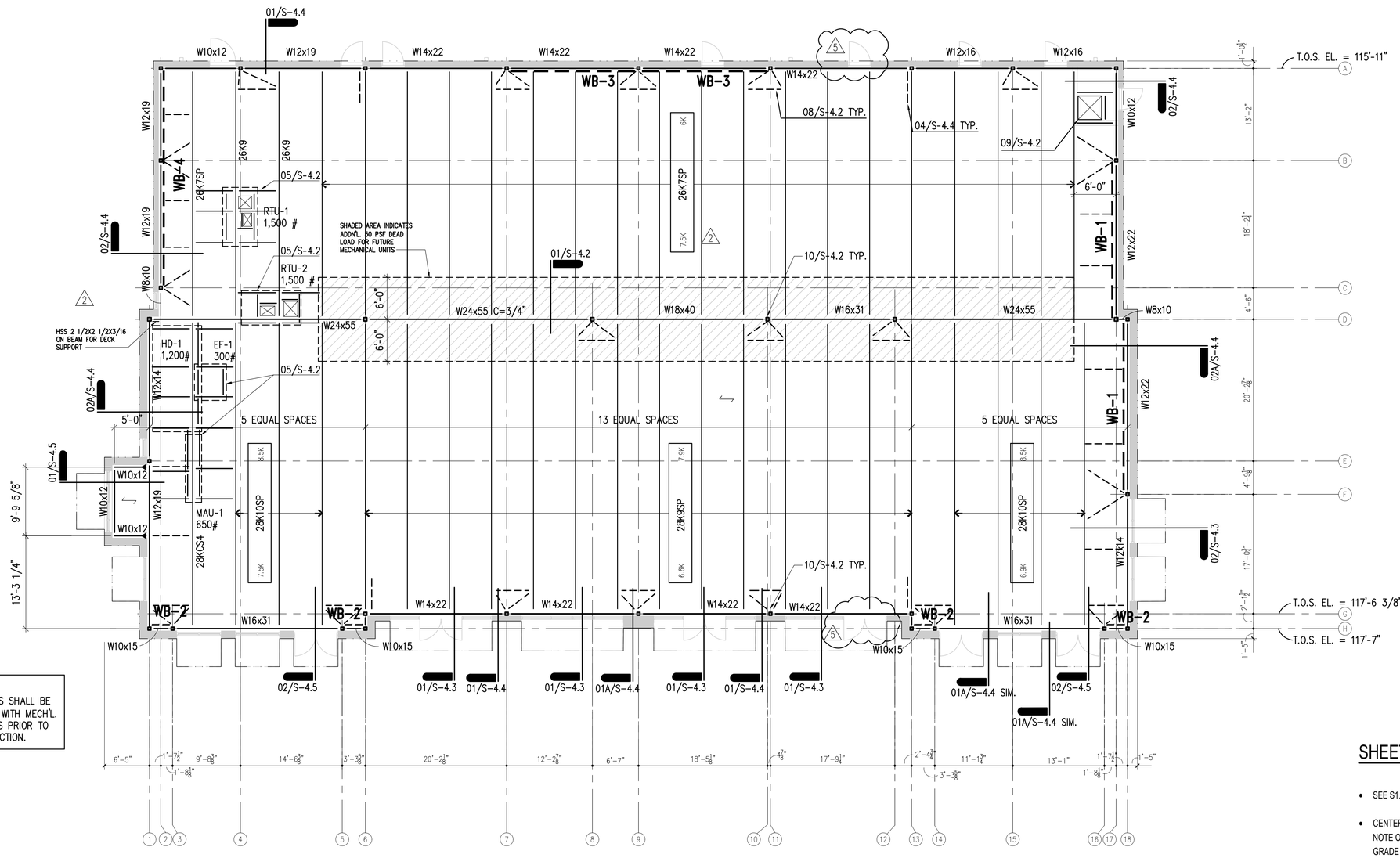

NOTE:
ALL RTU'S SHALL BE VERIFIED WITH MECH'L. DRAWINGS PRIOR TO CONSTRUCTION.

01 ROOF FRAMING PLAN

SCALE: 1/8" = 1'-0"

LOOSE LINTEL SCHEDULE	
SPAN / OPENING	SIZE
UP TO 6'-0"	L 4x4x1/4
6'-0" TO 8'-0"	L 6x4x5/16 (L.L.V.)
8'-0" TO 10'-0"	L 7x4x3/8 (L.L.V.)
NOTE: PROVIDE 8" MINIMUM BEARING @ EA. END	

SHEET NOTES

- SEE S1.1 THRU S1.2 FOR GENERAL NOTES.
- CENTERLINE OF PIERS NOT SPECIFICALLY LOCATED ON PLAN BY NOTE OR DIMENSION SHALL BE LOCATED U.N.O. BY CENTERLINE OF GRADE BEAM OR WALL IN ONE DIRECTION, GRID AS NOTED IN OTHER DIRECTION AND AT CORNER AND INTERSECTING CONDITIONS OF GRADE BEAMS OR WALLS.
- REFER TO ARCH'L. FOR ANY DIMENSIONS OR INFO. NOT SHOWN.
- VERIFY ALL DIMENSIONS WITH ARCH'L.
- REFER TO CIVIL/ARCH'L. DRAWINGS FOR ACTUAL ELEVATION = 100'-0".
- REFER TO ARCH'L. FOR PLAN NORTH.
- WB-2 REPRESENTS WIND BRACE (S5.01)
- REFER TO 07/S-3.2 FOR LIGHT POLE SUPPORT.
- REPRESENTS MOMENT CONNECTION

REVISIONS
2 6/26/20 RTU AND SLAB LEAVE OUT REVISION
5 9/20/20 TENANT REVISIONS

SHELL ONLY
THE SHOPS AT LUCAS
LUCAS, TEXAS 75002
2650 WEST LUCAS ROAD

10300 N Central Expressway
Suite 450 Dallas, Texas 75231
Telephone: 817-903-6663
dons@dfsarchitect.com
DONALD F. SOPRANZI, AIA, LEED AP ARCHITECT

STATE OF TEXAS
HERMAN GUNAWAN
78866
LICENSED
REGISTERED ARCHITECT
6/1/2020

Signature
Sealed
Date 06/01/20
Scale AS SHOWN
Drawn MO, TO
Job 2020-006

S - 2.2

GSEI
GroupStructural Engineers Inc.
3626 N. Hall St., Suite 620
Dallas, Texas 75219
Phone: 214-397-0455
TX LICENSE # F-6452
GSEI JOB NO.: 20011

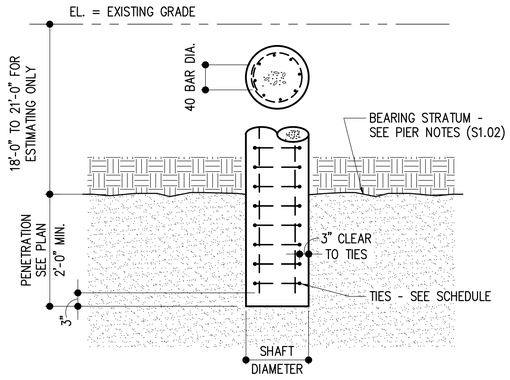

PIER REINFORCING SCHEDULE (CASED)		
SHAFT DIAMETER	VERTICAL BAR	TIES
18"	7#5	#4@12"

DRILLED PIER NOTES

1. FOUNDATION DESIGN IS BASED ON AN ALLOWABLE VALUE OF 50,000 PSF IN END BEARING AND 7,000 PSF SKIN FRICTION IN COMPRESSION RECOMMENDED IN THE PRELIMINARY SOIL REPORT PREPARED BY ALPHA TESTING, INC. DATED MAY 27, 2020, REPORT NO. G201275.
2. BEARING STRATUM SHOWN ON THE PIER DETAIL 01/S-3.1 IS GRAY SHALY LIMESTONES
3. THE PIER TYPES ARE INDICATED ON THE FOUNDATION PLAN.
4. PIER SIZES, REINFORCING, AND DEPTHS ARE SHOWN IN THE PIER SCHEDULE.
5. ALL PIER INSTALLATIONS SHALL BE INSPECTED BY TESTING LAB.
6. THE DEPTHS OF PIERS SHALL BE VERIFIED BEFORE PIER STEEL IS CUT. PIER STEEL SHALL BE DELIVERED TO THE JOBSITE IN STANDARD STOCK LENGTHS AND CUT AS REQUIRED TO MATCH WITH THE ACTUAL FIELD MEASURED DEPTH OF THE PIER. SPLICES IN VERTICAL REINFORCING SHALL BE 62 BAR DIAMETERS, AND REINFORCING SHALL EXTEND TO 3 INCHES FROM BOTTOM OF HOLE.
7. THE CONTRACTOR AND TESTING LAB SHALL TAKE ACCURATE MEASUREMENTS OF THE PIER DEPTH AND SUBMIT A REPORT OF PIER DEPTHS TO THE A/E.
8. REINFORCING STEEL SHOP DRAWINGS SHALL INCLUDE DRAWINGS FOR PLACING OF TEMPLATES TO SET DOWELS IN PIERS.
9. PIER HOLES SHALL BE COMPLETED AND FILLED WITH CONCRETE WITHIN 6 HOURS AFTER THE START OF ANY DRILLING IN THE PENETRATION ZONE.
10. ELEVATION OF TOP OF PIERS, WHERE NOT GIVEN, IS AT THE BOTTOM OF THE DEEPEST INTERSECTING BEAM OR WALL SUPPORTED BY THE PIER. CONTRACTOR SHALL CALCULATE ALL TOP OF PIER ELEVATIONS BEFORE PROCEEDING WITH THE PIER DRILLING OPERATION.
11. REMOVE EXCESS CONCRETE AT THE TOP OF THE PIER DIAMETER. FORM SIDOF PIER EXTENSIONS TO THE SAME DIAMETER AS SHAFT BELOW.
12. CONTRACTOR SHALL PROVIDE ADDITIONAL PIER REINFORCING STEEL (TIES AND VERTICAL REINFORCING), AS REQUIRED TO FACILITATE PLACEMENT OF THE REINFORCING CAGE WITHOUT BUCKLING, COLLAPSING OR EXCESSIVE DEFLECTION.
13. TEMPORARY CASING SALL BE USED WHERE GROUND WATER SEEPAGE ENCOUNTERED.

01 TYPICAL DRILLED PIER
SCALE: NONE

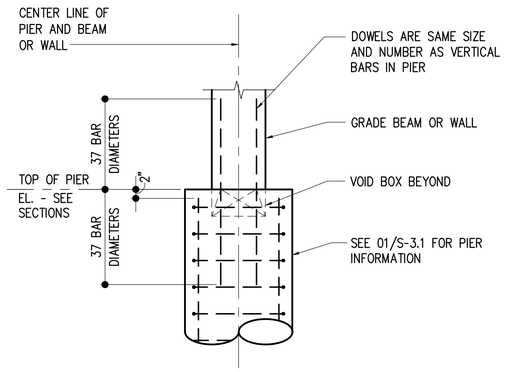

02 TYPICAL GRADE BEAM TO PIER
SCALE: NONE

SLAB-ON-GRADE NOTES:
1. SEE GENERAL NOTES FOR THICKNESS OF SLAB AND REINFORCING.
2. REINFORCING TO BE LAPPED 30 BAR DIA. MINIMUM.
3. SEE OTHER DETAILS FOR CONDITIONS AT EXPANSION JOINTS, GRADE BEAMS AND COLUMNS.
4. SEE SPECIFICATIONS FOR REINFORCING SUPPORT.

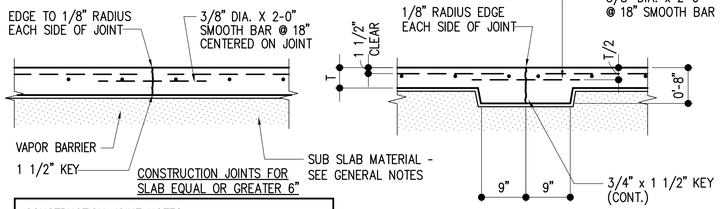

CONSTRUCTION JOINT NOTES:
1. SLAB SHALL BE POURED IN A STRIP PATTERN AT MAX. SPACING AS SHOWN IN C.J. PLAN.
2. IF METAL FORMS ARE USED, REMOVE THEM BEFORE POURING ADJACENT SLAB.
3. PROVIDE A CONSTRUCTION JOINT ON THE CENTER LINE OF COLUMNS. (WHERE OCCURS)
4. INFILL STRIPS CAN BE PLACED AFTER INITIAL SLAB STRIPS HAVE CURED OF 3 DAYS.
5. PROVIDE 8"(MIN.) THICKENED SLAB 1'-6" WIDE AT JOINT WHERE SLAB THICK. IS LESS THAN 6".

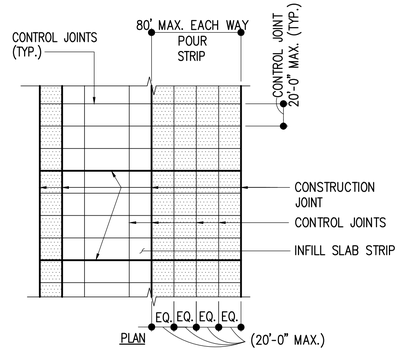

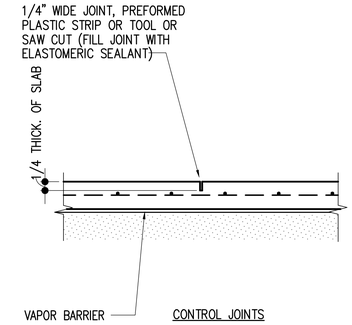

03 TYP. CONSTRUCTION & CONTROL JOINTS
SCALE: NONE

CONTROL JOINT NOTES:
1. JOINTS ARE REQUIRED IN ALL EXPOSED SLABS AT A MAX. SPACING AS SHOWN IN PLAN. LOCATE JOINTS ON COL. CENTERLINES.
2. SAW CUTS ARE TO BE MADE AS SOON AS SLAB CAN SUPPORT WORKERS AND EQUIPMENT AND BEFORE SHRINKAGE CRACKS OCCUR.
3. FOLLOW MFR'S. INSTRUCTIONS ON TOP REMOVEABLE PORTION OF PREFORMED PLASTIC JOINT STRIPS.
4. CLEAN JOINTS BEFORE FILLING WITH SEALANT.

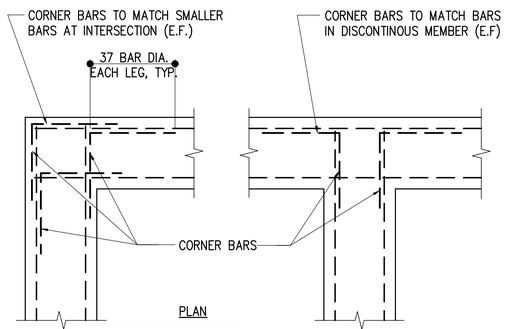

NOTE:
CORNER BARS TO MATCH SIZE AND LOCATION OF ALL HORIZONTAL GRADE BEAM BARS EXCEPT HOOKED TOP AND BOTTOM BARS. TURN HOOKS SIDEWAYS.

04 TYPICAL INTERSECTION CORNER BARS
SCALE: NONE

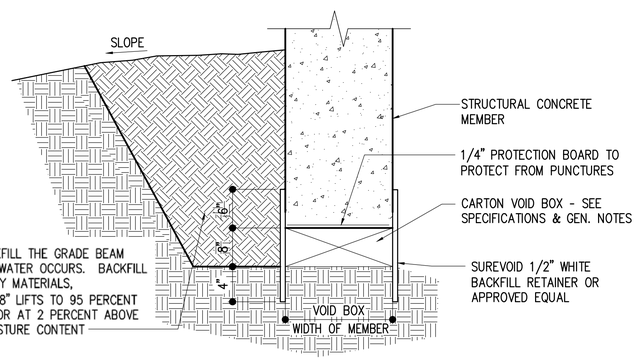

05 TYPICAL CARTON FORM VOID
SCALE: NONE

CORNER BAR NOTES:
ALL CONCRETE SLAB-ON-GRADE AND ELEVATED STRUCTURAL SLABS MUST HAVE CORNER BARS AS SHOWN IN THESE DETAILS.

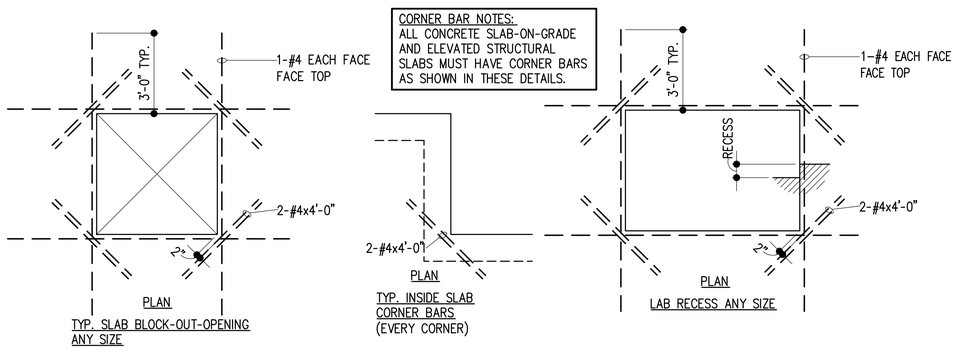

06 TYPICAL CRACK CONTROL CORNER BARS IN CONCRETE SLAB
SCALE: NONE

REVISIONS

SHELL ONLY
THE SHOPS AT LUCAS
LUCAS, TEXAS 75002
2650 WEST LUCAS ROAD

DONALD E. SOPRANZI AIA, LEED AP ARCHITECT
10300 N Central Expressway
Suite 450 Dallas, Texas 75231
Telephone: 817-903-6663
dons@dfsarchitect.com

STATE OF TEXAS
HERMAN GUNAWAN
78866
LICENSED PROFESSIONAL ENGINEER
6/1/2020

Signature
Sealed
Date 06/01/20
Scale AS SHOWN
Drawn MO, TO
Job 2020-006

S - 3.1

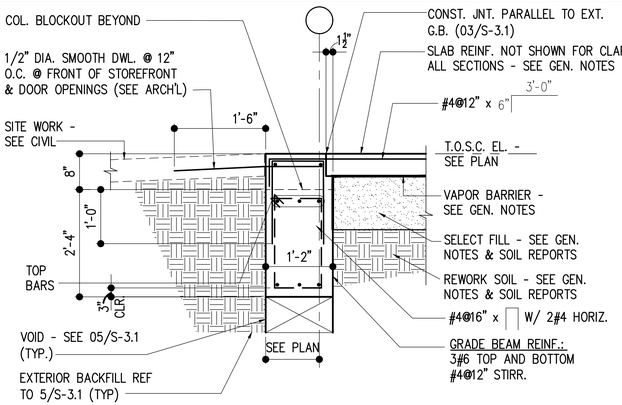

NOTE:
- ALL GRADE BEAMS SHALL BE FORMED AND NOT CAST IN EARTHEN TRENCHES (SEE SOIL REPORTS)

01 SECTION
SCALE: NO SCALE

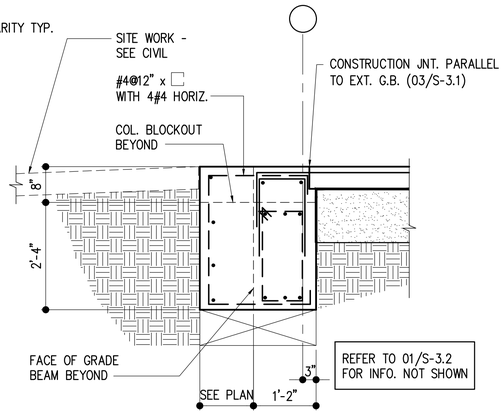

02 SECTION
SCALE: NO SCALE

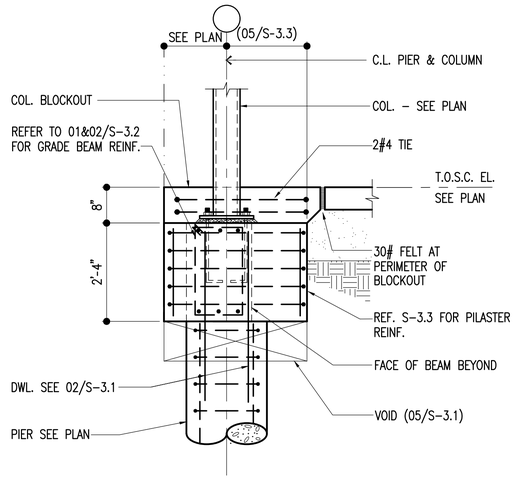

03 DETAIL
SCALE: NO SCALE

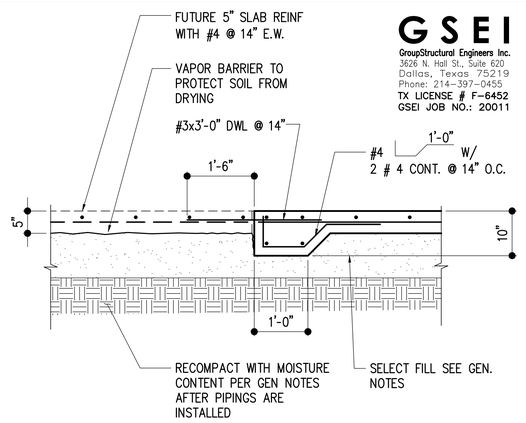

04 DETAIL
SCALE: NO SCALE

05 DUMPSTER SECTION
SCALE: NO SCALE

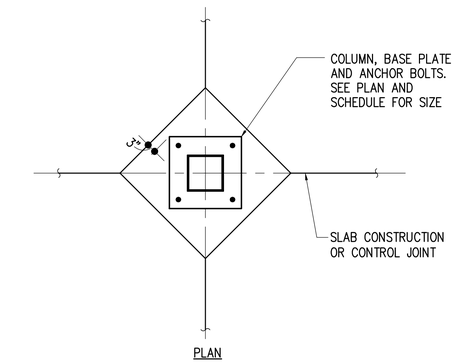

PLAN

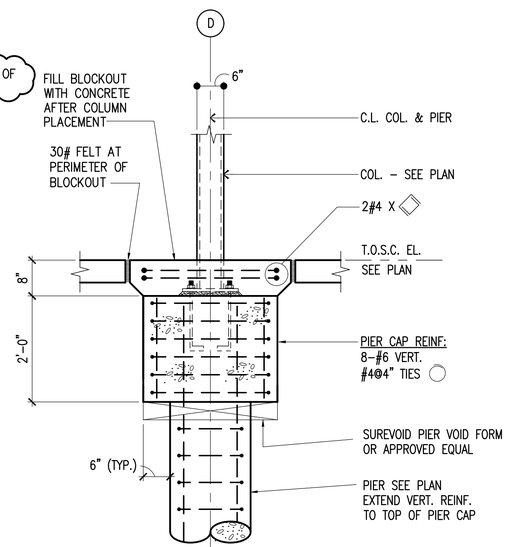

06 SLAB BLOCKOUT FOR INT. COLUMN
SCALE: NO SCALE

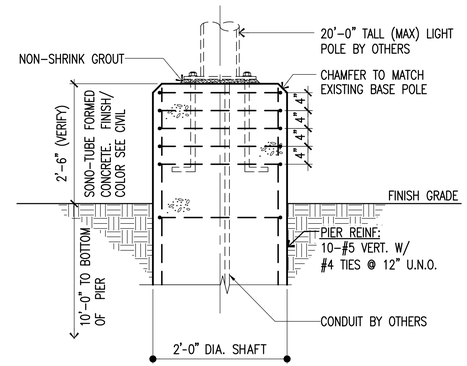

LIGHT POLE SUPPORT (BELL PIER)

07 TYPICAL DETAIL
SCALE: NO SCALE

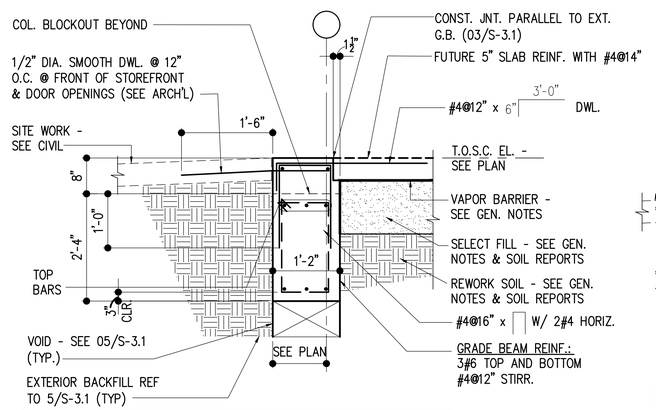

NOTE:
- ALL GRADE BEAMS SHALL BE FORMED AND NOT CAST IN EARTHEN TRENCHES (SEE SOIL REPORTS)

08 SECTION
SCALE: NO SCALE 2

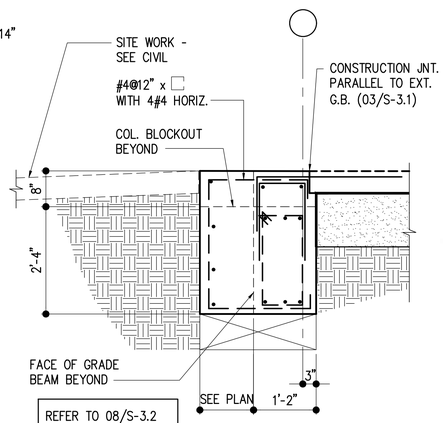

09 SECTION 2
SCALE: NO SCALE

GSEI
GroupStructural Engineers Inc.
3626 N. Hall St., Suite 620
Dallas, Texas 75219
Phone: 214-397-0455
TX LICENSE # F-6452
GSEI JOB NO.: 20011

REVISIONS
2 6/26/20 RTU AND SLAB LEAVE OUT REVISION
3 7/30/20 STRUCTURAL CLARIFICATION

SHELL ONLY
THE SHOPS AT LUCAS
LUCAS, TEXAS 75002
2650 WEST LUCAS ROAD

10300 N Central Expressway
Suite 450 Dallas, Texas 75231
Telephone: 817-903-6663
dons@dfsarchitect.com
DONALD F. SOPRANZI AIA, LEED AP ARCHITECT

STATE OF TEXAS
HERMAN GUNAWAN
78866
LICENSED
REGISTERED ARCHITECT
6/1/2020

Signature
Sealed
Date 06/01/20
Scale AS SHOWN
Drawn MO, TO
Job 2020-006

S - 3.2

GSEI
GroupStructural Engineers Inc.
3626 N. Hall St., Suite 620
Dallas, Texas 75219
Phone: 214-397-0455
TX LICENSE # F-6452
GSEI JOB NO.: 20011

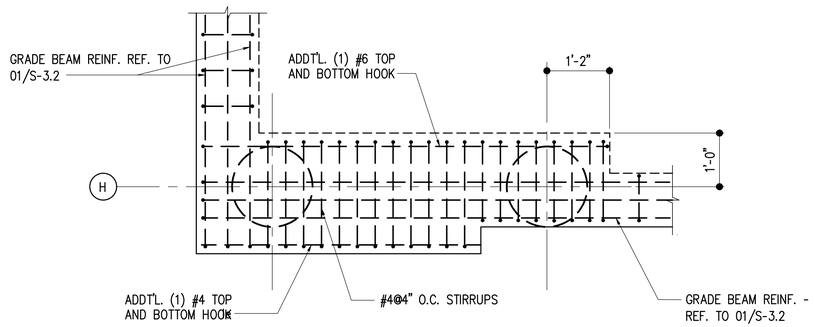

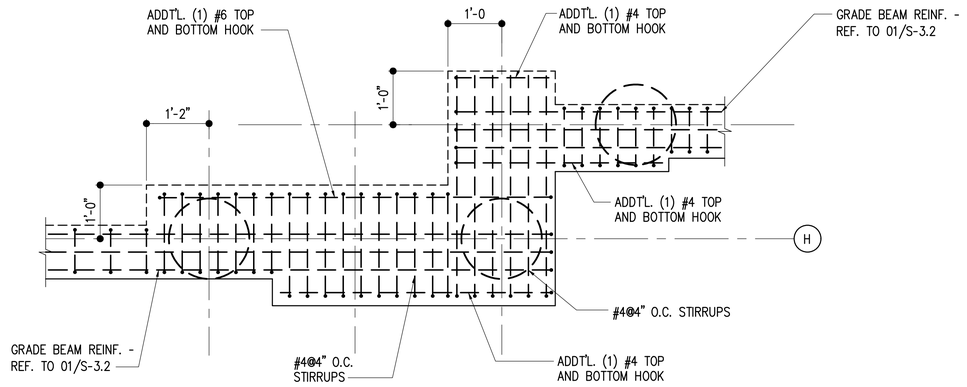

01 PLAN
UNIQUE PILASTER DETAIL
SCALE: NO SCALE

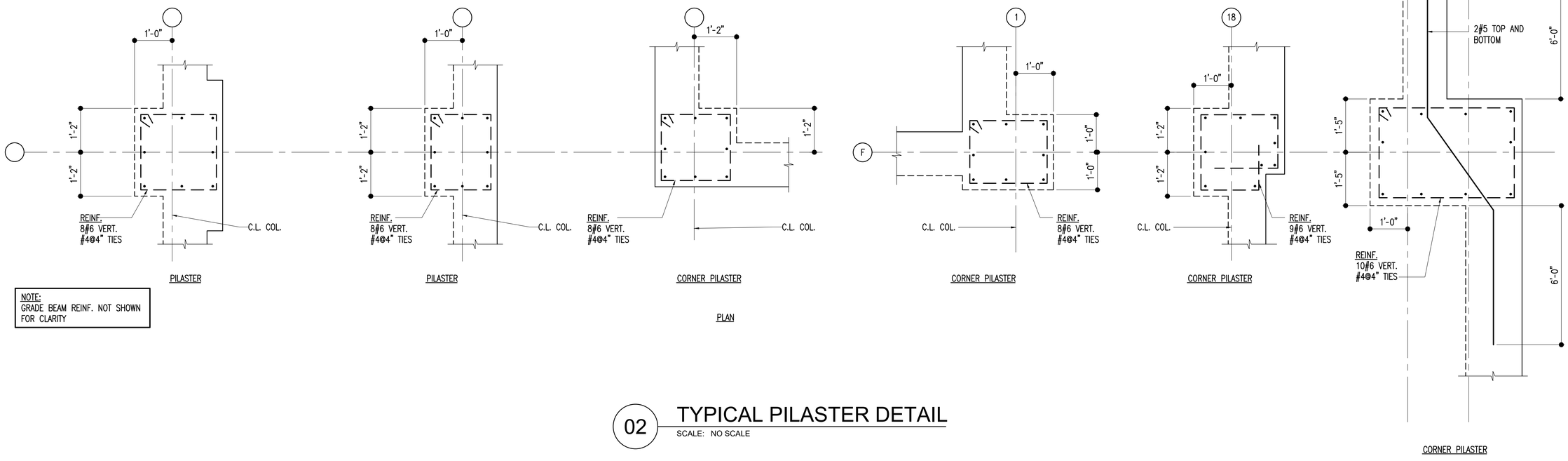

NOTE:
GRADE BEAM REINF. NOT SHOWN FOR CLARITY

PLAN

02
TYPICAL PILASTER DETAIL
SCALE: NO SCALE

REVISIONS

SHELL ONLY
THE SHOPS AT LUCAS
LUCAS, TEXAS 75002
2650 WEST LUCAS ROAD

10300 N Central Expressway
Suite 450 Dallas, Texas 75231
Telephone: 817-903-6663
dons@dfsarchitect.com
DONALD F. SOPRANZI AIA, LEED AP ARCHITECT

STATE OF TEXAS
HERMAN GUNAWAN
78866
LICENSED
PROFESSIONAL ENGINEER
6/1/2020

Signature
Sealed
Date 06/01/20
Scale AS SHOWN
Drawn MO, TO
Job 2020-006

S - 3.3

BASE PLATE SCHEDULE

MARK	DIMENSIONS					BOLTS – NUMBER, SIZE AND EMBEDMENT LENGTH	ANCHOR BOLT CONFIG.
	B	N	X	Y	THICKNESS		
BP1	14"	14"	5"	5"	1 1/4"	(4) 1" DIA. x 1'–6"	03 AND 04/S4.1
BP2	12"	12"	4"	4"	3/4"	(4) 3/4" DIA. x 1'–6"	03 AND 04/S4.1
BP3	16"	12"	4 1/2"	4"	1"	(4) 1" DIA. x 1'–0"	06 AND 05/S4.1
BP4	19"	12"	4 1/2"	4"	1"	(4) 1" DIA. x 1'–0"	06 AND 05/S4.1

01 BASEPLATE SCHEDULE
SCALE: NONE

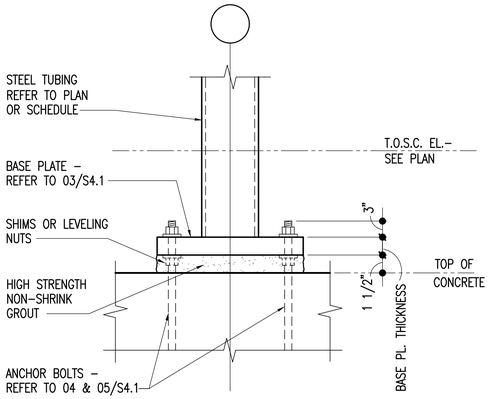

02 COLUMN BASEPLATE
SCALE: NONE

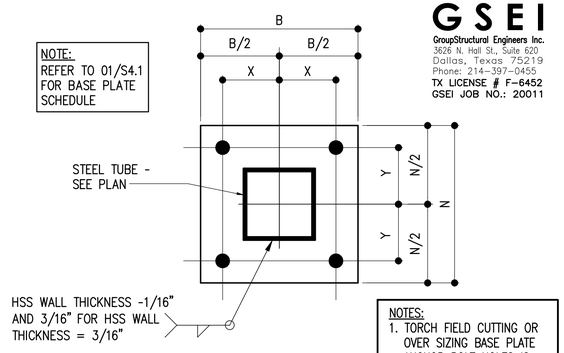

03 COLUMN BASEPLATE
SCALE: NONE

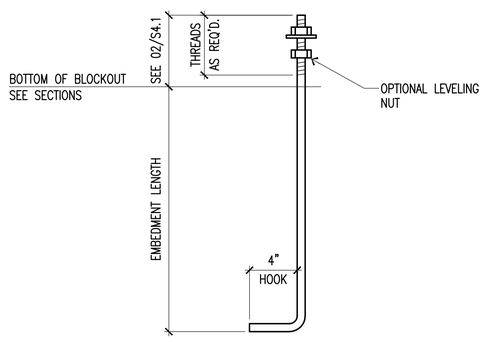

04 ANCHOR BOLT
SCALE: NONE

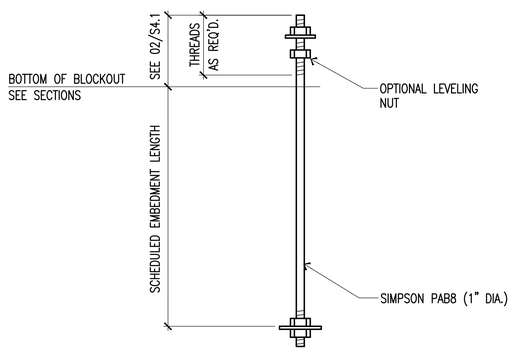

05 ANCHOR BOLT
SCALE: NONE

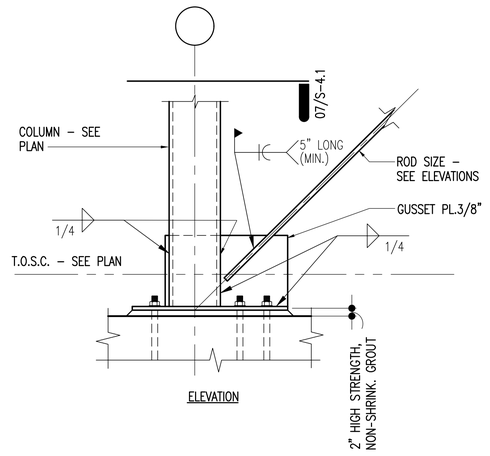

06 COLUMN BASEPLATE
SCALE: NONE

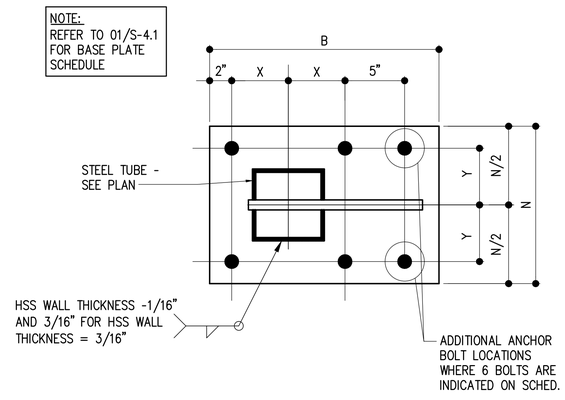

07 COLUMN BASEPLATE
SCALE: NONE

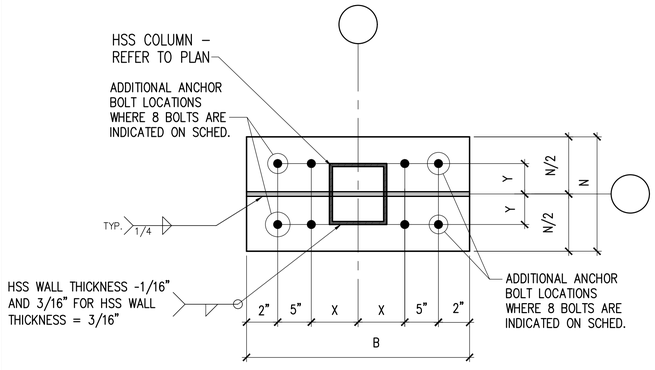

COLUMN BASE PLATE – PLAN
08 TYPICAL DETAIL
SCALE: NO SCALE

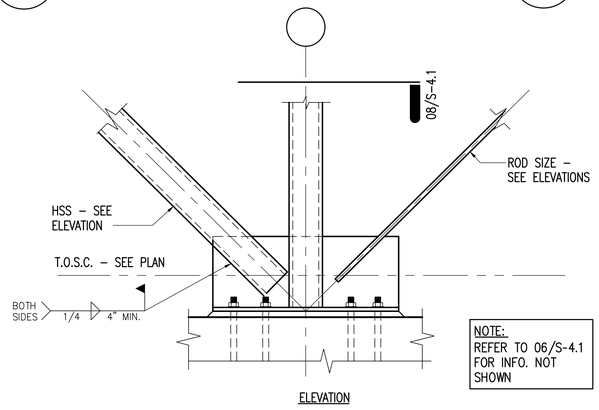

09 COLUMN BASEPLATE
SCALE: NONE

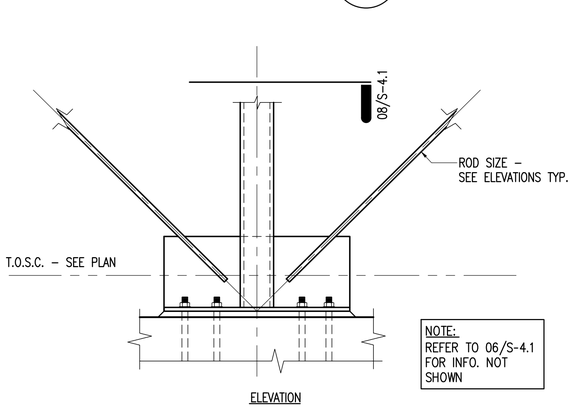

10 COLUMN BASEPLATE
SCALE: NONE

GSEI
GroupStructural Engineers Inc.
3626 N. Hall St., Suite 620
Dallas, Texas 75219
Phone: 214-397-0455
TX LICENSE # F-6452
GSEI JOB NO.: 20011

REVISIONS

SHELL ONLY
THE SHOPS AT LUCAS
LUCAS, TEXAS 75002
2650 WEST LUCAS ROAD

10300 N Central Expressway
Suite 450 Dallas, Texas 75231
Telephone: 817-903-6663
dons@dfsarchitect.com
DONALD F. SOPRANZI, AIA, LEED-AP, ARCHITECT

STATE OF TEXAS
HERMAN GUNAWAN
78866
LICENSED
ARCHITECT
6/1/2020

Signature
Sealed
Date 06/01/20
Scale AS SHOWN
Drawn MO, TO
Job 2020-006

S - 4.1

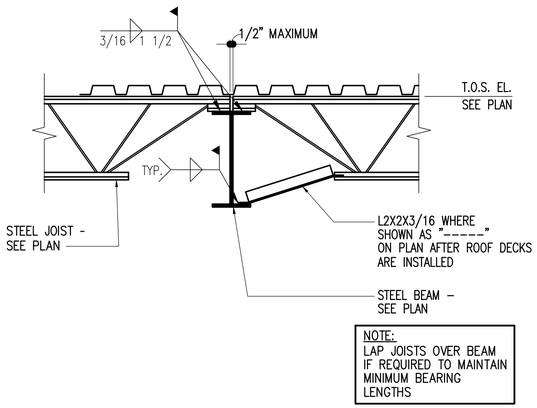

01 JOIST BEARING ON BEAM

SCALE: NONE

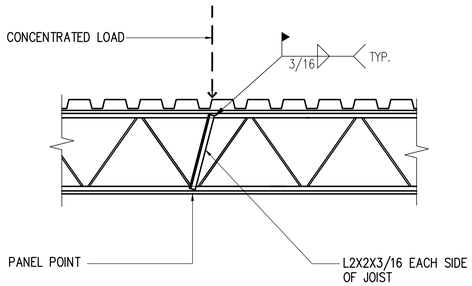

CONCENTRATED LOAD

02 TYPICAL DETAIL

SCALE: NONE

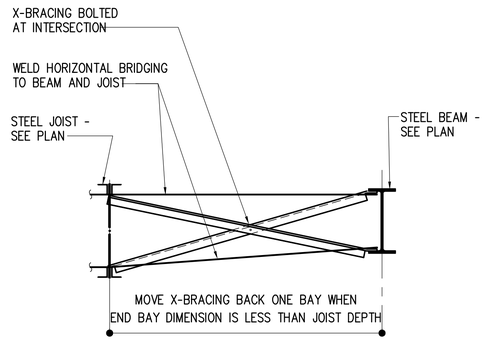

END BAY BRIDGING

03 TYPICAL DETAIL

SCALE: NONE

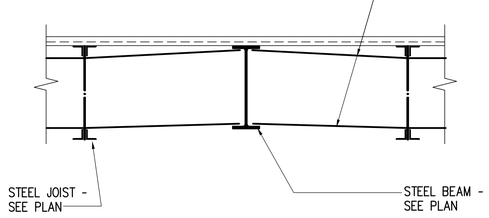

JOIST PARALLEL TO BEAM

04 TYPICAL DETAIL

SCALE: NONE

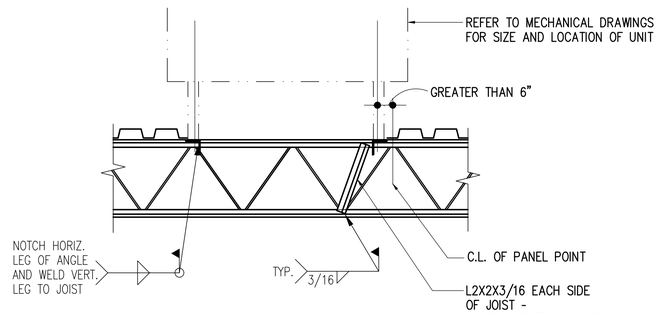

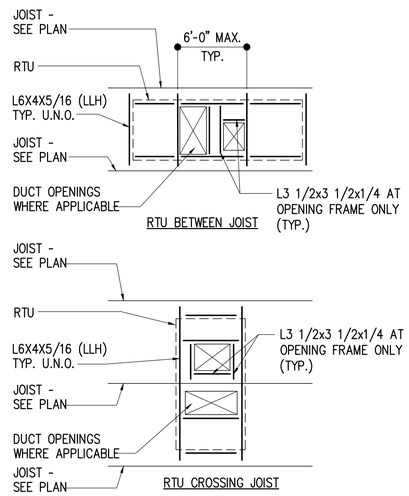

05 TYPICAL RTU FRAMING

SCALE: NONE

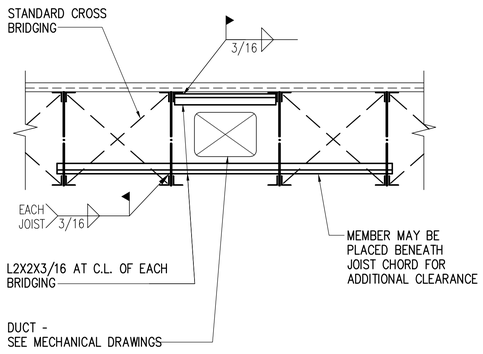

06 TYPICAL DUCT OPENING

SCALE: NONE

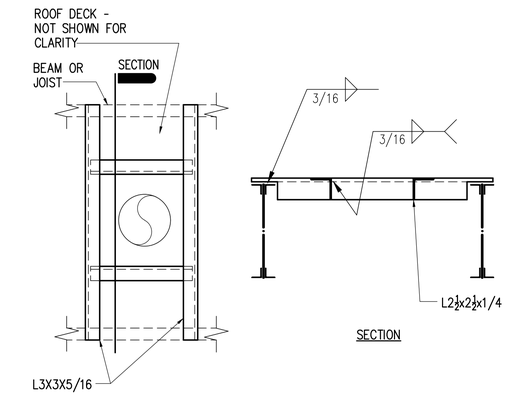

FOR DRAINS BETWEEN 6" AND 24" WIDE

07 TYP. ROOF DRAIN FRAMING

SCALE: NONE

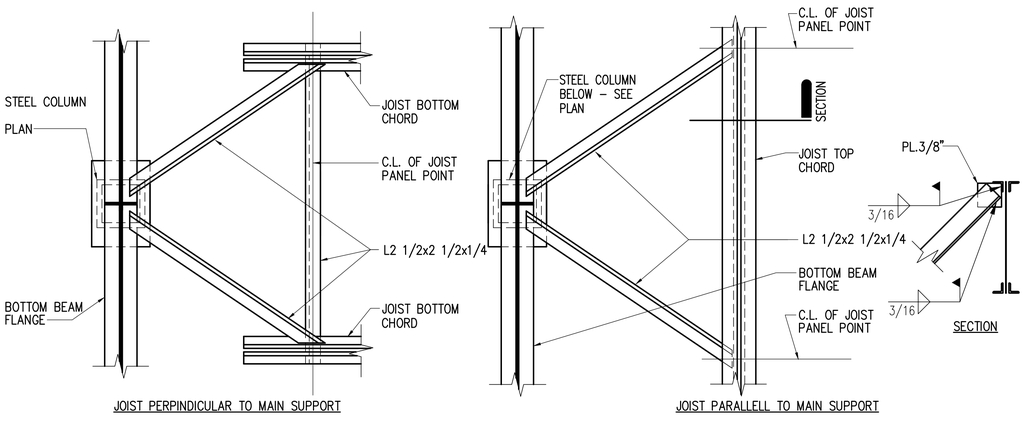

08 TYPICAL COLUMN BRACING

SCALE: NONE

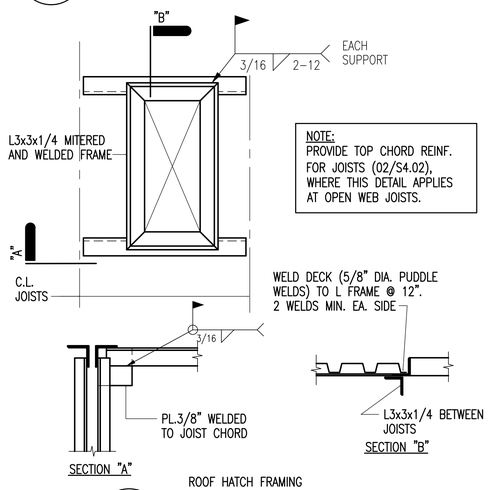

ROOF HATCH FRAMING

09 TYPICAL DETAIL

SCALE: NONE

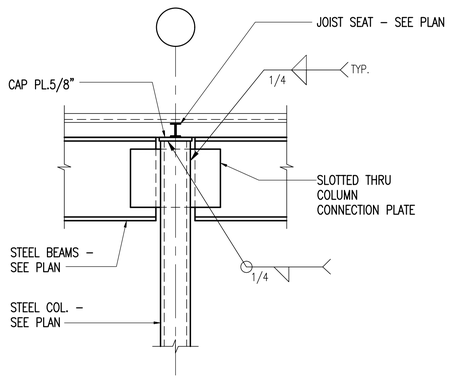

BEAM TO COLUMN CONNECTION

10 TYPICAL DETAIL

SCALE: NONE

GSEI
GroupStructural Engineers Inc.
3626 N. Hall St., Suite 620
Dallas, Texas 75219
Phone: 214-397-0455
TX LICENSE # F-6452
GSEI JOB NO.: 20011

REVISIONS

SHELL ONLY

THE SHOPS AT LUCAS

LUCAS, TEXAS 75002

2650 WEST LUCAS ROAD

10300 N Central Expressway
Suite 450 Dallas, Texas 75231
Telephone: 817-903-6663
dons@dfsarchitect.com
DONALD F. SOPRANZI MA, LEED AP ARCHITECT

STATE OF TEXAS
HERMAN GUNAWAN
78866
LICENSED
PROFESSIONAL ENGINEER
6/1/2020

Signature

Sealed

Date 06/01/20

Scale AS SHOWN

Drawn MO, TO

Job 2020-006

S - 4.2

GSEI
GroupStructural Engineers Inc.
3626 N. Hall St., Suite 620
Dallas, Texas 75219
Phone: 214-397-0455
TX LICENSE # F-6452
GSEI JOB NO.: 20011

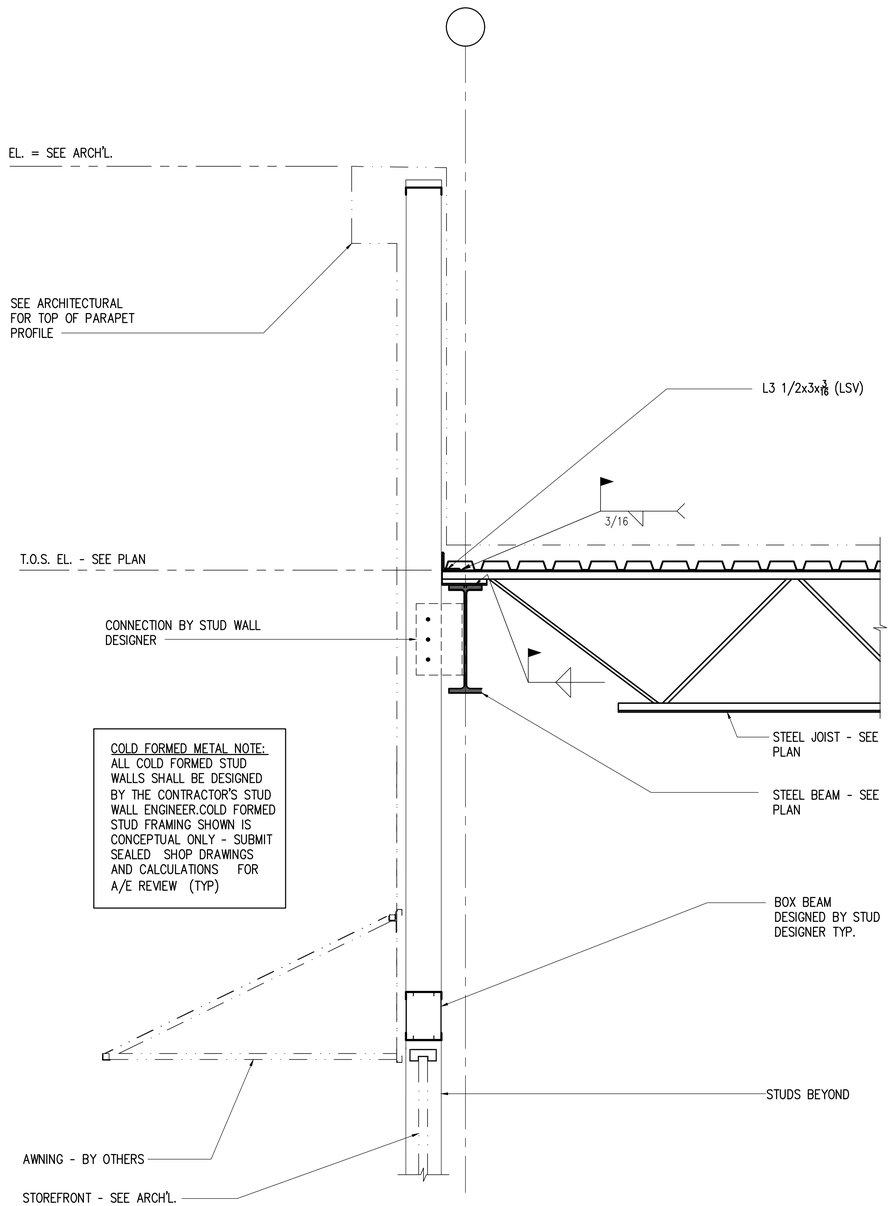

01 SECTION
SCALE: NONE

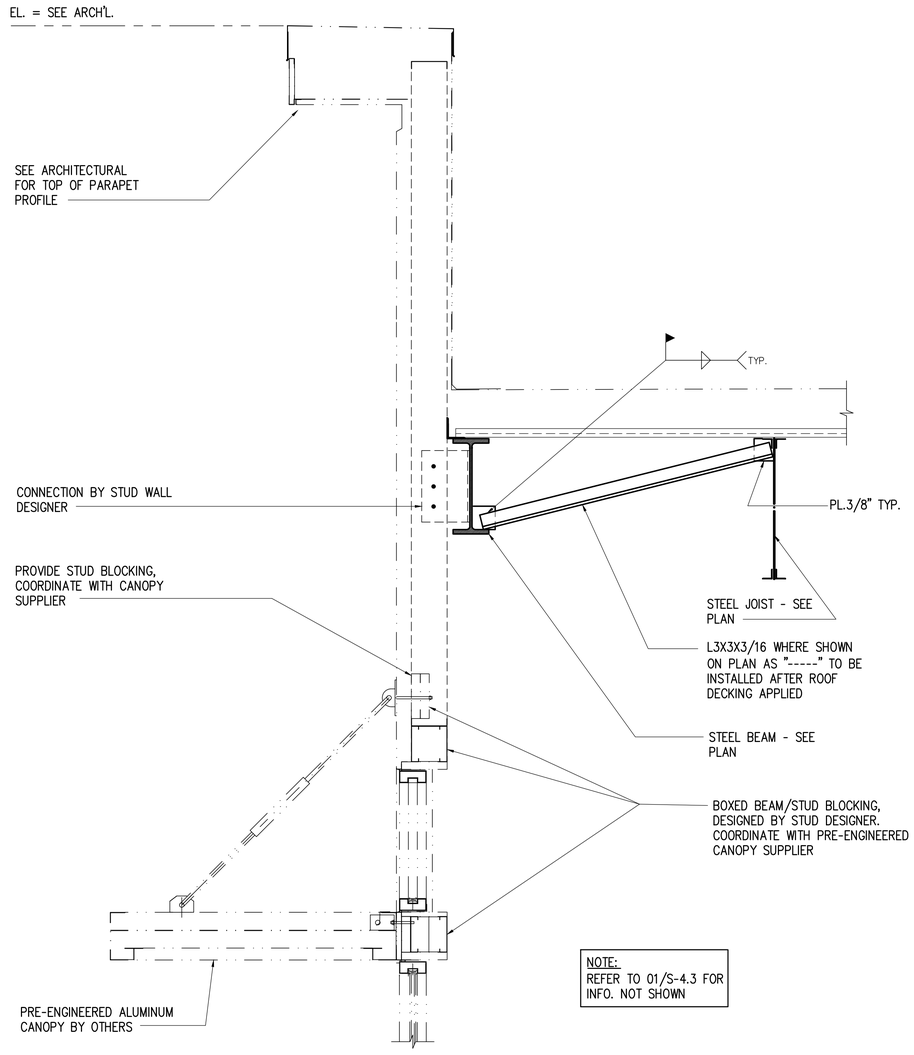

02 SECTION
SCALE: NONE

REVISIONS

SHELL ONLY
THE SHOPS AT LUCAS
LUCAS, TEXAS 75002
2650 WEST LUCAS ROAD

DONALD F. SOPRANZI AIA, LEED AP ARCHITECT
10300 N Central Expressway
Suite 450 Dallas, Texas 75231
Telephone: 817-903-6663
dons@dfsarchitect.com

STATE OF TEXAS
HERMAN GUNAWAN
78866
LICENSED
PROFESSIONAL ENGINEER
6/1/2020

Signature
Sealed
Date 06/01/20
Scale AS SHOWN
Drawn MO, TO
Job 2020-006

S - 4.3

GSEI
GroupStructural Engineers Inc.
3626 N. Hall St., Suite 620
Dallas, Texas 75219
Phone: 214-397-0455
TX LICENSE # F-6452
GSEI JOB NO.: 20011

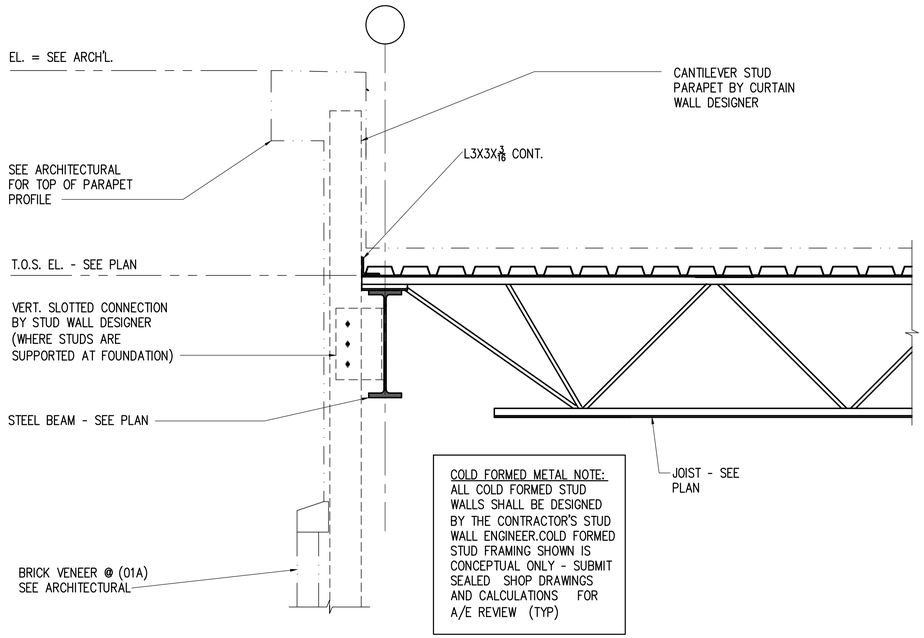

01 01A SECTION
SCALE: NONE

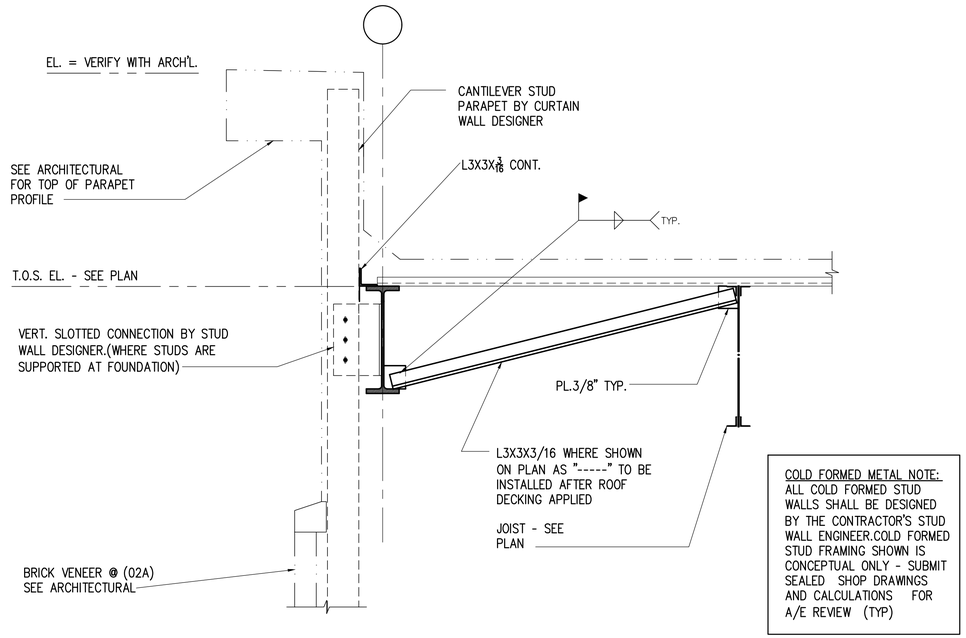

02 02A SECTION
SCALE: NONE

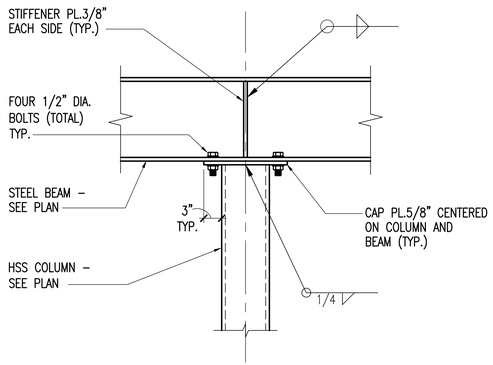

BOLTED CAP PLATE
03 TYPICAL DETAIL
SCALE: NONE

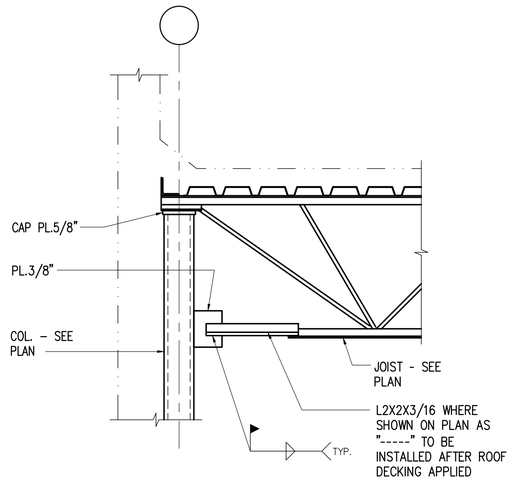

04 TYPICAL DETAIL
SCALE: NONE

REVISIONS

SHELL ONLY
THE SHOPS AT LUCAS
LUCAS, TEXAS 75002
2650 WEST LUCAS ROAD

10300 N Central Expressway
Suite 450 Dallas, Texas 75231
Telephone: 817-903-6663
dons@dfsarchitect.com
DONALD F. SOPRANZI, MA, LEED AP, ARCHITECT

STATE OF TEXAS
HERMAN GUNAWAN
78866
LICENSED
PROFESSIONAL ENGINEER
6/1/2020

Signature
Sealed
Date 06/01/20
Scale AS SHOWN
Drawn MO, TO
Job 2020-006

S - 4.4

GSEI
GroupStructural Engineers Inc.
3626 N. Hall St., Suite 620
Dallas, Texas 75219
Phone: 214-397-0455
TX LICENSE # F-6452
GSEI JOB NO.: 20011

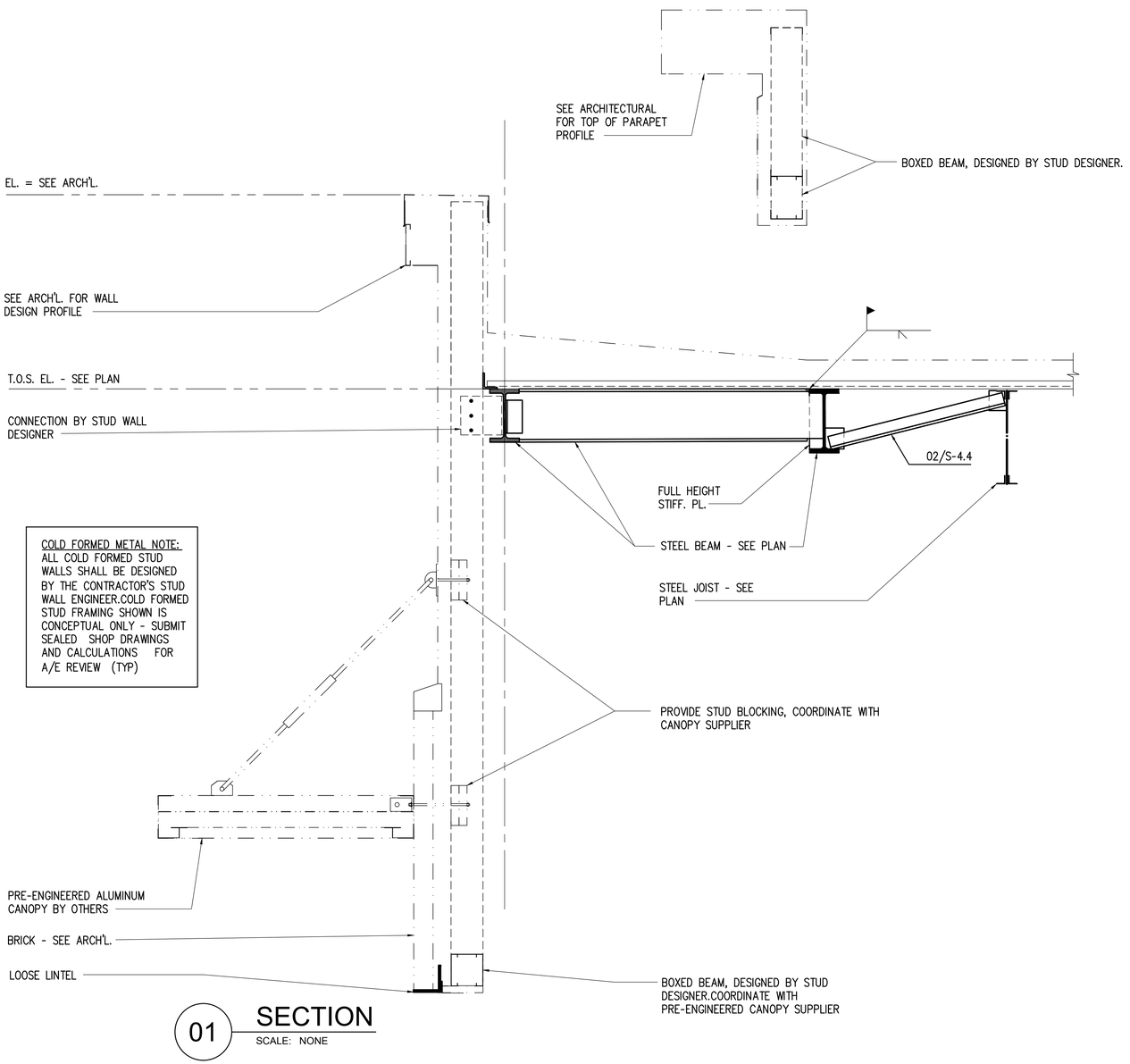

01 SECTION
SCALE: NONE

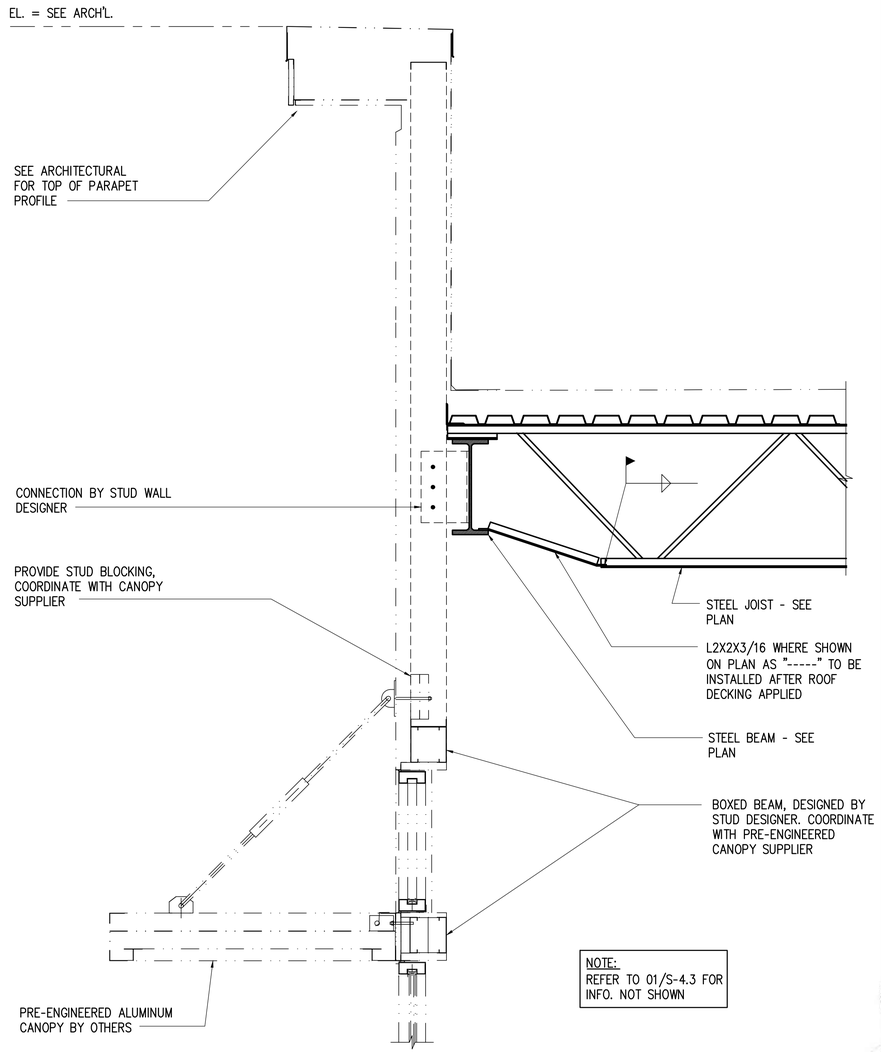

02 SECTION
SCALE: NONE

REVISIONS

SHELL ONLY

THE SHOPS AT LUCAS

LUCAS, TEXAS 75002

2650 WEST LUCAS ROAD

DONALD F. SOPRANZI, MA, LEED AP, ARCHITECT
10300 N Central Expressway
Suite 450 Dallas, Texas 75231
Telephone: 817-903-6663
dons@dfsarchitect.com

STATE OF TEXAS
HERMAN GUNAWAN
78866
LICENSED
PROFESSIONAL ENGINEER
6/1/2020

Signature

Sealed

Date 06/01/20

Scale AS SHOWN

Drawn MO, TO

Job 2020-006

S - 4.5

GSEI
GroupStructural Engineers Inc.
3626 N. Hall St., Suite 620
Dallas, Texas 75219
Phone: 214-397-0455
TX LICENSE # F-6452
GSEI JOB NO.: 20011

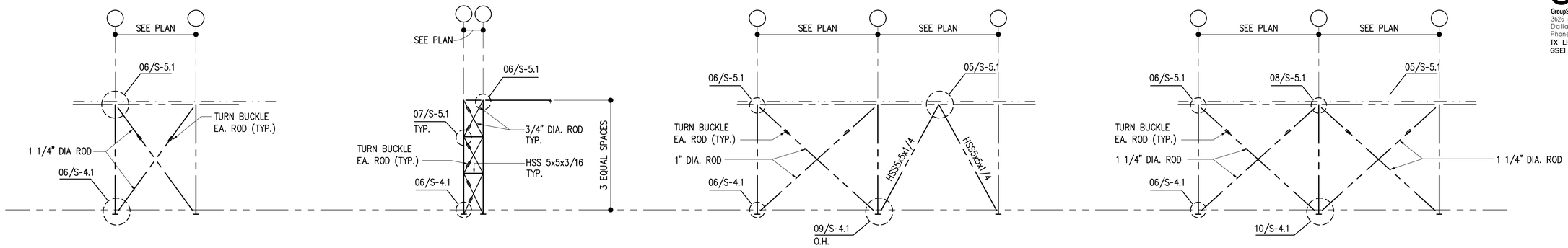

01 WB-1
SCALE: NONE

02 WB-2
SCALE: NONE

03 WB-3
SCALE: NONE

04 WB-4
SCALE: NONE

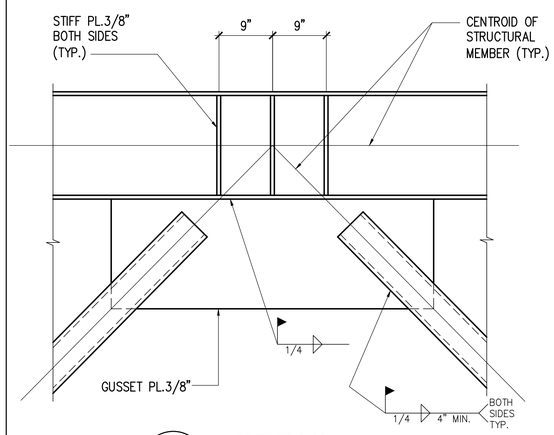

05 DETAIL
SCALE: NONE

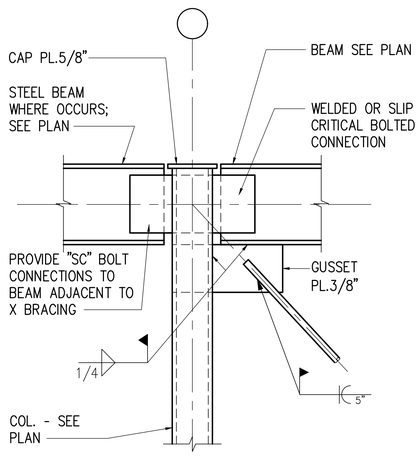

06 DETAIL
SCALE: NONE

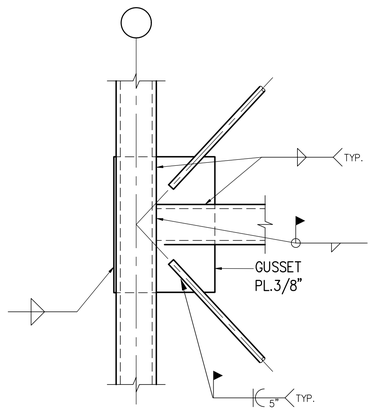

07 DETAIL
SCALE: NONE

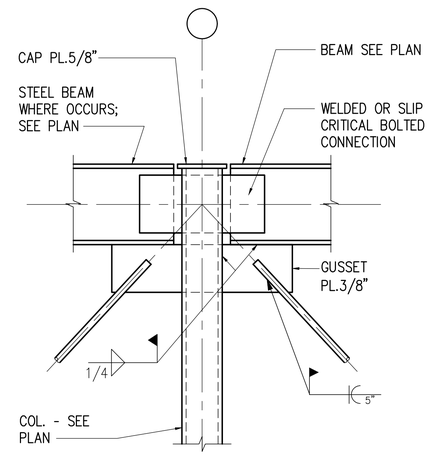

08 DETAIL
SCALE: NONE

REVISIONS

SHELL ONLY

THE SHOPS AT LUCAS

LUCAS, TEXAS 75002

2650 WEST LUCAS ROAD

10300 N Central Expressway
Suite 450 Dallas, Texas 75231
Telephone: 817-903-6663
dons@dfsarchitect.com

DONALD F. SOPRANZI
AIA, LEED AP
ARCHITECT

STATE OF TEXAS
HERMAN GUNAWAN
78886
LICENSED
PROFESSIONAL ENGINEER
6/1/2020

Signature
Sealed
Date 06/01/20
Scale AS SHOWN
Drawn MO, TO
Job 2020-006

S - 5.1