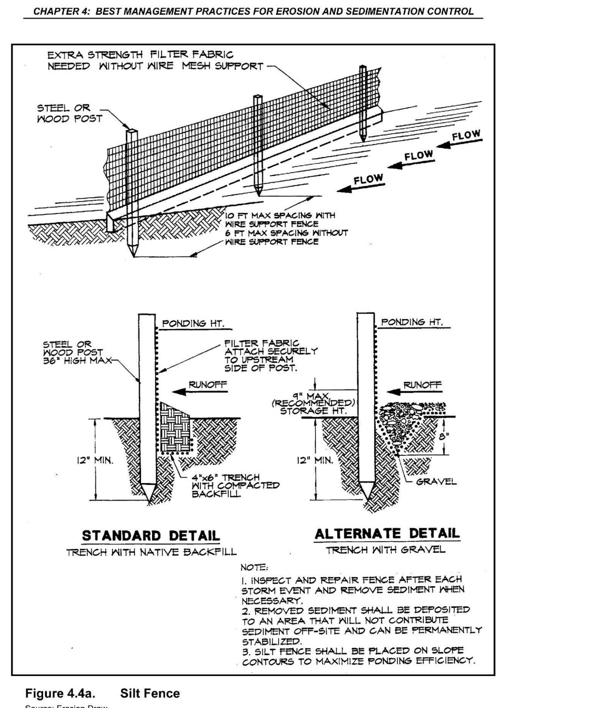

Figure 4.4a. Silt Fence
Source: Erosion Draw

2 (ASP-1.0) SILT FENCE DETAIL
SCALE: N.T.S.

3 (ASP-1.0) BIKE RACK DETAIL
SCALE: N.T.S.

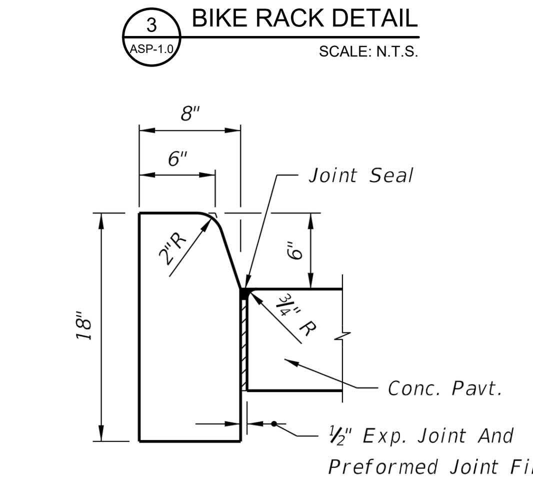

4 (ASP-1.0) FDOT CONCRETE CURB TYPE "D" DETAIL
SCALE: 1"=1'-0"

LEGAL DESCRIPTION:

LOTS 1, 2, 71, 72, 73, AND 74, SUNNY SHORES, ACCORDING TO THE PLAT THEREOF RECORDED IN PLAT BOOK 24, PAGE 15, OF THE PUBLIC RECORDS OF PINELLAS COUNTY, FLORIDA.

AND

LOT 3, TOGETHER WITH ALL LAND LYING BETWEEN THE SAID LOT 3 AND THE WATERS OF THE GULF OF MEXICO, SUNNY SHORES, ACCORDING TO PLAT THEREOF AS RECORDED IN PLAT BOOK 24. PAGE 15, OF THE PUBLIC RECORDS OF PINELLAS COUNTY, FLORIDA.

AND

LOTS 1, 2, 3, AND 4, MADEIRA SHORES, ACCORDING TO THE MAP OR PLAT THEREOF, AS RECORDED IN PLAT BOOK 22, PAGE 87, OF THE PUBLIC RECORDS OF PINELLAS COUNTY, FLORIDA.

LIGHTING LEGEND

- LED CANOPY LED FIXTURE WITH REQUIRED MOUNTING HARDWARE
- EXTERIOR DOWN LIGHT WALL SCONCE WITH REQUIRED MOUNTING HARDWARE
- BOLLARD LIGHT (LED)
- LIGHT POLE LED (SINGLE LAMP)
- LIGHT POLE LED (DOUBLE LAMP)

NOTES:

1. ALL LIGHTING TO BE PROPERLY "TURTLE" SHIELDED IN COMPLIANCE WITH LOCAL, STATE, AND FEDERAL STATUTES PER SECTION 110-506 - LIGHTING IN BEACH AREA.
2. ALL LIGHTS TO BE LED TECHNOLOGY.

SIGNAGE NOTES:

1. ALL SIGNAGE TO BE CONFORMED WITH THE CODE OF ORDINANCES OF MADEIRA BEACH, PART II, CHAPTER 102 - SIGNS, SEC. 102-1 THRU 102-96.

SITE DATA TABLE:

CATEGORY	ALLOWABLE	EXISTING (WEST LOT)	EXISTING (EAST LOT)	PROPOSED (WEST LOT)	PROPOSED (EAST LOT)	TOTAL PROPOSED (WEST LOT + EAST LOT)
ZONING	R-3 / C-3	R-3	C-3	PD	PD	PD
LAND USE DISTRICT	MEDIUM DENSITY MULTIFAMILY RESIDENTIAL / RETAIL COMMERCIAL	MEDIUM DENSITY MULTIFAMILY RESIDENTIAL	RETAIL COMMERCIAL	PLANNED DEVELOPMENT	PLANNED DEVELOPMENT	PLANNED DEVELOPMENT
SETBACKS	FRONT: 2'-0" REAR: 15'-0" & 35'-0" SIDE: 10'-0" SIDE: 10'-0"	EAST: 7'-0" WEST FROM CCCL: 22'-2" NORTH: 17.5' SOUTH: 8.9'	EAST: 7'-0" WEST: 5'-1" NORTH: 87.9' SOUTH: 1'-0"	FRONT (EAST): 25'-1" REAR FROM CCCL (WEST): 4'-1" SIDE (NORTH): 10'-2" SIDE (SOUTH): 5'-2"	EAST: 36'-9" WEST: 5'-0" NORTH: 10'-11" SOUTH: 12'-0"	- - - -
B.F.E.	-	AE-12, VE-13, VE-14	AE-11, AE-12	AE-12, VE-13, VE-14	AE-11, AE-12	VE-14+2'-0' OF FREEBOARD
FINISHED FLOOR ELEVATION	-	5.67', 5.68' & 5.76' NAVD	4.51' & 4.52' NAVD	17.0' NAVD	4.5' NAVD (GROUND FLOOR)	-
SITE AREA	49,470.00 sq. ft.	20,170.00 sq. ft. 0.46 acres	29,300.00 sq. ft. 0.67 acres	20,170.00 sq. ft. 0.46 acres	29,300.00 sq. ft. 0.67 acres	49,470.00 sq. ft. 1.14 acres
DENSITY	-	-	-	56 units @ 40 units / acre	0	56 units @ 40 units / acre
BUILDING FOOTPRINT/ COVERAGE	- -	9,261.69 sq. ft. 45.92%	5,076.46 sq. ft. 17.33%	13,403.36 sq. ft. 66.45%	0.00 sq. ft. 0.00%	13,403.36 sq. ft. 66.45%
BUILDING HEIGHT/ FLOORS	-	BUILDING #1 = 2-STORY (21' TO ROOF TOP) BUILDING #2 = 2-STORY (26' TO ROOF TOP) BUILDING #3 = 2-STORY (21' TO ROOF TOP)	BUILDING #1 = 2-STORY (31' TO ROOF TOP) BUILDING #2 = 1-STORY (14' TO ROOF TOP)	54'-0" ABOVE FREEBOARD TO ROOF DECK 63'-0" ABOVE GRADE TO ROOF DECK	-	88'-0" ABOVE FREEBOARD TO ROOF 76'-0" ABOVE FREEBOARD TO ROOF DECK
FLOOR AREA RATIO (FAR)	74,205.00 Max. 1.50 Max. 150.00% Max.	- - -	- - -	- - -	- - -	58,668.00 sq. ft. 1.19 118.59%
IMPERVIOUS SURFACE RATIO (ISR)	34,629.00 Max. 0.70 Max. 70.00% Max.	- - -	- - -	0.72 72.40% 14,602.51 sq. ft.	0.66 65.92% 19,314.53 sq. ft.	0.69 68.56% 33,917.04 sq. ft.
LANDSCAPE & GREEN SPACE	SECTION 46.11 LANDSCAPING SHALL BE IN ACCORDANCE WITH THE REQUIREMENTS OF DIVISION 22	- - -	- - -	0.30 29.72% 5,994.31 sq. ft.	0.34 34.08% 9,985.47 sq. ft.	0.32 32.30% 15,979.78 sq. ft.
VEHICULAR & PEDESTRIAN USE	-	-	-	14,175.69 sq. ft. 70.28%	19,314.53 sq. ft. 65.92%	33,490.22 sq. ft. 67.70%
PARKING SPACES (P.S.)	TEMPORARY LODGING = 1 PARKING SPACE PER UNIT **56 P.S. REQUIRED** BICYCLE CREDIT =1 PER 1 UP TO 3 1 HDCP PARKING SPACE REQUIRED PER 25 PARKING SPACES	16 PARKING SPACES	73 PARKING SPACES	11 PARKING SPACES (STANDARD P.S. 9'x18') 3 HDCP PARKING SPACES (STANDARD HDCP 17'x18') 6 BICYCLE PARKING SPACES (3 CREDITS) 4 MOTORCYCLE SPACES (STANDARD P.S. 5'x10')	56 PARKING SPACES (STANDARD P.S. 9'x18')	67 PARKING SPACES (STANDARD P.S. 9'x18') 3 HDCP PARKING SPACES (STANDARD HDCP 17'x18') **TOTAL P.S. 70 P.S.** 6 BICYCLE PARKING SPACES (3 CREDITS) 4 MOTORCYCLE SPACES (STANDARD P.S. 5'x10')

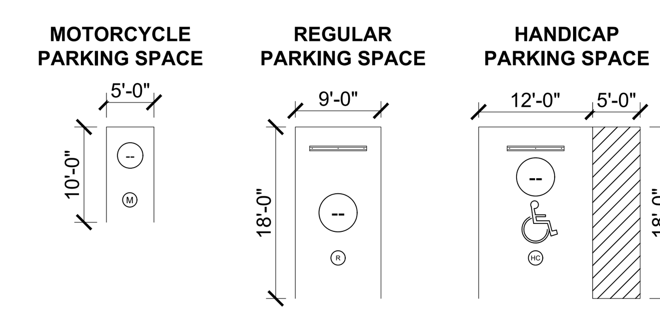

5 (ASP-1.0) TYPICAL PARKING SPACES
SCALE: 1/16" = 1'-0"

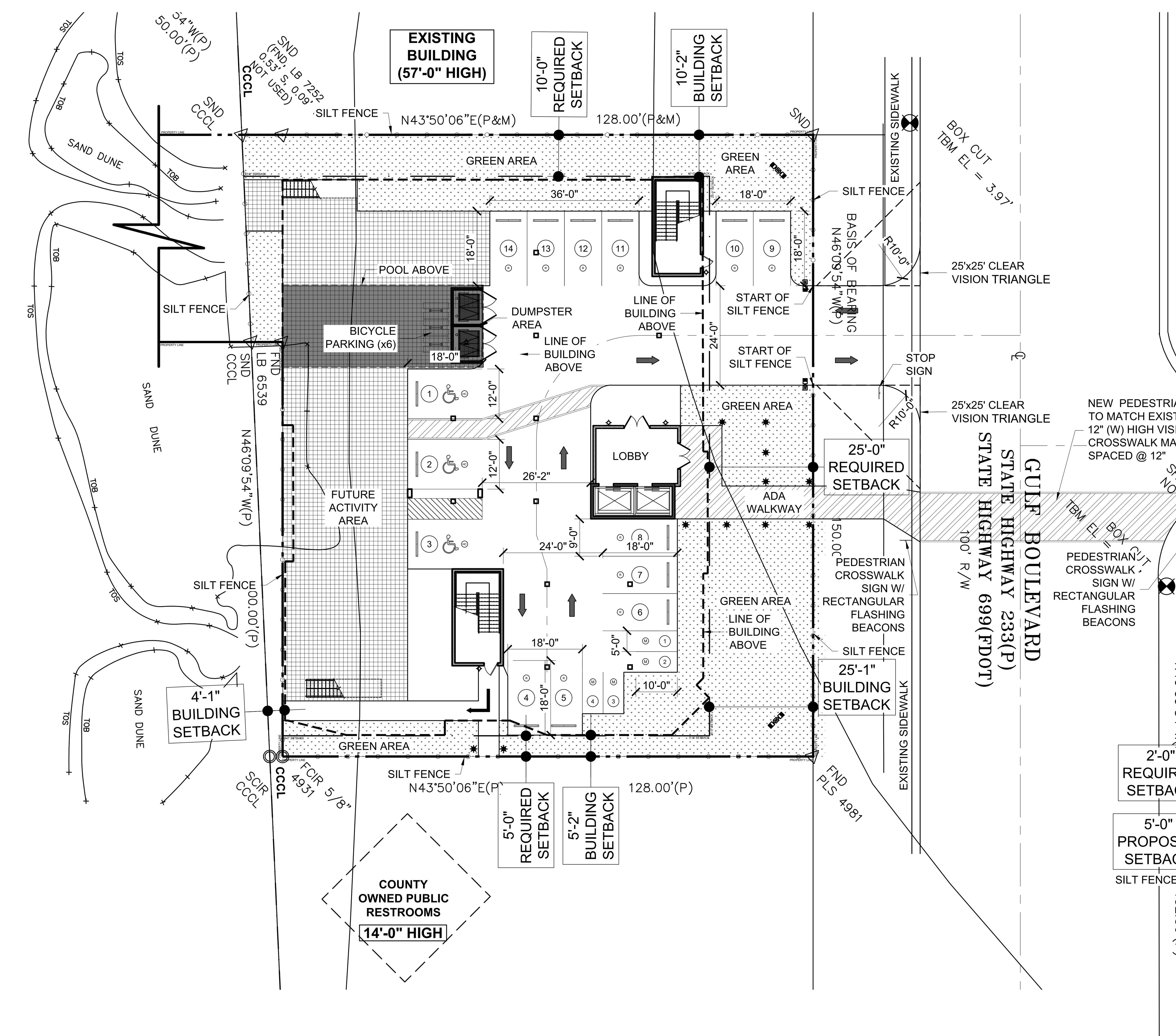

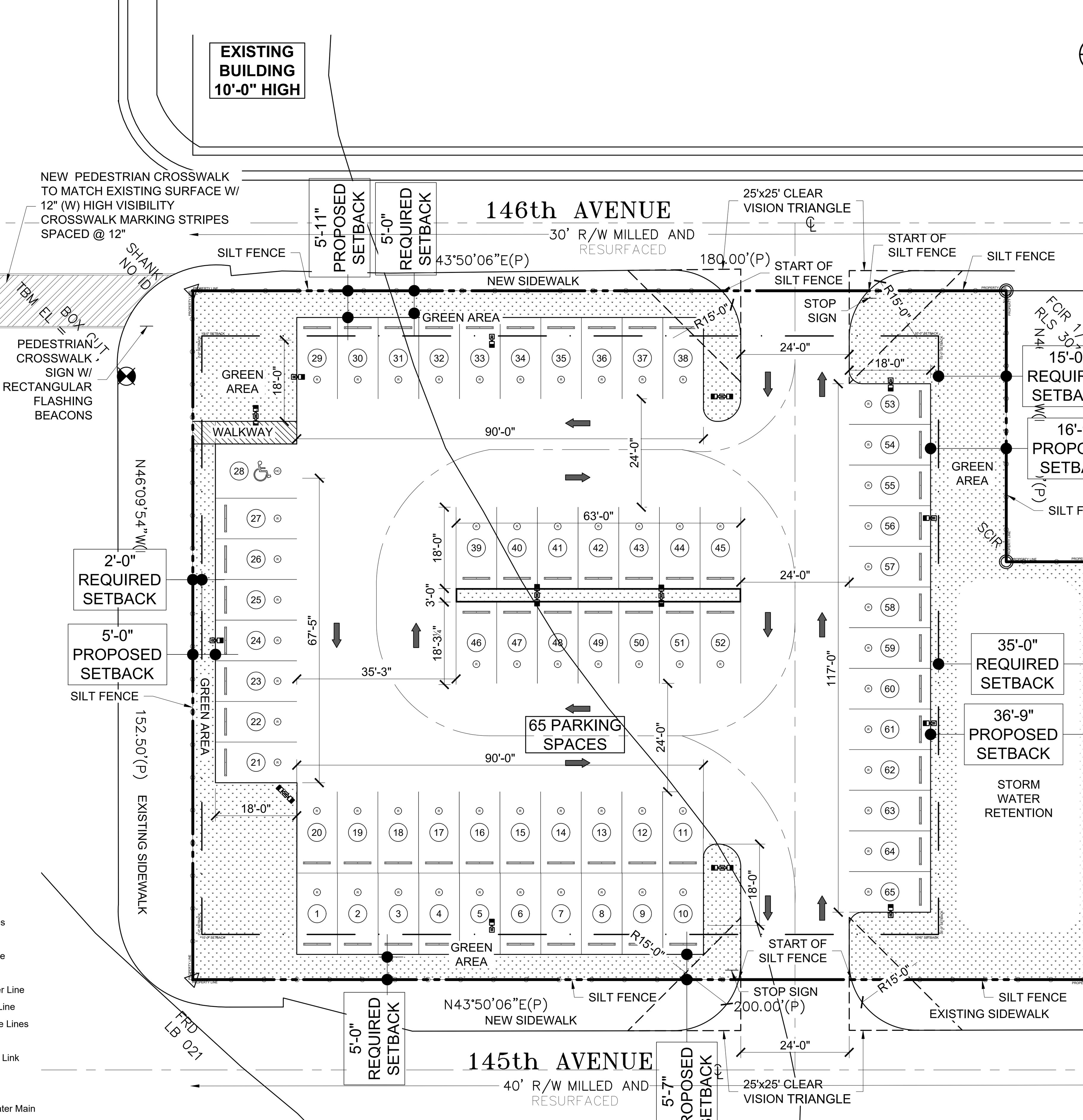

1 (ASP-1.0) ARCHITECTURAL SITE PLAN
SCALE: 1" = 20'-0"

NORTH

SCALE: 1" = 20'-0"
20 10 0 20
GRAPHIC SCALE (IN FEET)

LEGEND

(C)	= Calculated Data	F	= FOUND	PLS	= Professional Land Surveyor		
(D)	= Data per Description	FCIR	= FOUND IRON ROD & CAP	POB	= Point of Beginning		
(F)	= Field Determined	FCM	= FOUND CONCRETE MONUMENT	POC	= Point of Commencement		
(M)	= Measured Data	FDOT	= FLORIDA DEPARTMENT OF TRANSPORTATION	PRC	= Point of Reverse Curvature		
(P)	= Data per Plat	FFE	= FINISHED FLOOR ELEVATION	PRM	= Permanent Reference Monument		
+ / -	= Plus or Minus	FIP	= FOUND IRON PIPE	R	= Radius		
A/C	= Air Conditioner	FIR	= FOUND IRON ROD NO CAP	RGE	= Range		
BW/F	= Barbwire Fence	FMN	= FOUND MAG NAIL	R/W	= Right-of-way		
BFE	= Base Flood Elevation	FND	= FOUND NAIL & DISK	RCP	= Reinforced Concrete Pipe		
BFP	= Backflow Preventor	FPP	= FOUND PINCHED PIPE	SCM	= Set Concrete Monument PLS #2865		
CB	= Chord Bearing	FRD	= FOUND RIVET & DISK	SCIR	= Set Iron Rod & Cap 5/8" PLS #2865		
CH	= Chord	G.I.	= GRATE INLET	SMH	= Sanitary Manhole		
C.A.B.	= Condominium Plat Book	GV	= GATE VALVE	SMN	= Set Mag Nail		
C/C	= Covered Concrete	HYD	= FIRE HYDRANT	SND	= Set Nail & Disc PLS #2865		
C/S	= Concrete Slab	I.E.	= INVERT ELEVATION	TBM	= Temporary Benchmark		
C/SW	= Concrete Sidewalk	LB	= CORPORATE CERTIFICATE NUMBER	TOB	= Top of Bank		
CCCL	= Coastal Construction Control Line	LP	= LIGHT POLE	TOS	= Toe of Slope		
CL	= Centerline	LFE	= LOWEST FLOOR ELEVATION	TWP	= Township		
CLF	= Chainlink Fence	M.O.L.	= MORE OR LESS	TYP	= Typical		
COV.	= Covered	MES	= MITERED END SECTION	UB	= Utility Box		
CLP	= Concrete Light Pole	N&D	= NAIL & DISK	UP	= Utility Pole		
CMP	= Corrugated Metal Pipe	NFNS	= NOT FOUND AND NOT SET	V/F	= Vinyl Fence		
CONC.	= Concrete	OCS	= OUTFALL CONTROL STRUCTURE	W/F	= Wood Fence		
Δ	= Delta Angle	OHW	= OVERHEAD WIRE	WM	= Water Meter		
D.B.	= Deed Book	O.R.	= OFFICIAL RECORDS BOOK	W.O.	= Work Order		
D/W	= Driveway	P.B.	= PLAT BOOK	WV	= Water Valve		
DMH	= Drainage Manhole	PCP	= PERMANENT CONTROL POINT				
E/P	= Edge of Pavement	PG(S)	= PAGE(S)				
EL	= Elevation						
EOW	= Edge of Water						

SYMBOL LEGEND

- = Backflow Preventor
- = Cable Box
- = Centerline
- = Cleanout
- = Decorative Light
- = Drainage Manhole
- = Fire Hydrant
- = Grease Trap
- = Guy Anchor
- = Handicap
- = Lightpole
- = Mailbox
- = Power Box
- = Sanitary Manhole
- = Sign
- = Spot Elevation
- = Telephone Box
- = Utility Pole
- = Water Meter
- = Water Valve
- = Well

TREE LEGEND

- OAK
- PALM
- NORFOLK PINE
- BANYON

NOTE:
ALL SIZES ARE IN INCHES

LINE LEGEND

- = Boundary Lines
- W — W = Water Line
- = Telephone Line
- GAS — GAS = Gas Line
- = Sanitary Sewer Line
- ST — ST = Storm Sewer Line
- OHW — OHW = Overhead Wire Lines
- = Fence - Wire
- = Fence - Chain Link
- = Fence - Vinyl
- = Fence - Wood
- REC — REC = Reclaimed Water Main

PROFESSIONAL STATEMENT: TO THE BEST OF THIS ARCHITECT'S KNOWLEDGE, ENCLOSED PLANS AND SPECIFICATIONS COMPLY WITH THE APPLICABLE MINIMUM BUILDING CODES AND THE APPLICABLE MINIMUM FIRE SAFETY STANDARDS AS DETERMINED IN ACCORDANCE WITH CHAPTERS 553 AND 633, LAWS OF FLORIDA.

JOHN A. BODZIAK & ASSOC. INC., HEREBY RESERVES ITS COMMON LAW COPYRIGHTS AND OTHER PROPERTY RIGHTS IN THESE PLANS, IDEAS AND DESIGN. THESE IDEAS, DESIGNS AND PLANS ARE NOT TO BE REPRODUCED, CHANGED OR COPIED IN ANY FORM OR MATTER WHATSOEVER, NOR ARE THEY TO BE ASSIGNED TO ANY THIRD PARTY WITHOUT FIRST OBTAINING THE EXPRESS WRITTEN PERMISSION AND CONSENT AND APPROPRIATE COMPENSATION TO JOHN A. BODZIAK & ASSOC. INC. WRITTEN DIMENSIONS SHALL HAVE PRECEDENCE OVER SCALE DIMENSIONS. CONTRACTOR SHALL VERIFY AND BE RESPONSIBLE FOR DIMENSIONS AND CONDITIONS OF THE JOB AND JOHN A. BODZIAK & ASSOC. INC. BE NOTIFIED IN WRITING OF ANY VARIATION FROM THE DIMENSIONS, CONDITIONS AND SPECIFICATIONS APPEARING ON THESE PLANS.

REVISIONS

NO.	DATE	DESCRIPTION
1	11/18/2020	ADJUSTMENTS PER CITY COMMENTS
	04/5/2021	REVISIONS TO SITE DATA TABLE

CLIENT

PROJECT
SCHOONER RESORT
14500 - 14550 GULF BOULEVARD
MADEIRA BEACH, FLORIDA

ARCHITECTURAL SITE PLAN

SEAL

CONTRACTOR SHALL CHECK AND VERIFY ALL DIMENSIONS AND COORDINATE ALL FIELD CONDITIONS. ALL DISCREPANCIES AND CONFLICTS SHALL BE REPORTED TO THE ARCHITECT IN WRITING PRIOR TO PROCEEDING OR CONTINUING WITH CONSTRUCTION. UNREPORTED DISCREPANCIES AND CONFLICTS SHALL REMAIN THE RESPONSIBILITY OF THE CONTRACTOR.

JOHN A. BODZIAK
ARCHITECT AIA, PA
ARCHITECTURE, DESIGN, AND CONSTRUCTION MANAGEMENT
FLORIDA REGISTRATION NO. AR0005065
EMAIL: JACK@JABODZIAK.COM
743 49th STREET N. SAINT PETERSBURG, FLORIDA 33710
TEL: (727) 327-1966 FAX: (727) 826-0968

DRAWN BY	TT-AT-JB-CS
UPDATED ON	May. 24, 21
DATE	OCT - 2018
JAB PROJECT #	2018-029
SHEET #	ASP-1.0