BUILDING AND SAFETY
909.625.9477

CONVENTIONAL WOOD-FRAMED CONSTRUCTION SHEET

SUMMARY OF 2010 CBC SEC. 2308 AND CITY OF MONTCLAIR AMENDMENTS AND ORDINANCES. FOR USE WITH SINGLE-STORY CONSTRUCTION ONLY.
DEAD LOAD SHALL NOT EXCEED 15 PSF FOR COMBINED ROOF AND CEILING, OR EXTERIOR WALLS, OR FLOORS AND PARTITIONS. LIVE LOAD SHALL NOT EXCEED 40 PSF.
THIS SHEET IS FOR REFERENCE ONLY AND IS NOT A SUBSTITUE FOR ACCURATE DRAWINGS PREPARED FOR EACH PROPOSED CONSTRUCTION PROJECT.

City of Montclair
5111 Benito St.
Montclair, CA 91763

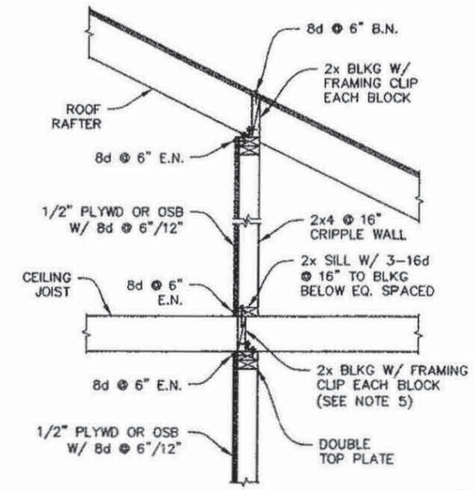

INTERIOR BRACED WALL 1

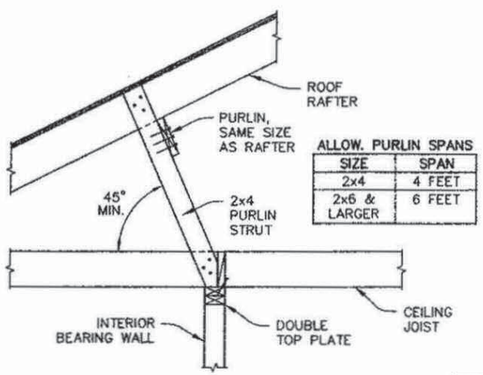

ALLOW. PURLIN SPANS

SIZE	SPAN
2x4	4 FEET
2x6 & LARGER	6 FEET

CBC 2308.10.5 PURLIN BRACING 2

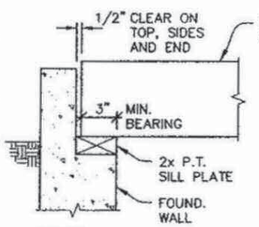

DF#1 FLOOR GIRDERS

SIZE	ALLOWABLE SPAN*	
	NON-BRG PARTITIONS	NO PARTITIONS
4x6	5'-3"	5'-8"
4x8	6'-10"	7'-4"

*MAXIMUM TRIBUTARY WIDTH = 8'-0"

NOTES:
(1) FLOOR GIRDERS SHALL BE SPACED AT 8'-0" O.C. MAX.
(2) SILL PLATE SHALL BE PRESERVATIVE-TREATED WHEN LESS THAN 8" FROM SOIL.

CBC 2304.11.2.5
CBC 2308.7 FLOOR GIRDERS 3

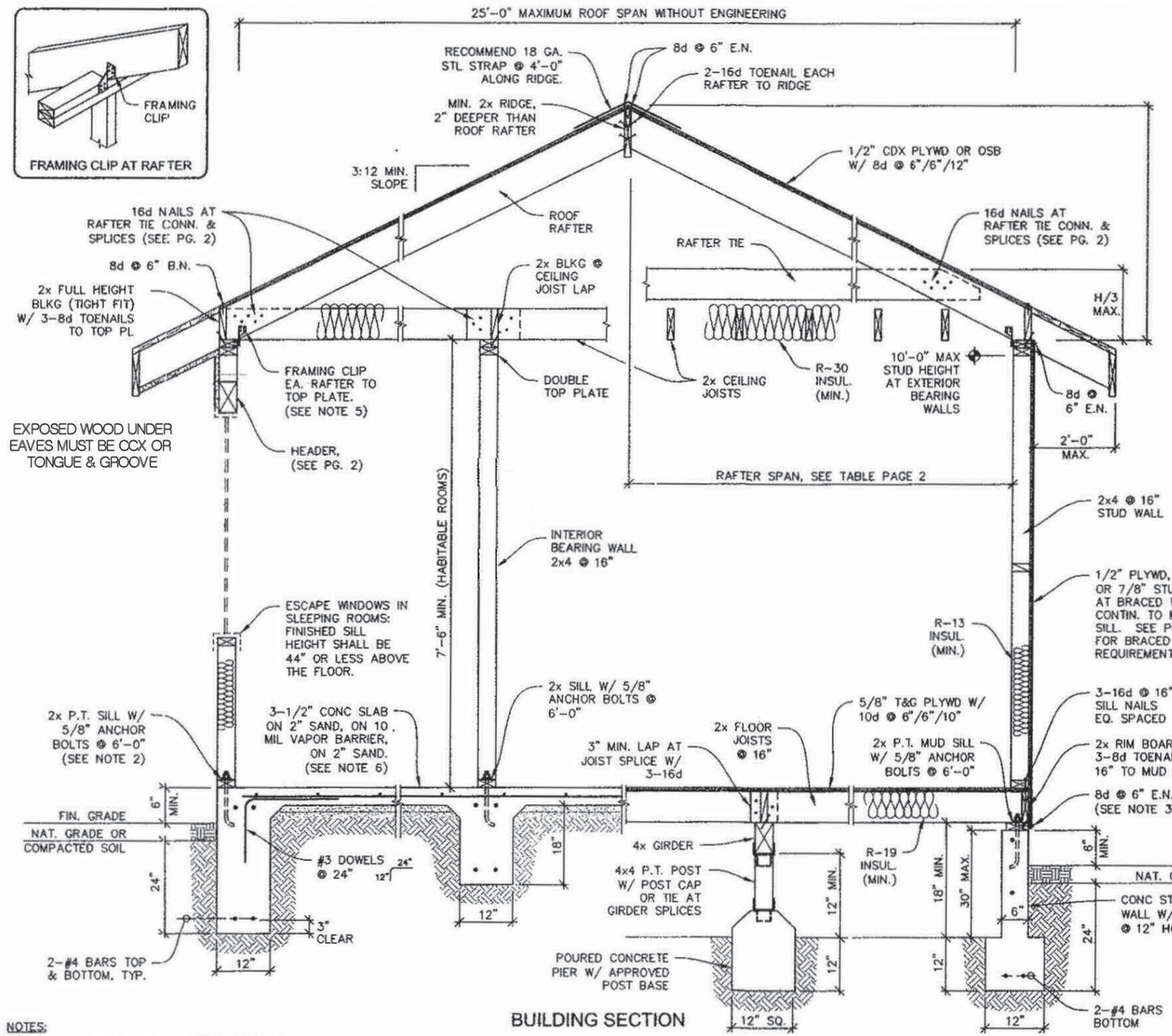

BUILDING SECTION

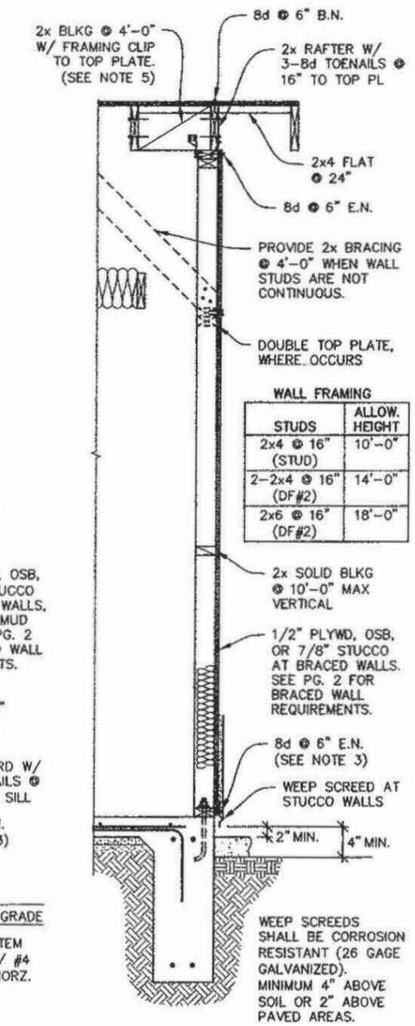

WALL FRAMING

STUDS	ALLOW. HEIGHT
2x4 @ 16" (STUD)	10'-0"
2-2x4 @ 16" (DF#2)	14'-0"
2x6 @ 16" (DF#2)	18'-0"

GABLE END WALL

NOTES:
(1) MINIMUM CONCRETE STRENGTH: 2500 psi
(2) ANCHOR BOLTS SHALL BE EMBEDDED AT LEAST 7" INTO CONCRETE. FOR TWO-POUR FOUNDATIONS, THE REQUIRED EMBEDMENT SHALL BE PROVIDED IN THE FIRST POUR. ANCHOR BOLTS SHALL BE LOCATED NOT MORE THAN 12", OR LESS THAN 4-1/2" FROM SILL PLATE ENDS, CORNERS, AND SPLICES. ANCHOR BOLTS SHALL BE INSTALLED WITH 1/4" x 3" SQUARE PLATE WASHERS.
(3) FASTENERS FOR PRESERVATIVE TREATED WOOD SHALL BE OF HOT DIPPED ZINC-COATED GALVANIZED STEEL, STAINLESS STEEL, SILICON BRONZE OR COPPER.
(4) FOUNDATIONS SHOWN ABOVE ASSUME EXPANSIVE SOILS ARE PRESENT AT THE SITE. FOUNDATION REQUIREMENTS MAY BE REDUCED WHEN JUSTIFIED BY A GEOTECHNICAL REPORT OR APPROVED BY THE BUILDING OFFICIAL.
(5) FRAMING CLIPS SHALL BE 18 GAGE STEEL WITH FOUR 8d NAILS PER LEG (EIGHT 8d NAILS PER CLIP). FRAMING CLIPS SHALL BE ICC APPROVED AND INSTALLED PER MANUFACTURER'S RECOMMENDATIONS.
(6) SLAB ON GRADE SHALL BE REINFORCED WITH 6x6/6x6 WIRE MESH OR #4 BARS @ 24" EACH WAY. REINFORCING SHALL BE LOCATED AT SLAB MID-HEIGHT.