Counter Complete

August 15, 2024

City of Port Orchard
Community Development

MCCORMICK WOODS DIVISION 4 NORTH PARK

A PORTION OF SECTION 4 & 5, TOWNSHIP 23N, RANGE 01 E, W.M., CITY OF PORT ORCHARD, KITSAP COUNTY, WASHINGTON

COVER SHEET

GRAPHIC SCALE

0 80 160

1 INCH = 80 FEET (22"x34")
1 INCH = 160 FEET (11"x17")

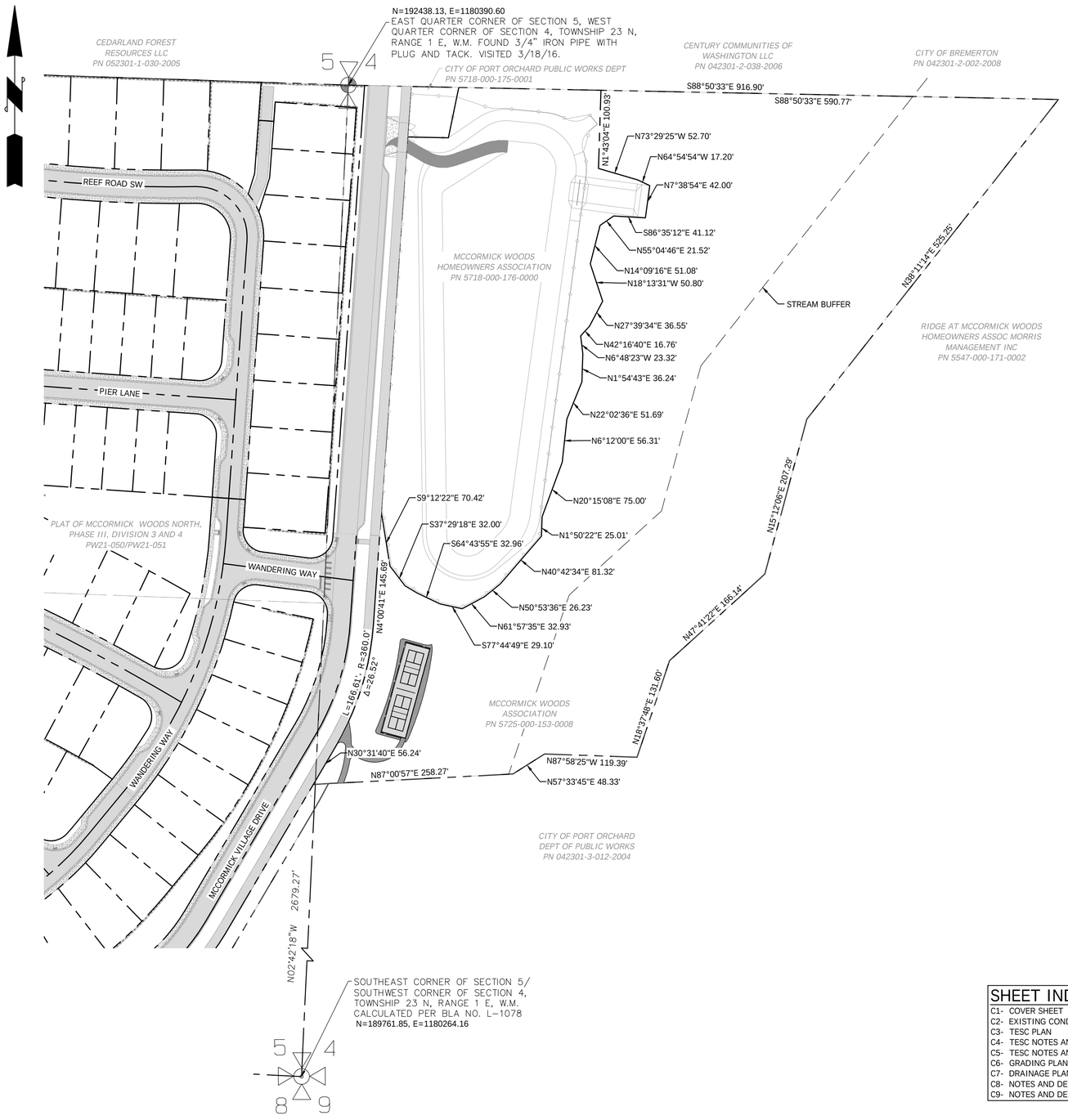

SITE DATA

PARCEL NUMBER:	5725-000-153-0008
OWNER:	MCCORMICK WOODS ASSOCIATION
PARCEL AREA:	7.95 ACRES
ZONING:	R3 - RESIDENTIAL 3

APPLICANT

GREG KRABBE
McCORMICK COMMUNITIES LLC
805 KIRKLAND AVE, SUITE 200
KIRKLAND, WA 98033

GEOTECHNICAL ENGINEER

RILEY GROUP
17522 BOTHELL WAY NE,
BOTHELL, WA 98011
(425) 415-0551

ENGINEER

JEREMY HAUG, PE
CONTOUR ENGINEERING LLC
P.O. BOX 949 GIG HARBOR, WA 98335
(253) 857-5454

SURVEYOR

STEVE WOODS, PLS
CONTOUR ENGINEERING LLC
P.O. BOX 949 GIG HARBOR, WA 98335
(253) 857-5454

WETLAND BIOLOGIST

SOUNDVIEW CONSULTANTS
2907 HARBORVIEW DR., SUITE D
GIG HARBOR, WA 98335
(253) 514-8952

LANDSCAPE ARCHITECT

LYON LANDSCAPE ARCHITECTS
2111 SOUTH C STREET
TACOMA, WA 98402
(253) 678-4173

BASIS OF BEARING

GRID NORTH. BASED UPON GLOBAL POSITIONING SYSTEM (GPS) LAMBERT GRID WASHINGTON STATE SOUTH ZONE COORDINATES. THE NORTH AMERICAN DATUM OF 1983/2011 (NAD 83/2011 EPOCH 2010.00) GRID COORDINATES WERE FOUND TO BE 189899.60 / 1177628.83 AT A BRASS DISK IN CONCRETE, INCASED AT THE NORTH QUARTER CORNER OF SECTION 8, TOWNSHIP 21 NORTH, RANGE 1 EAST, W.M. THE INVERSE OF BOTH THE SEA LEVEL CORRECTION FACTOR OF 0.9999808534 AND THE GRID SCALE FACTOR OF 0.9999990407 WAS APPLIED TO THE GRID COORDINATES FOR SHOWN GROUND DISTANCES.

HORIZONTAL DATUM

NAD 1983
STATE PLANE WASHINGTON NORTH FIPS 4601

VERTICAL DATUM

HELD MCCORMICK ELEVATION OF 395.68, NGVD29, ON A 3" BRASS DISK MONUMENT, IN CASE, AT THE INSTERSECTION OF ST. ANDREWS DRIVE AND RUTHERFORD CIRCLE SW.(ADD 3.41' TO CONVERT TO NAVD88 DATUM.

SURVEYOR'S NOTES

1. THE MONUMENT CONTROL SHOWN FOR THIS SITE WAS ACCOMPLISHED BY FIELD TRAVERSE UTILIZING A THREE (3) SECOND THEODOLITE WITH INTEGRAL ELECTRONIC DISTANCE MEASURING METER (GEODIMETER 610). LINEAR AND ANGULAR CLOSURE OF THE TRAVERSES MEET THE STANDARDS OF WAC 332-130-090.
2. UTILITIES OTHER THAN THOSE SHOWN MAY EXIST ON THE SITE. ONLY THOSE WHICH ARE VISIBLE OR HAVING VISIBLE EVIDENCE OF THEIR INSTALLATION ARE SHOWN HEREON.
3. THIS SURVEY REPRESENTS PHYSICAL IMPROVEMENT CONDITIONS AS THEY EXISTED NOVEMBER 1, 2022, THE DATE OF THIS FIELD SURVEY.
4. THIS IS NOT A BOUNDARY SURVEY. THE BOUNDARY LINES SHOWN ARE FOR REFERENCE ONLY.
5. OFFSET DIMENSIONS SHOWN HEREON ARE MEASURED PERPENDICULAR TO PROPERTY LINES.
6. IT IS NOT THE INTENT OF THIS SURVEY TO SHOW EASEMENTS OR RESERATIONS WHICH MAY EFFECT THIS SITE.
7. THE PURPOSE OF THIS SURVEY IS TO SUPPORT FUTURE POTENTIAL DEVELOPMENT.
8. ELEVATION CONTOURS SHOWN HEREON ARE DERIVED FROM FIELD MEASUREMENTS AND MEET OR EXCEED THE MINIMUM ACCURACY OF THE NATIONAL MAPPING STANDARD. BEING ONE-HALF THE CONTOUR INTERVAL.

SHEET INDEX

C1- COVER SHEET
C2- EXISTING CONDITIONS
C3- TESC PLAN
C4- TESC NOTES AND DETAILS
C5- TESC NOTES AND DETAILS
C6- GRADING PLAN
C7- DRAINAGE PLAN
C8- NOTES AND DETAILS
C9- NOTES AND DETAILS

VERIFICATION NOTE

ALL EXISTING UTILITIES IN THE CONSTRUCTION AREA SHALL BE IDENTIFIED AND VERIFIED FOR DEPTH AND LOCATION PRIOR TO ANY CONSTRUCTION ACTIVITIES SO TO IDENTIFY ANY POTENTIAL CONFLICTS WITH PROPOSED CONSTRUCTION. CONTACT PROJECT ENGINEER IMMEDIATELY IF ANY CONFLICTS ARE IDENTIFIED.

PRIOR TO ANY CONSTRUCTION ACTIVITIES, VERIFY EXISTING TOPOGRAPHY IS CONSISTENT WITH WHAT IS SHOWN ON PLANS AND IF THERE ARE ANY POTENTIAL CONFLICTS WITH PROPOSED CONSTRUCTION ACTIVITIES. CONTACT PROJECT ENGINEER IMMEDIATELY IF ANY CONFLICTS ARE IDENTIFIED.

VICINITY MAP

NOT TO SCALE

LEGEND

SURVEY		PROPOSED
100	CONTOURS	100
	PROPERTY LINE/RIGHT-OF-WAY	
	RIGHT-OF-WAY DEDICATION	
	RIGHT-OF-WAY CENTERLINE	
	EASEMENT	
	BUILDING SETBACK	
SD	STORM DRAIN LINE	SD
SS	SANITARY SEWER LINE	SS
RD	ROOF DRAIN LINE	RD
FM	SANITARY SEWER FORCE MAIN LINE	FM
UT	COMMON UTILITY TRENCH	UT
OHP	OVERHEAD POWER LINE	OHP
P	UNDERGROUND POWER LINE	P
G	GAS LINE	G
W	WATER LINE	W
	ROCKERY RETAINING WALL	
	CONCRETE RETAINING WALL	
	TYPE 2 CATCHBASIN	
	TYPE 1/TYPE 1L CATCHBASIN	
	STORM DRAIN CLEANOUT (SDCO)	
	SANITARY SEWER MANHOLE	
	SANITARY SEWER CLEANOUT (SSCO)	
	HYDRANT	
	WATER VALVE	
	WATER METER	
	FIRE STAND PIPE (FSP)	
	FIRE DEPARTMENT CONNECTION (FDC)	
	PRESSURE RELEASE VALVE (PRV)	
	GAS MARKING POST	
	GAS METER (GM)	
	GAS VALVE (GV)	
	MONUMENT	
	POWER POLE (PP)	
	GUY WIRE (GW)	
	WATER MARKING POST (WMP)	
	LIGHT STANDARD/YARD LIGHT (LS/YL)	
	POWER MANHOLE (PMH)	
PV	POWER VAULT	
TP	TRANSFORMER PAD	
	TELEPHONE JUNCTION BOX	
	CABLE JUNCTION BOX (CJB)	
	SIGNAL BOX (SB)	
WS	WHEEL STOP	
	SIGN	
	BOLLARD	
	ASPHALT	
	CONCRETE	
	GRAVEL	

CALL 811 AT LEAST 48 HOURS BEFORE YOU DIG

REVISION	DESCRIPTION	DATE	BY

CONTOUR ENGINEERING • LLC
CIVIL ENGINEERS ~ SURVEYORS ~ LAND PLANNERS
Phone: 253-857-5454 ~ Fax: 253-509-0044 ~ info@contourpllc.com
Mailing Address: P.O. Box 949, Gig Harbor, WA 98335
Physical Address: 4706 97th Street NW, Suite 100, Gig Harbor, WA 98332

JEREMY F. HAUG — STATE OF WASHINGTON — 40504 — REGISTERED PROFESSIONAL ENGINEER

29 July 2024

SHEET TITLE: COVER SHEET

MCCORMICK WOODS DIVISION 4 NORTH PARK

CLIENT: McCORMICK COMMUNITIES, LLC
805 KIRKLAND AVE, SUITE 200
KIRKLAND, WA 98033

CONTACT: GREG KRABBE

PHONE: (425) 750-8400

DESIGNER: M. GOULARTE
ENGINEER: J. HAUG
DRAWN: L. BESLER
S 4&5 T 23 N R 01E WM
DATE: 2024.07.29
REVISED:

PROJECT: 24-118
DWG NAME: 24-118-C

SHEET	REV.
C1	△

1 OF 9

PW24-032 & PW24-033

MCCORMICK WOODS DIVISION 4 NORTH PARK

A PORTION OF SECTION 4 & 5, TOWNSHIP 23N, RANGE 01 E, W.M.,
CITY OF PORT ORCHARD, KITSAP COUNTY, WASHINGTON
EXISTING CONDITIONS

GRAPHIC SCALE

0 30 60

1 INCH = 30 FEET (22"x34")
1 INCH = 60 FEET (11"x17")

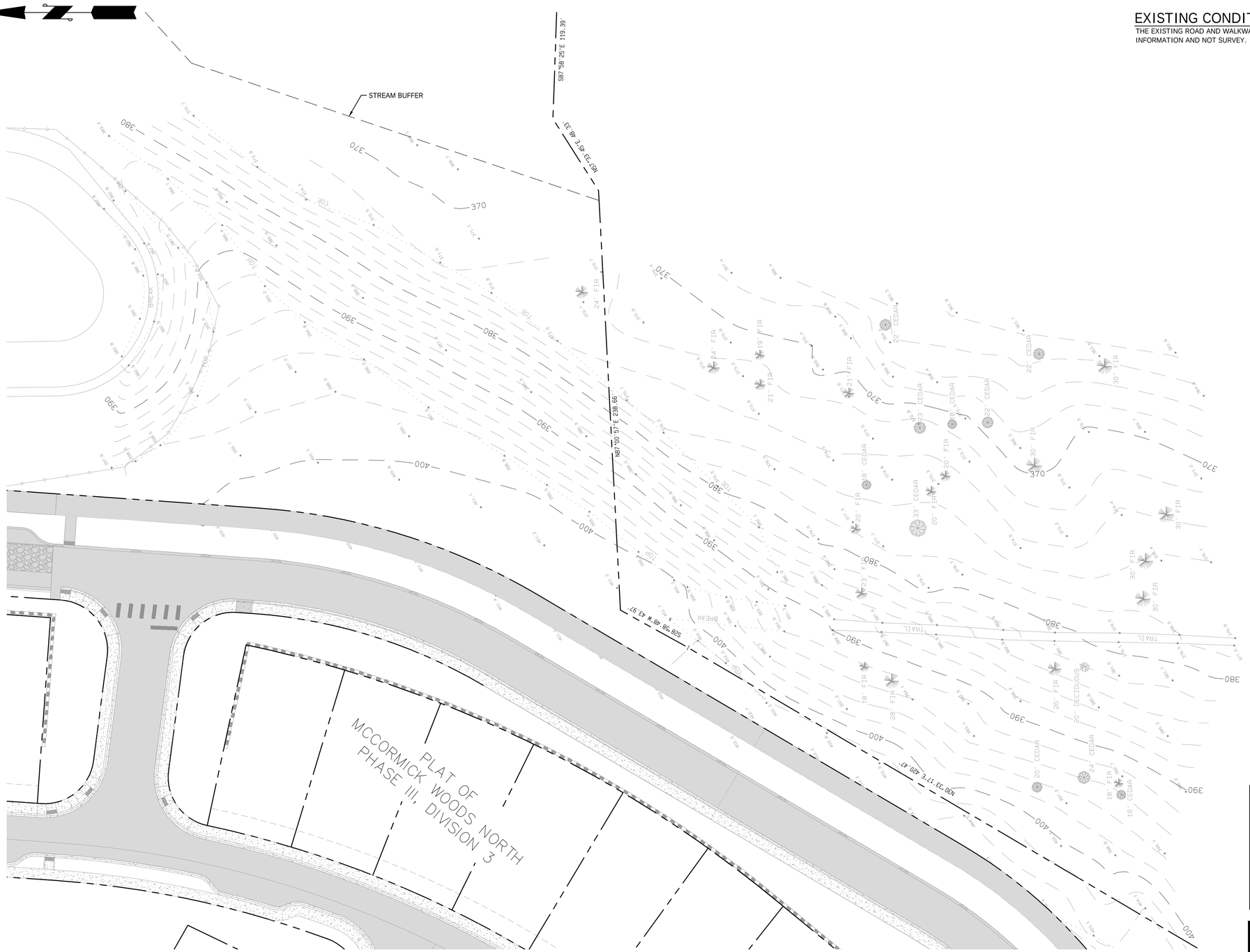

EXISTING CONDITIONS NOTE

THE EXISTING ROAD AND WALKWAY SHOWN IS BASED ON PROPOSED INFORMATION AND NOT SURVEY.

VERIFICATION NOTE

ALL EXISTING UTILITIES IN THE CONSTRUCTION AREA SHALL BE IDENTIFIED AND VERIFIED FOR DEPTH AND LOCATION PRIOR TO ANY CONSTRUCTION ACTIVITIES SO TO IDENTIFY ANY POTENTIAL CONFLICTS WITH PROPOSED CONSTRUCTION. CONTACT PROJECT ENGINEER IMMEDIATELY IF ANY CONFLICTS ARE IDENTIFIED.

PRIOR TO ANY CONSTRUCTION ACTIVITIES, VERIFY EXISTING TOPOGRAPHY IS CONSISTENT WITH WHAT IS SHOWN ON PLANS AND IF THERE ARE ANY POTENTIAL CONFLICTS WITH PROPOSED CONSTRUCTION ACTIVITIES. CONTACT PROJECT ENGINEER IMMEDIATELY IF ANY CONFLICTS ARE IDENTIFIED.

CALL 811 AT LEAST 48 HOURS BEFORE YOU DIG

REVISION	DESCRIPTION	DATE	BY

CONTOUR ENGINEERING • LLC
CIVIL ENGINEERS ~ SURVEYORS ~ LAND PLANNERS
Phone: 253-857-5454 ~ Fax: 253-509-0044 ~ info@contourpllc.com
Mailing Address: P.O. Box 949, Gig Harbor, WA 98335
Physical Address: 4706 97th Street NW, Suite 100, Gig Harbor, WA 98332

JEREMY F. HAUG — STATE OF WASHINGTON — 40504 — REGISTERED PROFESSIONAL ENGINEER

29 July 2024

SHEET TITLE: EXISTING CONDITIONS

MCCORMICK WOODS DIVISION 4 NORTH PARK

CLIENT: McCORMICK COMMUNITIES, LLC
805 KIRKLAND AVE, SUITE 200
KIRKLAND, WA 98033

CONTACT: GREG KRABBE

PHONE: (425) 750-8400

DESIGNER: M. GOULARTE
ENGINEER: J. HAUG
DRAWN: L. BESLER
S4&5 T23 N R01E WM
DATE: 2024.07.29
REVISED:

PROJECT: 24-118
DWG NAME: 24-118-C

SHEET	REV.
C2	△

MCCORMICK WOODS DIVISION 4 NORTH PARK

A PORTION OF SECTION 4 & 5, TOWNSHIP 23N, RANGE 01 E, W.M., CITY OF PORT ORCHARD, KITSAP COUNTY, WASHINGTON

TESC PLAN

GRAPHIC SCALE

0 20 40

1 INCH = 20 FEET (22"x34")

1 INCH = 40 FEET (11"x17")

TESC LEGEND

	PP	PRESERVE AND PROTECT AS NOTED
—— x ——	FF	FILTER FABRIC FENCE (1/C5)
	IP	INLET PROTECTION (2/C5)
— — —	CL	CLEARING LIMITS (0.57 ACRES)
	CE	CONSTRUCTION ENTRANCE (3/C5)
	VS	BMP C234 VEGETATED STRIP PER 2019 WESTERN WASHINGTON STORMWATER DESIGN MANUAL.

CONSTRUCTION SEQUENCE

1. CONDUCT A PRE-CONSTRUCTION MEETING WITH THE PUBLIC WORKS DEPARTMENT.
2. POST "NOTICE OF CONSTRUCTION ACTIVITY"SIGN WITH NAME AND PHONE NUMBER OF THE CESCL.
3. FLAG OR FENCE CLEARING LIMITS AND SIGNIFICANT TREES.
4. INSTALL CATCH BASIN PROTECTION, IF REQUIRED.
5. GRADE AND INSTALL CONSTRUCTION ENTRANCE(S).
6. INSTALL PERIMETER PROTECTION (SILT FENCE, BRUSH BARRIER, ETC.)
7. CONSTRUCT SURFACE WATER CONTROLS (INTERCEPTOR DITCHES, PIPE SLOPE DRAINS, ETC.) SIMULTANEOUSLY WITH CLEARING AND GRADING FOR PROJECT DEVELOPMENT.
8. MAINTAIN EROSION CONTROL MEASURES IN ACCORDANCE WITH THE CITY OF PORT ORCHARD STANDARDS AND MANUFACTURER'S RECOMMENDATIONS.
9. RELOCATE SURFACE WATER CONTROLS AND EROSION CONTROL MEASURES, OR INSTALL NEW MEASURES TO ENSURE THAT AS SITE CONDITIONS CHANGE THE EROSION AND SEDIMENT CONTROL IS ALWAYS IN ACCORDANCE WITH THE CITY OF PORT ORCHARD EROSION AND SEDIMENT CONTROL STANDARDS.
10. COVER ALL AREAS THAT WILL BE IDLE FOR MORE THAN SEVEN DAYS DURING THE DRY SEASON OR TWO DAYS DURING THE WET SEASON WITH STRAW, WOOD FIBER MULCH, COMPOST, PLASTIC SHEETING, OR EQUIVALENT.
11. STABILIZE ALL AREAS THAT REACH FINAL GRADE WITHIN SEVEN DAYS.
12. SEED OR SOD ANY AREAS TO REMAIN IDLE UNTIL SEED OR SOD IS ESTABLISHED.
13. UPON COMPLETION OF THE PROJECT, ALL DISTURBED AREAS MUST BE STABILIZED AND BEST MANAGEMENT PRACTICES REMOVED, IF APPROPRIATE.

VERIFICATION NOTE

ALL EXISTING UTILITIES IN THE CONSTRUCTION AREA SHALL BE IDENTIFIED AND VERIFIED FOR DEPTH AND LOCATION PRIOR TO ANY CONSTRUCTION ACTIVITIES SO TO IDENTIFY ANY POTENTIAL CONFLICTS WITH PROPOSED CONSTRUCTION. CONTACT PROJECT ENGINEER IMMEDIATELY IF ANY CONFLICTS ARE IDENTIFIED.

PRIOR TO ANY CONSTRUCTION ACTIVITIES, VERIFY EXISTING TOPOGRAPHY IS CONSISTENT WITH WHAT IS SHOWN ON PLANS AND IF THERE ARE ANY POTENTIAL CONFLICTS WITH PROPOSED CONSTRUCTION ACTIVITIES. CONTACT PROJECT ENGINEER IMMEDIATELY IF ANY CONFLICTS ARE IDENTIFIED.

CALL 811 AT LEAST 48 HOURS BEFORE YOU DIG

REVISION	DESCRIPTION	DATE	BY

CONTOUR ENGINEERING • LLC
CIVIL ENGINEERS ~ SURVEYORS ~ LAND PLANNERS
Phone: 253-857-5454 ~ Fax: 253-509-0044 ~ info@contourpllc.com
Mailing Address: P.O. Box 949, Gig Harbor, WA 98335
Physical Address: 4706 97th Street NW, Suite 100, Gig Harbor, WA 98332

JEREMY F. HAUG — STATE OF WASHINGTON — REGISTERED PROFESSIONAL ENGINEER

29 July 2024

SHEET TITLE: TESC PLAN

MCCORMICK WOODS DIVISION 4 NORTH PARK

CLIENT: MCCORMICK COMMUNITIES LLC
805 KIRKLAND AVE, SUITE 200
KIRKLAND, WA 98033

CONTACT: GREG KRABBE
PHONE: (425) 750-8400

DESIGNER: M. GOULARTE
ENGINEER: J. HAUG
DRAWN: L. BESLER
S 4&5 T 23 N R 01E WM
DATE: 2024.07.29
REVISED:

PROJECT: 24-118
DWG NAME: 24-118-C

SHEET	REV.
C3	△

MCCORMICK WOODS DIVISION 4 NORTH PARK

A PORTION OF SECTION 4 & 5, TOWNSHIP 23N, RANGE 01 E, W.M.,
CITY OF PORT ORCHARD, KITSAP COUNTY, WASHINGTON
TESC NOTES AND DETAILS

DEPARTMENT OF ECOLOGY BMP T5.13: POST CONSTRUCTION SOIL QUALITY AND DEPTH

SOIL RETENTION. RETAIN, IN AN UNDISTURBED STATE, THE DUFF LAYER AND NATIVE TOPSOIL TO THE MAXIMUM EXTENT PRACTICABLE. IN ANY AREAS REQUIRING GRADING, REMOVE AND STOCKPILE THE DUFF LAYER AND TOPSOIL ON SITE IN A DESIGNATED, CONTROLLED AREA, NOT ADJACENT TO PUBLIC RESOURCES AND CRITICAL AREAS, TO BE REAPPLIED TO OTHER PORTIONS OF THE SITE WHERE FEASIBLE.

SOIL QUALITY. ALL AREAS SUBJECT TO CLEARING AND GRADING THAT HAVE NOT BEEN COVERED BY IMPERVIOUS SURFACE, INCORPORATED INTO A DRAINAGE FACILITY OR ENGINEERED AS STRUCTURAL FILL OR SLOPE SHALL, AT PROJECT COMPLETION, DEMONSTRATE THE FOLLOWING:

A TOPSOIL LAYER WITH A MINIMUM ORGANIC MATTER CONTENT OF 10% DRY WEIGHT IN PLANTING BEDS, AND 5% ORGANIC MATTER CONTENT IN TURF AREAS, AND A PH FROM 6.0 TO 8.0 OR MATCHING THE PH OF THE UNDISTURBED SOIL. THE TOPSOIL LAYER SHALL HAVE A MINIMUM DEPTH OF EIGHT INCHES EXCEPT WHERE TREE ROOTS LIMIT THE DEPTH OF INCORPORATION OF AMENDMENTS NEEDED TO MEET THE CRITERIA. SUBSOILS BELOW THE TOPSOIL LAYER SHOULD BE SCARIFIED AT LEAST 4 INCHES WITH SOME INCORPORATION OF THE UPPER MATERIAL TO AVOID STRATIFIED LAYERS, WHERE FEASIBLE.

MULCH PLANTING BEDS WITH 2 INCHES OF ORGANIC MATERIAL

USE COMPOST AND OTHER MATERIALS THAT MEET THESE ORGANIC CONTENT REQUIREMENTS:

THE ORGANIC CONTENT FOR "PRE-APPROVED" AMENDMENT RATES CAN BE MET ONLY USING COMPOST MEETING THE COMPOST SPECIFICATION FOR BMP T7.30: BIORETENTION, WITH THE EXCEPTION THAT THE COMPOST MAY HAVE UP TO 35% BIOSOLIDS OR MANURE.

THE COMPOST MUST ALSO HAVE AN ORGANIC MATTER CONTENT OF 40% TO 65%, AND A CARBON TO NITROGEN RATIO BELOW 25:1.

THE CARBON TO NITROGEN RATIO MAY BE AS HIGH AS 35:1 FOR PLANTINGS COMPOSED ENTIRELY OF PLANTS NATIVE TO THE PUGET SOUND LOWLANDS REGION.

CALCULATED AMENDMENT RATES MAY BE MET THROUGH USE OF COMPOSTED MATERIAL MEETING (A.) ABOVE; OR OTHER ORGANIC MATERIALS AMENDED TO MEET THE CARBON TO NITROGEN RATIO REQUIREMENTS, AND NOT EXCEEDING THE CONTAMINANT LIMITS IDENTIFIED IN TABLE 220-B, TESTING PARAMETERS, IN WAC 173-350-220.

THE RESULTING SOIL SHOULD BE CONDUCIVE TO THE TYPE OF VEGETATION TO BE ESTABLISHED.

IMPLEMENTATION OPTIONS: THE SOIL QUALITY DESIGN GUIDELINES LISTED ABOVE CAN BE MET BY USING ONE OF THE METHODS LISTED BELOW:

LEAVE UNDISTURBED NATIVE VEGETATION AND SOIL, AND PROTECT FROM COMPACTION DURING CONSTRUCTION.

AMEND EXISTING SITE TOPSOIL OR SUBSOIL EITHER AT DEFAULT "PRE-APPROVED" RATES, OR AT CUSTOM CALCULATED RATES BASED ON TESTS OF THE SOIL AND AMENDMENT.

STOCKPILE EXISTING TOPSOIL DURING GRADING, AND REPLACE IT PRIOR TO PLANTING. STOCKPILED TOPSOIL MUST ALSO BE AMENDED IF NEEDED TO MEET THE ORGANIC MATTER OR DEPTH REQUIREMENTS, EITHER AT A DEFAULT "PRE-APPROVED" RATE OR AT A CUSTOM CALCULATED RATE.

IMPORT TOPSOIL MIX OF SUFFICIENT ORGANIC CONTENT AND DEPTH TO MEET THE REQUIREMENTS.

MORE THAN ONE METHOD MAY BE USED ON DIFFERENT PORTIONS OF THE SAME SITE. SOIL THAT ALREADY MEETS THE DEPTH AND ORGANIC MATTER QUALITY STANDARDS, AND IS NOT COMPACTED, DOES NOT NEED TO BE AMENDED.

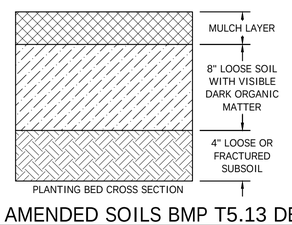

1 AMENDED SOILS BMP T5.13 DETAIL
NOT TO SCALE

INLET PROTECTION NOTE

INLET PROTECTION SHALL BE INSTALLED IN ALL EXISTING INLETS DOWNSTREAM AND WITHIN 500 FEET OF SITE DISTURBED AREAS. ALL NEW INLETS, BOTH ON SITE AND OFF SITE INLETS (IF ANY) SHALL HAVE INLET PROTECTION AS WELL.

CITY OF PORT ORCHARD STANDARD EROSION AND SEDIMENT CONTROL NOTES

27. APPROVAL OF THESE TEMPORARY EROSION AND SEDIMENT CONTROL (TESC) PLANS DOES NOT CONSTITUTE AN APPROVAL OF PERMANENT ROAD OR DRAINAGE DESIGN (E.G., SIZE AND LOCATION OF ROADS, PIPES, RESTRICTORS, CHANNELS, RETENTION FACILITIES, UTILITIES, ETC.).

28. THE IMPLEMENTATION OF THESE TESC PLANS AND THE CONSTRUCTION, MAINTENANCE, REPLACEMENT, AND UPGRADING OF THESE TESC FACILITIES IS THE RESPONSIBILITY OF THE APPLICANT/CESCL UNTIL ALL CONSTRUCTION IS APPROVED.

29. THE BOUNDARIES OF THE CLEARING LIMITS SHOWN ON THESE PLANS SHALL BE CLEARLY FLAGGED BY A CONTINUOUS LENGTH OF SURVEY TAPE (OR FENCING, IF REQUIRED) PRIOR TO CONSTRUCTION. DURING THE CONSTRUCTION PERIOD, NO DISTURBANCE BEYOND THE CLEARING LIMITS SHALL BE PERMITTED. THE CLEARING LIMITS SHALL BE MAINTAINED BY THE APPLICANT/CESCL FOR THE DURATION OF CONSTRUCTION.

30. STABILIZED CONSTRUCTION ENTRANCES, IN ACCORDANCE WITH STANDARD DETAILS SHALL BE INSTALLED AT THE BEGINNING OF CONSTRUCTION AND MAINTAINED FOR THE DURATION OF THE PROJECT. ADDITIONAL MEASURES, SUCH AS CONSTRUCTED WHEEL WASH SYSTEMS OR WASH PADS, MAY BE REQUIRED TO ENSURE THAT ALL PAVED AREAS ARE KEPT CLEAN AND TRACK-OUT TO STREET RIGHT-OF- WAY DOES NOT OCCUR FOR THE DURATION OF THE PROJECT.

31. THE TESC FACILITIES SHOWN ON THESE PLANS MUST BE CONSTRUCTED PRIOR TO ALL CLEARING AND GRADING TO ENSURE THAT THE TRANSPORT OF SEDIMENT TO SURFACE WATERS, DRAINAGE SYSTEMS, AND ADJACENT PROPERTIES IS REDUCED TO REQUIRED LEVELS.

32. THE TESC FACILITIES SHOWN ON THESE PLANS ARE THE MINIMUM REQUIREMENTS FOR ANTICIPATED SITE CONDITIONS. DURING THE CONSTRUCTION PERIOD, THESE TESC FACILITIES SHALL BE UPGRADED AS NEEDED FOR UNEXPECTED STORM EVENTS AND MODIFIED TO ACCOUNT FOR CHANGING SITE CONDITIONS (E.G., ADDITIONAL COVER MEASURES, ADDITIONAL SUMP PUMPS, RELOCATION OF DITCHES AND SILT FENCES, ADDITIONAL PERIMETER PROTECTION, ETC.), AS DIRECTED BY THE CITY ENGINEER.

33. THE TESC FACILITIES SHALL BE INSPECTED DAILY BY THE APPLICANT/CESCL AND MAINTAINED TO ENSURE CONTINUED PROPER FUNCTIONING. WRITTEN RECORDS SHALL BE KEPT OF WEEKLY REVIEWS OF THE TESC FACILITIES AND OF SAMPLES TAKEN DURING THE WET SEASON (OCTOBER 1 TO APRIL 30) AND OF MONTHLY REVIEWS DURING THE DRY SEASON (MAY 1 TO SEPTEMBER 30).

34. ANY AREAS OF EXPOSED SOILS, INCLUDING ROADWAY EMBANKMENTS, THAT WILL NOT BE DISTURBED FOR TWO DAYS DURING THE WET SEASON OR SEVEN DAYS DURING THE DRY SEASON SHALL BE IMMEDIATELY STABILIZED WITH THE APPROVED TESC METHODS (E.G., SEEDING, MULCHING, PLASTIC COVERING, ETC.).

35. ANY AREA NEEDING TESC MEASURES NOT REQUIRING IMMEDIATE ATTENTION SHALL BE ADDRESSED WITHIN SEVEN (7) DAYS.

36. THE TESC FACILITIES ON INACTIVE SITES SHALL BE INSPECTED AND MAINTAINED A MINIMUM OF ONCE A MONTH OR WITHIN TWENTY-FOUR (24) HOURS FOLLOWING A STORM EVENT.

37. AT NO TIME SHALL MORE THAN ONE (1) FOOT OF SEDIMENT BE ALLOWED TO ACCUMULATE WITHIN A CATCH BASIN. ALL CATCH BASINS AND CONVEYANCE LINES SHALL BE CLEANED PRIOR TO FINAL INSPECTION. THE CLEANING OPERATION SHALL NOT FLUSH SEDIMENT-LADEN WATER INTO A DOWNSTREAM SYSTEM.

38. ANY PERMANENT FLOW CONTROL FACILITY USED AS A TEMPORARY SETTLING BASIN SHALL BE MODIFIED WITH THE NECESSARY EROSION CONTROL MEASURES AND SHALL PROVIDE ADEQUATE STORAGE CAPACITY. IF THE FACILITY IS TO FUNCTION ULTIMATELY AS AN INFILTRATION SYSTEM, THE TEMPORARY FACILITY MUST BE GRADED SO THAT THE BOTTOM AND SIDES ARE AT LEAST THREE (3) FEET ABOVE THE FINAL GRADE OF THE PERMANENT FACILITY.

39. WHERE STRAW MULCH FOR TEMPORARY EROSION CONTROL IS REQUIRED, IT SHALL BE APPLIED AT A MINIMUM THICKNESS OF 2 TO 3 INCHES.

40. PRIOR TO THE BEGINNING OF THE WET SEASON (OCTOBER 1), ALL DISTURBED AREAS SHALL BE REVIEWED TO IDENTIFY WHICH AREAS CAN BE SEEDED IN PREPARATION FOR THE WINTER RAINS. DISTURBED AREAS SHALL BE SEEDED WITHIN ONE WEEK OF THE BEGINNING OF THE WET SEASON. A SKETCH MAP OF THOSE AREAS TO BE SEEDED AND THOSE AREAS TO REMAIN UNCOVERED SHALL BE SUBMITTED TO THE CITY OF PORT ORCHARD CITY ENGINEER. THE INSPECTOR CAN REQUIRE SEEDING OF ADDITIONAL AREAS IN ORDER TO PROTECT SURFACE WATERS, ADJACENT PROPERTIES, OR DRAINAGE FACILITIES.

PLASTIC COVERING NOTES

1. PLASTIC SHEETING SHALL HAVE A MINIMUM THICKNESS OF 6 MILS AND SHALL MEET THE REQUIREMENTS OF THE STATE STANDARD SPECIFICATIONS SECTION 9-14.5.
2. COVERING SHALL BE INSTALLED AND MAINTAINED TIGHTLY IN PLACE BY USING SANDBAGS OR TIRES ON ROPES WITH A MAXIMUM 10-FOOT GRID SPACING IN ALL DIRECTIONS. ALL SEAMS SHALL BE TAPED OR WEIGHTED DOWN FULL LENGTH AND THERE SHALL BE A LEAST A 12 INCH OVERLAP OF ALL SEAMS.
3. CLEAR PLASTIC COVERING SHALL BE INSTALLED IMMEDIATELY ON AREAS SEEDED BETWEEN NOVEMBER 1 AND MARCH 31 AND REMAIN UNTIL VEGETATION IS FIRMLY ESTABLISHED.
4. WHEN THE COVERING IS USED ON UN-SEEDED SLOPES, IT SHALL BE KEPT IN PLACE UNTIL THE NEXT SEEDING PERIOD.
5. PLASTIC COVERING SHEETS SHALL BE BURIED TWO FEET AT THE TOP OF SLOPES IN ORDER TO PREVENT SURFACE WATER FLOW BENEATH SHEETS
6. PROPER MAINTENANCE INCLUDES REGULAR CHECKS FOR RIPS AND DISLODGED ENDS.

SEEDING NOTES

1. SEED MIXTURE SHALL BE AS BELOW OR AS APPROVED BY THE CITY AND SHALL BE APPLIED AT THE RATE RECOMMENDED BY THE SUPPLIER

GERMINATION REDTOP	(AGROSTIS ALBA)	10%
ANNUAL RYE	(LOLIUM MULTIFLORUM)	40%
CHEWING FESCUE	(FESTUCA RUBRA COMMUTATA)	40%
WHITE DUTCH CLOVER	(TRIFOLIUM REPENS)	10%

SEED BEDS PLANTED BETWEEN MAY 1 AND OCTOBER 31 WILL REQUIRE IRRIGATION AND OTHER MAINTENANCE AS NECESSARY TO FOSTER AND PROTECT THE ROOT STRUCTURE.

2. FOR SEED BEDS PLANTED BETWEEN OCTOBER 31 AND APRIL 30, ARMORING OF THE SEED BED WILL BE NECESSARY. (E.G., GEOTEXTILES, JUTE MAT, CLEAR PLASTIC COVERING).
3. BEFORE SEEDING, INSTALL NEEDED SURFACE RUNOFF CONTROL MEASURES SUCH AS GRADIENT TERRACES, INTERCEPTOR DIKES, SWALES, LEVEL SPREADERS AND SEDIMENT BASINS.
4. THE SEEDBED SHALL BE FIRM WITH A FAIRLY FINE SURFACE, FOLLOWING SURFACE ROUGHENING. PERFORM ALL OPERATIONS ACROSS OR AT RIGHT ANGLES TO THE SLOPE.
5. FERTILIZERS ARE TO BE USED ACCORDING TO SUPPLIER'S RECOMMENDATIONS. AMOUNTS USED SHOULD BE MINIMIZED, ESPECIALLY ADJACENT TO WATER BODIES AND WETLANDS.

MULCHING NOTES

1. ALL MULCHING SHALL BE IN ACCORDANCE WITH BMP C121. STRAW SHALL NOT BE USES AS A MULCHING OPTION. CONTRACTOR MAY CHOOSE ANY OTHER MULCHING OPTION PER TABLE II-3.6 OF THE DEPARTMENT OF ECOLOGY SWMMWW.
2. MULCHES SHALL BE APPLIED IN ALL AREAS WITH EXPOSED SLOPES GREATER THAN 3:1.
3. MULCHING SHALL BE USED IMMEDIATELY AFTER SEEDING OR IN AREAS WHICH CANNOT BE SEEDED BECAUSE OF THE SEASON.
4. ALL AREAS NEEDING MULCH SHALL BE COVERED BY NOVEMBER 1.

GRADING AND TESC NOTES

1. ON SITE INSPECTIONS ARE REQUIRED AT THE FOLLOWING CONSTRUCTION STAGES:
   - INSPECTION NO. 1: INSTALLATION OF EROSION CONTROL FACILITIES PRIOR TO CLEARING
   - INSPECTION NO. 2: COMPLETION OF CLEARING
   - INSPECTION NO. 3: UPON COMPLETION OF EXCAVATION, FILLING, AND EARTHWORK
   - INSPECTION NO. 4: COMPLETION OF PROJECT
   - INSPECTION NO. 5: AS NEEDED TO DETERMINE COMPLIANCE WITH APPROVED PLANS AND/OR SPECIFICATIONS
2. ALL LIMITS OF CLEARING AND AREAS OF VEGETATION PRESERVATION AS PRESCRIBED ON THE PLANS SHALL BE CLEARLY FLAGGED IN THE FIELD AND OBSERVED DURING CONSTRUCTION.
3. ALL TEMPORARY SEDIMENTATION AND EROSION CONTROL MEASURES, AND PROTECTIVE MEASURES FOR CRITICAL AREAS AND SIGNIFICANT TREES SHALL BE INSTALLED PRIOR TO INITIATING ANY CONSTRUCTION ACTIVITIES.
4. ALL REQUIRED SEDIMENTATION AND EROSION CONTROL FACILITIES MUST BE CONSTRUCTED AND IN OPERATION PRIOR TO ANY LAND CLEARING AND/OR OTHER CONSTRUCTION TO ENSURE THAT SEDIMENT LADEN WATER DOES NOT ENTER ANY EXISTING DRAINAGE SYSTEM. THE CONTRACTOR SHALL SCHEDULE AN INSPECTION OF THE EROSION CONTROL FACILITIES PRIOR TO ANY LAND CLEARING AND/OR OTHER CONSTRUCTION. ALL EROSION AND SEDIMENT FACILITIES SHALL BE MAINTAINED IN A SATISFACTORY CONDITION AS DETERMINED BY THE CITY, UNTIL SUCH TIME THAT CLEARING AND/OR CONSTRUCTION IS COMPLETED AND THE POTENTIAL FOR ON-SITE EROSION HAS PASSED. THE IMPLEMENTATION, MAINTENANCE, REPLACEMENT, AND ADDITIONS TO THE EROSION AND SEDIMENTATION CONTROL SYSTEMS SHALL BE THE RESPONSIBILITY OF THE PERMITTEE.
5. THE EROSION AND SEDIMENTATION CONTROL SYSTEM FACILITIES DEPICTED ON THESE PLANS ARE INTENDED TO BE MINIMUM REQUIREMENTS TO MEET ANTICIPATED SITE CONDITIONS. AS CONSTRUCTION PROGRESSES AND UNEXPECTED OR SEASONAL CONDITIONS DICTATE, FACILITIES WILL BE NECESSARY TO ENSURE COMPLETE SILTATION CONTROL ON THE SITE. DURING THE COURSE OF CONSTRUCTION, IT SHALL BE THE OBLIGATION AND RESPONSIBILITY OF THE PERMITTEE TO ADDRESS ANY NEW CONDITIONS THAT MAY BE CREATED BY HIS ACTIVITIES AND TO PROVIDE ADDITIONAL FACILITIES, OVER AND ABOVE THE MINIMUM REQUIREMENTS, AS MAY BE NEEDED TO PROTECT ADJACENT PROPERTIES, SENSITIVE AREAS, NATURAL WATER COURSES, AND/OR STORM DRAINAGE SYSTEMS.
6. ANY DISTURBED AREA WHICH HAS BEEN STRIPPED OF VEGETATION AND WHERE NO FURTHER WORK IS ANTICIPATED FOR A PERIOD OF 7 DAYS OR MORE DURING THE DRY SEASON (MAY 1 - SEPT 30) OR 2 DAYS OR MORE IN THE WET SEASON (OCT 1 - APR 30), SHALL BE IMMEDIATELY STABILIZED WITH MULCHING, GRASS PLANTING, OR OTHER APPROVED EROSION CONTROL TREATMENT APPLICABLE TO THE TIME OF YEAR IN QUESTION. GRASS SEEDING ALONE WILL BE ACCEPTABLE ONLY DURING THE MONTHS OF MAY THROUGH SEPTEMBER INCLUSIVE. SEEDING MAY PROCEED OUTSIDE THE SPECIFIED TIME PERIOD WHENEVER IT IS IN THE INTEREST OF THE PERMITTEE BUT SHALL BE AUGMENTED WITH MULCHING, NETTING, OR OTHER TREATMENT APPROVED BY THE CITY.
7. IN CASE EROSION OR SEDIMENTATION OCCURS TO ADJACENT PROPERTIES, ALL CONSTRUCTION WORK WITHIN THE DEVELOPMENT THAT WILL FURTHER AGGRAVATE THE SITUATION MUST CEASE, AND THE OWNER/CONTRACTOR SHALL IMMEDIATELY COMMENCE RESTORATION METHODS. RESTORATION ACTIVITY WILL CONTINUE UNTIL SUCH TIME AS THE AFFECTED PROPERTY OWNER IS SATISFIED.
8. NO TEMPORARY OR PERMANENT STOCKPILING OF MATERIALS OR EQUIPMENT SHALL OCCUR WITHIN CRITICAL AREAS OR ASSOCIATED BUFFERS, OR THE CRITICAL ROOT ZONE FOR VEGETATION PROPOSED FOR RETENTION.

VERIFICATION NOTE

ALL EXISTING UTILITIES IN THE CONSTRUCTION AREA SHALL BE IDENTIFIED AND VERIFIED FOR DEPTH AND LOCATION PRIOR TO ANY CONSTRUCTION ACTIVITIES SO TO IDENTIFY ANY POTENTIAL CONFLICTS WITH PROPOSED CONSTRUCTION. CONTACT PROJECT ENGINEER IMMEDIATELY IF ANY CONFLICTS ARE IDENTIFIED.

PRIOR TO ANY CONSTRUCTION ACTIVITIES, VERIFY EXISTING TOPOGRAPHY IS CONSISTENT WITH WHAT IS SHOWN ON PLANS AND IF THERE ARE ANY POTENTIAL CONFLICTS WITH PROPOSED CONSTRUCTION ACTIVITIES. CONTACT PROJECT ENGINEER IMMEDIATELY IF ANY CONFLICTS ARE IDENTIFIED.

CALL 811 AT LEAST 48 HOURS BEFORE YOU DIG

REVISION	DESCRIPTION	DATE	BY

CONTOUR ENGINEERING • LLC
CIVIL ENGINEERS ~ SURVEYORS ~ LAND PLANNERS
Phone: 253-857-5454 ~ Fax: 253-509-0044 ~ info@contourpllc.com
Mailing Address: P.O. Box 949, Gig Harbor, WA 98335
Physical Address: 4706 97th Street NW, Suite 100, Gig Harbor, WA 98332

JEREMY F. HAUG, STATE OF WASHINGTON, REGISTERED PROFESSIONAL ENGINEER
29 July 2024

SHEET TITLE: TESC NOTES AND DETAILS

MCCORMICK WOODS DIVISION 4 NORTH PARK

CLIENT: McCORMICK COMMUNITIES, LLC
805 KIRKLAND AVE, SUITE 200
KIRKLAND, WA 98033

CONTACT: GREG KRABBE
PHONE: (425) 750-8400

DESIGNER: M. GOULARTE
ENGINEER: J. HAUG
DRAWN: L. BESLER
S4&5 T23 N R01E WM
DATE: 2024.07.29
REVISED:

PROJECT: 24-118
DWG NAME: 24-118-C

SHEET: C4 — REV.

MCCORMICK WOODS DIVISION 4 NORTH PARK

A PORTION OF SECTION 4 & 5, TOWNSHIP 23N, RANGE 01 E, W.M.,
CITY OF PORT ORCHARD, KITSAP COUNTY, WASHINGTON
TESC NOTES AND DETAILS

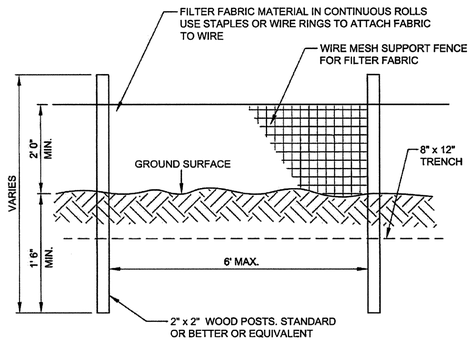

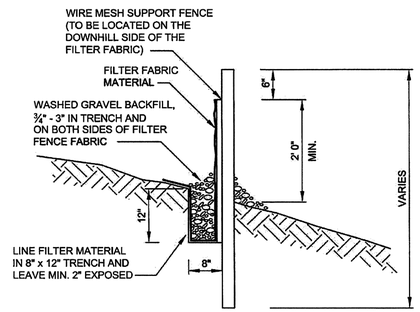

1 FILTER FABRIC FENCE
NOT TO SCALE

FILTER FABRIC NOTES

1. FILTER FABRIC SHALL BE PURCHASED IN A CONTINUOUS ROLL AND CUT TO THE LENGTH OF THE BARRIER TO AVOID USE OF JOINTS. WHEN JOINTS ARE NECESSARY, FILTER CLOTH SHALL BE SPLICED TOGETHER ONLY AT A SUPPORT POST, WITH A MINIMUM 6-INCH OVERLAP, AND SECURELY FASTENED AT BOTH ENDS TO POSTS.
2. POSTS SHALL BE SPACED A MAXIMUM OF 6 FEET APART AND DRIVEN SECURELY INTO THE GROUND (MINIMUM OF 30 INCHES).
3. A TRENCH SHALL BE EXCAVATED APPROXIMATELY 8 INCHES WIDE AND 12 INCHES DEEP ALONG THE LINE OF POSTS AND UPSLOPE FROM THE BARRIER. THIS TRENCH SHALL BE BACKFILLED WITH WASHED GRAVEL.
4. WHEN STANDARD STRENGTH FILTER FABRIC IS USED, A WIRE MESH SUPPORT FENCE SHALL BE FASTENED SECURELY TO THE UPSLOPE SIDE OF THE POSTS USING HEAVY-DUTY WIRE STAPLES AT LEAST 1 INCH LONG, TIE WIRES OR HOG RINGS. THE WIRE SHALL EXTEND INTO THE TRENCH A MINIMUM OF 4 INCHES AND SHALL NOT EXTEND MORE THAN 24 INCHES ABOVE THE ORIGINAL GROUND SURFACE.
5. THE STANDARD STRENGTH FILTER FABRIC SHALL BE STAPLED OR WIRED TO THE FENCE, AND 20 INCHES OF THE FABRIC SHALL BE EXTENDED INTO THE TRENCH. THE FABRIC SHALL NOT EXTEND MORE THAN 24 INCHES ABOVE THE ORIGINAL GROUND SURFACE. FILTER FABRIC SHALL NOT BE STAPLED TO EXISTING TREES.
6. WHEN EXTRA-STRENGTH FILTER FABRIC AND CLOSER POST SPACING IS USED, THE WIRE MESH SUPPORT FENCE MAY BE ELIMINATED. IN SUCH A CASE, THE FILTER FABRIC IS STAPLED OR WIRED DIRECTLY TO THE POSTS WITH ALL OTHER PROVISIONS OF ABOVE NOTES APPLYING.
7. FILTER FABRIC FENCES SHALL NOT BE REMOVED BEFORE THE UPSLOPE AREA HAS BEEN PERMANENTLY STABILIZED.
8. FILTER FABRIC FENCES SHALL BE INSPECTED IMMEDIATELY AFTER EACH RAINFALL AND AT LEAST DAILY DURING PROLONGED RAINFALL. ANY REQUIRED REPAIRS SHALL BE MADE IMMEDIATELY.
9. SILT FENCES WILL BE INSTALLED PARALLEL TO ANY SLOPE CONTOURS.
10. CONTRIBUTING LENGTH TO FENCE WILL NOT BE GREATER THAN 100 FEET.
11. DO NOT INSTALL BELOW AN OUTLET PIPE OR WEIR.
12. INSTALL DOWNSLOPE OF EXPOSED AREAS.
13. DO NOT DRIVE OVER OR FILL OVER SILT FENCES.

INLET PROTECTION NOTES

1. PLACE CONCRETE BLOCKS LENGTHWISE ON THEIR SIDES IN A SINGLE ROW AROUND THE PERIMETER OF THE INLET, SO THAT THE OPEN ENDS FACE OUTWARD, NOT UPWARD. THE ENDS OF ADJACENT BLOCKS SHALL ABUT. THE HEIGHT OF THE BARRIER CAN BE VARIED, DEPENDING ON DESIGN NEEDS, BY STACKING COMBINATIONS OF BLOCKS THAT ARE 4 INCHES, AND 12 INCHES WIDE. THE ROW OF BLOCKS SHALL BE AT LEAST 12 INCHES BUT NO GREATER THAN 24 INCHES.
2. PLACE WIRE MESH OVER THE OUTSIDE VERTICAL FACE (OPEN END) OF THE CONCRETE BLOCKS TO PREVENT STONE FROM BEING WASHED THROUGH THE BLOCKS. USE HARDWARE CLOTH OR COMPARABLE WIRE MESH WITH ½ -INCH OPENINGS.
3. PILE STONE AGAINST THE WIRE MESH TO THE TOP OF THE BLOCKS. USE ¾ TO 3 INCH GRAVEL.
4. PLACE WIRE MESH OVER THE DROP INLET SO THAT THE WIRE EXTENDS A MINIMUM OF 1 FOOT BEYOND EACH SIDE OF THE INLET STRUCTURE. USE HARDWARE CLOTH OR COMPARABLE WIRE MESH WITH 1/2-INCH OPENINGS. IF MORE THAN ONE STRIP OF MESH IS NECESSARY, OVERLAP THE STRIPS. PLACE FILTER FABRIC OVER WIRE MESH.
5. PLACE ¾ INCH GRAVEL OVER WIRE MESH. THE DEPTH OF STONE SHALL BE AT AT LEAST 12 INCHES OVER THE ENTIRE INLET OPENING. EXTEND THE STONE BEYOND THE INLET OPENING AT LEAST 18 INCHES ON ALL SIDES.
6. IF THE STONE FILTER BECOMES CLOGGED WITH SEDIMENT, THE STONES MUST BE PULLED AWAY FORM THE INLET AND CLEANED OR REPLACED.

NOTES:

1. PERFORM MAINTENANCE IN ACCORDANCE WITH STANDARD SPECIFICATION 8-01.3(15).
2. SIZE THE BELOW GRATE INLET DEVICE (BGID) FOR THE STORM WATER STRUCTURE IT WILL SERVICE.
3. THE BGID SHALL HAVE A BUILT-IN HIGH-FLOW RELIEF SYSTEM (OVERFLOW BYPASS).
4. THE RETRIEVAL SYSTEM MUST ALLOW REMOVAL OF THE BGID WITHOUT SPILLING THE COLLECTED MATERIAL.

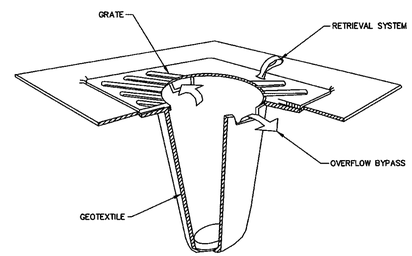

1. INSERT SHALL BE INSTALLED PRIOR TO CLEARING AND GRADING ACTIVITY, OR UPON PLACEMENT OF A NEW CATCH BASIN.
2. SEDIMENT SHALL BE REMOVED FROM THE UNIT WHEN IT BECOMES HALF FULL.
3. SEDIMENT REMOVAL SHALL BE ACCOMPLISHED BY REMOVING THE INSERT, EMPTYING AND RE-INSERTING IT INTO THE CATCH BASIN.

2 INLET PROTECTION
NOT TO SCALE

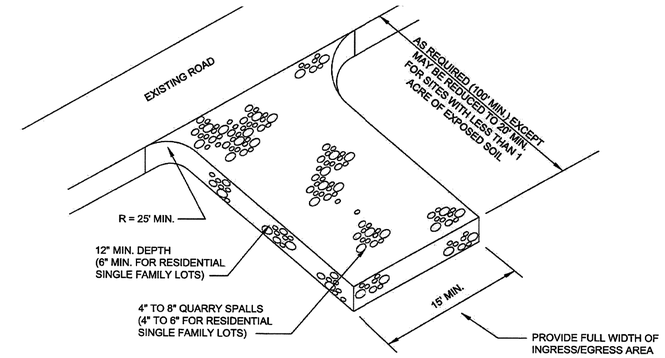

CONSTRUCTION ENTRANCE NOTES

1. MATERIAL SHALL BE 4" TO 8" QUARRY SPALLS (4 TO 6 INCH FOR RESIDENTIAL SINGLE FAMILY LOTS) AND MAY BE TOP-DRESSED WITH 1 TO 3 INCH ROCK.
2. THE ROCK PAD SHALL BE AT LEAST 12" THICK AND 100' LONG (REDUCED TO 20 FEET FOR SITES LESS THAN 1 ACRE OF DISTURBED SOIL) WIDTH SHALL BE FULL WIDTH OF INGRESS AND EGRESS AREA. SMALLER PADS MAY BE APPROVED FOR SINGLE-FAMILY RESIDENTIAL AND COMMERCIAL SITES .
3. ADDITIONAL ROCK SHALL BE ADDED PERIODICALLY TO MAINTAIN FUNCTION OF THE PAD.
4. IF THE PAD DOES NOT ADEQUATELY REMOVE MUD FROM THE VEHICLE WHEELS, THE WHEELS SHALL BE HOSED OFF BEFORE THE VEHICLE ENTERS A PAVED STREET.THE WASHING SHALL BE DONE ON AN AREA COVERED WITH CRUSHED ROCK AND WASH WATER SHALL DRAIN TO A SEDIMENT RETENTION FACILITY OR THROUGH A SILT FENCE.
5. CONSTRUCTION ENTRANCES SHALL BE INSTALLED AT PROPOSED ROAD LOCATION AFTER UTILITY INSTALLATION DURING THE DRY SEASON AND AFTER GRADING IF UTILITIES ARE NOT COMPLETED PRIOR TO THE WET SEASON.

3 CONSTRUCTION ENTRANCE
NOT TO SCALE

VERIFICATION NOTE

ALL EXISTING UTILITIES IN THE CONSTRUCTION AREA SHALL BE IDENTIFIED AND VERIFIED FOR DEPTH AND LOCATION PRIOR TO ANY CONSTRUCTION ACTIVITIES SO TO IDENTIFY ANY POTENTIAL CONFLICTS WITH PROPOSED CONSTRUCTION. CONTACT PROJECT ENGINEER IMMEDIATELY IF ANY CONFLICTS ARE IDENTIFIED.

PRIOR TO ANY CONSTRUCTION ACTIVITIES, VERIFY EXISTING TOPOGRAPHY IS CONSISTENT WITH WHAT IS SHOWN ON PLANS AND IF THERE ARE ANY POTENTIAL CONFLICTS WITH PROPOSED CONSTRUCTION ACTIVITIES. CONTACT PROJECT ENGINEER IMMEDIATELY IF ANY CONFLICTS ARE IDENTIFIED.

CALL 811 AT LEAST 48 HOURS BEFORE YOU DIG

REVISION	DESCRIPTION	DATE	BY

CONTOUR ENGINEERING • LLC
CIVIL ENGINEERS ~ SURVEYORS ~ LAND PLANNERS
Phone: 253-857-5454 ~ Fax: 253-509-0044 ~ info@contourpllc.com
Mailing Address: P.O. Box 949, Gig Harbor, WA 98335
Physical Address: 4706 97th Street NW, Suite 100, Gig Harbor, WA 98332

JEREMY F. HAUG — STATE OF WASHINGTON — 40184 — REGISTERED PROFESSIONAL ENGINEER
29 July 2024

SHEET TITLE: TESC NOTES AND DETAILS

MCCORMICK WOODS DIVISION 4 NORTH PARK

CLIENT: McCORMICK COMMUNITIES, LLC
805 KIRKLAND AVE. SUITE 200
KIRKLAND, WA 98033

CONTACT: GREG KRABBE
PHONE: (425) 750-8400

DESIGNER: M. GOULARTE
ENGINEER: J. HAUG
DRAWN: L. BESLER
S4&5 T23 N R01E WM
DATE: 2024.07.29
REVISED:

PROJECT: 24-118
DWG NAME: 24-118-C

SHEET: C5 — REV. △

MCCORMICK WOODS DIVISION 4 NORTH PARK

A PORTION OF SECTION 4 & 5, TOWNSHIP 23N, RANGE 01 E, W.M.,
CITY OF PORT ORCHARD, KITSAP COUNTY, WASHINGTON
GRADING PLAN

GRAPHIC SCALE
0 10 20
1 INCH = 10 FEET (22"x34")
1 INCH = 20 FEET (11"x17")

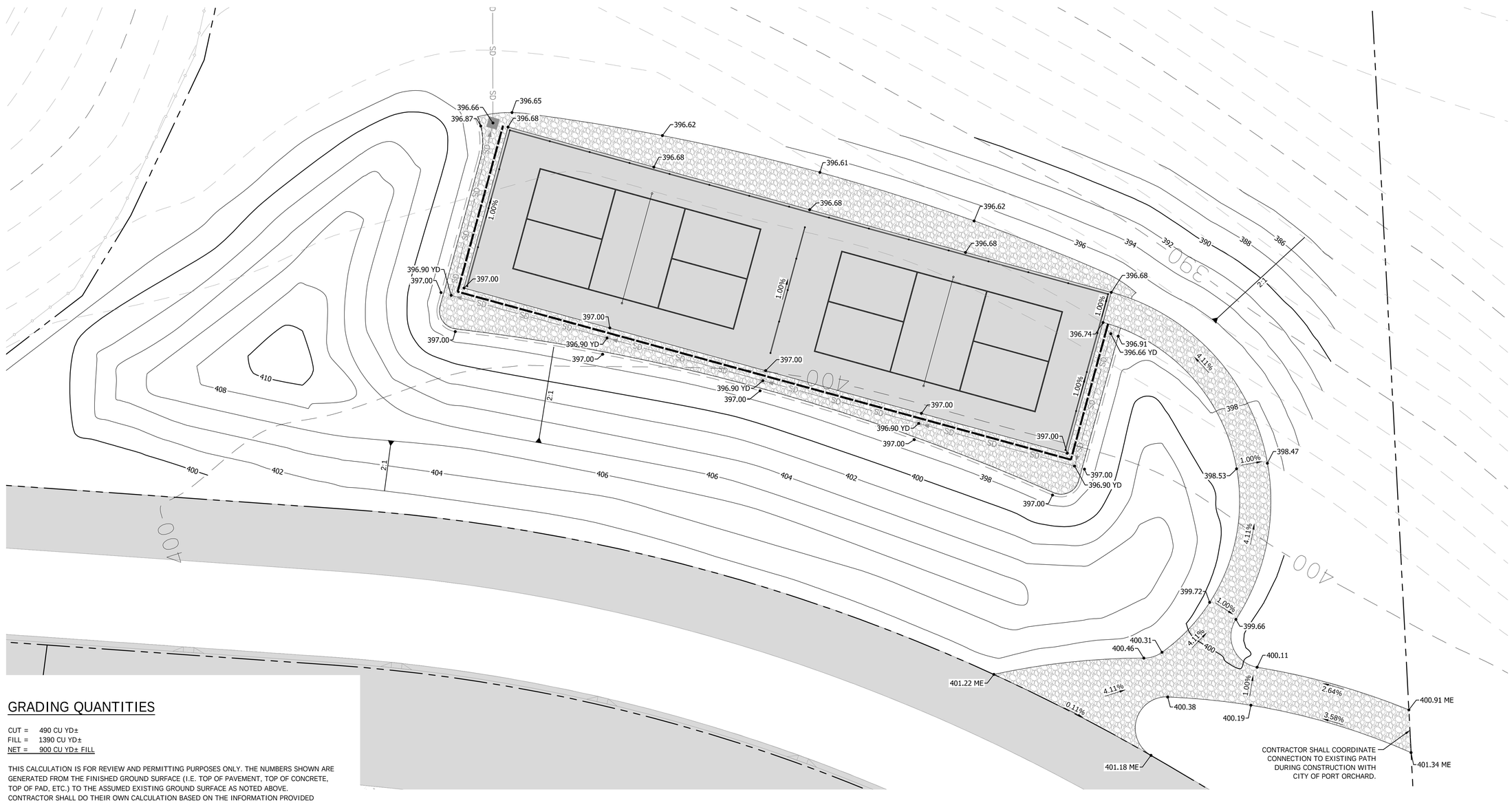

GRADING QUANTITIES

CUT = 490 CU YD±
FILL = 1390 CU YD±
NET = 900 CU YD± FILL

THIS CALCULATION IS FOR REVIEW AND PERMITTING PURPOSES ONLY. THE NUMBERS SHOWN ARE GENERATED FROM THE FINISHED GROUND SURFACE (I.E. TOP OF PAVEMENT, TOP OF CONCRETE, TOP OF PAD, ETC.) TO THE ASSUMED EXISTING GROUND SURFACE AS NOTED ABOVE. CONTRACTOR SHALL DO THEIR OWN CALCULATION BASED ON THE INFORMATION PROVIDED WITHIN THESE PLANS.

THE QUANTITIES MAY VARY BASED ON THE FOLLOWING FACTORS:

1. SHRINK/SWELL OF EXISTING SOILS
2. VARIANCE OF VEGETATION THICKNESS AND UNSUITABLE TOPSOIL
3. SUBBASE REQUIREMENTS FOR THE ROAD SECTIONS
4. SUBBASE REQUIREMENTS FOR THE BUILDING FOUNDATION BASED ON THE FINAL STRUCTURAL DESIGN
5. TRENCHING EXCAVATION FOR PROPOSED UTILITIES
6. ADDITIONAL CUT/FILL MAY BE REQUIRED FOR FUTURE UTILIZATION OF THE SITE
7. SOME AREAS OF THE SITE HAVE ALREADY BEEN STRIPPED FROM PERVIOUS PHASES OF DEVELOPMENT, THESE AREAS ARE ACCOUNTED FOR INTHE GRADING QUANTITIES NOTED ABOVE, BUT HAVE NOT BEEN VERIFIED BY A LICENSED SURVEYOR.

CALL 811 AT LEAST 48 HOURS BEFORE YOU DIG

VERIFICATION NOTE

ALL EXISTING UTILITIES IN THE CONSTRUCTION AREA SHALL BE IDENTIFIED AND VERIFIED FOR DEPTH AND LOCATION PRIOR TO ANY CONSTRUCTION ACTIVITIES SO TO IDENTIFY ANY POTENTIAL CONFLICTS WITH PROPOSED CONSTRUCTION. CONTACT PROJECT ENGINEER IMMEDIATELY IF ANY CONFLICTS ARE IDENTIFIED.

PRIOR TO ANY CONSTRUCTION ACTIVITIES, VERIFY EXISTING TOPOGRAPHY IS CONSISTENT WITH WHAT IS SHOWN ON PLANS AND IF THERE ARE ANY POTENTIAL CONFLICTS WITH PROPOSED CONSTRUCTION ACTIVITIES. CONTACT PROJECT ENGINEER IMMEDIATELY IF ANY CONFLICTS ARE IDENTIFIED.

REVISION	DESCRIPTION	DATE	BY

CONTOUR ENGINEERING • LLC
CIVIL ENGINEERS ~ SURVEYORS ~ LAND PLANNERS
Phone: 253-857-5454 ~ Fax: 253-509-0044 ~ info@contourpllc.com
Mailing Address: P.O. Box 949, Gig Harbor, WA 98335
Physical Address: 4706 97th Street NW, Suite 100, Gig Harbor, WA 98332

JEREMY F. HAUG
STATE OF WASHINGTON
41823
REGISTERED
PROFESSIONAL ENGINEER
29 July 2024

SHEET TITLE: GRADING PLAN

MCCORMICK WOODS DIVISION 4 NORTH PARK

CLIENT: MCCORMICK COMMUNITIES LLC
805 KIRKLAND AVE, SUITE 200
KIRKLAND, WA 98033

CONTACT: GREG KRABBE
PHONE: (425) 750-8400

DESIGNER: M. GOULARTE
ENGINEER: J. HAUG
DRAWN: L. BESLER
S 4&5 T 23 N R 01E WM
DATE: 2024.07.29
REVISED:

PROJECT: 24-118
DWG NAME: 24-118-C

SHEET	REV.
C6	△
6 OF 9	

MCCORMICK WOODS DIVISION 4 NORTH PARK

A PORTION OF SECTION 4 & 5, TOWNSHIP 23N, RANGE 01 E, W.M.,
CITY OF PORT ORCHARD, KITSAP COUNTY, WASHINGTON
DRAINAGE PLAN

GRAPHIC SCALE
0 10 20
1 INCH = 10 FEET (22"x34")
1 INCH = 20 FEET (11"x17")

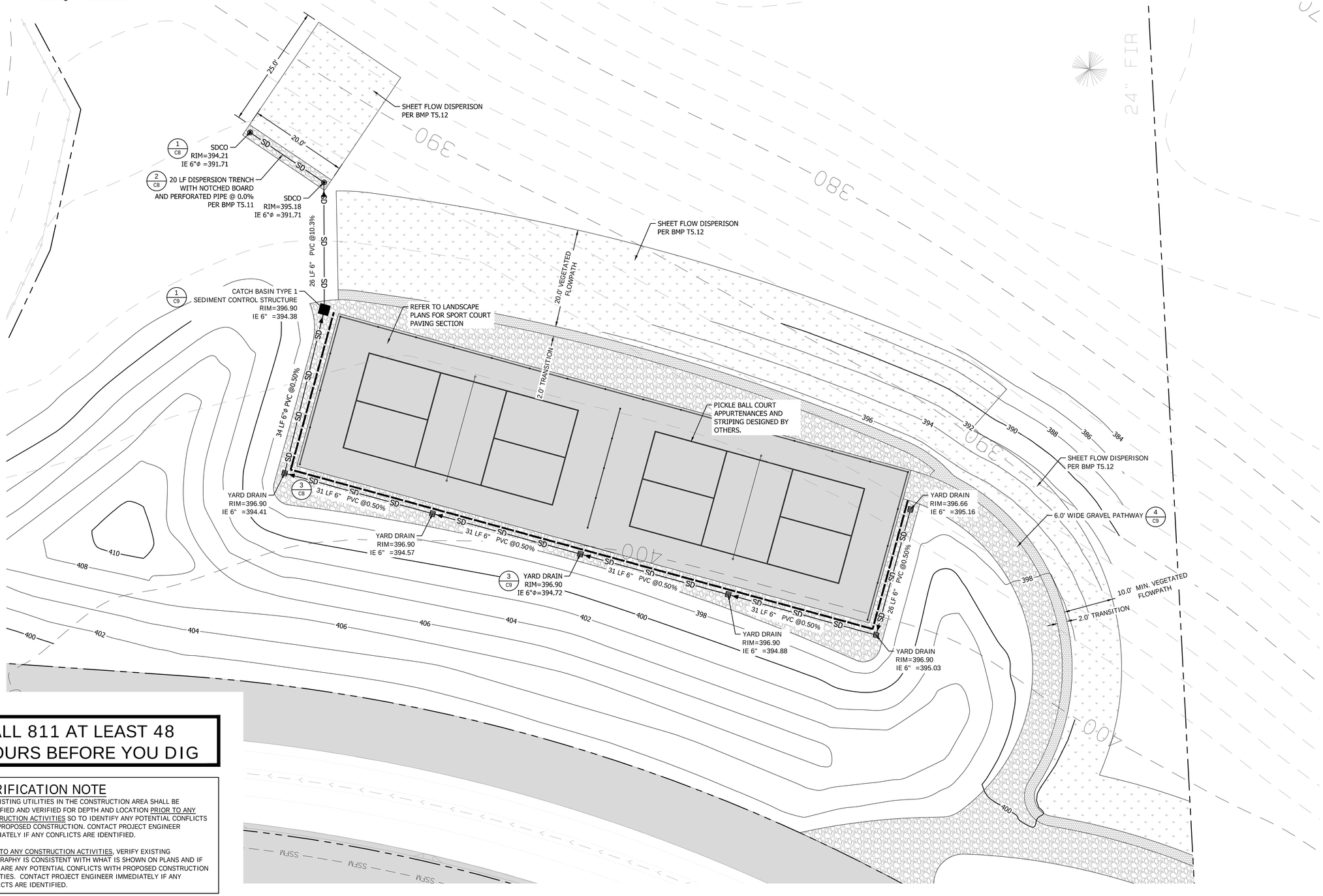

CALL 811 AT LEAST 48 HOURS BEFORE YOU DIG

VERIFICATION NOTE

ALL EXISTING UTILITIES IN THE CONSTRUCTION AREA SHALL BE IDENTIFIED AND VERIFIED FOR DEPTH AND LOCATION PRIOR TO ANY CONSTRUCTION ACTIVITIES SO TO IDENTIFY ANY POTENTIAL CONFLICTS WITH PROPOSED CONSTRUCTION. CONTACT PROJECT ENGINEER IMMEDIATELY IF ANY CONFLICTS ARE IDENTIFIED.

PRIOR TO ANY CONSTRUCTION ACTIVITIES, VERIFY EXISTING TOPOGRAPHY IS CONSISTENT WITH WHAT IS SHOWN ON PLANS AND IF THERE ARE ANY POTENTIAL CONFLICTS WITH PROPOSED CONSTRUCTION ACTIVITIES. CONTACT PROJECT ENGINEER IMMEDIATELY IF ANY CONFLICTS ARE IDENTIFIED.

REVISION	DESCRIPTION	DATE	BY

CONTOUR ENGINEERING • LLC
CIVIL ENGINEERS ~ SURVEYORS ~ LAND PLANNERS
Phone: 253-857-5454 ~ Fax: 253-509-0044 ~ info@contourpllc.com
Mailing Address: P.O. Box 949, Gig Harbor, WA 98335
Physical Address: 4706 97th Street NW, Suite 100, Gig Harbor, WA 98332

JEREMY F. HAUG, STATE OF WASHINGTON, 40159, REGISTERED PROFESSIONAL ENGINEER
29 July 2024

SHEET TITLE: DRAINAGE PLAN

MCCORMICK WOODS DIVISION 4 NORTH PARK

CLIENT: MCCORMICK COMMUNITIES LLC
805 KIRKLAND AVE, SUITE 200
KIRKLAND, WA 98033

CONTACT: GREG KRABBE
PHONE: (425) 750-8400

DESIGNER: M. GOULARTE
ENGINEER: J. HAUG
DRAWN: L. BESLER
S4&5 T23 N R01E WM
DATE: 2024.07.29
REVISED:

PROJECT: 24-118
DWG NAME: 24-118-C

SHEET	REV.
C7	△

MCCORMICK WOODS DIVISION 4 NORTH PARK

A PORTION OF SECTION 4 & 5, TOWNSHIP 23N, RANGE 01 E, W.M., CITY OF PORT ORCHARD, KITSAP COUNTY, WASHINGTON

NOTES AND DETAILS

GENERAL NOTES:

1. ALL CONSTRUCTION SHALL BE IN ACCORDANCE WITH ALL CURRENTLY ADOPTED WSDOT AND APWA SPECIFICATIONS AND PLANS, AND THE CITY OF PORT ORCHARD MUNICIPAL CODE, THE CURRENTLY ADOPTED CITY OF PORT ORCHARD DEVELOPER'S HANDBOOK, THE CURRENTLY ADOPTED SURFACE WATER DESIGN MANUAL AND THE CONDITIONS OF PRELIMINARY SUBDIVISION APPROVAL. IT SHALL BE THE SOLE RESPONSIBILITY OF THE APPLICANT AND THE PROFESSIONAL CIVIL ENGINEER TO CORRECT ANY ERROR, OMISSION, OR VARIATION FROM THE ABOVE REQUIREMENTS FOUND IN THESE PLANS. ALL CORRECTIONS SHALL BE AT NO ADDITIONAL COST OR LIABILITY TO THE CITY OF PORT ORCHARD.

2. THE DESIGN ELEMENTS WITHIN THESE PLANS HAVE BEEN REVIEWED ACCORDING TO THE PORT ORCHARD DESIGN STANDARDS. SOME ELEMENTS MAY HAVE BEEN OVERLOOKED OR MISSED BY THE CITY OF PORT ORCHARD CITY ENGINEER. ANY DEVIATION FROM ADOPTED STANDARDS IS NOT ALLOWED UNLESS SPECIFICALLY APPROVED BY THE CITY OF PORT ORCHARD CITY ENGINEER, PRIOR TO CONSTRUCTION.

3. APPROVAL OF THESE ENGINEERING PLANS SUCH AS FOR ROADS, GRADING, OR DRAINAGE DOES NOT CONSTITUTE AN APPROVAL OF ANY OTHER DESIGN (E.G., WATER, SEWER, GAS, ELECTRICAL, ETC.).

4. BEFORE ANY CONSTRUCTION OR DEVELOPMENT ACTIVITY, A PRECONSTRUCTION MEETING MUST BE HELD BETWEEN THE CITY OF PORT ORCHARD PUBLIC WORKS DEPARTMENT, THE APPLICANT AND THE APPLICANT'S CONSTRUCTION REPRESENTATIVE.

5. PROOF OF LIABILITY INSURANCE SHALL BE SUBMITTED TO THE CITY OF PORT ORCHARD PRIOR TO THE PRECONSTRUCTION MEETING.

6. A COPY OF THESE APPROVED PLANS MUST BE ON THE JOB SITE WHENEVER CONSTRUCTION IS IN PROGRESS.

7. CONSTRUCTION NOISE SHALL COMPLY WITH THE CURRENT POMC SECTION 9.24.050.

8. IT SHALL BE THE APPLICANT /CONTRACTOR'S RESPONSIBILITY TO OBTAIN ALL RIGHT-OF-WAY PERMITS AND CONSTRUCTION EASEMENTS NECESSARY BEFORE INITIATING OFF-SITE WORK WITHIN A CITY OF PORT ORCHARD STREET RIGHT-OF-WAY.

9. FRANCHISED UTILITIES OR OTHER INSTALLATIONS THAT ARE NOT SHOWN ON THESE APPROVED PLANS SHALL NOT BE CONSTRUCTED UNLESS AN APPROVED SET OF PLANS IS SUBMITTED TO THE CITY OF PORT ORCHARD PRIOR TO CONSTRUCTION.

10. THE VERTICAL DATUM SHALL BE NAVD 1988 AND THE HORIZONTAL DATUM SHALL BE NAD 1983 HARN STATE PLANE WASHINGTON NORTH FIPS 4601 FEET.

11. GROUNDWATER SYSTEM CONSTRUCTION SHALL BE WITHIN A RIGHT-OF-WAY OR APPROPRIATE DRAINAGE EASEMENT, BUT NOT UNDERNEATH THE ROADWAY SECTION.

12. ALL UTILITY TRENCHES SHALL BE BACKFILLED AND COMPACTED IN ACCORDANCE WITH THE CITY OF PORT ORCHARD STANDARDS.

13. ALL ROADWAY SUBGRADE SHALL BE BACKFILLED, COMPACTED TO 95% MAXIMUM DENSITY AND PREPARED FOR SURFACING IN ACCORDANCE WITH WSDOT STANDARD SPECIFICATION 206.3.

14. OPEN CUTTING OF EXISTING ROADWAYS IS NOT ALLOWED UNLESS SPECIFICALLY APPROVED BY THE CITY OF PORT ORCHARD CITY ENGINEER AND NOTED ON THESE APPROVED PLANS. ANY OPEN CUT SHALL BE RESTORED IN ACCORDANCE WITH THE CITY OF PORT ORCHARD STANDARD SPECIFICATIONS.

15. THE CONTRACTOR SHALL BE RESPONSIBLE FOR PROVIDING ADEQUATE SAFEGUARDS, SAFETY DEVICES, PROTECTIVE EQUIPMENT, FLAGGERS, AND ANY OTHER NEEDED ACTIONS TO PROTECT THE LIFE, HEALTH, AND SAFETY OF THE PUBLIC, AND TO PROTECT PROPERTY IN CONNECTION WITH THE PERFORMANCE OF WORK COVERED BY THE CONTRACTOR. ANY WORK WITHIN THE TRAVELED RIGHTOF-WAY THAT MAY INTERRUPT NORMAL TRAFFIC FLOW SHALL REQUIRE AT LEAST ONE FLAGGER FOR EACH LANE OF TRAFFIC AFFECTED. REFER TO "TRAFFIC CONTROL," OF THE WSDOT STANDARD SPECIFICATIONS SHALL APPLY IN ITS ENTIRETY. TRAFFIC CONTROL PLANS SHALL FOLLOW THE CURRENTLY ADOPTED MUTCD MANUAL AS APPLICABLE. TO PROTECT SIGNIFICANT TREES FROM THE IMPACTS OF THE PROPOSED DEVELOPMENT, THE APPLICANT SHALL PROVIDE THE BEST PROTECTION FOR SIGNIFICANT TREES PER THE REGULATIONS. AT A MINIMUM, ANY SIGNIFICANT TREES TO BE RETAINED SHALL BE FENCED TWO FEET OUTWARD FROM THE IDENTIFIED DRIP LINE. TREES THAT SUSTAIN DAMAGE DURING CONSTRUCTION SHALL BEREPLACED PURSUANT TO POMC. A REPRESENTATIVE OF THE CITY OF PORT ORCHARD DCD STAFF SHALL VERIFY PROTECTIVE FENCING PLACEMENT PER THIS CONDITION PRIOR TO ISSUANCE OF A NOTICE TO PROCEED FOR GRADING AND CLEARING. THE CITY SHALL INSPECT FOR COMPLIANCE WITH THE TREE PLAN PRIOR TO A FINAL INSPECTION. THE INSPECTION SHALL ALSO EVALUATE THE CONDITION OF RETAINED TREES AND ANY AND ALL CORRECTIONS WILL BE REQUIRED TO BE COMPLETED PRIOR TO A FINAL INSPECTION AND RELEASE OF ANY POST FINANCIAL GUARANTEES FOR THE SITE.

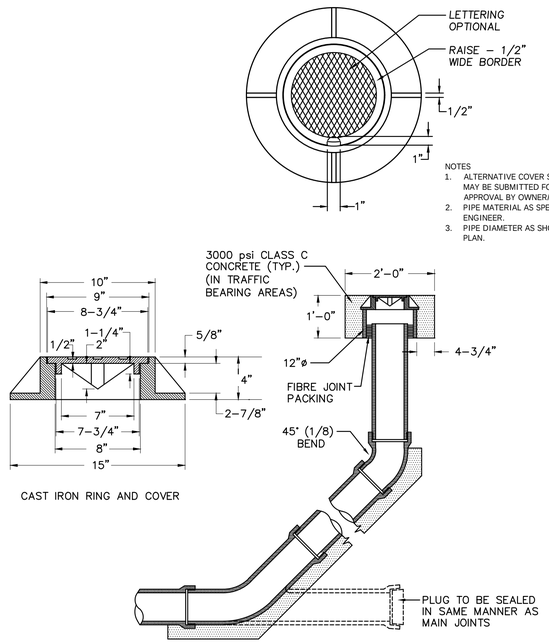

1 ROOF DRAIN CLEANOUT (RDCO)

NOT TO SCALE

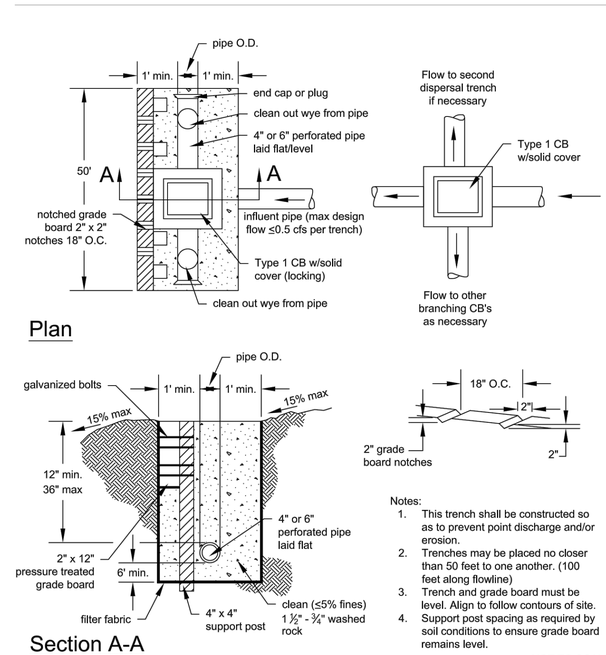

2 DISPERSION TRENCH (WITH NOTCHED BOARD)

NOT TO SCALE — WASHINGTON DEPARTMENT OF ECOLOGY FIGURE V-4.5

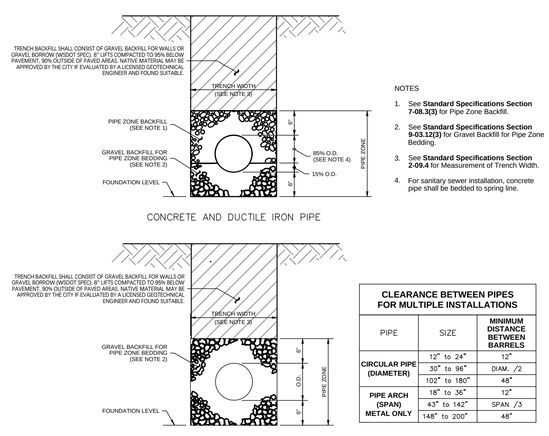

NOTES

1. See **Standard Specifications Section 7-08.3(3)** for Pipe Zone Backfill.
2. See **Standard Specifications Section 9-03.12(3)** for Gravel Backfill for Pipe Zone Bedding.
3. See **Standard Specifications Section 2-09.4** for Measurement of Trench Width.
4. For sanitary sewer installation, concrete pipe shall be bedded to spring line.

CLEARANCE BETWEEN PIPES FOR MULTIPLE INSTALLATIONS

PIPE	SIZE	MINIMUM DISTANCE BETWEEN BARRELS
CIRCULAR PIPE (DIAMETER)	12" to 24"	12"
	30" to 96"	DIAM. /2
	102" to 180"	48"
PIPE ARCH (SPAN) METAL ONLY	18" to 36"	12"
	43" to 142"	SPAN /3
	148" to 200"	48"

3 PIPE ZONE BEDDING AND BACKFILL

NOT TO SCALE — WSDOT STD PLAN B-55.20-02

CALL 811 AT LEAST 48 HOURS BEFORE YOU DIG

VERIFICATION NOTE

ALL EXISTING UTILITIES IN THE CONSTRUCTION AREA SHALL BE IDENTIFIED AND VERIFIED FOR DEPTH AND LOCATION PRIOR TO ANY CONSTRUCTION ACTIVITIES SO TO IDENTIFY ANY POTENTIAL CONFLICTS WITH PROPOSED CONSTRUCTION. CONTACT PROJECT ENGINEER IMMEDIATELY IF ANY CONFLICTS ARE IDENTIFIED.

PRIOR TO ANY CONSTRUCTION ACTIVITIES, VERIFY EXISTING TOPOGRAPHY IS CONSISTENT WITH WHAT IS SHOWN ON PLANS AND IF THERE ARE ANY POTENTIAL CONFLICTS WITH PROPOSED CONSTRUCTION ACTIVITIES. CONTACT PROJECT ENGINEER IMMEDIATELY IF ANY CONFLICTS ARE IDENTIFIED.

REVISION	DESCRIPTION	DATE	BY

CONTOUR ENGINEERING • LLC
CIVIL ENGINEERS ~ SURVEYORS ~ LAND PLANNERS
Phone: 253-857-5454 ~ Fax: 253-509-0044 ~ info@contourpllc.com
Mailing Address: P.O. Box 949, Gig Harbor, WA 98335
Physical Address: 4706 97th Street NW, Suite 100, Gig Harbor, WA 98332

JEREMY F. HAUG — STATE OF WASHINGTON — REGISTERED PROFESSIONAL ENGINEER

29 July 2024

SHEET TITLE: NOTES AND DETAILS

MCCORMICK WOODS DIVISION 4 NORTH PARK

CLIENT: McCORMICK COMMUNITIES LLC
805 KIRKLAND AVE, SUITE 200
KIRKLAND, WA 98033

CONTACT: GREG KRABBE

PHONE: (425) 750-8400

DESIGNER: M. GOULARTE
ENGINEER: J. HAUG
DRAWN: L. BESLER
S4&5 T23 N R01E WM
DATE: 2024.07.29
REVISED:

PROJECT: 24-118
DWG NAME: 24-118-C

SHEET	REV.
C8	
8 OF 9	

MCCORMICK WOODS DIVISION 4 NORTH PARK

A PORTION OF SECTION 4 & 5, TOWNSHIP 23N, RANGE 01 E, W.M., CITY OF PORT ORCHARD, KITSAP COUNTY, WASHINGTON

NOTES AND DETAILS

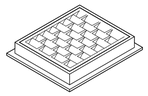

FRAME AND VANED GRATE

PIPE ALLOWANCES	
PIPE MATERIAL	**MAXIMUM INSIDE DIAMETER**
REINFORCED OR PLAIN CONCRETE	12"
ALL METAL PIPE	15"
CPSSP ✳ **(STD. SPEC. 9-05.20)**	12"
SOLID WALL PVC **(STD. SPEC. 9-05.12(1))**	15"
PROFILE WALL PVC **(STD. SPEC. 9-05.12(2))**	15"

✳ CORRUGATED POLYETHYLENE STORM SEWER PIPE

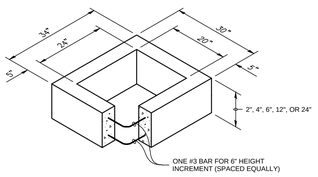

RECTANGULAR ADJUSTMENT SECTION

NOTES

1. As acceptable alternatives to the rebar shown in the PRECAST BASE SECTION, fibers (placed according to the Standard Specifications), or wire mesh having a minimum area of 0.12 square inches per foot shall be used with the minimum required rebar shown in the ALTERNATIVE PRECAST BASE SECTION. Wire mesh shall not be placed in the knockouts.
2. The knockout diameter shall not be greater than 20". Knockouts shall have a wall thickness of 2" minimum to 2.5" maximum. Provide a 1.5" minimum gap between the knockout wall and the outside of the pipe. After the pipe is installed, fill the gap with joint mortar in accordance with Standard Specification 9-04.3.
3. The maximum depth from the finished grade to the lowest pipe invert shall be 5'.
4. The frame and grate may be installed with the flange down, or integrally cast into the adjustment section with flange up.
5. The Precast Base Section may have a rounded floor, and the walls may be sloped at a rate of 1:24 or steeper.
6. The opening shall be measured at the top of the Precast Base Section.
7. All pickup holes shall be grouted full after the basin has been placed.

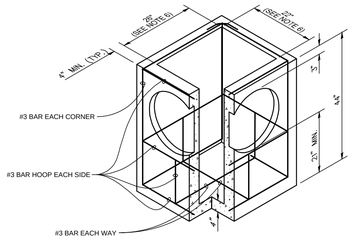

PRECAST BASE SECTION

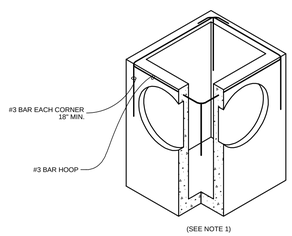

ALTERNATIVE PRECAST BASE SECTION

1 CATCH BASIN TYPE 1

NOT TO SCALE — WSDOT B-5.20-01

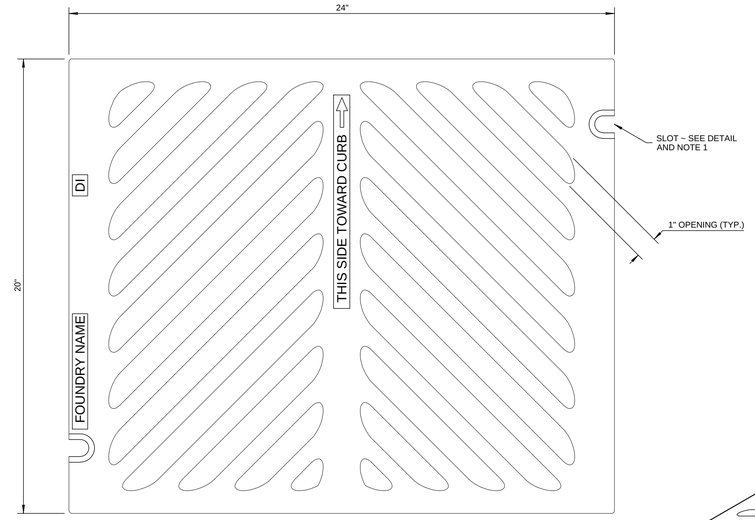

TOP

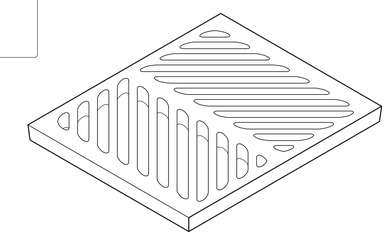

ISOMETRIC

2 RECTANGULAR HERRINGBONE GRATE

NOT TO SCALE — WSDOT B-30.50-01

NOTES

1. Bolt-down capability is required on all frames, grates, and covers, unless specified otherwise in the Contract. Provide 2 holes in the frame that are vertically aligned with the grate or cover slots. The frame shall accept the 5/8" - 11 NC × 2" Allen head cap screw by being tapped, or other approved mechanism. Location of bolt-down holes varies by manufacturer.
2. Refer to **Standard Specification 9-05.15(2)** for additional requirements.
3. For frame details, see **Standard Plan B-30.10**.
4. The thickness of the grate shall not exceed 1 5/8".

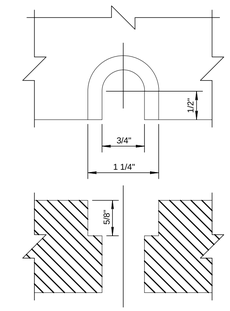

BOLT–DOWN SLOT DETAIL
SEE NOTE 1

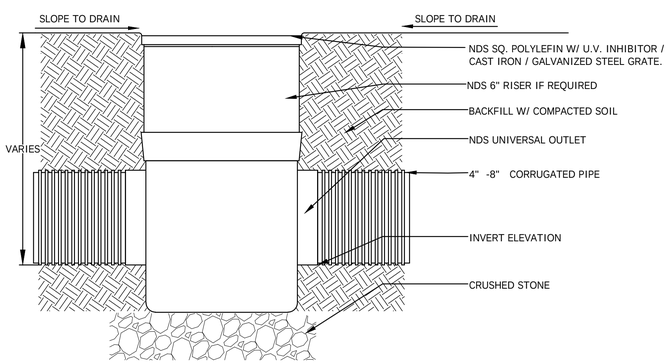

3 YARD DRAIN (NDS SQUARE CB W/ GRATE) (OR APPROVED EQUIVALENT)

NOT TO SCALE

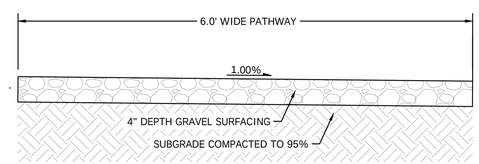

4 GRAVEL SURFACING SECTION

NOT TO SCALE

CALL 811 AT LEAST 48 HOURS BEFORE YOU DIG

VERIFICATION NOTE

ALL EXISTING UTILITIES IN THE CONSTRUCTION AREA SHALL BE IDENTIFIED AND VERIFIED FOR DEPTH AND LOCATION PRIOR TO ANY CONSTRUCTION ACTIVITIES SO TO IDENTIFY ANY POTENTIAL CONFLICTS WITH PROPOSED CONSTRUCTION. CONTACT PROJECT ENGINEER IMMEDIATELY IF ANY CONFLICTS ARE IDENTIFIED.

PRIOR TO ANY CONSTRUCTION ACTIVITIES, VERIFY EXISTING TOPOGRAPHY IS CONSISTENT WITH WHAT IS SHOWN ON PLANS AND IF THERE ARE ANY POTENTIAL CONFLICTS WITH PROPOSED CONSTRUCTION ACTIVITIES. CONTACT PROJECT ENGINEER IMMEDIATELY IF ANY CONFLICTS ARE IDENTIFIED.

REVISION	DESCRIPTION	DATE	BY

CONTOUR ENGINEERING • LLC
CIVIL ENGINEERS ~ SURVEYORS ~ LAND PLANNERS
Phone: 253-857-5454 ~ Fax: 253-509-0044 ~ info@contourpllc.com
Mailing Address: P.O. Box 949, Gig Harbor, WA 98335
Physical Address: 4706 97th Street NW, Suite 100, Gig Harbor, WA 98332

JEREMY F. HAUG — STATE OF WASHINGTON — 40700 — REGISTERED PROFESSIONAL ENGINEER

29 July 2024

SHEET TITLE: NOTES AND DETAILS

MCCORMICK WOODS DIVISION 4 NORTH PARK

CLIENT: McCORMICK COMMUNITIES, LLC
805 KIRKLAND AVE. SUITE 200
KIRKLAND, WA 98033

CONTACT: GREG KRABBE
PHONE: (425) 750-8400

DESIGNER: M. GOULARTE
ENGINEER: J. HAUG
DRAWN: L. BESLER
S4&5 T23 N R01E WM
DATE: 2024.07.29
REVISED:

PROJECT: 24-118
DWG NAME: 24-118-C

SHEET	REV.
C9	△
9 OF 9	