REQUEST FOR QUALIFICATIONS (RFQ)
for
Construction Inspection Services
for the
Freitas and Las Gallinas Intersection Improvement Project

January 13, 2017

Introduction

The City of San Rafael's Public Works Department (City) hereby requests Statements of Qualifications (Statements) from qualified consultants for construction inspection services for the Freitas and Las Gallinas Intersection Improvement Project. Statements shall be submitted by firms that have a capable and demonstrable background in the type of work described in the section entitled "Scope of Work" of this notice. In addition, all interested firms shall have sufficient, readily available resources, in the form of trained personnel, support services, specialized consultants and financial resources, to carry out the work without delay or shortcomings.

The City's construction inspection consultant shall be able to provide/meet the following minimum requirements and qualifications:

1. Knowledge of current Caltrans Standard Plans and Standard Specifications.
2. Knowledge of the County of Marin Uniform Construction Standards.
3. Ability to read and interpret plans and specifications.
4. Ability to work with a computer or tablet (knowledge of Microsoft Office).
5. Ability to conduct business as a representative of the City of San Rafael.

Interested consultants are invited to submit qualifications in accordance with the requirements of this Request for Qualifications (RFQ). **The Statements shall be submitted via email to Stephanie Gindlesperger (Stephanie.Gindlesperger@cityofsanrafael.org), no later than 2:00 PM on February 7, 2017.**

Background

Public Works staff has analyzed the intersection of Manuel T. Freitas Parkway and Las Gallinas Avenue and recommended it for intersection improvements and modifications.

This intersection currently experiences excessive delay from several of its approaches. The high number of vehicle trips from US 101 to Terra Linda High School, Vallecito Elementary School, Kaiser Hospital Emergency Room, as well as nearby residential and commercial areas causes the queue on westbound Manuel T. Freitas Parkway to extend beyond the available turn pocket for much of the day. In addition, due to the current geometry of the intersection, the eastbound and westbound protected left turn phases are unable to operate simultaneously and must utilize a lead/lag operation further adding to delay and intersection congestion.

Scope of Work

The City's construction inspection consultant shall be able to provide construction inspection services including, but not limited to, the following:

1. Review plans, specifications, and other contract and construction-related documents. Become familiar with traffic control plans, construction schedules, construction sequences, and permit requirements from other agencies.
2. Attend pre-construction meetings and present concerns, if any.
3. Interpret plans, specifications, and regulations and ensure that the contractor is following its contract. Provide daily inspections to ensure the project is constructed according to contract documents. The level of effort for daily inspections shall be coordinated with the RE.
4. Notify the Resident Engineer (RE) about non-compliance and assist the RE in correcting compliance problems with the contractor as soon as they are discovered.
5. Prepare and maintain daily diaries showing site and weather conditions, traffic control measures, stormwater management, labor, equipment, and materials used, quantity of work performed, and major incidents/safety violations. Daily diaries shall be submitted to the RE on a daily basis and shall include photos.
6. Review construction progress schedules on a regular basis, verify schedules are on track with project milestones, identify deviations, and ensure that corrective actions are taken to bring projects back on schedule.
7. Provide accurate measurements of work completed by contractors in accordance with contract documents for the preparation of progress payments.
8. Review and evaluate proposed change orders and/or estimates for reasonableness and cost effectiveness, and provide recommendations to the RE.
9. Monitor contractor's compliance with the established safety program and response to deficiencies and hazards, and investigate and report on accidents.
10. Review soil compaction and material testing certifications of compliance (COC). Coordinate with the City's on-call material sampling and testing consultant.
11. Ensure contractors do not install materials without approved material testing certifications. Any failed tests shall be reported to the RE.
12. Attend weekly progress meetings, when invited, to communicate, coordinate, and resolve any issues that may arise at the job site.
13. Conduct field construction employee interviews, as directed by the RE, to comply with Equal Employment Opportunity Law and David Bacon Act. Interviews shall be provided to the RE.
14. Prepare project punch list with RE.
15. Upon project completion, conduct final inspection with RE.
16. Review contractor's certified payroll for compliance with applicable minimum wage rates.
17. Review contractor submittals and RFIs as needed.

Anticipated Schedule

o Advertise RFQ	January 13, 2017
o Statement Submittal Deadline	2:00 PM, February 7, 2017
o Select Consultant	February 7-9, 2017 (subject to change)

Statement of Qualifications (Statement) Requirements

The Statement shall consist of one (1) electronic PDF copy of the Statement which is no more than 10 pages long, including a cover sheet, resumes, fee schedule, etc. Submittal of a Statement is acceptance of the City's standard Professional Services Agreement. At a minimum, the Statement shall include:

1. Cover letter signed by the person authorized to negotiate a contract for the proposed services with the City on behalf of the Statement team. Cover letter must indicate that the City's standard Professional Services Agreement form is acceptable to the consultant.
2. Experience and Technical Competence – The consultant shall describe his or her experience in completing similar consulting efforts. List in reverse chronological order for the last four years projects completed or under design for which your firm provided construction inspection services. Name of clients, project managers, telephone numbers, type of work performed, and the value of the consulting contracts shall be included. Projects currently being performed may be submitted for the City's review.
3. Project Organization and Key Personnel
    a. The Statement must include a discussion of consultant's staffing plans and level of personnel to be involved, their qualification, experience, resumes, roles, and the name of the individual who will be in overall charge and responsibility for coordination with the City.
    b. Identify proposed sub-consultants (if any) that will be retained to perform specified items of work listed in the Scope of Services.
4. Schedule of Fees
    a. The Statement must include a "Schedule of Fees" which lists each personnel classification that will work on the project and the hourly rate charged for each classification. The hourly rates incorporated into the Professional Services Agreement will be in effect for the entire duration of the contract, with an optional provision to adjust the rates once annually for inflation. The consultant shall initiate the rate adjustment process by submitting a proposed adjusted fee schedule to the City for review and approval.

Method of Payment

The method of payment to the selected firm shall be on a time-and-material basis with a yet to be determined cumulative, maximum not-to-exceed contract limit. This amount shall include direct costs, including labor, overhead, profit, and expenses, including transportation, communications, subsistence, materials, and any subcontracted items of work. Progress payments will be based on actual hours and contract hourly rates charged to a particular task on a monthly basis.

The Schedule of Fees shall be submitted with the Statement in a separate PDF file in the same email as the Statement. Inclusion of the Schedule of Fees in the Statement is grounds for rejection of the Statement.

Submittal Requirements

- Statements must be received no later than **2:00 PM, local time, on February 7, 2017**, **via email** to **Stephanie Gindlesperger (Stephanie.Gindlesperger@cityofsanrafael.org)**
- Statements and/or modifications to Statements received after the hour and date specified above will be rejected and returned unopened to the proposer.
- All Statements shall be submitted according to the specifications set forth in this RFQ. Failure to adhere to these specifications may be cause for rejection.
- Once submitted, Statements, including the composition of the consulting staff, shall not be changed without prior written consent.
- All requests for clarification for this RFQ must be made in writing via email. The City will only respond to written questions from consultants. The City cannot respond to verbal questions submitted by telephone or in person. All addenda will be posted on the City's Website. By submitting a Statement, the proposer affirms that they are aware of any addenda and have prepared their Statement accordingly. No allowances will be made for a proposer's failure to inform themselves of addenda content. A link to the addenda may be accessed at http://www.cityofsanrafael.org/pubworks-proj-current/.

Pre-Submittal Activities

- All questions relating to the RFQ shall be presented in writing (email) at least 96 hours prior at **Stephanie Gindlesperger (Stephanie.Gindlesperger@cityofsanrafael.org**
- The City reserves the right to revise the RFQ prior to the indicated due date. The City may consider extending the due date for RFQ due to significant revisions to Scope of Services.

Consultant Nominating and Selection Process

- A Consultant Selection Committee will be established for this project. Each member of the committee will evaluate each submitted Statement.
- Based on qualifications provided in Statements, the committee will rank the consultants. The top-ranked firm will be the selected firm.
- After negotiating a proposed agreement that is fair and reasonable, the Public Works Director will recommend to the City Council the approval of the agreement. Final authority to approve the agreement rests with the City Council.

Evaluation Criteria

Ranking of the Statements will be based on the following point system (100 points maximum):

- Inclusion of all required items and completeness of the Statement (5 points)
- Project Understanding (25 points)
    a. Comprehension of the Scope of Services
- Previous experience of similar projects completed on time and within budget (35 points)
    a. Relevant technical experience
    b. Relevant projects completed
    c. City's prior experience with the consultant
- Project Team and Staffing Qualifications (25 points)
    a. A combination of experience, education, and background in undertaking similar type projects
- Local Sensitivity (10 points)
    a. Governmental and regulatory agency familiarity
    b. Knowledge of the local area

Special Conditions

- Reservations

  This RFQ does not commit the City to award a contract, to defray any costs incurred in the preparation of a Statement pursuant to this RFQ, or to procure or contract for work.

- Financial Management and Accounting System Requirements

  No consultant contract will be awarded to a consulting firm who does not possess an adequate financial management and accounting system as required by 48 CFR Part 16.301-3, 49 CFR Part 18, and 48 CFR Part 31.

- RFQ as a Public Record

  All Statements submitted in response to this RFQ become the property of the City and thus become public records and, as such, may be subject to public review.

- Right to Cancel

  The City reserves the right to cancel or change, for any or no reason, in part or in its entirety, this RFQ, including but not limited to: selection schedule, submittal date, and submittal requirements.

- Additional Information

  The City reserves the right to request additional information and/or clarification from any or all respondents to this RFQ.

- Public Information

  Consultants who wish to release information regarding the consultant selection process, contract award, or data provided by the City at any Public Hearing, must receive prior written approval from the City before disclosing such information to the public.

- Contract for Professional Services

  The selected consultant will be required to sign the Professional Services Agreement, Attachment 1, and all other required certifications and documentation within fifteen (15) working days of the City Council awarding the contract.

- Conflict of Interest

  The City has established a policy concerning potential conflict of interest in program management, design, and construction. This policy applies to all proposers and their proposed consultants/sub-consultants. See the sample Professional Services Agreement for additional information.

- Insurance Requirements

  The City requires consultants doing business with it to obtain insurance, as described in the Professional Services Agreement. The required insurance certificates must comply with all requirements of the standards as described in the contract and must be provided with the executed Professional Services Agreement.

Attachments

1. Sample San Rafael Professional Services Agreement Template *(for informational purposes only and subject to changes by the City Attorney's office only. No consultant changes will be allowed)*
2. Plans

Thank you for your interest in contracting opportunities with the City of San Rafael.

Sincerely,

Jeffrey Stutsman , PE
Associate Civil Engineer

AGREEMENT FOR PROFESSIONAL SERVICES WITH
[NAME OF CONSULTANT]
FOR CONSTRUCTION INSPECTION SERVICES

This Agreement is made and entered into this _____ day of _____, 2016, by and between the **CITY OF SAN RAFAEL** (hereinafter "**CITY**"), and **[NAME OF CONSULTANT]** (hereinafter "**CONTRACTOR**").

RECITALS

WHEREAS, the **CITY** has determined that additional construction inspection services are required; and

WHEREAS, the **CONTRACTOR** has agreed to render such services.

AGREEMENT

NOW, THEREFORE, the parties hereby agree as follows:

1. PROJECT COORDINATION.

A. **CITY'S Project Manager.** The Director of Public Works is hereby designated the PROJECT MANAGER for the **CITY**, and said PROJECT MANAGER shall supervise all aspects of the progress and execution of this Agreement.

B. **CONTRACTOR'S Project Director. CONTRACTOR** shall assign a single PROJECT DIRECTOR to have overall responsibility for the progress and execution of this Agreement for **CONTRACTOR**. [CONTACT NAME] is hereby designated as the PROJECT DIRECTOR for **CONTRACTOR**. Should circumstances or conditions subsequent to the execution of this Agreement require a substitute PROJECT DIRECTOR, for any reason, the **CONTRACTOR** shall notify the **CITY** within ten (10) business days of the substitution.

2. DUTIES OF CONTRACTOR.

CONTRACTOR shall perform the duties and/or provide the services outlined in the Scope of Services marked as Exhibit "A," attached hereto, and incorporated herein.

3. DUTIES OF CITY.

CITY shall compensate **CONTRACTOR** as provided in Paragraph 4, and shall perform the duties as described in Exhibit "A" attached hereto and incorporated herein.

4. COMPENSATION.

For the full performance of the services described herein by **CONTRACTOR**, **CITY** shall pay **CONTRACTOR** on a time and materials basis for services rendered in accordance with the rates shown on the current fee schedule as described in Exhibit "A" attached and incorporated herein, in an amount not to exceed [COST].

Payment will be made monthly upon receipt by PROJECT MANAGER of itemized invoices submitted by **CONTRACTOR**.

5. TERM OF AGREEMENT.

The term of this Agreement shall commence upon the date of execution of this Agreement and end on [DATE] when the work shall have been completed, unless the parties agree to extend this Agreement for another 90 days, as approved in writing by City Manager.

6. TERMINATION.

A. **Discretionary**. Either party may terminate this Agreement without cause upon thirty (30) days written notice mailed or personally delivered to the other party.

B. **Cause**. Either party may terminate this Agreement for cause upon fifteen (15) days written notice mailed or personally delivered to the other party, and the notified party's failure to cure or correct the cause of the termination, to the reasonable satisfaction of the party giving such notice, within such fifteen (15) day time period.

C. **Effect of Termination**. Upon receipt of notice of termination, neither party shall incur additional obligations under any provision of this Agreement without the prior written consent of the other.

D. **Return of Documents**. Upon termination, any and all **CITY** documents or materials provided to **CONTRACTOR** and any and all of **CONTRACTOR's** documents and materials prepared for or relating to the performance of its duties under this Agreement, shall be delivered to **CITY** as soon as possible, but not later than thirty (30) days after termination.

7. OWNERSHIP OF DOCUMENTS.

The written documents and materials prepared by the **CONTRACTOR** in connection with the performance of its duties under this Agreement, shall be the sole property of **CITY**. **CITY** may use said property for any purpose, including projects not contemplated by this Agreement.

8. INSPECTION AND AUDIT.

Upon reasonable notice, **CONTRACTOR** shall make available to **CITY**, or its agent, for inspection and audit, all documents and materials maintained by **CONTRACTOR** in connection with its performance

of its duties under this Agreement. **CONTRACTOR** shall fully cooperate with **CITY** or its agent in any such audit or inspection.

9. ASSIGNABILITY.

The parties agree that they shall not assign or transfer any interest in this Agreement nor the performance of any of their respective obligations hereunder, without the prior written consent of the other party, and any attempt to so assign this Agreement or any rights, duties or obligations arising hereunder shall be void and of no effect.

10. INSURANCE.

A. Scope of Coverage. During the term of this Agreement, **CONTRACTOR** shall maintain, at no expense to **CITY**, the following insurance policies:

1. A commercial general liability insurance policy in the minimum amount of one million dollars ($1,000,000) per occurrence/two million dollars ($2,000,000) aggregate, for death, bodily injury, personal injury, or property damage.

2. An automobile liability (owned, non-owned, and hired vehicles) insurance policy in the minimum amount of one million dollars ($1,000,000) dollars per occurrence.

3. If any licensed professional performs any of the services required to be performed under this Agreement, a professional liability insurance policy in the minimum amount of two million dollars ($2,000,000) per occurrence/four million dollars ($4,000,000) aggregate, to cover any claims arising out of the **CONTRACTOR's** performance of services under this Agreement. Where **CONTRACTOR** is a professional not required to have a professional license, **CITY** reserves the right to require **CONTRACTOR** to provide professional liability insurance pursuant to this section.

4. If it employs any person, **CONTRACTOR** shall maintain worker's compensation and employer's liability insurance, as required by the State Labor Code and other applicable laws and regulations, and as necessary to protect both **CONTRACTOR** and **CITY** against all liability for injuries to **CONTRACTOR's** officers and employees. **CONTRACTOR's** worker's compensation insurance shall be specifically endorsed to waive any right of subrogation against **CITY**.

B. Other Insurance Requirements. The insurance coverage required of the **CONTRACTOR** in subparagraph A of this section above shall also meet the following requirements:

1. Except for professional liability insurance, the insurance policies shall be specifically endorsed to include the **CITY**, its officers, agents, employees, and volunteers, as additionally named insureds under the policies.

2. The additional insured coverage under **CONTRACTOR'S** insurance policies shall be primary with respect to any insurance or coverage maintained by **CITY** and shall not call upon **CITY's** insurance or self-insurance coverage for any contribution. The "primary and noncontributory" coverage in **CONTRACTOR'S** policies shall be at least as broad as ISO form CG20 01 04 13.

3. Except for professional liability insurance, the insurance policies shall include, in their text or by endorsement, coverage for contractual liability and personal injury.

4. The insurance policies shall be specifically endorsed to provide that the insurance carrier shall not cancel, terminate or otherwise modify the terms and conditions of said insurance policies except upon ten (10) days written notice to the **PROJECT MANAGER**.

5. If the insurance is written on a Claims Made Form, then, following termination of this Agreement, said insurance coverage shall survive for a period of not less than five years.

6. The insurance policies shall provide for a retroactive date of placement coinciding with the effective date of this Agreement.

7. The limits of insurance required in this Agreement may be satisfied by a combination of primary and umbrella or excess insurance. Any umbrella or excess insurance shall contain or be endorsed to contain a provision that such coverage shall also apply on a primary and noncontributory basis for the benefit of **CITY** (if agreed to in a written contract or agreement) before **CITY'S** own insurance or self-insurance shall be called upon to protect it as a named insured.

8. It shall be a requirement under this Agreement that any available insurance proceeds broader than or in excess of the specified minimum insurance coverage requirements and/or limits shall be available to **CITY** or any other additional insured party. Furthermore, the requirements for coverage and limits shall be: (1) the minimum coverage and limits specified in this Agreement; or (2) the broader coverage and maximum limits of coverage of any insurance policy or proceeds available to the named insured; whichever is greater.

C. Deductibles and SIR's. Any deductibles or self-insured retentions in C**ONTRACTOR's** insurance policies must be declared to and approved by the **PROJECT MANAGER** and City Attorney, and shall not reduce the limits of liability. Policies containing any self-insured retention (SIR) provision shall provide or be endorsed to provide that the SIR may be satisfied by either the named insured or **CITY** or other additional insured party. At **CITY's** option, the deductibles or self-insured retentions with respect to **CITY** shall be reduced or eliminated to **CITY's** satisfaction, or **CONTRACTOR** shall procure a bond guaranteeing payment of losses and related investigations, claims administration, attorney's fees and defense expenses.

D. Proof of Insurance. **CONTRACTOR** shall provide to the **PROJECT MANAGER** or **CITY'S** City Attorney all of the following: (1) Certificates of Insurance evidencing the insurance coverage

required in this Agreement; (2) a copy of the policy declaration page and/or endorsement page listing all policy endorsements for the commercial general liability policy, and (3) excerpts of policy language or specific endorsements evidencing the other insurance requirements set forth in this Agreement. **CITY** reserves the right to obtain a full certified copy of any insurance policy and endorsements from **CONTRACTOR**. Failure to exercise this right shall not constitute a waiver of the right to exercise it later. The insurance shall be approved as to form and sufficiency by **PROJECT MANAGER** and the City Attorney.

11. INDEMNIFICATION.

A. Except as otherwise provided in Paragraph B., **CONTRACTOR** shall, to the fullest extent permitted by law, indemnify, release, defend with counsel approved by **CITY**, and hold harmless **CITY**, its officers, agents, employees and volunteers (collectively, the "**City Indemnitees**"), from and against any claim, demand, suit, judgment, loss, liability or expense of any kind, including but not limited to attorney's fees, expert fees and all other costs and fees of litigation, (collectively "CLAIMS"), arising out of **CONTRACTOR'S** performance of its obligations or conduct of its operations under this Agreement. The **CONTRACTOR**'s obligations apply regardless of whether or not a liability is caused or contributed to by the active or passive negligence of the **City Indemnitees**. However, to the extent that liability is caused by the active negligence or willful misconduct of the **City Indemnitees**, the **CONTRACTOR**'s indemnification obligation shall be reduced in proportion to the **City Indemnitees'** share of liability for the active negligence or willful misconduct. In addition, the acceptance or approval of the **CONTRACTOR**'s work or work product by the **CITY** or any of its directors, officers or employees shall not relieve or reduce the **CONTRACTOR**'s indemnification obligations. In the event the **City Indemnitees** are made a party to any action, lawsuit, or other adversarial proceeding arising from **CONTRACTOR'S** performance of or operations under this Agreement, **CONTRACTOR** shall provide a defense to the **City Indemnitees** or at **CITY'S** option reimburse the **City Indemnitees** their costs of defense, including reasonable attorneys' fees, incurred in defense of such claims.

B. Where the services to be provided by **CONTRACTOR** under this Agreement are design professional services to be performed by a design professional as that term is defined under Civil Code Section 2782.8, **CONTRACTOR** shall, to the fullest extent permitted by law, indemnify, release, defend and hold harmless the **City Indemnitees** from and against any CLAIMS that arise out of, pertain to, or relate to the negligence, recklessness, or willful misconduct of **CONTRACTOR** in the performance of its duties and obligations under this Agreement or its failure to comply with any of its obligations contained in this Agreement, except such CLAIM which is caused by the sole negligence or willful misconduct of **CITY**.

C. The defense and indemnification obligations of this Agreement are undertaken in addition to, and shall not in any way be limited by, the insurance obligations contained in this Agreement,

and shall survive the termination or completion of this Agreement for the full period of time allowed by law.

12. NONDISCRIMINATION.

CONTRACTOR shall not discriminate, in any way, against any person on the basis of age, sex, race, color, religion, ancestry, national origin or disability in connection with or related to the performance of its duties and obligations under this Agreement.

13. COMPLIANCE WITH ALL LAWS.

CONTRACTOR shall observe and comply with all applicable federal, state and local laws, ordinances, codes and regulations, in the performance of its duties and obligations under this Agreement. **CONTRACTOR** shall perform all services under this Agreement in accordance with these laws, ordinances, codes and regulations. **CONTRACTOR** shall release, defend, indemnify and hold harmless **CITY**, its officers, agents and employees from any and all damages, liabilities, penalties, fines and all other consequences from any noncompliance or violation of any laws, ordinances, codes or regulations.

14. NO THIRD PARTY BENEFICIARIES.

CITY and **CONTRACTOR** do not intend, by any provision of this Agreement, to create in any third party, any benefit or right owed by one party, under the terms and conditions of this Agreement, to the other party.

15. NOTICES.

All notices and other communications required or permitted to be given under this Agreement, including any notice of change of address, shall be in writing and given by personal delivery, or deposited with the United States Postal Service, postage prepaid, addressed to the parties intended to be notified. Notice shall be deemed given as of the date of personal delivery, or if mailed, upon the date of deposit with the United States Postal Service. Notice shall be given as follows:

TO **CITY'**s Project Manager:

Dean Allison
Director of Public Works
City of San Rafael
111 Morphew Street
San Rafael, CA 94901

TO **CONTRACTOR**'s Project Director:

[CONTACT NAME]
[CONSULTANT]
[ADDRESS]

16. INDEPENDENT CONTRACTOR.

For the purposes, and for the duration, of this Agreement, **CONTRACTOR**, its officers, agents and employees shall act in the capacity of an Independent Contractor, and not as employees of the **CITY**. **CONTRACTOR** and **CITY** expressly intend and agree that the status of **CONTRACTOR**, its officers, agents and employees be that of an Independent Contractor and not that of an employee of **CITY**.

17. ENTIRE AGREEMENT -- AMENDMENTS.

A. The terms and conditions of this Agreement, all exhibits attached, and all documents expressly incorporated by reference, represent the entire Agreement of the parties with respect to the subject matter of this Agreement.

B. This written Agreement shall supersede any and all prior agreements, oral or written, regarding the subject matter between the **CONTRACTOR** and the **CITY**.

C. No other agreement, promise or statement, written or oral, relating to the subject matter of this Agreement, shall be valid or binding, except by way of a written amendment to this Agreement.

D. The terms and conditions of this Agreement shall not be altered or modified except by a written amendment to this Agreement signed by the **CONTRACTOR** and the **CITY**.

E. If any conflicts arise between the terms and conditions of this Agreement, and the terms and conditions of the attached exhibits or the documents expressly incorporated by reference, the terms and conditions of this Agreement shall control.

18. SET-OFF AGAINST DEBTS.

CONTRACTOR agrees that **CITY** may deduct from any payment due to **CONTRACTOR** under this Agreement, any monies which **CONTRACTOR** owes **CITY** under any ordinance, agreement, contract or resolution for any unpaid taxes, fees, licenses, assessments, unpaid checks or other amounts.

19. WAIVERS.

The waiver by either party of any breach or violation of any term, covenant or condition of this Agreement, or of any ordinance, law or regulation, shall not be deemed to be a waiver of any other term, covenant, condition, ordinance, law or regulation, or of any subsequent breach or violation of the same or other term, covenant, condition, ordinance, law or regulation. The subsequent acceptance by either party of any fee, performance, or other consideration which may become due or owing under this Agreement, shall not be deemed to be a waiver of any preceding breach or violation by the other party of any term, condition, covenant of this Agreement or any applicable law, ordinance or regulation.

20. COSTS AND ATTORNEY'S FEES.

The prevailing party in any action brought to enforce the terms and conditions of this Agreement, or arising out of the performance of this Agreement, may recover its reasonable costs (including claims administration) and attorney's fees expended in connection with such action.

21. CITY BUSINESS LICENSE / OTHER TAXES.

CONTRACTOR shall obtain and maintain during the duration of this Agreement, a **CITY** business license as required by the San Rafael Municipal Code **CONTRACTOR** shall pay any and all state and federal taxes and any other applicable taxes. **CITY** shall not be required to pay for any work performed under this Agreement, until **CONTRACTOR** has provided **CITY** with a completed Internal Revenue Service Form W-9 (Request for Taxpayer Identification Number and Certification).

22. APPLICABLE LAW.

The laws of the State of California shall govern this Agreement.

IN WITNESS WHEREOF, the parties have executed this Agreement as of the day, month and year first above written.

CITY OF SAN RAFAEL

_____
JIM SCHUTZ, City Manager

CONTRACTOR

By:_____

Name:_____

Title:_____

ATTEST:

_____
ESTHER C. BEIRNE, City Clerk

APPROVED AS TO FORM:

_____
ROBERT F. EPSTEIN, City Attorney

MANUEL T. FREITAS PKWY
AND
LAS GALLINAS AVE INTERSECTION
IMPROVEMENT PROJECT

SAN RAFAEL, CALIFORNIA

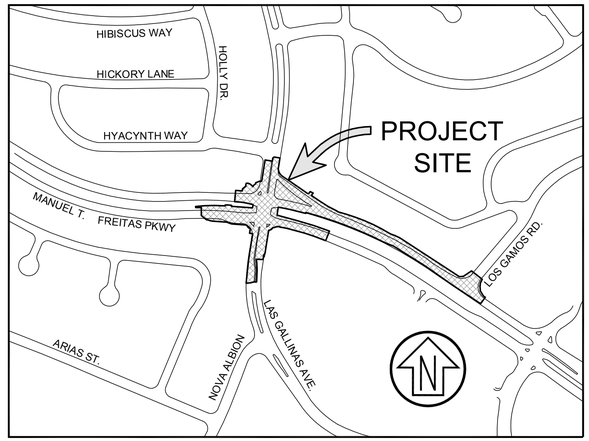

VICINITY MAP
SCALE: NTS

GENERAL NOTES:

1. WORK SHOWN HEREON SHALL BE DONE IN ACCORDANCE WITH THE COUNTY OF MARIN STANDARD CONSTRUCTION PLANS AND SPECIFICATIONS, LATEST EDITION, THE STANDARD SPECIFICATIONS FOR THE STATE OF CALIFORNIA DEPARTMENT OF TRANSPORTATION, LATEST EDITION,AND THE APPLICABLE UTILITY AGENCY STANDARD PLANS AND SPECIFICATIONS, LATEST EDITION.
2. THE CONTRACTOR SHALL ASSUME SOLE AND COMPLETE RESPONSIBILITY FOR THE JOB SITE CONDITIONS, INCLUDING SAFETY OF ALL PERSONS AND PROPERTY, DURING THE COURSE OF CONSTRUCTION OF THIS PROJECT. THIS REQUIREMENT SHALL APPLY CONTINUOUSLY, AND SHALL NOT BE LIMITED TO NORMAL WORKING HOURS. THE CONTRACTOR FURTHER AGREES TO HOLD DESIGN PROFESSIONAL HARMLESS FROM ANY AND ALL LIABILITY, REAL OR ALLEGED, IN CONNECTION WITH THE PERFORMANCE OF WORK ON THIS PROJECT, EXCEPTING LIABILITY ARISING FROM THE SOLE NEGLIGENCE OF THE DESIGN PROFESSIONAL.
3. CONTRACTOR SHALL HOLD HARMLESS THE CITY OF SAN RAFAEL AND ITS AUTHORIZED REPRESENTATIVES FROM ALL LIABILITIES AND DAMAGES RESULTING FROM HIS CONSTRUCTION OPERATIONS.
4. PRIOR TO COMMENCING CONSTRUCTION OPERATIONS, THE CONTRACTOR SHALL VERIFY ALL INTERFACES BETWEEN EXISTING CONDITIONS AND NEW CONSTRUCTION FOR GRADING, DRAINAGE, UNDERGROUND, AND OVERHEAD FACILITIES, INCLUDING LOCATION AND ELEVATION OF EXISTING UNDERGROUND OR AT GRADE FACILITIES AT CROSSINGS WITH PROPOSED UNDERGROUND FACILITIES. IF CONDITIONS DIFFER FROM THOSE SHOWN ON THE PLANS, THE CONTRACTOR SHALL NOTIFY THE ENGINEER AND SHALL NOT BEGIN CONSTRUCTION OPERATIONS UNTIL THE CHANGED CONDITIONS HAVE BEEN EVALUATED.
5. THE CONTRACTOR SHALL BE RESPONSIBLE FOR THE REVIEW AND COORDINATION OF ALL CONTRACT DOCUMENTS PRIOR TO THE START OF CONSTRUCTION. ANY DISCREPANCIES THAT OCCUR SHALL BE BROUGHT TO THE ATTENTION OF THE ENGINEER PRIOR TO THE START OF CONSTRUCTION SO THAT A CLARIFICATION CAN BE ISSUED. ANY WORK PERFORMED IN CONFLICT WITH THE CONTRACT DOCUMENTS SHALL BE CORRECTED BY THE CONTRACTOR AT THEIR OWN EXPENSE.
6. THE ENGINEER PREPARING THESE PLANS WILL NOT BE RESPONSIBLE FOR, OR LIABLE FOR, UNAUTHORIZED CHANGES TO OR USES OF THESE PLANS. ALL CHANGES TO THE PLANS MUST BE IN WRITING AND MUST BE APPROVED BY THE ENGINEER.
7. NOTES AND DETAILS ON DRAWINGS SHALL TAKE PRECEDENCE OVER GENERAL NOTES AND TYPICAL DETAILS. WHERE NO DETAILS ARE GIVEN, CONSTRUCTION SHALL BE AS SHOWN FOR SIMILAR WORK.
8. ALL EASEMENTS OR OTHER ENCUMBRANCES SHOWN OR REFERENCED IN THESE PLANS OR DISCLOSED IN THE TITLE REPORT ARE SUBJECT TO INHERENT OR EXPLICIT RESTRICTIONS. THE CONTRACTOR IS RESPONSIBLE FOR DETERMINING THE IMPACT OF THESE RESTRICTIONS.
9. THE CONTRACTOR SHALL OBTAIN ALL NECESSARY PERMITS FROM THE TOWN OF SAN RAFAEL AND APPROPRIATE JURISDICTIONAL AGENCIES FOR DISCHARGE OF GROUNDWATER THAT MAY BE NECESSARY TO ACCOMPLISH WORK SHOWN ON THESE PLANS.
10. WATER SHALL BE USED TO CONTROL DUST DURING CONSTRUCTION OPERATIONS.
11. OUTDOOR NOISE-GENERATING CONSTRUCTION ACTIVITIES (INCLUDING BUT NOT LIMITED TO RAPID IMPACT COMPACTION (RIC) GRADING, TRENCHING, CONCRETE PLACEMENT, SAWING AND HAMMERING) SHALL BE LIMITED TO THE HOURS BETWEEN 8 AM. AND 5PM, MONDAY THROUGH FRIDAY. FOR QUESTIONS REGARDING CONSTRUCTION HOURS AND/OR RELATED NOISE, PLEASE CONTACT THE ENGINEER.
12. THE CONTRACTOR SHALL NOTIFY THE GEOTECHNICAL ENGINEER 48 HOURS PRIOR TO COMMENCING WORK. THE GEOTECHNICAL ENGINEER SHALL OBSERVE CONSTRUCTION TO VERIFY THAT EXISTING AND INSTALLED CONDITIONS ARE CONSISTENT WITH THE GEOTECHNICAL REPORT.
13. IF, AT ANY TIME DURING GRADING OPERATIONS, ANY UNFAVORABLE GEOLOGICAL CONDITIONS ARE ENCOUNTERED, GRADING IN THAT AREA WILL STOP UNTIL APPROVED CORRECTIVE MEASURES ARE OBTAINED.
14. ALL GRADED BANK TOPS AND TOES SHALL BE ROUNDED.
15. ALL RAMPS AND OTHER ACCESSIBILITY ACCOMMODATIONS ARE INTENDED TO COMPLY WITH THE CURRENT STANDARDS UNDER THE AMERICANS WITH DISABILITIES ACT. THE CONTRACTOR SHALL NOTIFY THE ENGINEER IF ANY PROPOSED IMPROVEMENTS ARE NOT CONSISTENT WITH THE STANDARDS.
16. ALL STREETS SHALL BE SWEPT AND KEPT CLEAN AT THE END OF EACH DAY AND SHALL COMPLY WITH ALL APPLICABLE MCSTOPPP, NPDES REQUIREMENTS FOR THE DURATION OF THE PROJECT WORK.
17. THE CONTRACTOR SHALL CONTACT UNDERGROUND SERVICE ALERT (800-227-2600) A MINIMUM OF 48 HOURS PRIOR TO EXCAVATION.
18. THE CONTRACTOR SHALL OBTAIN AN O.S.H.A. PERMIT FROM THE CALIFORNIA DIVISION OF INDUSTRIAL SAFETY PRIOR TO THE CONSTRUCTION OF TRENCHES OR EXCAVATIONS WHICH ARE 5'OR DEEPER. ALL TRENCHES 5' IN DEPTH OR GREATER SHALL BE SHORED AND BRACED ACCORDING TO STATE LAW.
19. UTILITIES AS SHOWN CONFORM TO AVAILABLE RECORD DATA. THE EXISTENCE, LOCATION AND CHARACTERISTICS OF UNDERGROUND UTILITY INFORMATION SHOWN ON THESE PLANS HAVE BEEN OBTAINED FROM A REVIEW OF AVAILABLE RECORD DATA. NO REPRESENTATION IS MADE AS TO THE ACCURACY OR COMPLETENESS OF SAID UTILITY INFORMATION. IT IS THE CONTRACTOR'S RESPONSIBILITY TO VERIFY LOCATION AND DEPTHS BY POTHOLING OF ALL UTILITIES WITH APPROPRIATE AGENCIES, AND TO TAKE PRECAUTIONARY MEASURES TO PROTECT THE UTILITY LINES SHOWN AND ANY OTHER LINES NOT OF RECORD OR NOT SHOWN ON THESE PLANS. ANY CONFLICTS SHALL BE REPORTED IMMEDIATELY TO THE ENGINEER.
20. STORM DRAINAGE IMPROVEMENTS SHOWN ON THESE PLANS HAVE BEEN DESIGNED FOR THE FINAL SITE CONDITION AT COMPLETION OF THE PROJECT. THE CONTRACTOR IS RESPONSIBLE FOR MAINTAINING ADEQUATE DRAINAGE OF THE SITE, DURING INTERIM CONDITIONS OF CONSTRUCTION.
21. CONTRACTOR SHALL PROVIDE ALL MATERIAL, LABOR, EQUIPMENT, FOR INSTALLATION, IMPLEMENTATION, AND MAINTENANCE OF ALL SURFACE WATER POLLUTION PREVENTION MEASURES THROUGHOUT THE FULL EXTENT OF THE PROJECT.
22. SALVAGED TRAFFIC SIGNAL EQUIPMENT SHALL BE DELIVERED TO DC ELECTRIC YARD IN COTATI, CA OR AS DIRECTED BY ENGINEER.
23. THIS SURVEY DOES NOT REFLECT A FINAL BOUNDARY DETERMINATION. THE BOUNDARY SHOWN HERON IS DEPICTED FOR GRAPHICHAL PURPOSES ONLY.

SYMBOLS

EXISTING		PROPOSED
	BOLLARD	
	SIGN	
	TREE / TREE TO BE REMOVED	
	LIGHT - POST MOUNTED	
	PEDESTRIAN BARRICADE	
PP	POWER POLE (WITH GUY)	
SSCO	SANITARY SEWER - CLEANOUT	
SS	SANITARY SEWER - MANHOLE	
	STORM DRAINAGE - CATCH BASIN	
	STORM DRAINAGE - CURB INLET	
	STORM DRAINAGE - DROP INLET	
SD	STORM DRAINAGE - MANHOLE	
GV	GAS VALVE	
PB	PULLBOX	PB
	FIRE HYDRANT	
WM	WATER METER	
WV	WATER VALVE	
	FOUND / SET - BENCHMARK	
	AC PAVEMENT	
	CONCRETE	

LINETYPES

EXISTING		PROPOSED
30	CONTOUR - MAJOR	30
	CONTOUR - MINOR	
	EASEMENT	
E	ELECTRICAL LINE	
	FENCE	
	FLOWLINE / SWALE	
G	GAS LINE	
	GUARDRAIL	
OH	OVERHEAD UTILITY	
	PROPERTY / LOT LINE	
	RETAINING WALL	
	RIGHT OF WAY	
SS	SANITARY SEWER	
	STORM DRAIN	
T	TELEPHONE LINE	T
	TOE OF BANK	
	TOP OF BANK	
	TRAFFIC CONDUIT	
W	WATER	

GENERAL NOTES (CONTINUED):

24. IT IS THE CONTRACTOR'S RESPONSIBILITY TO PHASE DEMOLITION IN ORDER TO MAINTAIN PEDESTRIAN PATH OF TRAVEL AND 12' MINIMUM LANE WIDTHS.
25. SAWCUT LIMITS ARE FOR REFERENCE ONLY. IT IS THE CONTRACTOR'S RESPONSIBILITY TO SAWCUT PAVEMENT TO PROVIDE LEAST INCONVENIENCE TO MOTORISTS AND 12' MINIMUM LANES. ANY ADDITIONAL REMOVE/SAWCUT ARE THE CONTRACTOR'S RESPONSIBILITY.
26. ALL CONCRETE AND FLATWORK SHALL BE REMOVED TO THE NEAREST SCORELINE, TYPICAL ALL CONFORMS.

BASIS OF TOPOGRAPHY

FIELD SURVEY SUPPLIED BY CITY AND SUPPLEMENTED BY R.W.DAVIS & ASSOCIATES

BENCHMARK

THE DATUM IS NAVD 88. TEMPORARY BENCHMARK IS A FOUND MONUMENT LOCATED ON NORTHEASTERLY CORNER OF BRIDGE WALKWAY AT THE FREITAS PARKWAY & LAS GALLINAS AVENUE INTERSECTION.

GEOTECHNICAL REPORT

GEOTECHNICAL INVESTIGATION REPORT FOR THE FREITAS PARKWAY & LAS GALLINAS AVENUE INTERSECTION IMPROVEMENT PROJECT PREPARED BY MILLER PACIFIC ENGINEERING GROUP DATA MARCH 31, 2015.

ABBREVIATIONS

AB	AGGREGATE BASE
AC	ASPHALT CONCRETE
AD	AREA DRAIN
CL	CENTERLINE / CONTROL LINE
DI	DROP INLET
EG	EXISTING GRADE
EP	EDGE OF PAVEMENT
EX	EXISTING
FC	FACE OF CURB
FG	FINISH GRADE
FH	FIRE HYDRANT
FL	FLOWLINE
FS	FINISH SURFACE
GB	GRADE BREAK
HDPE	HIGH DENSITY POLYETHYLENE PIPE
HP	HIGH POINT
JP	JOINT POLE
JT	JOINT TRENCH
LF	LINEAR FEET
LP	LOW POINT
MH	MANHOLE
NTS	NOT TO SCALE
P.C.C.	PORTLAND CEMENT CONCRETE
PVC	POLYVINYL CHLORIDE PIPE
SD	STORM DRAIN
SDCO	STORM DRAIN CLEANOUT
SDMH	STORM DRAIN MANHOLE
SF	SQUARE FEET
SS	SANITARY SEWER
SSCO	SANITARY SEWER CLEANOUT
SSMH	SANITARY SEWER MANHOLE
SW	SIDEWALK
TC	TOP OF CURB
TG	TOP OF GRATE
TW	TOP OF WALL
tw	TOE OF WALL
UNO	UNLESS NOTED OTHERWISE
VIF	VERIFY IN FIELD

SHEET INDEX

C1.0	COVER SHEET
C1.1	SHEET INDEX
C2.0	EX. CONDITIONS & DEMO PLAN - INTERSECTION
C2.1	EX. CONDITIONS & DEMO PLAN - FREITAS EAST OF INTERSECTION
C2.2	EX. CONDITIONS & DEMO PLAN - FREITAS AND LOS GAMOS ROAD
C2.3	EX. CONDITIONS & DEMO PLAN - SOUTH OF INTERSECTION
C3.0	HOR. CONTROL & AC OVERLAY - INTERSECTION
C3.1	HOR. CONTROL & AC OVERLAY - FREITAS EAST OF INTERSECTION
C3.2	HOR. CONTROL & AC OVERLAY - FREITAS AND LOS GAMOS ROAD
C3.3	HOR. CONTROL & AC OVERLAY - SOUTH OF INTERSECTION
C4.0	GRADING & DRAINAGE - INTERSECTION
C4.1	GRADING & DRAINAGE - FREITAS EAST OF INTERSECTION
C4.2	GRADING & DRAINAGE - FREITAS AND LOS GAMOS ROAD
C4.3	GRADING & DRAINAGE - SOUTH OF INTERSECTION
C4.4	GRADING & DRAINAGE - GRADING DETAILS
C5.0	SIGNING & STRIPING - INTERSECTION
C5.1	SIGNING & STRIPING - FREITAS EAST OF INTERSECTION
C5.2	SIGNING & STRIPING - FREITAS AND LOS GAMOS ROAD
C5.3	SIGNING & STRIPING - SOUTH OF INTERSECTION
C6.0	DETAIL SHEET
C6.1	PROFILES
C6.2	SECTIONS
C7.0	EROSION CONTROL
C7.1	EROSION CONTROL DETAILS
C8.0	STORMWATER CONTROL PLAN & DETAILS
L1.0	PLANTING PLAN, DETAILS AND LEGEND
L2.0	IRRIGATION NOTES AND LEGEND
L2.1	RECYCLED WATER NOTES - IRRIGATION
L2.2	IRRIGATION PLAN
L2.3	IRRIGATION DETAILS
L2.4	IRRIGATION DETAILS
L2.5	IRRIGATION DETAILS
S1.0	STRUCTURAL PLANS
S2.0	STRUCTURAL DETAILS
TS-1	TRAFFIC SIGNAL PLAN
TS-2	CONDUCTOR & EQUIPMENT SCHEDULES

U.S.A. NOTIFICATION SERVICE

CALL BEFORE YOU DIG 800-642-2444

NO.	REVISION	BY	DATE
1	35% CD	RJS	02-20-15
2	65% CD	RJS	05-06-15
3	95% CD	RJS	09-28-15
4	100% CD	RJS	01-05-17

DESIGNED RJS
DRAWN SAS
CHECKED RJS
APPROVED
DATE

PROJECT NAME: FREITAS PKWY & LAS GALLINAS INTERSECTION IMP PROJECT
DRAWING NAME: COVER SHEET
SAN RAFAEL COUNTY OF MARIN CALIFORNIA

REGISTERED PROFESSIONAL ENGINEER
RICHARD J. SOUZA
No. 67892
CIVIL
STATE OF CALIFORNIA

CSW ST2
CSW/Stuber-Stroeh Engineering Group, Inc.
45 Leveroni Court
Novato, CA 94949
tel: 415.883.9850
fax: 415.883.9835
Civil & Structural Engineers
Surveying & Mapping
Environmental Planning
Construction Management

CITY OF SAN RAFAEL
DEPARTMENT OF
PUBLIC WORKS

SCALE: as shown
DATE: 2-16-16
CITY PROJECT NO.: 11171
SHEET NO.: C1.0
DRAWING: 1 OF 36

HOLLY DRIVE

LAS GALLINAS AVENUE

C2.0 C3.0 C4.0 C5.0

86'

LANDS OF SAN RAFAEL

FREITAS PARKWAY

DRAINAGE CHANNEL

C2.1 C3.1 C4.1 C5.1

LANDS OF SAN RAFAEL

135'

FREITAS PARKWAY

DRAINAGE CHANNEL

C2.3
C3.3
C4.3
C5.3

80'

LAS GALLINAS AVENUE

50'

LOS GAMOS ROAD

C2.2
C3.2
C4.2
C5.2

Graphic Scale (in feet)

50 0 50 100

1 inch = 50 ft.

NO.	REVISION	BY	DATE
1	35% CD	RJS	02-20-15
2	65% CD	RJS	05-06-15
3	95% CD	RJS	09-28-15
4	100% CD	RJS	01-05-17

DESIGNED RJS
DRAWN SAS
CHECKED RJS
APPROVED
DATE

PROJECT NAME
FREITAS PKWY & LAS GALLINAS INTERSECTION IMP PROJECT

DRAWING NAME
SHEET INDEX

SAN RAFAEL COUNTY OF MARIN CALIFORNIA

REGISTERED PROFESSIONAL ENGINEER
RICHARD J. SOUZA
No. 67892
CIVIL
STATE OF CALIFORNIA

CSW|ST2
CSW/Stuber-Stroeh Engineering Group, Inc.
45 Leveroni Court
Novato, CA 94949
tel: 415.883.9850
fax: 415.883.9835
Civil & Structural Engineers
Surveying & Mapping
Electrical Engineering
Construction Management

CITY OF SAN RAFAEL
DEPARTMENT OF PUBLIC WORKS

SCALE: 1" = 50'
DATE: 2-16-16
CITY PROJECT NO.: 11171
SHEET NO.: C1.1
DRAWING: 2 OF 36

DEMOLITION KEYNOTES

1. REMOVE & DISPOSE EX. TREE, SEE PLAN FOR TREE SIZE. GRIND STUMP MIN. 2' BELOW GRADE. (REMOVE IF IN WAY OF IMPROVEMENTS)
2. GRINDOUT EX. STRIPING AND MARKING WITHIN PROJECT LIMITS.
3. REMOVE & SALVAGE EX. TRAFFIC SIGN. SEE PLANS FOR SPECIFIED MUTCD SIGN DESIGNATION. SEE SHEET C5.0 FOR NEW LOCATION.
4. REMOVE & DISPOSE EX. CONCRETE CURB, SEE PLAN FOR LENGTH.
5. PROTECT EX. UTILITY IN PLACE.
6. REMOVE & DISPOSE EX. RAMP.
7. REMOVE AND REPLACE EXISTING CATCH BASIN WITH MANHOLE
8. REMOVE & DISPOSE EX. TRAFFIC SIGNAL POLE, SEE SHEET TS-1.
9. REMOVE & DISPOSE EX. TRAFFIC SIGNAL PULLBOX.
10. REMOVE EX. CURB AND GUTTER, SEE PLAN FOR LENGTH.
11. REMOVE & DISPOSE EX. CONCRETE ISLAND AND CURB.
12. REMOVE & DISPOSE EX. "YIELD TO PEDS" SIGN.
13. SEE STRUCTURAL PLANS FOR BRIDGE/WALL DEMOLITION AND REMOVAL.
14. (4) 4" AT&T CONDUITS TO BE RELOCATED BY OTHERS (NIC), SEE SHEET C4.0
15. RELOCATE EX. ROCK AS SHOWN ON THE PLAN OR AS DIRECTED BY THE ENGINEER
16. REMOVE & DISPOSE EX. ARBORS INCLUDING POSTS
17. REMOVE & DISPOSE EX. BENCH
18. REMOVE & REMOUNT EX. SD GRATE, SEE DETAIL 11 ON SHEET S2.0
19. RELOCATE EXISTING UTILITY BOX TO BACK OF NEW CURB. SEE SHEET C4.0.
20. ABANDON EX. TRAFFIC SIGNAL CONDUITS
21. CAUTION, EX.HIGH PRESSURE GAS LINE. CONTRACTOR TO COORDINATE WITH PG&E.
22. REMOVE & SALVAGE EX. TRAFFIC EQUIPMENT, REMOVE REFER TO TS SHEETS FOR SALVAGED EQUIPMENT, REMOVE BOLLARDS AND FOUNDATION.
23. REMOVE & DISPOSE EX. PEDESTRIAN BARRICADE.
24. REMOVE & SALVAGE EX. BIKE LANE & BEGIN SIGN. SEE SHEET C5.0 FOR NEW LOCATION.
25. PROTECT IN PLACE EX. SIGN. SEE PLANS FOR SPECIFIED CALIFORNIA (CA) SIGN CODE.
26. PROTECT IN PLACE EX. STORM DRAIN PIPES (TYP.)
27. REMOVE & DISPOSE OF EXISTING STORM STRUCTURE.
28. REMOVE & SALVAGE EXISTING TRAFFIC SIGNAL AND EQUIPMENT, SEE NOTE 22 ON SHEET C1.0
29. REMOVE & DISPOSE EX. CONCRETE WALK
30. REMOVE & DISPOSE OF EXISTING JUNIPERS AND BRUSH WITHIN LIMITS OF CONSTRUCTION

LEGEND

- LIMITS OF BRIDGE AND WALL DEMOLITION. SEE STRUCTURAL SHEETS FOR MORE INFORMATION.
- LIMITS OF PAVEMENT AND CONCRETE SECTION (INCLUDING BASE ROCK) DEMOLITION
- LIMITS OF WORK
- UNDERGROUND UTILITY TO BE ABANDONED

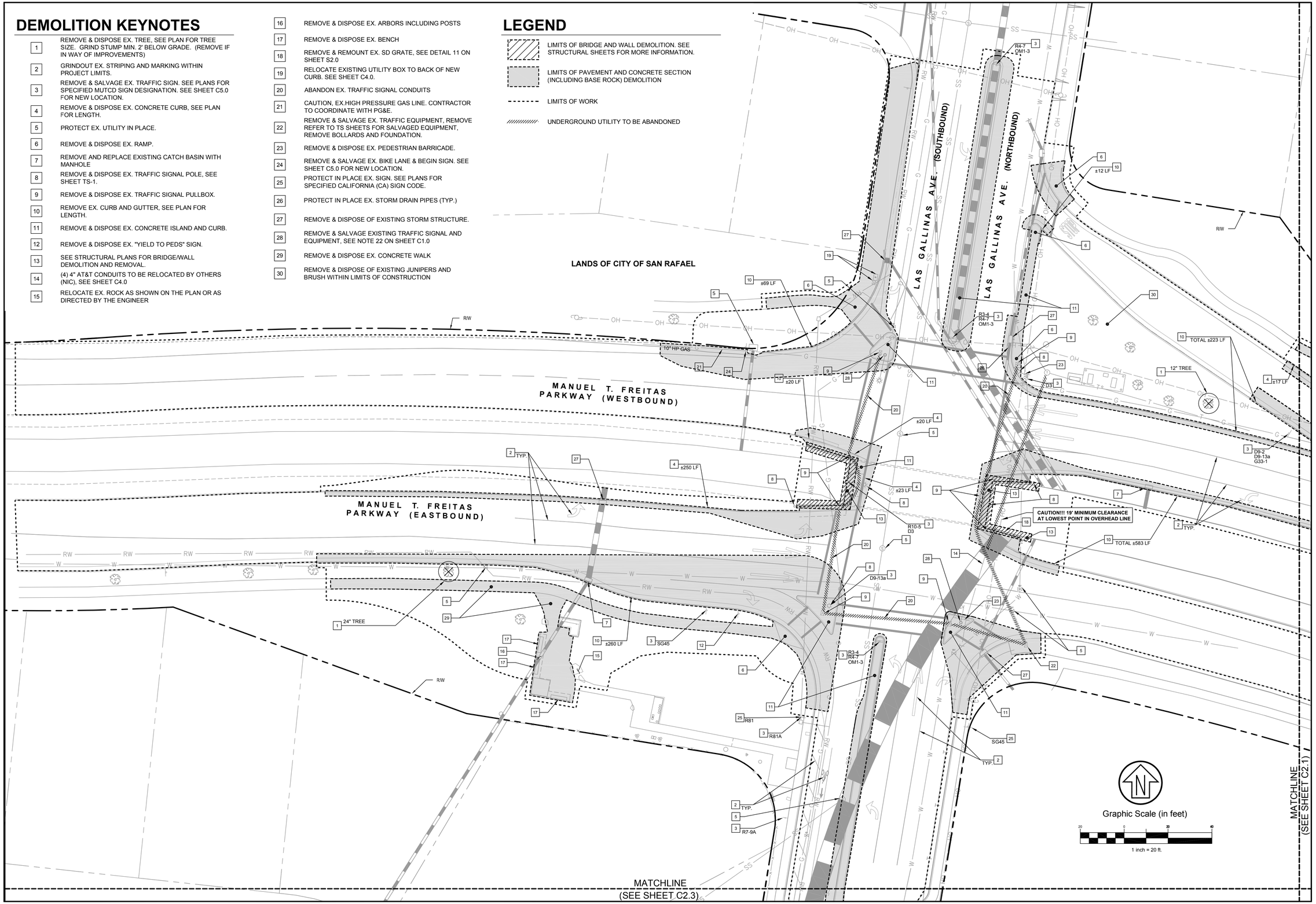

NO.	REVISION	BY	DATE
1	35% CD	RJS	02-20-15
2	65% CD	RJS	05-06-15
3	95% CD	RJS	09-28-15
4	100% CD	RJS	01-05-17
			DATE

DESIGNED	RJS	
DRAWN	SAS	
CHECKED	RJS	
APPROVED		DATE

PROJECT NAME
FREITAS PKWY & LAS GALLINAS INTERSECTION IMP PROJECT

DRAWING NAME
EX. CONDITIONS & DEMO PLAN
MANUEL T. FRIETAS PARKWAY
LAS GALLINAS AVE INTERSECTION
SAN RAFAEL COUNTY OF MARIN CALIFORNIA

REGISTERED PROFESSIONAL ENGINEER
RICHARD J. SOUZA
No. 67892
CIVIL
STATE OF CALIFORNIA

CSW ST2
CSW/Stuber-Stroeh Engineering Group, Inc.
45 Leveroni Court
Novato, CA 94949
tel: 415.883.9850
fax: 415.883.9835
Civil & Structural Engineers
Surveying & Mapping
Electrical Engineering
Construction Management

CITY OF SAN RAFAEL
DEPARTMENT OF PUBLIC WORKS

SCALE:	1" = 20'
DATE:	2-16-16
CITY PROJECT NO.:	11171
SHEET NO.:	C2.0
DRAWING:	3 OF 36

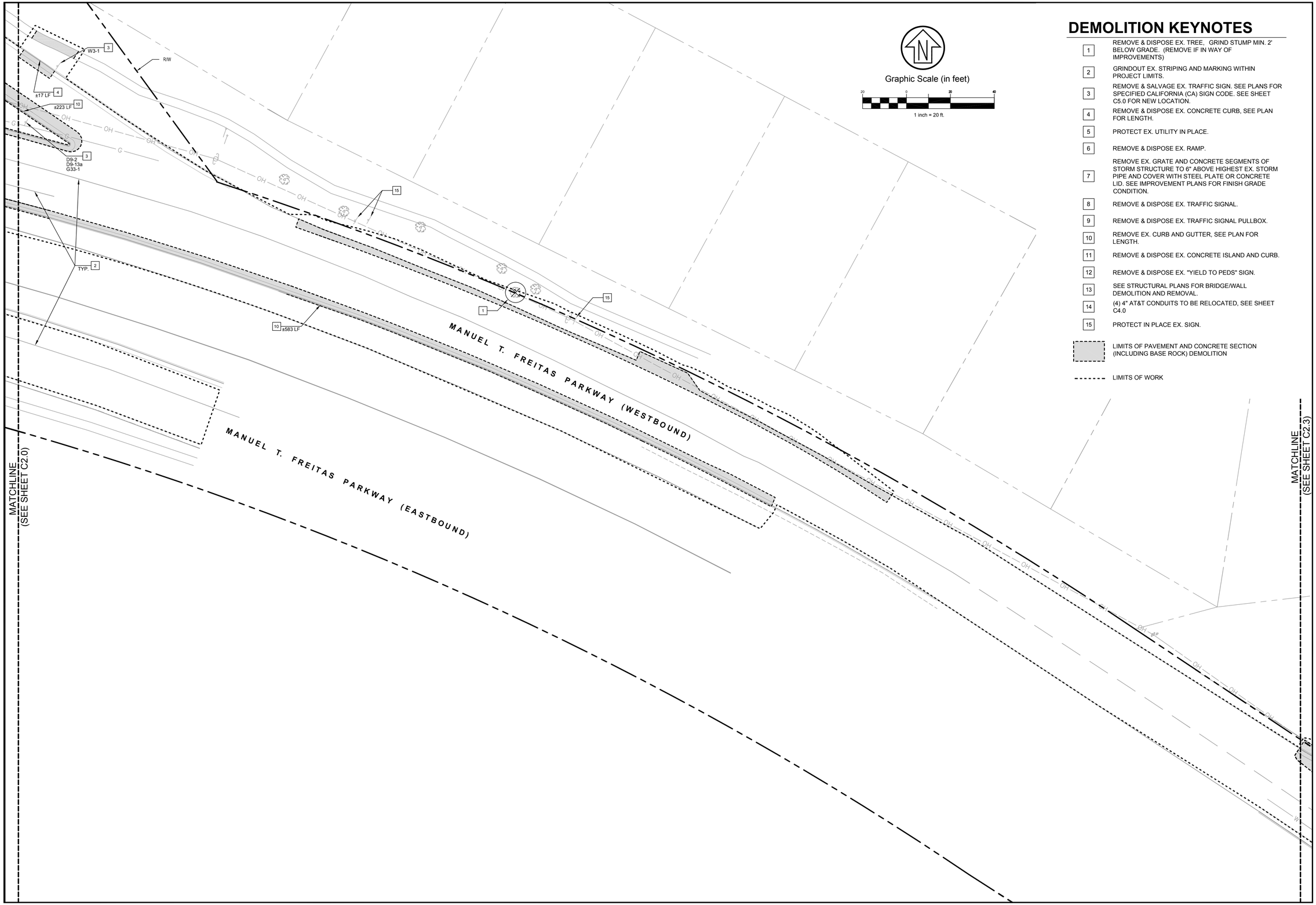

Graphic Scale (in feet)

20 0 20 40

1 inch = 20 ft.

DEMOLITION KEYNOTES

1. REMOVE & DISPOSE EX. TREE, GRIND STUMP MIN. 2' BELOW GRADE. (REMOVE IF IN WAY OF IMPROVEMENTS)
2. GRINDOUT EX. STRIPING AND MARKING WITHIN PROJECT LIMITS.
3. REMOVE & SALVAGE EX. TRAFFIC SIGN. SEE PLANS FOR SPECIFIED CALIFORNIA (CA) SIGN CODE. SEE SHEET C5.0 FOR NEW LOCATION.
4. REMOVE & DISPOSE EX. CONCRETE CURB, SEE PLAN FOR LENGTH.
5. PROTECT EX. UTILITY IN PLACE.
6. REMOVE & DISPOSE EX. RAMP.
7. REMOVE EX. GRATE AND CONCRETE SEGMENTS OF STORM STRUCTURE TO 6" ABOVE HIGHEST EX. STORM PIPE AND COVER WITH STEEL PLATE OR CONCRETE LID. SEE IMPROVEMENT PLANS FOR FINISH GRADE CONDITION.
8. REMOVE & DISPOSE EX. TRAFFIC SIGNAL.
9. REMOVE & DISPOSE EX. TRAFFIC SIGNAL PULLBOX.
10. REMOVE EX. CURB AND GUTTER, SEE PLAN FOR LENGTH.
11. REMOVE & DISPOSE EX. CONCRETE ISLAND AND CURB.
12. REMOVE & DISPOSE EX. "YIELD TO PEDS" SIGN.
13. SEE STRUCTURAL PLANS FOR BRIDGE/WALL DEMOLITION AND REMOVAL.
14. (4) 4" AT&T CONDUITS TO BE RELOCATED, SEE SHEET C4.0
15. PROTECT IN PLACE EX. SIGN.

LIMITS OF PAVEMENT AND CONCRETE SECTION (INCLUDING BASE ROCK) DEMOLITION

LIMITS OF WORK

NO.	REVISION	BY	DATE
1	35% CD	RJS	02-20-15
2	65% CD	RJS	05-06-15
3	95% CD	RJS	09-28-15
4	100% CD	RJS	01-05-17
			DATE

DESIGNED RJS
DRAWN SAS
CHECKED RJS
APPROVED
DATE

PROJECT NAME
FREITAS PKWY & LAS GALLINAS INTERSECTION IMP PROJECT

DRAWING NAME
EX. CONDITIONS & DEMO PLAN MANUEL T. FRIETAS PARKWAY EAST OF INTERSECTION
SAN RAFAEL COUNTY OF MARIN CALIFORNIA

REGISTERED PROFESSIONAL ENGINEER
RICHARD J. SOUZA
No. 67892
CIVIL
STATE OF CALIFORNIA

CSW/ST2
CSW/Stuber-Stroeh Engineering Group, Inc.
45 Leveroni Court
Novato, CA 94949
tel: 415.883.9850
fax: 415.883.9835
Civil & Structural Engineers
Surveying & Mapping
Electrical Engineering
Construction Management

CITY OF SAN RAFAEL
DEPARTMENT OF
PUBLIC WORKS

SCALE: 1" = 20'
DATE: 2-16-16
CITY PROJECT NO.: 11171
SHEET NO.: C2.1
DRAWING: 4 OF 36

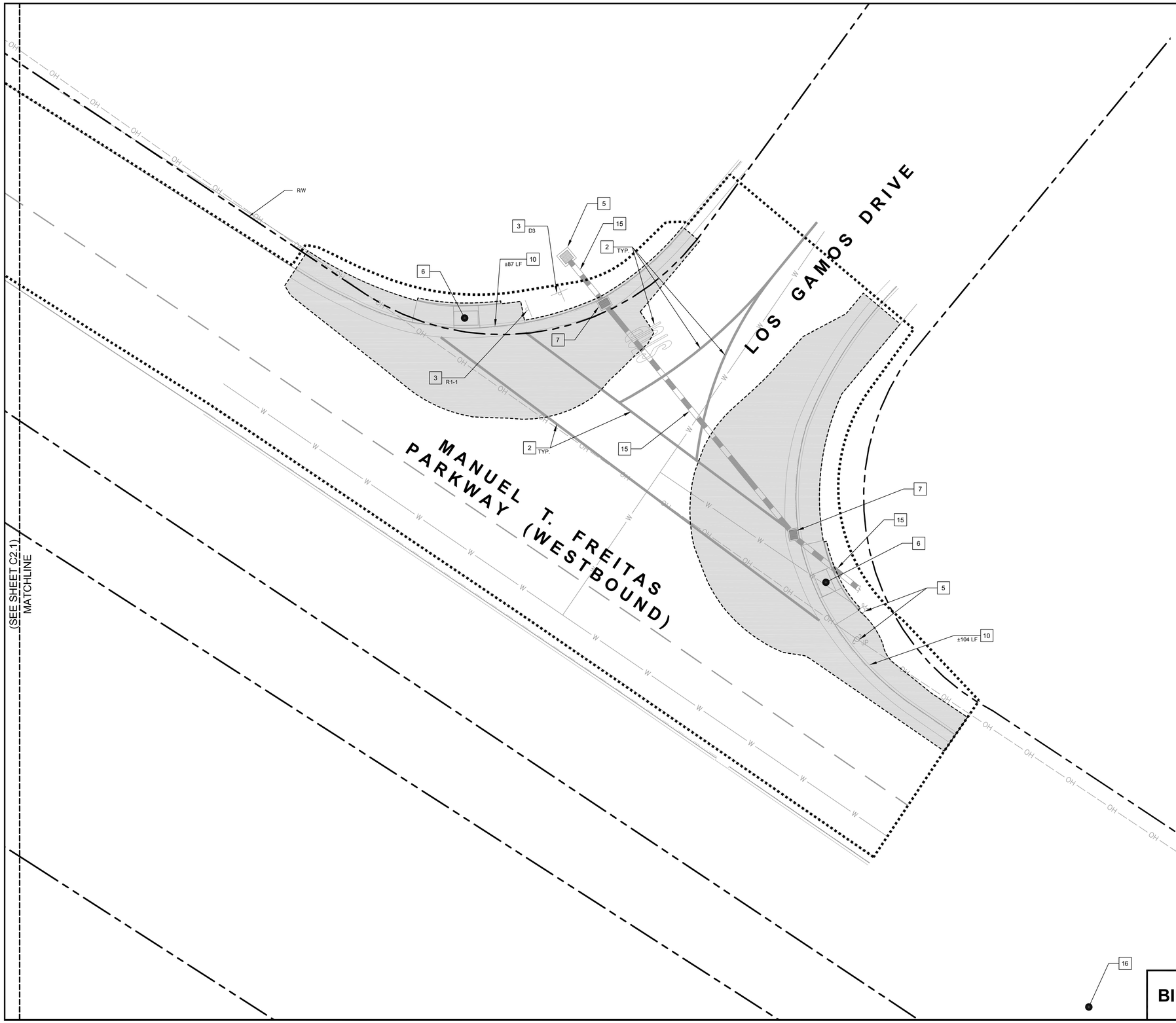

DEMOLITION KEYNOTES

1	REMOVE & DISPOSE EXISTING TREE, SEE PLAN FOR TREE SIZE.
2	GRINDOUT EXISTING STRIPING AND MARKING WITHIN PROJECT LIMITS.
3	REMOVE & SALVAGE EX. TRAFFIC SIGN. SEE PLANS FOR SPECIFIED CALIFORNIA (CA) SIGN CODE. SEE SHEET C5.0 FOR NEW LOCATION.
4	REMOVE & DISPOSE EXISTING CONCRETE CURB, SEE PLAN FOR LENGTH.
5	PROTECT EXISTING UTILITY IN PLACE.
6	REMOVE & DISPOSE EXISTING RAMP.
7	REMOVE EX. GRATE AND CONCRETE SEGMENTS OF STORM STRUCTURE TO 6" ABOVE HIGHEST EX. STORM PIPE AND COVER WITH STEEL PLATE OR CONCRETE LID. SEE IMPROVEMENT PLANS FOR FINISH GRADE CONDITION.
8	REMOVE & DISPOSE EXISTING TRAFFIC SIGNAL.
9	REMOVE & DISPOSE EXISTING TRAFFIC SIGNAL PULLBOX.
10	REMOVE EXISTING CURB AND GUTTER, SEE PLAN FOR LENGTH.
11	REMOVE & DISPOSE EXISTING CONCRETE ISLAND AND CURB.
12	REMOVE & DISPOSE EXISTING "YIELD TO PEDS" SIGN.
13	SEE STRUCTURAL PLANS FOR BRIDGE/WALL DEMOLITION AND REMOVAL.
14	(4) 4" AT&T CONDUITS TO BE RELOCATED, SEE SHEET C4.0
15	PROTECT IN PLACE EX. 12" RCP STORM DRAIN.
16	REMOVE & DISPOSE WATCH FOR STOPPED TRAFFIC SIGN (APPROXIMATELY 200' SOUTHWEST OF LOS GAMOS INTERSECTION)

LIMITS OF PAVEMENT AND CONCRETE SECTION (INCLUDING BASE ROCK) DEMOLITION

LIMITS OF WORK

Graphic Scale (in feet)

10 0 10 20

1 inch = 10 ft.

BID ALTERNATE NO. 1

NO.	REVISION	BY	DATE
1	35% CD	RJS	02-20-15
2	65% CD	RJS	05-06-15
3	95% CD	RJS	09-28-15
4	100% CD	RJS	01-05-17
			DATE

DESIGNED	RJS	
DRAWN	SAS	
CHECKED	RJS	
APPROVED		DATE

PROJECT NAME
FREITAS PKWY & LAS GALLINAS INTERSECTION IMP PROJECT

DRAWING NAME
EX. CONDITIONS & DEMO PLAN MANUEL T. FRIETAS PARKWAY AND LOS GAMOS ROAD
SAN RAFAEL COUNTY OF MARIN CALIFORNIA

REGISTERED PROFESSIONAL ENGINEER
RICHARD J. SOUZA
No. 67892
CIVIL
STATE OF CALIFORNIA

CSW ST2
CSW/Stuber-Stroeh Engineering Group, Inc.
45 Leveroni Court
Novato, CA 94949
tel: 415.883.9850
fax: 415.883.9835
Civil & Structural Engineers
Surveying & Mapping
Environmental Planning
Construction Management

CITY OF SAN RAFAEL
DEPARTMENT OF PUBLIC WORKS

SCALE: 1' = 10'
DATE: 2-16-16
CITY PROJECT NO.: 11171
SHEET NO.: C2.2
DRAWING: 5 OF 36

DEMOLITION KEYNOTES

1	REMOVE & DISPOSE EXISTING TREE, SEE PLAN FOR TREE SIZE.
2	GRINDOUT EXISTING STRIPING AND MARKING WITHIN PROJECT LIMITS.
3	REMOVE & SALVAGE EXISTING TRAFFIC SIGN.
4	REMOVE & DISPOSE EXISTING CONCRETE CURB, SEE PLAN FOR LENGTH.
5	PROTECT EXISTING UTILITY IN PLACE.
6	REMOVE & DISPOSE EXISTING RAMP.
7	REMOVE EX. GRATE AND CONCRETE SEGMENTS OF STORM STRUCTURE TO 6" ABOVE HIGHEST EX. STORM PIPE AND COVER WITH STEEL PLATE OR CONCRETE LID. SEE IMPROVEMENT PLANS FOR FINISH GRADE CONDITION.
8	REMOVE & DISPOSE EXISTING TRAFFIC SIGNAL.
9	REMOVE & DISPOSE EXISTING TRAFFIC SIGNAL PULLBOX.
10	REMOVE EXISTING CURB AND GUTTER, SEE PLAN FOR LENGTH.
11	REMOVE & DISPOSE EXISTING CONCRETE ISLAND AND CURB.
12	REMOVE & DISPOSE EXISTING "YIELD TO PEDS" SIGN.
13	SEE STRUCTURAL PLANS FOR BRIDGE/WALL DEMOLITION AND REMOVAL.
14	(4) 4" AT&T CONDUITS TO BE RELOCATED, SEE SHEET C4.0
15	REMOVE & DISPOSE EX. BIKE LANE SIGN.

LIMITS OF PAVEMENT AND CONCRETE SECTION (INCLUDING BASE ROCK) DEMOLITION

LIMITS OF WORK.

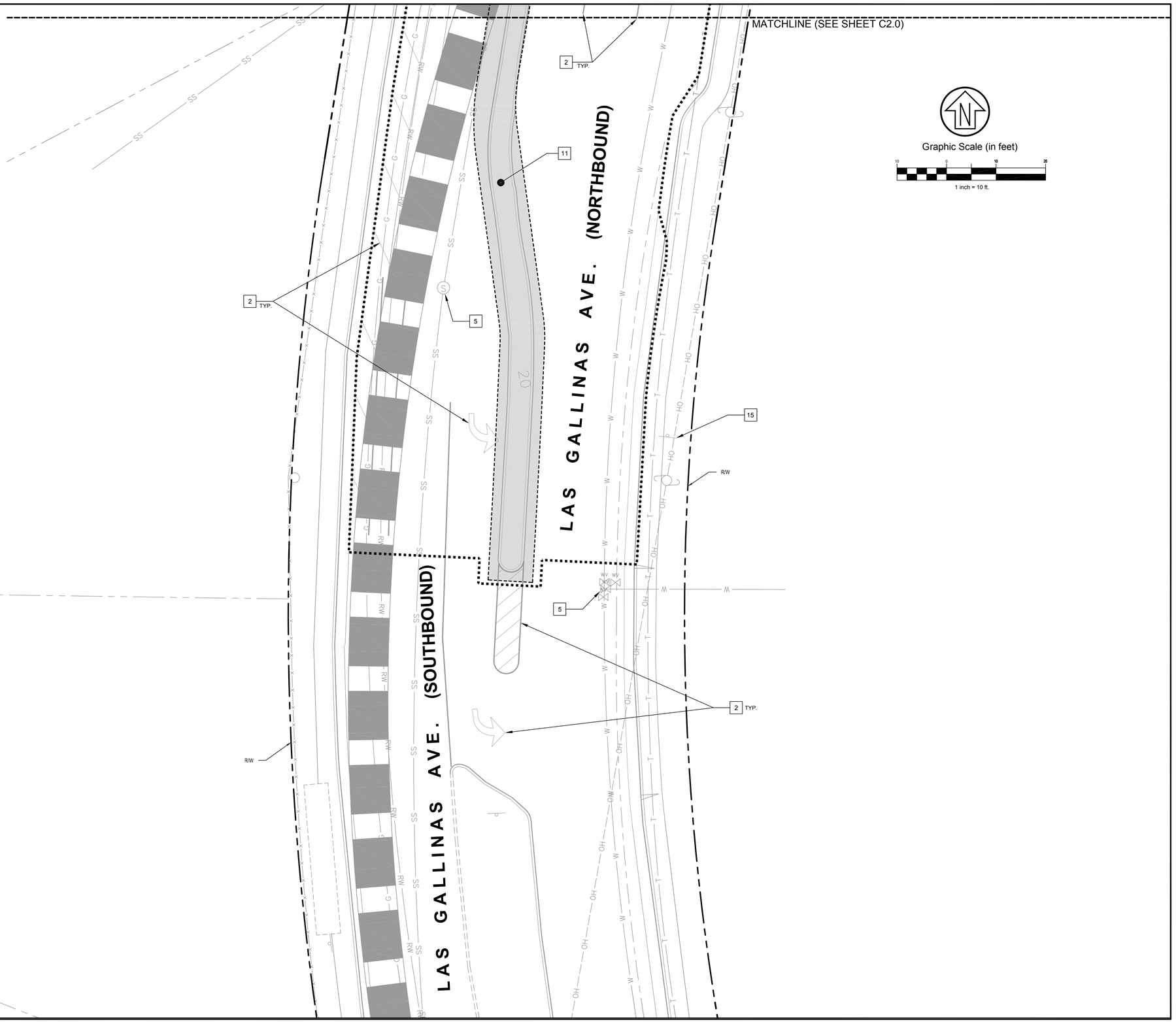

NO.	REVISION	BY	DATE
1	35% CD	RJS	02-20-15
2	65% CD	RJS	05-06-15
3	95% CD	RJS	09-28-15
4	100% CD	RJS	01-05-17

DESIGNED	RJS	DATE
DRAWN	SAS	
CHECKED	RJS	
APPROVED		DATE

PROJECT NAME
FREITAS PKWY & LAS GALLINAS INTERSECTION IMP PROJECT

DRAWING NAME
EX. CONDITIONS & DEMO PLAN
MANUEL T. FRIETAS PARKWAY
SOUTH OF INTERSECTION
SAN RAFAEL COUNTY OF MARIN CALIFORNIA

REGISTERED PROFESSIONAL ENGINEER
RICHARD J. SOUZA
No. 67892
CIVIL
STATE OF CALIFORNIA

CSW|ST2
CSW/Stuber-Stroeh Engineering Group, Inc.
45 Leveroni Court
Novato, CA 94949
tel: 415.883.8850
fax: 415.883.8858
Civil & Structural Engineers
Surveying & Mapping
Electrical Engineering
Construction Management

CITY OF SAN RAFAEL
DEPARTMENT OF
PUBLIC WORKS

SCALE:	1" = 10'
DATE:	2-16-16
CITY PROJECT NO.:	11171
SHEET NO.:	C2.3
DRAWING:	6 OF 36

LINE TABLE		
TAG	BEARING	DISTANCE
L1	N82°15'45"E	43.53'
L2	S75°06'45"E	36.02'
L3	S09°03'50"W	8.82'
L4	S08°56'15"W	30.86'
L5	S73°43'40"E	6.33'
L6	S86°55'03"E	32.92'
L7	S85°00'14"E	27.80'
L8	S09°22'45"W	3.86'
L9	S42°55'17"E	2.00'
L10	N80°33'48"W	0.36'
L11	S06°58'25"W	1.24'
L12	N09°26'12"E	26.23'
L13	S44°52'34"W	25.99'
L14	S44°52'34"W	24.32'
L15	S55°56'24"E	24.40'

LINE TABLE		
TAG	BEARING	DISTANCE
L16	N09°08'15"E	36.72'
L17	N08°47'30"E	7.75'
L18	N86°21'01"E	7.24'
L19	N86°29'31"E	11.35'
L20	N47°35'39"E	28.80'
L21	N08°47'38"E	7.89'
L22	N09°26'12"E	10.43'
L23	S08°19'15"W	16.26'
L24	N80°50'07"W	13.69'
L25	S09°52'10"W	3.30'
L26	N80°48'49"W	2.19'
L27	S09°33'55"W	9.74'
L28	S10°16'53"W	6.02'
L29	N80°09'28"W	19.82'
L30	N08°31'22"E	11.85'

CURVE TABLE			
TAG	RADIUS	LENGTH	DELTA
C1	60.00'	6.82'	006°30'47"
C2	80.00'	18.20'	013°02'02"
C3	60.00'	15.71'	015°00'09"
C4	80.00'	13.82'	009°54'04"
C5	27.00'	17.98'	038°09'33"
C6	27.00'	26.88'	057°01'55"
C7	96.05'	68.59'	040°54'38"
C8	55.00'	32.90'	034°16'30"
C9	55.00'	18.58'	019°21'30"
C10	45.00'	27.58'	035°07'15"
C11	15.00'	23.04'	088°00'19"
C12	28.00'	13.14'	026°53'50"
C13	31.00'	20.98'	038°46'54"
C14	31.00'	22.06'	040°46'43"
C15	1.00'	1.44'	082°39'55"
C16	200.00'	6.68'	001°54'49"

CURVE TABLE			
TAG	RADIUS	LENGTH	DELTA
C17	27.00'	12.78'	027°07'22"
C18	27.00'	16.77'	035°35'45"
C19	27.00'	10.93'	023°11'02"
C20	15.00'	13.51'	051°35'47"
C21	32.16'	22.83'	040°40'49"
C22	2.00'	3.23'	092°27'47"
C23	7.00'	4.76'	038°57'39"
C24	17.00'	10.05'	033°53'07"
C25	29.00'	23.20'	045°50'40"
C26	29.00'	23.20'	045°50'40"
C27	2.00'	5.60'	160°31'49"
C28	89.19'	16.88'	010°50'36"
C29	24.00'	6.95'	016°35'52"
C30	24.00'	6.95'	016°35'52"
C31	100.00'	11.73'	006°43'16"

POINT TABLE				
POINT #	NORTHING	EASTING	ELEVATION	DESCRIPTION
1	2196510.5067	5971411.4091	17.93	X SCRIBED IN CONC.
2	2196880.3722	5971471.9948	17.77	FOUND MONUMENT
3	2196514.0388	5971374.7527	17.00	FOUND MONUMENT
4	2196534.5377	5971409.1215	17.67	BENCHMARK TL-1
5	2196483.5448	5971623.3652	14.84	60D NAIL
6	2196608.5391	5971468.7557	16.57	60D NAIL
7	2196554.8182	5971127.7645	11.76	TEMPORARY CONTROL
8	2196302.9260	5971375.0428	19.28	X SCRIBED IN CONC.
9	2196432.5121	5971520.3377	18.49	TEMPORARY CONTROL

LEGEND

2" AC GRIND & OVERLAY (FULL WIDTH), SEE DETAIL 11 ON SHEET C6.0

LIMIT OF WORK (TYP.) SAWCUT AND CONFORM WHERE APPLICABLE, SEE DETAIL 3 ON SHEET C6.0

MANUEL T. FREITAS PARKWAY (WESTBOUND)

MANUEL T. FREITAS PARKWAY (EASTBOUND)

LAS GALLINAS AVE.

CP#7

CP#3 FOUND MONUMENT

MATCHLINE (SEE SHEET C3.1)

MATCHLINE (SEE SHEET C3.3)

Graphic Scale (in feet)

1 inch = 20 ft.

NO.	REVISION	BY	DATE
1	35% CD	RJS	02-20-15
2	65% CD	RJS	05-06-15
3	95% CD	RJS	09-28-15
4	100% CD	RJS	01-05-17

		DATE
DESIGNED	RJS	
DRAWN	SAS	
CHECKED	RJS	
APPROVED		

PROJECT NAME

FREITAS PKWY & LAS GALLINAS INTERSECTION IMP PROJECT

DRAWING NAME

HORIZONTAL CONTROL & AC OVERLAY
MANUEL T. FRIETAS PARKWAY
LAS GALLINAS INTERSECTION
SAN RAFAEL COUNTY OF MARIN CALIFORNIA

REGISTERED PROFESSIONAL ENGINEER
RICHARD J. SOUZA
No. 67892
CIVIL
STATE OF CALIFORNIA

CSW/ST2
CSW/Stuber-Stroeh Engineering Group, Inc.
45 Leveroni Court
Novato, CA 94949
tel: 415.883.9850
fax: 415.883.9835
Civil & Structural Engineers
Surveying & Mapping
Environmental Planning
Construction Management

CITY OF SAN RAFAEL
DEPARTMENT OF
PUBLIC WORKS

SCALE:	1" = 20'
DATE:	2-16-16
CITY PROJECT NO.:	11171
SHEET NO.:	C3.0
DRAWING:	7 OF 36

Graphic Scale (in feet)

20 0 20 40

1 inch = 20 ft.

MATCHLINE (SEE SHEET C3.0)

MATCHLINE (SEE SHEET C3.2)

FREITAS PARKWAY - W.B.
7+75.78 16.00 RT

Δ=5°38'06" R=1606.00' L=157.95'

8+00

N17°53'24"E
26.04'

CP#5
60d NAIL

7+00

16'

20'

MANUEL T. FREITAS PARKWAY (WESTBOUND)

Δ=9°13'51" R=1606.00' L=258.74'

6+00

PCC: 5+43.03

7+00

7+86.84

MANUEL T. FREITAS PARKWAY (EASTBOUND)

R=200.00'
Δ=4°06'21"
L=14.33

S66°10'14"E
20.94'

Δ=6°56'37" R=594.00' L=71.99'

5+00

FREITAS PARKWAY - W.B.
4+81.25 16.00 RT

FREITAS PARKWAY - W.B.
5+63.30 20.00 LT

FREITAS PARKWAY - W.B.
5+25.11 17.00 LT

BC: 4+81.05

60'

4+00

N65°56'08"W 381.25'

3+00

55'

FREITAS PARKWAY - W.B.
2+62.78 24.48 RT

LEGEND

2" AC GRIND & OVERLAY (FULL WIDTH), SEE DETAIL 11 ON SHEET C6.0

DESIGNED	RJS
DRAWN	SAS
CHECKED	RJS
APPROVED	
DATE	

NO.	REVISION	BY	DATE
1	35% CD	RJS	02-20-15
2	65% CD	RJS	05-06-15
3	95% CD	RJS	09-28-15
4	100% CD	RJS	01-05-17
			DATE

PROJECT NAME

FREITAS PKWY & LAS GALLINAS INTERSECTION IMP PROJECT

DRAWING NAME

HORIZONTAL CONTROL & AC OVERLAY MANUEL T. FRIETAS PARKWAY EAST OF INTERSECTION

SAN RAFAEL COUNTY OF MARIN CALIFORNIA

REGISTERED PROFESSIONAL ENGINEER
RICHARD J. SOUZA
No. 67892
CIVIL
STATE OF CALIFORNIA

CSW/ST2
CSW/Stuber-Stroeh Engineering Group, Inc.
45 Leveroni Court
Novato, CA 94949
tel: 415.883.6850
fax: 415.883.9835
Civil & Structural Engineers
Surveying & Mapping
Electrical Engineering
Construction Management

CITY OF SAN RAFAEL
DEPARTMENT OF PUBLIC WORKS

SCALE: 1" = 20'

DATE: 2-16-16

CITY PROJECT NO.: 11171

SHEET NO.: C3.1

DRAWING: 8 OF 36

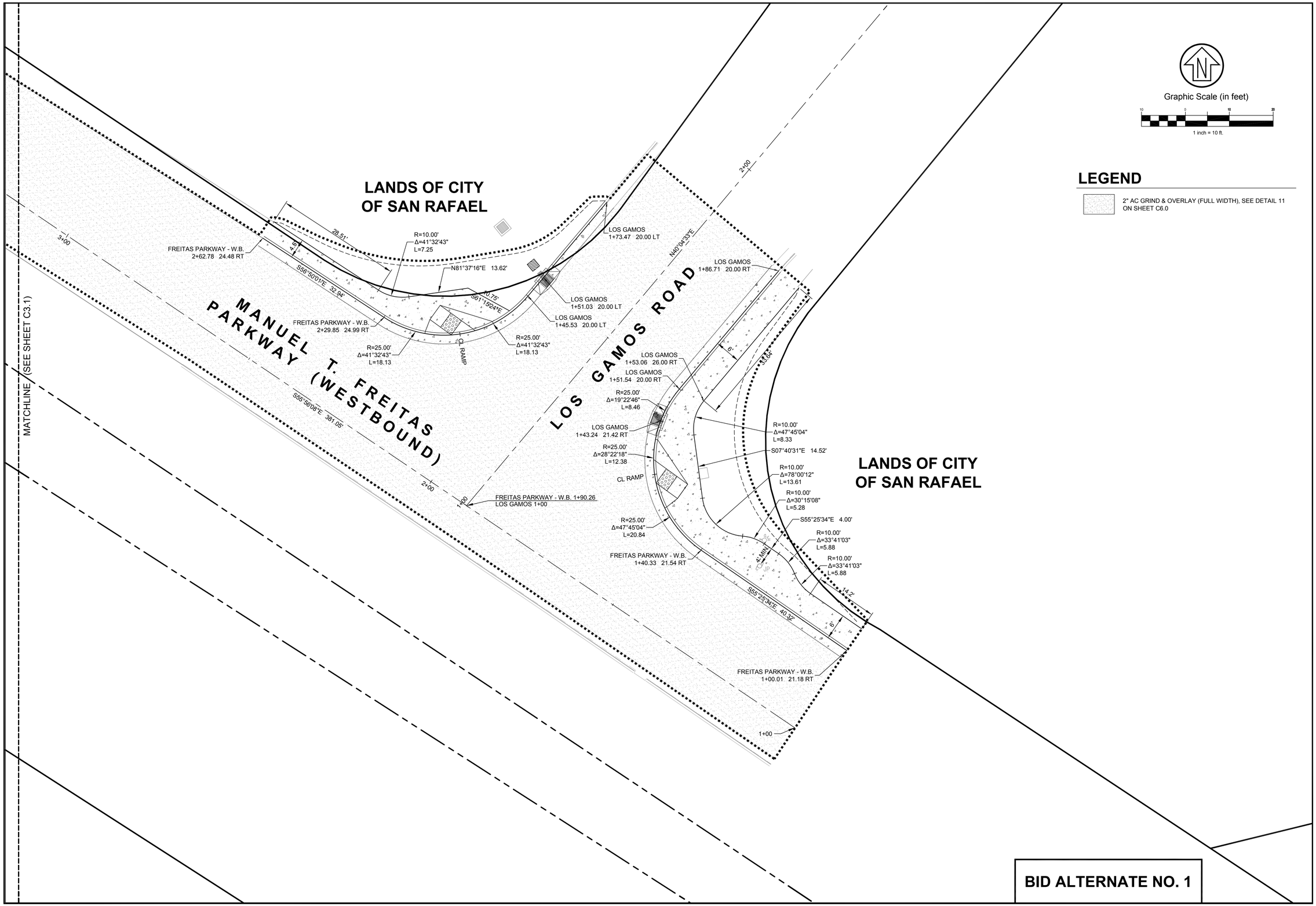

Graphic Scale (in feet)

10 0 10 20

1 inch = 10 ft.

LEGEND

2" AC GRIND & OVERLAY (FULL WIDTH), SEE DETAIL 11 ON SHEET C6.0

NO.	REVISION	BY	DATE
1	35% CD	RJS	02-20-15
2	65% CD	RJS	05-06-15
3	95% CD	RJS	09-28-15
4	100% CD	RJS	01-05-17

DESIGNED RJS
DRAWN SAS
CHECKED RJS
APPROVED
DATE

PROJECT NAME
FREITAS PKWY & LAS GALLINAS INTERSECTION IMP PROJECT

DRAWING NAME
HORIZONTAL CONTROL & AC OVERLAY
MANUEL T. FRIETAS PARKWAY
LOS GAMOS ROAD INTERSECTION
SAN RAFAEL COUNTY OF MARIN CALIFORNIA

REGISTERED PROFESSIONAL ENGINEER
RICHARD J. SOUZA
No. 67892
CIVIL
STATE OF CALIFORNIA

CSW|ST2
CSW/Stuber-Stroeh Engineering Group, Inc.
45 Leveroni Court
Novato, CA 94949
tel: 415.883.9850
fax: 415.883.9835
Civil & Structural Engineers
Surveying & Mapping
Electrical Engineering
Construction Management

CITY OF SAN RAFAEL
DEPARTMENT OF
PUBLIC WORKS

SCALE: 1" = 10'
DATE: 2-16-16
CITY PROJECT NO.: 11171
SHEET NO.: C3.2
DRAWING: 9 OF 36

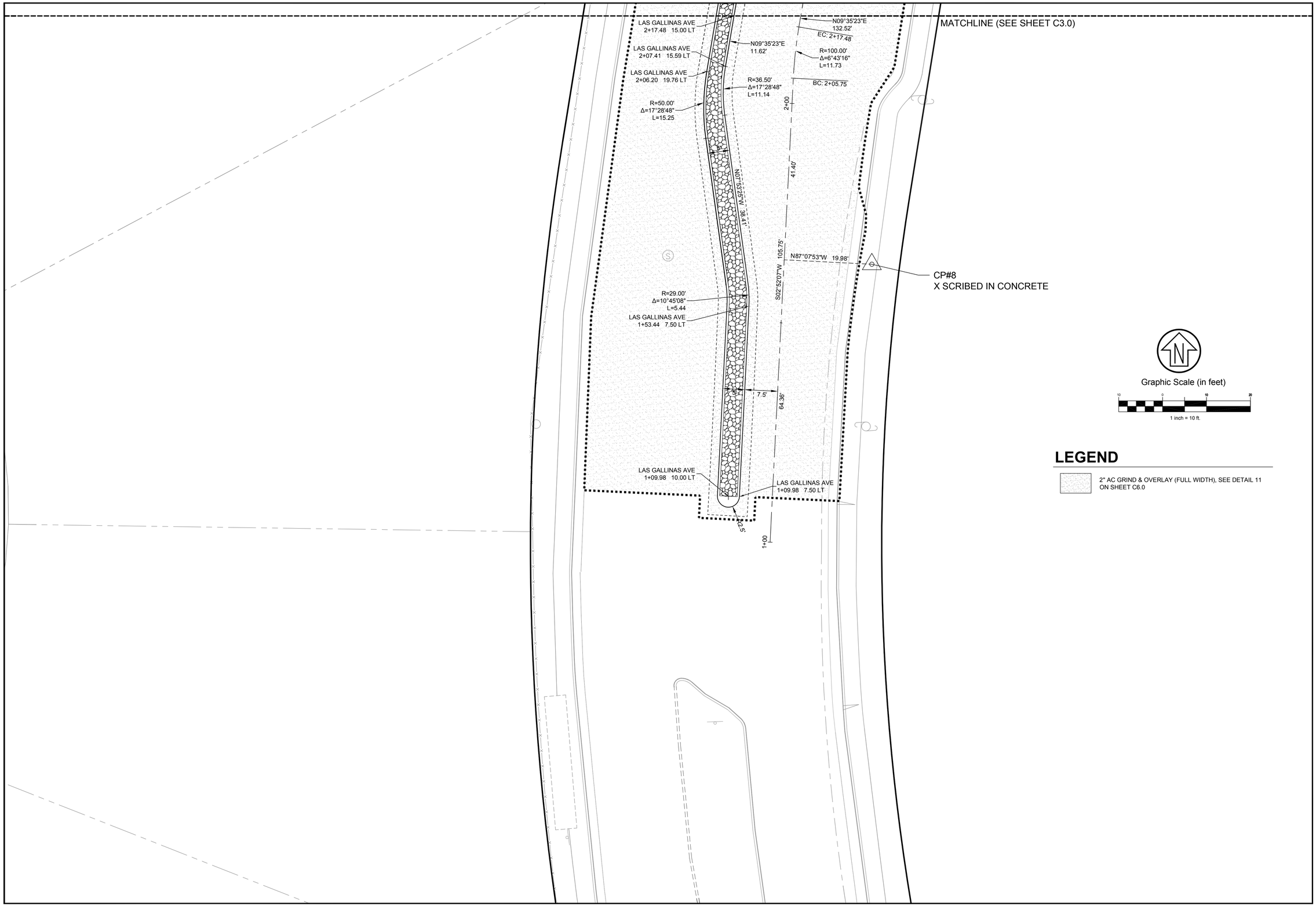

NO.	REVISION	BY	DATE
1	35% CD	RJS	02-20-15
2	65% CD	RJS	05-06-15
3	95% CD	RJS	09-28-15
4	100% CD	RJS	01-05-17
			DATE

DESIGNED RJS
DRAWN SAS
CHECKED RJS
APPROVED DATE

PROJECT NAME
FREITAS PKWY & LAS GALLINAS INTERSECTION IMP PROJECT

DRAWING NAME
HORIZONTAL CONTROL & AC OVERLAY
MANUEL T. FRIETAS PARKWAY SOUTH OF INTERSECTION
SAN RAFAEL COUNTY OF MARIN CALIFORNIA

REGISTERED PROFESSIONAL ENGINEER
RICHARD J. SOUZA
No. 67892
CIVIL
STATE OF CALIFORNIA

CSW|ST2
CSW/Stuber-Stroeh Engineering Group, Inc.
45 Leveroni Court
Novato, CA 94949
tel: 415.883.6850
fax: 415.883.9835
Civil & Structural Engineers
Surveying & Mapping
Electrical Engineering
Construction Management

CITY OF SAN RAFAEL
DEPARTMENT OF PUBLIC WORKS

SCALE: 1" = 10'
DATE: 2-16-16
CITY PROJECT NO.: 11171
SHEET NO.: C3.3
DRAWING: 10 OF 36

GRADING & DRAINAGE KEYNOTES

1	NEW CASE "A" CURB RAMP PER REVISED STANDARD PLAN A88A.
2	PROTECT IN PLACE EXISTING JOINT POLE.
3	PROTECT IN PLACE EXISTING UTILITY STRUCTURE AND ADJUST TO FINISH GRADE AS NEEDED.
4	NEW TYPE "A" CURB AND GUTTER PER MARIN COUNTY UCS DWG. NO. 105. SEE DETAIL 7 ON SHEET C6.0.
5	2' WIDE CURB CUT INLET, SEE DETAIL 5 ON SHEET C6.0.
6	NEW CULVERT BRIDGE BELOW SURFACE IMPROVEMENTS, SEE STRUCTURAL PLANS
7	NEW RETAINING WALL, SEE STRUCTURAL PLANS. XX.X DENOTES RETAINED WALL HEIGHT AND SIDE
8	NEW TYPE "E" CURB PER MARIN COUNTY UCS DWG. NO. 105. SEE DETAIL 8 ON SHEET C6.0 FOR MODIFICATIONS.
9	NEW MODIFIED CASE "A" CURB RAMP
10	NEW MODIFIED CASE "C" CURB RAMP
11	NEW TYPE "E" CATCH BASIN PER MARIN COUNTY UCS 235 WITH 3' GALLERY INLETS
12	CONTRACTOR TO PLUG EXISTING SIDE OPENING WITH CONCRETE, CONCRETE SHALL BE DOWELED IN PLACE. ADJUST TOP OF STRUCTURE TO MATCH EX. BACK OF CURB AND TOP OF TREATMENT BASIN.
13	CONNECT NEW STORM DRAIN PIPE NEW MARIN COUNTY TYPE "B" MANHOLE, CONTRACTOR TO MATCH INVERT OF EXISTING PIPE OUT FOR NEW INVERT IN.

GRADING & DRAINAGE KEYNOTES

14	CONNECT NEW STORM DRAIN TO EXISTING WITH CONCRETE COLLAR AND WRAPPED BEND IF REQUIRED, SEE DETAIL 4 ON SHEET C6.0. CONTRACTOR TO VERIFY SIZE, DEPTH AND MATERIAL FOR CONNECTION.
15	RELOCATE WATER BOX, CONTRACTOR TO COORDINATE FINAL LOCATION AND MOVE WITH MMWD.
16	6" WIDE CURB CUT INLETS EVERY 20' AS SHOWN ON PLAN.
17	EXISTING AT&T CONDUIT TO BE MODIFIED BY AT&T. CONTRACTOR TO COORDINATE WORK WITH AT&T.
18	NEW ARBOR AND BENCH, SEE DETAIL 15 ON SHEET C6.0 (ADD ALTERNATE 1)
	NEW AC PAVEMENT SECTION AND SAWCUT LIMITS. SEE PLANS FOR EXTENTS.
	NEW SIDEWALK PER MARIN COUNTY UCS DWG. NO. 105 TYPE "A" OR TYPE "B". SEE DETAIL 2 ON SHEET C6.0, WIDTH VARIES.

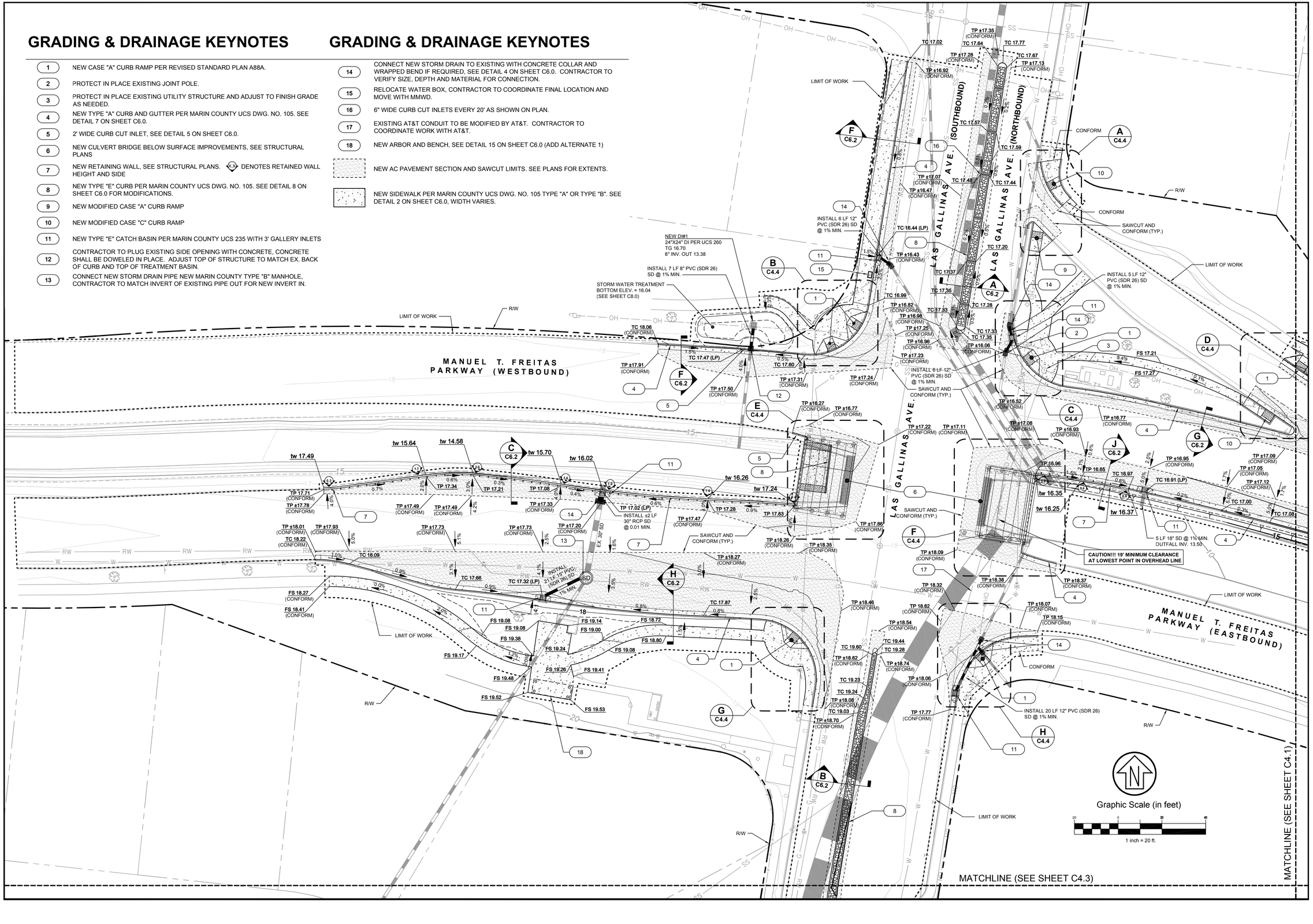

NO.	REVISION	BY	DATE
1	35% CD	RJS	02-20-15
2	65% CD	RJS	05-06-15
3	95% CD	RJS	09-28-15
4	100% CD	RJS	01-05-17

DESIGNED	RJS	DATE
DRAWN	SAS	
CHECKED	RJS	
APPROVED		DATE

PROJECT NAME
FREITAS PKWY & LAS GALLINAS INTERSECTION IMP PROJECT

DRAWING NAME
GRADING & DRAINAGE PLAN
MANUEL T. FREITAS PARKWAY
LAS GALLINAS AVE INTERSECTION
SAN RAFAEL COUNTY OF MARIN CALIFORNIA

REGISTERED PROFESSIONAL ENGINEER
RICHARD J. SOUZA
No. 67892
CIVIL
STATE OF CALIFORNIA

CSW ST2
CSW/Stuber-Stroeh Engineering Group, Inc.
45 Leveroni Court
Novato, CA 94949
tel: 415.883.9850
fax: 415.883.9858
Civil & Structural Engineers
Surveying & Mapping
Electrical & Mechanical
Construction Management

CITY OF SAN RAFAEL
DEPARTMENT OF PUBLIC WORKS

SCALE:	1" = 20'
DATE:	2-16-16
CITY PROJECT NO.:	11171
SHEET NO.:	C4.0
DRAWING:	11 OF 36

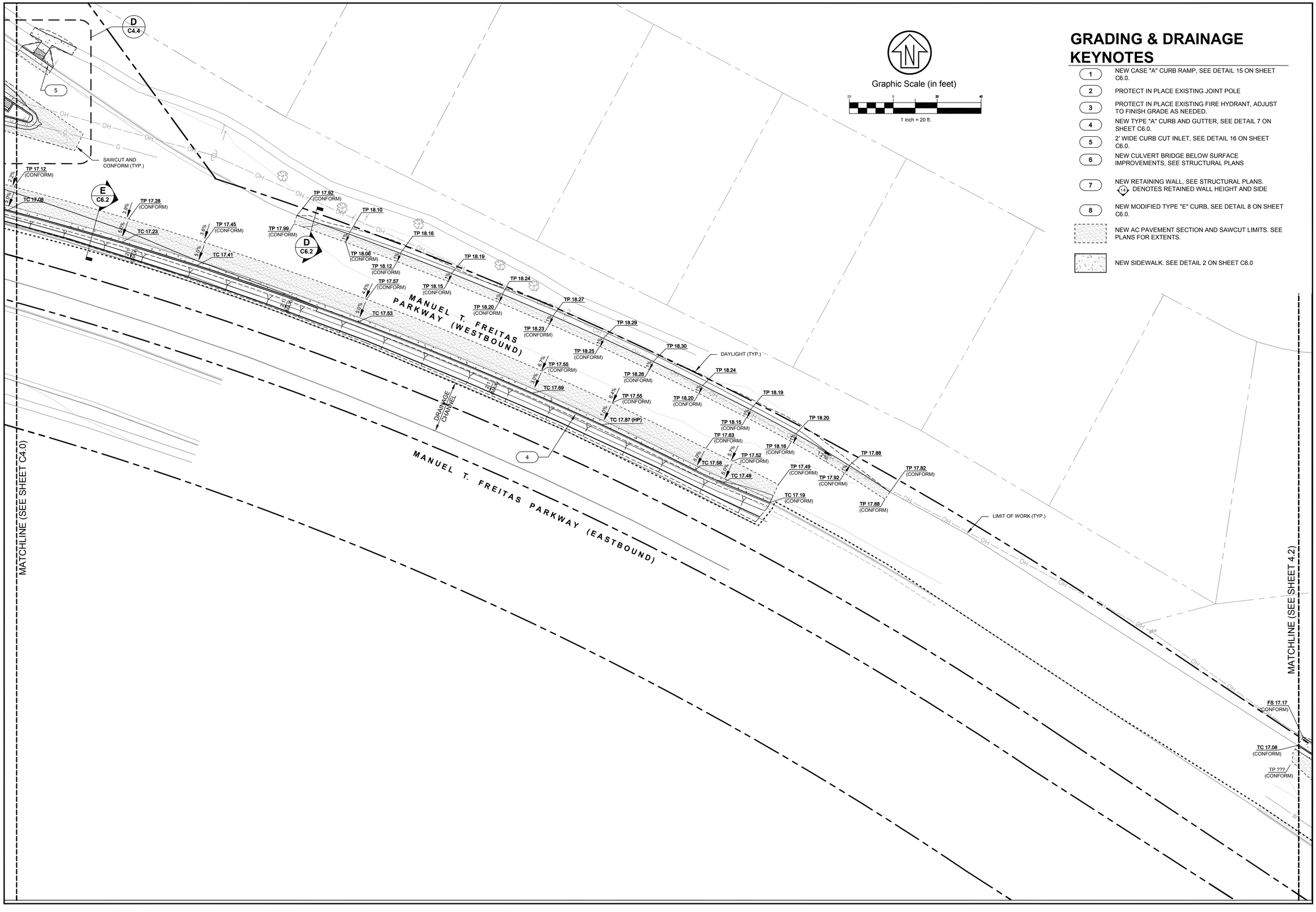

GRADING & DRAINAGE KEYNOTES

1. NEW CASE "A" CURB RAMP, SEE DETAIL 15 ON SHEET C6.0.
2. PROTECT IN PLACE EXISTING JOINT POLE
3. PROTECT IN PLACE EXISTING FIRE HYDRANT, ADJUST TO FINISH GRADE AS NEEDED.
4. NEW TYPE "A" CURB AND GUTTER, SEE DETAIL 7 ON SHEET C6.0.
5. 2' WIDE CURB CUT INLET, SEE DETAIL 16 ON SHEET C6.0.
6. NEW CULVERT BRIDGE BELOW SURFACE IMPROVEMENTS, SEE STRUCTURAL PLANS
7. NEW RETAINING WALL, SEE STRUCTURAL PLANS. (x.x) DENOTES RETAINED WALL HEIGHT AND SIDE
8. NEW MODIFIED TYPE "E" CURB, SEE DETAIL 8 ON SHEET C6.0.

NEW AC PAVEMENT SECTION AND SAWCUT LIMITS. SEE PLANS FOR EXTENTS.

NEW SIDEWALK. SEE DETAIL 2 ON SHEET C6.0

NO.	REVISION	BY	DATE
1	35% CD	RJS	02-20-15
2	65% CD	RJS	05-06-15
3	95% CD	RJS	09-28-15
4	100% CD	RJS	01-05-17

		DATE
DESIGNED	RJS	
DRAWN	SAS	
CHECKED	RJS	
APPROVED		

PROJECT NAME
FREITAS PKWY & LAS GALLINAS INTERSECTION IMP PROJECT

DRAWING NAME
GRADING & DRAINAGE PLAN
MANUEL T. FRIETAS PARKWAY EAST OF INTERSECTION
SAN RAFAEL COUNTY OF MARIN CALIFORNIA

REGISTERED PROFESSIONAL ENGINEER
RICHARD J. SOUZA
No. 67892
CIVIL
STATE OF CALIFORNIA

CSW ST2
CSW/Stuber-Stroeh Engineering Group, Inc.
45 Leveroni Court
Novato, CA 94949
tel: 415.883.9850
fax: 415.883.9835
Civil & Structural Engineers
Surveying & Mapping
Environmental Planning
Construction Management

CITY OF SAN RAFAEL
DEPARTMENT OF PUBLIC WORKS

SCALE: 1" = 20'
DATE: 2-16-16
CITY PROJECT NO.: 11171
SHEET NO.: C4.1
DRAWING: 12 OF 36

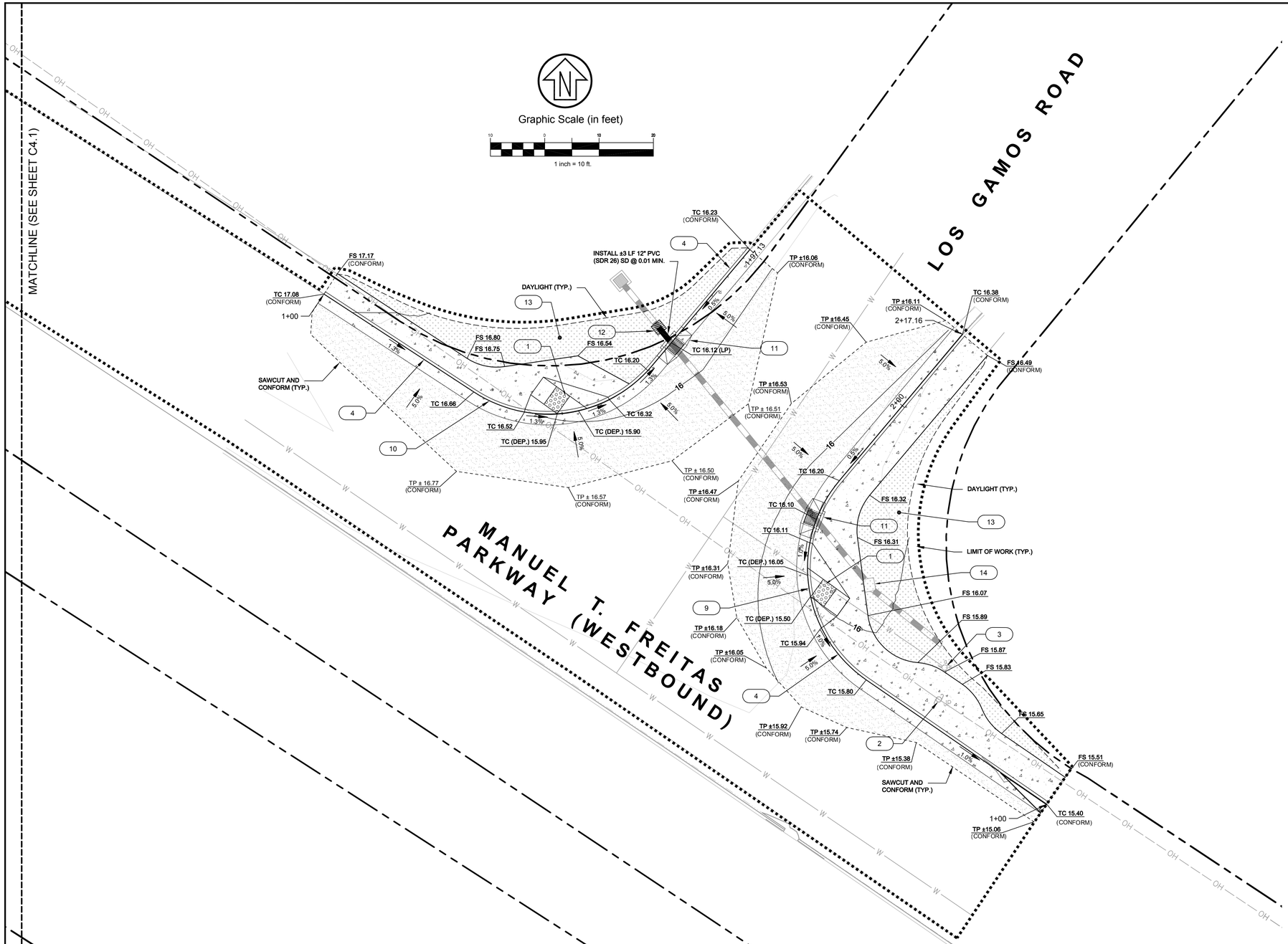

GRADING & DRAINAGE KEYNOTES

1. NEW CASE "A" CURB RAMP, SEE DETAIL 15 ON SHEET C6.0.
2. PROTECT IN PLACE EXISTING JOINT POLE
3. PROTECT IN PLACE EXISTING FIRE HYDRANT.
4. NEW TYPE "A" CURB AND GUTTER, SEE DETAIL 7 ON SHEET C6.0.
5. 2' WIDE CURB CUT INLETS, SEE DETAIL 16 ON SHEET C6.0.
6. NEW CULVERT BRIDGE BELOW SURFACE IMPROVEMENTS, SEE STRUCTURAL PLANS
7. NEW WALL, SEE STRUCTURAL PLANS. ◇18◇ DENOTES RETAINED WALL HEIGHT AND SIDE
8. NEW MODIFIED TYPE "E" CURB, SEE DETAIL 8 ON SHEET C6.0.
9. SEE SHEET C6.1 FOR LOS GAMOS CURB RETURN EAST TOP OF CURB PROFILE
10. SEE SHEET C6.1 FOR LOS GAMOS CURB RETURN WEST TOP OF CURB PROFILE
11. NEW TYPE "E" CATCH BASIN PER MARIN COUNTY UCS, CONTRACTOR SHALL MATCH FLOWLINE OF EXISTING PIPE WITH 3' GALLERY INLET.
12. CONNECT NEW STORM DRAIN TO EXISTING WITH CONCRETE COLLAR AND WRAPPED BEND IF REQUIRED, SEE DETAIL 4 ON SHEET C6.0. CONTRACTOR TO VERIFY SIZE, DEPTH AND MATERIAL FOR CONNECTION.
13. INSTALL 3" MULCH WITH REDWOOD HEADER ±870 SF, SEE DETAIL 1 BELOW.
14. CONTRACTOR ADJUST TOP OF BOX TO FINISH GRADE AND REPLACE WITH CHECKERED PLATE LID PER MARIN COUNTY UCS STD. 260.

NEW AC PAVEMENT SECTION PER DETAIL 1 ON SHEET C6.0, AND SAWCUT LIMITS. SEE PLANS FOR EXTENTS.

NEW SIDEWALK. SEE DETAIL 2 ON SHEET C6.0

NEW MULCH WITH REDWOOD HEADER

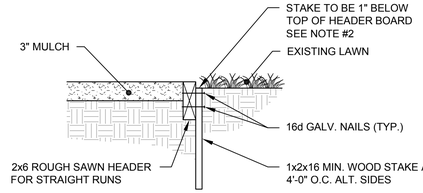

NOTES:
1. ALL WOOD TO BE ROUGH SAWN REDWOOD CONST. GRADE.
2. FINISH GRADE OF PLANTING AREA 1" BELOW TOP OF HEADER.
3. TAPER FINISH GRADE TO 1" WITHIN 4'-0" OF HEADER BOARD.

HEADER DETAIL

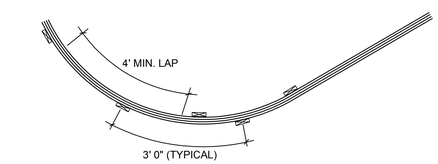

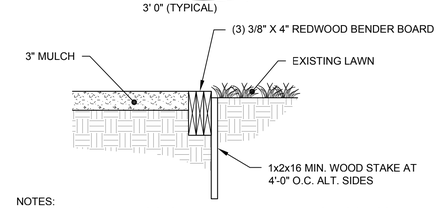

NOTES:
1. 3 OR MORE HEADERS SHOULD BE LAMINATED, WITH JOINTS STAGGERED A MINIMUM OF 48" APART.
2. LAMINATIONS SHOULD BE SCREWED A MINIMUM OF 12" APART.
3. STAKES SHOULD BE PLACED A MIMIMUM OF 3' ON CENTER AND AT EACH JOINT, AND SECURLY SCREWED TO THE HEADER.

BENDER BOARD DETAIL

1 REDWOOD HEADER & BENDER BOARD
SCALE: NTS

BID ALTERNATE NO. 1

NO.	REVISION	BY	DATE
1	35% CD	RJS	02-20-15
2	65% CD	RJS	05-06-15
3	95% CD	RJS	09-28-15
4	100% CD	RJS	01-05-17

		DATE
DESIGNED	RJS	
DRAWN	SAS	
CHECKED	RJS	
APPROVED		

PROJECT NAME
FREITAS PKWY & LAS GALLINAS INTERSECTION IMP PROJECT

DRAWING NAME
GRADING & DRAINAGE PLAN
MANUEL T. FRIETAS PARKWAY
LOS GAMOS ROAD INTERSECTION
SAN RAFAEL COUNTY OF MARIN CALIFORNIA

REGISTERED PROFESSIONAL ENGINEER
RICHARD J. SOUZA
No. 67892
CIVIL
STATE OF CALIFORNIA

CSW ST2
CSW/Stuber-Stroeh Engineering Group, Inc.
45 Leveroni Court
Novato, CA 94949
tel: 415.883.9850
fax: 415.883.9835
Civil & Structural Engineers
Surveying & Mapping
Electrical Engineering
Construction Management

CITY OF SAN RAFAEL
DEPARTMENT OF PUBLIC WORKS

SCALE: 1" = 10'
DATE: 2-16-16
CITY PROJECT NO.: 11171
SHEET NO.: C4.2
DRAWING: 13 OF 36

GRADING & DRAINAGE KEYNOTES

1. NEW CASE "A" CURB RAMP, SEE DETAIL 15 ON SHEET C6.0.
2. PROTECT IN PLACE EXISTING JOINT POLE
3. PROTECT IN PLACE EXISTING FIRE HYDRANT, ADJUST TO FINISH GRADE AS NEEDED.
4. NEW TYPE "A" CURB AND GUTTER, SEE DETAIL 7 ON SHEET C6.0.
5. 2' WIDE CURB CUT INLETS, SEE DETAIL 16 ON SHEET C6.0.
6. NEW CULVERT BRIDGE BELOW SURFACE IMPROVEMENTS, SEE STRUCTURAL PLANS
7. NEW WALL, SEE STRUCTURAL PLANS. (1.0) DENOTES RETAINED WALL HEIGHT AND SIDE
8. NEW MODIFIED TYPE "E" CURB, SEE DETAIL 8 ON SHEET C6.0.

NEW AC PAVEMENT SECTION AND SAWCUT LIMITS. SEE PLANS FOR EXTENTS.

NEW SIDEWALK. SEE DETAIL 2 ON SHEET C6.0

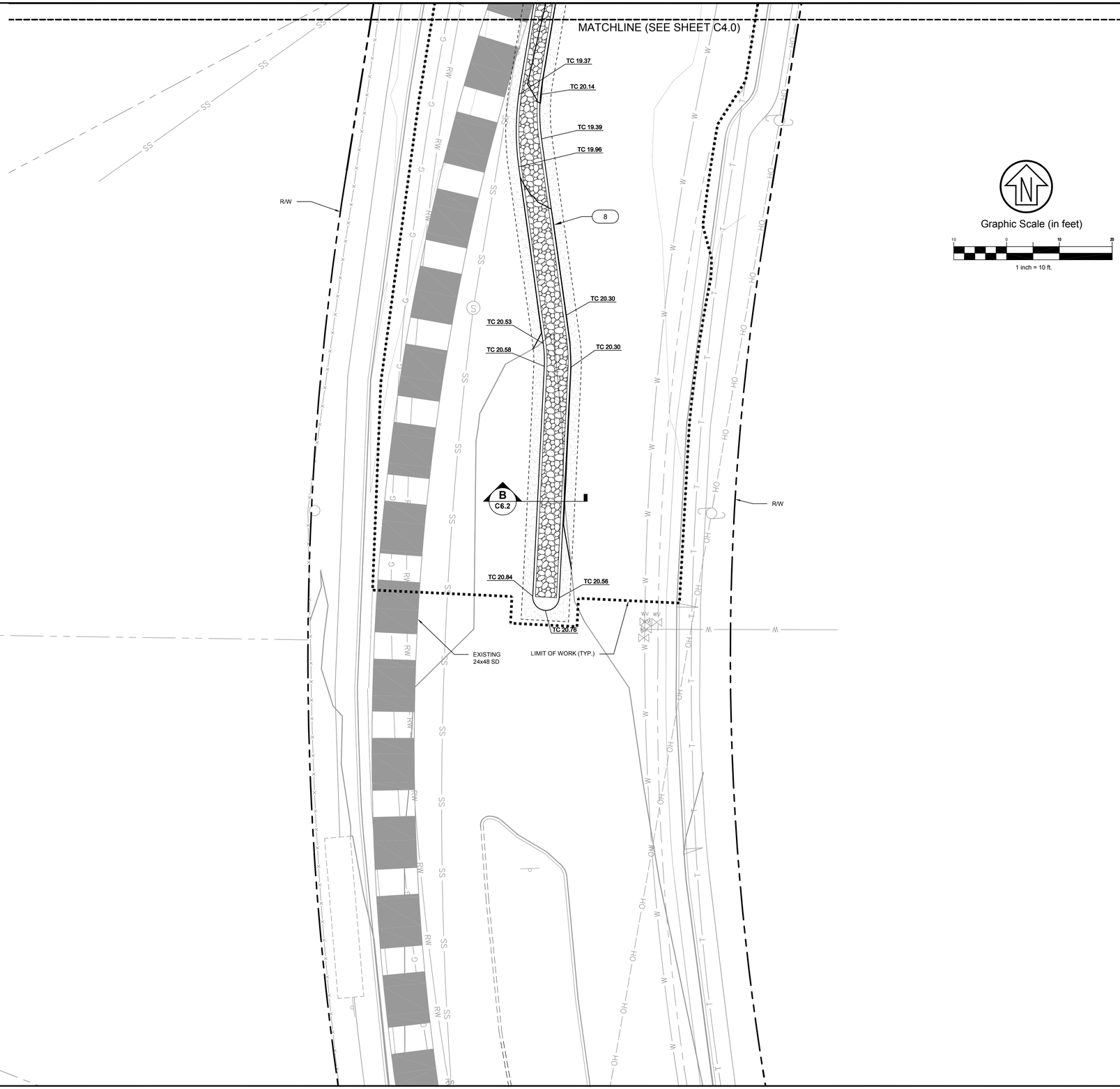

NO.	REVISION	BY	DATE
1	35% CD	RJS	02-20-15
2	65% CD	RJS	05-06-15
3	95% CD	RJS	09-28-15
4	100% CD	RJS	01-05-17
			DATE

DESIGNED RJS
DRAWN SAS
CHECKED RJS
APPROVED
DATE

PROJECT NAME
FREITAS PKWY & LAS GALLINAS INTERSECTION IMP PROJECT
SAN RAFAEL COUNTY OF MARIN CALIFORNIA

DRAWING NAME
GRADING & DRAINAGE PLAN
MANUEL T. FRIETAS PARKWAY
SOUTH OF INTERSECTION

REGISTERED PROFESSIONAL ENGINEER
RICHARD J. SOUZA
No. 67892
CIVIL
STATE OF CALIFORNIA

CSW|ST2
CSW/Stuber-Stroeh Engineering Group, Inc.
45 Leveroni Court
Novato, CA 94949
tel: 415.883.9850
fax: 415.883.9835
Civil & Structural Engineers
Surveying & Mapping
Environmental Planning
Construction Management

CITY OF SAN RAFAEL
DEPARTMENT OF
PUBLIC WORKS

SCALE: 1" = 10'
DATE: 2-16-16
CITY PROJECT NO.: 11171
SHEET NO.: C4.3
DRAWING: 14 OF 36

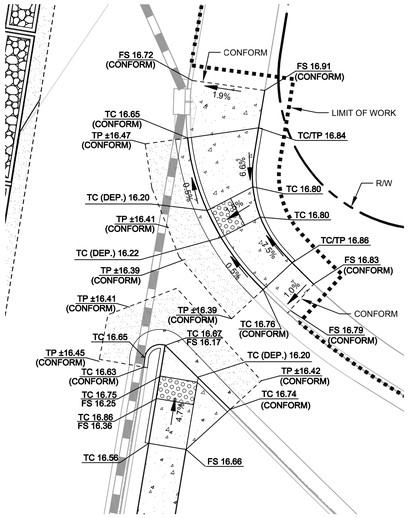

A NE ADA RAMPS
SCALE: 1" = 10'

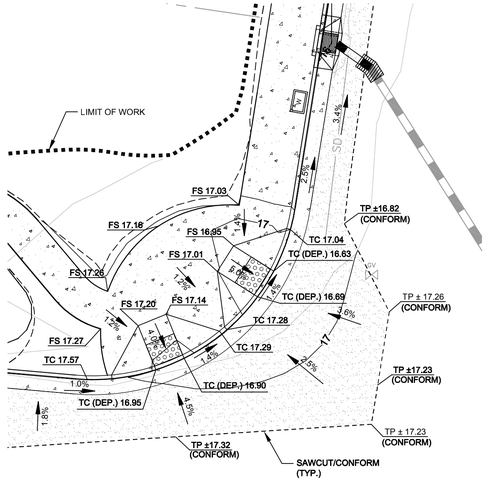

B NW CORNER
SCALE: 1" = 10'

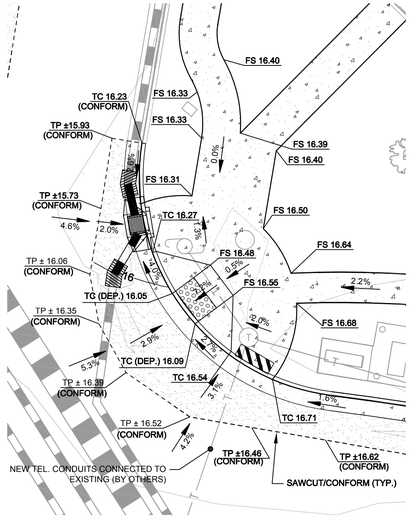

C NE CORNER
SCALE: 1" = 10'

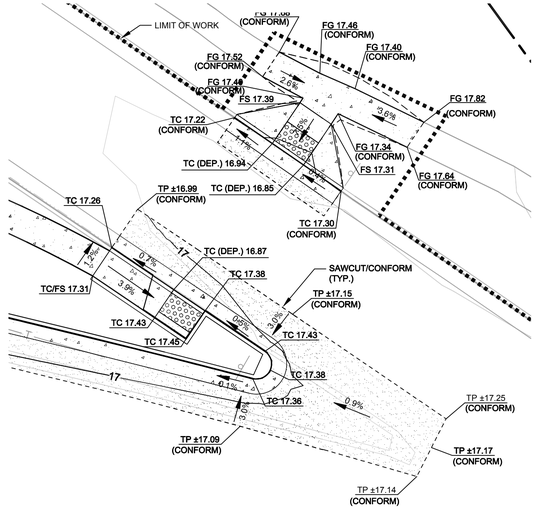

D EAST ADA RAMPS
SCALE: 1" = 10'

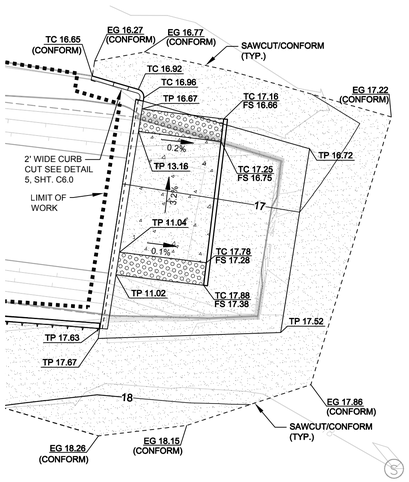

E BRIDGE (WEST)
SCALE: 1" = 10'

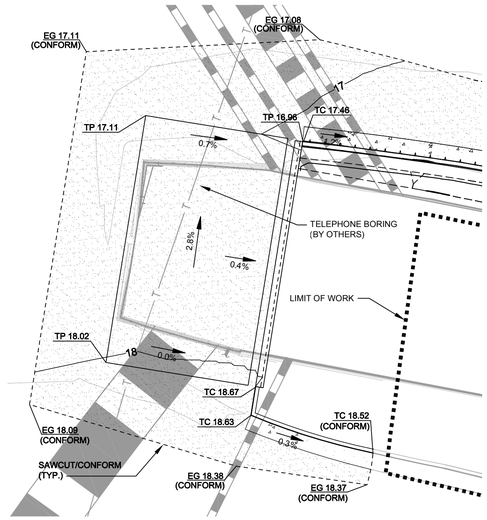

F BRIDGE (EAST)
SCALE: 1" = 10'

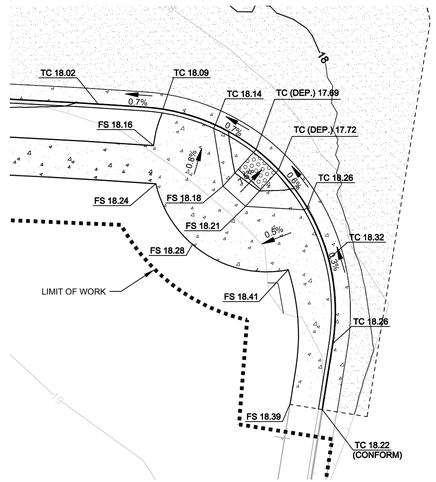

G SW CORNER
SCALE: 1" = 10'

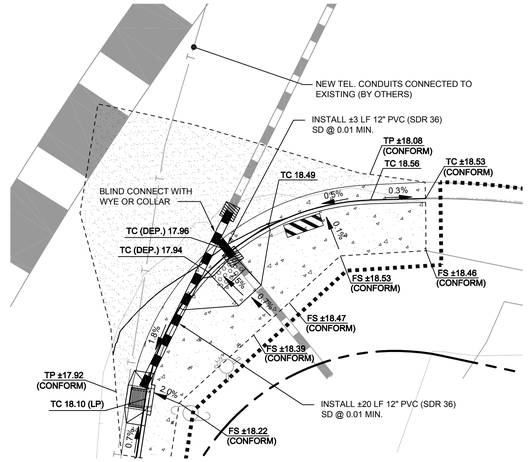

H SE CORNER
SCALE: 1" = 10'

NO.	REVISION	BY	DATE
1	35% CD	RJS	02-20-15
2	65% CD	RJS	05-06-15
3	95% CD	RJS	09-28-15
4	100% CD	RJS	01-05-17
			DATE

DESIGNED RJS
DRAWN SAS
CHECKED RJS
APPROVED DATE

PROJECT NAME
FREITAS PKWY & LAS GALLINAS INTERSECTION IMP PROJECT

DRAWING NAME
GRADING & DRAINAGE PLAN
MANUEL T. FRIETAS PARKWAY
GRADING DETAILS
SAN RAFAEL COUNTY OF MARIN CALIFORNIA

REGISTERED PROFESSIONAL ENGINEER
RICHARD J. SOUZA
No. 67892
CIVIL
STATE OF CALIFORNIA

CSW ST2
CSW/Stuber-Stroeh Engineering Group, Inc.
45 Leveroni Court
Novato, CA 94949
tel: 415.883.9850
fax: 415.883.9835
Civil & Structural Engineers
Surveying & Mapping
Electrical Engineering
Construction Management

CITY OF SAN RAFAEL
DEPARTMENT OF PUBLIC WORKS

SCALE: as shown
DATE: 2-16-16
CITY PROJECT NO.: 11171
SHEET NO.: C4.4
DRAWING: 15 OF 36

KEYNOTES

1. INSTALL CALTRANS TYPE IV (L) ARROW
2. INSTALL CALTRANS TYPE IV (R) ARROW
3. INSTALL CALTRANS TYPE V ARROW (24')
4. INSTALL NEW CROSSWALK STRIPING PER CALTRANS STD PLAN A24E AS SHOWN (10' O.C. YELLOW PAINTED LIMIT LINES TYP.)
5. INSTALL NEW LANE MARKERS AND STRIPING AS SHOWN AND AS NEEDED PER DETAIL 38 CALTRANS STD PLAN A20D. SEE PLAN FOR LENGTH
6. INSTALL SALVAGED SIGN PER SAN RAFAEL CITY STD. SEE PLANS FOR SPECIFIED CALIFORNIA (CA) SIGN CODE.
7. INSTALL SIGN PER SAN RAFAEL CITY STD. SEE PLANS FOR SPECIFIED CALIFORNIA (CA) SIGN CODE.
8. INSTALL NEW BIKE LANE STRIPING AS SHOWN. 6" WHITE LINE PER DETAIL 39 CALTRANS STD PLAN A20D. SEE PLAN FOR LENGTH
9. INSTALL NEW WORD PAVEMENT MARKINGS. ALL LETTERS AND NUMERALS SHOULD BE APPROVED BY CALTRANS AND IN CONFORMANCE WITH CALTRANS STD.
10. INSTALL CALTRANS BIKE LANE ARROW
11. INSTALL NEW BIKE LANE STRIPING AS SHOWN. 6" WHITE LINE PER DETAIL 39A CALTRANS STD PLAN A20D. SEE PLAN FOR LENGTH
12. INSTALL NEW LANE MARKERS AND STRIPING AS SHOWN AND AS NEEDED PER DETAIL 9 CALTRANS STD PLAN A20A. SEE PLAN FOR LENGTH
13. INSTALL EDGE STRIPING AS SHOWN AND AS NEEDED PER DETAIL 21 CALTRANS STD PLAN A20A. SEE PLAN FOR LENGTH
14. INSTALL CALTRANS TYPE III (L) ARROW
15. INSTALL CALTRANS TYPE I ARROW
16. PAINT NOSE PORTION OF CURB USING YELLOW PAINT. SEE PLANS FOR LOCATION.
17. INSTALL PEDESTRIAN BARRICADES. SEE DETAIL 13, SHEET C6.0.
18. PAINT CURB USING RED PAINT. SEE PLANS FOR LENGTH.
19. PAINT CURB YELLOW

LIMITS OF WORK

PAINTED RED CURB. SEE PLANS FOR EXTENTS.

NOTES

1. ALL STRIPING SHALL BE THERMOPLASTIC MARKING UNLESS STATED OTHERWISE.

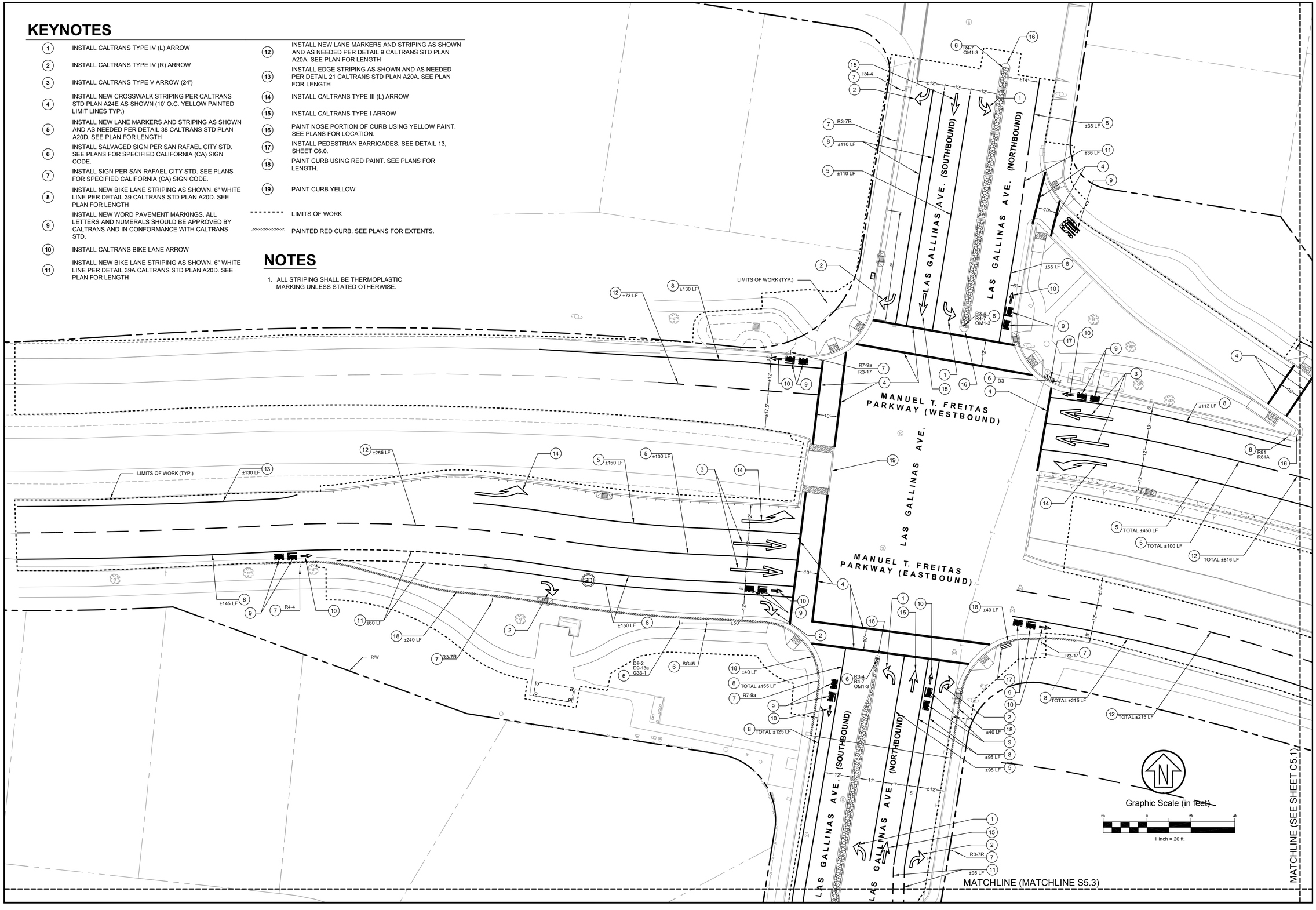

NO.	REVISION	BY	DATE
1	35% CD	RJS	02-20-15
2	65% CD	RJS	05-06-15
3	95% CD	RJS	09-28-15
4	100% CD	RJS	01-05-17

		DATE
DESIGNED	RJS	
DRAWN	SAS	
CHECKED	RJS	
APPROVED		

PROJECT NAME
FREITAS PKWY & LAS GALLINAS INTERSECTION IMP PROJECT

DRAWING NAME
SIGNING & STRIPING
MANUEL T. FREITAS PARKWAY
LAS GALLINAS INTERSECTION
SAN RAFAEL COUNTY OF MARIN CALIFORNIA

REGISTERED PROFESSIONAL ENGINEER
RICHARD J. SOUZA
No. 67892
CIVIL
STATE OF CALIFORNIA

CSW ST2
CSW/Stuber-Stroeh Engineering Group, Inc.
45 Leveroni Court
Novato, CA 94949
tel 415.883.9850
fax 415.883.9835
Civil & Structural Engineers
Surveying & Mapping
Electrical Engineering
Construction Management

CITY OF SAN RAFAEL
DEPARTMENT OF
PUBLIC WORKS

SCALE: 1" = 20'
DATE: 2-16-16
CITY PROJECT NO.: 11171
SHEET NO.: C5.0
DRAWING: 16 OF 36

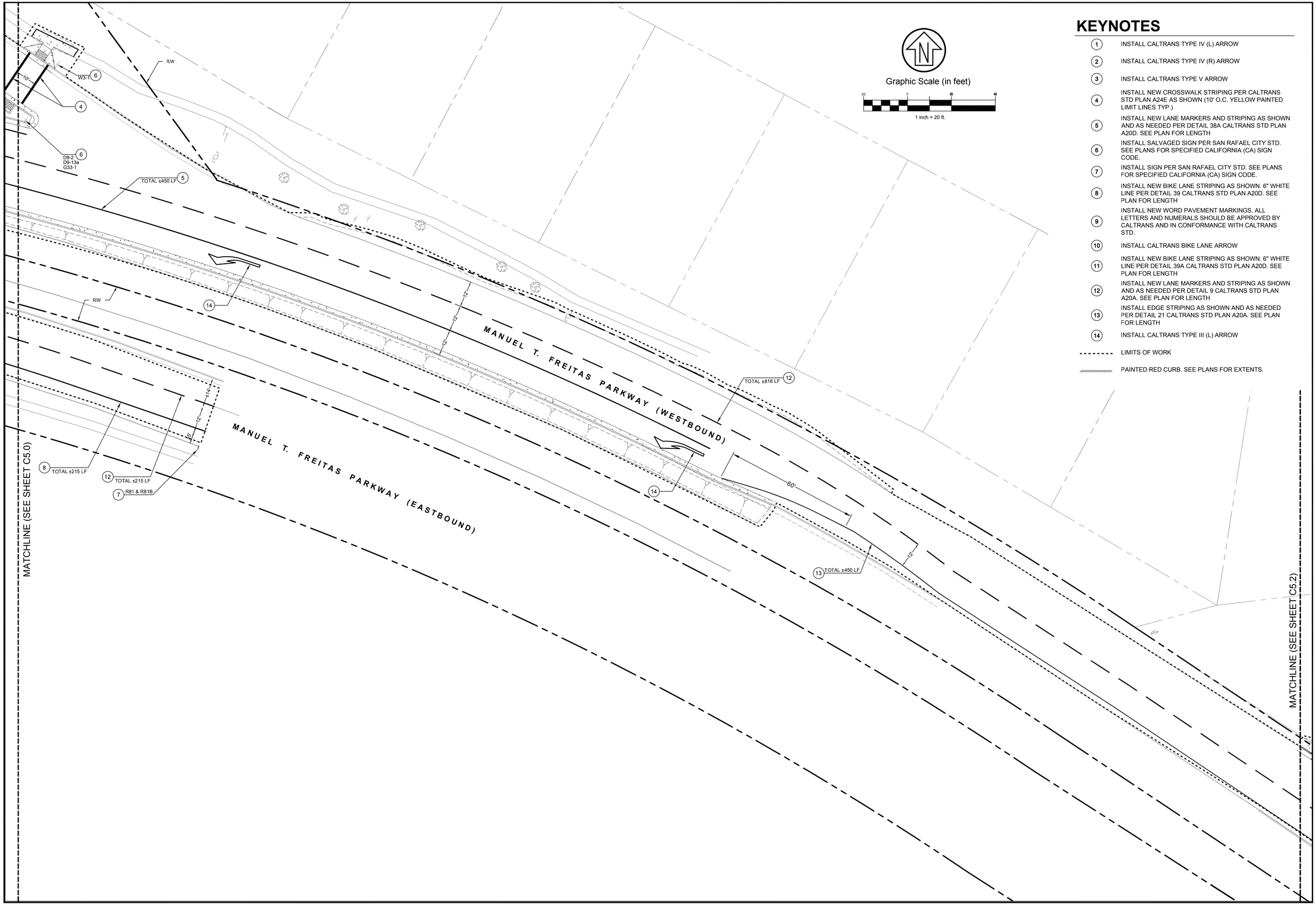

KEYNOTES

1. INSTALL CALTRANS TYPE IV (L) ARROW
2. INSTALL CALTRANS TYPE IV (R) ARROW
3. INSTALL CALTRANS TYPE V ARROW
4. INSTALL NEW CROSSWALK STRIPING PER CALTRANS STD PLAN A24E AS SHOWN (10' O.C. YELLOW PAINTED LIMIT LINES TYP.)
5. INSTALL NEW LANE MARKERS AND STRIPING AS SHOWN AND AS NEEDED PER DETAIL 38A CALTRANS STD PLAN A20D. SEE PLAN FOR LENGTH
6. INSTALL SALVAGED SIGN PER SAN RAFAEL CITY STD. SEE PLANS FOR SPECIFIED CALIFORNIA (CA) SIGN CODE.
7. INSTALL SIGN PER SAN RAFAEL CITY STD. SEE PLANS FOR SPECIFIED CALIFORNIA (CA) SIGN CODE.
8. INSTALL NEW BIKE LANE STRIPING AS SHOWN, 6" WHITE LINE PER DETAIL 39 CALTRANS STD PLAN A20D. SEE PLAN FOR LENGTH
9. INSTALL NEW WORD PAVEMENT MARKINGS. ALL LETTERS AND NUMERALS SHOULD BE APPROVED BY CALTRANS AND IN CONFORMANCE WITH CALTRANS STD.
10. INSTALL CALTRANS BIKE LANE ARROW
11. INSTALL NEW BIKE LANE STRIPING AS SHOWN, 6" WHITE LINE PER DETAIL 39A CALTRANS STD PLAN A20D, SEE PLAN FOR LENGTH
12. INSTALL NEW LANE MARKERS AND STRIPING AS SHOWN AND AS NEEDED PER DETAIL 9 CALTRANS STD PLAN A20A. SEE PLAN FOR LENGTH
13. INSTALL EDGE STRIPING AS SHOWN AND AS NEEDED PER DETAIL 21 CALTRANS STD PLAN A20A. SEE PLAN FOR LENGTH
14. INSTALL CALTRANS TYPE III (L) ARROW

LIMITS OF WORK

PAINTED RED CURB. SEE PLANS FOR EXTENTS.

NO.	REVISION	BY	DATE
1	35% CD	RJS	02-20-15
2	65% CD	RJS	05-06-15
3	95% CD	RJS	09-28-15
4	100% CD	RJS	01-05-17
			DATE

DESIGNED RJS
DRAWN SAS
CHECKED RJS
APPROVED DATE

PROJECT NAME
FREITAS PKWY & LAS GALLINAS INTERSECTION IMP PROJECT

DRAWING NAME
SIGNING & STRIPING
MANUEL T. FRIETAS PARKWAY EAST OF INTERSECTION
SAN RAFAEL COUNTY OF MARIN CALIFORNIA

REGISTERED PROFESSIONAL ENGINEER
RICHARD J. SOUZA
No. 67892
CIVIL
STATE OF CALIFORNIA

CSW/ST2
CSW/Stuber-Stroeh Engineering Group, Inc.
45 Leveroni Court
Novato, CA 94949
tel: 415.883.8850
fax: 415.883.8858
Civil & Structural Engineers
Surveying & Mapping
Electrical & Mechanical
Construction Management

CITY OF SAN RAFAEL
DEPARTMENT OF PUBLIC WORKS

SCALE: 1" = 20'
DATE: 2-16-16
CITY PROJECT NO.: 11171
SHEET NO.: C5.1
DRAWING: 17 OF 36

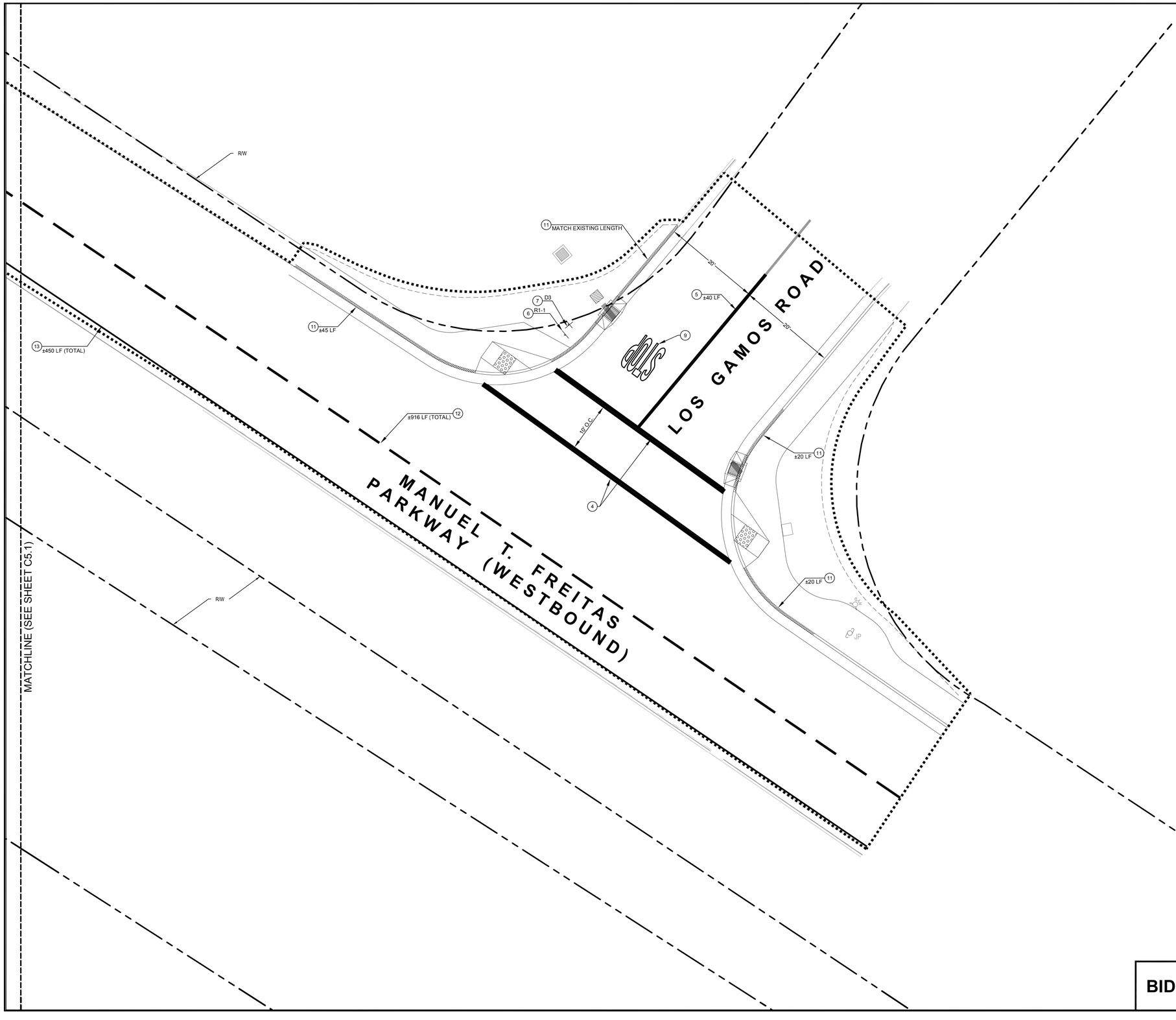

KEYNOTES

1. INSTALL CALTRANS TYPE IV (L) ARROW
2. INSTALL CALTRANS TYPE IV (R) ARROW
3. INSTALL CALTRANS TYPE V ARROW
4. INSTALL NEW CROSSWALK STRIPING PER CALTRANS STD PLAN A24E AS SHOWN
5. INSTALL CENTER LINE STRIPE PER CALTRANS STD PLAN A20A, DETAIL 22. SEE PLAN FOR LENGTH
6. INSTALL SALVAGED STOP SIGN
7. INSTALL SALVAGED STREET SIGN
8. INSTALL NEW BIKE LANE STRIPING AS SHOWN. 6" WHITE LINE PER DETAIL 39 CALTANS STD PLAN A20D. SEE PLAN FOR LENGTH
9. INSTALL NEW WORD PAVEMENT MARKINGS. ALL LETTERS AND NUMERALS SHOULD BE APPROVED BY CALTRANS AND IN CONFORMANCE WITH CALTRANS STD.
10. INSTALL CALTRANS BIKE LANE ARROW
11. PAINT CURB USING RED PAINT. SEE PLANS FOR LENGTH.
12. INSTALL NEW LANE MARKERS AND STRIPING AS SHOWN AND AS NEEDED PER DETAIL 9 CALTRANS STD PLAN A20A. SEE PLAN FOR LENGTH
13. INSTALL EDGE STRIPING AS SHOWN AND AS NEEDED PER DETAIL 21 CALTRANS STD PLAN A20A. SEE PLAN FOR LENGTH

LIMITS OF WORK

PAINTED RED CURB. SEE PLANS FOR EXTENTS.

Graphic Scale (in feet)

10 0 10 20

1 inch = 10 ft.

BID ALTERNATE NO. 1

NO.	REVISION	BY	DATE
1	35% CD	RJS	02-20-15
2	65% CD	RJS	05-06-15
3	95% CD	RJS	09-28-15
4	100% CD	RJS	01-05-17

		DATE
DESIGNED	RJS	
DRAWN	SAS	
CHECKED	RJS	
APPROVED		

PROJECT NAME
FREITAS PKWY & LAS GALLINAS INTERSECTION IMP PROJECT

DRAWING NAME
SIGNING & STRIPING
MANUEL T. FRIETAS PARKWAY
LOS GAMOS ROAD INTERSECTION
SAN RAFAEL COUNTY OF MARIN CALIFORNIA

REGISTERED PROFESSIONAL ENGINEER
RICHARD J. SOUZA
No. 67892
CIVIL
STATE OF CALIFORNIA

CSW/ST2
CSW/Stuber-Stroeh Engineering Group, Inc.
45 Leveroni Court
Novato, CA 94949
tel: 415.883.0850
fax: 415.883.9835
Civil & Structural Engineers
Surveying & Mapping
Electrical Engineering
Construction Management

CITY OF SAN RAFAEL
DEPARTMENT OF
PUBLIC WORKS

SCALE: 1" = 10'
DATE: 2-16-16
CITY PROJECT NO.: 11171
SHEET NO.: C5.2
DRAWING: 18 OF 36

MATCHLINE (SEE SHEET C5.0)

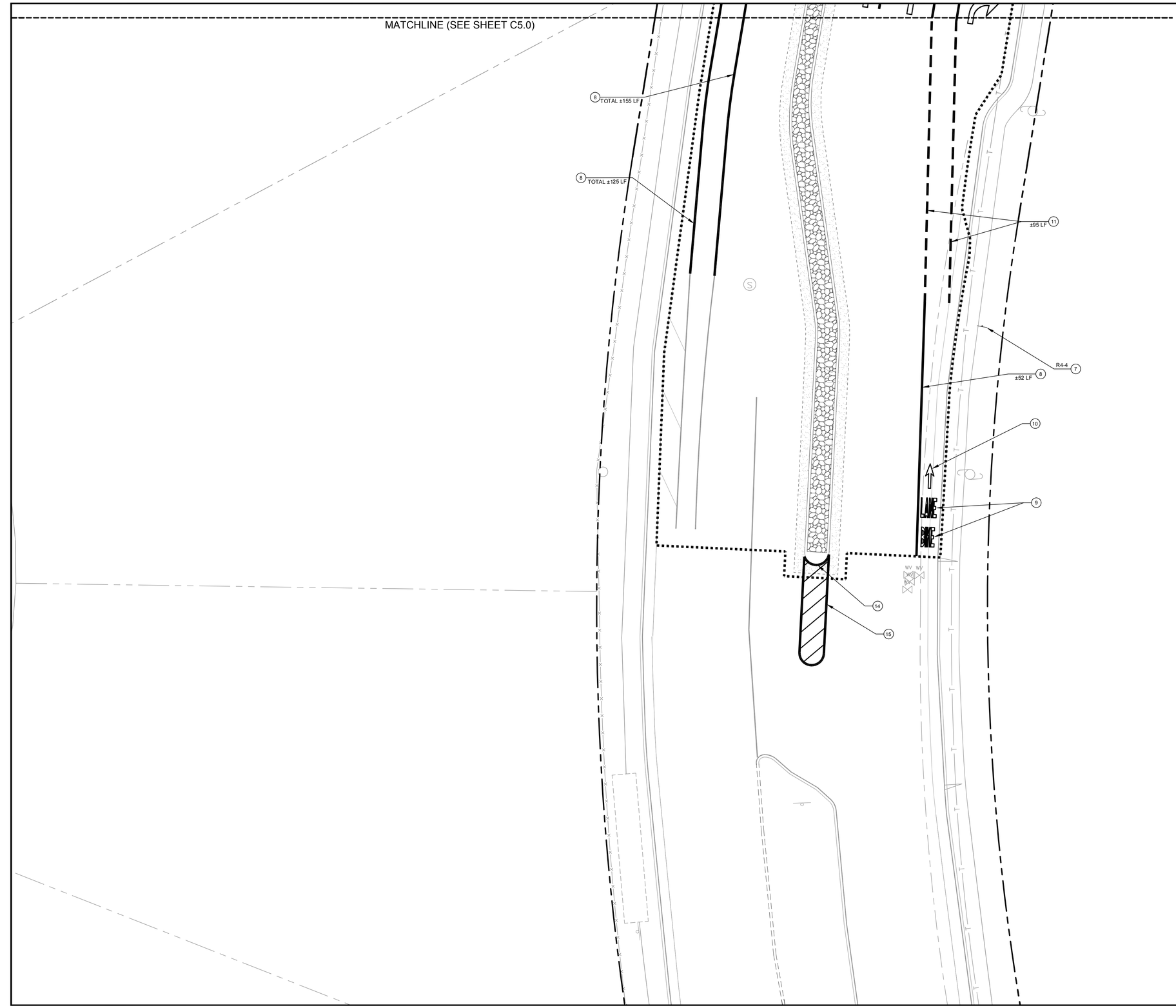

KEYNOTES

1. INSTALL CALTRANS TYPE IV (L) ARROW
2. INSTALL CALTRANS TYPE IV (R) ARROW
3. INSTALL CALTRANS TYPE V ARROW
4. INSTALL NEW CROSSWALK STRIPING AS SHOWN
5. INSTALL NEW LANE MARKERS AND STRIPING AS SHOWN AND AS NEEDED PER DETAIL 38A CALTRANS STD PLAN A20D. SEE PLAN FOR LENGTH
6. INSTALL SALVAGED SIGN PER SAN RAFAEL CITY STD. SEE PLANS FOR SPECIFIED CALIFORNIA (CA) SIGN CODE.
7. INSTALL SIGN PER SAN RAFAEL CITY STD. SEE PLANS FOR SPECIFIED CALIFORNIA (CA) SIGN CODE.
8. INSTALL NEW BIKE LANE STRIPING AS SHOWN. 6" WHITE LINE PER DETAIL 39 CALTRANS STD PLAN A20D. SEE PLAN FOR LENGTH
9. INSTALL NEW WORD PAVEMENT MARKINGS. ALL LETTERS AND NUMERALS SHOULD BE APPROVED BY CALTRANS AND IN CONFORMANCE WITH CALTRANS STD.
10. INSTALL CALTRANS BIKE LANE ARROW
11. INSTALL NEW BIKE LANE STRIPING AS SHOWN. 6" WHITE LINE PER DETAIL 39A CALTRANS STD PLAN A20D. SEE PLAN FOR LENGTH
12. INSTALL NEW LANE MARKERS AND STRIPING AS SHOWN AND AS NEEDED PER DETAIL 8 CALTRANS STD PLAN A20A. SEE PLAN FOR LENGTH
13. INSTALL EDGE STRIPING AS SHOWN AND AS NEEDED PER DETAIL 21 CALTRANS STD PLAN A20A. SEE PLAN FOR LENGTH
14. PAINT ARC PORTION OF CURB USING YELLOW PAINT. SEE PLANS FOR LOCATION.
15. REFRESH EXISTING WHITE PAINT.

LIMITS OF WORK

Graphic Scale (in feet)

10 0 10 20

1 inch = 10 ft.

NO.	REVISION	BY	DATE
1	35% CD	RJS	02-20-15
2	65% CD	RJS	05-06-15
3	95% CD	RJS	09-28-15
4	100% CD	RJS	01-05-17
			DATE

DESIGNED RJS
DRAWN SAS
CHECKED RJS
APPROVED DATE

PROJECT NAME
FREITAS PKWY & LAS GALLINAS INTERSECTION IMP PROJECT

DRAWING NAME
SIGNING & STRIPING
MANUEL T. FRIETAS PARKWAY SOUTH OF INTERSECTION
SAN RAFAEL COUNTY OF MARIN CALIFORNIA

REGISTERED PROFESSIONAL ENGINEER
RICHARD J. SOUZA
No. 67892
CIVIL
STATE OF CALIFORNIA

CSW|ST2
CSW/Stuber-Stroeh Engineering Group, Inc.
45 Leveroni Court
Novato, CA 94949
tel: 415.883.3850
fax: 415.883.9835
Civil & Structural Engineers
Surveying & Mapping
Electrical Engineering
Construction Management

CITY OF SAN RAFAEL
DEPARTMENT OF
PUBLIC WORKS

SCALE: 1" = 10'
DATE: 2-16-16
CITY PROJECT NO.: 11171
SHEET NO.: C5.3
DRAWING: 19 OF 36

NOTE: DETAILS 9 AND 12 HAVE BEEN OMITTED

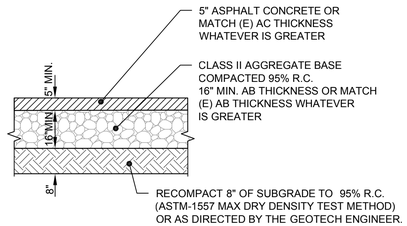

NOTES:
1. PAVEMENT SECTION LOCATIONS ARE PER DESIGN PLAN
2. PAVEMENT SECTIONS BASED ON GEOTECHNICAL REPORT WITH TI = 8
3. SEE DETAIL 3, THIS SHEET FOR AC CONFORM

1 AC PAVEMENT SECTION
SCALE: N.T.S.

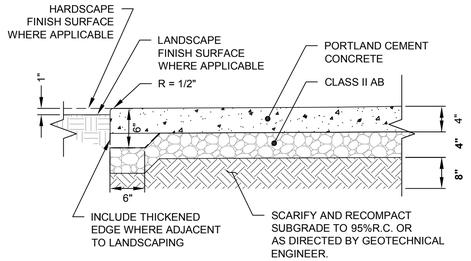

NOTES:
1. ALL TREAD SURFACES SHALL BE SLIP RESISTANT.
2. SEE PLAN FOR LOCATION OF JOINTS.

2 PEDESTRIAN CONCRETE SECTION
SCALE: 1" = 1'

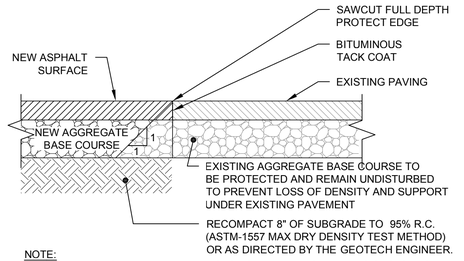

NOTE:
1. REFER TO ASPHALT PAVEMENT SECTION DETAIL FOR DIMENSIONS, SUBGRADE PREPARATION AND OTHER REQUIREMENTS.
2. SAWCUT SECTIONS TYPICAL AT CURB & GUTTER AND RAMP CONFORMS

3 ASPHALT PAVEMENT SAWCUT/CONFORM
SCALE: 1" = 1'

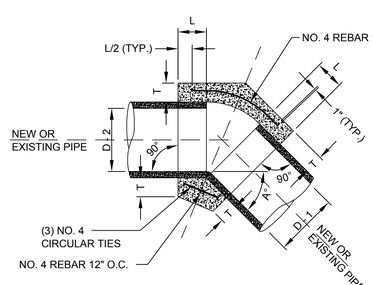

NOTES:
1. A CONCRETE COLLAR IS REQUIRED WHERE PIPES OF DIFFERENT DIAMETERS OR MATERIALS ARE JOINED OR WHERE THE CHANGE IN ALIGNMENT OR GRADE EXCEEDS THAT ALLOWED FOR ON ORDINARY JOINTS.
2. WHERE PIPES OF DIFFERENT DIAMETERS ARE JOINED WITH A CONCRETE COLLAR, L AND T SHOULD BE THOSE OF THE LARGER PIPE. D-D-1 OR D-2, WHICHEVER IS GREATER.
3. FOR PIPE SIZES NOT LISTED AND LESS THAN 66" USE NEXT SIZE LARGER.
4. OMIT REINFORCING ON PIPE 24" OR LESS IN DIAMETER.
5. WHERE REINFORCING IS REQUIRED, THE DIAMETER OF THE CIRCULAR TIES SHALL BE OUTSIDE DIAMETER OF PIPE+T.
6. FIELD CLOSURES OF PIPE OF THE SAME DIAMETER AND WITHOUT CHANGE IN GRADE OR ALIGNMENT SHALL BE MADE WITH A CONCRETE COLLAR.
7. CONCRETE SHALL BE CLASS B PER SECT. 725.

A° = ANGLE OF DEFLECTION

TABLE

D	L	T
12"	1.0'	4"
18"	1.0'	5"
24"	1.0'	6"
36"	1.5'	8"
48"	1.5'	10"
57"	1.5'	10"
60"	1.75'	11"
66"	1.75'	11"

4 CONCRETE COLLAR
SCALE: 1" = 1'

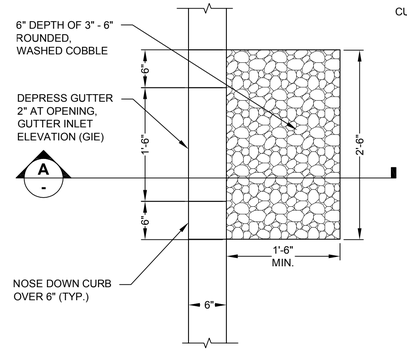

CONSTRUCTION NOTES

1. AFTER CONSTRUCTION PLACE SAND BAGS AT GUTTER OPENINGS TO KEEP STORM FLOWS FROM ENTERING FACILITY UNTIL VEGETATION IS ESTABLISHED

5 CURB CUT INLET WITH GRAVEL ENERGY DISSIPATION
SCALE: 1" = 1'

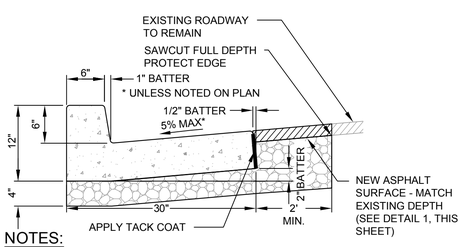

NOTES:
1. NEW CURBS SHALL MATCH EXISTING AS CLOSELY AS POSSIBLE IN FINISH, SCORING, AND COLOR. ALL CONCRETE, 2LB. LAMP BLACK (OR EQUIVALENT) PER CU.YD. CONCRETE SHALL BE ADDED TO MIX.
2. ALL EXPOSED EDGES SAHLL BE ROUNDED WITH $\frac{3}{4}$"RADIUS TOOL.

6 CONTROL JOINT FOR PEDESTRIAN CONCRETE PAVEMENT
SCALE: 1" = 1'

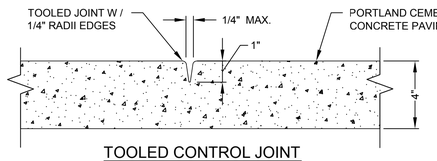

TOOLED CONTROL JOINT

NOTES:
1. CONTROL JOINTS SHALL BE 5' MINIMUM O.C FOR PEDESTRIAN CONCRETE WALKWAYS.
2. CONSTRUCT CONTROL JOINTS WITHIN 24 HOURS OF POUR.

7 TYPE "A" CURB AND GUTTER
SCALE: N.T.S.

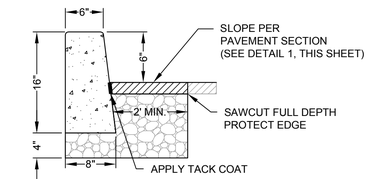

NOTES:
1. NEW CURBS SHALL MATCH EXISTING AS CLOSELY AS POSSIBLE IN FINISH, SCORING, AND COLOR. ALL CONCRETE PLACED ADJACENT TO EXISTING, 2LB. LAMP BLACK (OR EQUIVALENT) PER CU.YD. CONCRETE SHALL BE ADDED TO MIX.
2. ALL EXPOSED EDGES SAHLL BE ROUNDED WITH $\frac{1}{2}$"RADIUS TOOL.

8 MODIFIED TYPE "E" CURB AND GUTTER
SCALE: N.T.S.

NOT USED

10 NOT USED
SCALE: 1" = 1'

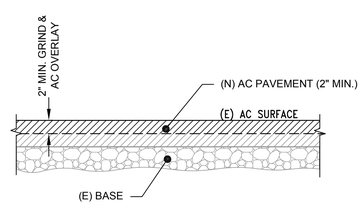

NOTE:
1. SEE SITE PLAN FOR SLOPES & FINISHED GRADES
2. CONTRACTOR SHALL SLOPE ALL DRIVEWAY AND PARKING LOT AREAS TO THE STORM DRAIN INLETS

11 ASPHALT GRIND AND OVERLAY SECTION DETAIL
SCALE: N.T.S.

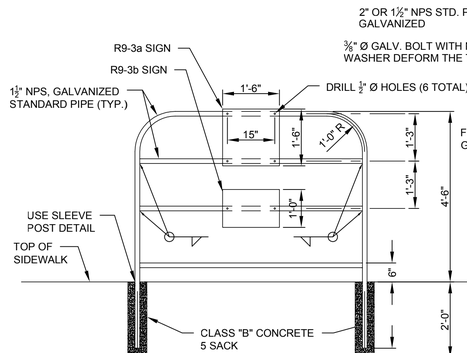

SLEEVE POST DETAIL
N.T.S.

NOTES:
1. PIPE POST TO BE SET 1' - 6" BACK FROM FACE OF CURB UNLESS OTHERWISE SPECIFIED.
2. STEEL SLEEVE TO BE CONSTRUCTED WITH A DIAMETER $\frac{1}{16}$" LARGE THAN POST. WALL THICKNESS OF SLEEVE TO BE SAME AS POST OR LARGER.
3. CONTRACTOR MAY SUBMIT ALTERNATIVE DETAILS FOR APPROVAL B Y THE ENGINEER.
4. FOR MINIMUM PIPE DIAMETERS AND WALL THICKNESS REFER TO ASTM A6M.

13 MODIFIED TYPE I BARRICADE
SCALE: 1" = 1'

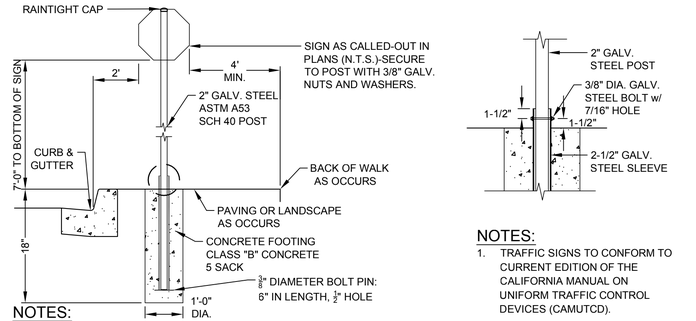

NOTES:
1. TRAFFIC SIGNS SHALL BE PER CITY STD METAL SIGN POST DETAIL UNIFORM STANDARD PLAN (JANUARY 2009).
2. TRAFFIC SIGNS TO CONFORM TO CURRENT EDITION OF THE CALIFORNIA MANUAL ON UNIFORM TRAFFIC CONTROL DEVICES (CAMUTCD).

NOTES:
1. TRAFFIC SIGNS TO CONFORM TO CURRENT EDITION OF THE CALIFORNIA MANUAL ON UNIFORM TRAFFIC CONTROL DEVICES (CAMUTCD).

14 TRAFFIC SIGN INSTALLATION DETAIL
SCALE: 1" = 2'

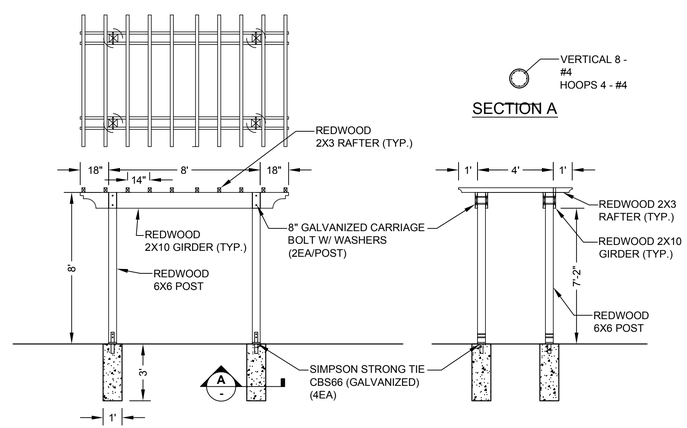

15 ARBOR DETAIL
SCALE: N.T.S

NO.	REVISION	BY	DATE
1	35% CD	RJS	02-20-15
2	65% CD	RJS	05-06-15
3	95% CD	RJS	09-28-15
4	100% CD	RJS	01-05-17

		DATE
DESIGNED	RJS	
DRAWN	SAS	
CHECKED	RJS	
APPROVED		

PROJECT NAME: FREITAS PKWY & LAS GALLINAS INTERSECTION IMP PROJECT

DRAWING NAME: DETAIL SHEET

SAN RAFAEL COUNTY OF MARIN CALIFORNIA

REGISTERED PROFESSIONAL ENGINEER
RICHARD J. SOUZA
No. 67892
CIVIL
STATE OF CALIFORNIA

CSW|ST2
CSW/Stuber-Stroeh Engineering Group, Inc.
45 Leveroni Court
Novato, CA 94949
tel: 415.883.9880
fax: 415.883.9835
Civil & Structural Engineers
Surveying & Mapping
Environmental Planning
Construction Management

CITY OF SAN RAFAEL
DEPARTMENT OF PUBLIC WORKS

SCALE: as shown
DATE: 2-16-16
CITY PROJECT NO.: 11171
SHEET NO.: C6.0
DRAWING: 20 OF 36

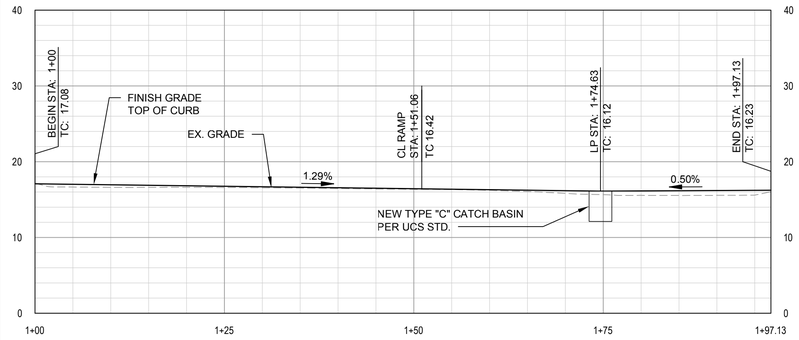

CR - LOS GAMOS WEST - TOP OF CURB PROFILE

SCALE: HOR. 1" = 10' VERT. 1" = 10'

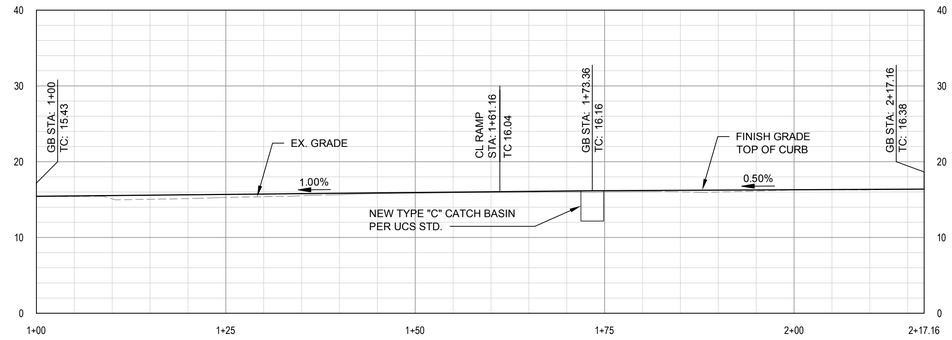

CR - LOS GAMOS EAST - TOP OF CURB PROFILE

SCALE: HOR. 1" = 10' VERT. 1" = 10'

NO.	REVISION	BY	DATE
1	35% CD	RJS	02-20-15
2	65% CD	RJS	05-06-15
3	95% CD	RJS	09-28-15
4	100% CD	RJS	01-05-17

		DATE
DESIGNED	RJS	
DRAWN	SAS	
CHECKED	RJS	
APPROVED		

PROJECT NAME

FREITAS PKWY & LAS GALLINAS INTERSECTION IMP PROJECT

DRAWING NAME

PROFILES

SAN RAFAEL COUNTY OF MARIN CALIFORNIA

REGISTERED PROFESSIONAL ENGINEER
RICHARD J. SOUZA
No. 67892
CIVIL
STATE OF CALIFORNIA

CSW/ST2
CSW/Stuber-Stroeh Engineering Group, Inc.
45 Leveroni Court
Novato, CA 94949
tel: 415.883.9850
fax: 415.883.9835
Civil & Structural Engineers
Surveying & Mapping
Environmental Planning
Construction Management

CITY OF SAN RAFAEL
DEPARTMENT OF
PUBLIC WORKS

SCALE: as shown

DATE: 2-16-16

CITY PROJECT NO.: 11171

SHEET NO.: C6.1

DRAWING: 21 OF 36

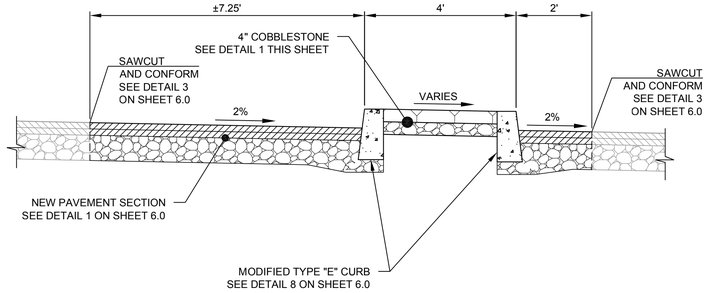

A NEW MEDIAN SECTION
SCALE: 1/2" = 1'

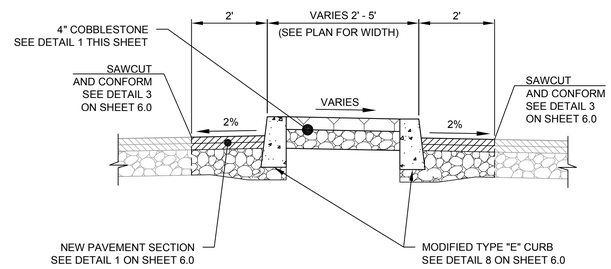

B NEW MEDIAN SECTION
SCALE: 1/2" = 1'

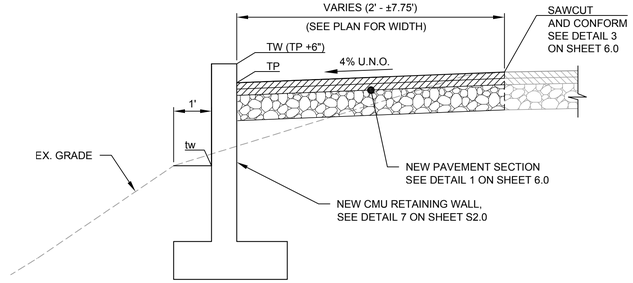

C NEW CMU WALL
SCALE: 1/2" = 1'

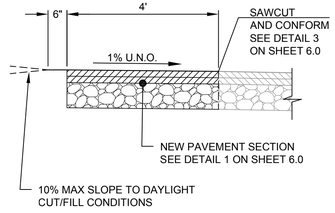

D NEW PAVEMENT WIDENING
SCALE: 1/2" = 1'

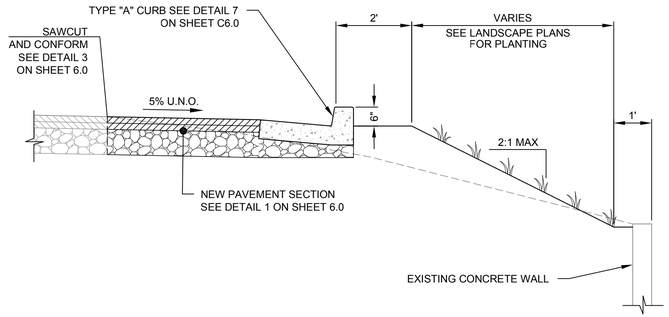

E NEW PAVEMENT WIDENING
SCALE: 1/2" = 1'

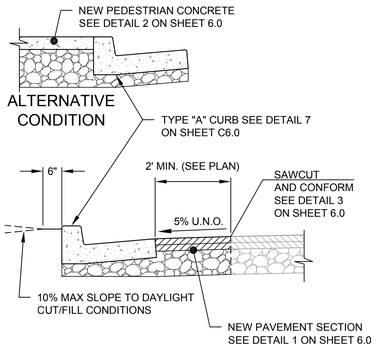

F NEW CURB AND GUTTER
SCALE: 1/2" = 1'

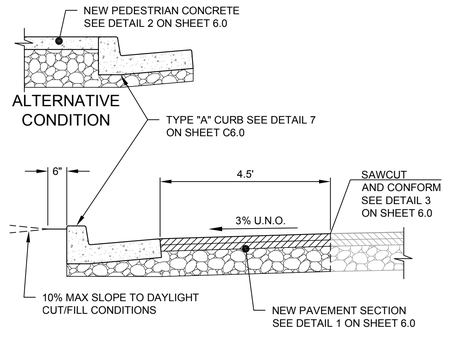

G NEW CURB AND GUTTER
SCALE: 1/2" = 1'

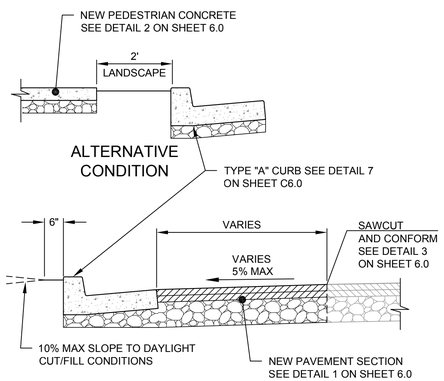

H NEW CURB AND GUTTER
SCALE: 1/2" = 1'

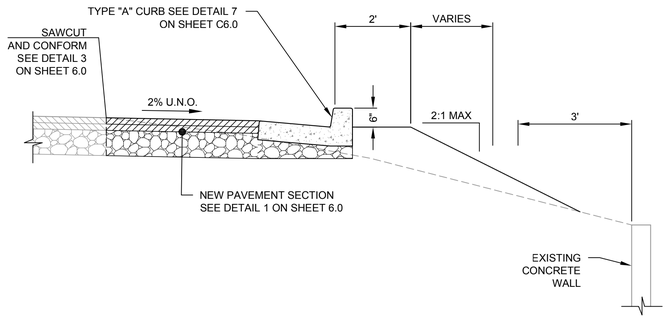

J NEW CURB AND GUTTER
SCALE: 1/2" = 1'

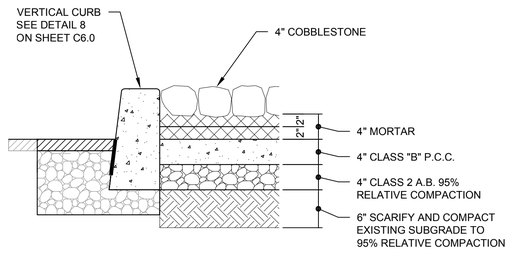

1 COBBLESTONE SECTION
SCALE: 1" = 1'

NO.	REVISION	BY	DATE
1	35% CD	RJS	02-20-15
2	65% CD	RJS	05-06-15
3	95% CD	RJS	09-28-15
4	100% CD	RJS	01-05-17

DESIGNED RJS
DRAWN SAS
CHECKED RJS
APPROVED
DATE

PROJECT NAME
FREITAS PKWY & LAS GALLINAS INTERSECTION IMP PROJECT

DRAWING NAME
SECTIONS

SAN RAFAEL COUNTY OF MARIN CALIFORNIA

REGISTERED PROFESSIONAL ENGINEER
RICHARD J. SOUZA
No. 67892
CIVIL
STATE OF CALIFORNIA

CSW ST2
CSW/Stuber-Stroeh Engineering Group, Inc.
45 Leveroni Court
Novato, CA 94949
tel: 415.883.3850
fax: 415.883.3858
Civil & Structural Engineers
Surveying & Mapping
Electrical Engineering
Construction Management

CITY OF SAN RAFAEL
DEPARTMENT OF
PUBLIC WORKS

SCALE: 1/2" = 1'
DATE: 2-16-16
CITY PROJECT NO.: 11171
SHEET NO.: C6.2
DRAWING: 22 OF 36

EROSION CONTROL LEGEND

- CONSTRUCTION FENCING
- FIBER ROLLS
- SAND/GRAVEL BAG BARRIER
- BANK CUT FOR FOUNDATION
- DIRECTION OF FLOW OR SLOPE
- EXISTING DIRECTION OF FLOW OR SLOPE
- WD — CONCRETE WASHDOWN AREA
- D — DELIVERY AREA
- STORM INLET PROTECTION
- PT — PORTABLE TOILET WITH LINER

Graphic Scale (in feet)

30 0 30 60

1 inch = 30 ft.

LIMITS OF WORK

BIORETENTION FACILITY
SEE DETAIL 1 ON SHEET C8.1

LIMITS OF WORK

FREITAS PARKWAY

NEW AC PAVEMENT

LAS GALLINAS AVE

PT

DRAINAGE CHANNEL

NEW AC PAVEMENT

NEW AC PAVEMENT

DRAINAGE CHANNEL

FREITAS PARKWAY

NEW AC PAVEMENT

LIMITS OF WORK

SEE LOS GAMOS ROAD
PLAN VIEW BELOW

D WD

STAGING AREA

LAS GALLINAS AVE

LIMITS OF WORK

INTERSECTION PLAN VIEW

SEE INTERSECTION
PLAN VIEW ABOVE

LIMITS OF WORK

NEW AC PAVEMENT

LOS GAMOS RD

FREITAS PARKWAY

LOS GAMOS ROAD PLAN VIEW

NO.	REVISION	BY	DATE
1	35% CD	RJS	02-20-15
2	65% CD	RJS	05-06-15
3	95% CD	RJS	09-28-15
4	100% CD	RJS	01-05-17

		DATE
DESIGNED	RJS	
DRAWN	SAS	
CHECKED	RJS	
APPROVED		

PROJECT NAME
FREITAS PKWY & LAS GALLINAS INTERSECTION IMP PROJECT

DRAWING NAME
EROSION CONTROL PLAN

SAN RAFAEL COUNTY OF MARIN CALIFORNIA

REGISTERED PROFESSIONAL ENGINEER
RICHARD J. SOUZA
No. 67892
CIVIL
STATE OF CALIFORNIA

CSW ST2
CSW/Stuber-Stroeh Engineering Group, Inc.
45 Leveroni Court
Novato, CA 94949
tel: 415.883.9850
fax: 415.883.9835
Civil & Structural Engineers
Surveying & Mapping
Environmental Planning
Construction Management

CITY OF SAN RAFAEL
DEPARTMENT OF
PUBLIC WORKS

SCALE: 1 inch = 30 ft.
DATE: 2-16-16
CITY PROJECT NO.: 11171
SHEET NO.: C7.0
DRAWING: 23 OF 36

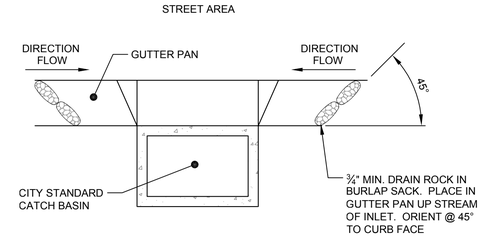

1 GRAVEL BAG FILTER AT GUTTER IN TRAFFIC AREAS

SCALE: NTS

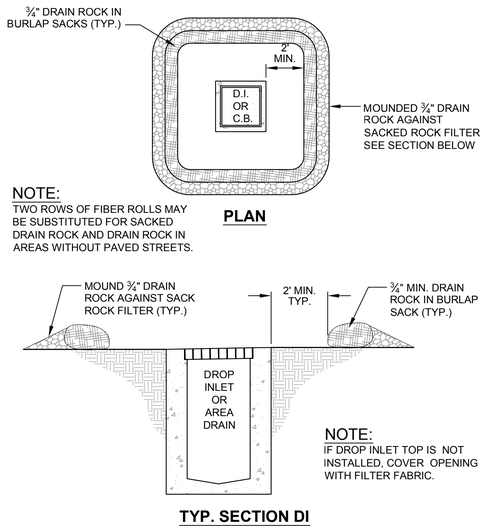

NOTE:
TWO ROWS OF FIBER ROLLS MAY BE SUBSTITUTED FOR SACKED DRAIN ROCK AND DRAIN ROCK IN AREAS WITHOUT PAVED STREETS.

PLAN

NOTE:
IF DROP INLET TOP IS NOT INSTALLED, COVER OPENING WITH FILTER FABRIC.

TYP. SECTION DI

2 GRAVEL BAG FILTER AT INLETS

SCALE: NTS

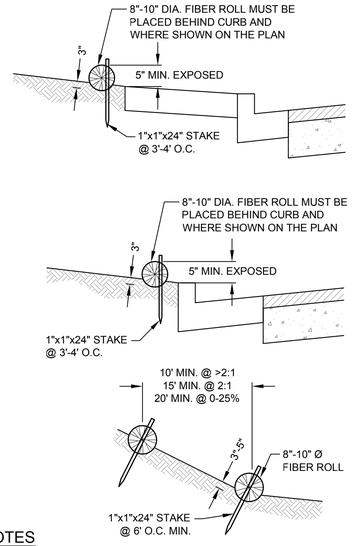

NOTES

1. FIBER ROLLS TO BE LAID ALONG CONTOUR.

3 FIBER ROLL INSTALLATION DETAILS

SCALE: NTS

EROSION CONTROL LEGEND

- CONSTRUCTION FENCING
- FIBER ROLLS
- SAND/GRAVEL BAG BARRIER
- BANK CUT FOR FOUNDATION
- DIRECTION OF FLOW OR SLOPE
- EXISTING DIRECTION OF FLOW OR SLOPE
- WD — CONCRETE WASHDOWN AREA
- D — DELIVERY AREA
- STORM INLET PROTECTION
- PT — PORTABLE TOILET WITH LINER

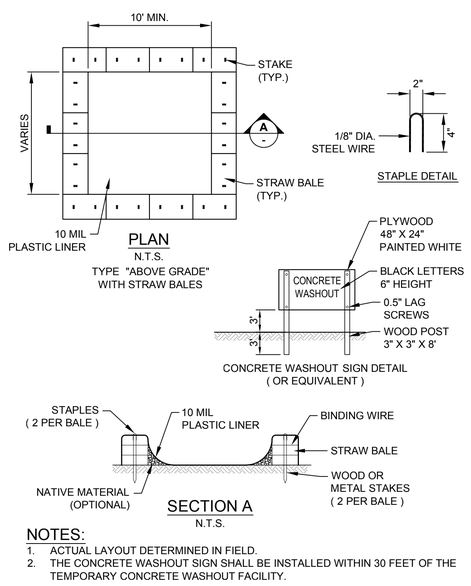

PLAN
N.T.S.
TYPE "ABOVE GRADE" WITH STRAW BALES

CONCRETE WASHOUT SIGN DETAIL
(OR EQUIVALENT)

SECTION A
N.T.S.

NOTES:
1. ACTUAL LAYOUT DETERMINED IN FIELD.
2. THE CONCRETE WASHOUT SIGN SHALL BE INSTALLED WITHIN 30 FEET OF THE TEMPORARY CONCRETE WASHOUT FACILITY.

4 TEMPORARY CONCRETE WASHOUT DETAIL

SCALE: 1" = 1'

POLLUTION CONTROL NOTES:

1. EXPORT OF SOIL IS ANTICIPATED ON PORTIONS OF THIS PROJECT.
2. SITE WILL BE GRADED IN ACCORDANCE WITH THE GRADING PLANS PREPARED BY CSW/ST2. GRADING SHALL DIRECT ALL STORM WATER RUNOFF TO THE STREETS OR INLETS SHOWN ON THIS PLAN AND ULTIMATELY TO THE CITY-MAINTAINED STORM DRAIN SYSTEM. ALL STORM WATER FROM THIS SITE IS INTENDED TO BE DIRECTED TO THE CITY STORM DRAINS.
3. IF SIGNIFICANT SEDIMENT OR OTHER VISUAL SYMPTOMS OF IMPURITIES ARE NOTICED IN THE STORM WATER, CONTACT THE CIVIL ENGINEER IMMEDIATELY.
4. CONTRACTOR IS RESPONSIBLE FOR INSPECTION AND RESTORATION OF ALL ASPECTS OF THIS PLAN. SEDIMENT ON SIDEWALKS AND GUTTERS SHALL BE REMOVED BY SHOVEL OR BROOM AND PLACED IN STOCKPILES APPROVED BY THE CITY ENGINEER.
5. ALL DUMPSTERS OR OTHER TRASH STORAGE ENCLOSURES SHALL BE UTILIZED SOLELY FOR NON-HAZARDOUS MATERIALS.
6. ALL EMPLOYEES, CONTRACTORS, AND SUBCONTRACTORS ARE RESPONSIBLE FOR CONFORMING TO THE ELEMENTS SHOWN ON THIS PLAN OR RELATED DOCUMENTS. ANY CONTRACTOR PLANNING TO DO WORK ON-SITE SHALL BE RESPONSIBLE FOR OBTAINING AND REVIEWING ALL SWPPP INFORMATION FROM OWNER PRIOR TO START OF WORK AND EDUCATING ALL OF THEIR EMPLOYEES OR SUBCONTRACTORS AS TO THE CONTENTS OF THIS SWPPP.
7. THE CONTRACTOR IS RESPONSIBLE FOR OBTAINING ALL PERMITS AND FILING ALL PLANS WITH RELATED AGENCIES ASSOCIATED WITH THEIR WORK. THIS SHALL INCLUDE, BUT NOT BE LIMITED TO, PERMITS FOR STORAGE OF HAZARDOUS MATERIALS, BUSINESS PLANS, PERMITS FOR STORAGE OF FLAMMABLE LIQUIDS, GRADING PERMITS, OR OTHER PLANS OR PERMITS REQUIRED BY CITY, OR OTHER AGENCIES. ALL PROPERTY OWNERS, CONTRACTORS, OR SUBCONTRACTORS WORKING ON-SITE ARE INDIVIDUALLY RESPONSIBLE FOR OBTAINING AND SUBMITTING ANY BUSINESS PLANS OR PERMITS REQUIRED BY CITY, STATE OR LOCAL AGENCIES.
8. CONTRACTOR MAY RELOCATE STORAGE, DELIVERY, OR WASH-OUT AREAS, TO SUIT THEIR OPERATIONS. RELOCATED LOCATION TO BE SHOWN ON PLANS MAINTAINED AT JOBSITE. CONTACT CIVIL ENGINEER FOR ANY PLAN REVISIONS. PLAN REVISIONS SHALL BE SUBMITTED TO CITY IF REQUESTED. CONTRACTOR TO MAINTAIN SECONDARY CONTAINMENT AS NECESSARY TO PROHIBIT POLLUTION AND TOXIC MATERIALS FROM ENTERING STORM DRAIN.
9. AFTER COMPLETION OF THE CURB, GUTTER, AND PAVING, OR CONCRETE V-DITCHES THE SILT FILTERS SHALL BE MODIFIED TO BURLAP SACKS FILLED WITH 3/4" DRAIN ROCK OR OTHER ACCEPTED BMP POSITIONED SURROUNDING EACH CATCH BASIN.

EROSION CONTROL NOTES:

1. NO VEHICLES SHALL BE ALLOWED TO TRACK OR SPREAD SOIL FROM THE CONSTRUCTION AREAS ONTO EXISTING PAVED PUBLIC STREETS. ANY VEHICLE OPERATING WITHIN THE PROJECT AREA AND OFF THE PAVED STREET SHALL CROSS A CONSTRUCTION ENTRANCE AS SHOWN HEREIN. THE ENTRANCE MAY BE MODIFIED BY THE CONTRACTOR TO FACILITATE HIS OPERATIONS.
2. THE EROSION AND SEDIMENT CONTROL MEASURES WILL BE OPERABLE DURING THE RAINY SEASON, OCTOBER 1ST TO APRIL 15TH. NO GRADING WILL OCCUR BETWEEN OCTOBER 1ST AND APRIL 15TH, UNLESS AUTHORIZED BY THE CITY ENGINEER.
3. CHANGES TO THIS EROSION CONTROL PLAN TO MEET FIELD CONDITIONS WILL BE MADE ONLY WITH THE APPROVAL OF, OR AT THE DIRECTION OF THE CITY ENGINEER. CHANGES MADE TO SUIT FIELD CONDITIONS SHALL BE BROUGHT TO THE IMMEDIATE ATTENTION OF THE CIVIL ENGINEER AND THE CITY ENGINEER.
4. DURING THE RAINY SEASON, ALL PAVED AREAS WILL BE KEPT CLEAR OF EARTH MATERIAL AND DEBRIS. THE SITE WILL BE MAINTAINED SO THAT A MINIMUM OF SEDIMENT-LADEN RUNOFF ENTERS THE STORM DRAIN SYSTEM. THESE PLANS SHALL REMAIN IN EFFECT UNTIL IMPROVEMENTS ARE ACCEPTED BY THE CITY, AND ALL SLOPES ARE STABILIZED FROM EROSION.
5. STRAW AND TACKIFIER WILL BE APPLIED BY OCTOBER 1ST TO ALL DISTURBED AREAS. ALL EXPOSED SLOPES ADJACENT TO PUBLIC RIGHTS OF WAY SHALL ALSO RECEIVE STRAW AND TACKIFIER. STRAW AND TACKIFIER TO BE APPLIED PER MANUFACTURER'S SPECIFICATIONS AND SHALL BE APPLIED AT A RATE OF 2 TONS PER ACRE MINIMUM.
6. INSTALL 3" MIN. THICKNESS MULCH OVER LANDSCAPE AREAS BETWEEN ROADWAY AND SIDEWALK.
7. ROUGH GRADED DITCHES SHALL BE LINED WITH EROSION CONTROL BLANKETS AND THEN HYDROSEEDED.
8. AFTER INSTALLATION OF CONCRETE IN DITCHES, INSTALL ONE SACKED ROCK FILTER DAM AT INLET UNTIL SLOPES ARE STABILIZED FROM EROSION.
9. THIS PLAN ASSUMES THE COMPLETION OF GRADING AND STORM DRAIN FACILITIES. IF FACILITIES ARE NOT COMPLETED, CONTACT THE CIVIL ENGINEER FOR PLAN REVISIONS.
10. ALL BANKS AND ALL GRADED AREAS SHALL BE HYDROSEEDED TO CONTROL EROSION BY OCTOBER 1ST. SEE SEED MIX, THIS SHEET.

URBAN RUNOFF POLLUTION NOTES:

1. STABILIZE ALL DENUDED AREAS AND MAINTAIN EROSION CONTROL MEASURES CONTINUOUSLY BETWEEN OCTOBER 1 AND APRIL 1.
2. REMOVE SPOILS PROMPTLY AND AVOID STOCKPILING OF FILL MATERIALS WHEN RAIN IS FORECAST. IF RAIN THREATENS, STOCK- PILED SOILS AND OTHER MATERIALS SHALL BE TARPED, AT THE REQUEST OF THE CITY ENGINEER.
3. STORE, HANDLE AND DISPOSE OF CONSTRUCTION MATERIALS AND WASTES SO AS TO PREVENT THEIR ENTRY TO THE STORM DRAIN SYSTEM. CONTRACTOR MUST NOT ALLOW CONCRETE, WASHWATERS, SLURRIES, PAINT OR OTHER MATERIALS TO ENTER CATCH BASINS OR TO ENTER SITE RUNOFF.
4. USE FILTRATION OR OTHER MEASURES TO REMOVE SEDIMENT FROM DEWATERING EFFLUENT.
5. NO CLEANING, FUELING OR MAINTAINING VEHICLES ON SITE SHALL BE PERMITTED IN ANY MANNER THAT ALLOWS DELETERIOUS MATERIALS TO ENTER CATCH BASINS OR TO ENTER SITE RUNOFF.
6. USE OF PESTICIDES IS PROHIBITED. USE OF FERTILIZERS SHALL BE APPLIED AND CONTROLLED TO PREVENT POLLUTION RUNOFF.
7. IN THE EVENT GRADING OPERATIONS ARE SUSPENDED BY WEATHER CONDITIONS AND IF THE STORM DRAIN SYSTEM IS INCOMPLETE, INSTALL ADDITIONAL ROCK FILTERS AND OTHER FACILITIES AS DIRECTED BY THE CIVIL ENGINEER AND CITY ENGINEER.
8. CONTRACTOR TO RELOCATE CONCRETE WASHDOWN, VEHICLE STORAGE DELIVERY, AND NON HAZARDOUS WASTE AREAS AS NECESSARY TO FACILITATE THEIR OPERATION AND PROMOTE POLLUTION CONTROL.
9. HYDROMULCH & TACKIFIER MAY BE ELIMINATED WITHIN BUILDING FOOT PRINT IF CONSTRUCTION IS IMMINENT.

NO.	REVISION	BY	DATE
1	35% CD	RJS	02-20-15
2	65% CD	RJS	05-06-15
3	95% CD	RJS	09-28-15
4	100% CD	RJS	01-05-17

DESIGNED	RJS	DATE
DRAWN	SAS	
CHECKED	RJS	
APPROVED		

PROJECT NAME: FREITAS PKWY & LAS GALLINAS INTERSECTION IMP PROJECT

DRAWING NAME: EROSION CONTROL DETAILS

SAN RAFAEL COUNTY OF MARIN CALIFORNIA

REGISTERED PROFESSIONAL ENGINEER
RICHARD J. SOUZA
No. 67892
CIVIL
STATE OF CALIFORNIA

CSW ST2
CSW/Stuber-Stroeh Engineering Group, Inc.
45 Leveroni Court
Novato, CA 94949
tel: 415.883.9850
fax: 415.883.9835
Civil & Structural Engineers
Surveying & Mapping
Electrical Engineering
Construction Management

CITY OF SAN RAFAEL
DEPARTMENT OF PUBLIC WORKS

SCALE: N.T.S.
DATE: 2-16-16
CITY PROJECT NO.: 11171
SHEET NO.: C7.1
DRAWING: 24 OF 36

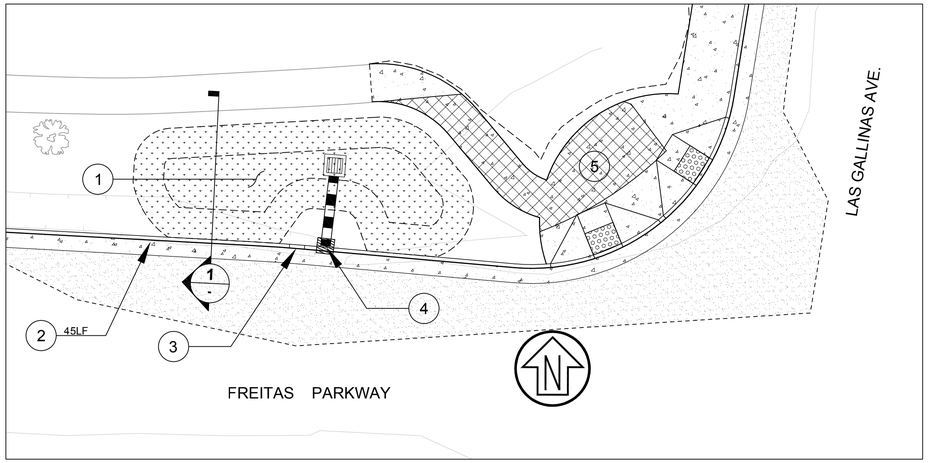

BIORETENTION SITE PLAN

1 INCH = 10 FT.

KEYNOTES

1. BIORETENTION AREA 1, SEE DETAIL 1, THIS SHEET.
2. EXTENDED CURB SECTION, SEE DETAIL 2, THIS SHEET, SEE PLAN FOR LENGTH
3. CURB CUT INLET, SEE DETAIL 5 ON SHEET C6.0.
4. EXISTING DRAINAGE TURNING STRUCTURE TO REMAIN
5. NEW IMPERVIOUS AREA, SEE PLAN FOR LOCATIONS
6. NEW PERVIOUS AREA, SEE PLAN FOR LOCATIONS

SUMMARY

NET INCREASE OF IMPERVIOUS AREA = 5,770 SQ.FT.
BIORETENTION AREA = 630 SQ.FT.
IMP FACTOR SIZE = 9.2%

HYDROLOGY LEGEND

- NEW PERVIOUS AREA
- NEW IMPERVIOUS AREA
- BIORETENTION AREA (TBD)
- NEW CONCRETE PAVEMENT
- NEW ASPHALT PAVEMENT

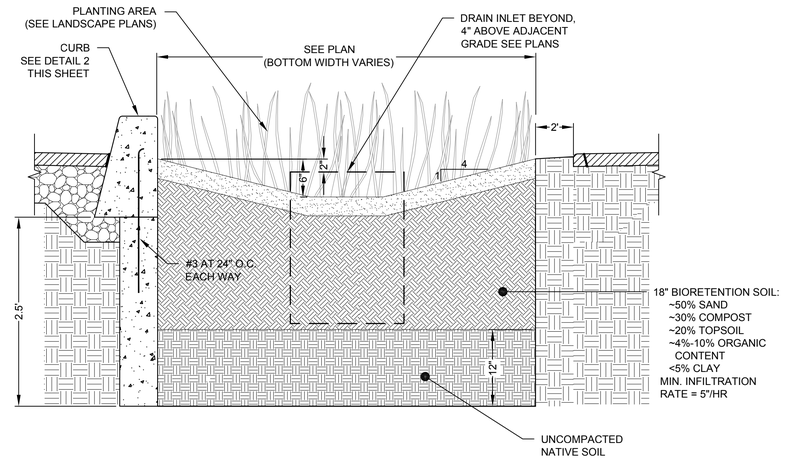

BIORETENTION AREA CONSTRUCTION NOTES

1. SCARIFY SUBGRADE BEFORE INSTALLING BIORETENTION AREA AGGREGATE AND BIORETNETION SOIL MEDIA.
2. COMPACT EACH 6" LIFT OF BIORETENTION SOIL MEDIA WITH LANDSCAPE ROLLER OR BY LIGHTLY WETTING. IF WETTING, LET DRY OVERNIGHT BEFORE PLANTING.
3. NEVER WORK WITHIN BIORETENTION AREA LIMITS DURING RAIN OR UNDER WET CONDITIONS.
4. KEEP ALL HEAVY MACHINERY OUTSIDE BIORETENTION AREA LIMITS.

1 BIORETENTION AREA DETAIL

SCALE: N.T.S.

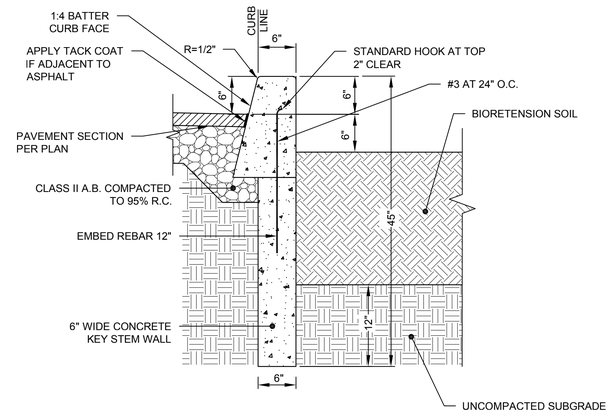

NOTES:

1. CONTROL JOINTS CONSISTING OF 1" DEEP SCORES SHALL BE PLACED AT 10' INTERVALS O.C. - ALL SIDES EXCEPT BOTTOM.
2. GEOTECHNICAL ENGINEER TO OBSERVE SOIL CONDITIONS PRIOR TO THE POURING OF CONCRETE.

2 EXTENDED CURB SECTION

SCALE: NTS

NO.	REVISION	BY	DATE
1	35% CD	RJS	02-20-15
2	65% CD	RJS	05-06-15
3	95% CD	RJS	09-28-15
4	100% CD	RJS	01-05-17

DESIGNED RJS | DRAWN SAS | CHECKED RJS | APPROVED | DATE

PROJECT NAME
FREITAS PKWY & LAS GALLINAS INTERSECTION IMP PROJECT

DRAWING NAME
STORMWATER CONTROL PLAN

SAN RAFAEL COUNTY OF MARIN CALIFORNIA

REGISTERED PROFESSIONAL ENGINEER
RICHARD J. SOUZA
No. 67892
CIVIL
STATE OF CALIFORNIA

CSW ST2
CSW/Stuber-Stroeh Engineering Group, Inc.
45 Leveroni Court
Novato, CA 94949
tel: 415.883.9850
fax: 415.883.9835
Civil & Structural Engineers
Surveying & Mapping
Environmental Planning
Construction Management

CITY OF SAN RAFAEL
DEPARTMENT OF
PUBLIC WORKS

SCALE: as shown
DATE: 2-16-16
CITY PROJECT NO.: 11171
SHEET NO.: C8.0
DRAWING: 25 OF 36

PLANT LIST		Species	Common Name	Size	Spacing	Prototypical Layout
		GROUNDCOVERS				
	A	Baccharis pilularis	Dwarf Coyote Brush	1 Gallon	3' O.C.	A A B B C C A A B B A A B B C C A A B B B B C C A A B B C C B B C C A A B B C C
	B	Arctostaphylos uva-ursi	Kinnikinick Manzanita	" "	" "	
	C	Ceanothus t. 'Concha'	Blue Wild Lilac	" "	" "	
		STORMWATER PLANTING				
	D	Carex tumulicola	Berkeley Sedge	1 Gallon	12" O.C., TYP	D D E E F F D D E E D D E E F F D D E E E E F F D D E E F F E E F F D D E E F F
	E	Juncus patens	California Gray Rush	" "	" "	
	F	Festuca rubra	Creeping Red Fescue	" "	" "	
		NATIVE GRASSES				
	1	Melica imperfecta	Coast Melic Grass	1 Gallon	12" O.C., TYP	1 1 2 2 3 3 4 4 5 5 1 1 2 2 3 3 4 4 5 5 2 2 3 3 4 4 5 5 1 1 2 2 3 3 4 4 5 5 1 1
	2	Nassella pulchra	Purple Needle Grass	" "	" "	
	3	Festuca californica	California Fescue	" "	" "	
	4	Leymus condesatus	Canyon Prince Wild Rye	" "	" "	
		SOD				
		Festuca rubra	Creeping Red Fescue		AS SHOWN	
		SHRUB				
		Rosa californica	California Wild Rose	5 Gallon	18" O.C., TYP	

0 5' 10' 20'

NORTH

THE FOLLOWING REQUIREMENTS PER MMWD:

1. A MINIMUM OF 8" OF NON-MECHANICALLY COMPACTED SOIL SHALL BE AVAILABLE FOR WATER ABSORPTION AND ROOT GROWTH IN PLANTED AREAS.
2. INCORPORATE COMPOST OR NATURAL FERTILIZER INTO THE SOIL TO A DEPTH OF 8" AT A MINIMUM RATE OF 6 CUBIC YARDS PER 1000 SQUARE FEET OR PER SPECIFIC AMENDMENT RECOMMENDATIONS FROM A SOILS LABORATORY REPORT.
3. A MINIMUM 3" LAYER OF MULCH SHALL BE APPLIED ON ALL EXPOSED SOIL SURFACES OF PLANTING AREAS EXCEPT IN TURF AREAS, CREEPING OR ROOTING GROUNDCOVERS, AND DIRECT SEEDING APPLICATIONS.
4. CONTRACTOR TO REVIEW SPECS. & NOTES TO CONFIRM THAT CONFLICTS DO NOT EXIST. IF CONFLICTS EXIST, CONTRACTOR TO CONTACT LANDSCAPE ARCHITECT FOR DIRECTION.

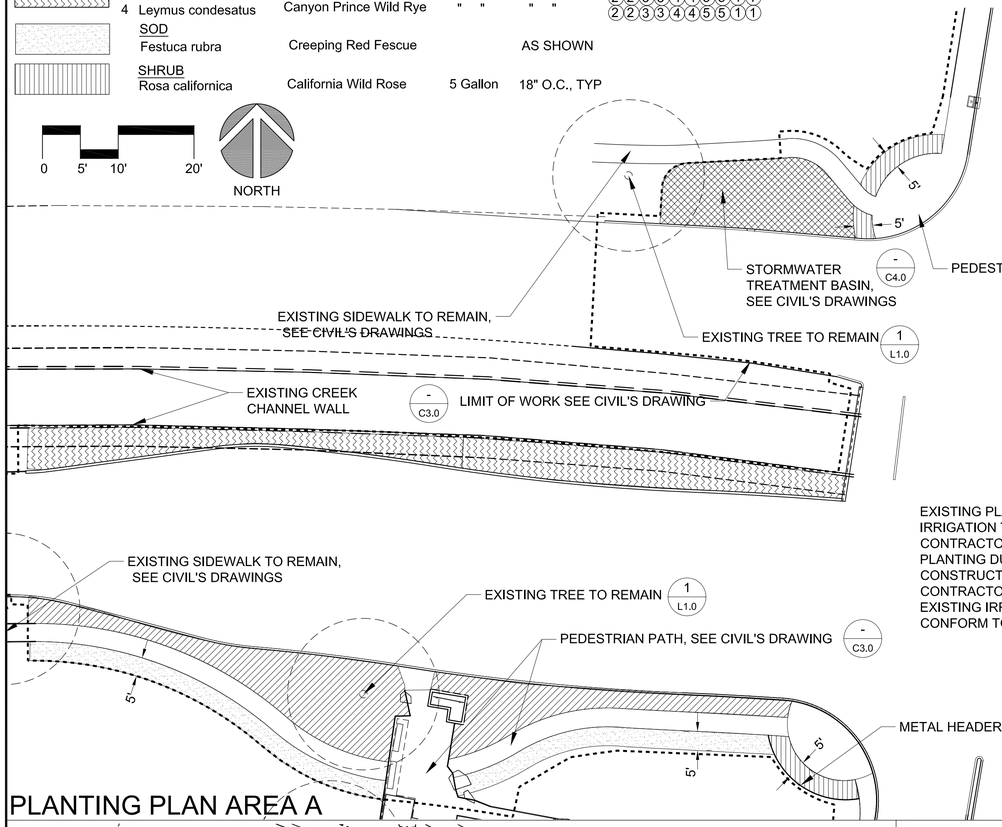

PLANTING PLAN AREA A

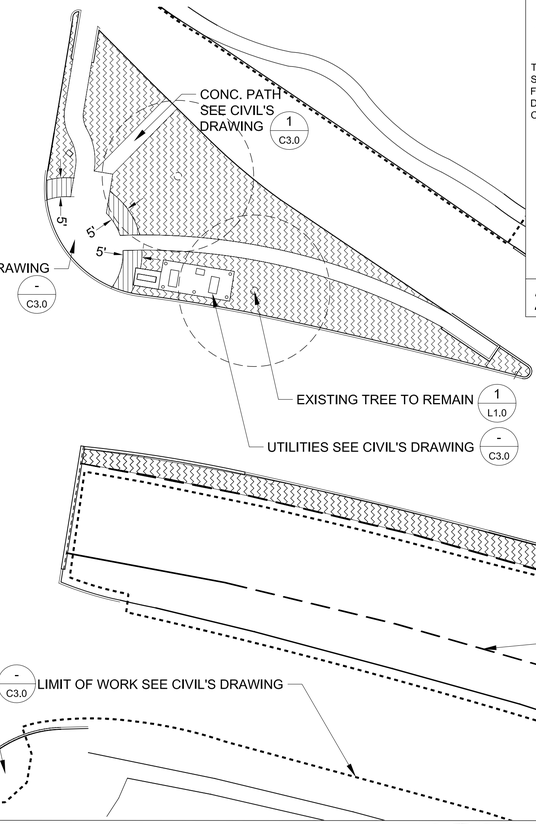

NOTES:
1. HEADER SHALL BE COL-MET BLACK POWDER COATED 12-GAUGE STEEL
2. WHERE HEADER SEPARATES TWO PLANTING AREAS, BOTH PLANTING AREAS SHALL BE PER PLANTING AREA SECTION BELOW.

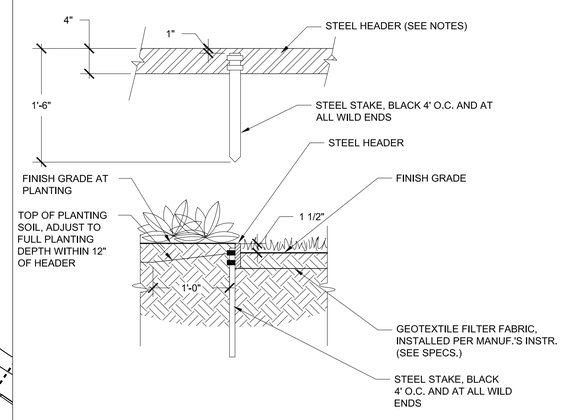

2 METAL HEADER — Scale: 1" = 1'-0"

PLANTING NOTES

1. THE PLANTING PLANS INDICATE PLANTING LOCATION AND QUANTITIES. THE CONTRACTOR SHALL VERIFY ALL QUANTITIES. THE AREAS OF GROUNDCOVER AND PERENNIAL PLANTINGS ARE APPROXIMATE. THE CONTRACTOR SHALL BE RESPONSIBLE FOR PROVIDING THE REQUIRED NUMBER OF PLANTS TO COVER THE AREAS SHOWN ON THESE PLANS.

2. REFER TO THE PLANT LIST FOR PLANT SIZES. REFER TO THE SPECIFICATIONS FOR SOIL PREPARATION, SOIL AMENDMENTS, FERTILIZER AND ADDITIONAL PLANTING REQUIREMENTS.

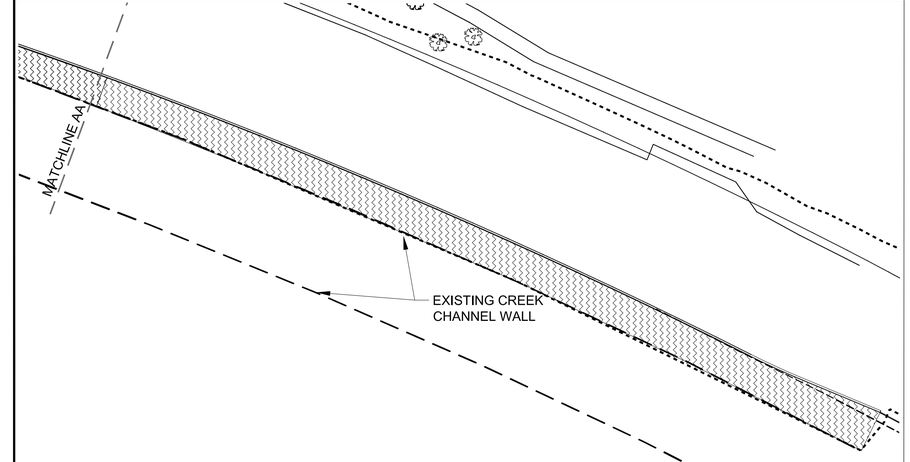

PLANTING PLAN AREA B

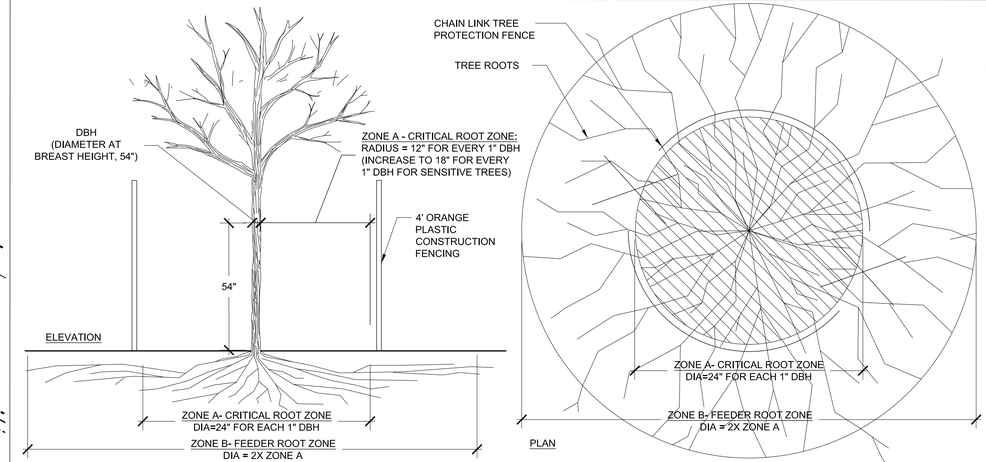

1 TREE PROTECTION DURING CONSTRUCTION

TRENCHING/EXCAVATION

ZONE A (CRITICAL ROOT ZONE)
1. NO DISTURBANCE ALLOWED WITHOUT SITE-SPECIFIC INSPECTION AND APPROVAL OF METHODS TO MINIMIZE ROOT DAMAGE
2. SEVERANCE OF ROOTS LARGER THAN 2" DIA REQUIRES OWNER REPRESENTATIVE'S APPROVAL
3. TUNNELING REQUIRED TO INSTALL LINES 3'-0" BELOW GRADE OR DEEPER

ZONE B (FEEDER ROOT ZONE)
1. OPERATION OF HEAVY EQUIPMENT AND/OR STOCKPILING OF MATERIALS SUBJECT TO OWNER REPRESENTATIVE'S APPROVAL. SURFACE PROTECTION* MEASURES REQUIRED
2. TRENCHING ALLOWED AS FOLLOWS:
   - EXCAVATION BY HAND OR WITH HAND-DRIVEN TRENCHER MAY BE REQUIRED
   - LIMIT TRENCH WIDTH. DO NOT DISTURB ZONE A MAINTAIN 2/3 OR MORE OF ZONE B IN UNDISTURBED CONDITION
   - TUNNELING MAY BE REQUIRED FOR TRENCHES DEEPER THAN 3'-0"

FENCING/ ROOT PROTECTION

FENCING TO BE PROVIDED AND MAINTAINED WITH RADIUS EQUAL TO MINIMUM 12" FOR EVERY 1" OF TRUNK DBH (DIAMETER AT 54" ABOVE FINISH GRADE) INCREASE TO 18" FOR SENSITIVE TREES.

OWNER REPRESENTATIVE'S APPROVAL REQUIRED FOR USE/ACCESS WITHIN ZONE B. PERMISSION FOR USE/ACCESS REQUIRES SURFACE PROTECTION FOR ALL UNFENCED, UNPAVED SURFACES WITHIN ZONE B.

FENCING TO BE 6' GALVANIZED CHAIN LINK FENCE WITH POSTS 6' O.C. MINIMUM. PLACE FENCE OUTSIDE OF CRITICAL ROOT ZONE.

SURFACE PROTECTION MEASURES (within ZONE A)

1. MULCH LAYER, 6"-8" DEPTH
2. 3/4" PLYWOOD ON TOP OF MULCH
3. STEEL PLATES ON TOP OF MULCH

NO.	REVISION	BY	DATE
1	35% CD	MSG	02-20-15
2	65% CD	MSG	05-06-15
3	95% CD	MSG	09-18-15
4	100% CD	MSG	01-05-17

DESIGNED MSG
DRAWN AND
CHECKED MSG
APPROVED
DATE

PROJECT NAME
FREITAS PKWY & LAS GALLINAS INTERSECTION IMP PROJECT

DRAWING NAME
PLANTING PLAN, DETAILS AND LEGEND

SAN RAFAEL COUNTY OF MARIN CALIFORNIA

LICENSED LANDSCAPE ARCHITECT MATTHEW S. GABER 3748 STATE OF CALIFORNIA
Signature
6/08/2016 Renewal Date
12/16/2015 Date

CSW|ST2
CSW/Stuber-Stroeh Engineering Group, Inc.
45 Leveroni Court
Novato, CA 94949
tel: 415.883.8650
fax: 415.883.8835
Civil & Structural Engineers
Land Surveyors
Environmental Planning
Landscape Architecture
Construction Management

MIG
800 HEARST AVENUE
BERKELEY, CA 94710
TEL: 510.845.7549
FAX: 510.845.8750
www.migcom.com

CITY OF SAN RAFAEL
DEPARTMENT OF PUBLIC WORKS

SCALE:
DATE: 05-06-15
CITY PROJECT NO.: 11171
SHEET NO.: L1.0
DRAWING: 26 OF 36

IRRIGATION NOTES

1. THESE IRRIGATION DRAWINGS ARE DIAGRAMMATIC AND INDICATIVE OF THE WORK TO BE INSTALLED. ALL PIPING, VALVES, AND OTHER IRRIGATION COMPONENTS MAY BE SHOWN WITHIN PAVED AREAS FOR GRAPHIC CLARITY ONLY AND ARE TO BE INSTALLED WITHIN PLANTING AREAS. DUE TO THE SCALE OF THE DRAWINGS, IT IS NOT POSSIBLE TO INDICATE ALL OFFSETS, FITTINGS, SLEEVES, CONDUIT, AND OTHER ITEMS WHICH MAY BE REQUIRED. IN THE EVENT OF FIELD DISCREPANCY WITH CONTRACT DOCUMENTS, PLAN THE INSTALLATION WORK ACCORDINGLY BY NOTIFICATION AND APPROVAL OF THE CITY ENGINEER AND ACCORDING TO THE CONTRACT SPECIFICATIONS. NOTIFY AND COORDINATE IRRIGATION CONTRACT WORK WITH APPLICABLE CONTRACTORS FOR THE LOCATION AND INSTALLATION OF PIPE, CONDUIT OR SLEEVES THROUGH OR UNDER WALL, ROADWAYS, PAVING AND STRUCTURES BEFORE CONSTRUCTION. IN THE EVENT THESE NOTIFICATIONS ARE NOT PERFORMED, THE CONTRACTOR ASSUMES FULL RESPONSIBILITY FOR REQUIRED REVISIONS.

2. THE INTENT OF THIS IRRIGATION SYSTEM IS TO PROVIDE THE MINIMUM AMOUNT OF WATER REQUIRED TO SUSTAIN GOOD PLANT HEALTH.

3. IT IS THE RESPONSIBILITY OF THE LANDSCAPE MAINTENANCE CONTRACTOR AND/OR OWNER TO PROGRAM THE IRRIGATION CONTROLLER(S) TO PROVIDE THE MINIMUM AMOUNT OF WATER NEEDED TO SUSTAIN GOOD PLANT HEALTH. THIS INCLUDES MAKING ADJUSTMENTS TO THE PROGRAM FOR SEASONAL WEATHER CHANGES, PLANT MATERIAL, WATER REQUIREMENTS, MOUNDS AND SLOPES, SUN, SHADE AND WIND EXPOSURES.

4. IT IS THE RESPONSIBILITY OF A LICENSED ELECTRICAL CONTRACTOR TO PROVIDE 120 VOLT A.C. (2.5 AMP DEMAND PER CONTROLLER) ELECTRICAL SERVICE TO THE IRRIGATION CONTROLLER LOCATIONS. IT IS THE RESPONSIBILITY OF THE IRRIGATION CONTRACTOR TO COORDINATE THE ELECTRICAL SERVICE INSTALLATION AND TO MAKE FINAL CONNECTION FROM ELECTRICAL SERVICE STUB-OUT TO CONTROLLER(S). PROVIDE PROPER GROUNDING PER CONTROLLER MANUFACTURER'S INSTRUCTIONS AND IN ACCORDANCE WITH LOCAL CODES.

5. THE CONTROLLER WILL BE PROVIDED WITH ITS OWN GROUND ROD. THE GROUND ROD SHALL BE AN EIGHT FOOT LONG BY 5/8" DIAMETER U.L. APPROVED COPPER CLAD ROD. INSTALL NO MORE THAN 6" OF THE GROUND ROD ABOVE FINISH GRADE. CONNECT #6 GAUGE WIRE WITH A U.L. APPROVED GROUND ROD CLAMP TO ROD AND BACK TO GROUND SCREW AT BASE OF CONTROLLER WITH APPROPRIATE CONNECTOR. MAKE THIS WIRE AS SHORT AS POSSIBLE, AVOIDING KINKS OR BENDING.

6. PROVIDE EACH IRRIGATION CONTROLLER WITH ITS OWN INDEPENDENT LOW VOLTAGE COMMON GROUND WIRE.

7. IRRIGATION CONTROL WIRES: SOLID COPPER WITH U.L. APPROVAL FOR DIRECT BURIAL IN GROUND. CONTROL WIRE SERVICING REMOTE CONTROL VALVES: SIZE #14-1 WIRE WITH A UNIQUE COLOR INSULATING JACKET FOR EACH CONTROLLER. COMMON GROUND WIRE: SIZE #12-1 WIRE WITH A WHITE INSULATING JACKET AND A STRIPE OF COLOR WHICH MATCH'S THE CONTROL WIRE COLOR CHOICE FOR SPECIFIC CONTROLLER. SPARE WIRE: #14-1 WIRE WITH BLACK INSULATION JACKET. SPLICES SHALL BE MADE WITH 3M-DBY SEAL PACKS OR APPROVED EQUAL.

8. INSTALL A MINIMUM OF ONE SPARE CONTROL WIRE OF A DIFFERENT COLOR ALONG THE ENTIRE MAIN LINE. QUANTITY OF SPARE WIRES SHALL EQUAL THE QUANTITY OF UNUSED STATION AT THE CONTROLLER. LOOP 36" EXCESS WIRE INTO EACH SINGLE VALVE BOX AND INTO ONE VALVE BOX IN EACH GROUP OF VALVES.

9. INSTALL REMOTE CONTROL VALVE BOXES 12" FROM WALK, CURB, LAWN, HEADER BOARD, BUILDING, OR LANDSCAPE FEATURE. AT MULTIPLE VALVE BOX GROUPS, INSTALL EACH BOX AN EQUAL DISTANCE FROM THE WALK, CURB, LAWN, HEADER BOARD, BUILDING, OR LANDSCAPE FEATURE, AND PROVIDE 12" FROM THE WALK, CURB, HEADER BOARD, BUILDING, OR LANDSCAPE FEATURE AND INSTALL EACH BOX 12" APART.

10. THE IRRIGATION SYSTEM DESIGN IS BASED ON THE MINIMUM OPERATING PRESSURE SHOWN ON THE IRRIGATION DRAWINGS. VERIFY WATER PRESSURE PRIOR TO CONSTRUCTION. REPORT ANY DIFFERENCE BETWEEN THE WATER PRESSURE INDICATED ON THE DRAWINGS AND THE ACTUAL PRESSURE READING AT THE IRRIGATION POINT OF CONNECTION TO THE CITY ENGINEER.

11. PIPE SIZING SHOWN ON THE DRAWINGS IS TYPICAL. AS CHANGES IN LAYOUT OCCUR DURING STAKING AND CONSTRUCTION THE SIZE MAY NEED TO BE ADJUSTED ACCORDINGLY.

12. PIPE THREAD SEALANT COMPOUND SHALL BE PERMATEX 51 OR RECTOR SEAL T+2 OR EQUIVALENT.

13. THE IRRIGATION CONTRACTOR SHALL BE RESPONSIBLE FOR MINOR CHANGES IN THE IRRIGATION LAYOUT DUE TO OBSTRUCTIONS NOT SHOWN ON THE IRRIGATION DRAWINGS SUCH AS LIGHTS, FIRE HYDRANTS, SIGNS, ELECTRICAL ENCLOSURES, ETC.

14. INSTALL CARSON PLASTIC VALVE BOXES, OR EQUIVALENT, WITH REINFORCED BOLT DOWN LID. BOX BODY SHALL HAVE KNOCK OUTS. REFER TO SPECIFICATIONS FOR VALVE BOX DIMENSIONS AND REQUIREMENTS.

15. SUBSURFACE EMITTER FLOW RATE, EMITTER SPACING AND LATERAL SPACING IS BASED ON TYPICAL SOILS ENCOUNTERED IN THE AREA. THE CONTRACTOR SHALL MAKE ANY MODIFICATIONS TO THE EMITTER FLOW RATE, EMITTER SPACING, AND LATERAL SPACING AS REQUIRED TO COMPLY WITH THE MANUFACTURER'S RECOMMENDATIONS FOR AN EVEN WETTED PATTERN BASED ON ACTUAL SOIL ANALYSIS. REFER TO DRIPLINE MANUFACTURER'S RECOMMENDATIONS FOR ADDITIONAL INFORMATION. FINAL EMITTER SPACING AND FLOW RATE TO BE APPROVED BY CITY ENGINEER.

16. CONTRACTOR SHALL ADJUST THE DRIPLINE LAYOUT, WHEN PLANTER SLOPE IS GREATER THAN 5 PERCENT, TO PROVIDE LATERAL ROW SPACING THAT IS 25 PERCENT GREATER WITHIN THE BOTTOM ONE-THRID OF THE SLOPE.

17. LOCATIONS AND QUANTITIES OF FLUSH VALVES AND AIR/VACUUM RELIEF VALVES (AVRV) SHOWN ON PLANS ARE APPROXIMATE. CONTRACTOR IS RESPONSIBLE FOR VERIFYING HIGHEST POINTS OF EACH HYDROZONE AND LOCATING AVRV'S AS REQUIRED AND FOR INSTALLING ADDITIONAL FLUSH VALVES AS NEEDED ACCORDING TO THE DRIPLINE MANUFACTURER'S GALLONS PER HOUR REQUIREMENTS PER HYDROZONE AT NO ADDITIONAL COST TO THE CITY.

18. ALL VALVES PROVIDING IRRIGATION TO SLOPED AREAS SHALL BE SCHEDULED IN MULTIPLE, SHORT CYCLES TO HELP ELIMINATE IRRIGATION WATER RUNOFF.

PIPE SIZING CHART (FOR REFERENCE ONLY) CLASS 200 IPS U.S. PVC PLASTIC PIPE

SIZE	GALLONS PER MINIMUM (GPM)
0.75"	1-5
1"	5-10
1.25"	10-18
1.5"	18-26
2"	26-46

PIPE/WIRE SLEEVING CHART (FOR REFERENCE ONLY)

PVC SLEEVE SIZE (PVC SCH. 40 PVC)	IRRIGATION PIPE/ WIRING CONDUIT MAXIMUM SIZE
1.25"	N/A
1.5"	0.5"
2"	0.75"
2.5"	1"
3"	1.25"
4"	1.25" - 2"
6"	2.5" - 3"
8"	4"
12"	6"

MAXIMUM NUMBER OF WIRES TO BE INSTALLED SLEEVING OR CONDUIT (FOR REFERENCE ONLY)

WIRE SIZE	CONDUIT / SLEEVE SIZE						
	1.25"	1.5"	2"	2.5"	3"	4"	6"
	MAXIMUM AMOUNT OF WIRES ALLOWED						
14	1 - 18	25	40	56	88	120	120+
12	1 - 15	20	33	50	75	102	102+
10	1 -13	16	27	40	63	85	85+

IRRIGATION LEGEND

SYMBOL	NUMBER	DESCRIPTION
F	4660-S	NIBCO 1/2" SIZE, SxS
A	PLD-AVR	HUNTER AIR/VACUUM RELIEF VALVE
	ICZ-101-LF OR ICZ-151	HUNTER REMOTE CONTROL VALVE DRIP KIT WITH IN-LINE FILTER AND PRESSURE REGULATOR. VALVES WITH FLOWS FROM 0.5 to 15 GPM USE ICZ-101-LF; VALVE WITH FLOWS ABOVE 20 USE ICZ-151.
	44 SERIES	RAINBIRD QUICK-COUPLER VALVE
G	T-113-K	NIBCO ISOLATION GATE VALVE
C	RME18EGi-SPED	RAIN MASTER TOP ENTRY PEDESTAL CONTROLLER.
W	RM-WETHR-ETRS	RAIN MASTER WEATHER STATION. CONNECT TO CONTROLLER USING RAIN MASTER MODEL #EV-CAB-WS12 COMMUNICATION CABLE. CONTRACTOR SHALL RUN COMMUNICATION CABLE WITHIN 1-INCH GREY PVC CONDUIT. INSTALL JUNCTION BOXES AS NEEDED AS PER MANUFACTURER RECOMMENDATIONS.
M	3200	SUPERIOR NORMALLY CLOSED MASTER VALVE: 1-1/2" SIZE.
F	FS-150	RAIN MASTER PLASTIC FLOW SENSOR, 1-1/2" SIZE (PVC TEE). CONNECT TO CONTROLLER USING RAIN MASTER MODEL #EV-CAB-SEN COMMUNICATION CABLE. CONTRACTOR SHALL RUN SENSOR COMMUNICATION WIRE AND MASTER VALVE REMOTE CONTROL WIRES WITHIN 1-INCH GREY PVC CONDUIT.
		MAIN LINE: 2"-SIZE; 1120-SCHEDULE 40 PVC PLASTIC PIPE WITH SCHEDULE 40 PVC SOLVENT WELD FITTINGS. 18" COVER. (PURPLE PIPE)
		LATERAL LINE: SIZE AS NOTED ON PLAN; CLASS 200 PVC PLASTIC PIPE WITH SCHEDULE 40 PVC SOLVENT WELD FITTINGS. 12" COVER. (PURPLE PIPE)
		SURFACE DRIPLINE: HUNTER PLD TUBDING WITH HUNTER BARB FITTINGS. INSTALL IN UNIFORM GRID PATTERN AS DETAILED AND NOTED ON DRAWINGS AND AS PER MANUFACTURER'S INSTRUCTIONS. INSTALL UNDER MULCH. CONTRACTOR SHALL USE PLD-10-12 IN ALL STORMWATER PLANTERS AND PLD-04-18 IN ALL OTHER PLANTING AREAS. PLD-10-12 SHALL BE SPACED AT 12-INCHES O.C, PLD-10-12 SHALL BE SPACED AT 18-INCHES O.C.
		SUBSURFACE DRIPLINE: HUNTER ECO-WRAP TUBING WITH HUNTER BARB FITTINGS. INSTALL IN UNIFORM GRID PATTERN AS DETAILED AND NOTED ON DRAWINGS AND AS PER MANUFACTURER'S INSTRUCTIONS. CONTRACTOR SHALL INSTALL ECO-WRAP IN TURF AREAS WITHIN 24-INCHES OF SIDEWALK AS SHOWN ON PLANS. SPACE AT 12-INCHES O.C.
		SLEEVING: 1120-SCH. 40 PVC PLASTIC PIPE. COVER TO BE AS INDICATED IN SPECIFICATIONS OR AS INDICATED ABOVE FOR PIPE DEPTH OF COVER. (PURPLE PIPE). REFER TO PIPE/WIRE SLEEVING CHART, THIS PAGE, FOR SIZING INFORMATION

Know what's **below**
Call before you dig.

NO.	REVISION	BY	DATE
1	35% CD	MSG	02-20-15
2	65% CD	MSG	05-06-15
3	95% CD	MSG	09-18-15
4	100% CD	MSG	01-05-17

DESIGNED MSG
DRAWN AND
CHECKED MSG
APPROVED
DATE

PROJECT NAME
FREITAS PKWY & LAS GALLINAS INTERSECTION IMP PROJECT
DRAWING NAME
IRRIGATION NOTES AND LEGEND
SAN RAFAEL COUNTY OF MARIN CALIFORNIA

LICENSED LANDSCAPE ARCHITECT
MATTHEW S. GABER
No. 3740
Signature
6/08/2016
Renewal Date
12/16/2015
Date
STATE OF CALIFORNIA

CSW|ST2
CSW/Stuber-Stroeh Engineering Group, Inc.
45 Leveroni Court
Novato, CA 94949
tel: 415.883.9850
fax: 415.883.9835
Civil & Structural Engineers
Surveying & Mapping
Environmental Planning
Land Planning
Construction Management

MIG
800 HEARST AVENUE
BERKELEY, CA 94710
TEL 510 845 7549
FAX 510 845 8570
www.migcom.com

CITY OF SAN RAFAEL DEPARTMENT OF PUBLIC WORKS

SCALE:
DATE: 05-06-15
CITY PROJECT NO.: 11171
SHEET NO.: L2.0
DRAWING: 27 OF 36

RECYCLED WATER NOTES - IRRIGATION

1. REGULATIONS –PRIOR TO START OF WORK CONTRACTORS SHALL FAMILIARIZE THEMSELVES WITH ALL STATE AND LOCAL LAWS, CODES, REGULATIONS, AND ORDINANCES PERTAINING TO THE INSTALLATION, USE, AND OPERATION OF RECYCLED WATER.

2. APPROVED PLANS –CONTRACTOR SHALL CONDUCT ALL WORK FROM PLANS APPROVED AND STAMPED BY MMWD.

3. CONTROLLER – RECYCLED WATER CONTROLLERS SHALL BE DESIGNATED FOR RECYCLED WATER USE ONLY AND SHALL NOT CONTROL ANY POTABLE WATER IRRIGATION SYSTEM. EACH RECYCLED WATER CONTROLLER SHALL HAVE A SIGN (SUPPLIED BY MMWD) NOTING RECYCLED WATER OPERATING PARAMETERS. LOCATION OF THIS SIGN SHALL BE AT THE DIRECTION OF MMWD.

4. IRRIGATION SCHEDULE* –THE CONTRACTOR SHALL PROVIDE MMWD A DETAILED IRRIGATION SCHEDULE FOR EACH RECYCLED WATER CONTROLLER. IRRIGATION SCHEDULES SHALL INCLUDE A COLOR CODED MAP DEPICTING AREAS SERVED BY EACH CONTROL VALVE. SCHEDULING OF ALL OVERHEAD SPRAY IRRIGATION SYSTEMS SHALL BE RESTRICTED TO THE HOURS OF 9:00 P.M. 6:00 A.M.

5. PRESSURE REGULATION –A PRESSURE REDUCING VALVE (PRV) SHALL BE INSTALLED BETWEEN THE RECYCLED WATER METER AND THE FIRST CONTROL VALVE. THE PRV SHALL BE SET SO THAT ALL COMPONENTS OF THE IRRIGATION SYSTEM OPERATE AT THE MANUFACTURER'S RECOMMENDED OPTIMAL PRESSURE. ADDITIONAL PRESSURE COMPENSATING DEVICES MAY BE NECESSARY TO MEET EQUIPMENT MANUFACTURER'S SPECIFICATIONS.

6. QUICK COUPLERS –QUICK COUPLERS (QC) SHALL HAVE LOCKING, PURPLE COLOR THERMOPLASTIC COVERS MARKED WITH "DO NOT DRINK"IN ENGLISH AND SPANISH AND SHALL INCLUDE THE INTERNATIONAL SYMBOL FOR "DO NOT DRINK". QC'S SHALL BE INSTALLED IN PLANTER AREAS, IN ROUND IRRIGATION VALVE BOXES.

7. IRRIGATION CONTROL VALVES –USE OF SPECIAL IRRIGATION CONTROL VALVES (DIRTY WATER SHALL NOT BE REQUIRED.

8. IRRIGATION VALVE BOXES –VALVE BOXES SHALL BE PURPLE IN COLOR, SHALL BE INSTALLED IN PLANTERS, AND SHALL BE GROUPED WHENEVER POSSIBLE. THIS REQUIREMENT SHALL NOT APPLY TO SUBTERRANEAN EMITTER BOXES.

9. PIPING –ALL NEW BURIED IRRIGATION PIPE (PVC) SHALL BE PURPLE PVC WITH "CAUTION RECYCLED WATER DO NOT DRINK"CLEARLY IMPRINTED ON THE PIPE. ALL COPPER PIPE AND/OR IRRIGATION PIPE INSTALLED INSIDE A STRUCTURE SHALL COMPLY WITH THE PROVISIONS OF THE CALIFORNIA PLUMBING CODE FOR MARKING RECYCLED WATER PIPING SYSTEMS.

10. WATER WASTE –IRRIGATION SYSTEM COMPONENTS SHALL BE INSTALLED AND ADJUSTED TO PREVENT RECYCLED WATER FROM LEAVING THE LANDSCAPE AREA VIA OVERSPRAY, MIST, OF RUNOFF. CHECK VALVES SHALL BE INSTALLED AT EACH SPRINKLER HEAD WHERE LOW HEAD DRAINAGE MAY OCCUR. SLOPES GREATER THAN 15% SHALL NOT BE IRRIGATED BY ANY FORM OF SPRAY IRRIGATION.

11. APPURTENANCE IDENTIFICATION* –ALL APPURTENANCES WITHIN THE IRRIGATION SYSTEM,I.E., CONTROL VALVES, SHUT–OFF VALVES, QUICK COUPLERS, ETC. SHALL HAVE ATTACHED, BY NYLON WIRE TIE AN IDENTIFICATION TAG AS MANUFACTURED BY T. CHRISTY ENTERPRISES. TAGS SHALL READ "WARNING RECYCLED WATER DO NOT DRINK", IN ENGLISH AND SPANISH.

12. INSPECTIONS –ALL IRRIGATION PIPE AND COMPONENTS INSTALLED IN A RECYCLED WATER IRRIGATION SYSTEM SHALL BE INSPECTED BY THE MMWD PRIOR TO BURIAL. CONTRACTOR SHALL CONTACT THE MMWD RECYCLED WATER SECTION AT LEAST THREE (3) WORKING DAYS PRIOR TO START OF WORK.

13. SEPARATION TEST –CONTRACTOR SHALL PERFORM A RECYCLED WATER SYSTEM SEPARATION TEST IN THE PRESENCE OF AN MMWD RECYCLED WATER city engineer FOLLOWING INSTALLATION OF THE IRRIGATION SYSTEM AND PRIOR TO ACTIVATION OF THE RECYCLED WATER SERVICE.

14. COVERAGE TEST –CONTRACTOR SHALL PERFORM AN IRRIGATION SYSTEM COVERAGE TEST IN THE PRESENCE OF AN MMWD RECYCLED WATER city engineer FOLLOWING THE INSTALLATION OF THE IRRIGATION SYSTEM PRIOR TO FINAL APPROVAL.

15. FINAL APPROVAL –FINAL PROJECT APPROVAL SHALL BE GRANTED FOLLOWING INSTALLATION OF ALL SYSTEM COMPONENTS, A SEPARATION TEST AND COVERAGE TEST HAS BEEN CONDUCTED AND ALL CODES, REGULATIONS, AND ORDINANCES HAVE BEEN SATISFIED.

EXISTING IRRIGATION NOTES

1. CONTRACTOR SHALL VERIFY (POTHOLE IF NECESSARY) SIZE, MATERIAL, LOCATION AND DEPTH OF ALL SYSTEMS THAT ARE TO BE CONNECTED TO OR CROSSED PRIOR TO TRENCHING OR INSTALLATION OF ANY IRRIGATION COMPONENTS.

2. THE CONTRACTOR SHALL FAMILIARIZE THEMSELVES WITH ADJACENT EXISTING IRRIGATION SYSTEM AND SHALL OPERATE EACH EXISTING HYDROZONE, TO REMAIN IN OPERATION, WITHIN AND ADJACENT TO THE PROJECT LILMIT–OF–WORK AREAS PRIOR TO THE START OF WORK. CONTRACTOR SHALL DOCUMENT ANY BROKEN OR MALFUNCTIONING PIECE OF EQUIPMENT AND PROVIDE THE ENGINEER WITH A WRITTEN REPORT. ANY REPAIRS REQUIRED TO COMPONENTS NOT NOTED IN THE REPORT SHALL BECOME RESPONSIBILITY OF THE CONTRACTOR AND ALL REPAIR WORK SHALL BE TO THE SATISFACTION OF THE ENGINEER.

3. NO DISRUPTION OF THE EXISTING IRRIGATION SYSTEM WATERING OR OPERATION SHALL BE ALLOWED DURING CONSTRUCTION. CONTRACTOR SHALL MAINTAIN WATERING DURING CONSTRUCTION AND MAKE ALL NECESSARY PROVISIONS REQUIRED TO ENSURE IRRIGATION WATERING IS NOT IMPACTED BY LOSS OF POWER OR REMOVAL OF EXISTING CONTROLLER.

4. ALL EXISTING IRRIGATION CONTROL VALVES CONNECTED TO EXISTING CONTROLLER SHALL BE RECONNECTED TO NEW CONTROLLER UNLESS OTHERWISE DIRECTED ENGINEER. CONTRACTOR SHALL CONFIRM PROPER OPERATION OF EXISTING VALVES WITH ENGINEER UPON COMPLETION OF WORK. REFER TO PLAN FOR ADDITIONAL INFORMATION.

NO.	REVISION	BY	DATE
1	35% CD	MSG	02-20-15
2	65% CD	MSG	05-06-15
3	95% CD	MSG	09-18-15
4	100% CD	MSG	01-05-17

DESIGNED MSG
DRAWN AND
CHECKED MSG
APPROVED
DATE

PROJECT NAME
FREITAS PKWY & LAS GALLINAS INTERSECTION IMP PROJECT

DRAWING NAME
RECYCLED WATER NOTES – IRRIGATION

SAN RAFAEL COUNTY OF MARIN CALIFORNIA

LICENSED LANDSCAPE ARCHITECT
MATTHEW S. GUBSER
No. 5140
Signature
6/08/2016
Renewal Date
12/16/2015
Date
STATE OF CALIFORNIA

CSW|ST2
CSW/Stuber-Stroeh Engineering Group, Inc.
64 Pamaron Way
Novato, CA 94949
tel: 415.883.9850
fax: 415.883.9835
Civil & Structural Engineers
Surveyors & Planners
Environmental Planning
Construction Management

MIG
TEL 510.845.7549
FAX 510.845.8750
www.migcom.com
BERKELEY • DAVIS
SACRAMENTO • TAHOE

CITY OF SAN RAFAEL
DEPARTMENT OF
PUBLIC WORKS

SCALE:
DATE: 05-06-15
CITY PROJECT NO.: 11171
SHEET NO.: L2.1
DRAWING: 28 OF 36

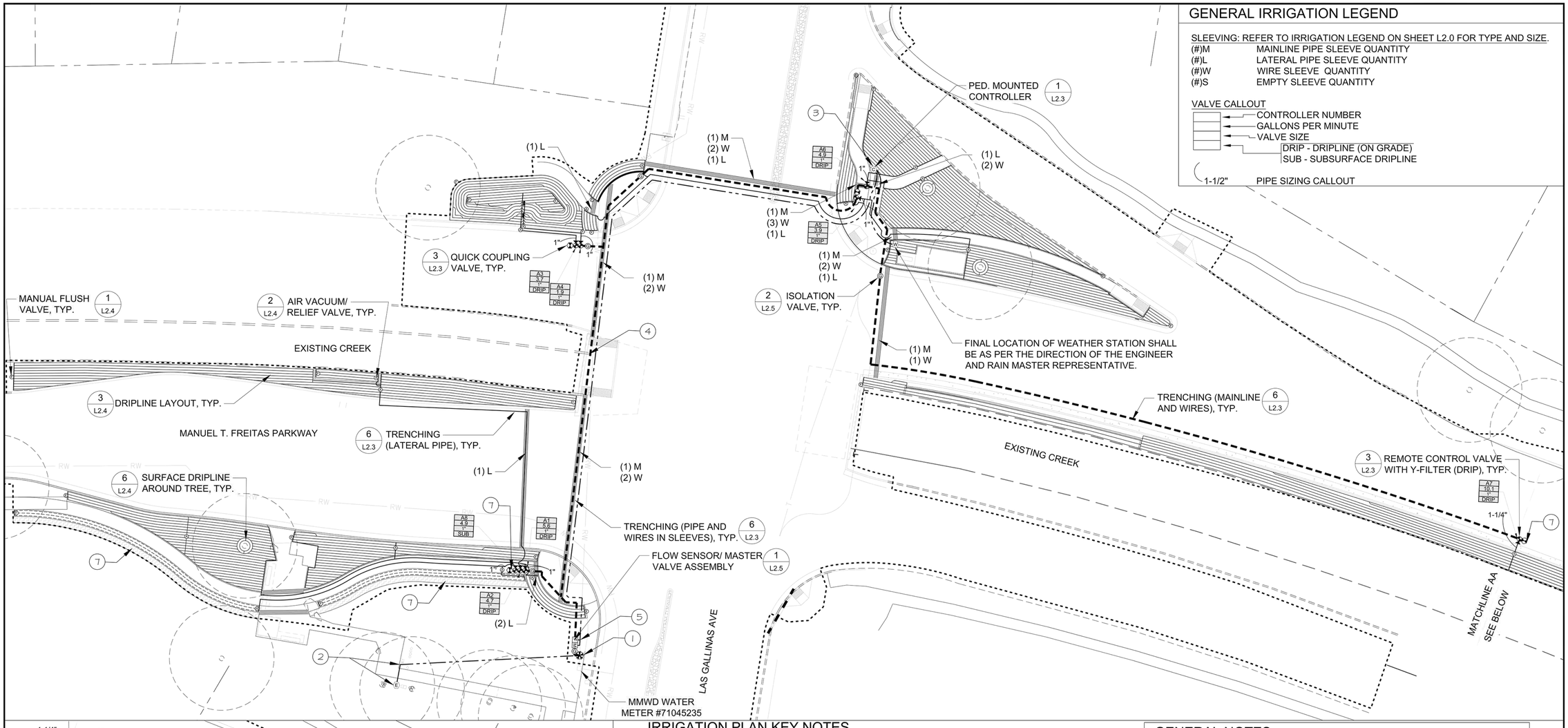

GENERAL IRRIGATION LEGEND

SLEEVING: REFER TO IRRIGATION LEGEND ON SHEET L2.0 FOR TYPE AND SIZE.

(#)M	MAINLINE PIPE SLEEVE QUANTITY
(#)L	LATERAL PIPE SLEEVE QUANTITY
(#)W	WIRE SLEEVE QUANTITY
(#)S	EMPTY SLEEVE QUANTITY

VALVE CALLOUT

- CONTROLLER NUMBER
- GALLONS PER MINUTE
- VALVE SIZE
- DRIP - DRIPLINE (ON GRADE)
- SUB - SUBSURFACE DRIPLINE

1-1/2" PIPE SIZING CALLOUT

IRRIGATION PLAN KEY NOTES

1. POINT-OF-CONNECTION: APPROXIMATE LOCATION OF (E) IRRIGATION RECYCLED WATER MAINLINE. FIELD VERIFY. CONTRACTOR TO CONNECT MAINLINE DOWNSTREAM OF (E) VALVE USING APPROPRIATE FITTINGS AND ROUTE AS SHOWN ON PLANS.
2. EXISTING AUTOMATIC IRRIGATION CONTROLLER: APPROXIMATE LOCATION OF (E) CONTROLLER; CONTRACTOR SHALL REMOVE (E) CONTROLLER, PAD, ETC. WHILE PROTECTING (E) REMOTE CONTROL WIRES, AND DISPOSE OF CONTROLLER. EXTEND AND CONNECT ALL (E) REMOTE CONTROL WIRES TO NEW CONTROLLER. FIELD VERIFY NUMBER OF EXISTING WIRES AND NOTIFY ENGINEER OF EXISTING TOTAL PRIOR TO CONTROLLER INSTALLATION. INSTALL WIRES WITHIN CONDUIT ONLY WHEN WIRES ARE NOT LOCATED ADJACENT TO MAINLINE PIPING. ALL SPLICES SHALL BE MADE WITHIN CONCRETE VALVE BOX.
3. APPROXIMATE LOCATION OF CONTROLLER. FINAL LOCATION AS APPROVED BY ENGINEER. CONTRACTOR PROVIDE ALL NECESSARY CONDUITS AND CONDUCTORS AND SHALL CONNECT CONTROLLER TO POWER SOURCE. REFER TO TRAFFIC SIGNAL PLANS FOR ELECTRICAL POINT-OF-CONNECTION.
4. ROUTE MAINLINE, REMOTE CONTROL WIRES AND SENSOR WIRES THROUGH WEST BRIDGE SECTION. REFER TO STRUCTURAL PLANS FOR ADDITIONAL INFORMATION.
5. FLOW SENSOR AND MASTER VALVE CONTROL WIRES WITHIN CONDUIT. REFER TO LEGEND FOR ADDITIONAL INFORMATION. AT WEST BRIDGE SECTION, INSTALL WITHOUT CONDUIT ALONG SIDE REMOTE CONTROL WIRES.
6. CONTRACTOR SHALL ADJUST (E) IRRIGATION HEADS AND PROVIDE ADDITIONAL IRRIGATION HEADS IN THIS AREA AS REQUIRED TO MAINTAIN AND PROVIDE HEAD-TO-HEAD COVERAGE OF ALL TURF AREAS TO REMAIN. LOCATE HEADS OUTSIDE OF SUBSURFACE DRIP AREAS.
7. CONTRACTOR TO RUN FOUR (4) SPARE REMOTE CONTROL WIRES AND ONE (1) SPARE COMMON WIRE FROM THE CONTROLLER TO LOCATION AS SHOWN. CONTRACTOR TO LABEL AND WATERPROOF ENDS OF SPARE WIRES AND PLACE IN ROUND VALVE BOX.

GENERAL NOTES

1. REFER TO THE IRRIGATION EQUIPMENT LEGEND ON SHEET AND THE GENERAL IRRIGATION NOTES ON SHEET L2.0 FOR ADDITIONAL INFO.
2. REFER TO THE IRRIGATION DETAIL SHEETS L2.3 THROUGH L2.5 AND THE IRRIGATION TECHNICAL SPECIFICATIONS AS PART OF THESE CONSTRUCTION DOCUMENTS AND FOR ADDITIONAL INFORMATION.
3. ALL MAINLINE, LATERAL PIPE, VALVES, AND OTHER IRRIGATION SYSTEM APPURTENANCES SHOWN IN PAVED AREA IS FOR GRAPHICAL CLARITY ONLY. CONTRACTOR TO PLACE MAINLINE, LATERAL PIPE, VALVES AND ALL IRRIGATION APPURTENANCES WITHIN ADJACENT PLANTING AREAS.
4. CONTRACTOR SHALL ROUTE ALL IRRIGATION MAINLINE, LATERAL PIPE AND SLEEVES AROUND ALL SERVICE LINES, UTILITIES, STORM DRAINAGE FACILITIES, ETC. IN ORDER TO AVOID ANY CONFLICTS IN THE FIELD. INSTALL IRRIGATION PIPE BELOW STORM DRAINAGE PIPES WHERE REQUIRED TO MAINTAIN THE MINIMAL DEPTH REQUIREMENTS.

0 10' 20' 40'

NORTH

811 Know what's **below** **Call** before you dig.

NO.	REVISION	BY	DATE
1	35% CD	MSG	02-20-15
2	65% CD	MSG	05-06-15
3	95% CD	MSG	09-18-15
4	100% CD	MSG	01-05-17

DESIGNED MSG
DRAWN AND
CHECKED MSG
APPROVED
DATE

PROJECT NAME
FREITAS PKWY & LAS GALLINAS INTERSECTION IMP PROJECT
SAN RAFAEL COUNTY OF MARIN CALIFORNIA

DRAWING NAME
IRRIGATION PLAN

LICENSED LANDSCAPE ARCHITECT MATTHEW S. CARBER 3240 Signature 6/08/2016 Renewal Date 12/16/2015 Date STATE OF CALIFORNIA

CSW/ST2
CSW/Stuber-Stroeh Engineering Group, Inc.
45 Leveroni Court
Novato, CA 94949
tel: 415.883.9850
fax: 415.883.9835
Civil & Structural Engineers
Land Development
Environmental Planning
Surveying & Mapping
Construction Management

MIG
180 HOWARD AVENUE
BURLINGAME, CA 94010
TEL 510.845.7549
FAX 510.845.8150
www.migcom.com

CITY OF SAN RAFAEL
DEPARTMENT OF
PUBLIC WORKS

SCALE:
DATE: 05-06-15
CITY PROJECT NO.: 11171
SHEET NO.: L2.2
DRAWING: 29 OF 36

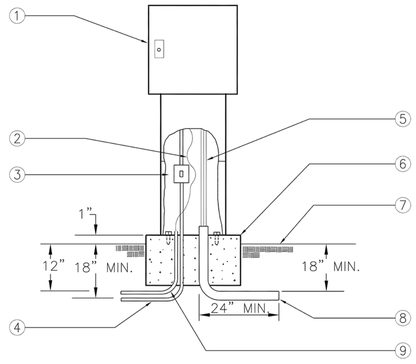

1. IRRIGATION CONTROLLER
2. #6 BARE COPPER GROUND WIRE
3. 120 VOLT LOCKABLE WEATHERPROOF ON/OFF SWITCH PROVIDED UNDER IRRIGATION CONTRACT
4. 120 VOLT A.C. ELECTRICAL SERVICE FROM SOURCE TO CONTROLLER LOCATION PROVIDED BY ELECTRICAL CONTRACTOR. IRRIGATION CONTRACTOR TO PROVIDE RIGID STEEL CONDUIT FROM SERVICE STUB-OUT TO CONTROLLER GCFI SWITCH AND COMPLETE ELECTRICAL SERVICE TO CONTROLLER.
5. LOW VOLTAGE CONTROL WIRING
6. CONCRETE PAD-6" THICK (MIN.) EXTEND 6" BEYOND EACH SIDE AND BACK, 24" IN FRONT AND 1" ABOVE FINISH GRADE
7. FINISH GRADE
8. SCHEDULE 40 GREY PVC ELECTRICAL CONDUIT WITH SWEEP ELL FOR LOW VOLTAGE WIRE PROVIDED UNDER IRRIGATION CONTRACT
9. 1 1/2" PVC SWEEP ELL FOR GROUND WIRE

1 PEDESTAL MOUNTED CONTROLLER

SCALE: NONE
DET: PED-CONT

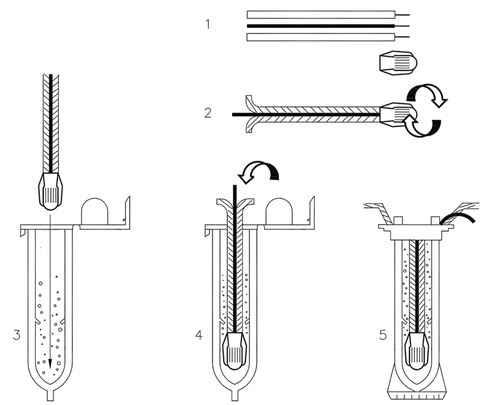

INSTRUCTIONS:

1. STRIP WIRES APPROXIMATELY 1/2" (12.7 MM) TO EXPOSE WIRE.
2. TWIST CONNECTOR AROUND WIRES CLOCKWISE UNTIL HAND TIGHT, DO NOT OVERTIGHTEN.
3. INSERT WIRE ASSEMBLY INTO PLASTIC TUBE UNTIL WIRE CONNECTOR SNAPS PAST LIP IN BOTTOM OF TUBE.
4. PLACE WIRES WHICH EXIT TUBE IN WIRE EXIT HOLES AND CLOSE CAP UNTIL IT SNAPS.
5. INSPECT FINAL SPLICE ASSEMBLY TO BE SECURE AND FINISHED.

2 WEATHERPROOF SPLICE ASSEMBLY

SCALE: NONE
DET: WIRE-SPL

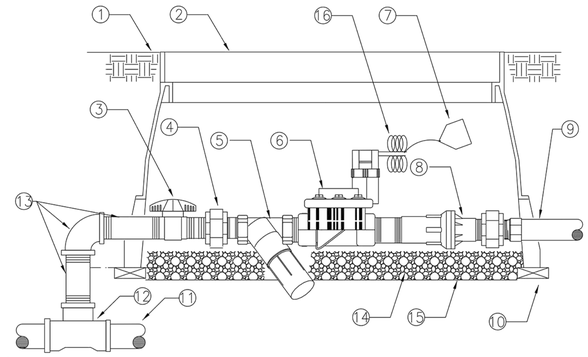

1. FINISH GRADE
2. PERMANENTLY STAMP VALVE BOX LID WITH VALVE IDENTIFICATION (CONTROLLER AND STATION NUMBER)

   RECTANGULAR PLASTIC VALVE BOX WITH BOLT DOWN LID. ONE VALVE PER BOX- NO EXCEPTIONS. INSTALL BOX AS SHOWN IN BOX INSTALLATION DETAIL. TOP DIMENSION: 11 3/4" X 17" (12" DEEP). SEE DETAIL 5 ON SHEET L2.3.
3. BALL VALVE
4. SCHEDULE 80 PVC THREADED UNION-2 TOTAL
5. FILTER
6. REMOTE CONTROL VALVE WITH FLOW CONTROL AND MANUAL BLEED
7. VALVE I.D. TAG (CONTROLLER AND STATION NUMBER)
8. PRESSURE REGULATOR
9. PVC LATERAL LINE
10. BRICK-1 EACH CORNER
11. SCHEDULE 40 MAIN LINE- RECYCLED WATER
12. UPC APPROVED SCHEDULE 40 PVC TEE
13. SCHEDULE 40 PIPE AND THREADED FITTINGS (AS REQUIRED)
14. PEA GRAVEL- 4" DEEP BELOW VALVE (NO SOIL IN VALVE BOX)
15. 22 GAUGE 1" SQUARE WIRE MESH
16. VALVE CONTROL WIRE- PROVIDE 3M-DBY SEAL PACKS AT ALL SPLICES AND 36" OF EXCESS UF WIRE IN A 1" DIAMETER COIL. SEE DETAIL 2 ON SHEET L2.3.

3 REMOTE CONTROL VALVE WITH Y-FITLER (DRIP)

SCALE: NONE

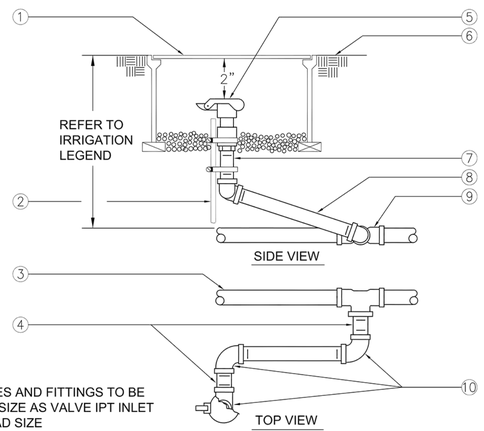

NOTE:
NIPPLES AND FITTINGS TO BE SAME SIZE AS VALVE IPT INLET THREAD SIZE

1. ROUND PLASTIC VALVE BOX WITH BOLT DOWN LID. TOP DIMENSION: 10".
2. 1 1/4" x 1 1/4" x 3/16" ANGLE IRON 30" LONG W/2 STAINLESS STEEL STRAPS (ONE AROUND QCV)
3. PVC MAIN LINE
4. 3" LONG SCHEDULE 80 PVC THREADED NIPPLE
5. QUICK COUPLING VALVE
6. FINISH GRADE
7. SCHEDULE 80 PVC THREADED NIPPLE
8. 10" LONG SHCEDULE 80 PVC THREADED NIPPLE
9. UPC APPROVED SCHEDULE 40 PVC TEE OR ELBOW
10. SCHEDULE 80 PVC THREADED 90° ELL

4 QUICK COUPLING VALVE

SCALE: NONE
DET: QUICK-C2

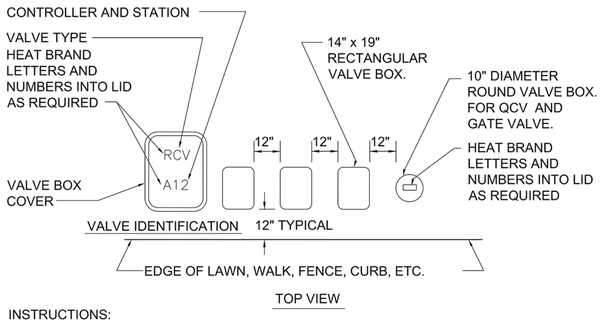

INSTRUCTIONS:

1. ALL VALVE BOXES AND COVERS SHALL BE PURPLE IN COLOR.
2. CENTER VALVE BOX OVER REMOTE CONTROL VALVE TO FACILITATE SERVICING VALVE.
3. SET BOXES 1" ABOVE FINISH GRADE OR MULCH COVER IN GROUND COVER/SHRUB AREA AND FLUSH WITH FINISH GRADE IN TURF AREA.
4. SET RCV AND VALVE BOX ASSEMBLY IN GROUND COVER/SHRUB AREA WHERE POSSIBLE. INSTALL IN LAWN ONLY IF GROUND COVER DOES NOT EXIST ADJACENT TO LAWN.
5. SET BOXES PARALLEL TO EACH OTHER AND PERPENDICULAR TO EDGE OF LAWN, WALK, FENCE, CURB, ETC.
6. AVOID HEAVILY COMPACTING SOIL AROUND VALVE BOXES TO PREVENT COLLAPSE AND DEFORMATION OF VALVE BOX SIDES.
7. INSTALL EXTENSION BY VALVE BOX MANUFACTURER AS REQUIRED TO COMPLETELY ENCLOSE ASSEMBLY FOR EASY ACCESS.
8. ALL VALVE BOX COVERS SHALL BE LOCKING TYPE AND INCLUDE BOLT-DOWN HARDWARE.

5 VALVE BOX INSTALLATION

SCALE: NONE
DET: VALVE-B1

NOTES:

1. INSTALL SUPPLY LINE AND LATERALS IN SLEEVING IF REQUIRED PER PLAN. SLEEVES SHALL EXTAND A MINIMUM OF 6" BEYOND EDGE OF PAVING.

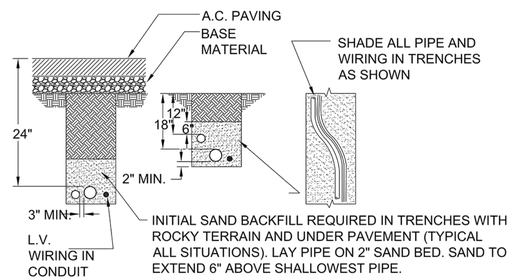

6 TRENCHING

Scale: NONE

NO.	REVISION	BY	DATE
1	35% CD	MSG	02-20-15
2	65% CD	MSG	05-06-15
3	95% CD	MSG	09-18-15
4	100% CD	MSG	01-05-17

DESIGNED MSG
DRAWN AND
CHECKED MSG
APPROVED
DATE

PROJECT NAME
FREITAS PKWY & LAS GALLINAS INTERSECTION IMP PROJECT
SAN RAFAEL COUNTY OF MARIN CALIFORNIA

DRAWING NAME
IRRIGATION DETAILS

LICENSED LANDSCAPE ARCHITECT
MATTHEW S. GABER
2740
Signature
6/08/2016
Renewal Date
12/16/2015
Date
STATE OF CALIFORNIA

CSW|ST2
CSW/Stuber-Stroeh Engineering Group, Inc.
45 Leveroni Court
Novato, CA 94949
tel: 415 883 3850
fax: 415 883 3855
Civil & Structural Engineers
Surveyors & Planners
Environmental Planning
Construction Management

MIG
TEL: 510 845 7549
FAX: 510 845 8750
www.migcom.com
ECONOMICS
PLANNING
LANDSCAPE ARCHITECTURE

CITY OF SAN RAFAEL
DEPARTMENT OF PUBLIC WORKS

SCALE:
DATE: 05-06-15
CITY PROJECT NO.: 11171
SHEET NO.: L2.3
DRAWING: 30 OF 36

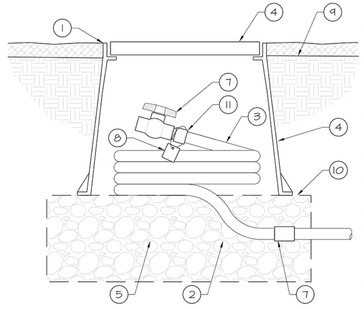

1. SET BOX FLUSH WITH MULCH LAYER
2. 1/2" FLEXIBLE PVC TUBING
3. COIL 1/2" FLEXIBLE PVC TUBING. 30" MIN. LENGTH.
4. 10" ROUND VALVE BOX WITH BOLT-DOWN LID. BRAND "FV" ON VALVE BOX LID.
5. 3/4" CRUSHED ROCK, 6" MIN. DEPTH. EXTEND 6" BEYOND VALVE BOX WALL.
6. SCHEDULE 40 BALL VALVE
7. SCHEDULE 40 P.V.C. COUPLING
8. TAG (SEE NOTE 2)
9. FINISH GRADE
10. 1/4" GALVANIZED WIRE CLOTH
11. 1/2" SCH. 40 MALE ADAPTER

NOTE:

1. 2" DEEP LAYER MULCH MATERIAL AS PER SPECIFICATIONS.
2. TAG EACH MANUAL FLUSH VALVE WITH A PERMANENT METAL TAG AND NUMBER TO COINCIDE WITH CONTROLLER STATION NUMBER. TAG SHALL BE PLACED TO AVOID BEING BURIED.

1 MANUAL FLUSH VALVE
SCALE: NONE

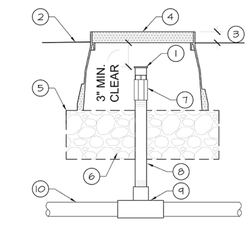

A ARV PLUMBED TO PVC PIPE SECTION ELEVATION

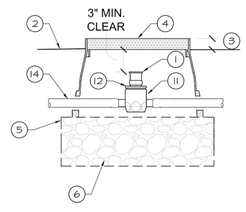

B ARV PLUMBED TO DRIPLINE SECTION ELEVATION

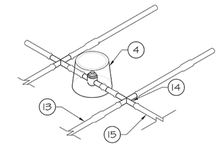

C ARV @ DRIPLINE ISOMETRIC

NOTES:

1. ARV VALVES SHALL BE INSTALLED IN VALVE BOXES AT HIGHEST POINTS WITHIN SUB-SURFACE DRIP SYSTEM PER MNF'R GUIDELINES.
2. SEE LEGEND FOR LATERAL DEPTH AND SPACING.

1. AIR VACUUM/RELIEF VALVE, REFER TO LEGEND
2. FINISH GRADE
3. SET TOP OF VALVE BOX ABOVE FINISH GRADE: 1/2" IN SEED, 1-1/2" IN SOD, 2-1/2" IN PLANTER
4. 10" ROUND VALVE BOX, SEE SPECS.
5. 1/4" GALVANIZED WIRE CLOTH
6. 3/4" CRUSHED ROCK, 6" MIN. DEPTH.
7. 1/2" PVC SCH. 80 COUPLING (THxTH)
8. 1/2" PVC SCH. 80 NIPPLE (LENGTH AS REQ.)
9. PVC REDUCTION TEE WITH 1/2" FEMALE THREADED INLET
10. PVC NON-PRESSURE LATERAL LINE. SIZE AND TYPE PER PLAN
11. 3/4" FPT COMBINATION TEE (INS x INS x TH)
12. 1/2" MPT REDUCER BUSHING.
13. DRIPLINE, TYPE AND DEPTH PER LEGEND
14. BARBED INSERT TEE FITTING, TYP.
15. BLANK POLYETHYLENE TUBING, TYP.

2 AIR VACUUM/ RELIEF VALVE
SCALE: NONE

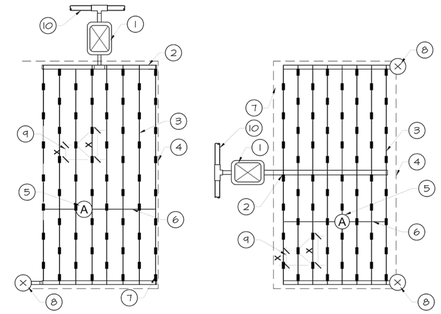

END FEED LAYOUT

CENTER FEED LAYOUT

NOTE:

REFER TO DETAILS 4, 5 AND 7 ON SHEET L2.4 FOR CONNECTION FROM NON PRESSURE PVC LATERAL SUPPLY LINE TO DRIPLINE AND ADDITIONAL LAYOUT INFORMATION.

1. REMOTE CONTROL DRIP ASSEMBLY IN VALVE BOX PER PLAN
2. NON-PRESSURE PVC LATERAL SUPPLY LINE, PER PLAN
3. DRIP LINE TUBING LATERAL PER IRRIGATION LEGEND
4. PLANTING AREA PERIMETER (SEE PLANS)
5. AIR/VACUUM RELIEF VALVE PER IRRIGATION LEGEND. INSTALL AT HIGH POINT OF SYSTEM, LOCATED IN FIELD
6. AIR/VACUUM RELIEF LATERAL BLANK DRIPLINE TUBING; CONNECT TO PERPENDICULAR TO DRIP LINE USING BARBED INSERT CROSS
7. INSTALL PERIMETER SUBSURFACE DRIPPERLINE 4" FROM HARDSCAPE, MOW CURB, HEADER, ETC.
8. FLUSH VALVE PER IRRIGATION LEGEND. PLUMBED TO DRIP LINE OR NON-PRESSURE PVC LATERAL SUPPLY LINE
9. DISTANCES PER PLANS
10. PRESSURE MAINLINE PER PLAN

3 DRIPLINE LAYOUT
SCALE: NONE

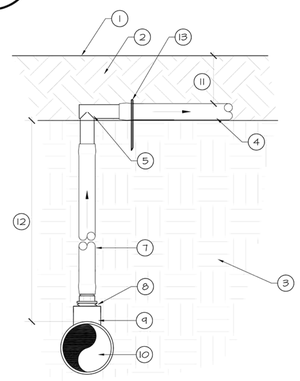

A MANIFOLD-ELL CONDITION

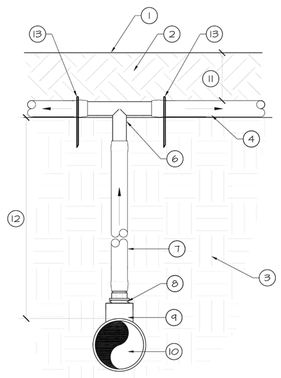

B MANIFOLD-TEE CONDITION

1. FINISH GRADE
2. APPROVED TOPSOIL BACKFILL, NO PARTICLES GREATER THAN 1-INCH. COMPACT SOIL TO 90% R.D. SEE PLANTING PLANS FOR MORE INFORMATION.
3. SUBGRADE, COMPACTED TO 90% R.D. REFER TO SPECS.
4. DRIPLINE TUBING, SEE LEGEND FOR TYPE AND SPACING.
5. BARBED DRIP ELBOW FITTING
6. BARBED DRIP TEE FITTING
7. BLANK POLYETHYLENE DRIP TUBING
8. BARBED X 1/2" MPT ADAPTER
9. PVC TEE (SLXSLXTH) WITH 1/2" FPT INLET
10. PVC LATERAL LINE, SIZE AND TYPE PER PLAN
11. DEPTH OF TUBING, REFER TO IRRIGATION LEGEND
12. DEPTH OF PVC LATERAL LINE, REFER TO SPECS.
13. 4" GALVANIZED STAPLE

4 DRIPLINE MANIFOLD SUPPLY
SCALE: NONE

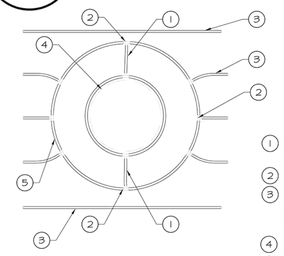

1. ½" BLANK POLYETHYLENE TUBING
2. BARB TEE INSERT FITTING TYP.
3. SUB-SURFACE DRIPLINE. PLACE AS SHOWN (LENGTH AS REQUIRED).
4. ROOT BALL
5. TIE DOWN STAKE. QUANTITY AS REQUIRED, SEE NOTES 2-3.

NOTES:

1. REFER TO IRRIGATION LEGEND FOR DISTANCE BETWEEN LATERAL RINGS AND EMITTER SPACING.
2. PLACE TIE DOWN STAKES EVERY THREE FEET IN SAND, F0UR FEET IN LOAM AND FIVE FEET IN CLAY.
3. AT FITTINGS WHERE THERE IS A CHANGE OF DIRECTION SUCH AS TEES OR ELBOWS, USE TIE-DOWN STAKES ON EACH LEG OF THE CHANGE OF DIRECTION.

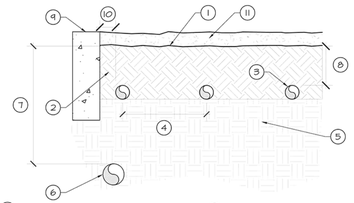

1. FINISH GRADE
2. TOPSOIL BACKFILL, NO PARTICLES GREATER THAN 1". COMPACT TO 90% R.D.
3. SUB-SURFACE DRIP LINE, SEE IRRIGATION PLAN.
4. SEE PLAN FOR SPACING INFO.
5. PREPARED SUBGRADE, COMPACTED TO 90% R.D. SEE SPECS.
6. PVC NON-PRESSURE LATERAL LINE PER IRRIGATION PLAN.
7. DEPTH OF PVC LATERAL LINE, SEE SPECS.
8. DEPTH OF SUB-SURFACE DRIPLINE, REFER TO IRRIGATION PLAN.
9. PLANTER EDGE
10. LOCATE PERIMETER DRIP LINE LATERALS 2" MIN. AND 4" MAX. AWAY FROM EDGES.
11. MULCH AND PLANTING MATERIAL PER PLANTING PLAN.

5 DRIPLINE TO PVC LATERAL LINE TRANSITION
SCALE: NONE

6 SUBSURFACE DRIPINE AROUND TREE
SCALE: NONE

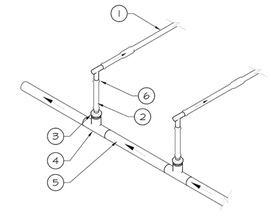

A END FEED MANIFOLD SUPPLY

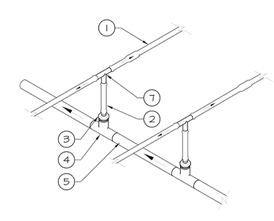

B CENTER FEED MANIFOLD SUPPLY

1. DRIP LINE, TYPE AND DEPTH PER LEGEND.
2. BLACK POLYETHYLENE BLANK POLY TUBING
3. BARB X MPT ADAPTER
4. PVC TEE WITH FPT OUTLET
5. NON-PRESSURE LATERAL DOWNSTREAM FROM REMOTE CONTROL ASSEMBLY
6. BARBED INSERT 90° ELL FITTING
7. BARBED INSERT TEE FITTING

7 SUBSURFACE DRIPINE
SCALE: NONE

NO.	REVISION	BY	DATE
1	35% CD	MSG	02-20-15
2	65% CD	MSG	05-06-15
3	95% CD	MSG	09-18-15
4	100% CD	MSG	01-05-17

DESIGNED MSG
DRAWN AND
CHECKED MSG
APPROVED
DATE

PROJECT NAME
FREITAS PKWY & LAS GALLINAS INTERSECTION IMP PROJECT
SAN RAFAEL COUNTY OF MARIN CALIFORNIA

DRAWING NAME
IRRIGATION DETAILS

LICENSED LANDSCAPE ARCHITECT
MATTHEW S. CARTER
No. 5740
Signature
6/08/2016
Renewal Date
12/16/2015
Date
STATE OF CALIFORNIA

CSWST2
CSW/Stuber-Stroeh Engineering Group, Inc.
4117 Rowland Way
Novato, CA 94949
tel: 415.883.9850
fax: 415.883.9855
Civil & Structural Engineers
Land Development Planning
Environmental Planning
Surveying
Construction Management

MIG
780 Third Street
Suite 200
San Rafael, CA 94901
415.546.1495
415.546.1499
www.migcom.com

CITY OF SAN RAFAEL
DEPARTMENT OF PUBLIC WORKS

SCALE:
DATE: 05-06-15
CITY PROJECT NO.: 11171
SHEET NO.: L2.4
DRAWING: 31 OF 36

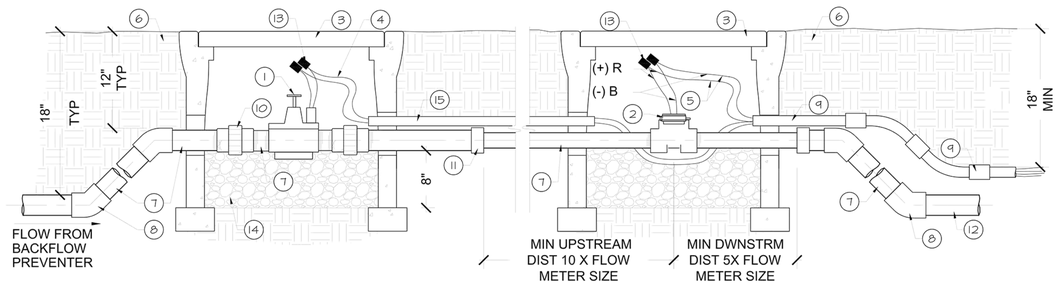

1. MASTER VALVE: MODEL & SIZE PER PLANS.
2. FLOW SENSOR SIZE AND MODEL PER PLANS.
3. CHRISTY B9 BOX CONC VALVE BOX WITH STEEL CHECKERED LID IN NON-TURF AREA, OR APPROVED EQ. TOP OF LID SHALL BE NON-SKID SURFACE, PERMANENTLY MARKED "MV" FOR MASTER VALVE AND 'FS' FOR FLOW SENSOR AS REQ'D. HOLD DOWN BOLTS SHALL BE N99HDB.
4. 2-#14 WIRES, BLUE W/ WHITE COMMON FROM MASTER VALVE TO CONTROLLER.
5. 2-#14 WIRES, BLACK & RED FROM FLOW SENSOR TO CONTROLLER.
6. FINISH GRADE
7. SCH 80 PVC NIPPLE
8. SCH.80 PVC ELL, 45°, TYP.
9. SCH. 40 PVC CONDUIT/COUPLINGS & WIRES TO CONTROLLER, SEE DETAILS
10. SCH. 80 PVC UNION TYP.
11. SCH.80 PVC REDUCE COUPLING IF REQUIRED
12. PVC MAINLINE
13. WATERPROOF ELEC CONNECTOR, PER WIRE SPLICING DETAIL
14. 6" - 8" OF PEA GRAVEL IN VALVE BOXES
15. 3/4" SCH 40 PVC SLEEVE

1 FLOW SENSOR / MASTER VALVE ASSEMBLY

SCALE: NONE

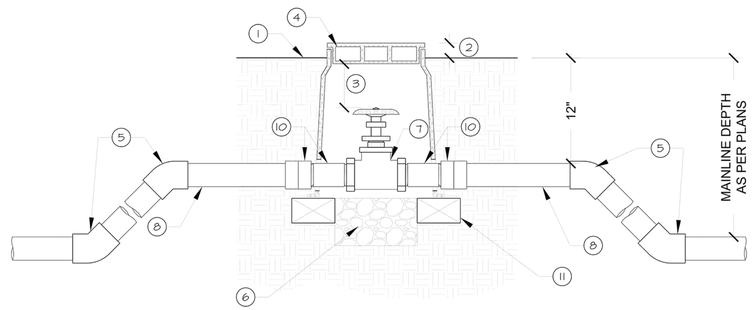

NOTES:

1. WHEN THE MAIN LINE IS TERMINATED AT THE VALVE, EXTEND MAIN LINE 48" BEYOND VALVE BOX AND CAP.

1. FINISH GRADE
2. SET TOP OF BOX ABOVE FINISH GRADE: 1/2" IN SEED, 1-1/2" IN SOD, 2-1/2" IN PLANTER.
3. ALLOW 3" BETWEEN TOP OF THE INTERIOR VALVE BOX COVER AND TOP OF VALVE HANDLE.
4. GREEN PLASTIC VALVE BOX WITH BOLT DOWN LOC-KIT; CARSON MODEL 910.
5. 45° FITTING
6. SAND; 3" MINIMUM DEPTH.
7. GATE VALVE (THREADED)
8. MAIN LINE
9. NOT USED
10. SCH. 80 PVC NIPPLE W/ FEMALE ST COUPLER
11. THREE (3) COMMON BRICKS FOR SUPPORT. SPACE EQUIDISTANT FROM EACH OTHER.

2 ISOLATION VALVE (3" & SMALLER)

SCALE: NONE

NO.	REVISION	BY	DATE
1	35% CD	MSG	02-20-15
2	65% CD	MSG	05-06-15
3	95% CD	MSG	09-18-15
4	100% CD	MSG	01-05-17

DESIGNED MSG
DRAWN AND
CHECKED MSG
APPROVED
DATE

PROJECT NAME
FREITAS PKWY & LAS GALLINAS INTERSECTION IMP PROJECT

DRAWING NAME
IRRIGATION DETAILS

SAN RAFAEL COUNTY OF MARIN CALIFORNIA

LICENSED LANDSCAPE ARCHITECT
MATTHEW S. GABER
No. 3740
Signature
6/08/2016
Renewal Date
12/16/2015
Date
STATE OF CALIFORNIA

CSW | ST2
CSW/Stuber-Stroeh Engineering Group, Inc.
45 Leveroni Court
Novato, CA 94949
tel: 415.883.9850
fax: 415.883.9835
Civil & Structural Engineers
Surveying & Mapping
Environmental Planning
Land Planning
Construction Management

MIG
TEL 510.845.7549
FAX 510.845.8570
www.migcom.com
800 HEARST AVENUE
BERKELEY, CA 94710

CITY OF SAN RAFAEL
DEPARTMENT OF PUBLIC WORKS

SCALE:
DATE: 05-06-15
CITY PROJECT NO.: 11171
SHEET NO.: L2.5
DRAWING: 32 OF 36

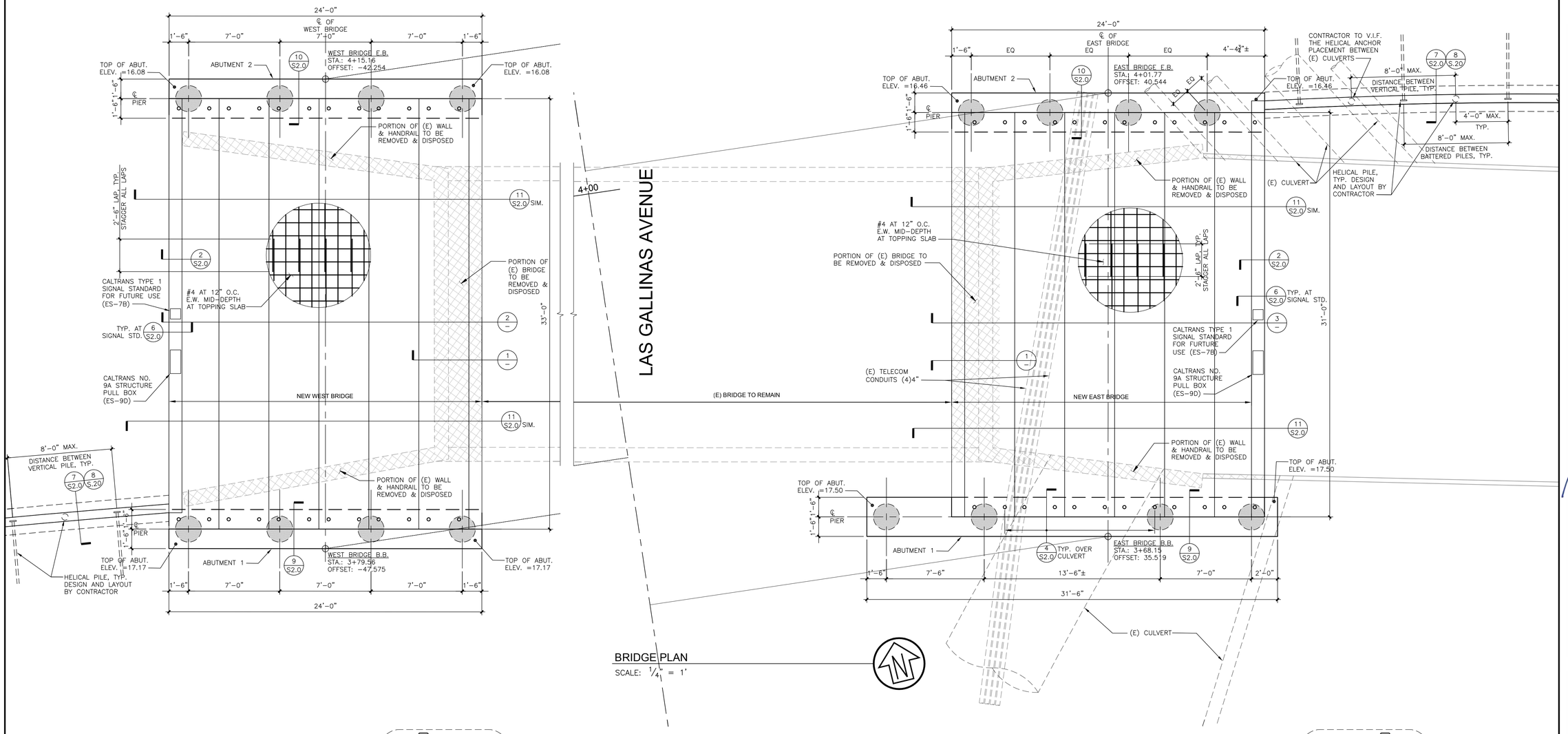

BRIDGE PLAN
SCALE: 1/4" = 1'

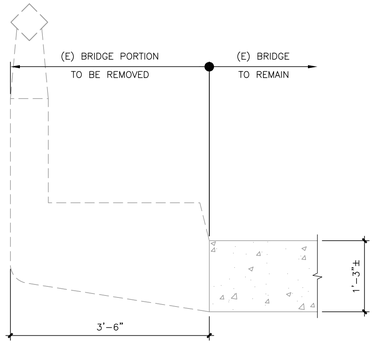

1 TYPICAL (E) BRIDGE DEMOLITION DETAIL
SCALE: 3/4" = 1'-0"

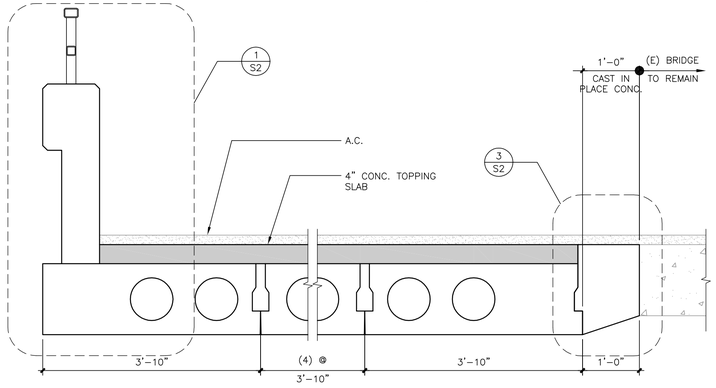

2 WEST BRIDGE SECTION
SCALE: 3/4" = 1'-0"

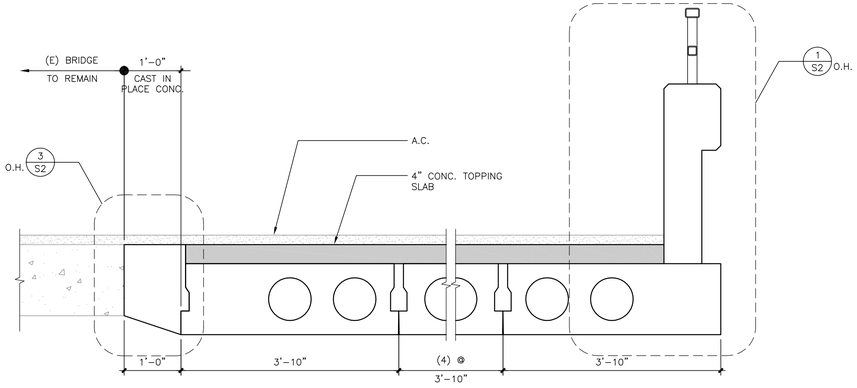

3 EAST BRIDGE SECTION
SCALE: 3/4" = 1'-0"

NO.	REVISION	BY	DATE
1	35% CD	RJS	02-20-15
2	65% CD	RJS	05-06-15
3	95% CD	RJS	09-28-15
4	100% CD	RJS	01-05-17

		DATE
DESIGNED	RJS	
DRAWN	SAS	
CHECKED	RJS	
APPROVED		

PROJECT NAME
FREITAS PKWY & LAS GALLINAS INTERSECTION IMP PROJECT
DRAWING NAME
SAN RAFAEL COUNTY OF MARIN CALIFORNIA

REGISTERED PROFESSIONAL ENGINEER
TODD G. CONDIT
No. 56960
CIVIL
STATE OF CALIFORNIA

CSW ST2
CSW/Stuber-Stroeh Engineering Group, Inc.
45 Leveroni Court
Novato, CA 94949
tel: 415.883.9850
fax: 415.883.9835
Civil & Structural Engineers
Surveying & Mapping
Electrical & Mechanical
Construction Management

CITY OF SAN RAFAEL
DEPARTMENT OF PUBLIC WORKS

SCALE: as shown
DATE: 2-16-16
CITY PROJECT NO.: 11171
SHEET NO.: S1.0
DRAWING: 33 OF 36

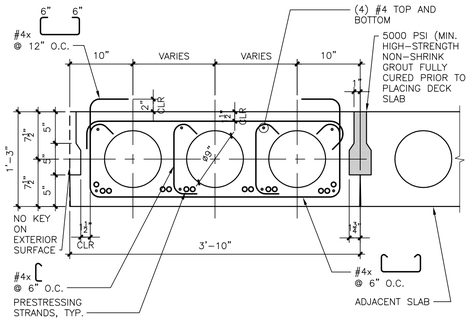

1 TYPICAL PRECAST PRESTRESSED SLAB SECTION
SCALE: 1" = 1'-0"

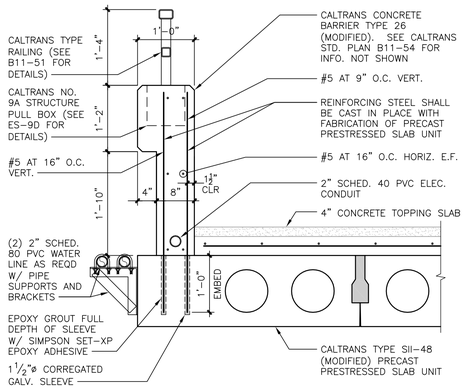

2 CONCRETE BARRIER AT PRESTRESSED SLAB
SCALE: ¾" = 1'-0"

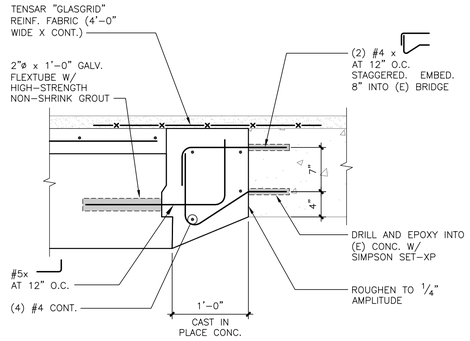

3 BRIDGE TO (E) SLAB CONNECTION DETAIL
SCALE: 1" = 1'-0"

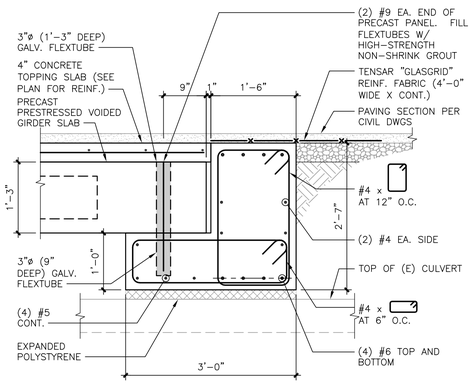

4 ABUTMENT #1 DETAIL OVER EAST BRIDGE CULVERT
SCALE: ¾" = 1'-0"

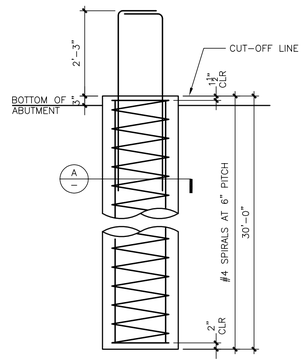

5 ABUTMENT PIER ELEVATION
SCALE: ½" = 1'-0"

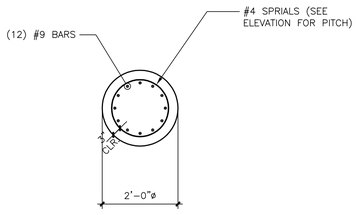

PIER SECTION "A"
SCALE: ½" = 1'-0"

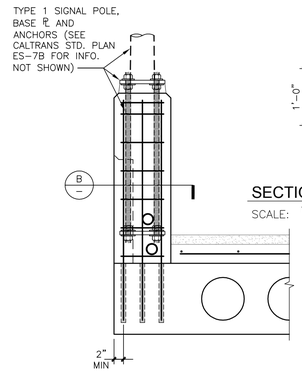

6 CONC. BARRIER AT SIGNAL STD. (CALTRANS TYPE1)
SCALE: ¾" = 1'-0"

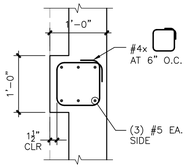

SECTION "B"
SCALE: ½" = 1'-0"

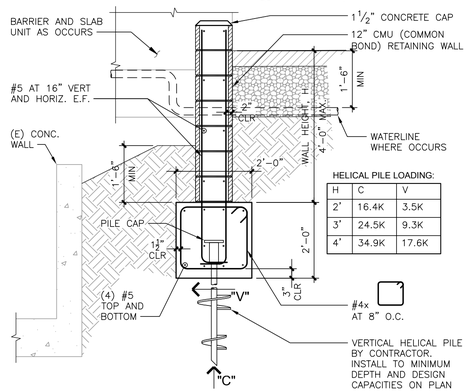

7 ROADSIDE RETAINING WALL-VERTICAL HELICAL PILE
SCALE: ½" = 1'-0"

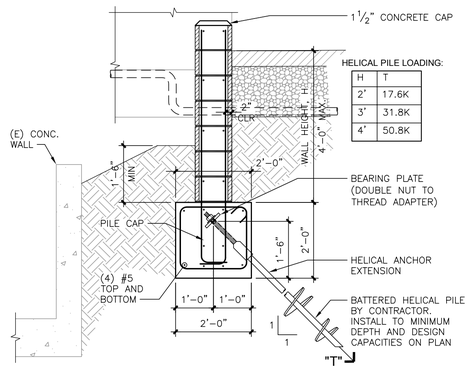

8 ROADSIDE RETAINING WALL-BATTERED HELICAL PILE
SCALE: ½" = 1'-0"

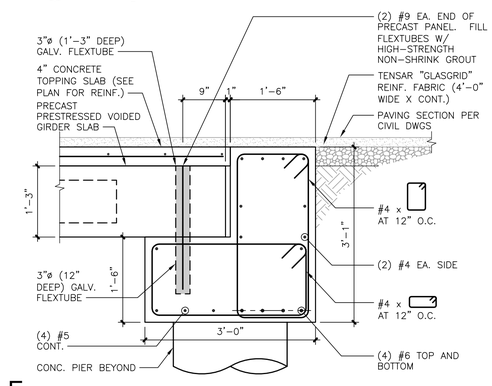

E

9 ABUTMENT #2 DETAIL AT EAST AND WEST BRIDGE
SCALE: ¾" = 1'-0"

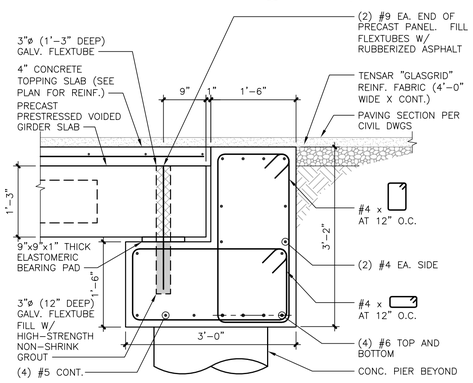

10 ABUTMENT #1 DETAIL AT EAST AND WEST BRIDGE
SCALE: ¾" = 1'-0"

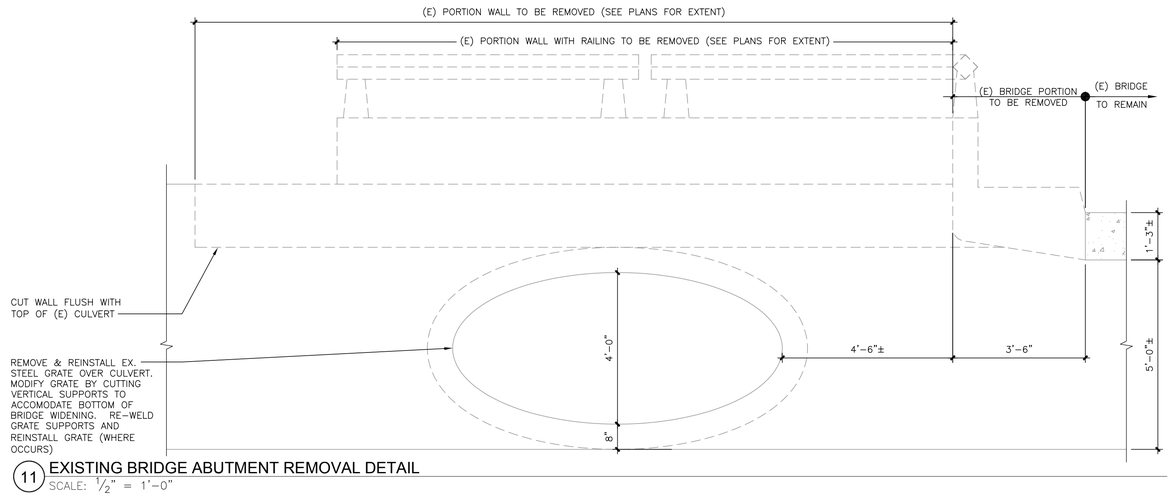

11 EXISTING BRIDGE ABUTMENT REMOVAL DETAIL
SCALE: ½" = 1'-0"

NO.	REVISION	BY	DATE
1	35% CD	RJS	02-20-15
2	65% CD	RJS	05-06-15
3	95% CD	RJS	09-28-15
4	100% CD	RJS	01-05-17

		DATE
DESIGNED	RJS	
DRAWN	SAS	
CHECKED	RJS	
APPROVED		

PROJECT NAME
FREITAS PKWY & LAS GALLINAS INTERSECTION IMP PROJECT
DRAWING NAME
SAN RAFAEL COUNTY OF MARIN CALIFORNIA

REGISTERED PROFESSIONAL ENGINEER
ROD G. CONNOLLY
No. 56960
CIVIL
STATE OF CALIFORNIA

CSW ST2
CSW/Stuber-Stroeh Engineering Group, Inc.
45 Leveroni Court
Novato, CA 94949
tel: 415.883.9850
fax: 415.883.9855
Civil & Structural Engineers
Surveying & Mapping
Electrical Engineering
Construction Management

CITY OF SAN RAFAEL
DEPARTMENT OF PUBLIC WORKS

SCALE: as shown
DATE: 2-16-16
CITY PROJECT NO.: 11171
SHEET NO.: S2.0
DRAWING: 34 OF 36

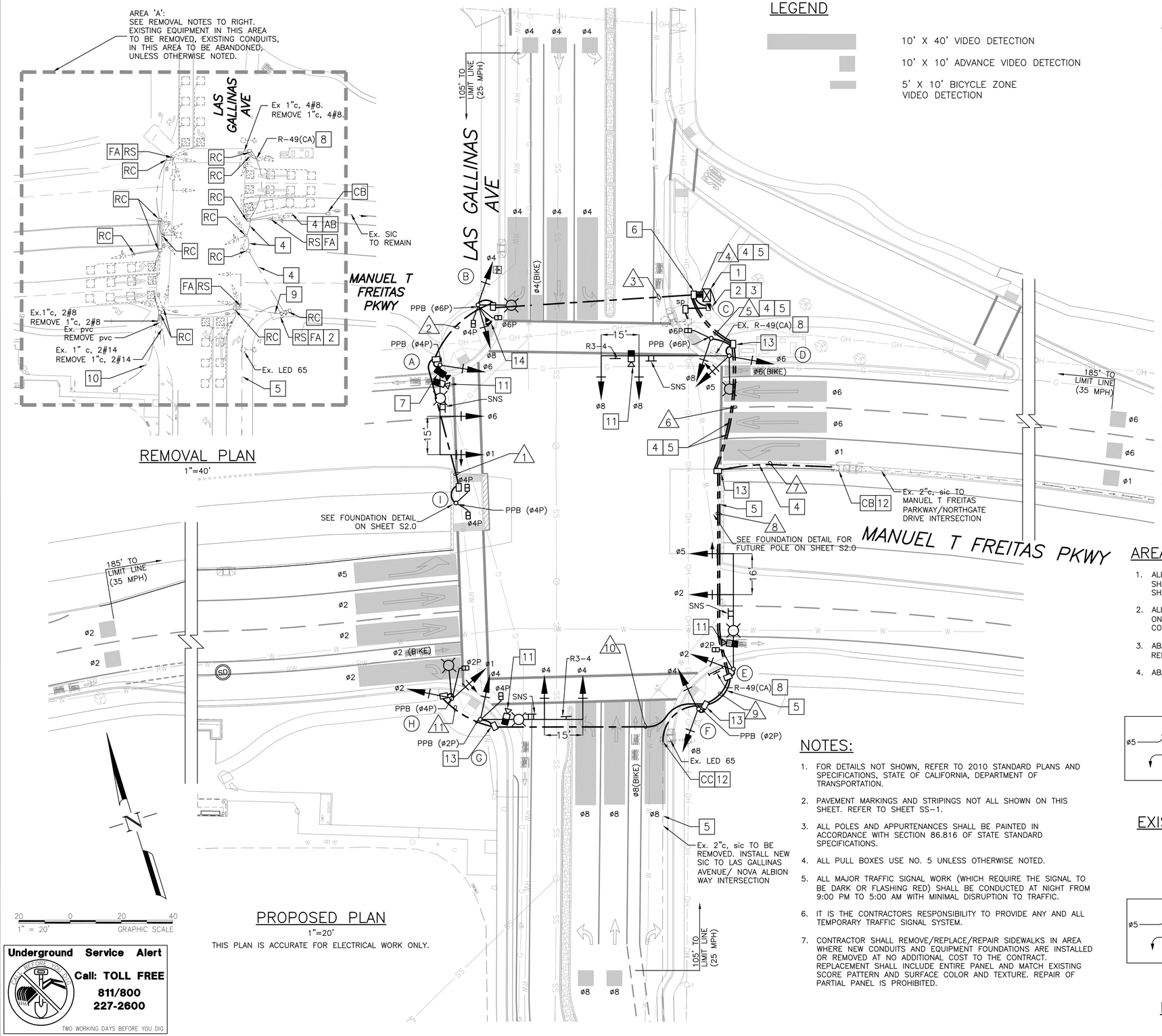

REMOVAL PLAN
1"=40'

PROPOSED PLAN
1"=20'

THIS PLAN IS ACCURATE FOR ELECTRICAL WORK ONLY.

20 0 20 40
1" = 20' GRAPHIC SCALE

Underground Service Alert
Call: TOLL FREE
811/800
227-2600
TWO WORKING DAYS BEFORE YOU DIG

LEGEND

10' X 40' VIDEO DETECTION

10' X 10' ADVANCE VIDEO DETECTION

5' X 10' BICYCLE ZONE
VIDEO DETECTION

PROJECT NOTES (THIS SHEET ONLY):

1. INSTALL CITY FURNISHED COMPLETE AND FULLY FUNCTIONAL COBALT CONTROLLER AND TYPE OL CABINET (WITH BATTERY BACKUP). INSTALL MODIFIED 332 FOUNDATION, AND INSTALL EMTRAC EMERGENCY VEHICLE PREEMPTION. CONTROLLER AND SOFTWARE SHALL BE THE LATEST ECONOLITE SOFTWARE. INCLUDE VIDEO DETECTION SYSTEM ECONOLITE AUTOSCOPE, AND ALL OTHER NECESSARY EQUIPMENT FOR INTENDED SERVICE AND OPERATION. SEE DETAIL 'A', DETAIL 'B', AND DETAIL 'C' ON TS-2.
2. CONTRACTOR SHALL COORDINATE WITH PG&E TO DISCONNECT EXISTING SYSTEM, ESTABLISH NEW SERVICE POINT AND INSTALL NEW METER IN NEW TYPE III-AF SERVICE ENCLOSURE. DISCONNECT AND RECONNECT SHALL HAVE MINIMAL DISRUPTION TO TRAFFIC AND OCCUR AT NON-PEAK HOURS.
3. INSTALL NEW III-AF ENCLOSURE WITH PEU. LIGHTS SHALL BE UNMETERED AND SIGNAL SHALL BE METERED.
4. DISCONNECT EXISTING INTERCONNECT CABLE INSIDE EXISTING CONTROLLER CABINET. REMOVE CABLE FROM EXISTING CONDUITS AND REINSTALL IN 2" CONDUIT (ONLY TO BE SHARED WITH OTHER SIC) ALONG NEW CONDUIT RUNS 4, 5, 6, AND 7. RECONNECT INSIDE NEW CONTROLLER CABINET.
5. DISCONNECT EXISTING INTERCONNECT CABLE INSIDE EXISTING CONTROLLER CABINET. REMOVE CABLE FROM EXISTING CONDUITS AND INSTALL NEW SIC IN 2" CONDUIT (ONLY TO BE SHARED WITH OTHER SIC) ALONG NEW CONDUIT RUNS 4, 5, 6, 7, AND 8. CONNECT INSIDE NEW CONTROLLER CABINET.
6. FURNISH AND INSTALL NO. 6 PULL BOX.
7. INSTALL CCTV SECURITY CAMERA ON HIGHEST POINT OF POLE SHAFT (NO EXTENSIONS).
8. EXISTING PEDESTRIAN BARRICADE AND SIGN R-49(CA) SHALL BE REMOVED AND REINSTALLED.
9. REMOVE BOLLARD ONCE METER RELOCATED AND REVEGETATE.
10. POWER TO IRRIGATION CONTROLLER, SEE LANDSCAPE PLANS FOR IMPROVEMENT DETAIL.
11. INSTALL ECONOLITE ENCORE VIDEO DETECTION CAMERA.
12. PULL EXISTING SIC BACK TO PULLBOX. INSTALL NEW CONDUIT PER CONDUCTOR SCHEDULE. IF EXISTING SIC CONFLICTS WITH PROPOSED DRAINAGE INLET OR OTHER CIVIL IMPROVEMENTS, REPULL SIC FROM NEXT UPSTREAM PULLBOX.
13. COIL UNUSED CONDUCTORS FOR FUTURE PEDESTRIAN AND/OR VEHICLE PHASES IN PULLBOX.
14. CONTRACTOR SHALL FURNISH AND INSTALL INTUICOM RADIO ON THE HIGHEST POINT OF THE HIGHEST POLE, CLEAR OF INTERFERENCE FOR COMMUNICATION WITH ANTENNA LOCATED ON ROBERT DOLLAR HILL. CONTRACTOR SHALL PERFORM COMMUNICATIONS TEST AND VERIFY LOCATION TO PROVIDE FULLY FUNCTIONAL COMMUNICATION SYSTEM TO BE APPROVED BY CITY TRAFFIC ENGINEER. INSTALL COAX FROM RADIO TO CONTROLLER IN PROPOSED CONDUIT (TO BE DETERMINED BY THE CONTRACTOR).

NOTES:

1. FOR DETAILS NOT SHOWN, REFER TO 2010 STANDARD PLANS AND SPECIFICATIONS, STATE OF CALIFORNIA, DEPARTMENT OF TRANSPORTATION.
2. PAVEMENT MARKINGS AND STRIPINGS NOT ALL SHOWN ON THIS SHEET. REFER TO SHEET SS-1.
3. ALL POLES AND APPURTENANCES SHALL BE PAINTED IN ACCORDANCE WITH SECTION 86.816 OF STATE STANDARD SPECIFICATIONS.
4. ALL PULL BOXES USE NO. 5 UNLESS OTHERWISE NOTED.
5. ALL MAJOR TRAFFIC SIGNAL WORK (WHICH REQUIRE THE SIGNAL TO BE DARK OR FLASHING RED) SHALL BE CONDUCTED AT NIGHT FROM 9:00 PM TO 5:00 AM WITH MINIMAL DISRUPTION TO TRAFFIC.
6. IT IS THE CONTRACTORS RESPONSIBILITY TO PROVIDE ANY AND ALL TEMPORARY TRAFFIC SIGNAL SYSTEM.
7. CONTRACTOR SHALL REMOVE/REPLACE/REPAIR SIDEWALKS IN AREA WHERE NEW CONDUITS AND EQUIPMENT FOUNDATIONS ARE INSTALLED OR REMOVED AT NO ADDITIONAL COST TO THE CONTRACT. REPLACEMENT SHALL INCLUDE ENTIRE PANEL AND MATCH EXISTING SCORE PATTERN AND SURFACE COLOR AND TEXTURE. REPAIR OF PARTIAL PANEL IS PROHIBITED.

AREA 'A' – REMOVAL NOTES (THIS PLAN ONLY):

1. ALL EXISTING UNUSED CABLES AND CONDUCTORS SHALL BE REMOVED. FOUNDATIONS SHALL BE REMOVED TO 12" BELOW GRADE. HANDHOLES AND EXISTING PULL BOXES SHALL BE REMOVED AND DISPOSED OF.
2. ALL SALVAGED EQUIPMENT SHALL BE DELIVERED TO THE CITY OF SAN RAFAEL ON-CALL MAINTENANCE CONTRACTOR'S YARD IN COTATI, CA. THE CONTRACTOR SHALL COORDINATE THE DELIVERY OF SALVAGED EQUIPMENT WITH THE ENGINEER.
3. ABANDON ALL EXISTING CONDUIT UNLESS OTHERWISE NOTED. (NOTE: SIC CONDUIT TO REMAIN).
4. ABANDON ALL LOOPS IN PLACE.

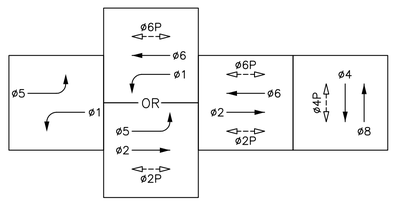

EXISTING AND PROPOSED PHASE DIAGRAM
STEADY DEMAND SEQUENCE

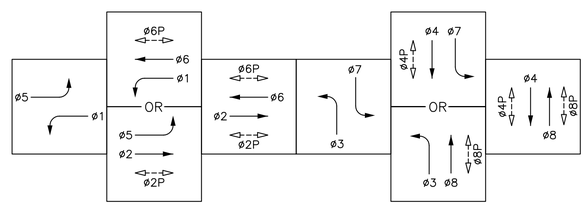

FUTURE PROPOSED PHASE DIAGRAM
STEADY DEMAND SEQUENCE

NO.	REVISION	BY	DATE
1	BID SET	SN	01-05-17

DESIGNED SN
DRAWN DD/JM
CHECKED JB
APPROVED DATE

PROJECT NAME
FREITAS PKWY & LAS GALLINAS INTERSECTION IMP PROJECT
DRAWING NAME
TRAFFIC SIGNAL PLAN
SAN RAFAEL COUNTY OF MARIN CALIFORNIA

REGISTERED PROFESSIONAL ENGINEER JAMES D. BURGESS No. 66581 Exp. 6/30/16 STATE OF CALIFORNIA
12/17/15 DATE

CSW ST2
CSW/Stuber-Stroeh Engineering Group, Inc.
45 Leveroni Court
Novato, CA 94949
tel: 415.883.9652
fax: 415.883.9835
Civil & Structural Engineers
Surveying & Mapping
Electrical Engineering
Construction Management

FEHR PEERS
San Francisco, CA 94104
(415) 348-0300
332 Pine Street
4th Floor

CITY OF SAN RAFAEL
DEPARTMENT OF
PUBLIC WORKS

SCALE:
DATE: 12-17-15
CITY PROJECT NO.: 11171
SHEET NO.: TS-1
DRAWING: 35 OF 36

CONDUCTOR SCHEDULE

AWG OR CABLE	CONDUCTOR DESIGNATION	NUMBER OF CONDUCTORS — RUN NUMBERS 1	2	3	4	5	6	7	8	9	10	11
NO. 14	ø1		3	3	6	3	3		3	3	3	3
	ø2				3	3	3		3	3	3	3
	ø3 (FUTURE USE)			3	6	3						
	ø4			3	6	3	3		3	3	3	
	ø5				3	3	3		3			
	ø6		3	3	6	3						
	ø7 (FUTURE USE)				3	3	3		3	3	3	
	ø8			3	6	3	3		3	3		
	ø2 PED				2	2	2		2	2	2	2
	ø4 PED	2	2	2	4	2	2		2	2	2	
	ø6 PED			2	4	2						
	ø8 PED (FUTURE USE)				2	2	2		2	2		
	ø2 PPB				1	1	1		1	1	1	
	ø4 PPB	1	1	1	2	1	1		1	1	1	1
	ø6 PPB			1	2	1						
	ø8 PPB (FUTURE USE)				1	1	1		1			
	PPB NEUTRAL	1	1	1	2	1	1		1	1	1	1
	SPARES	3	3	3	6	3	3		3	3	3	3
	TOTAL NO. 14	7	13	25	65	40	31		31	27	22	13
NO. 10	SIGNAL NEUTRAL	1	1	1	2	1	1		1	1	1	1
	TOTAL NO. 10	1	1	1	2	1	1		1	1	1	1
NO. 8	LUMINAIRES (240 V)		2	2	4	2	2		2	2	2	2
	TOTAL NO. 8		2	2	4	2	2		2	2	2	2
VIDEO DETECTION COAX CABLE	ø1 + ø6 (WB)		1	1	1							
	ø2 + ø5 (EB)				1	1	1		1			
	ø8 (NB)				1	1						
	ø7 (SB)				1	1	1		1	1	1	
	TOTAL DETECTOR CABLES			1	4	3	2		2	1	1	
OTHER CONDUC–TORS	CCTV SECURITY CAMERA		1	1	1							
	EMTRAC CABLE				1	1						
	INTUICOM RADIO ANTENNA (1)			1	1							
	SIGNAL INTERCONNECT CABLE				2	2	2	1	1	1		
	CONDUIT SIZE	1–2"	1–2"	1–3"	2–3" 1–2"*	2–3" 1–2"*	1–3" 1–2"*	1–2" 1–2"	1–3" 1–2"*	1–3" 1–2"*	1–2"	1–2"
	PERCENT FILL	5%	16%	16%	21%	13%	18%	5%	15%	13%	20%	13%

NOTES:
(1) SAMPLE OF INTUICOM RADIO ANTENNA CONDUCTOR PLACEMENT. CONTRACTOR SHALL DETERMINE CONDUCTOR SCHEDULE ROUTING BASED ON FINAL LOCATION OF ANTENNA. SEE PROJECT NOTE 14 ON TS–1,
* = ONLY SIC SHALL BE INSTALLED IN 2" CONDUIT

POLE AND EQUIPMENT SCHEDULE

	STANDARD TYPE	SIG MA	LUM ARM	VEH SIG MTG MAST	VEH SIG MTG POLE	PED SIGNAL MTG	PPB ø	PPB ARROW	LED LUM WATTAGE	SPECIAL REQUIREMENTS
Ⓐ	24–4–100	35'	12'	MAS MAS	SV–1–T		4	←	49	INSTALL STREET SIGN ON MAST ARM "LAS GALLINAS AVE". INSTALL VIDEO DETECTION CAMERA ON LUMINAIRE ARM FOR ø1 AND ø6. INSTALL CCTV CAMERA ON POLE SHAFT.
Ⓑ	15TS		12'		SV–2–TA	SP–2–T	6	→	49	
Ⓒ	1A				TV–1–T	SP–1–T	6	←		
Ⓓ	29–5–100	50'	15'	MAS MAS	SV–2–T				49	INSTALL STREET SIGN ON MAST ARM "MANUEL T. FREITAS PKWY". INSTALL LUMINAIRE 90 DEGREES COUNTER CLOCKWISE FROM MAST ARM. INSTALL VIDEO DETECTION CAMERA ON MAST ARM FOR ø8. FURNISH AND INSTALL EMTRAC ANTENNA ON TOP OF POLE.
Ⓔ	26–4–100	45'	12'	MAS MAS	SV–1–T	SP–1–T			49	INSTALL STREET SIGN ON MAST ARM "LAS GALLINAS AVE". INSTALL VIDEO DETECTION CAMERA ON LUMINAIRE ARM FOR ø2 AND ø5.
Ⓕ	1A				TV–2–T		2	→		
Ⓖ	27–4–100	40'	12'	MAS MAS	SV–1–T	SP–1–T	2	←	49	INSTALL STREET SIGN ON MAST ARM "MANUEL T. FREITAS PKWY". INSTALL VIDEO DETECTION CAMERA ON LUMINAIRE ARM FOR ø4.
Ⓗ	15TS		12'		SV–2–T	SP–1–T	4	→	49	
Ⓘ	1A (7')					TP–2–T	4	←→		

NOTES:

1. ALL EQUIPMENT AND CONDUCTORS ARE NEW, UNLESS OTHERWISE NOTED.
2. ALL SIGNAL INTERCONNECT CABLES (SIC) SHALL BE INSTALLED IN A 2" CONDUIT, NOT TO SHARE WITH ANY OTHER CONDUCTOR (SHARED WITH OTHER SIC OK). CONDUIT WITH SIC SHALL BE IN SAME TRENCH AS PARALLEL CONDUIT RUN. SEE PROJECT NOTE 4 AND 5 ON TS–1.
3. CONTRACTOR SHALL FURNISH AND INSTALL ACCESSIBLE PEDESTRIAN SIGNALS (APS) AT THE INTERSECTION OF LAS GALLINAS AVENUE AND MANUEL T. FREITAS PARKWAY. APS SHALL CONFORM TO THE 2010 REVISED CALTRANS STANDARD PLAN ES–5C. THE CONTRACTOR SHALL FURNISH AND INSTALL ADVISOR GUIDE ACCESSIBLE PEDESTRIAN STATIONS MANUFACTURED BY CAMPBELL COMPANY, OR APPROVED EQUAL. THE HOUSING COLOR SHALL BE BLACK. THE SIZE OF THE APS UNIT SHALL BE 5"X7–3/4"
4. THE CONTRACTOR SHALL FURNISH AND INSTALL AUDIBLE CHIRP–CHIRP WITH COUNTDOWN AND HAND, PEDESTRIAN SIGNALS. THE CONTRACTOR SHALL SUBMIT LITERATURE FOR REVIEW AND APPROVAL.

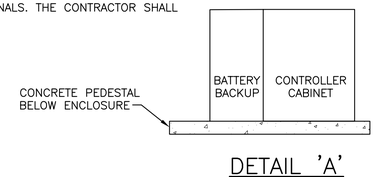

DETAIL 'A'
CONTROLLER CABINET/ BATTERY BACKUP LAYOUT
NOT TO SCALE

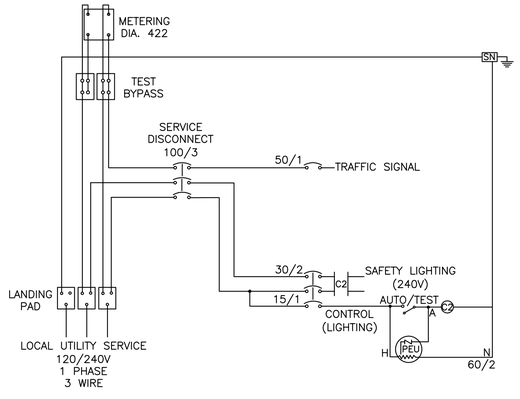

DETAIL 'C'
TYPE III–AF SERVICE EQUIPMENT ENCLOSURE
120/240 V SERVICE WIRING DIAGRAM (TYPICAL)
NOT TO SCALE

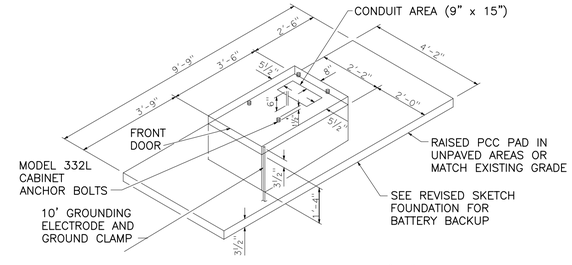

DETAIL 'B'
CONTROLLER CABINET FOUNDATION
NOT TO SCALE

Underground Service Alert
Call: TOLL FREE
811/800
227-2600
TWO WORKING DAYS BEFORE YOU DIG

NO.	REVISION	BY	DATE
1	BID SET	SN	01-05-17

DESIGNED SN | DRAWN DD/JM | CHECKED JB | APPROVED | DATE

PROJECT NAME: FREITAS PKWY & LAS GALLINAS INTERSECTION IMP PROJECT
DRAWING NAME: CONDUCTOR & EQUIPMENT SCHEDULES
SAN RAFAEL | COUNTY OF MARIN | CALIFORNIA

REGISTERED PROFESSIONAL ENGINEER JAMES D. BURGESS No. 6658 Exp. 6/30/17 STATE OF CALIFORNIA
12/17/15 DATE

CSW ST2
CSW/Stuber-Stroeh Engineering Group, Inc.
45 Leveroni Court
Novato, CA 94949
tel: 415.883.9650
fax: 415.883.9655
Civil & Structural Engineers
Surveying & Mapping
Electrical Engineering
Construction Management

FEHR PEERS
332 Pine Street
4th Floor
San Francisco, CA 94104
(415) 348-0300

CITY OF SAN RAFAEL
DEPARTMENT OF PUBLIC WORKS

SCALE:
DATE: 12-17-15
CITY PROJECT NO.: 11171
SHEET NO.: TS-2
DRAWING: 36 OF 36