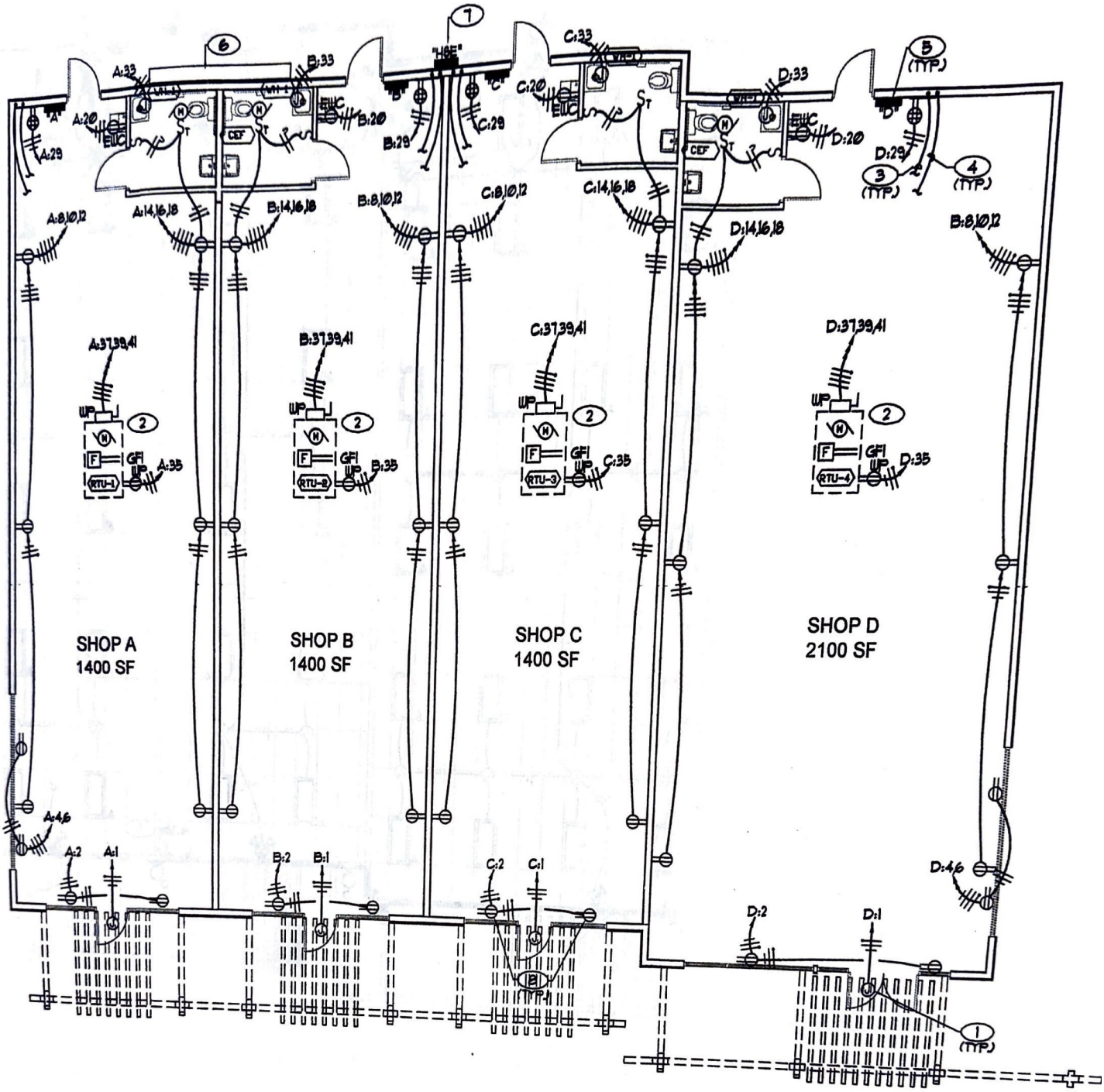

1 POWER PLAN

1/8" = 1'-0"

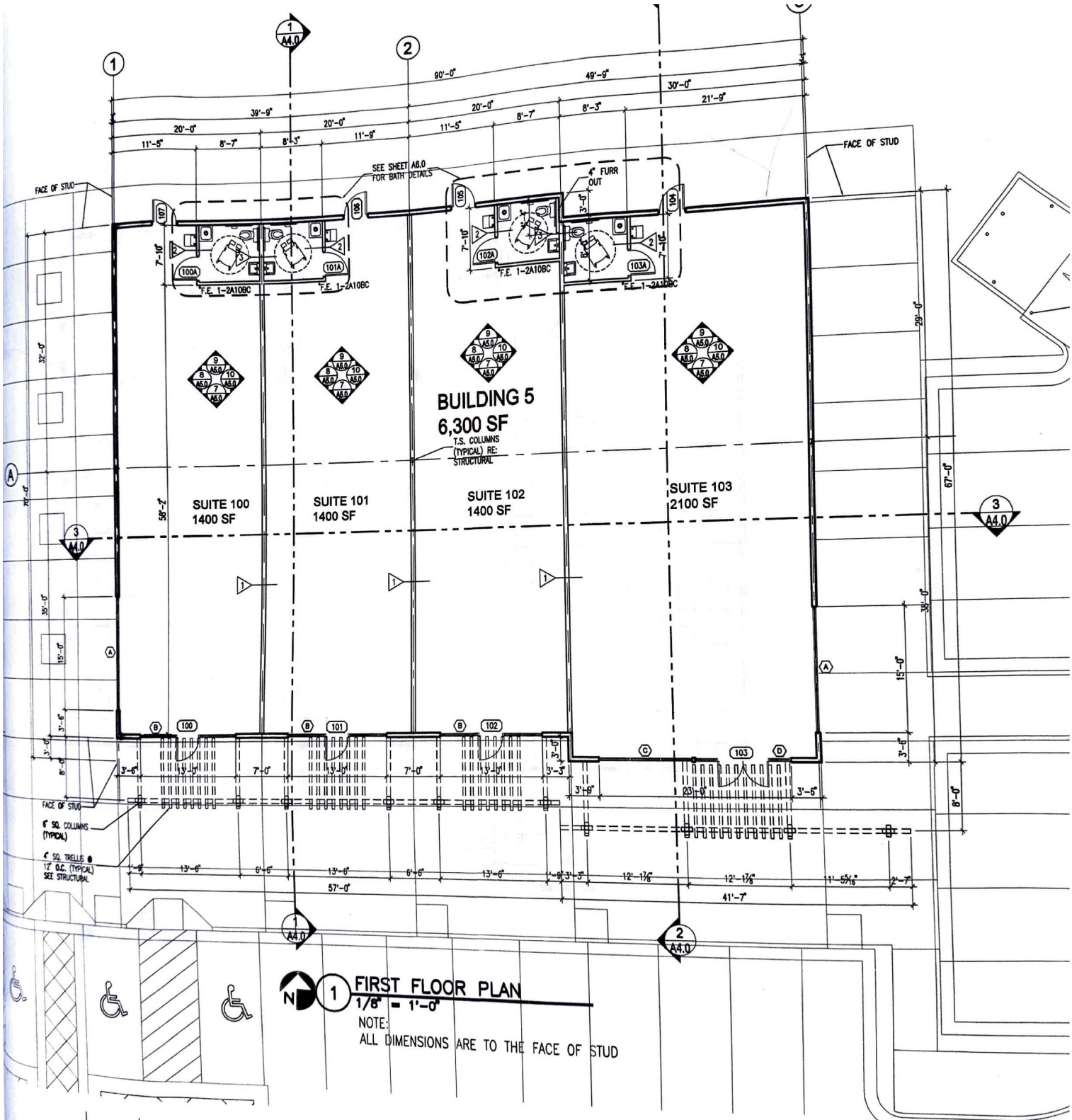

N 1 **FIRST FLOOR PLAN**
1/8" = 1'-0"

NOTE:
ALL DIMENSIONS ARE TO THE FACE OF STUD

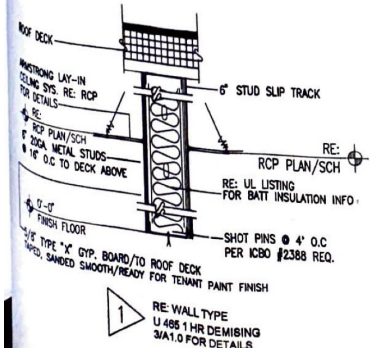

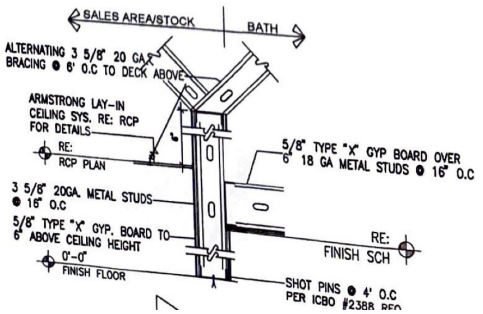

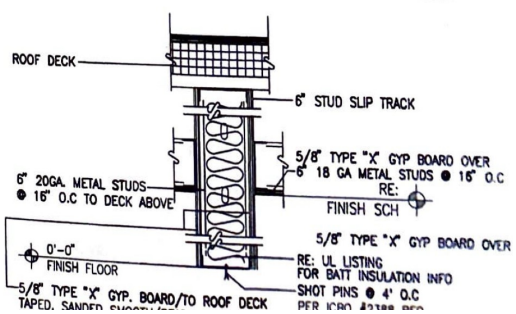

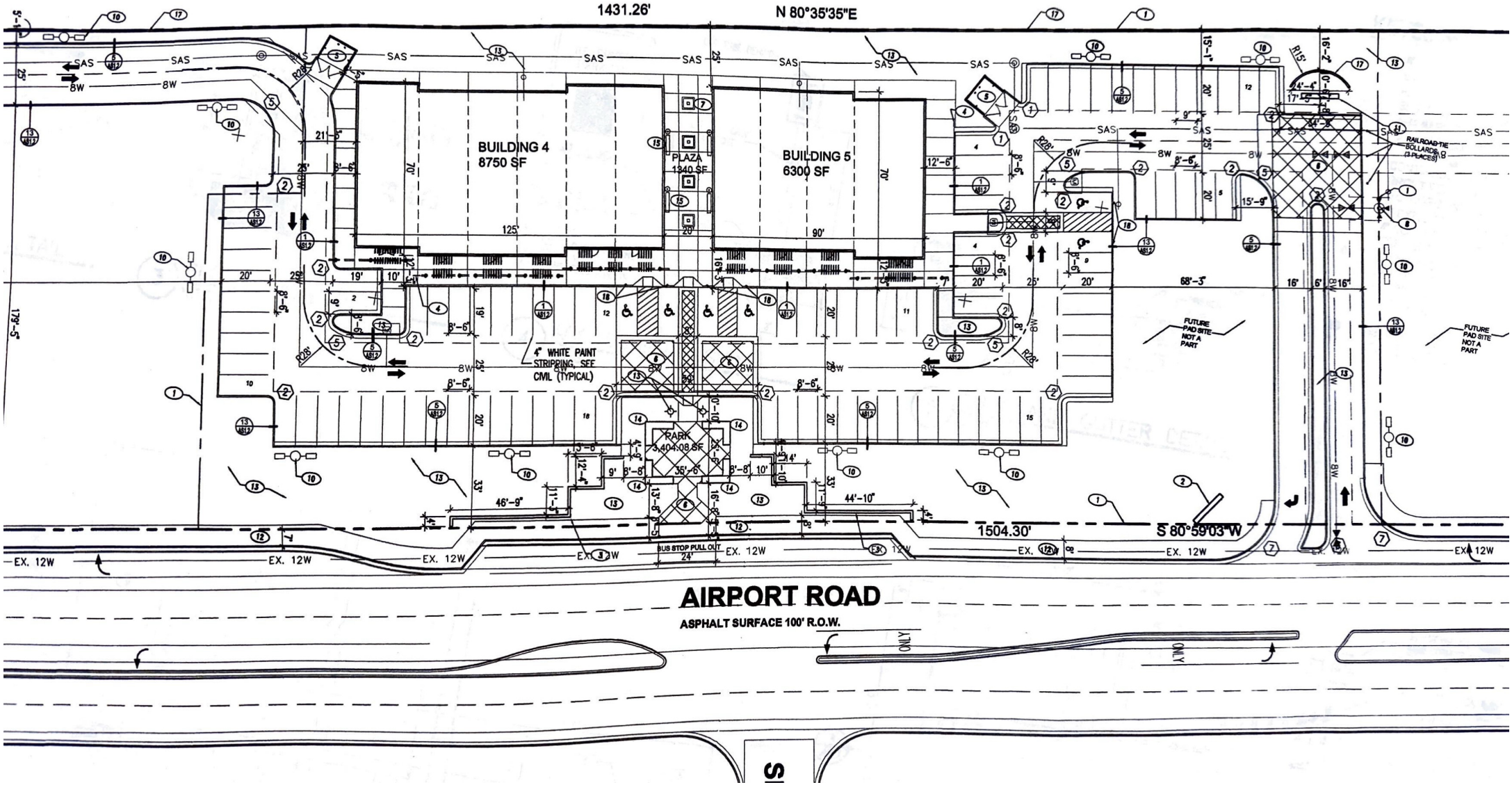
1431.26'
N 80°35'35"E
BUILDING 4
8750 SF
PLAZA
1340 SF
BUILDING 5
6300 SF
4" WHITE PAINT
STRIPPING, SEE
CIVIL (TYPICAL)
PARK
3,404.08 SF
FUTURE
PAD SITE
NOT A
PART
RAILROAD-TIE
BOLLARDS
(3-PLACES)
1504.30'
S 80°59'03"W
BUS STOP PULL OUT
24'
EX. 12W
AIRPORT ROAD
ASPHALT SURFACE 100' R.O.W.
ONLY
SAS
8W

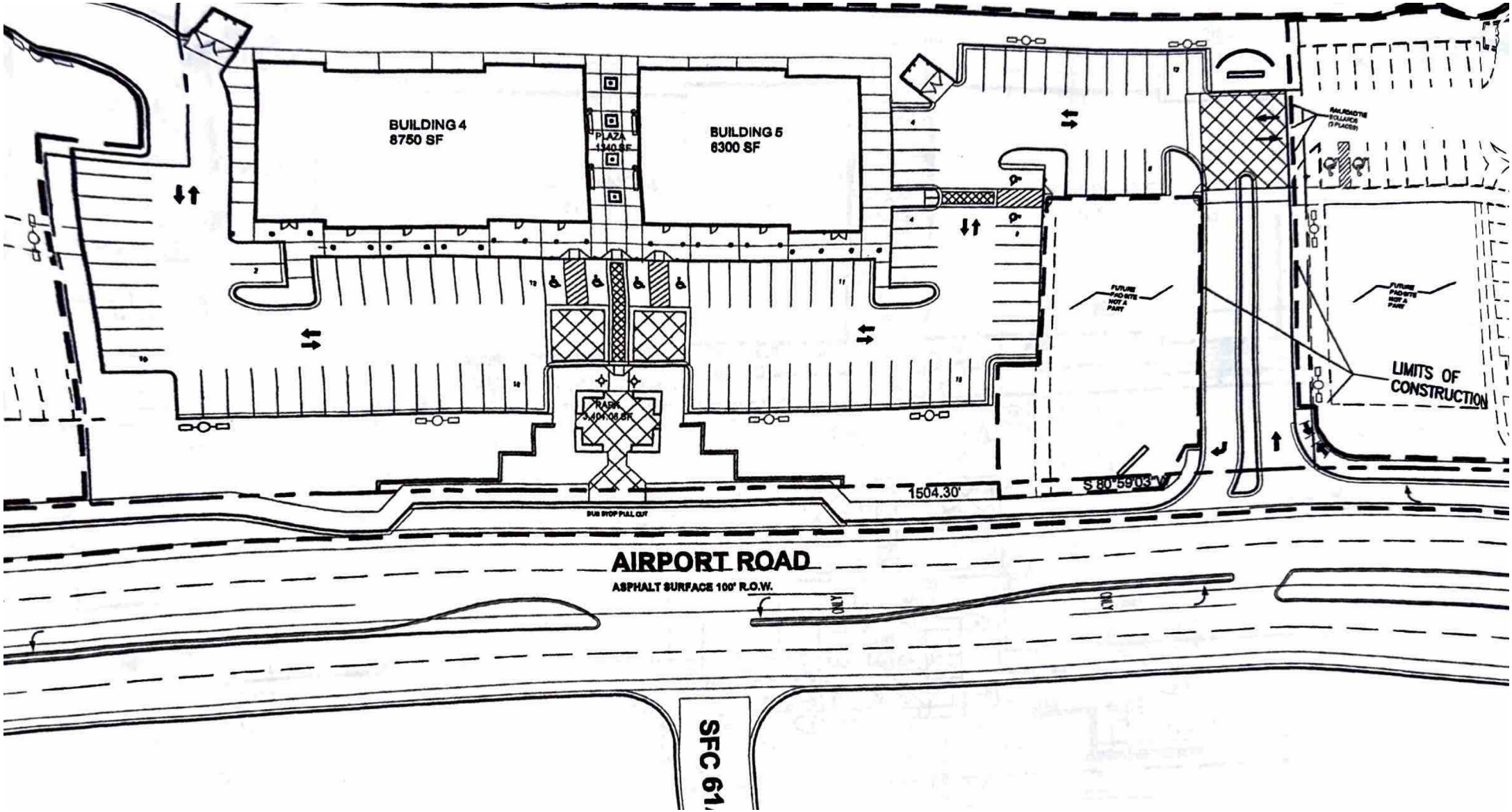
BUILDING 4
8750 SF
PLAZA
1340 SF
BUILDING 5
6300 SF
PARK
3,491.08 SF
FUTURE PAD SITE NOT A PART
FUTURE PAD SITE NOT A PART
LIMITS OF CONSTRUCTION
1504.30'
S 80°59'03"W
BUS STOP PULL OUT
AIRPORT ROAD
ASPHALT SURFACE 100' R.O.W.
ONLY
ONLY
SFC 61