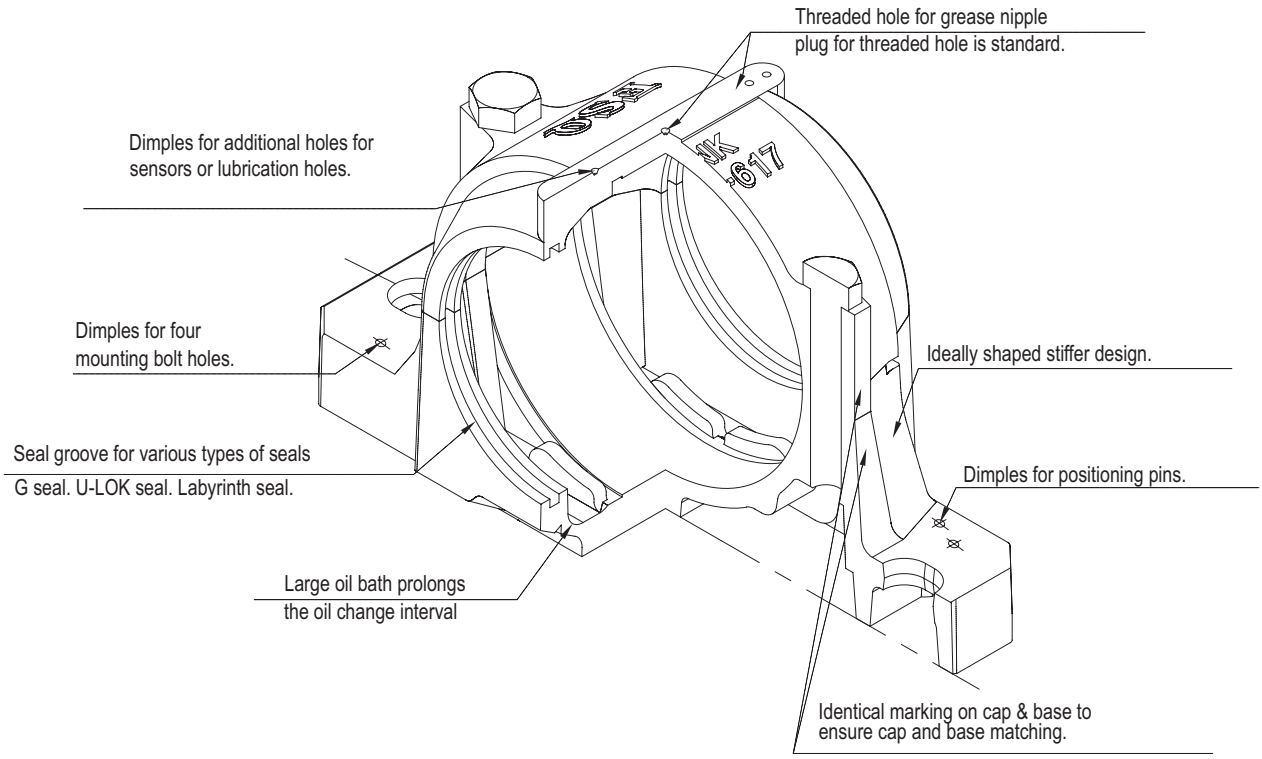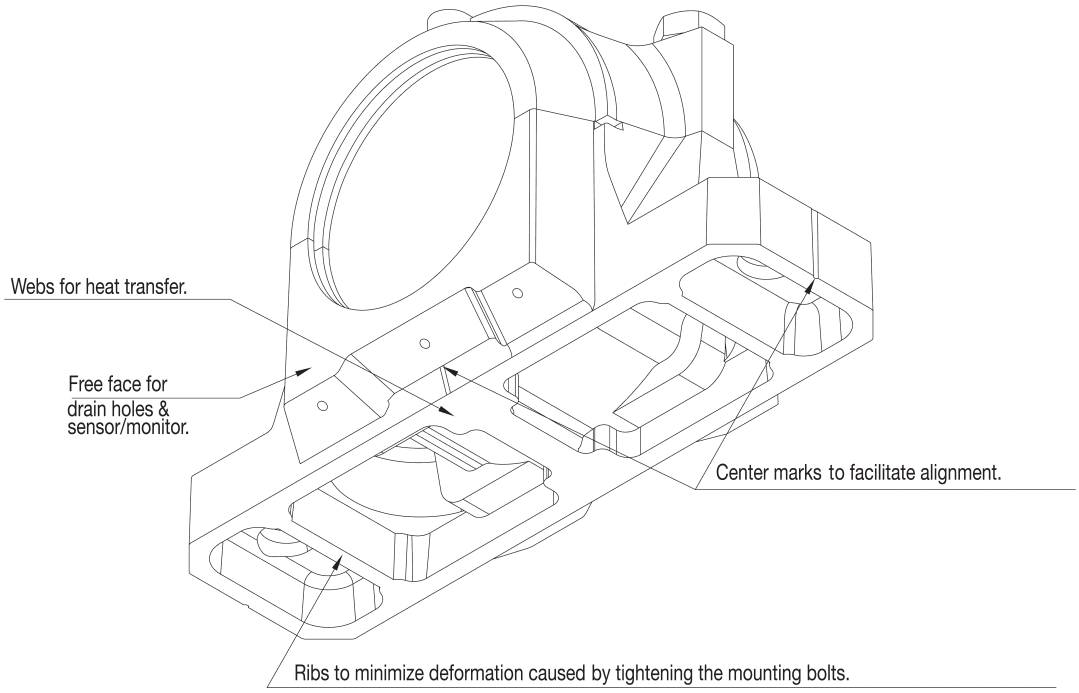Interchangeable with SNA/SNU/SNH/SNN/SNV/SNL