비고	지시없는 용접 수치는	절삭가공 부분의	구분	0.5 ~ 6	6 ~ 30	30 ~ 120	120 ~ 315	315 ~ 1000	1000 ~ 2000
			허용	±0.1	±0.2	±0.3	±0.5	±0.8	±1.2

표면거칠기									
Ra	✓	25/	12.5/	6.3/	3.2/	1.6/	0.8/	0.2/	0.1/
Rmax		100S	50S	25S	12.5S	6.3S	3.2S	0.8S	0.4S
다듬질	~	▽		▽▽		▽▽▽		▽▽▽▽	

NO.	DATE	REVISION & DESCRIPTION	SIGNATURE REVIEWED	SIGNATURE CHECKED

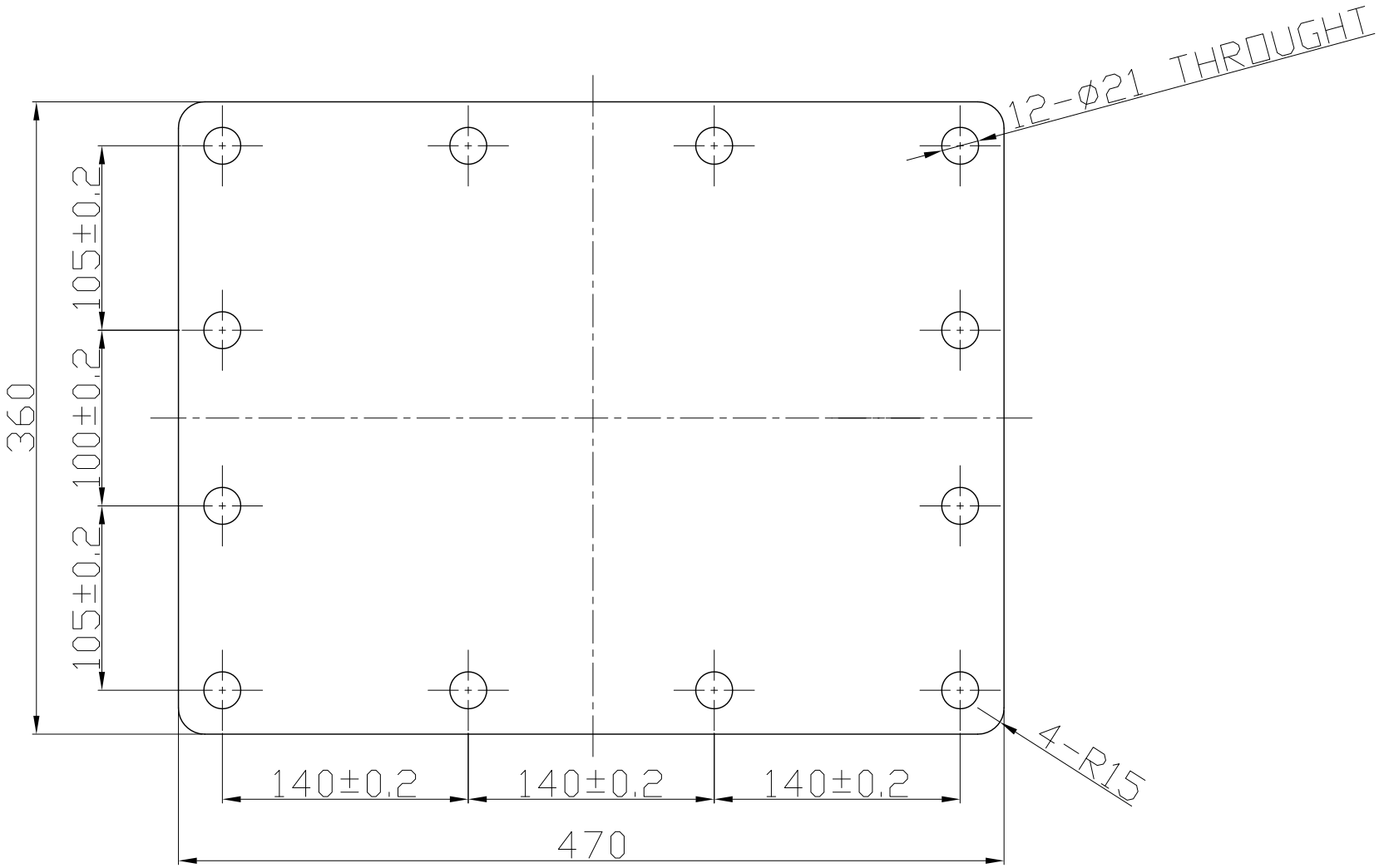

NO.	PART NO.	DESCRIPTION	MATERIAL	Q'TY	WEIGHT(Kg)	REMARK'S
5	HBTBH004-01-005-0	MOUNTING PLATE	SM50A	1		360X470X22t

AV Heavy Industries Co., Ltd.

SCALE	1 : 1	PROJECTION	
SIZE	A0	DIMENSION	mm

TITLE		
MODEL	HATALMAS 004	
NAME	HYDRAULIC BREAKER-BRACKET TOP BOX	

DWG. NO.	HBTBH004-01-005-0	ISSUE

AV HEAVY	DRAWN	CHECKED	REVIEWED	APPROVED	(SUPPLIER)	REF. DWG. NO.
SIGNATURE	이지현					HBTBH004-00-000-0
DATE	2016.01.22					