Ride Height: _____
Date: _____
Track: _____
Weather&Temp: _____
Driver Mood: _____

Tight:	Low Grip
Medium:	Medium Grip
Track:	High Grip
Smooth:	Dusty
Rough:	Blue Groove

B21.2 SET-UP SHEET

	FRONT	REAR
SUSPENSION		
Ride Height		
Downtravel With Tyres		
Swaybar		
Brake Balance	%	%
Camber	Length: mm	Length: mm
	Degree: mm	Degree: mm
Steering Link/ Froint Toe	Length: mm	
	Degree: mm	
SHOCKS		
Oil wt/Brand		
Piston		
Spring		
Length	Preload: mm	Preload: mm
	Total: mm	Total: mm
Rebound		
TYRES		
Tread/Brand		
Compound		
Insert		
Wheel		
Tyre Set Weight		g

	FRONT	CENTER	REAR
DIFFS			
Oil wt/Brand			
Gear ratio (main/pinoin)			

Car Weight	
Motor	
ESC	
Battery	

Best Lapt ime

Runtime

Best result

Qualifying Position

Final Position

FRONT
Part ETO

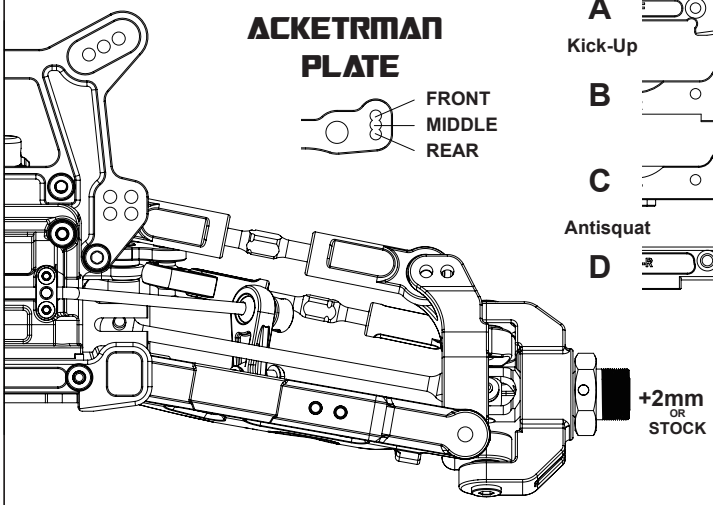

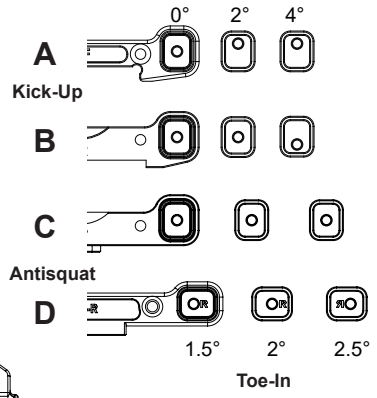

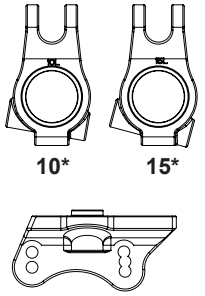

REAR
Part ETO

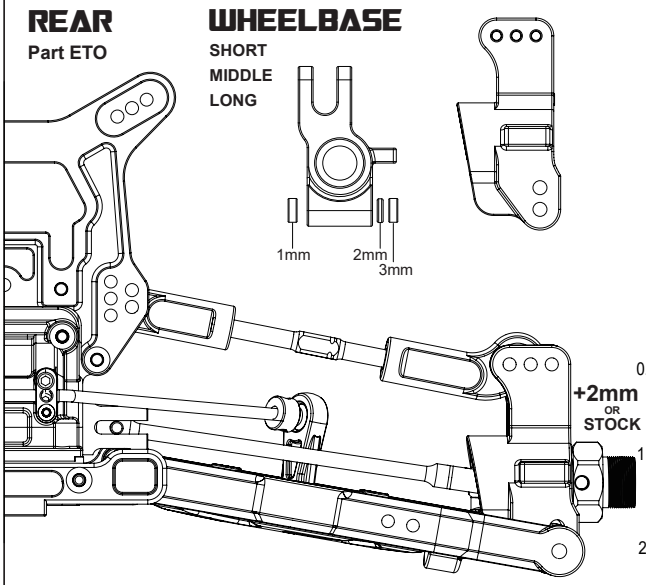

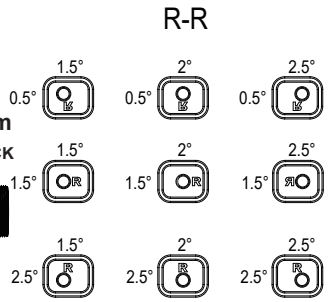
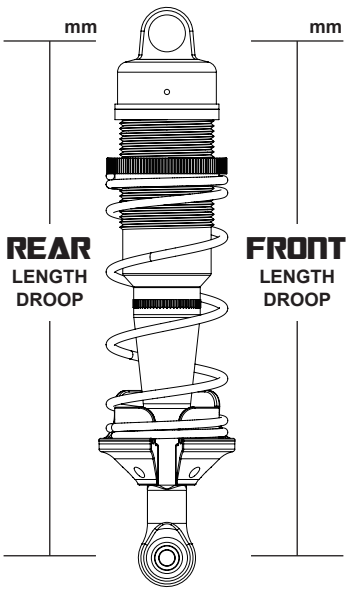
NOTES