SET-UP SHEET

Driver	Andreas Myrberg
Race	Asphalt basic setup
Trackname	
Date	

Track conditions

Surface	✓ Asphalt Outdoor	Asphalt Indoor	Carpet
Layout	Tech	Med	✓ Fast
traction	✓ Low	✓ Med	High

Transmission

Gear diff oil/cst:	5000
Gear diff oil/grams:	1.0 gram
Spurgear	
Pinion	
Final drive ratio (1.9)	

Belt width

Front	3 mm
Middle	3 mm
Rear	3 mm

Front	Shocks	Rear
16,7	Spring	33,1
500	Oil	1000
std	Piston	std
std	Housing	std

HEAVE SHOCK

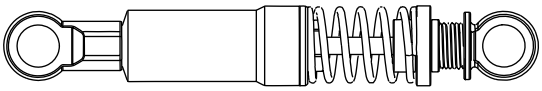

Spring	Hard	Preload	4 mm
Oil	400	Piston	std

Front		Rear
1,1	Stabilizer Thickness	1,3
49	Weight balance %	51

Front		Rear
	Tires	
	Additive	
	Additive time	
	Treated area	

Motor	Ruddog Racing RP542	Timing	
ESC	Ruddog Racing RXS	Batteries	Ruddog Racing 6300
Body		Wing	

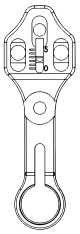

Ackermann setting

2 mm

Steering lock inside tire

25 degree

Servo arm length

18 mm

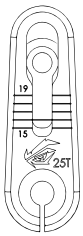

FRONT

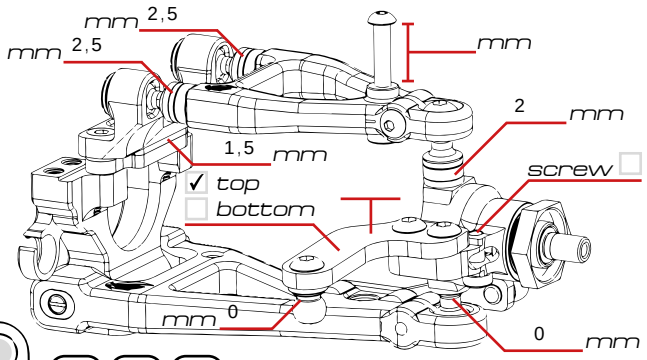

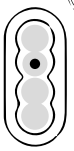

wide/middle/narrow

Ride height	5,4	Toe out	1
Droop	5,2	Camber	

REAR

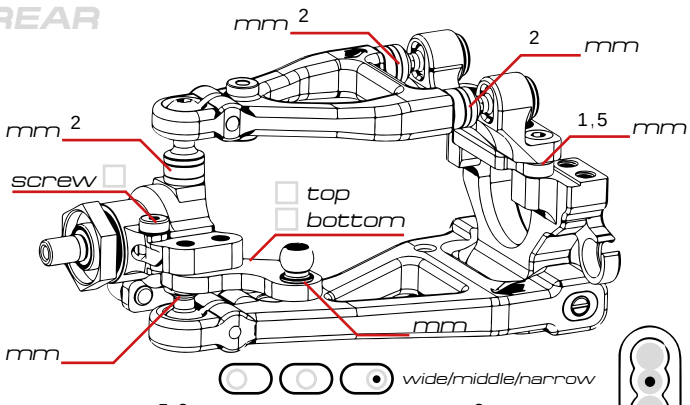

wide/middle/narrow

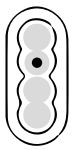

Ride height	5,8	Toe in	2
Droop	4	Camber	

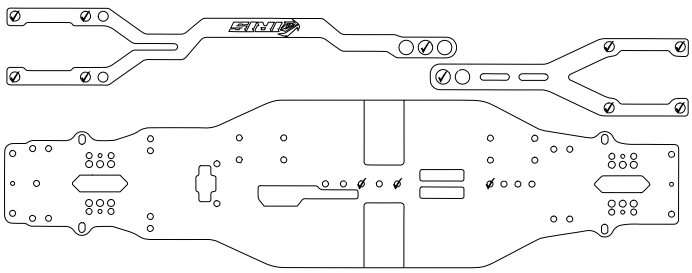

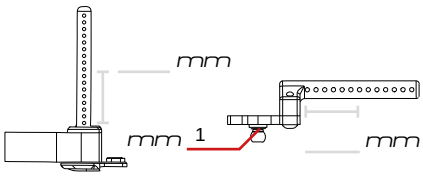

Chassis

- ● Carbon
- ○ Alu Liniar Flex
- ○ Alu Solid