RMX 2.0 RTR

1/10 SCALE RC RWD HIGH PERFORMANCE DRIFT CAR

EXPLODED VIEW

MST MAX SPEED TECHNOLOGY

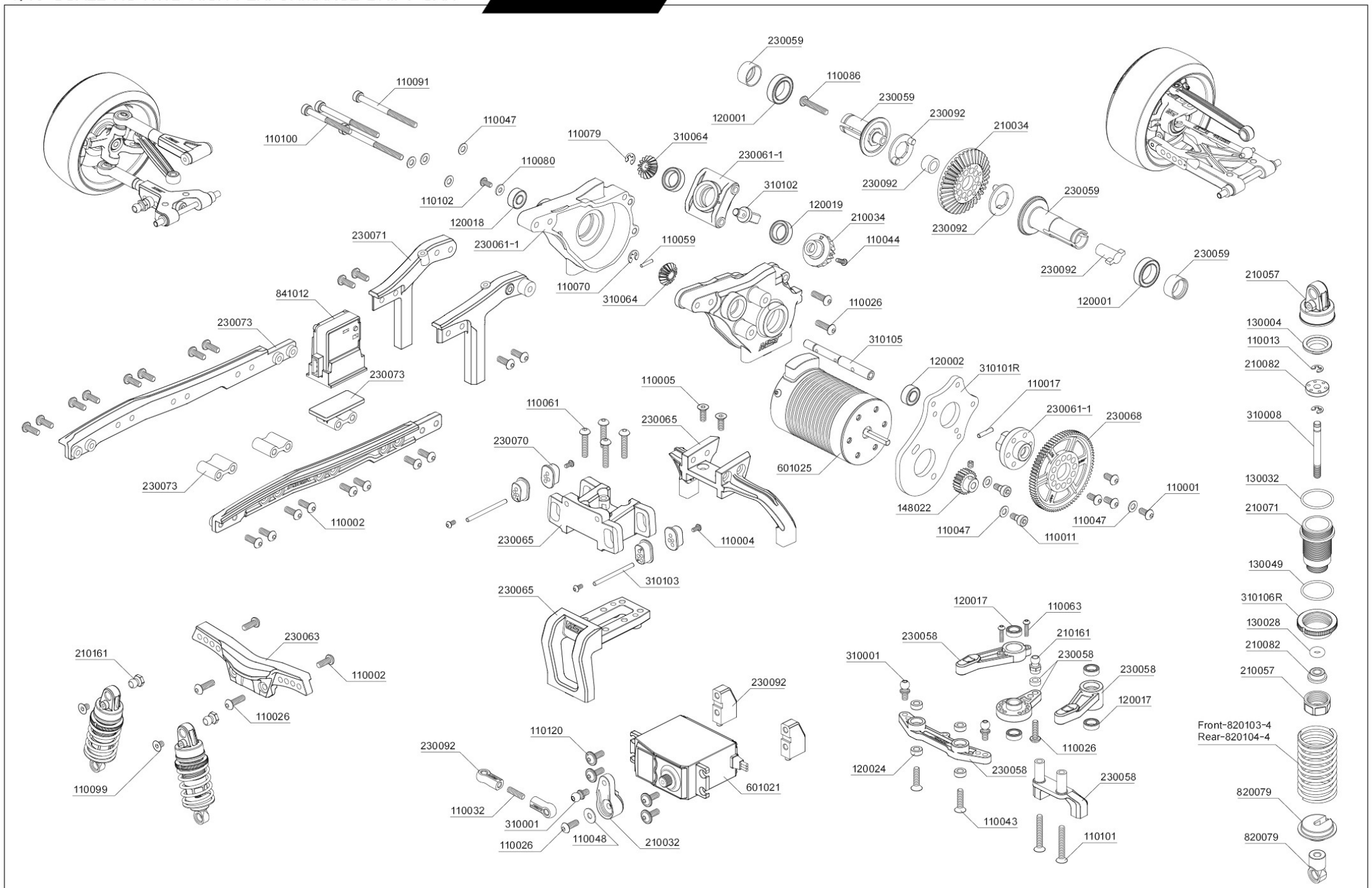

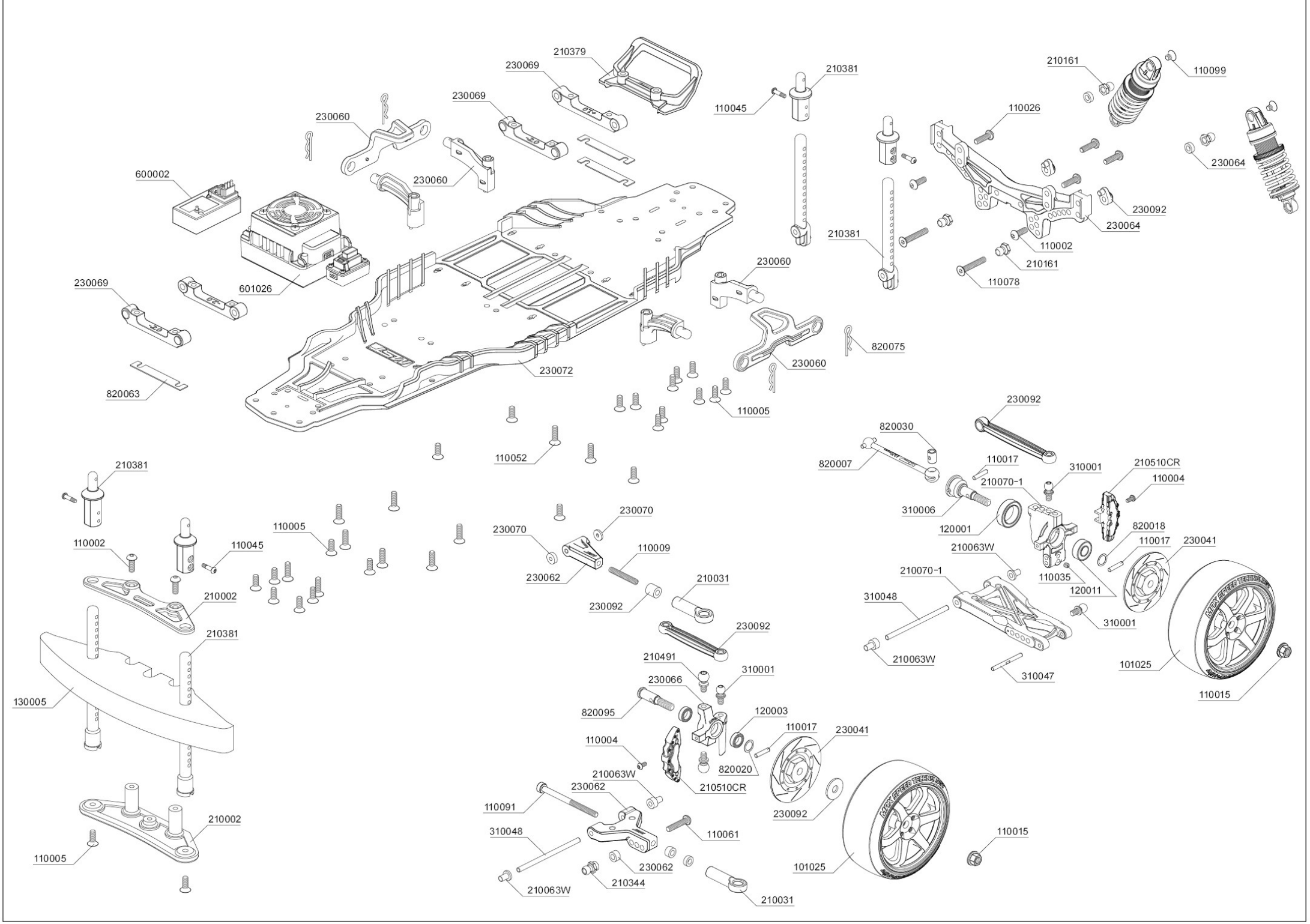
210379
230069
230069
230060
230060
600002
601026
230069
820063
230072
110045
210381
210381
110026
210161
110099
230064
230092
230064
110002
210161
110078
230060
820075
230060
110005
110052
230092
820030
820007
110017
310001
210510CR
110004
210070-1
310006
120001
820018
110017
230041
210063W
110035
120011
210070-1
310048
310001
210063W
310047
101025
110015
210381
110002
110045
110005
210002
210381
130005
210002
110005
230070
230070
110009
230062
230092
210031
230092
210491
310001
230066
820095
120003
110017
230041
110004
820020
210063W
210510CR
230062
110091
230092
310048
110061
230062
210344
210063W
210031
110015
101025