マヤコ | Mayako

Instruction Manual MX8-24R

Version 1.1

CONTENTS

It is reccomended to check the latest base setup when building your MX8!
This can be found on the Mayako website, Mayako Wiki or my.mayako pages (scan the QR code on your chassis)

WELCOME TO THE MAYAKO COMMUNITY

Mayako is a brand building more than an industry leading 8th scale platform. We know that performance at the track is just the beginning of your enjoyment in RC.

Every purchase of a Mayako MX8 invites you to the growing Worldwide Community of passionate individuals. When you purchase your kit directly from Mayako, a link to the Mayako Discord is provided in the confirmation email. Alternatively, scan the QR code on the chassis to unlock the full potential of your new purchase!

The MX8 is designed to be easy to drive and adjust out of the box, building on the success of the MX8-22. This manual provides the instructions to build the MX8-24R, which has a configuration of:

- High KPI knuckles and hubs (KPI 1 / Caster 1)
- Front and rear upper links for a forgiving car
- 5x1.5mm pistons front and rear
- Medium (Brown) springs front and rear
- 2.3mm front roll bar and 2.5mm rear roll bars

With any questions or issues, please contact us!

SHOCK BUILD

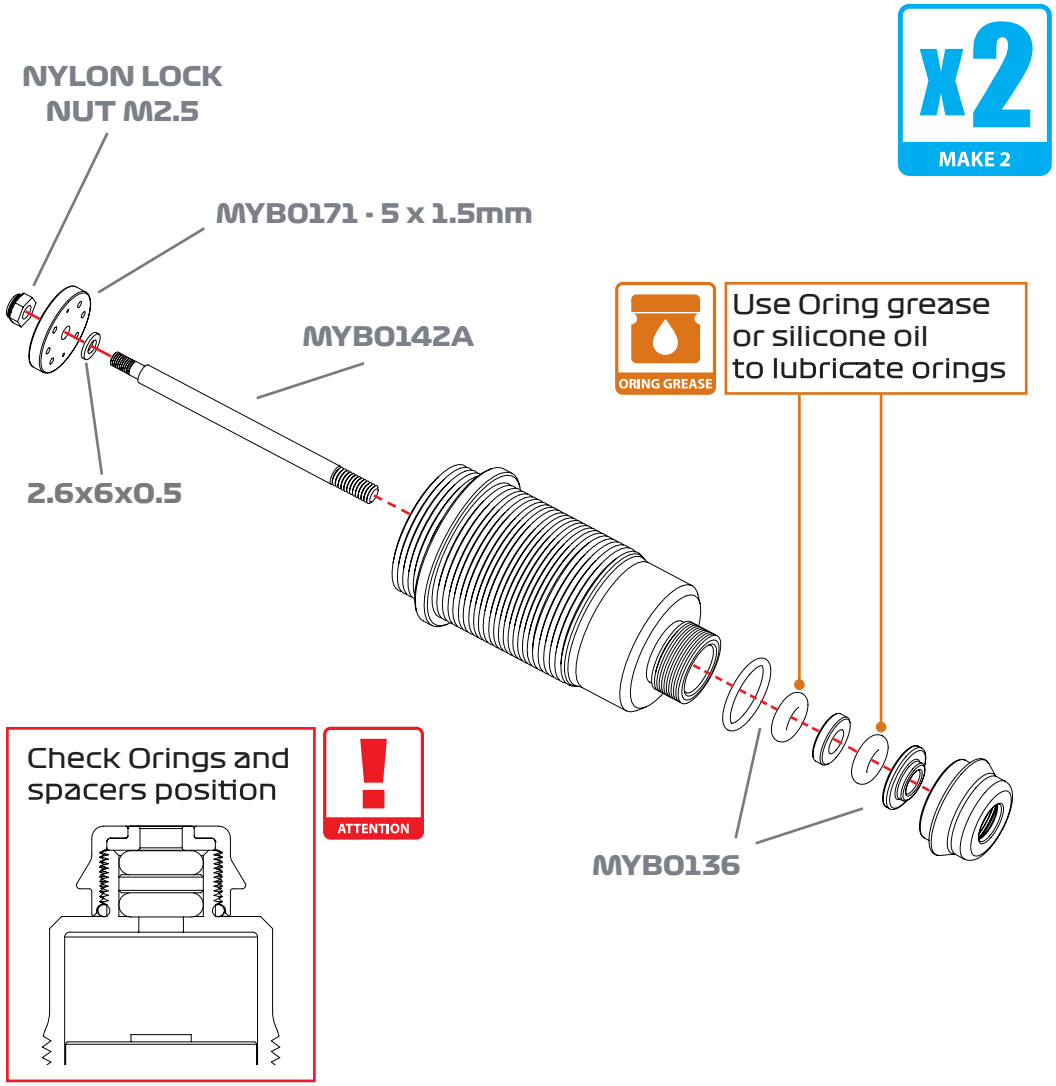

NOTE
Both long and shock ends are included in the kit. For standard setup, use the short shock ends

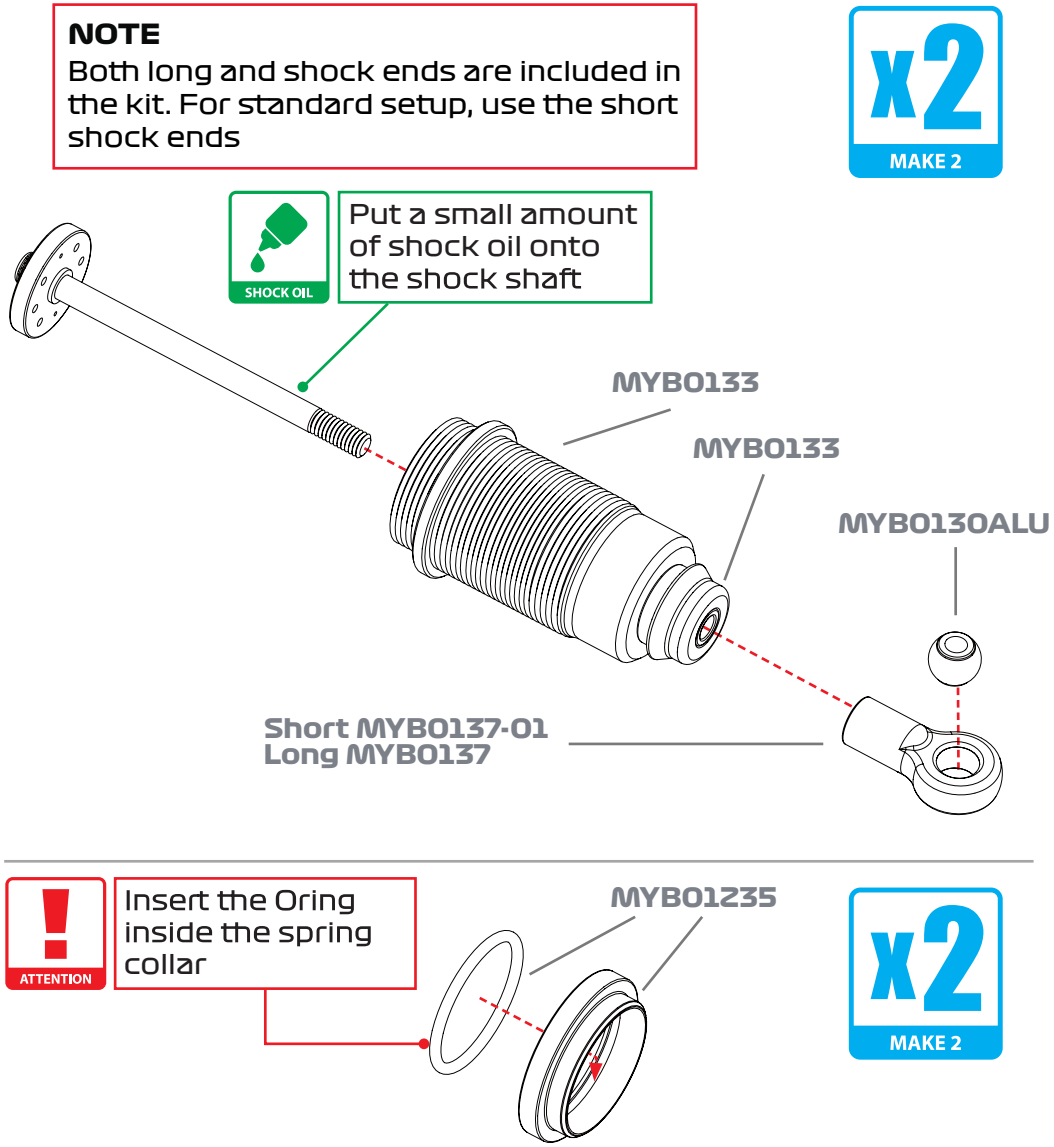

OPTIONS
MYB0142-01A Long shock shaft
MYB0171 Piston 5x1,5
MYB0172 Piston 6x1,3
MYB0174 Piston 8x1,3
MYB0176 Piston 7x1,3
MYB0177 Piston 7x1,4
MYB0173 Piston 8x1,2
MYB0175 Piston blank

Normal oil for 20deg is:
5x1.5/5x1.5 - 600/450
6x1.3/6x1.4 - 500/450
7x1.3/7x1.4 - 550/550
8x1.2/8x1.3 - 550/500

x2 MAKE 2

ATTENTION

Push the Oring into he shock cap

SHOCK OIL

Fill up with silicone oil

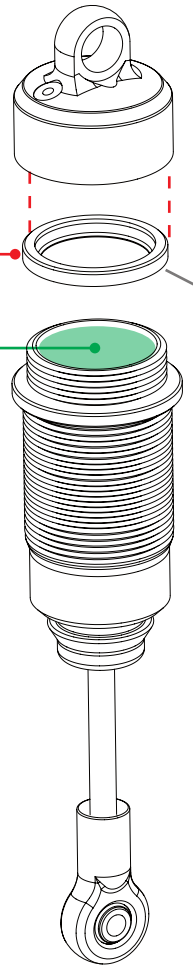

x2 MAKE 2

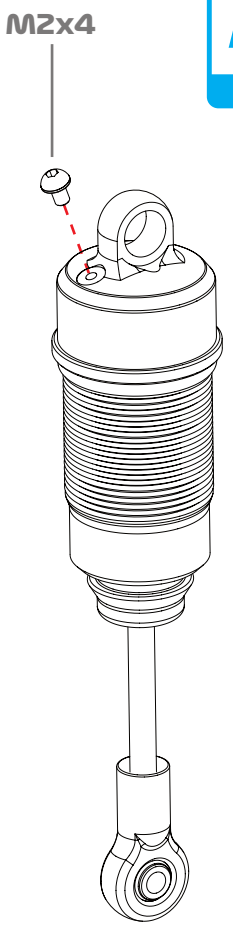

SHOCK OIL AT 20°C

Piston	CST	
5x1.5	600	MX8-24R
6x1.3	500	
7x1.3	550	
8x1.2	550	

Below 15°C
Adjust 50 cst thinner

Above 25°C
Adjust 50 cst thicker

SHOCK OIL

HOW TO BLEED YOUR SHOCK

1. Fill up the shock with silicone oil.
2. Fully extend the shock rod.
3. Move the shock slowly up and down to let all air bubbles out.
4. Apply the cap and fully close (do not ovetighten and do not use any tool to close it).
5. Push slowly the shock shaft all the way in to let all bubbles come out of the hole in the shock cap.
6. With the shock shaft all the way in, assemble the screw in the shock cap.

MYH0026

SCREW M2x4 x2

FRONT SHOCK LENGTH

Measure the shock length fully extended

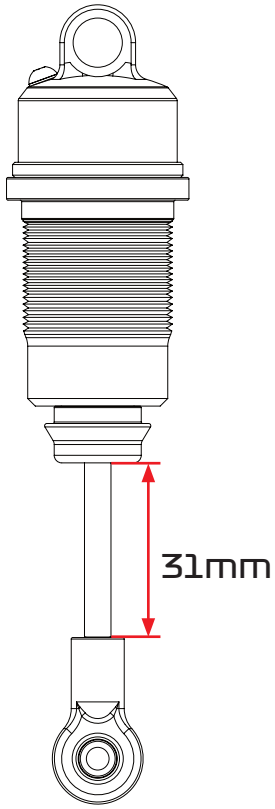

ATTENTION

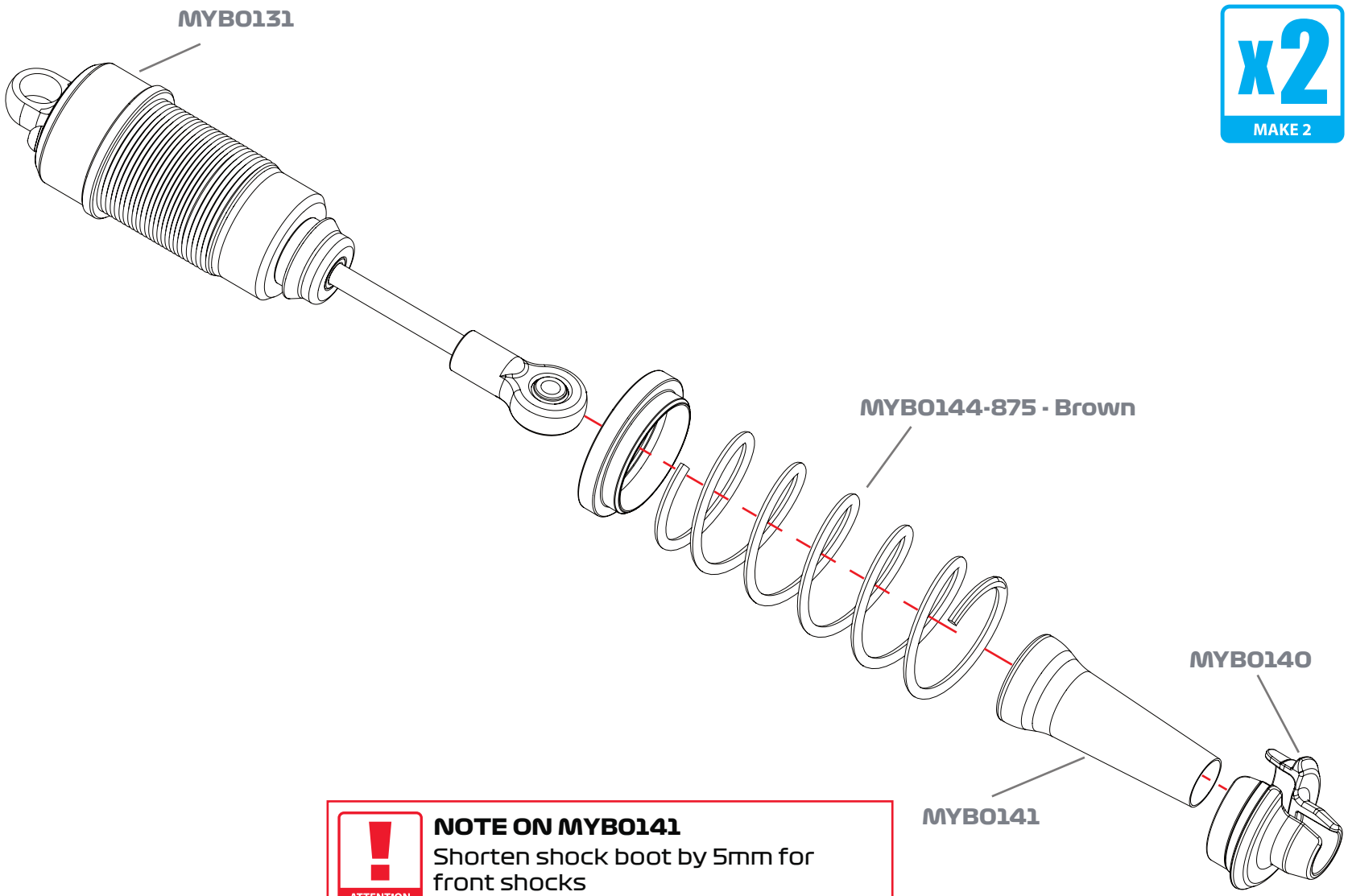

x2 MAKE 2

ATTENTION

NOTE ON MYB0141

Shorten shock boot by 5mm for front shocks

OPTIONS

Progressive
MYB0146-654 Black
MYB0146-704 Grey
MYB146-754 Silver

Linear
MYB0144-85 Black
MYB0144-875 Grey
MYB0144-90 Silver

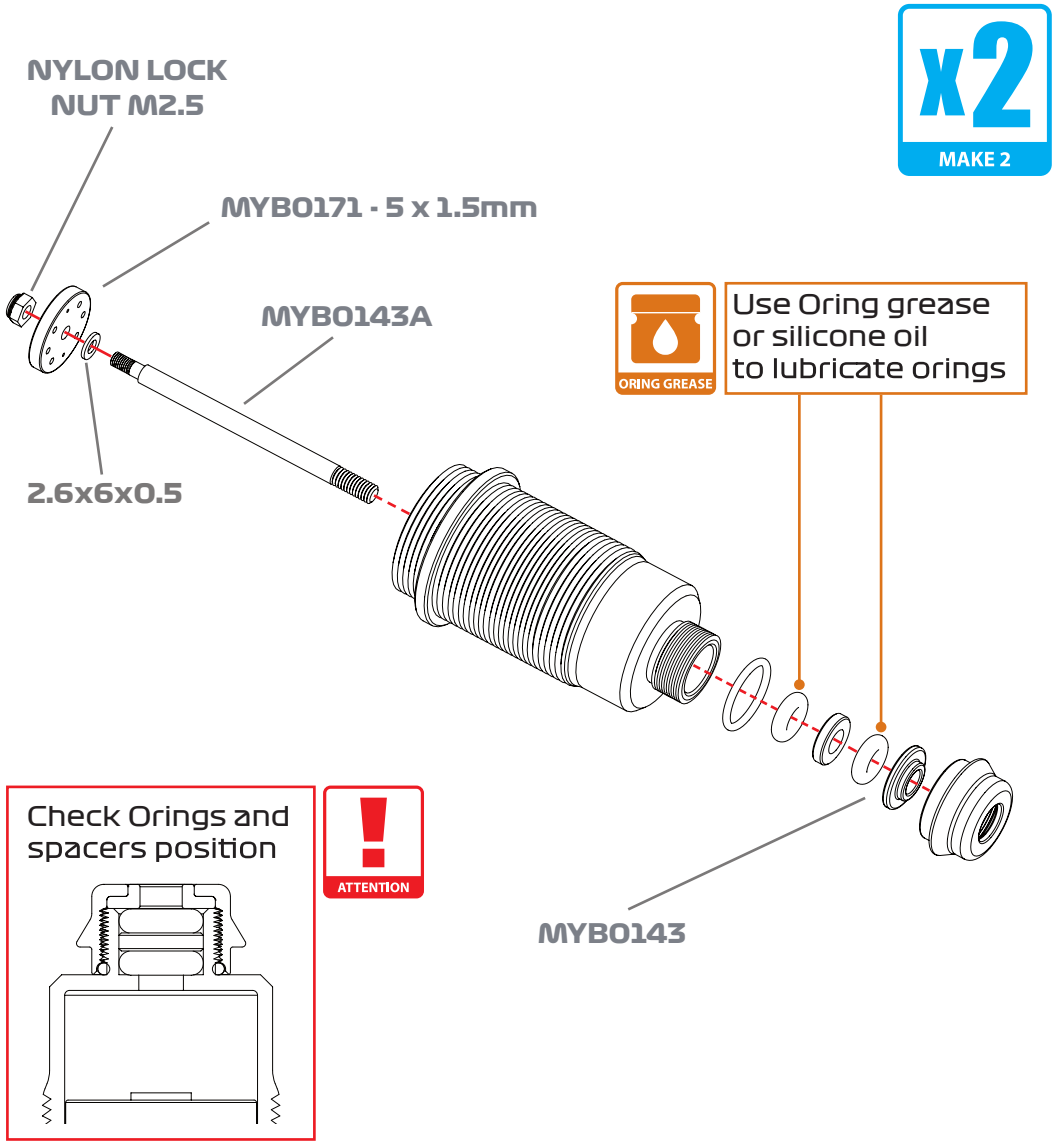

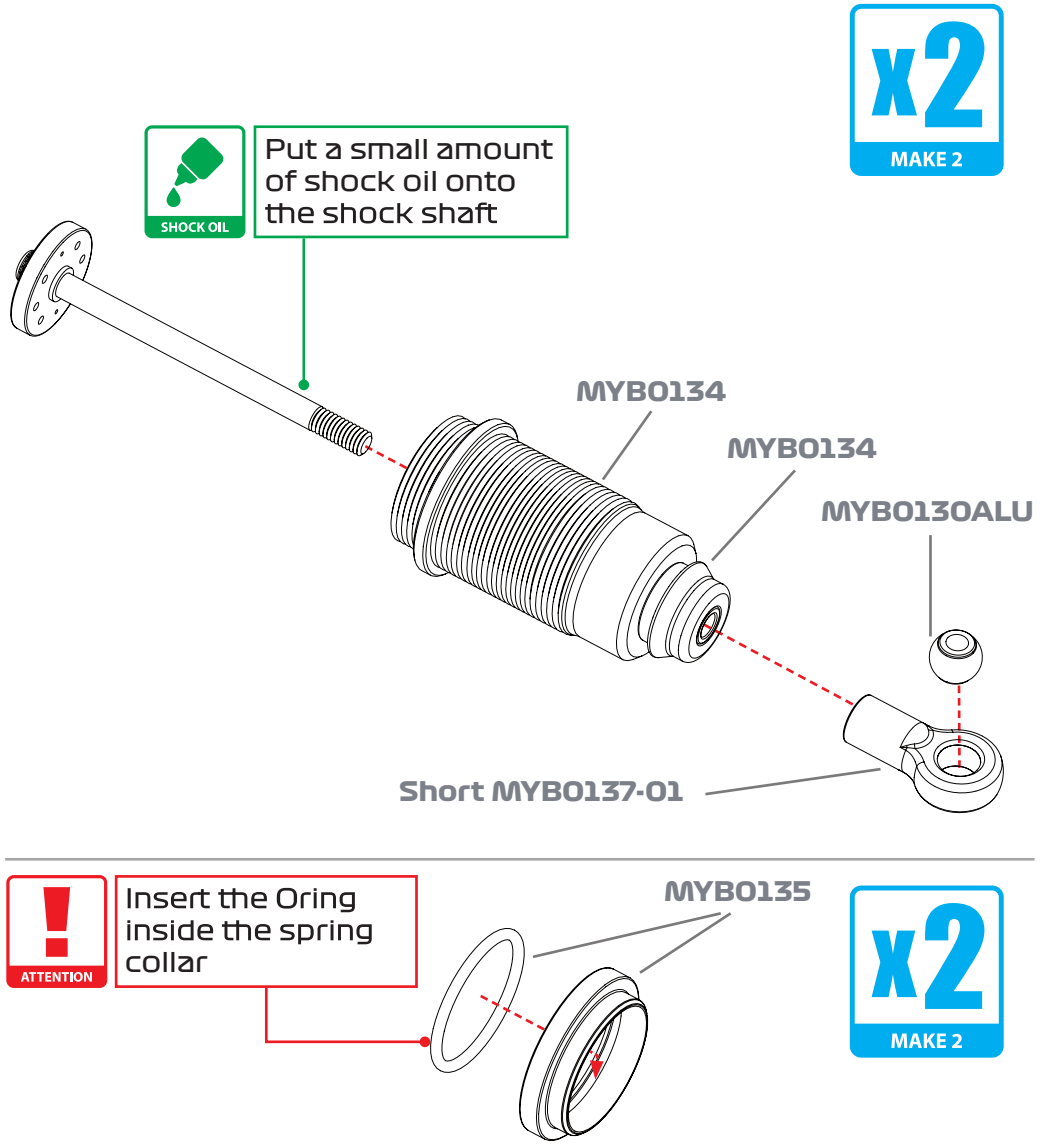

MYH0039

SHIM 2.5x6x0.5 x2

MYH0006

NYLOCK NUT M2.5 x2

OPTIONS

MYB0176 Piston 7x1,3
MYB0171 Piston 5x1,5
MYB0172 Piston 6x1,3
MYB0174 Piston 8x1,3
MYB0177 Piston 7x1,4
MYB0173 Piston 8x1,2
MYB0175 Piston blank

x2
MAKE 2

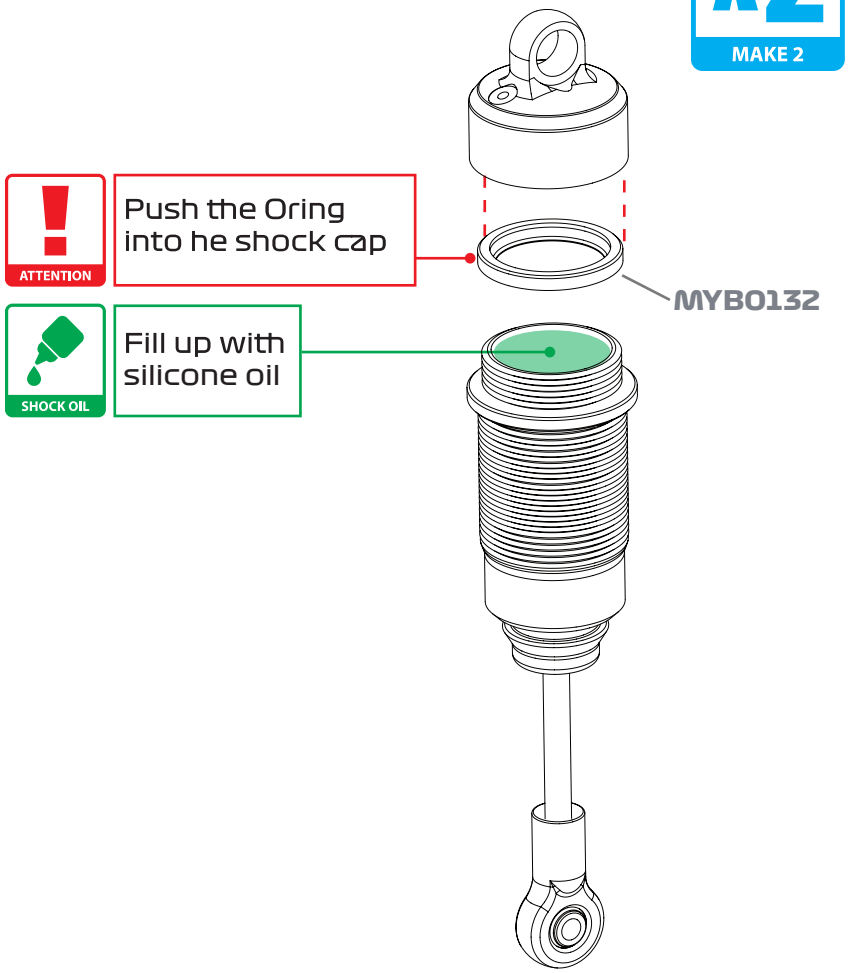

x2
MAKE 2

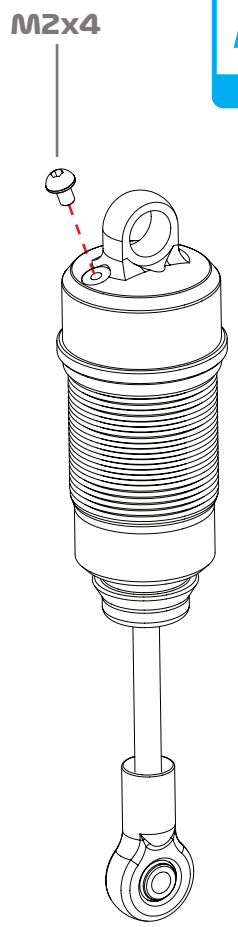

SHOCK OIL AT 20°C

Piston	CST	
5x1.5	450	MX8-24R
6x1.3	450	
7x1.3	550	
8x1.2	500	

Below 15°C
Adjust 50 cst thinner

Above 25°C
Adjust 50 cst thicker

SHOCK OIL

HOW TO BLEED YOUR SHOCK

1. Fill up the shock with silicone oil.
2. Fully extend the shock rod.
3. Move the shock slowly up and down to let all air bubbles out.
4. Apply the cap and fully close (do not ovetighten and do not use any tool to close it).
5. Push slowly the shock shaft all the way in to let all bubbles come out of the hole in the shock cap.
6. With the shock shaft all the way in, assemble the screw in the shock cap.

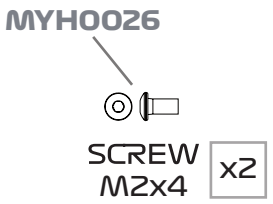

REAR SHOCK LENGTH
Measure the shock length fully extended

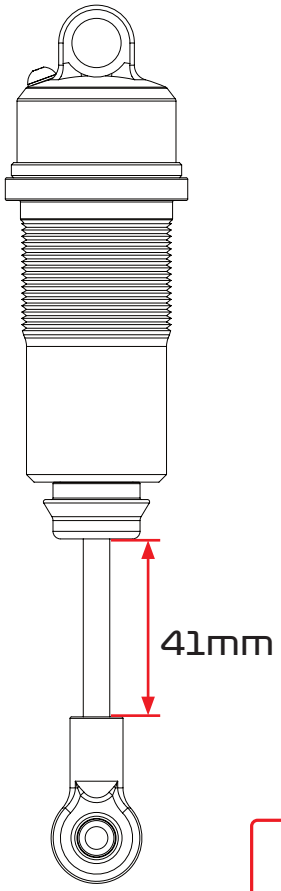

ATTENTION

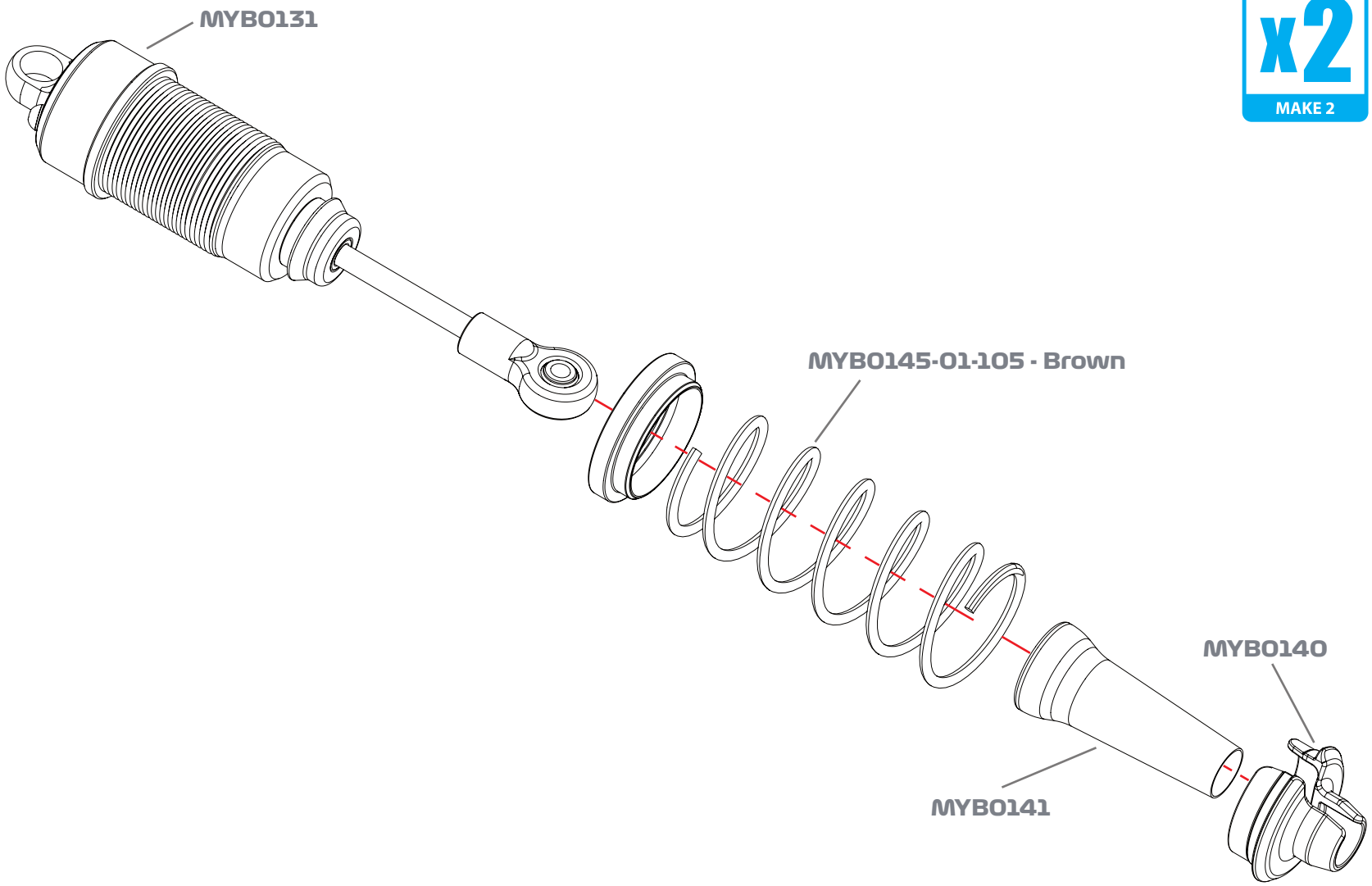

x2
MAKE 2

OPTIONS

Progressive
MYB0147-704 Black
MYB0147-754 Grey
MYB0147-804 Silver

Linear
MYB0145-1025 Black
MYB0145-01-105 Grey
MYB0145-1075 Silver

DIFF BUILD

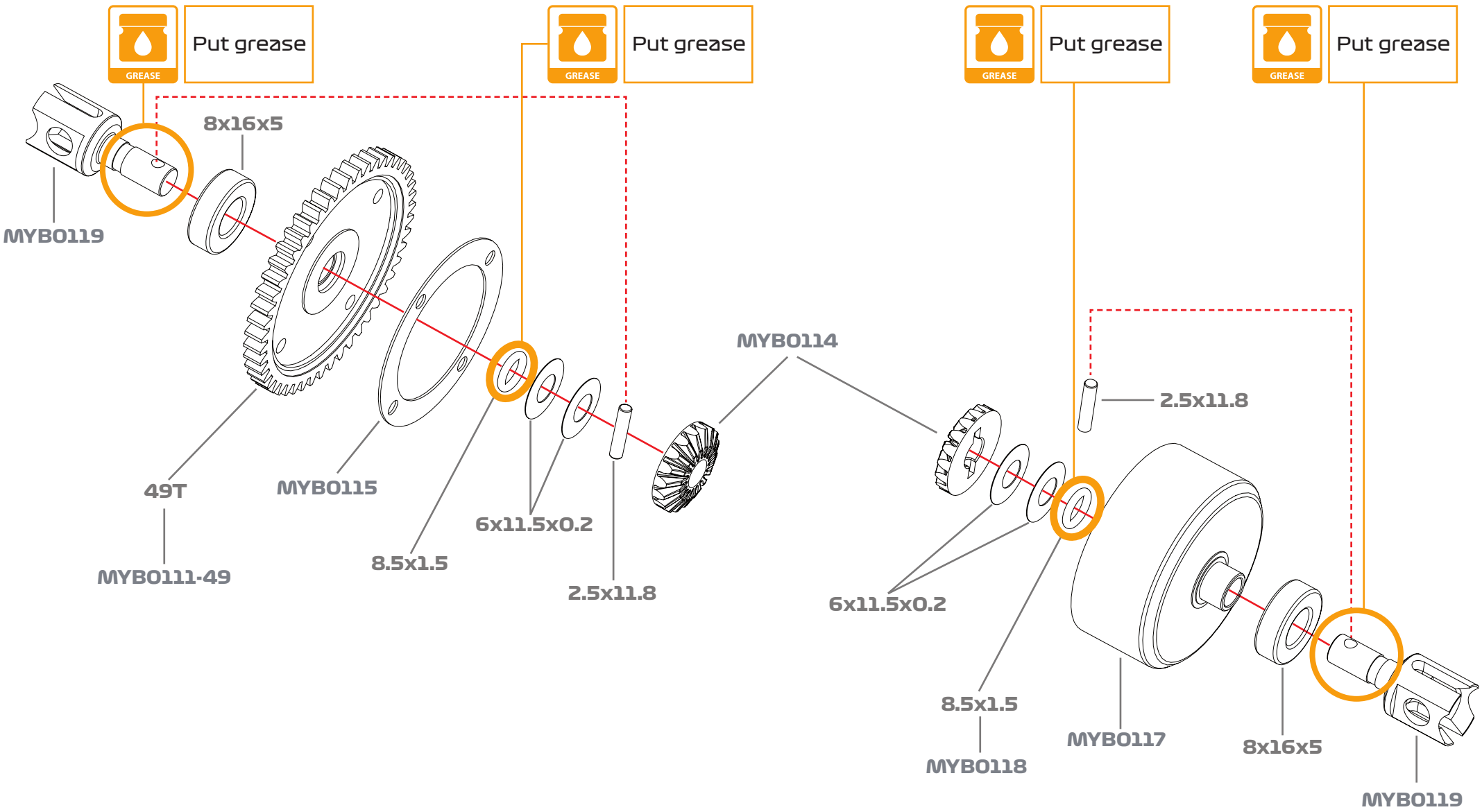

OPTIONS
MYB0111-47 47t
MYB0111-48 48t
LW MYB0111-48LW 48t
MYB0111-49 49t
LW MYB0111-49LW 49t

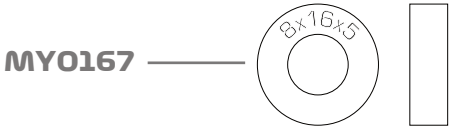

BEARING 8x16x5 x2

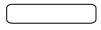

PIN 2x11.8 x2

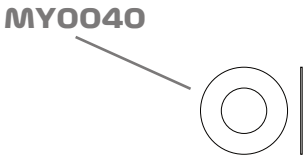

SHIM 6x11.5x0.2 x4

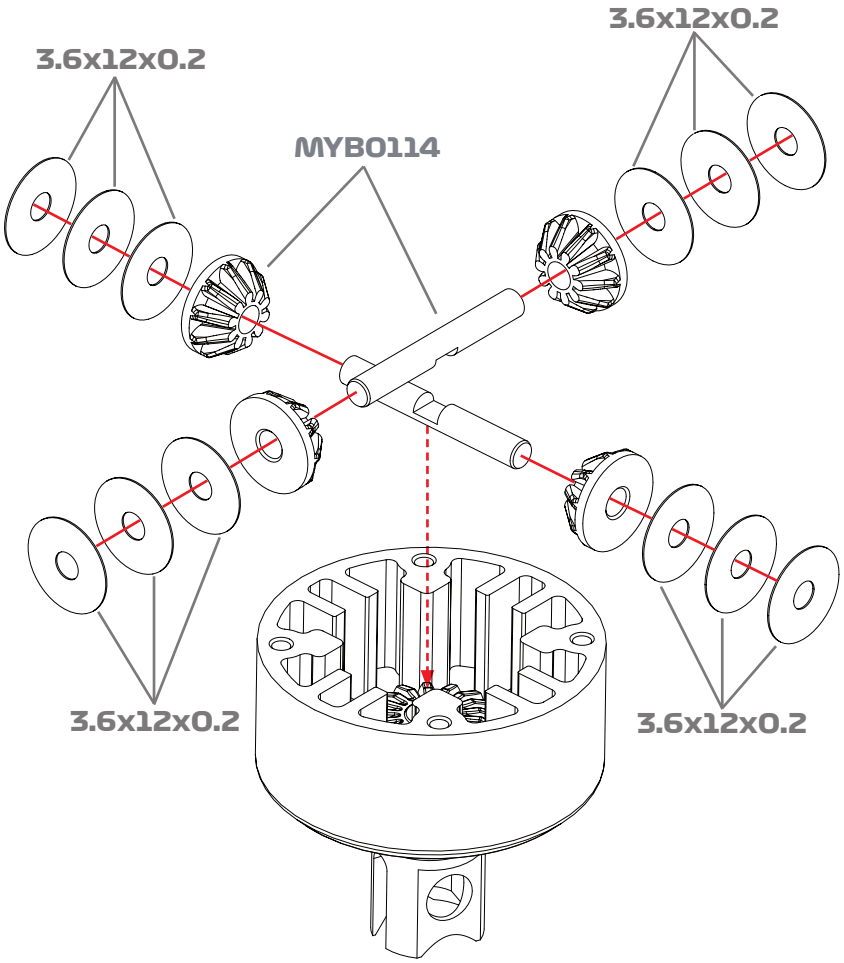

ATTENTION

HOW MUCH OIL?

If you don't have a scale
Fill the center differential with silicone oil 1mm above the crosspin.
Do not overfill.

If you have a scale.
Use a digital scale to measure the exact amount of oil in the differential.

Quantity of oil for centre diff is **6 gr.**

7000cst. easy
10000cst. more drive

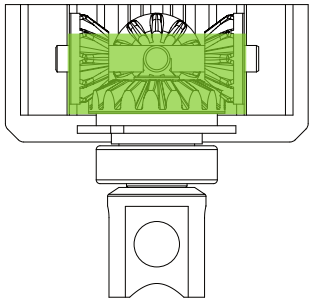

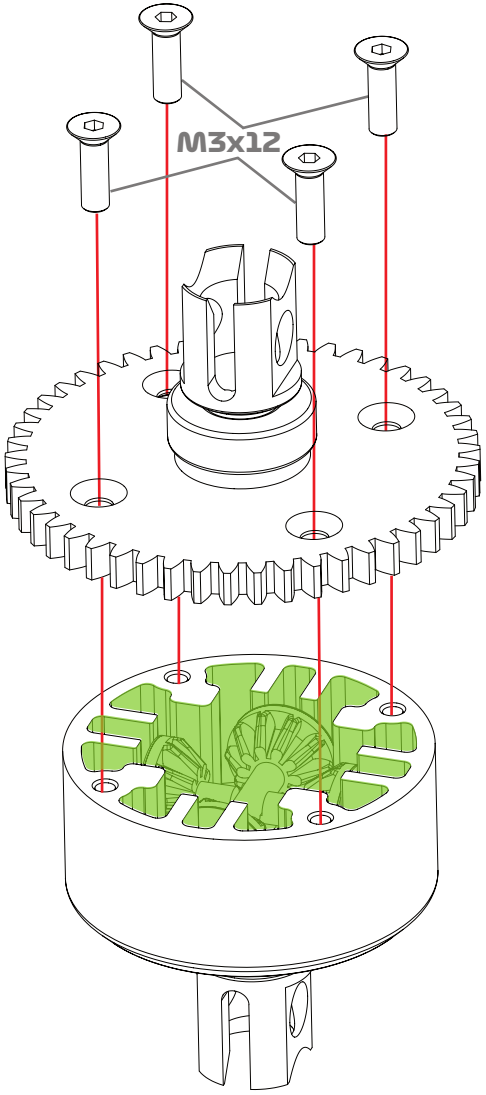

OPTIONS
MYB0121ALU Cross Pins Alu

MYH0041

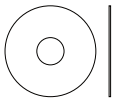

SHIM
3.6x12x0.2 x12

MYH0014

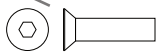

SCREW
M3x12 x4

Put grease

Put grease

Put grease

Put grease

8x16x5

MYB0119

MYB0114

2.5x11.8

45T

MYB0115

6x11.5x0.2

8.5x1.5

MYB0113-45

2.5x11.8

6x11.5x0.2

8.5x1.5

MYB0116

8x16x5

MYB0119

x2

MAKE 2

OPTIONS
MYB0113-43 43t
MYB0113-45 45t
LW MYB0113-45LW 45t

MY0167

8x16x5

BEARING 8x16x5 x2

PIN 2x11.8 x2

MY0040

SHIM 6x11.5x0.2 x4

OPTION
MYB0121ALU Cross Pins Alu

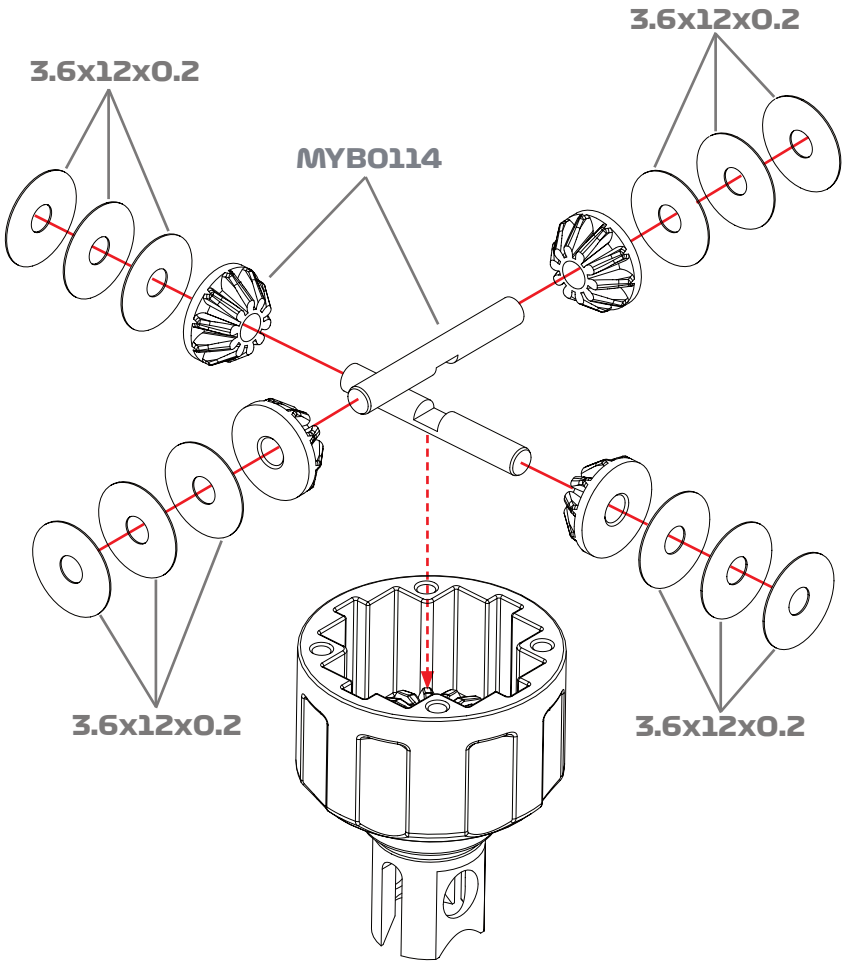

HOW MUCH OIL?

If you don't have a scale
Fill the front or rear differential with silicone oil 1mm above the crosspin.
Do not overfill.

If you have a scale.
Use a digital scale to measure the exact amount of oil in the differential.

Quantity of oil for front or rear differential is **2.7 gr** each.

FRONT **10000cst**
REAR **5000cst**

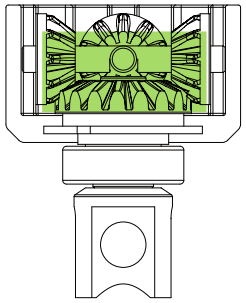

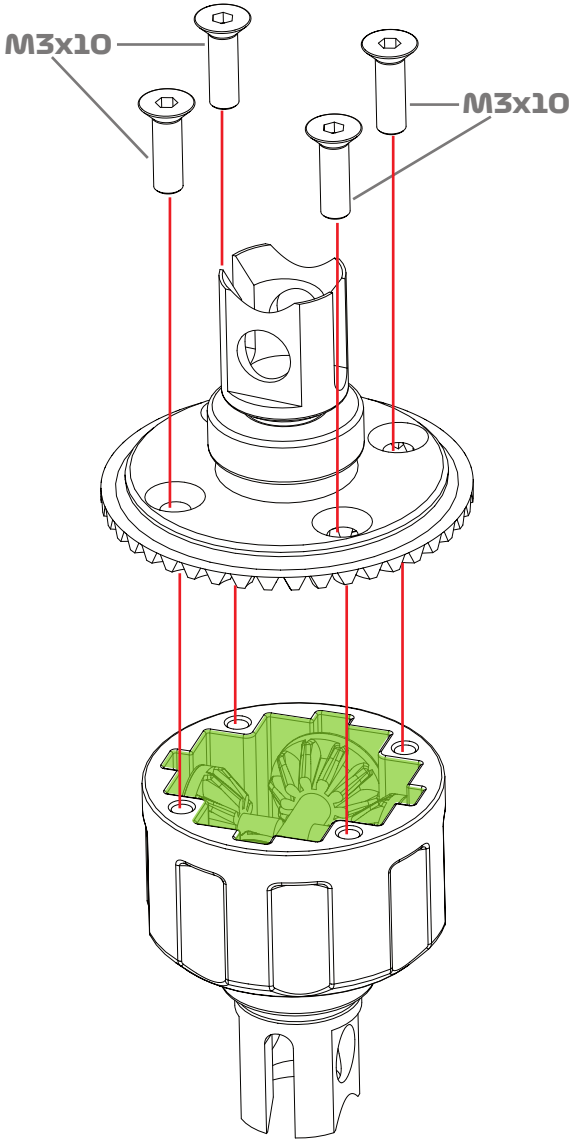

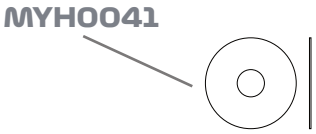

SHIM
3.6x12x0.2 x12

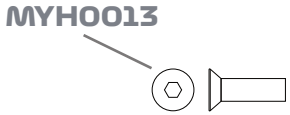

SCREW
M3x10 x4

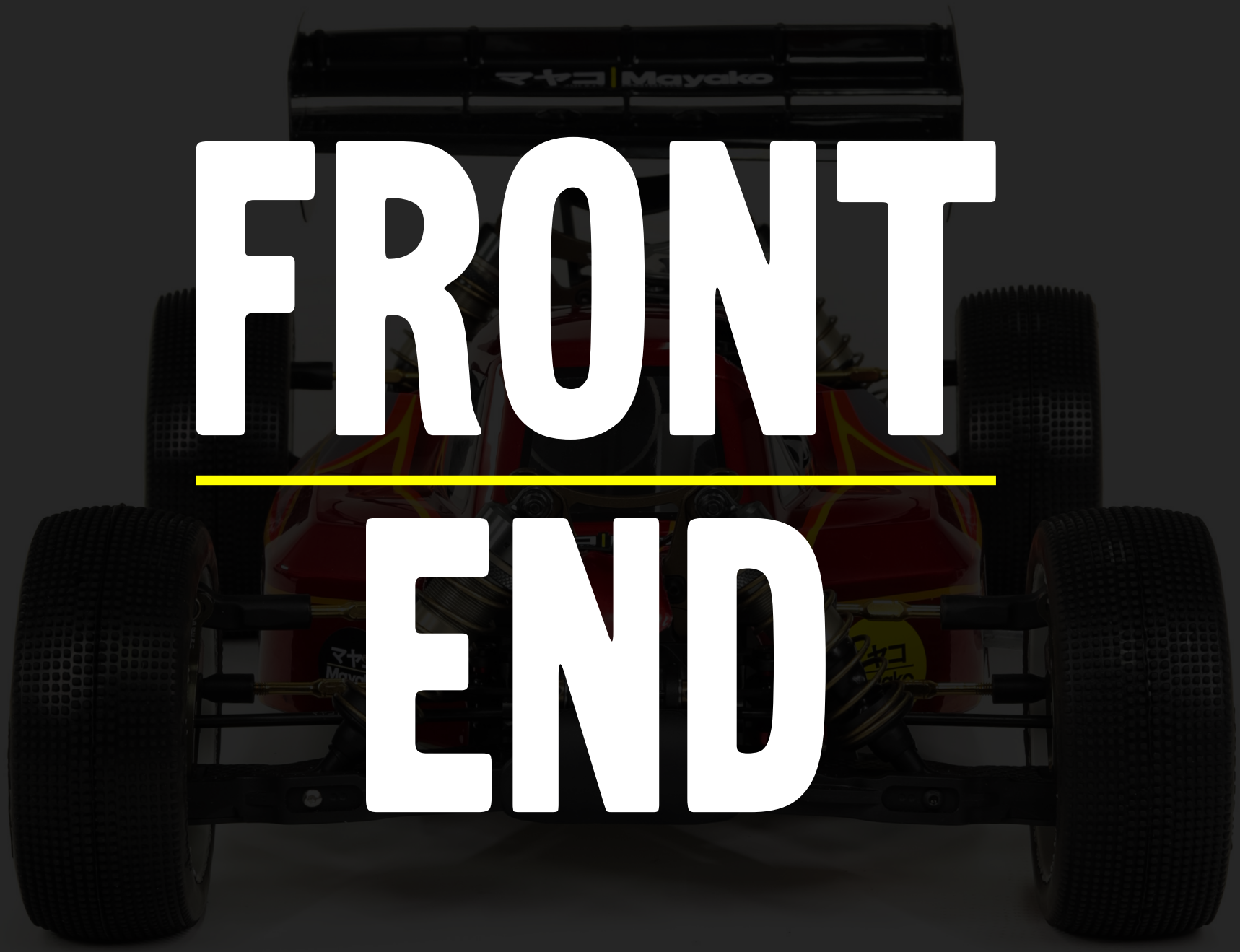

FRONT END

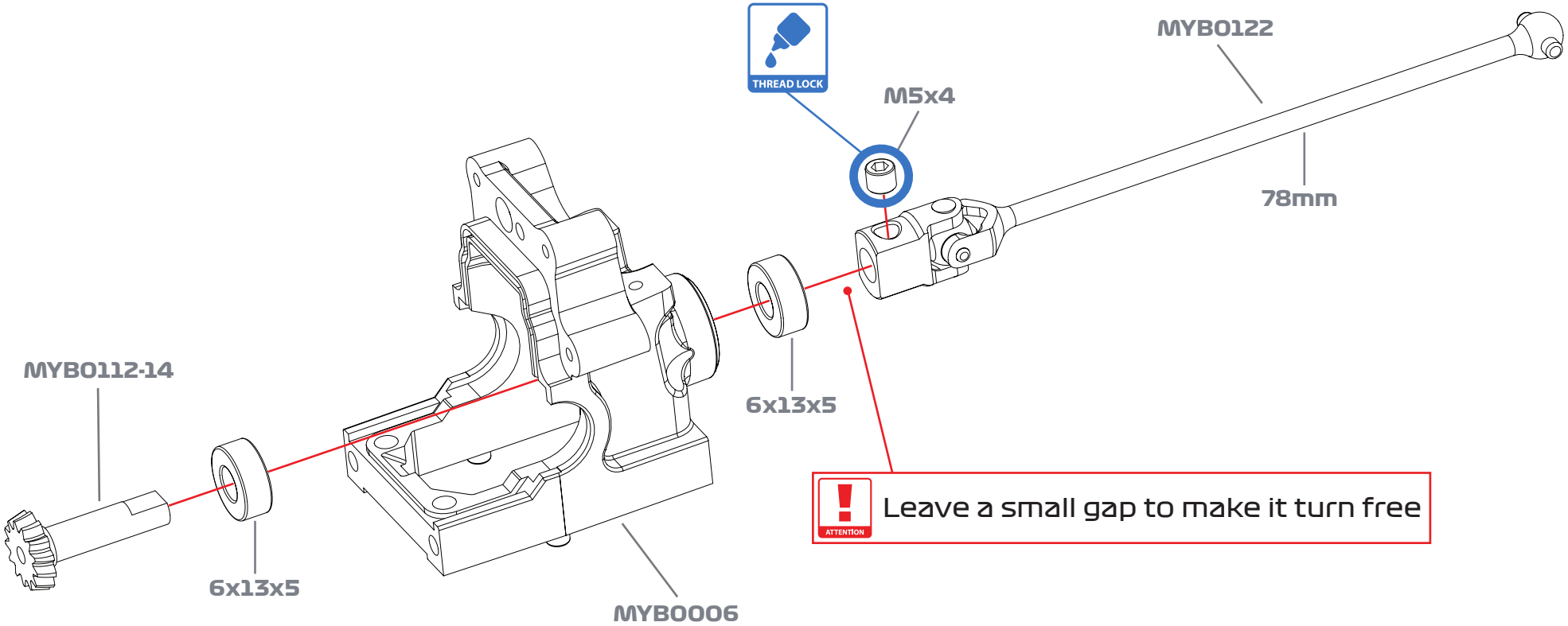

OPTIONS
MYB0112-13 13t
MYB0120 Dogbone outdrive
MYB0120-79 79mm dogbone
MYB0166MXP MXP Bearings

MYB0166

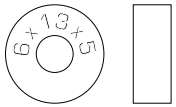

BEARING 6x13x5 x2

MYH005

M5x4 x1

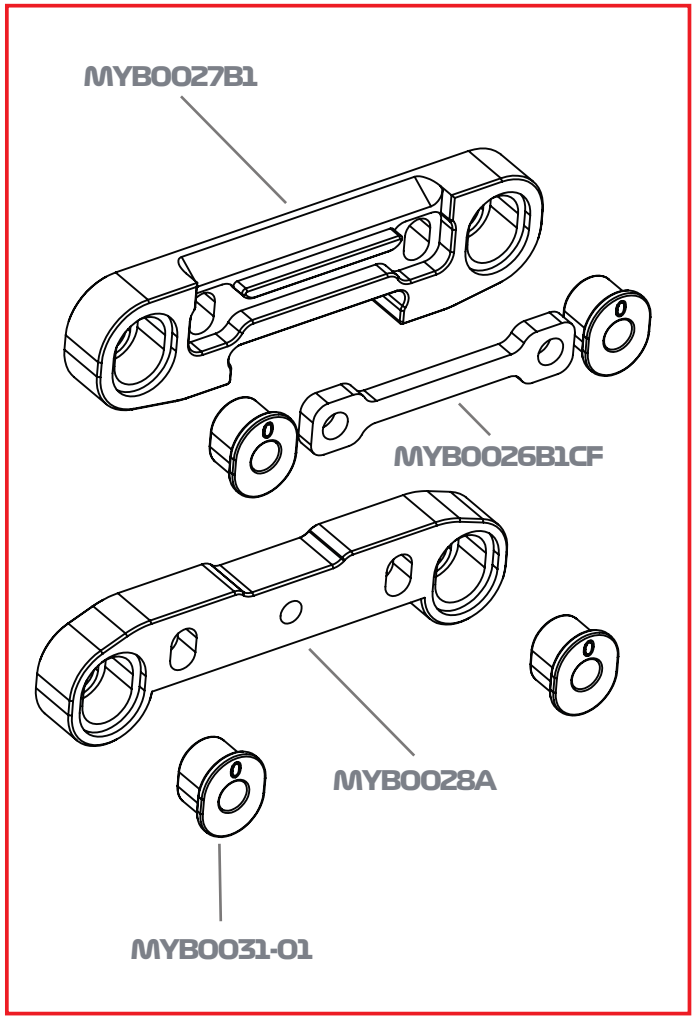

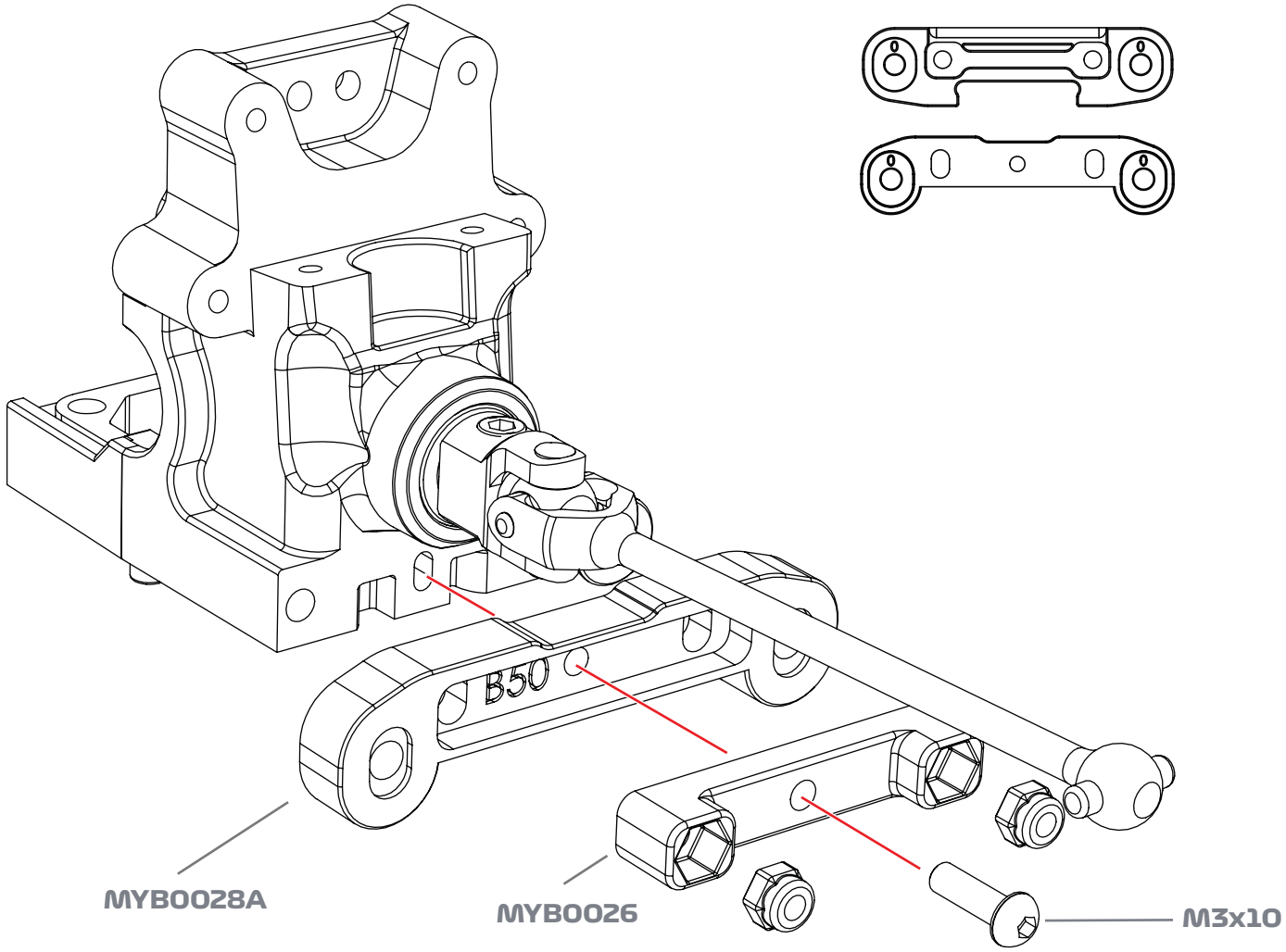

OPTION
MYB0026-01 High or low spacer set

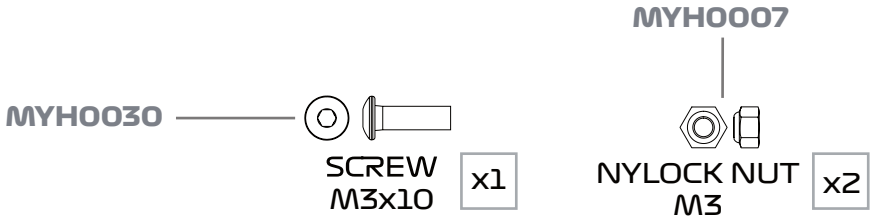

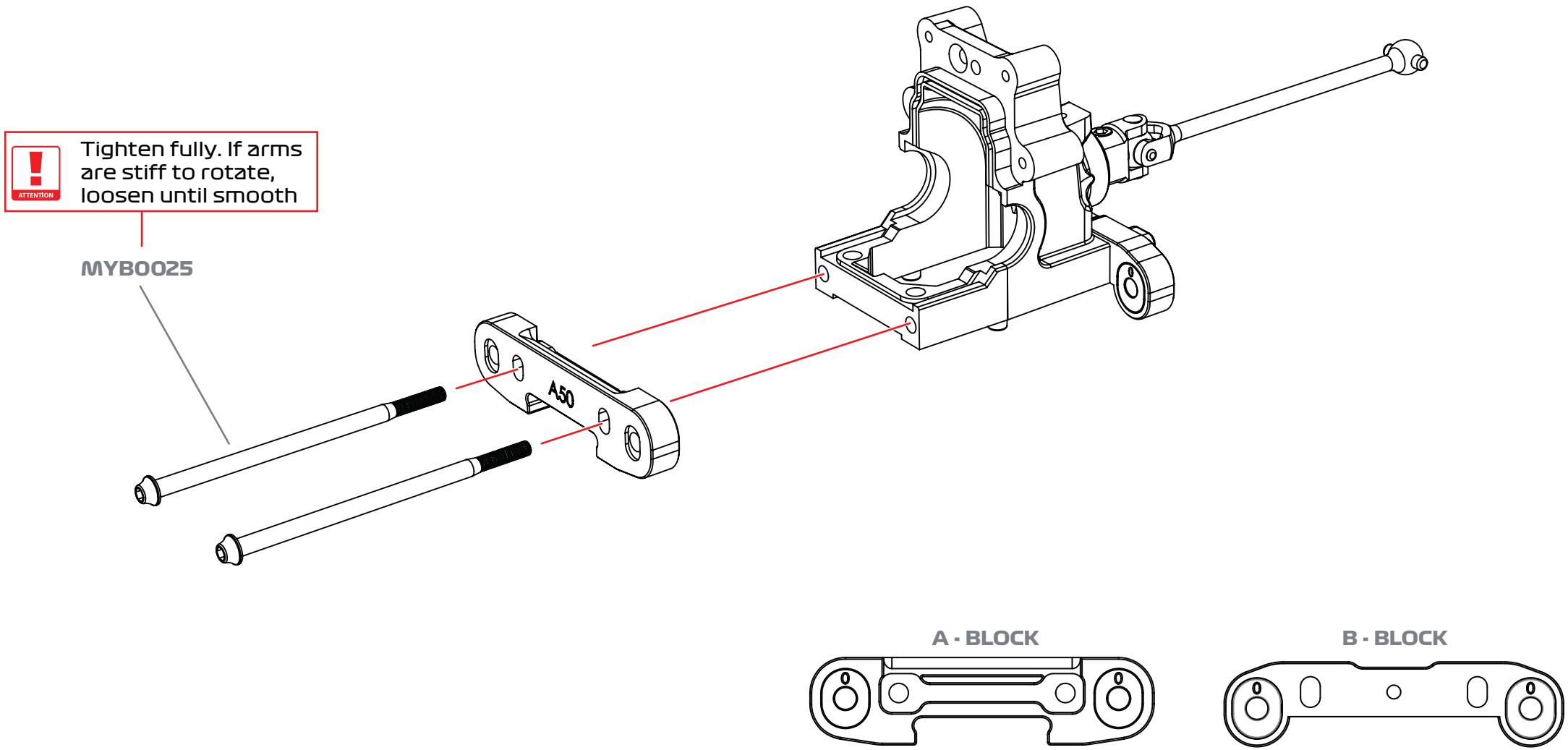

OPTIONS
MYB0026CF CF Spacer set
MYB0025TI TI Gearbox screws
MYB0026-01 High or low spacer set
MYB0026B1CF Carbon A block spacer middle and end, for MYB0027B1

LONG SCREW x2

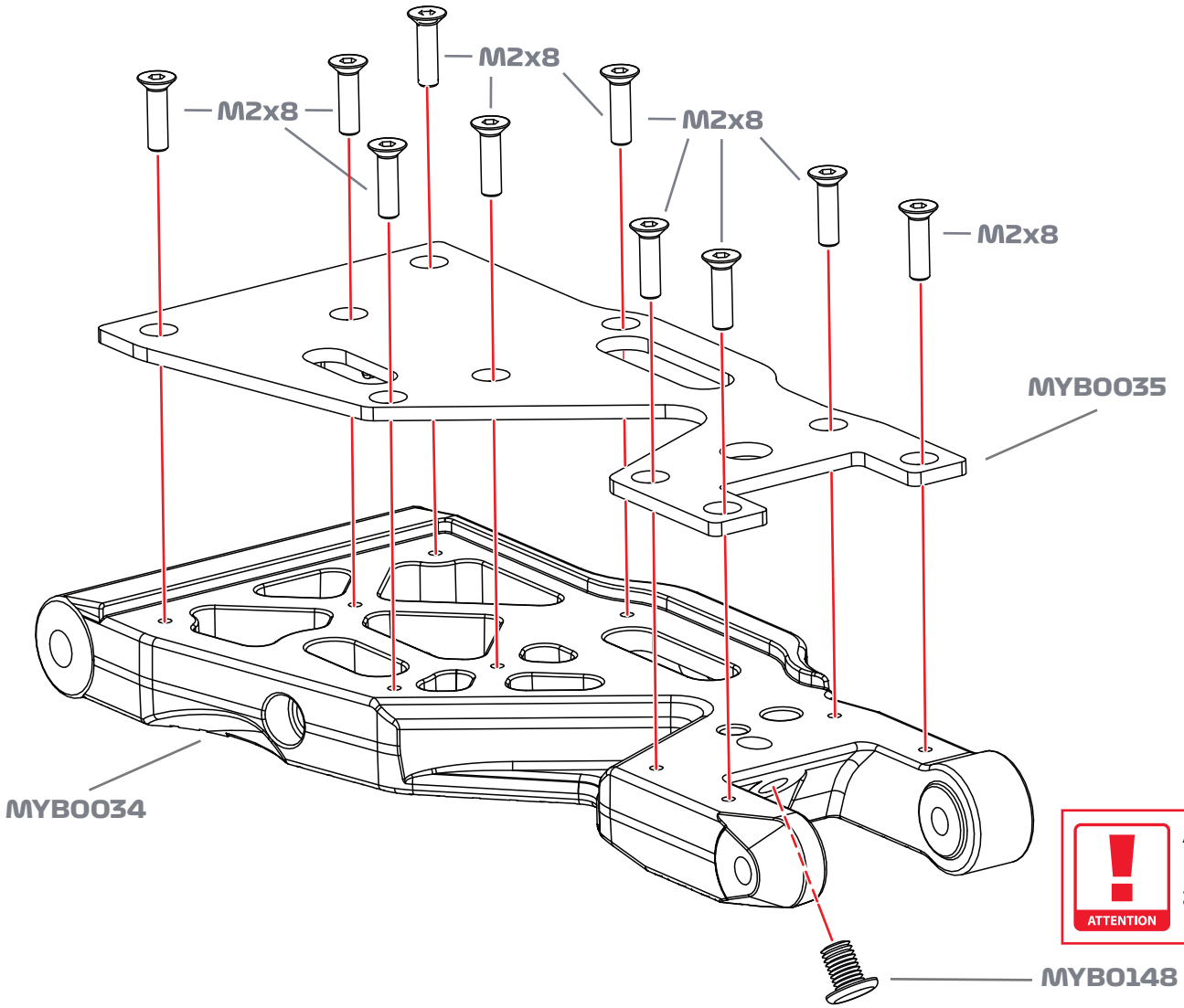

MAKE L=R

ASSEMBLY NOTE
insert driver from bottom of arm to thread droop screw

ATTENTION

OPTION
MYB0035CF CF braces

MYB0010 — SCREW M2x8 x20

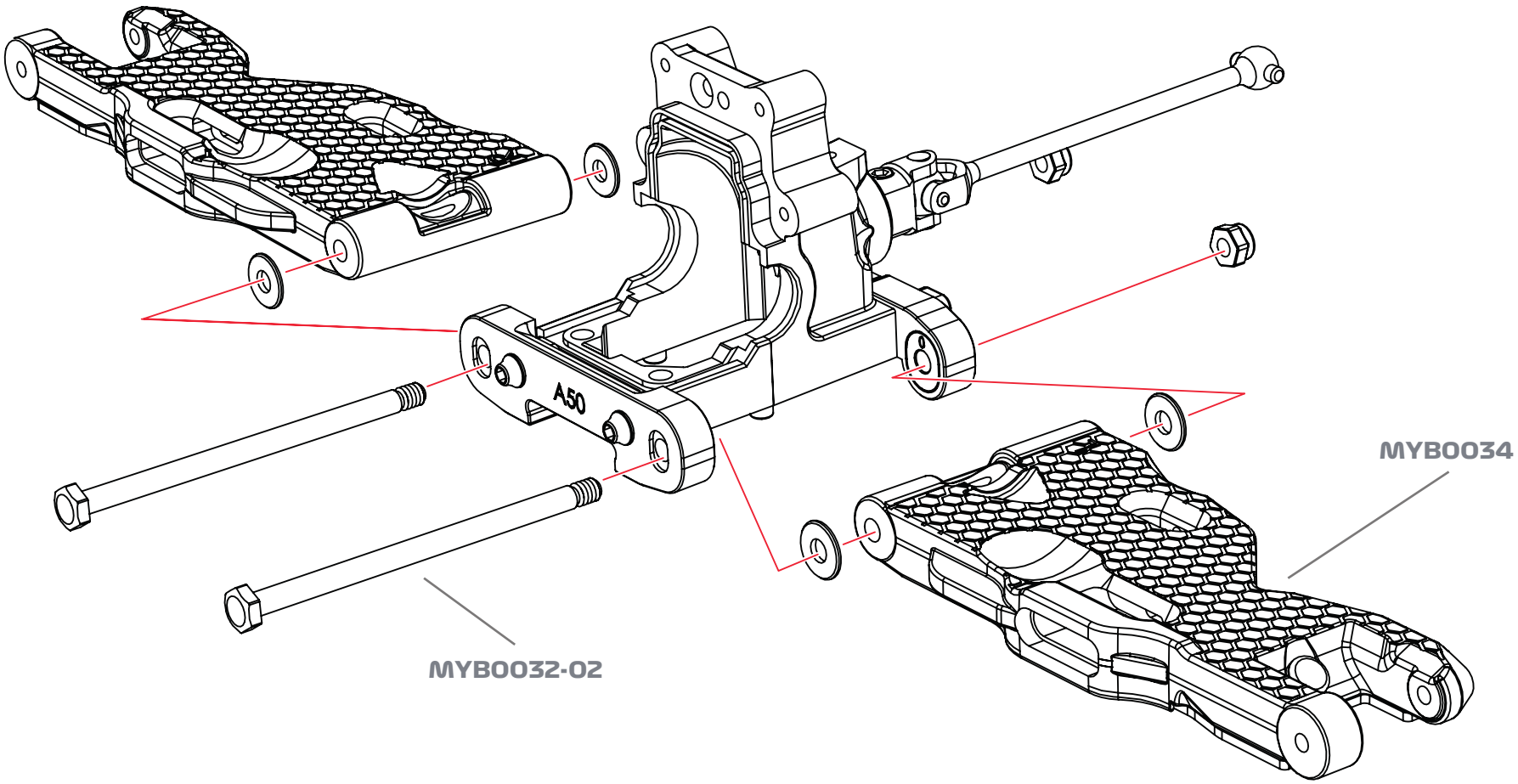

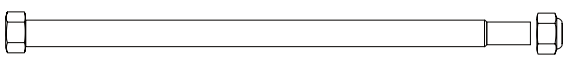

SCREW TYPE HINGE PIN AND M4 NUT x2

MYB0015
MYB0185
M3x10
MYB0026
M3x12
M3x15
MYB0006
A50
GREASE
Put grease

OPTIONS
MYB0015CF CF Tower
MYB0026CF CF Spacer set
MYB0026-01 High or low spacer set


SCREW M3x10 x1

MYH0013
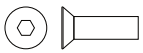
SCREW M3x10 x1

MYH0031
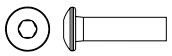
SCREW M3x12 x2

MYH0015
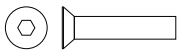
SCREW M3x15 x2

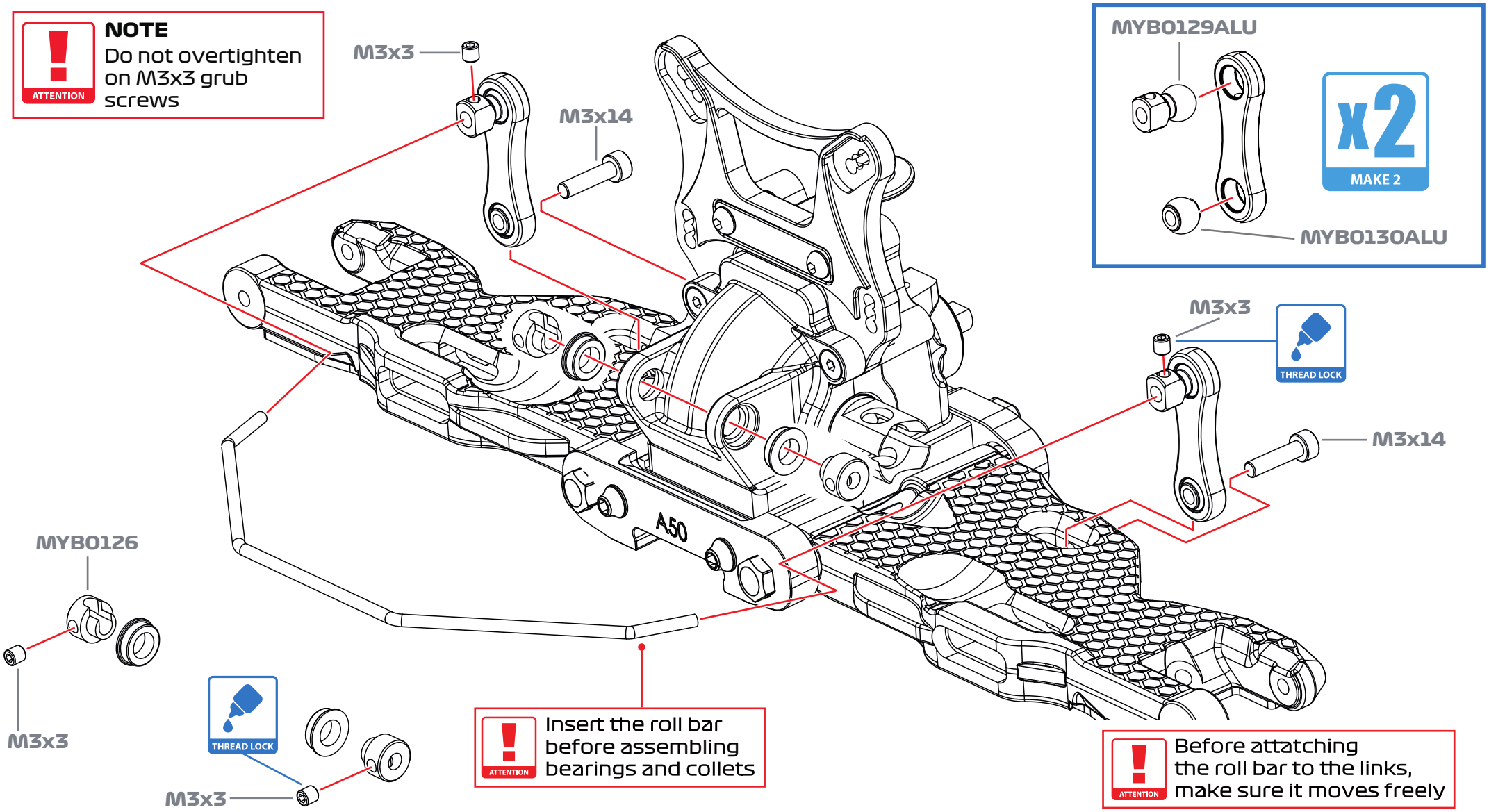

OPTIONS

MYB0127-01 Adjustable roll links
MYB0128 Link turnbuckle screw
MYB0124-21 2,1mm Front Anti-roll bar
MYB0124-22 2,2mm Front Anti-roll bar
MYB0124-23 2,3mm Front Anti-roll bar
MYB0124-24 2,4mm Front Anti-roll bar

MYH0023

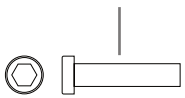

M3x14 x2

MYH0003

M3x3 x4

MYB0170

FLANGED BEARING 5x8x2.5 x2

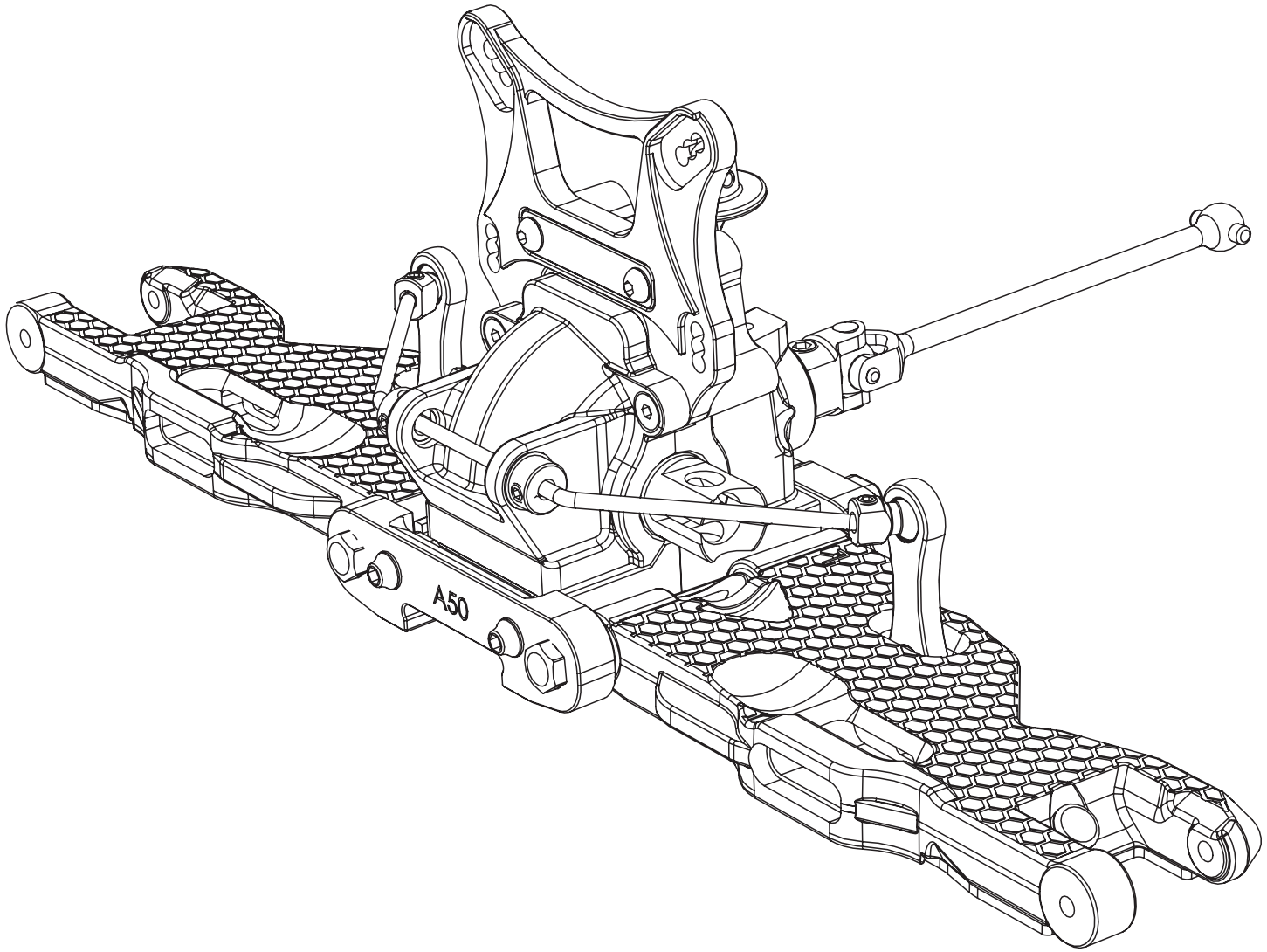
A50

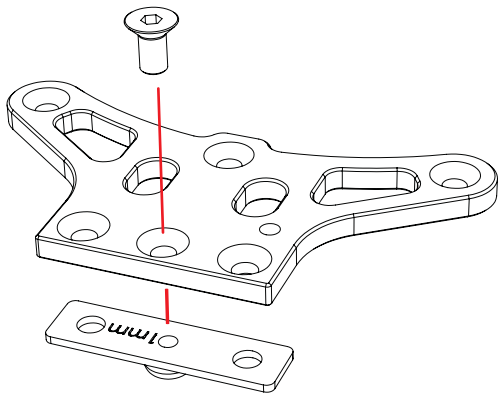

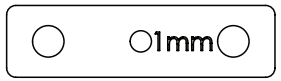

MYB0007

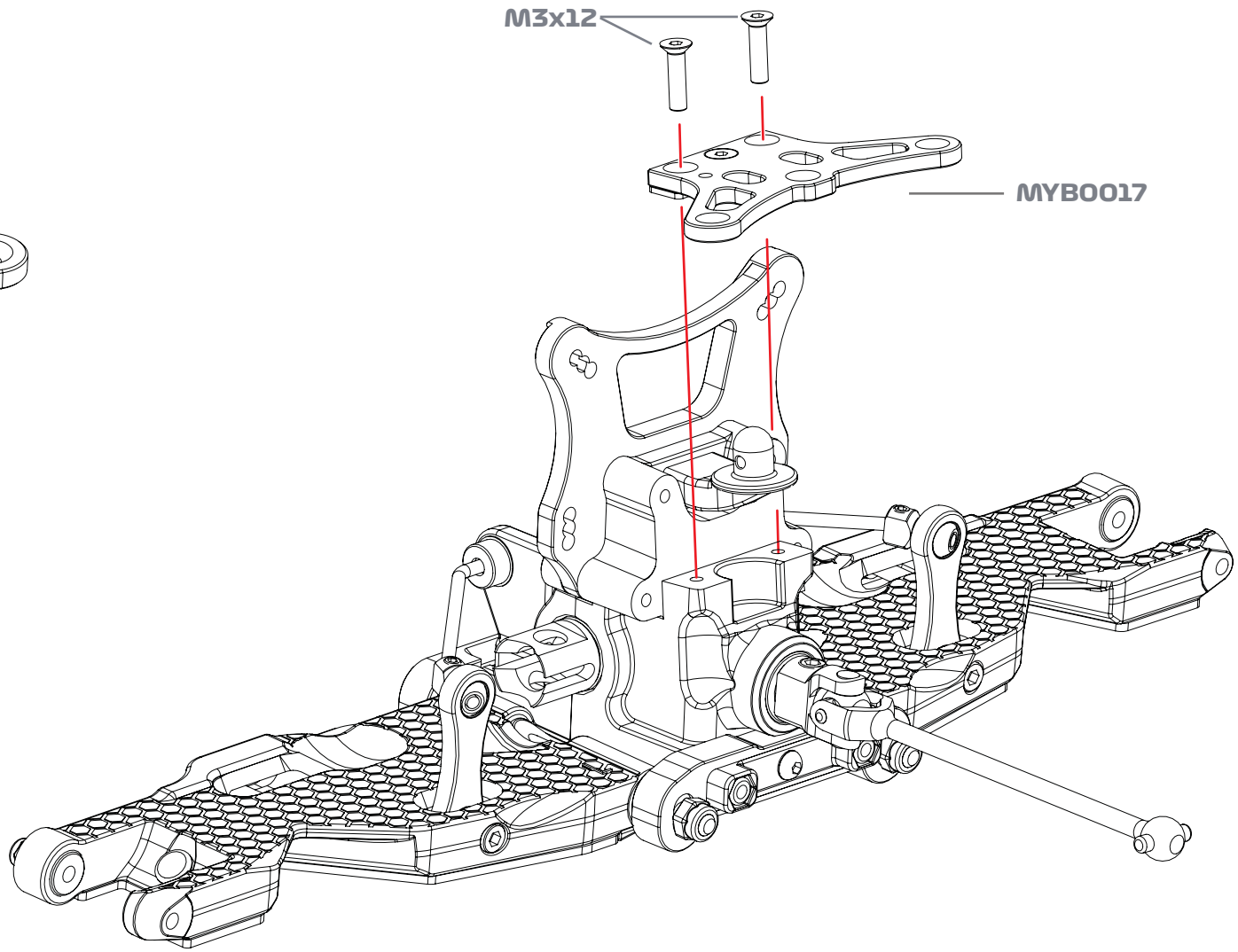

OPTIONS
MYB0017CF CF Steering plate
MYB0008 2mm spacer set

MYB0013

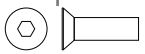

SCREW M3x10 x1

MYB0014

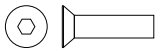

SCREW M3x12 x2

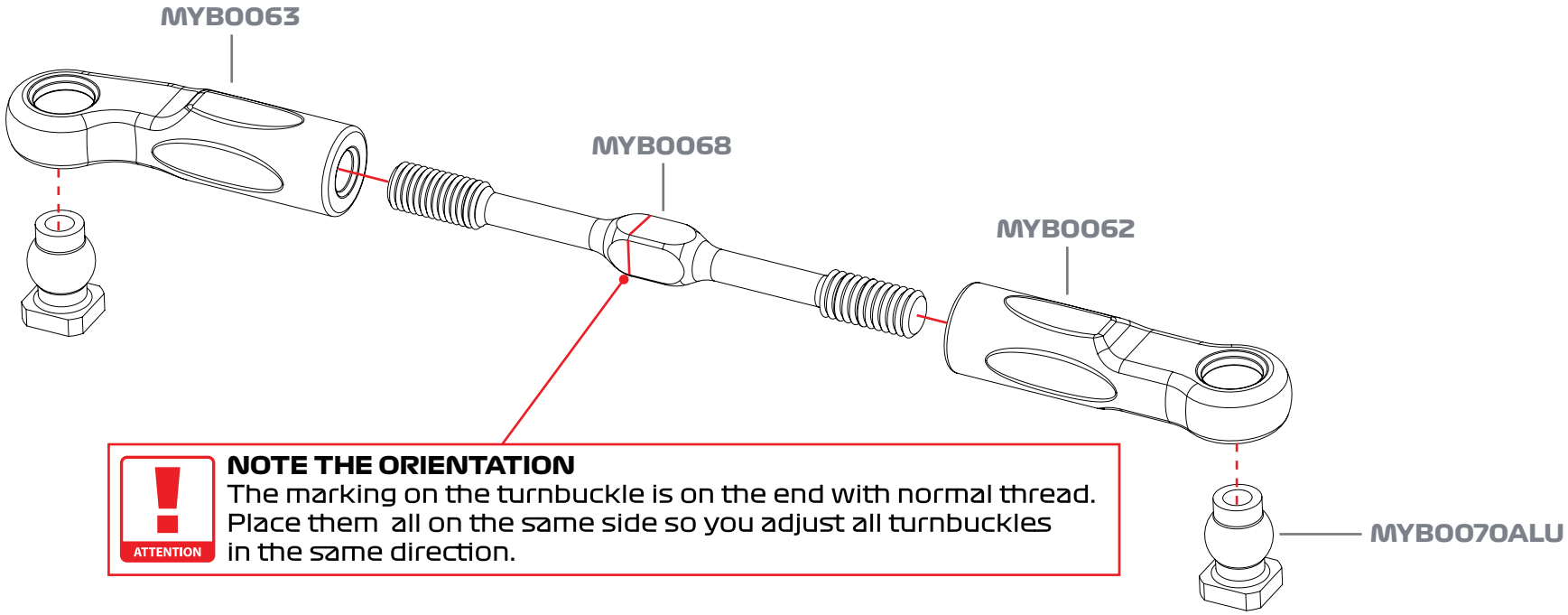

MAKE L=R

NOTE THE ORIENTATION
The marking on the turnbuckle is on the end with normal thread. Place them all on the same side so you adjust all turnbuckles in the same direction.

ATTENTION

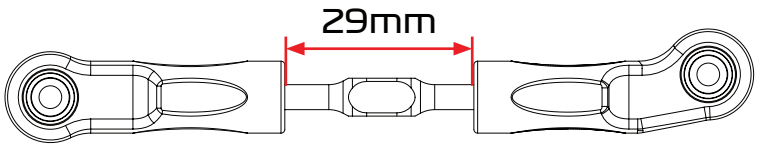

OPTION
MYB0068TI TI Turnbuckles

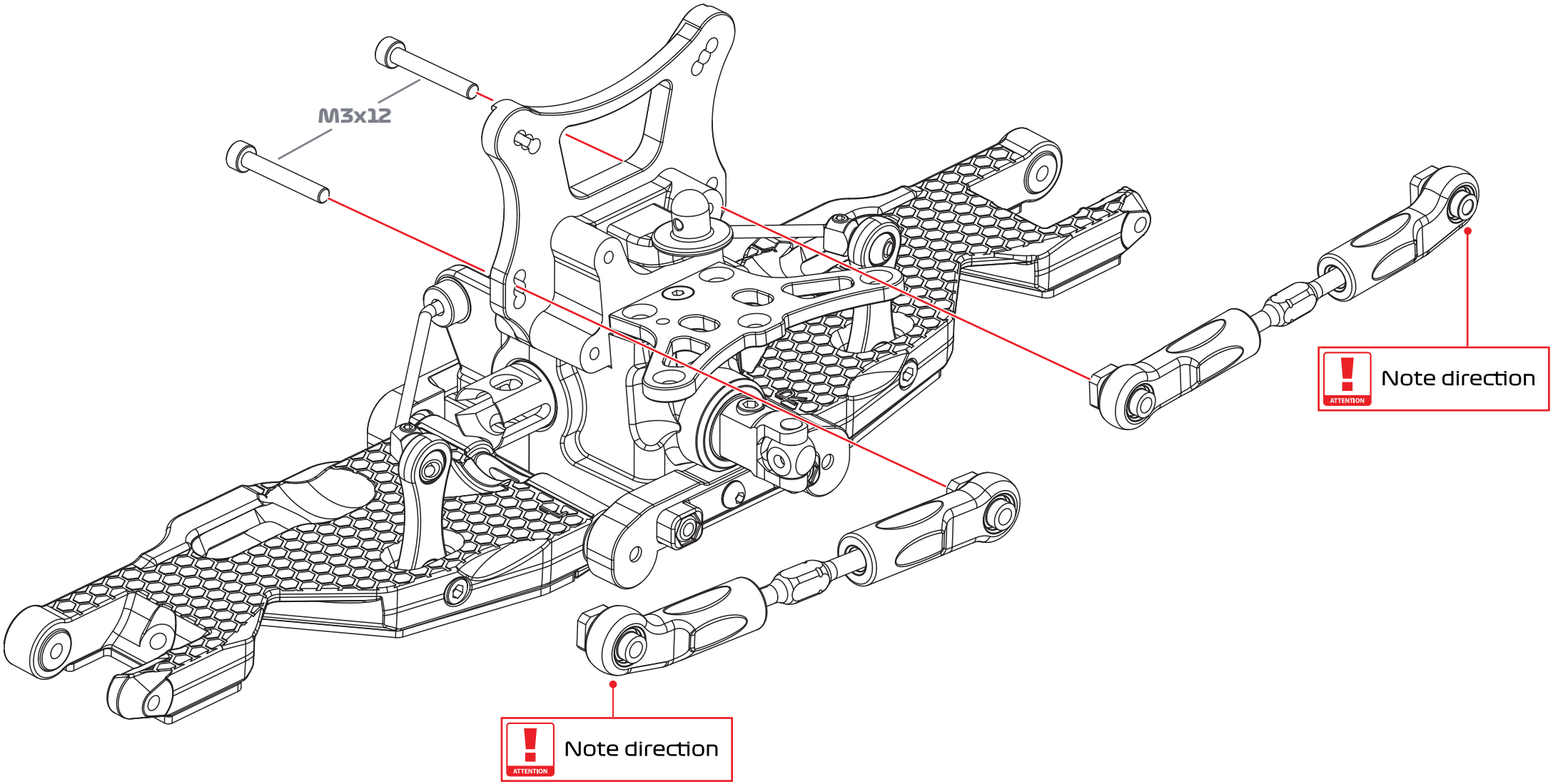
M3x12
Note direction
Note direction

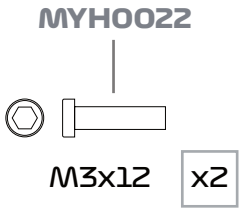
MYH0022
M3x12
x2

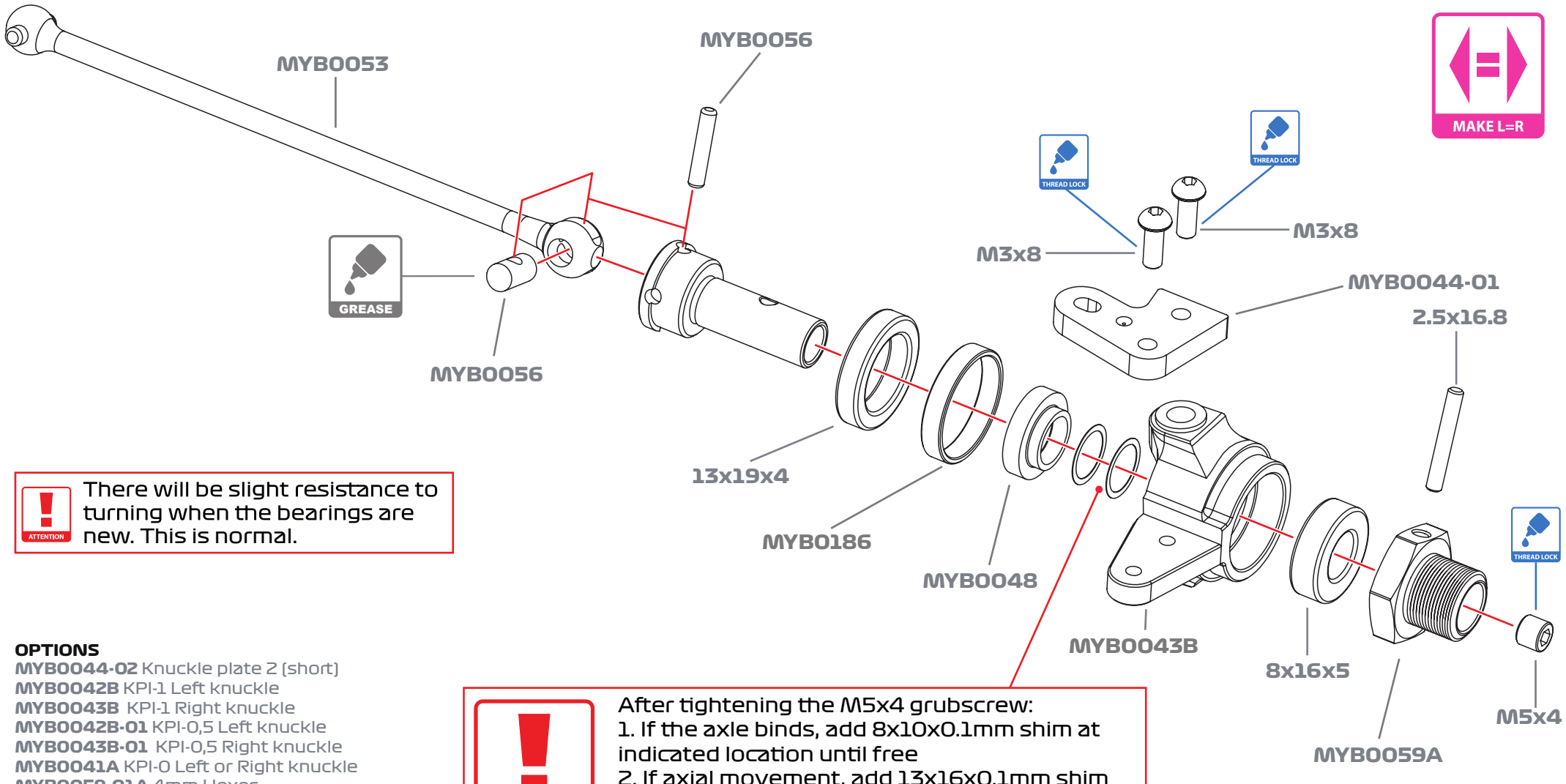

ATTENTION

There will be slight resistance to turning when the bearings are new. This is normal.

OPTIONS

MYB0044-02 Knuckle plate 2 (short)
MYB0042B KPI-1 Left knuckle
MYB0043B KPI-1 Right knuckle
MYB0042B-01 KPI-0,5 Left knuckle
MYB0043B-01 KPI-0,5 Right knuckle
MYB0041A KPI-0 Left or Right knuckle
MYB0059-01A 4mm Hexes
MYB0059-02A 6mm Hexes

ATTENTION

After tightening the M5x4 grubscrew:
1. If the axle binds, add 8x10x0.1mm shim at indicated location until free
2. If axial movement, add 13x16x0.1mm shim at the indicated location in the knuckle, behind the 8x16x5 bearing

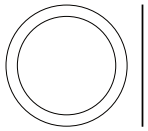

SHIM 13x16x0.1 x4

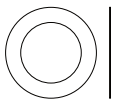

SHIM 8x10x0.1 x4

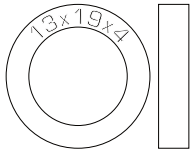

BEARING 13x19x4 x2

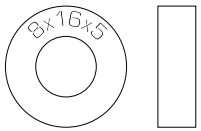

BEARING 8x16x5 x2

MYB0061

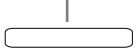

PIN 2.5x16.8 x2

MYH0005

M5x4 x2

MYH0029

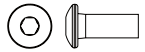

SCREW M3x8 x4

ATTENTION

MYB0045-01 preassembled. Ensure they are fully pressed into the knuckle

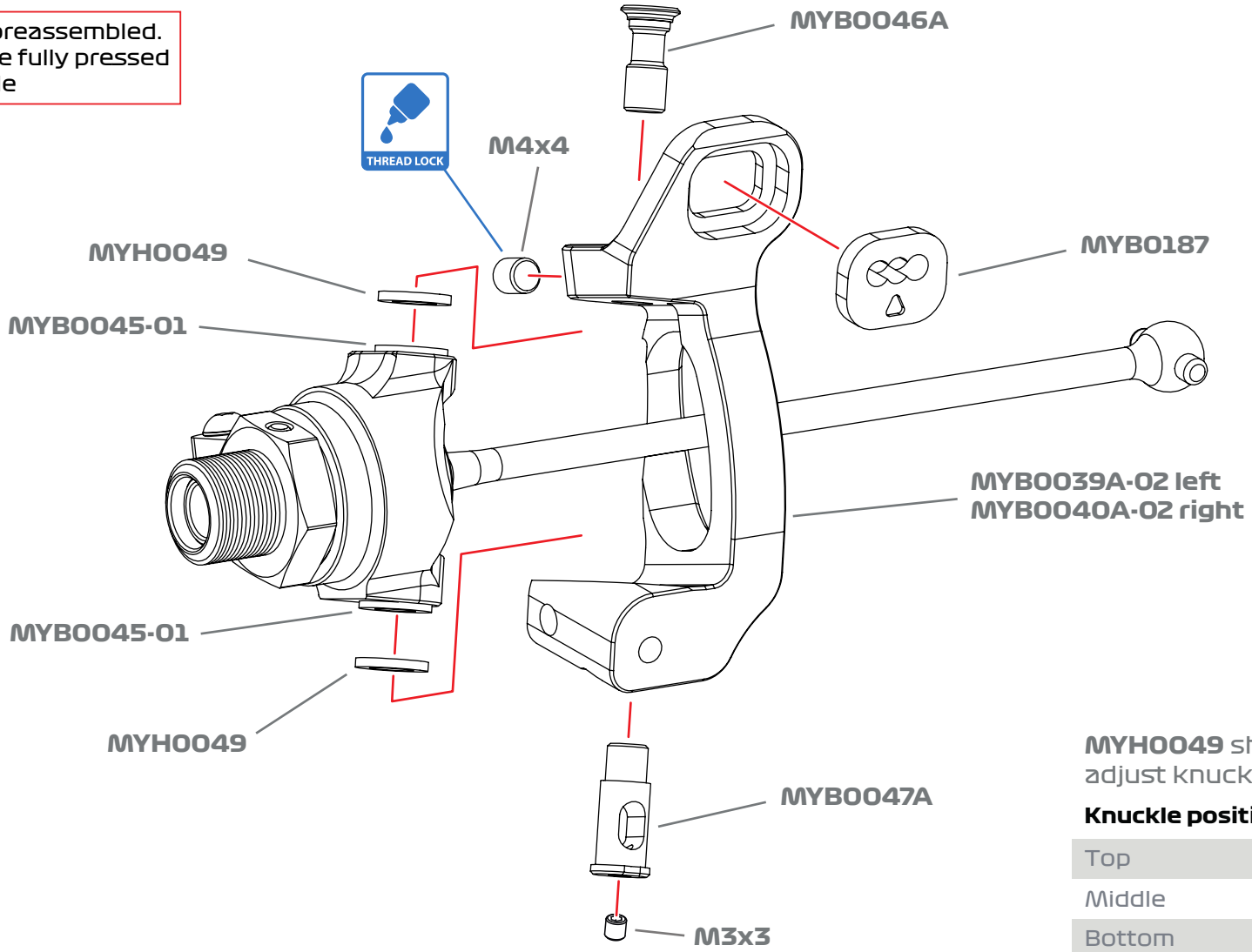

MYH0049 shim position used to adjust knuckle position

Knuckle position	King pins
Top	Short top, long bottom
Middle	Short top, short bottom
Bottom	Long top, short bottom

OPTIONS

MYB0039A-02 KPI-1 Caster 1 left
MYB0040A-02 KPI-1 Caster 1 right
MYB0039A-03 KPI-1 Caster 2 left
MYB040A-03 KPI-1 Caster 2 right
MYB0045A-01 Steel knuckle bushings

MYH0004

M4x4 x1

MYH0003

M3x3 x1

ATTENTION
Ensure hub rotates smoothly.
Do not overtighten M4x4
grub screw

ATTENTION
Note direction

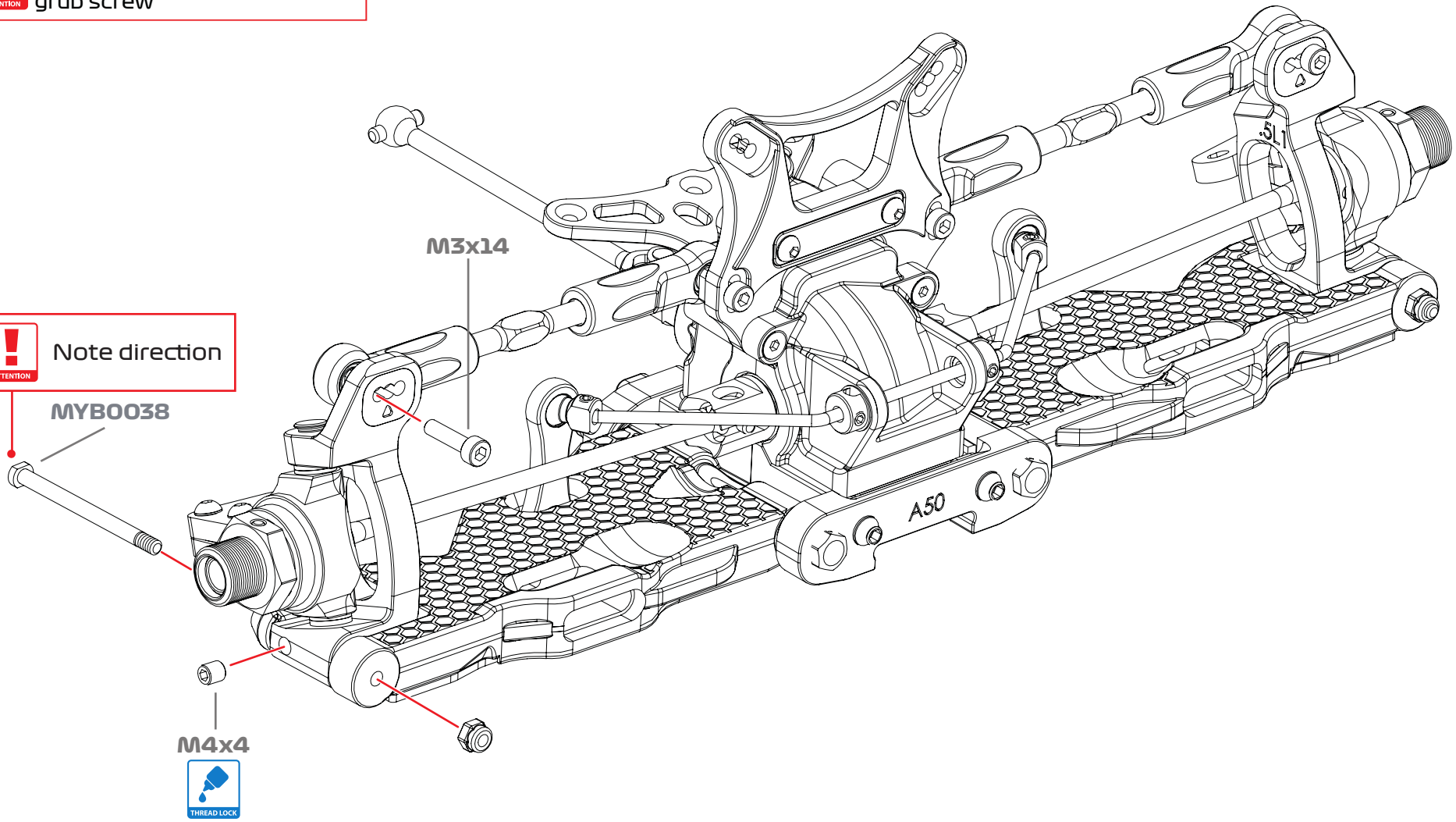

MYH0004
M4x4 x2

MYH0023
M3x14 x2

MYH0007
NYLOCK NUT M3 x2

ATTENTION
It may be easier to attach the shocks last. Assemble the parts on the tower now even if you attach the shocks later.

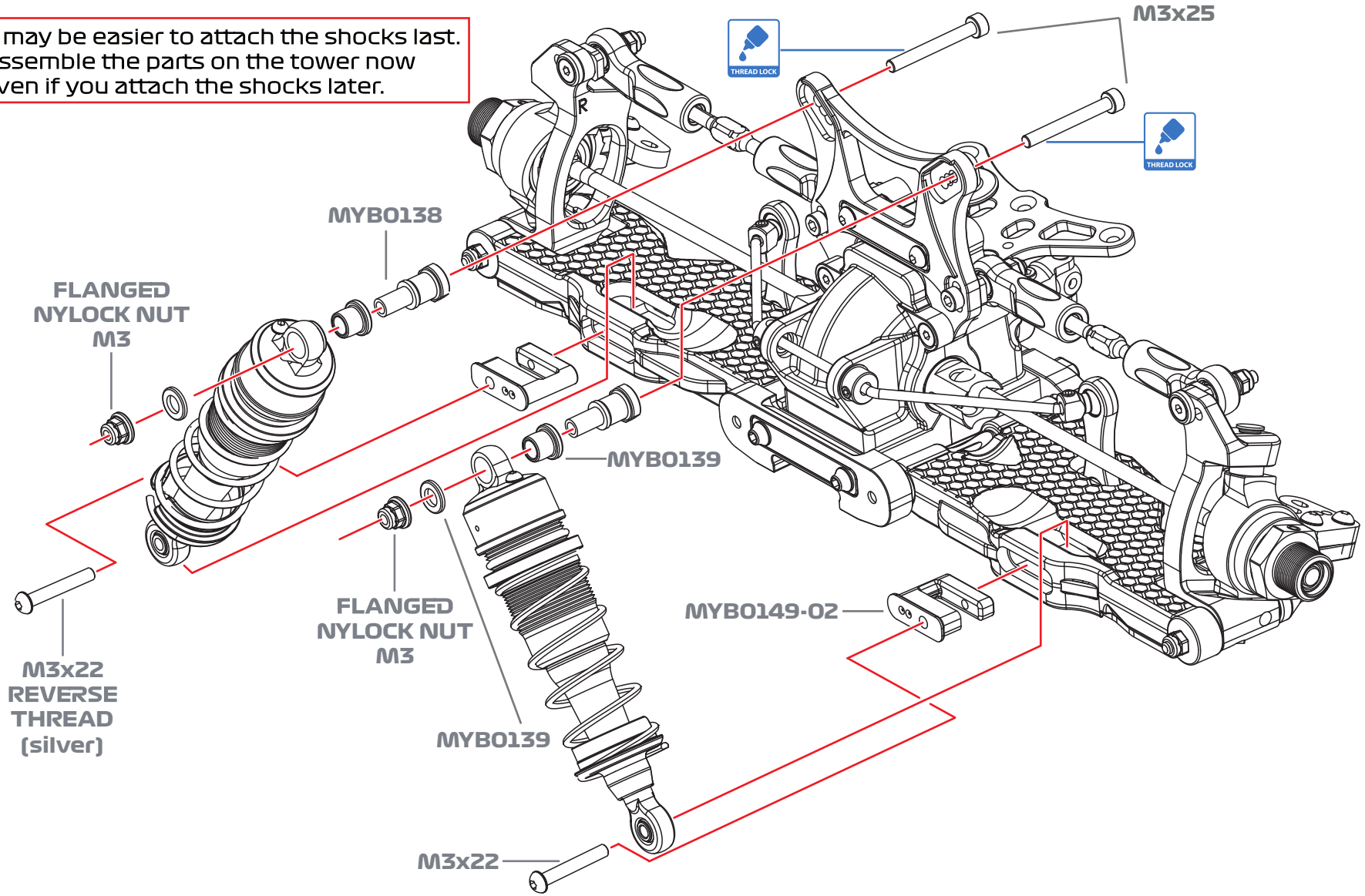

MYH0009

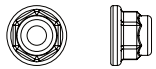

FLANGED NYLOCK NUT M3 x2

MYH0033

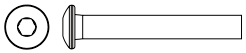

SCREW M3x22 x2

MYH0033

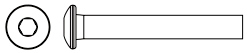

SCREW M3x22 REVERSE x2

ATTENTION
It is suggested to start with shocks mounted in the middle hole on the tower

ATTENTION
It is suggested to start with the outer hole on the outer link position. Ensure the arrow is pointing up

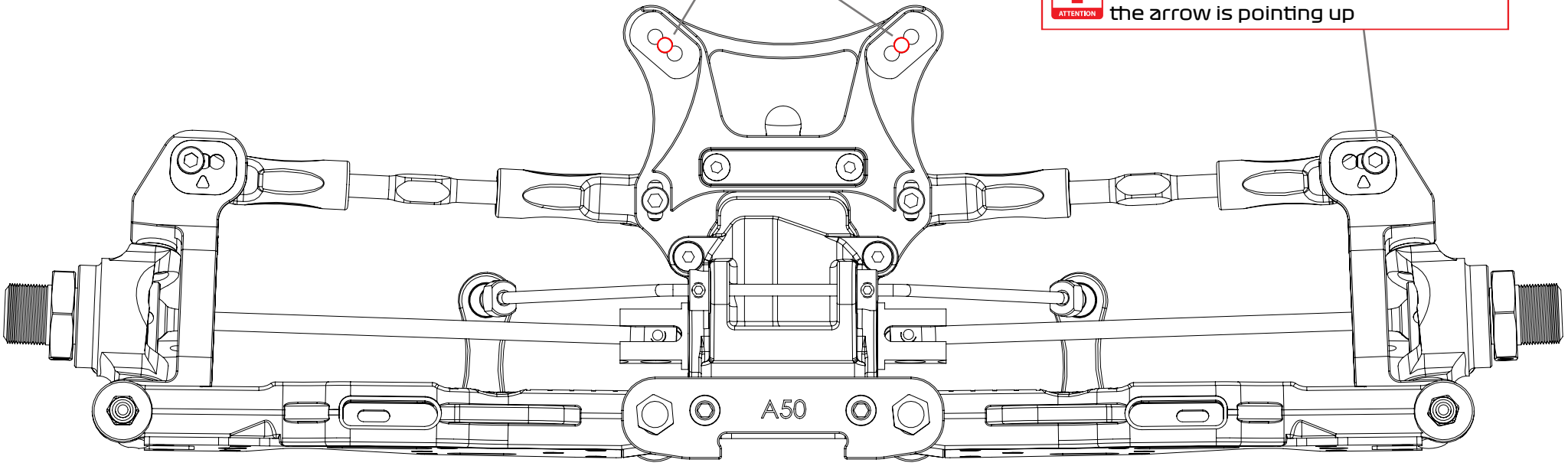

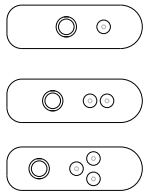

ATTENTION
SHORT VS LONG SHOCK BALL ENDS
Use short ball ends with 1 or 2 dots insert.
Use long ball ends with 2 or 3 dots insert.

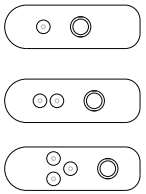

MYB0149-01

MYB0149-02

MYB0149-03

REAR END

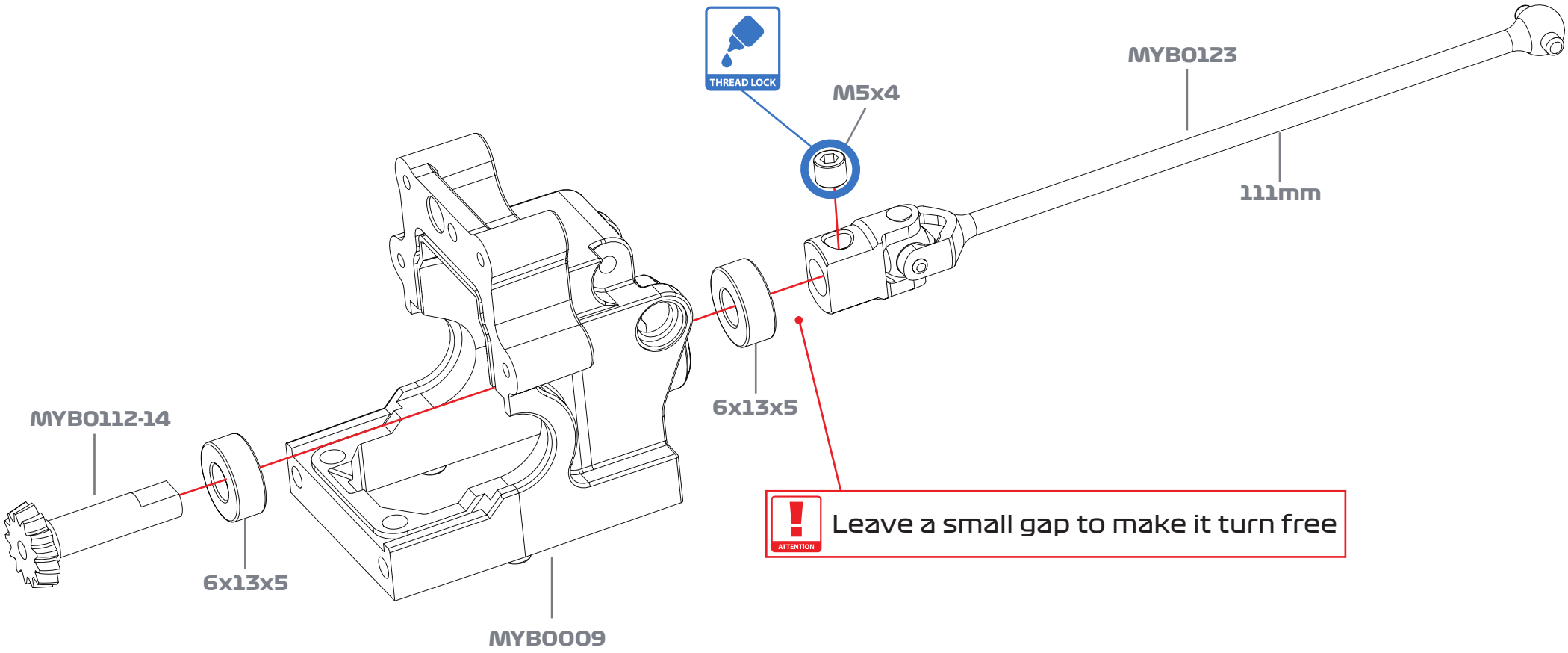

OPTIONS
MYB0112-13 13t
MYB0120 Dogbone outdrive
MYB0120-112 112mm dogbone
MY0120-116 116mm dogbone
MYB0166MXP MXP Bearings

MYB0166

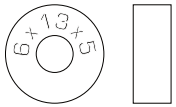

BEARING 6x13x5 x2

MYH0005

M5x4 x1

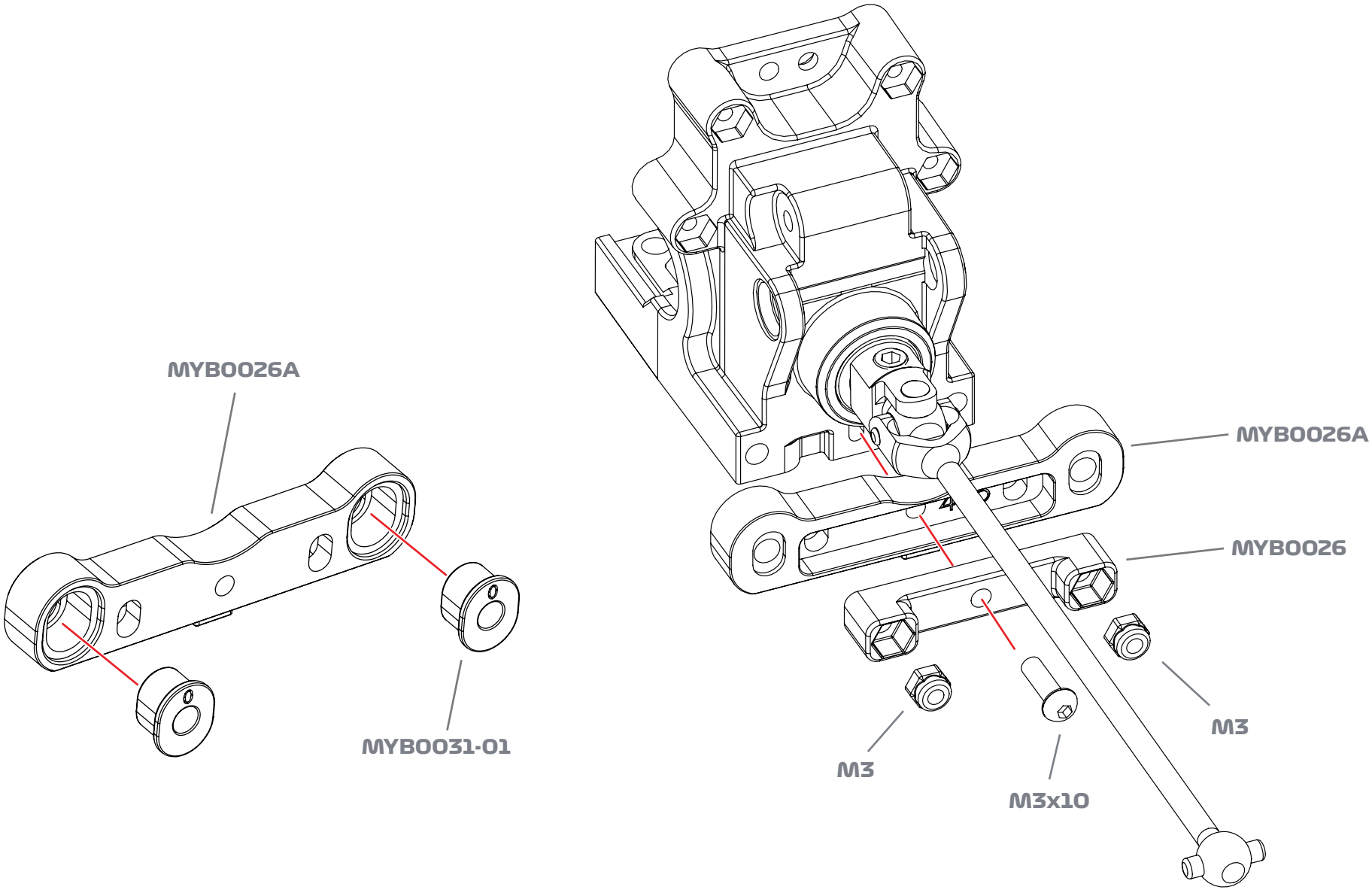

OPTIONS
MYB0029-01A C-Block 50 (for 1.5deg toe)
MYB0029-02A C-Block 51 (for 0.5deg toe)
MYB0026-01 High or low spacer set

MYH0030

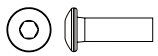

SCREW M3x10 x1

MYB0007

NYLOCK NUT M3 x2

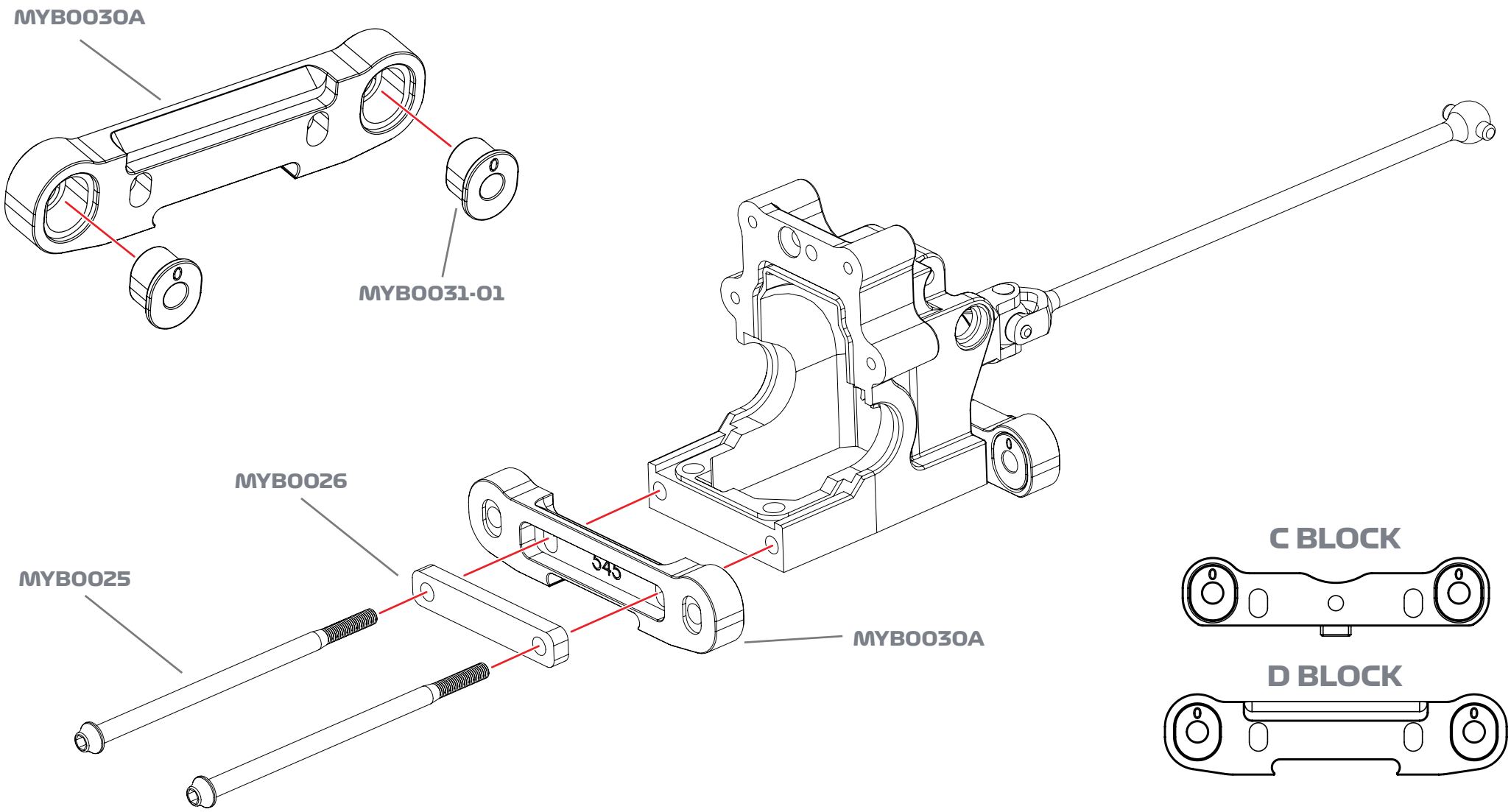

OPTIONS
MYB0025TI TI Gearbox screws
MYB0026-01 High or low spacer set
MYB0026CF CF Spacer set
MYB0030-01 D-block 53 (for 1.5deg toe)
MYB0030-02 D-block 52 (for 0.5deg toe)

ASSEMBLY NOTE
Insert driver from bottom of arm to thread droop screw

ATTENTION

MAKE L=R

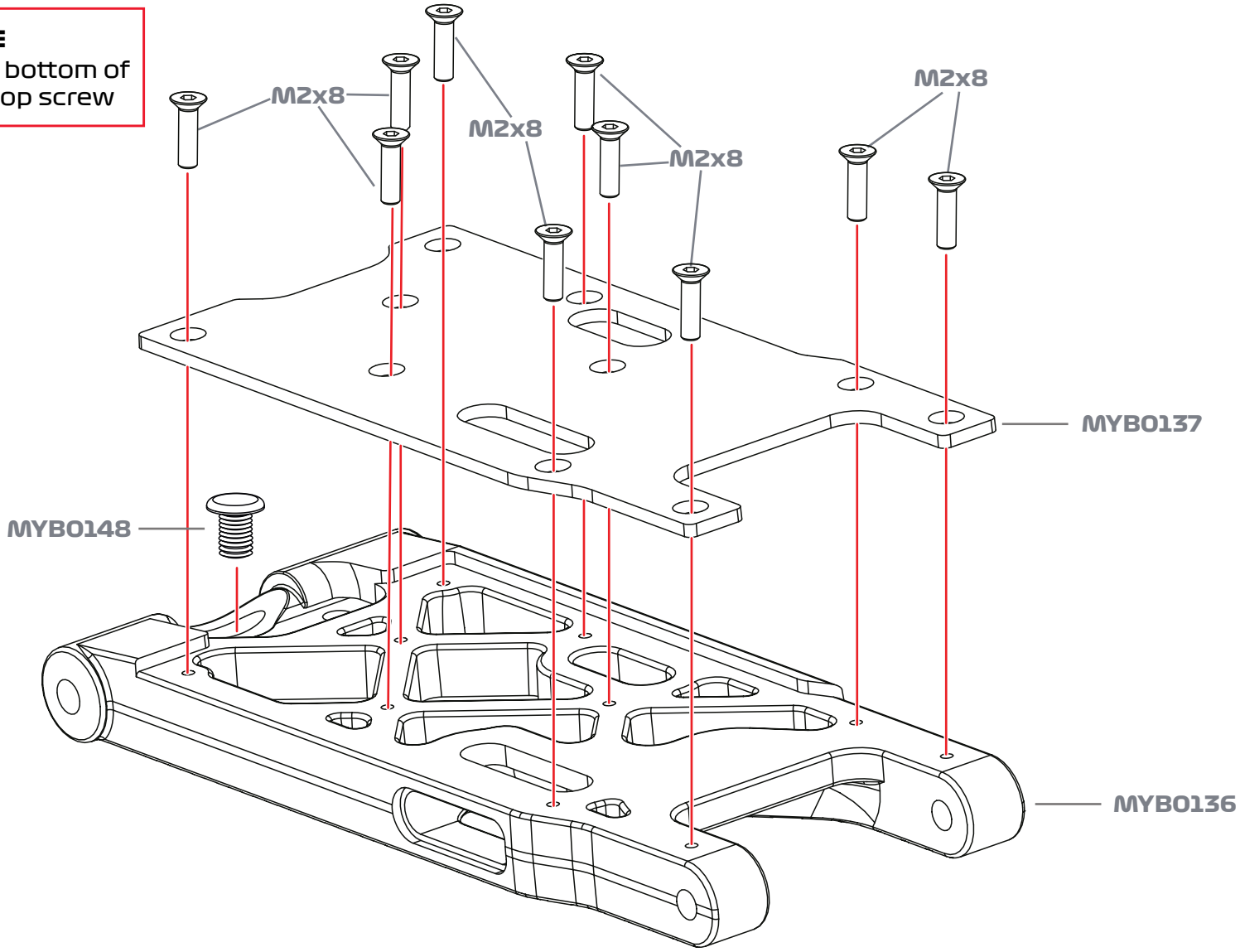

OPTIONS
MYB0037CF CF braces

MYH0010

SCREW M2x8 x20

M4

M4

MYB0032-02

MYB0032-02

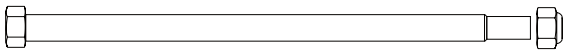

SCREW TYPE HINGE PIN AND M4 NUT x2

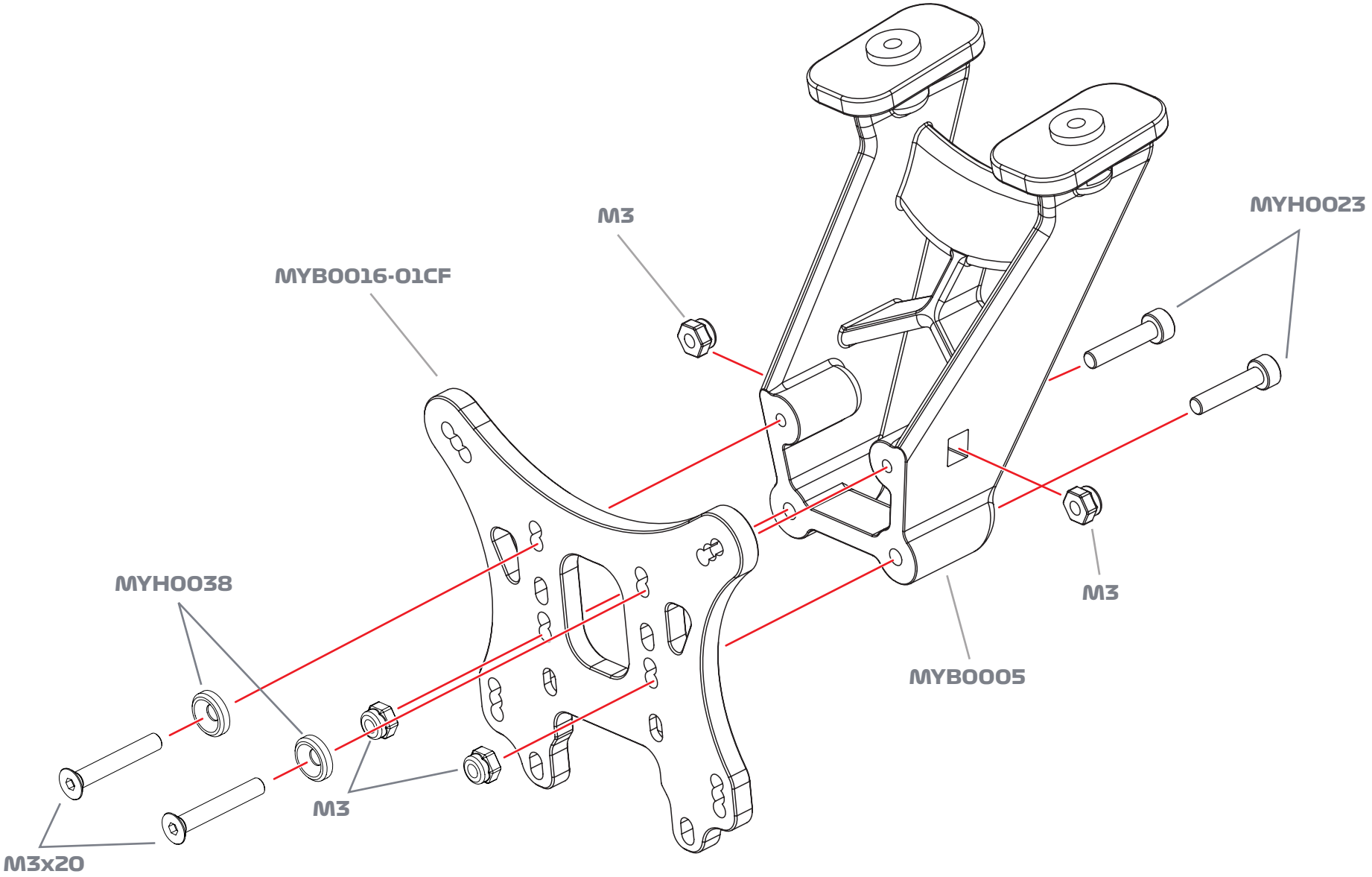

OPTIONS
MYB0016CF CF Rear tower
MYB0016-01CF CF Long link tower

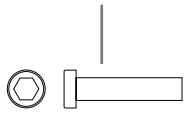

M3x14 x2

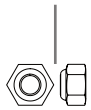

NYLOCK NUT M3 x4

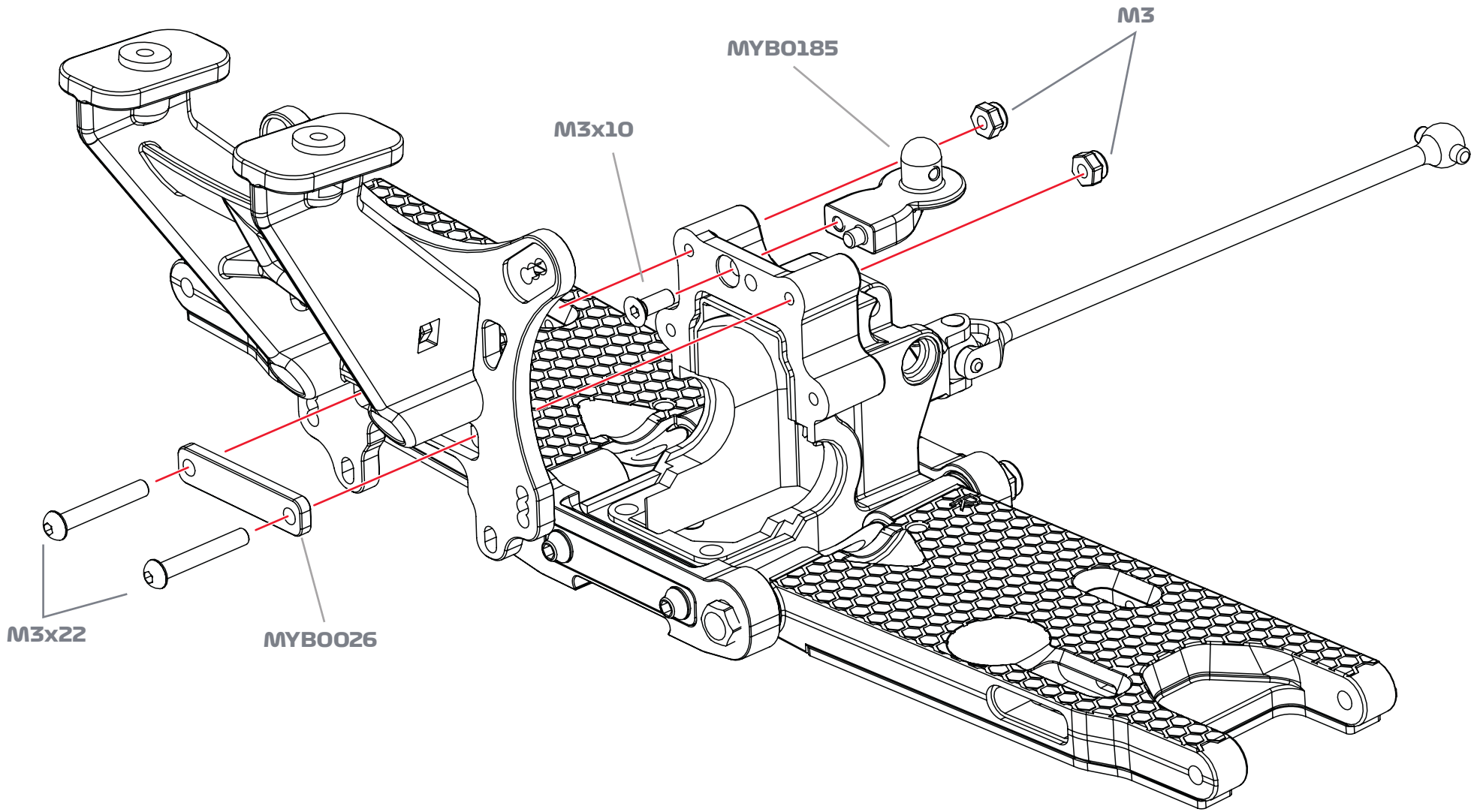

OPTIONS
MYB0026-01 High or Low Spacer Set
MYB0026CF CF Spacer Set

MYH0013

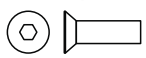

SCREW M3x10 x1

MYH0007

NYLOCK NUT M3 x2

MYH0033

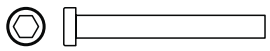

SCREW M3x22 x2

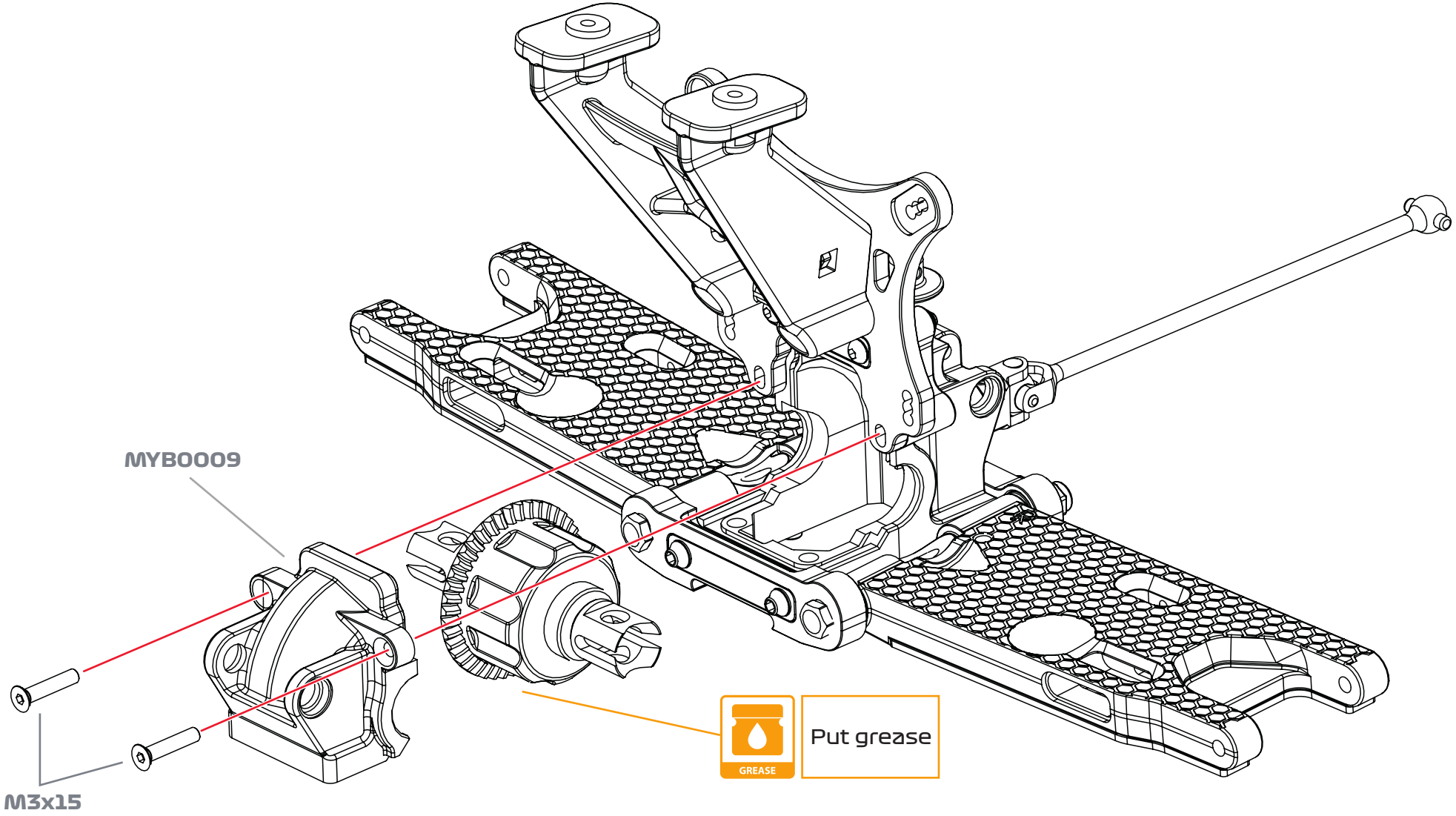
MYB0009
M3x15
GREASE
Put grease

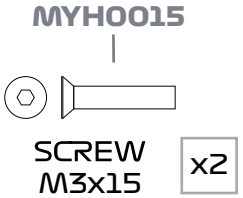
MYH0015
SCREW
M3x15
x2

NOTE
Do not overtighten on M3x3 grub screws

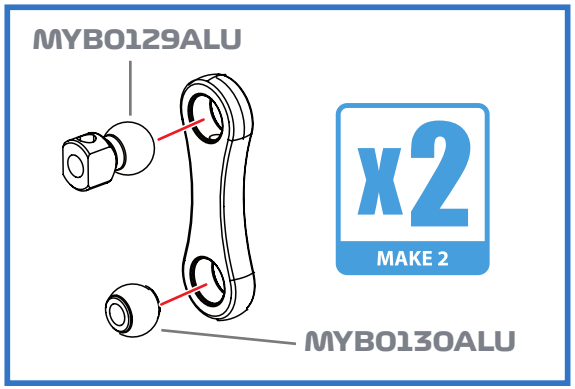

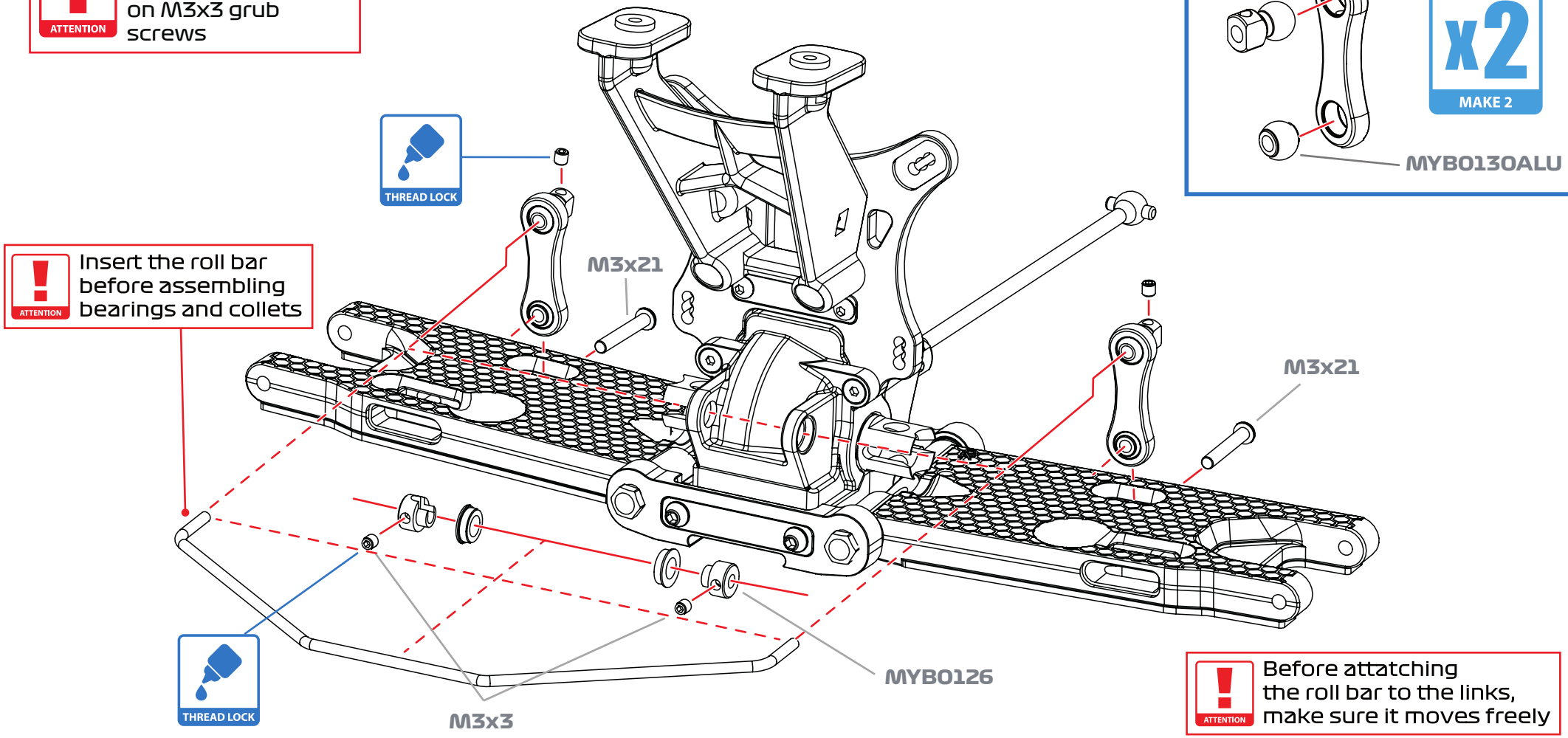

Insert the roll bar before assembling bearings and collets

Before attatching the roll bar to the links, make sure it moves freely

OPTIONS

MYB0127-01 Adjustable roll links
MYB0128 Link turnbuckle screw
MYB0125-24 2,4mm Rear Anti-roll bar
MYB0125-25 2,5mm Rear Anti-roll bar
MYB0125-26 2,6mm Rear Anti-roll bar
MYB0125-27 2,7mm Rear Anti-roll bar

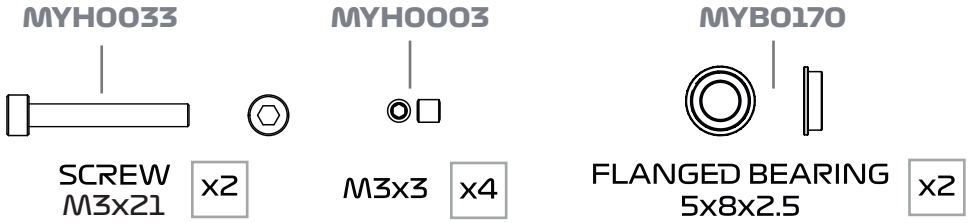

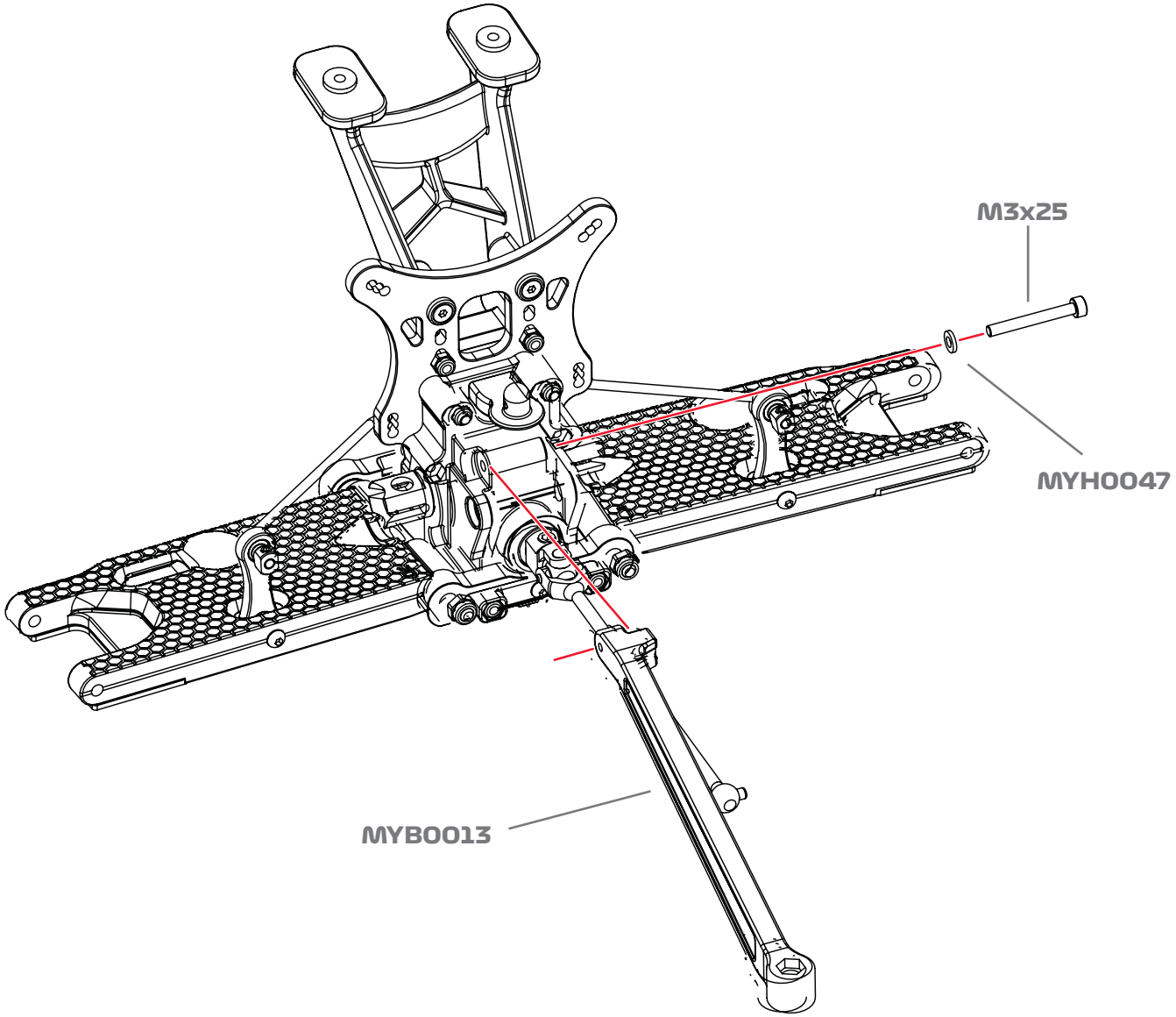

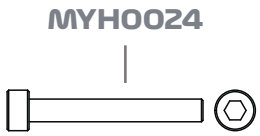

SCREW M3x25 x1

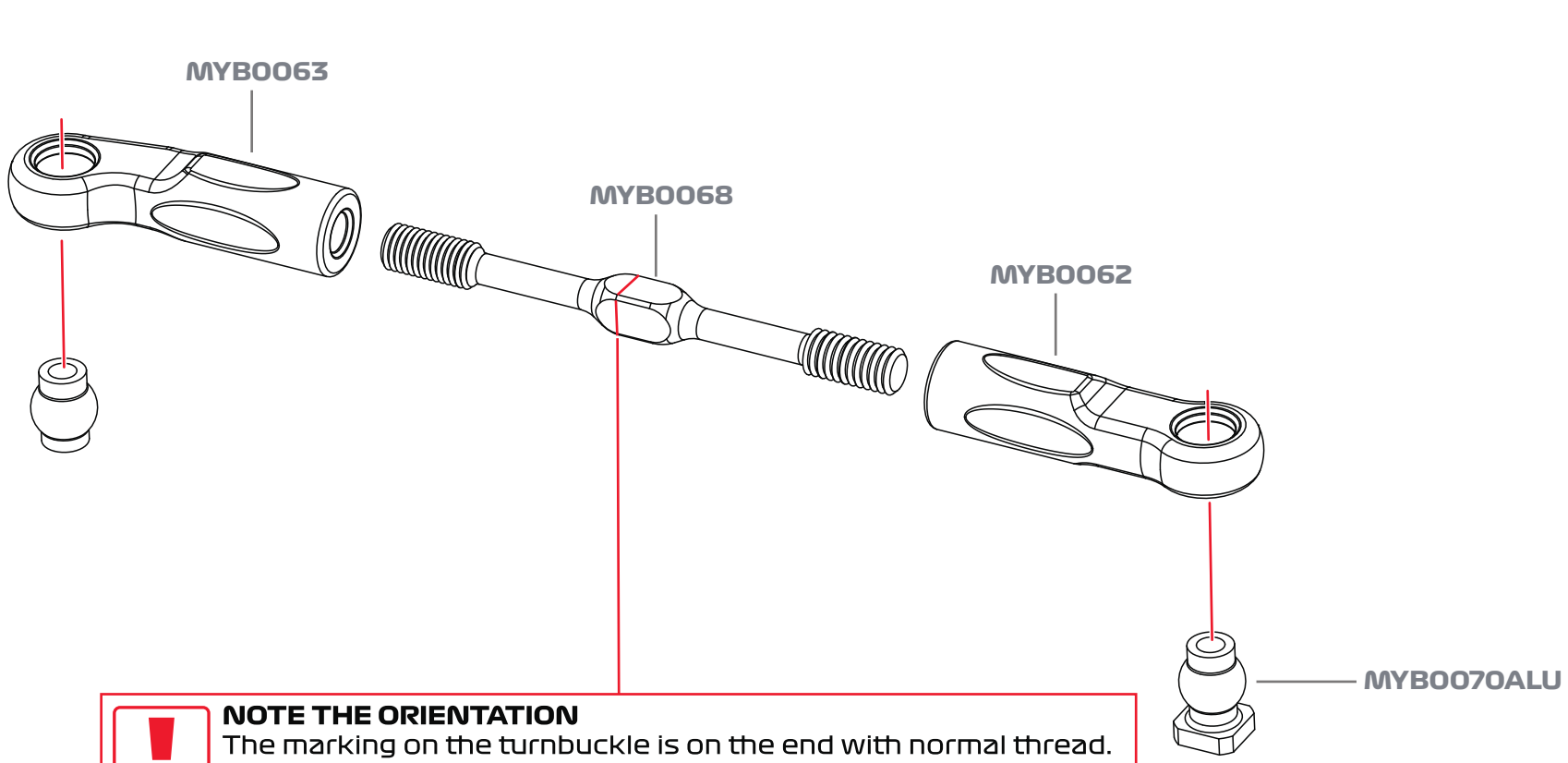

NOTE THE ORIENTATION
The marking on the turnbuckle is on the end with normal thread. Place themall on the same side so you adjust all turnbuckles in the same direction.

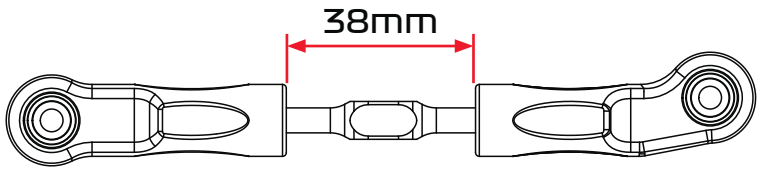

OPTION
MYB0068TI TI Turnbuckle

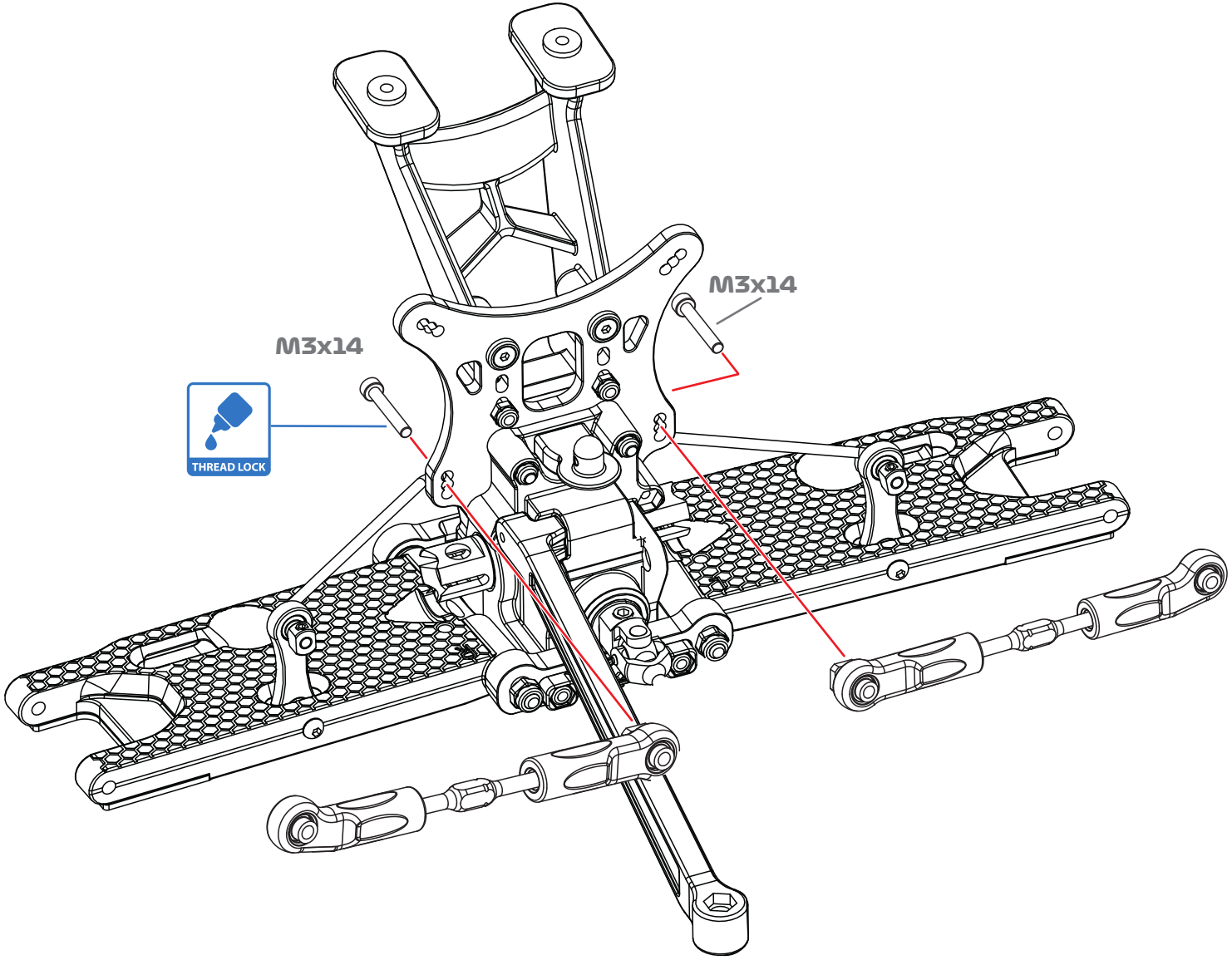

MYH0023

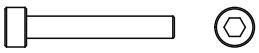

SCREW
M3x14

x2

NOTE
Standard position of the wing is using the 3rd hole from the front

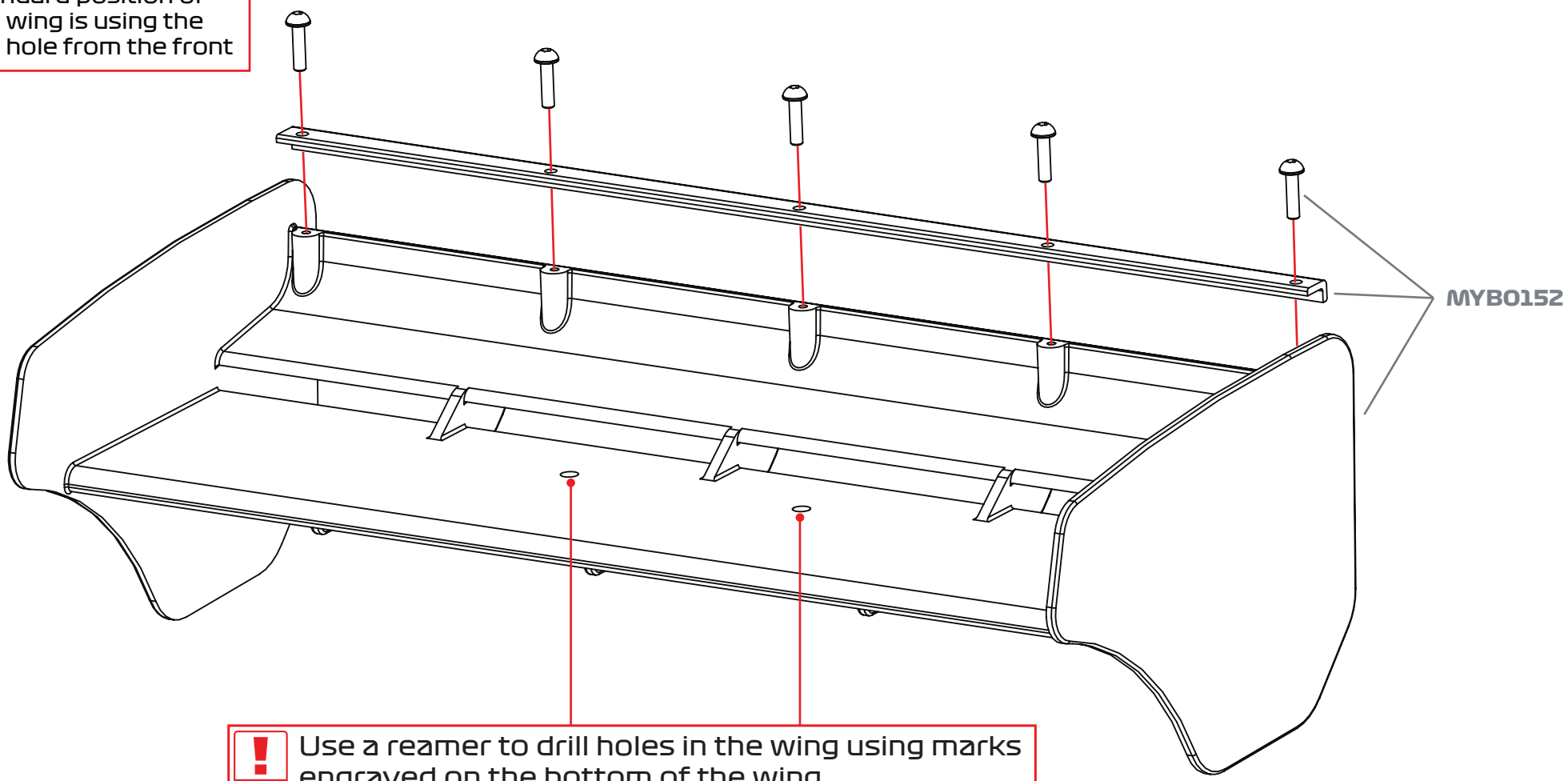

Use a reamer to drill holes in the wing using marks engraved on the bottom of the wing.

OPTION
MYB0152-01 Wing 2,0

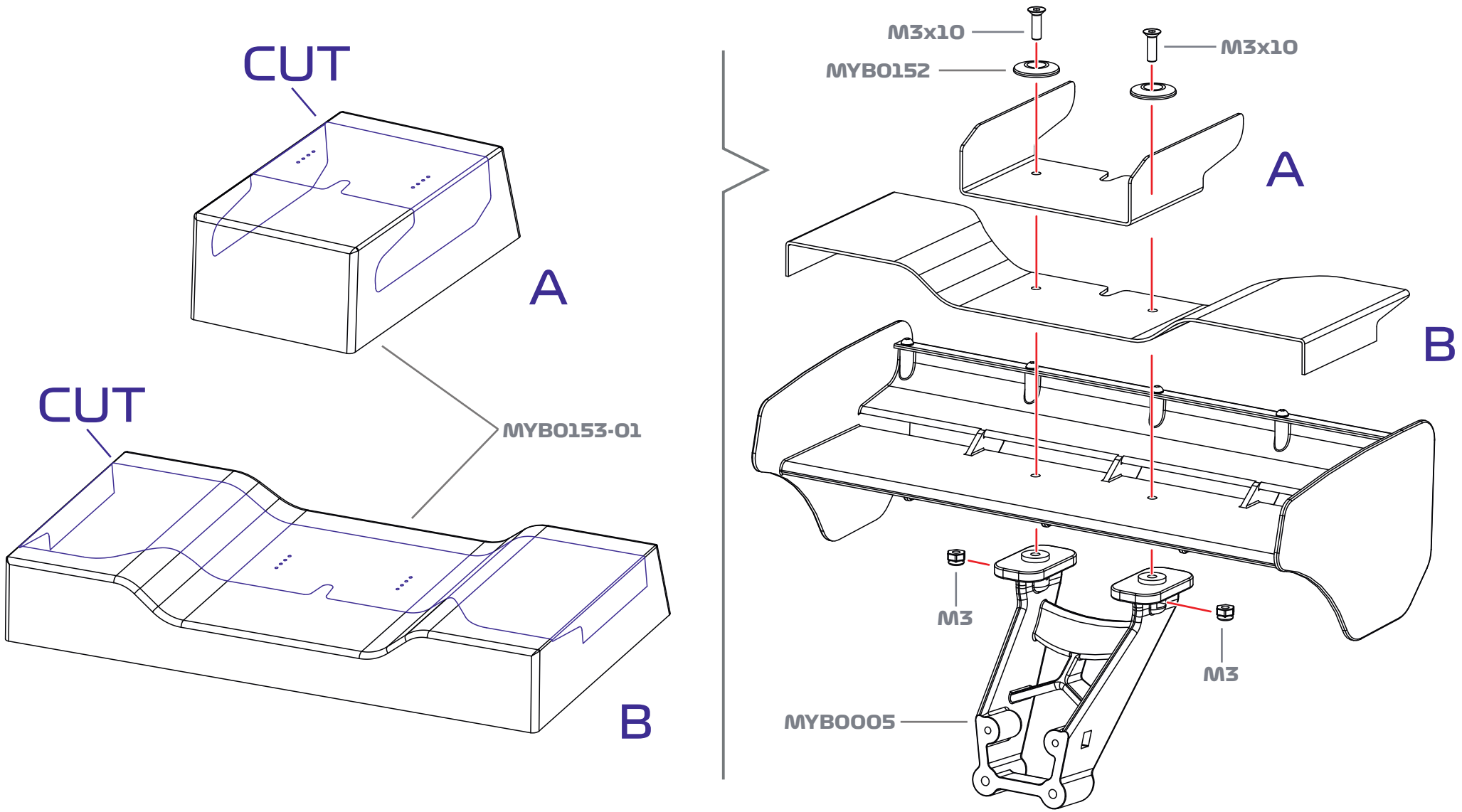

MYH0013

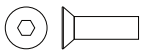

SCREW M3x10 x2

MYH0007

NYLOCK NUT M3 x2

MAKE L=R

MYB0052

MYB0048-02

MYB0048

MYB0061

2.5x16.8

8x16x5

M5x4

8x16x5

MYB0050

MYB0048-02

MYB0059A

THREAD LOCK

ATTENTION

There will be slight resistance to turning when the bearings are new. This is normal.

OPTIONS

MYB0052-01 94mm universals
MYB0058 CVD shafts kit 100mm
MYB0048-01 CVD Rear crushwasher
MYB0059-01A 4mm Hexes
MYB0059-02A 6mm Hexes
MYB0050-01 Alu rear hub
MYB0050-02 Inserts for rear hub

MYB0167

8x16x5

BEARING 8x16x5 x2

MYH0005

M5x4 x1

ATTENTION

Ensure hub rotates smoothly.
Do not overtighten M4x4 grub screw or M3 nut

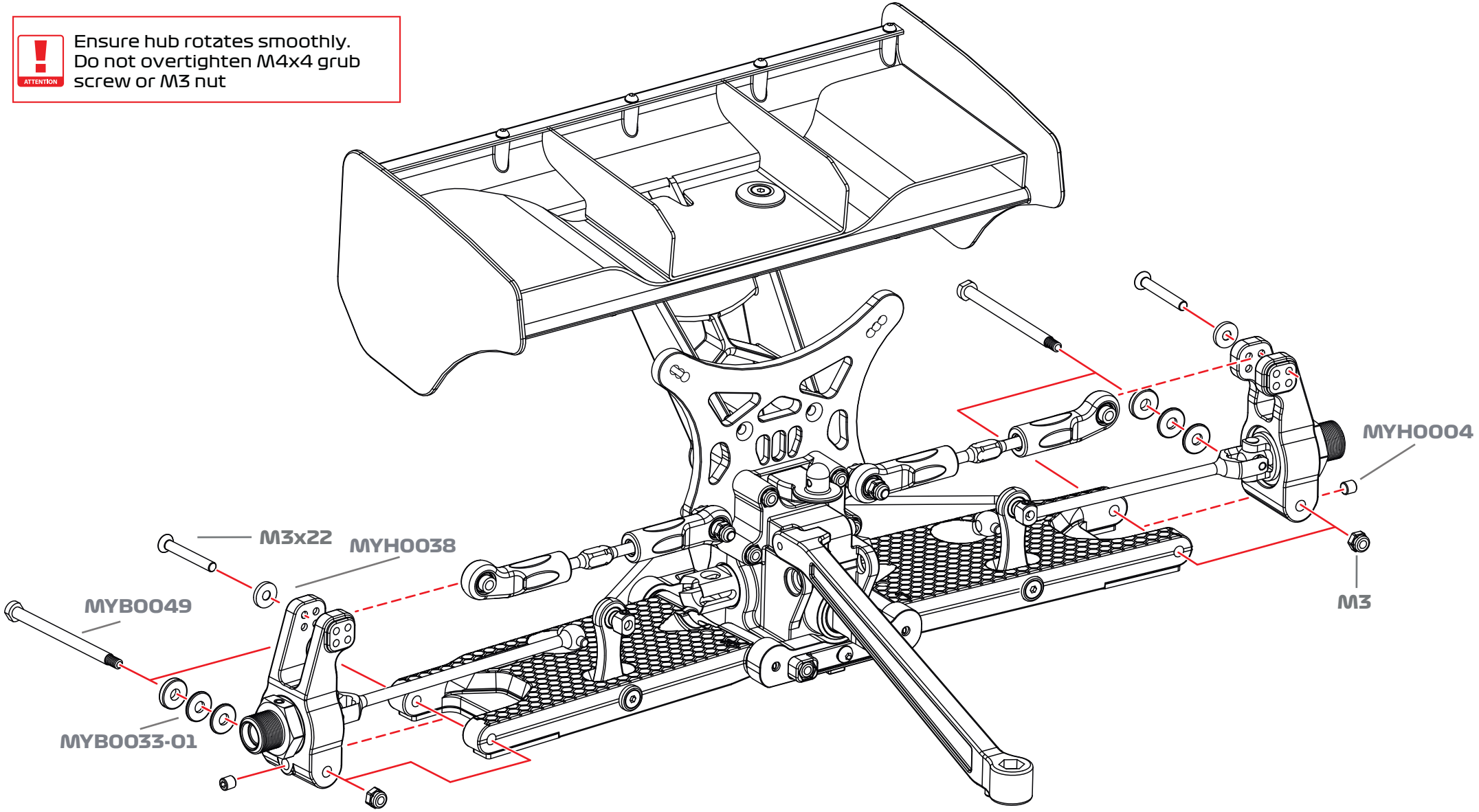

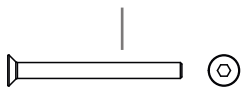

SCREW M3x22 x2

NYLOCK NUT M3 x2

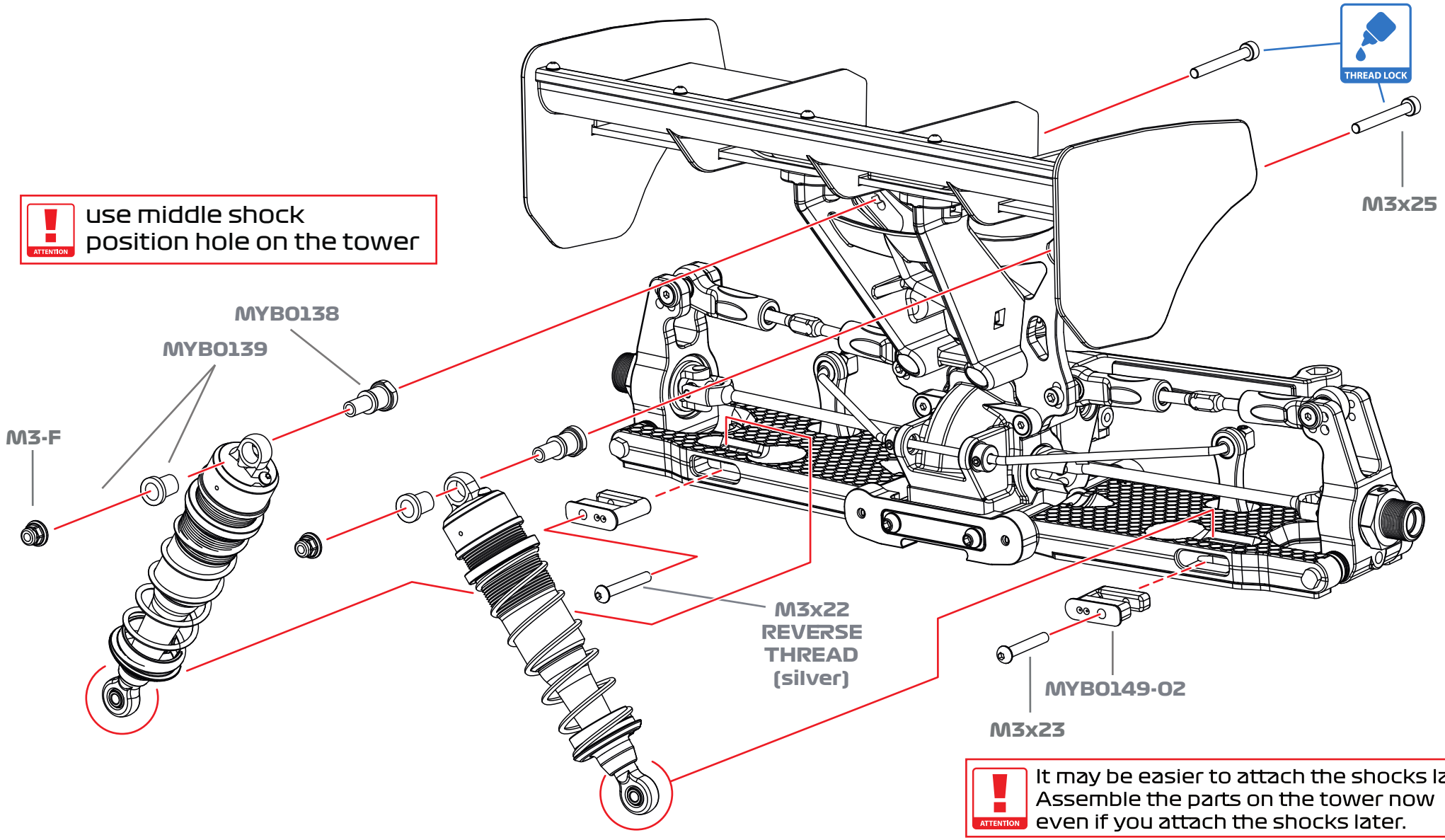
THREAD LOCK
M3x25
ATTENTION
use middle shock position hole on the tower
MYB0138
MYB0139
M3-F
M3x22 REVERSE THREAD (silver)
MYB0149-02
M3x23
ATTENTION
It may be easier to attach the shocks last. Assemble the parts on the tower now even if you attach the shocks later.

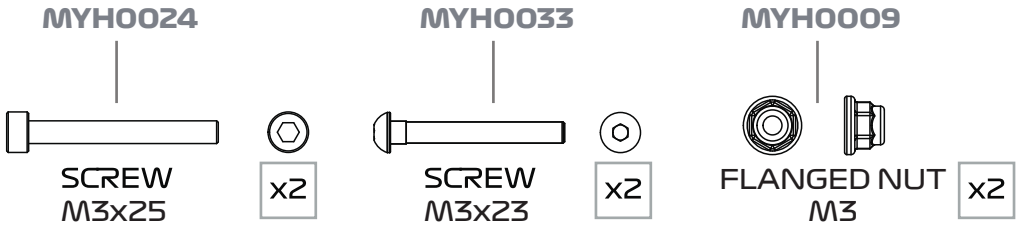
MYH0024
SCREW M3x25
x2
MYH0033
SCREW M3x23
x2
MYH0009
FLANGED NUT M3
x2

CENTRE SECTION

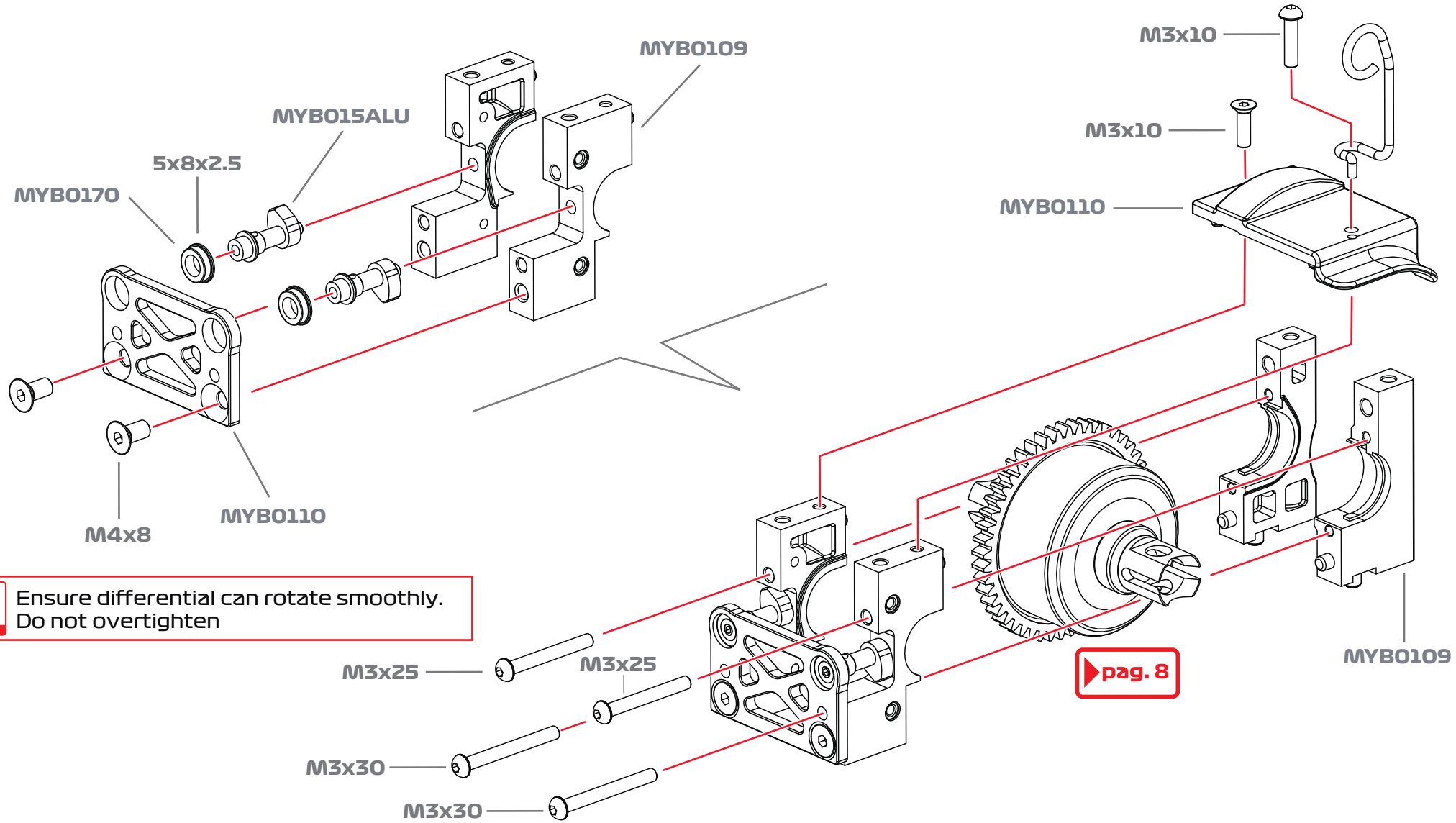

ATTENTION
Ensure differential can rotate smoothly.
Do not overtighten

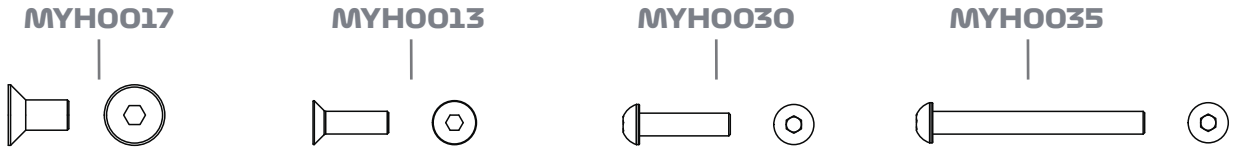

SCREW M4x8 x2	SCREW M3x10 x1	SCREW M3x10 x1	SCREW M3x25 x2

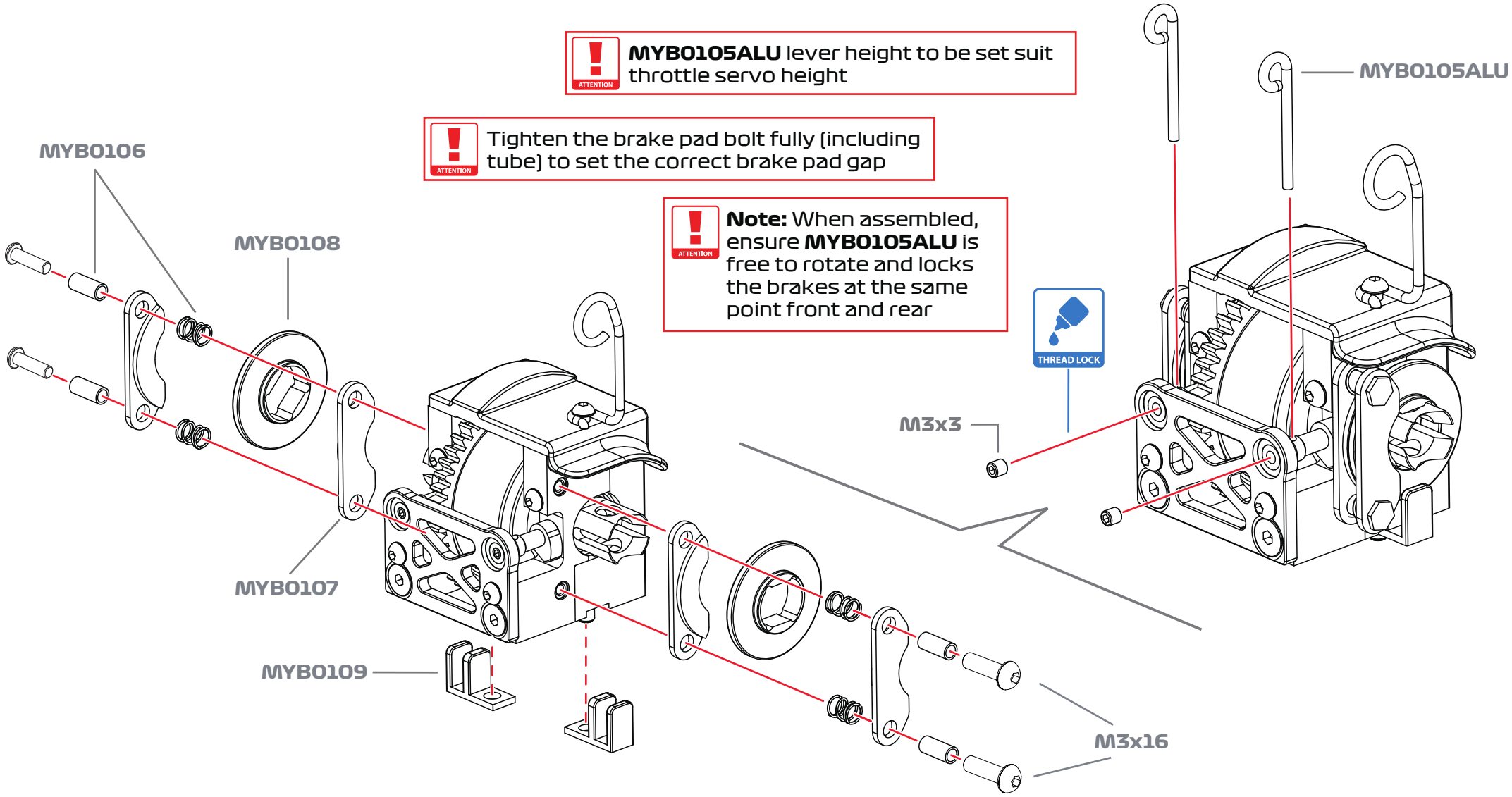
MYB0105ALU lever height to be set suit throttle servo height
ATTENTION
Tighten the brake pad bolt fully (including tube) to set the correct brake pad gap
ATTENTION
Note: When assembled, ensure MYB0105ALU is free to rotate and locks the brakes at the same point front and rear
ATTENTION
THREAD LOCK
MYB0105ALU
MYB0106
MYB0108
M3x3
MYB0107
MYB0109
M3x16


MYH0003
M3x3
x2
MYH0028
SCREW M3x6
x4
MYH0032
SCREW M3x16
x4

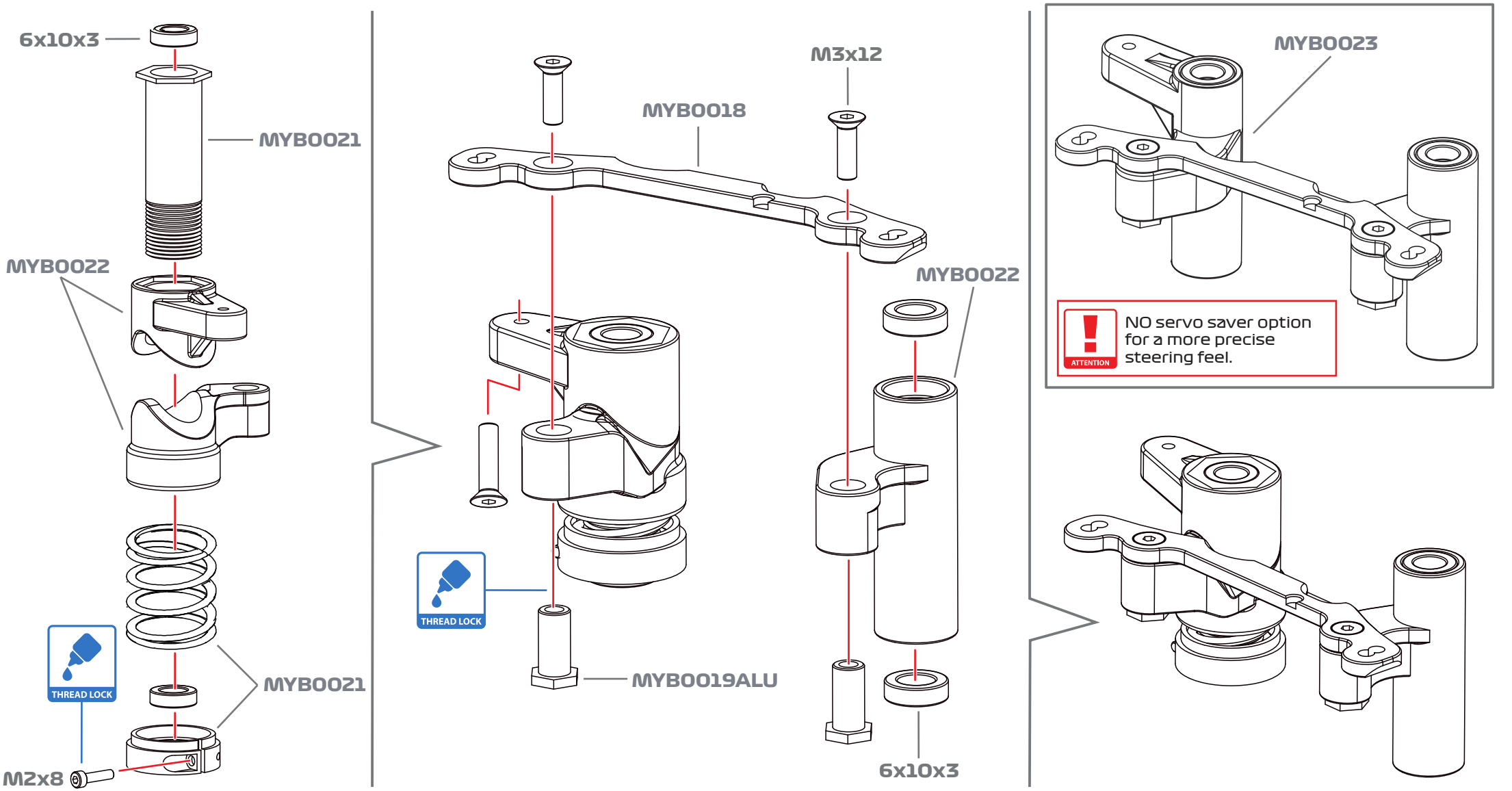

Note: With a high torque, metal case steering servo, most drivers use the no servo saver option. To run the servo saver with screw type hingepin. fully tighten and back off the nut ½ turn giving a measurement of 4.4mm from end of thread to nut underside.

MYH0015	MYB0025	MYH0014	MYB0069
SCREW M3x15 x1	SCREW M2x8 x1	SCREW M3x12 x1	BEARING 6x10x3 x4

STEP 14

BAG K - Chassis assembly

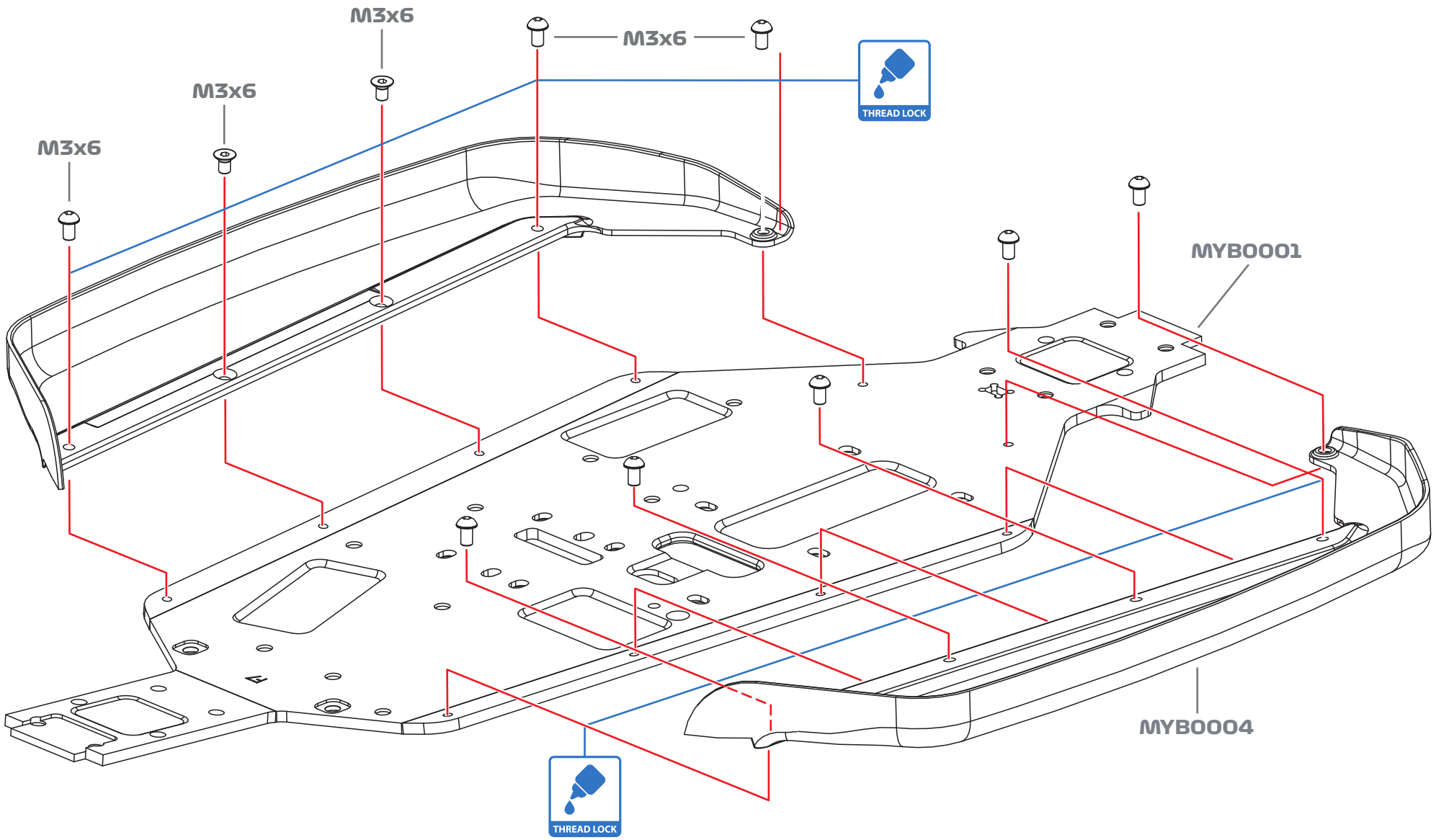

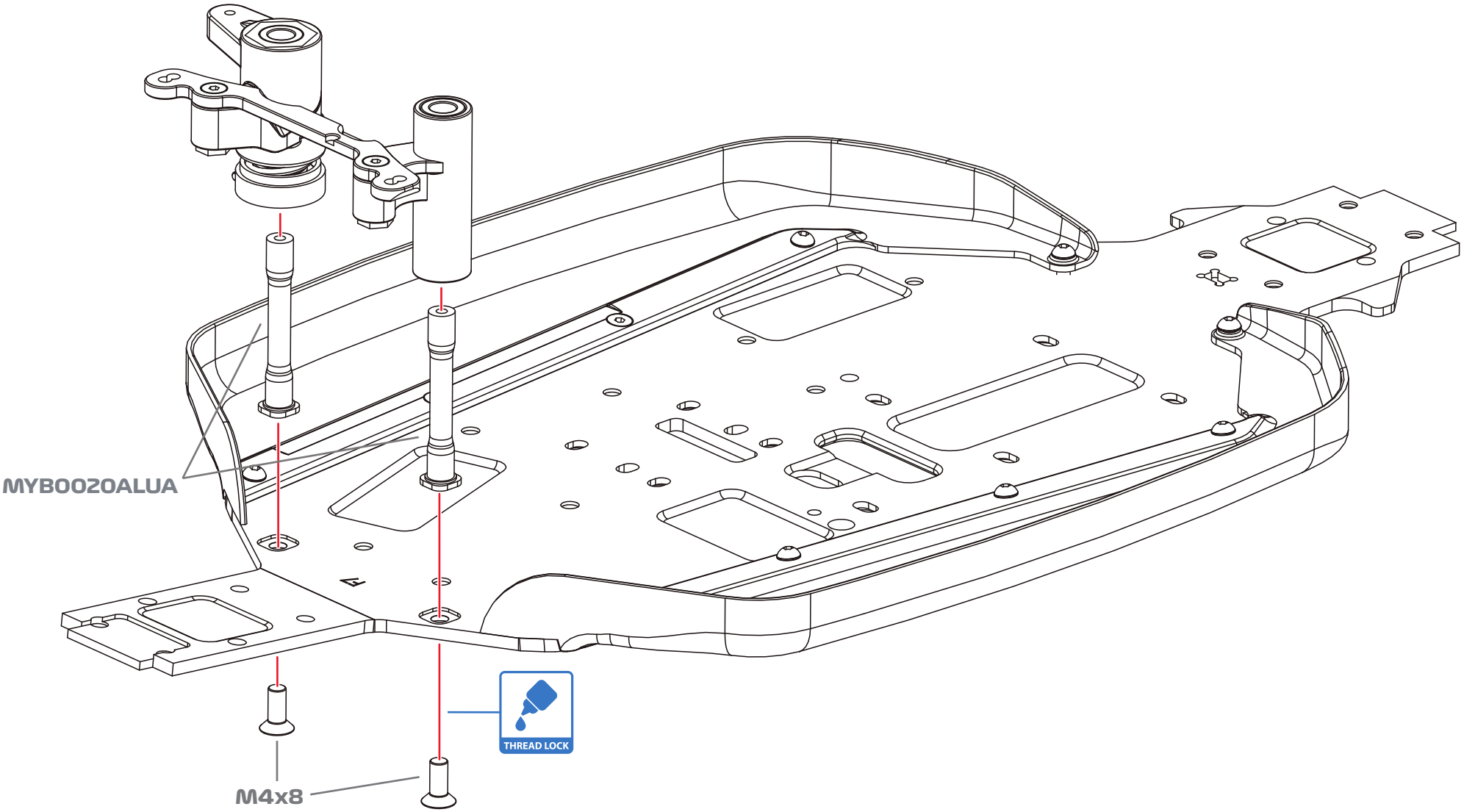
MYB0020ALUA
THREAD LOCK
M4x8


MYH0017
SCREW
M4x8
x2

ATTENTION

MYB0014-01 is provided at 3 thicknesses.
This must be adjusted along with MYB0010 to set rear diff height

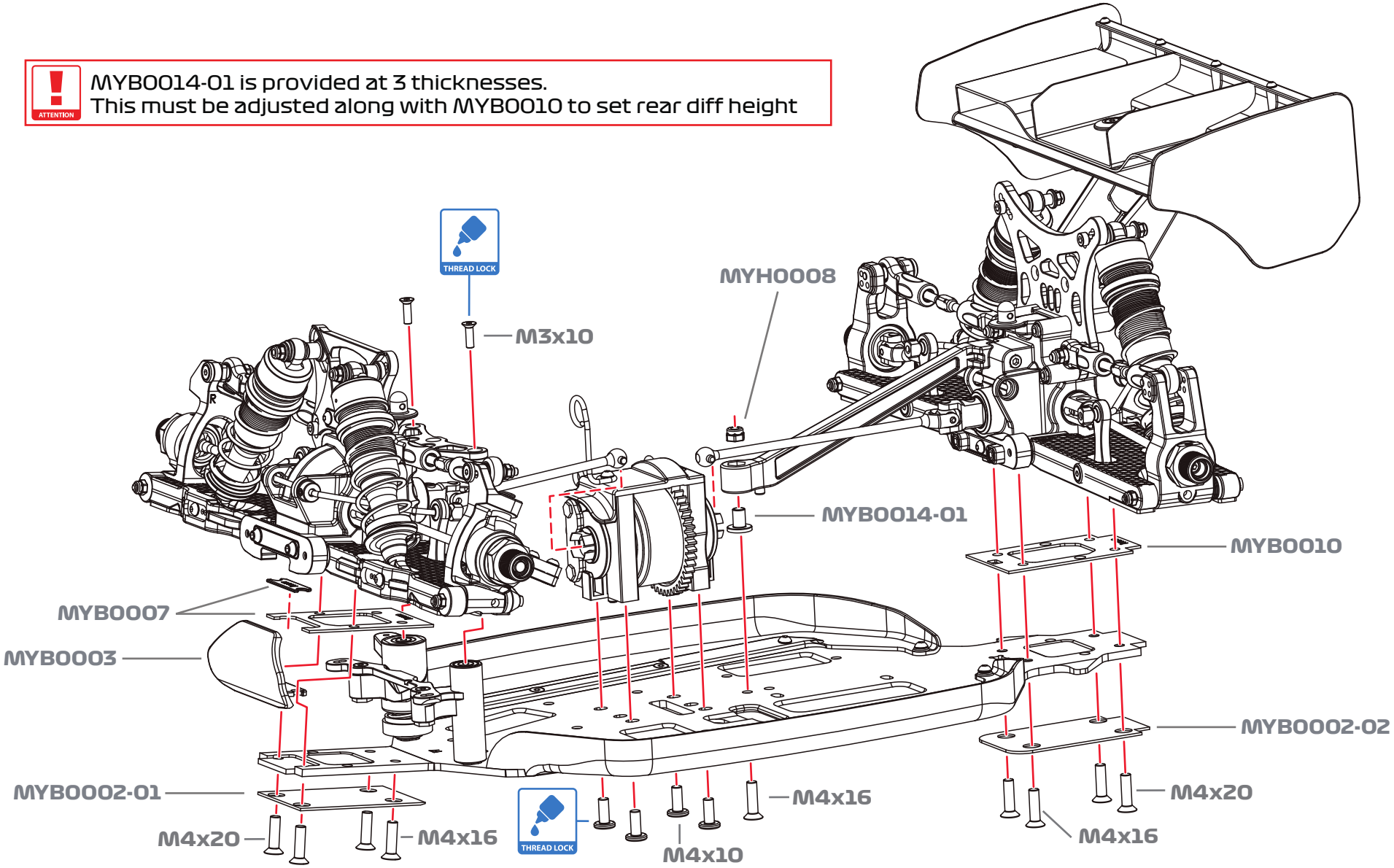

OPTIONS
MYB0014 0mm spacer for chassi braces
MYB0014-01 1mm spacer for chassi braces
MYB0014-02 2mm spacer for chassi braces
MYB0011 2mm spacer for rear gearbox
MYB0008 2mm spacer for front gearbox

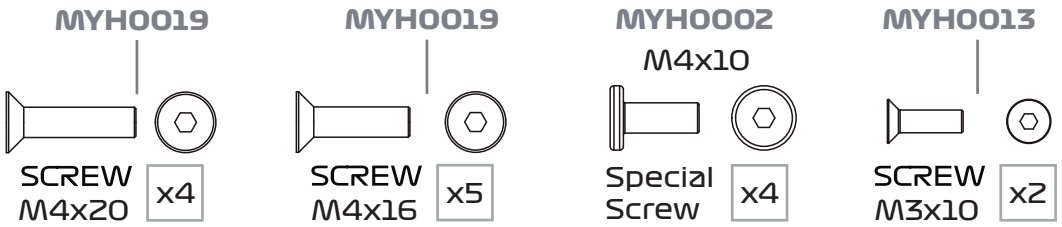

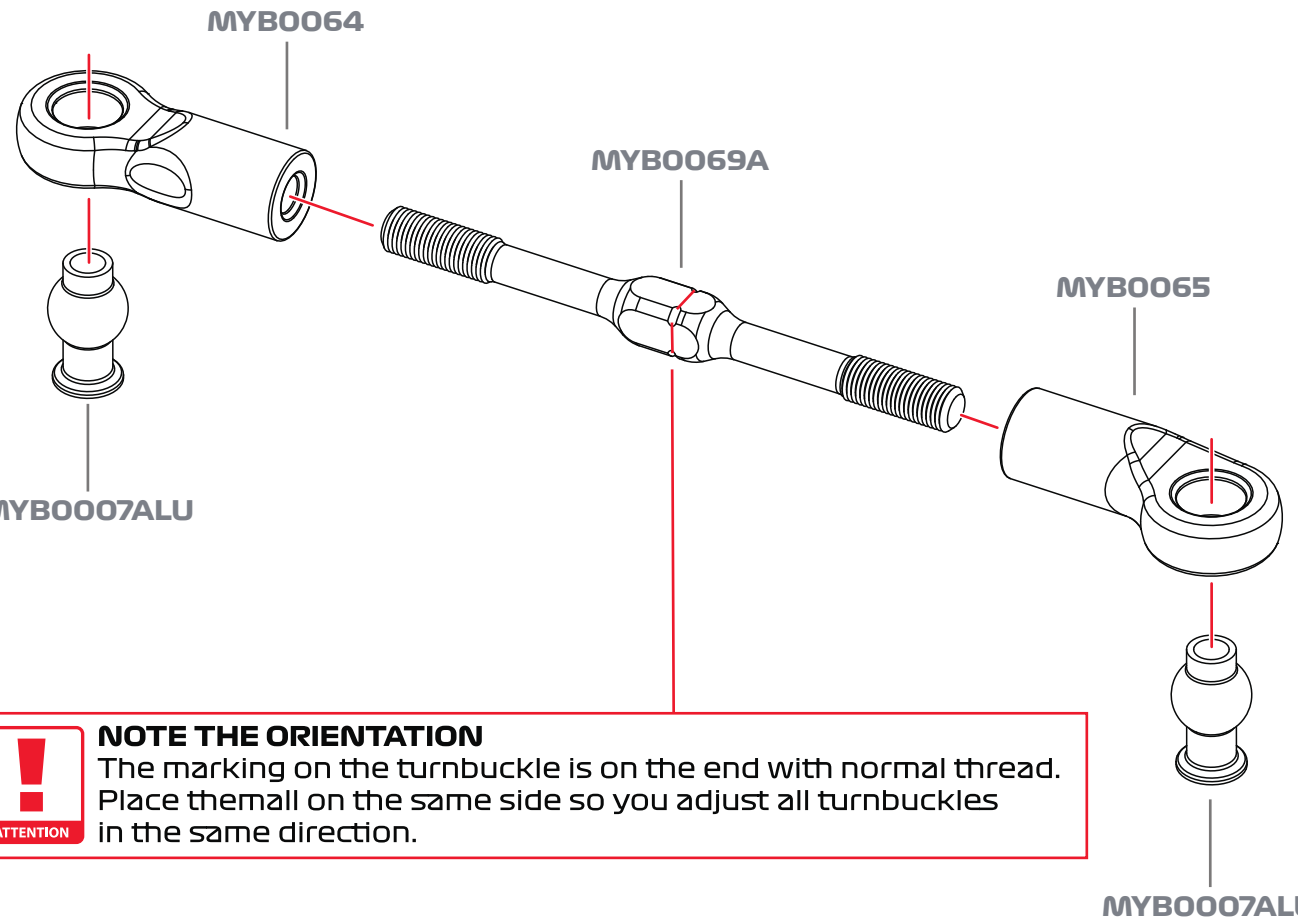

MAKE L=R

NOTE THE ORIENTATION
The marking on the turnbuckle is on the end with normal thread. Place themall on the same side so you adjust all turnbuckles in the same direction.

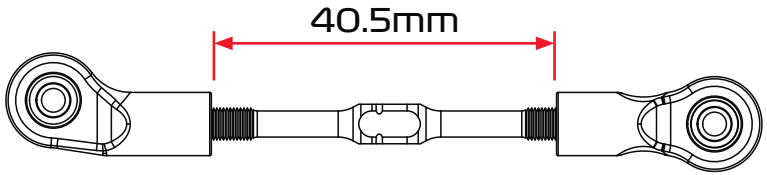

OPTION
MYB0069TI TI Turnbuckle

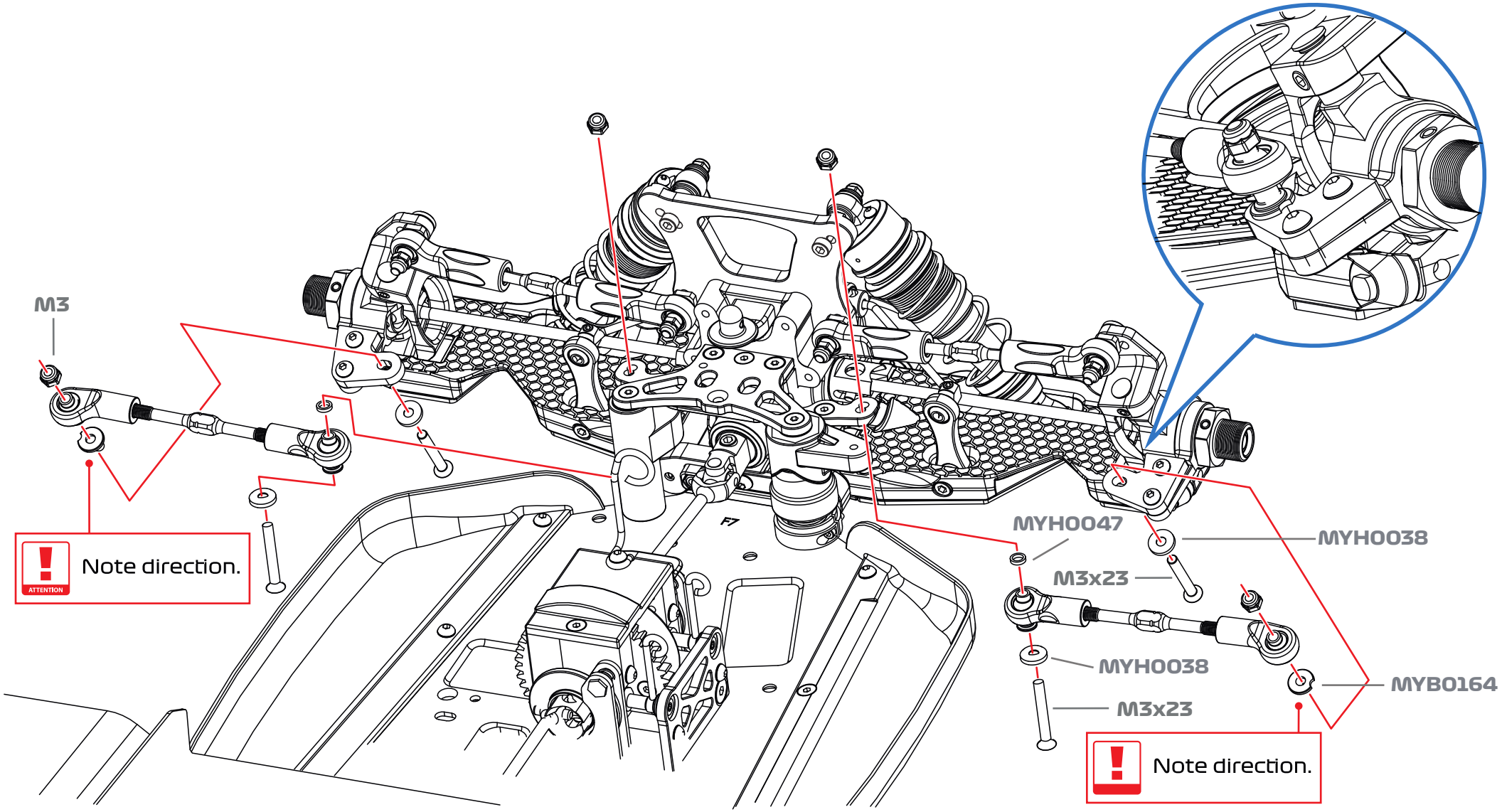
M3
Note direction.
MYH0047
MYH0038
M3x23
MYH0038
M3x23
MYB0164
Note direction.

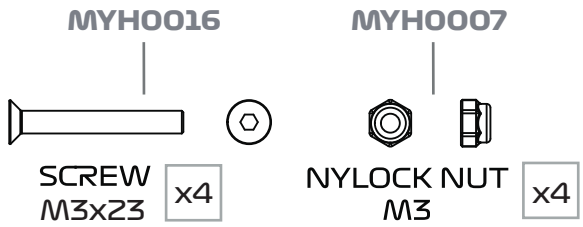
MYH0016
MYH0007
SCREW M3x23
x4
NYLOCK NUT M3
x4

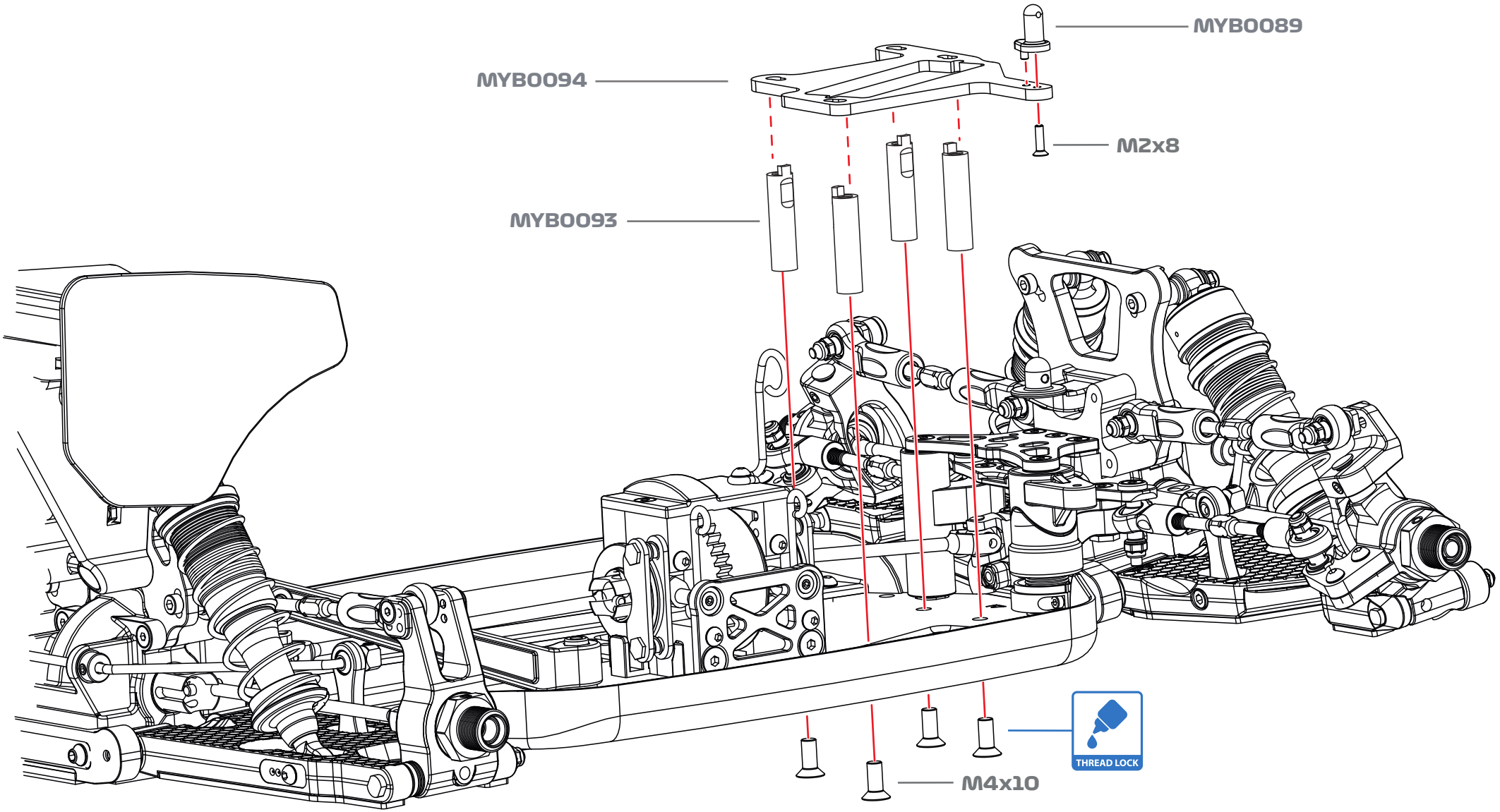
MYB0089
MYB0094
M2x8
MYB0093
THREAD LOCK
M4x10

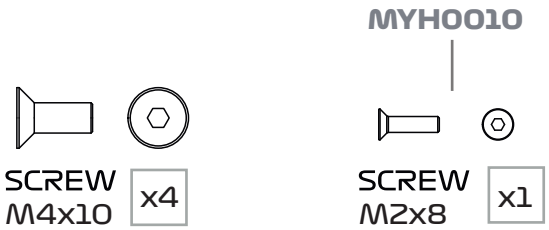
MYH0010
SCREW M4x10
x4
SCREW M2x8
x1

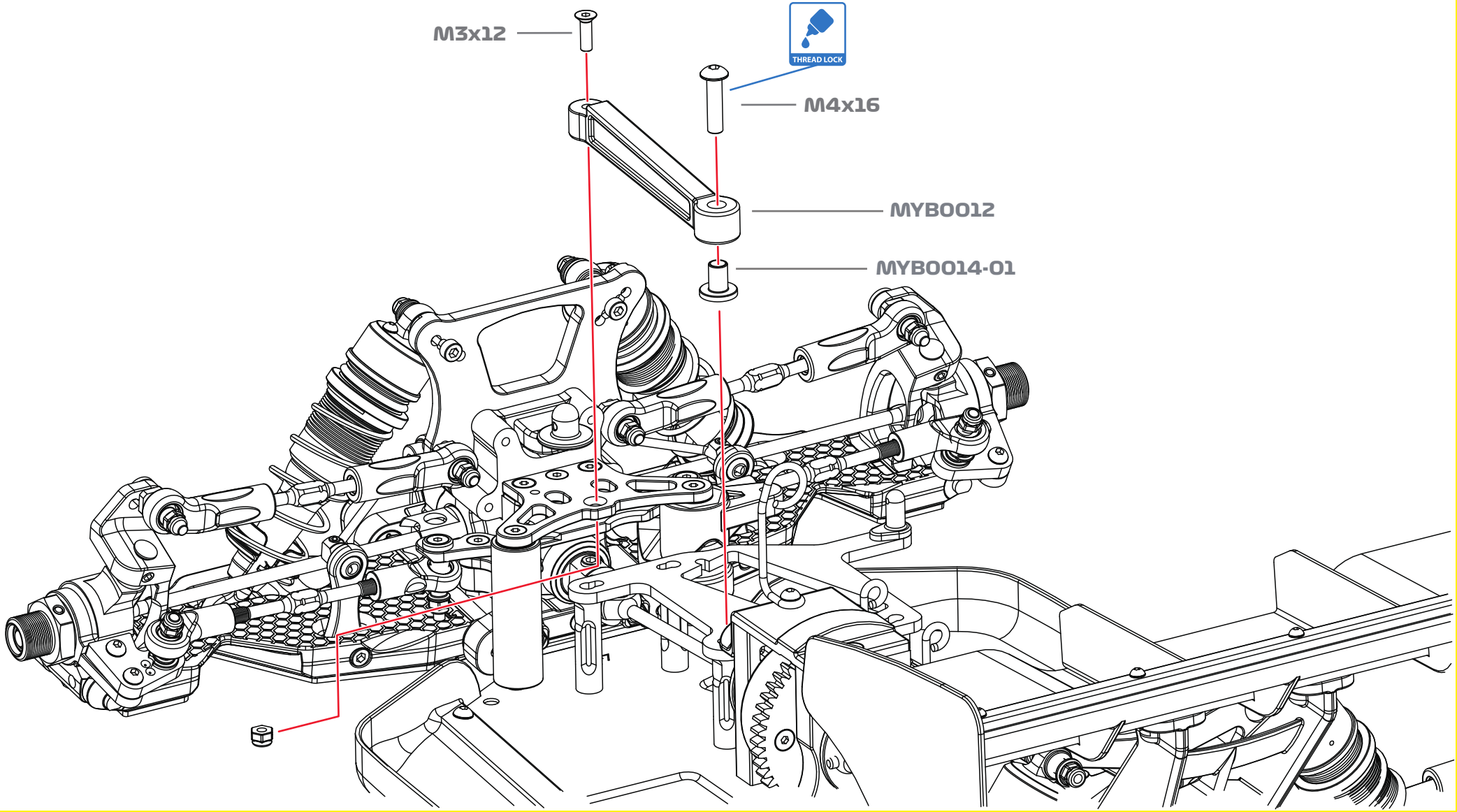

OPTIONS
MYB0014 0mm spacer for chassis braces
MYB0014-01 1mm spacer for chassis braces
MYB0014-02 2mm spacer for chassis braces

MYH0014

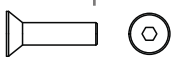

SCREW M3x12 x1

MYH0037

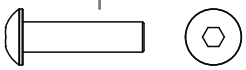

SCREW M4x16 x1

MYH0007

NYLOCK NUT M3 x1

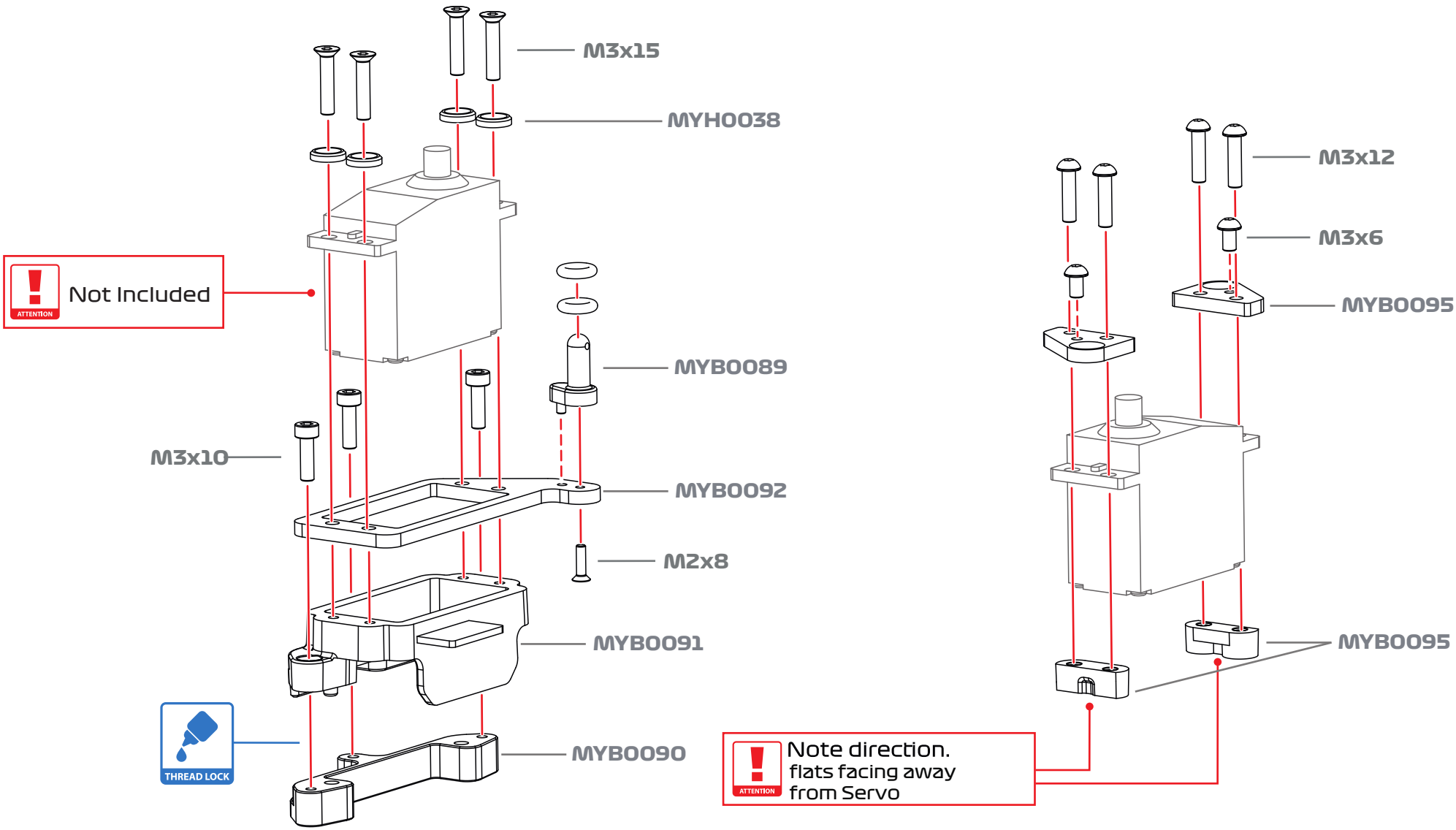

OPTION
MYB0090-01 Throttle servo holder Long

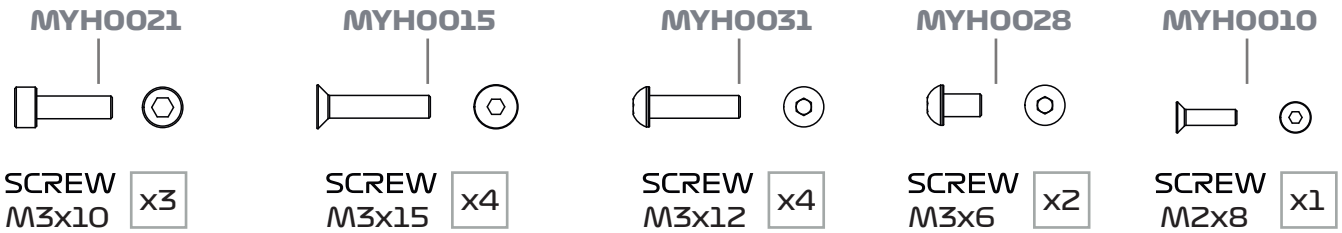

STEP 16

BAG M - Radio tray

THREAD LOCK

M4x8

ATTENTION

Shims can be added to raise the servos from the chassis as needed.
1-2mm clearance is suggested.

THREAD LOCK

M4x8

MYH0017

SCREW M4x8 x2

SCREW M4x10 x2

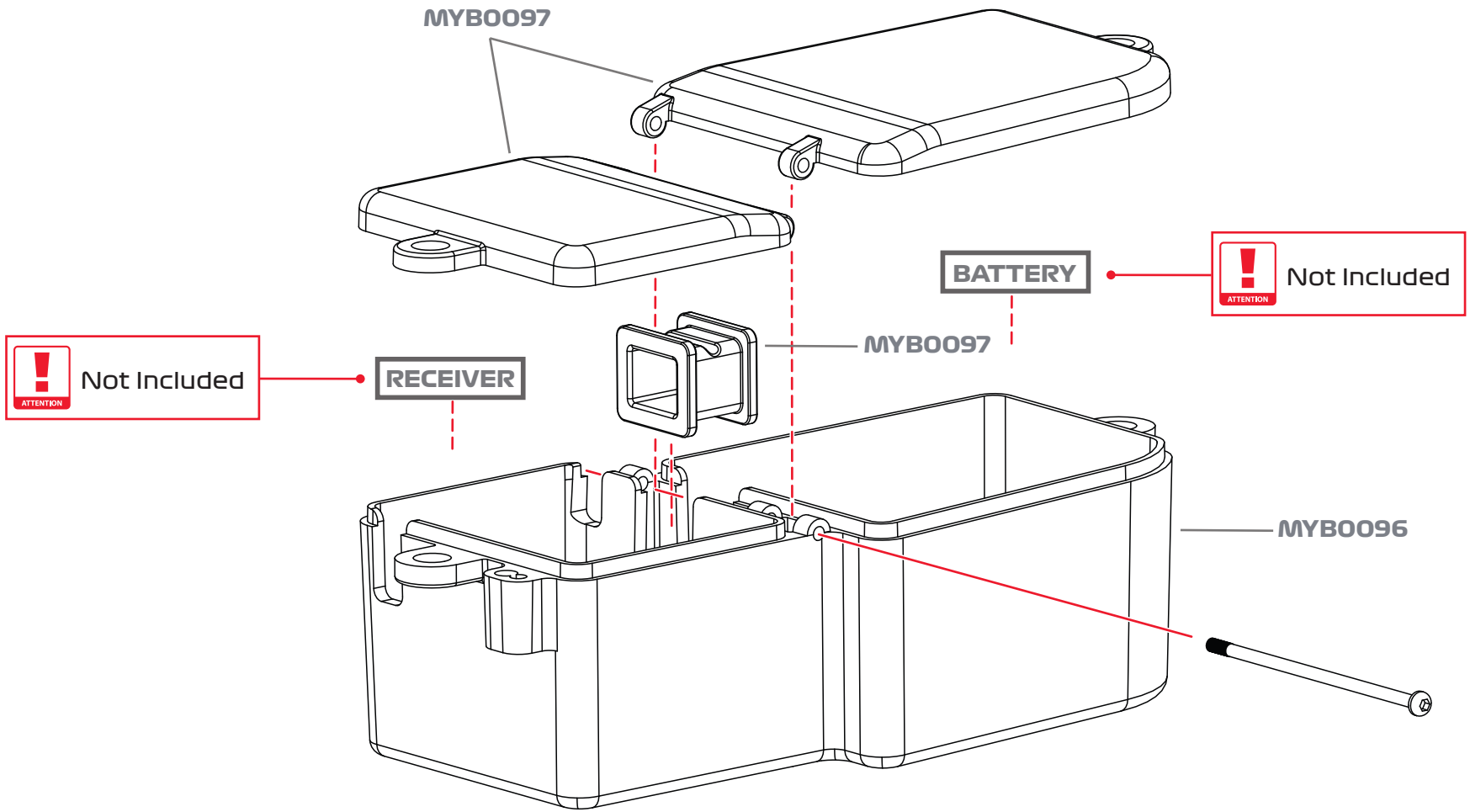
MYB0097
BATTERY
Not Included
MYB0097
Not Included
RECEIVER
MYB0096

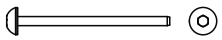

SCREW x1

STEP 16

BAG N - Radio tray

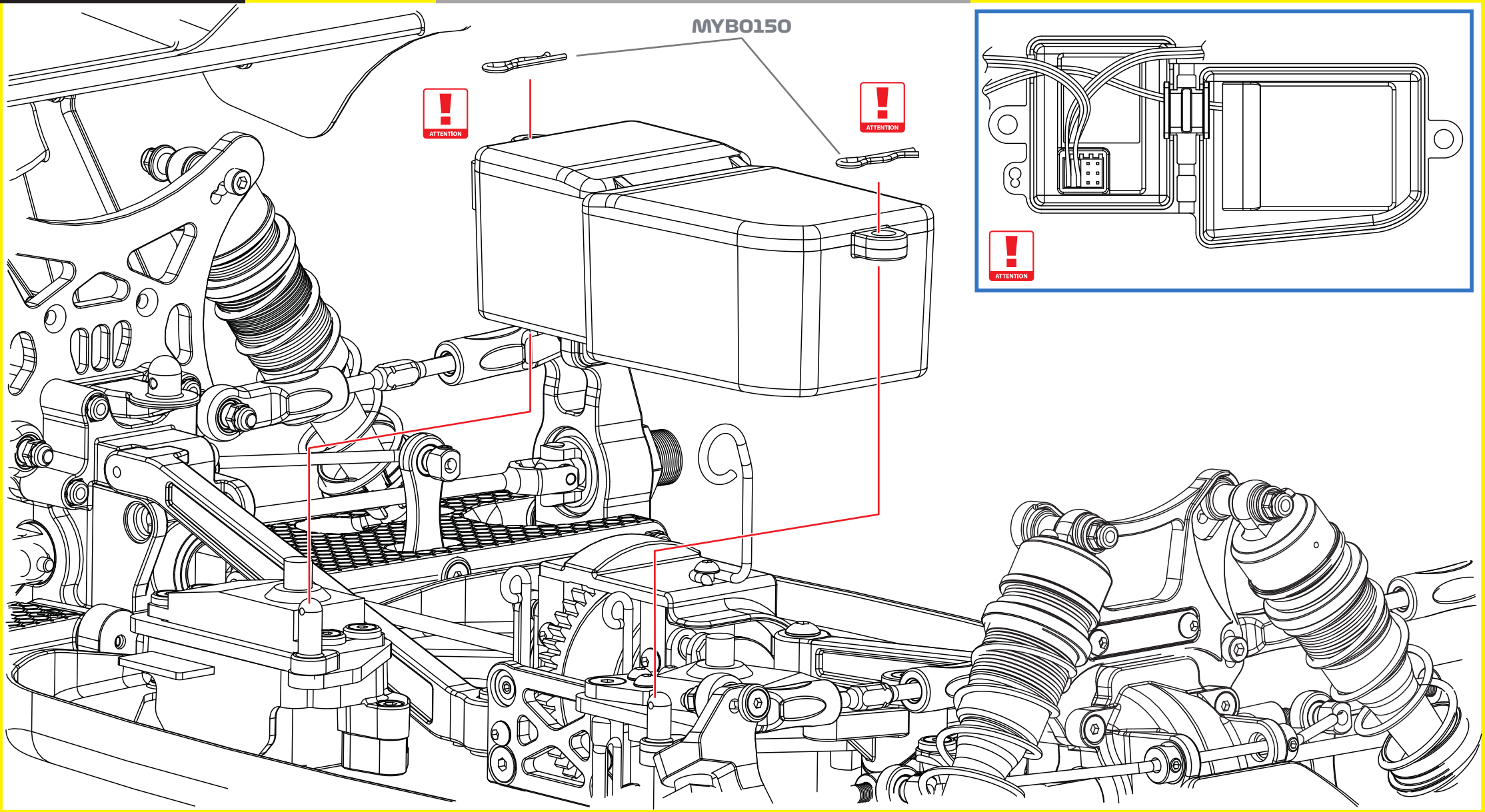

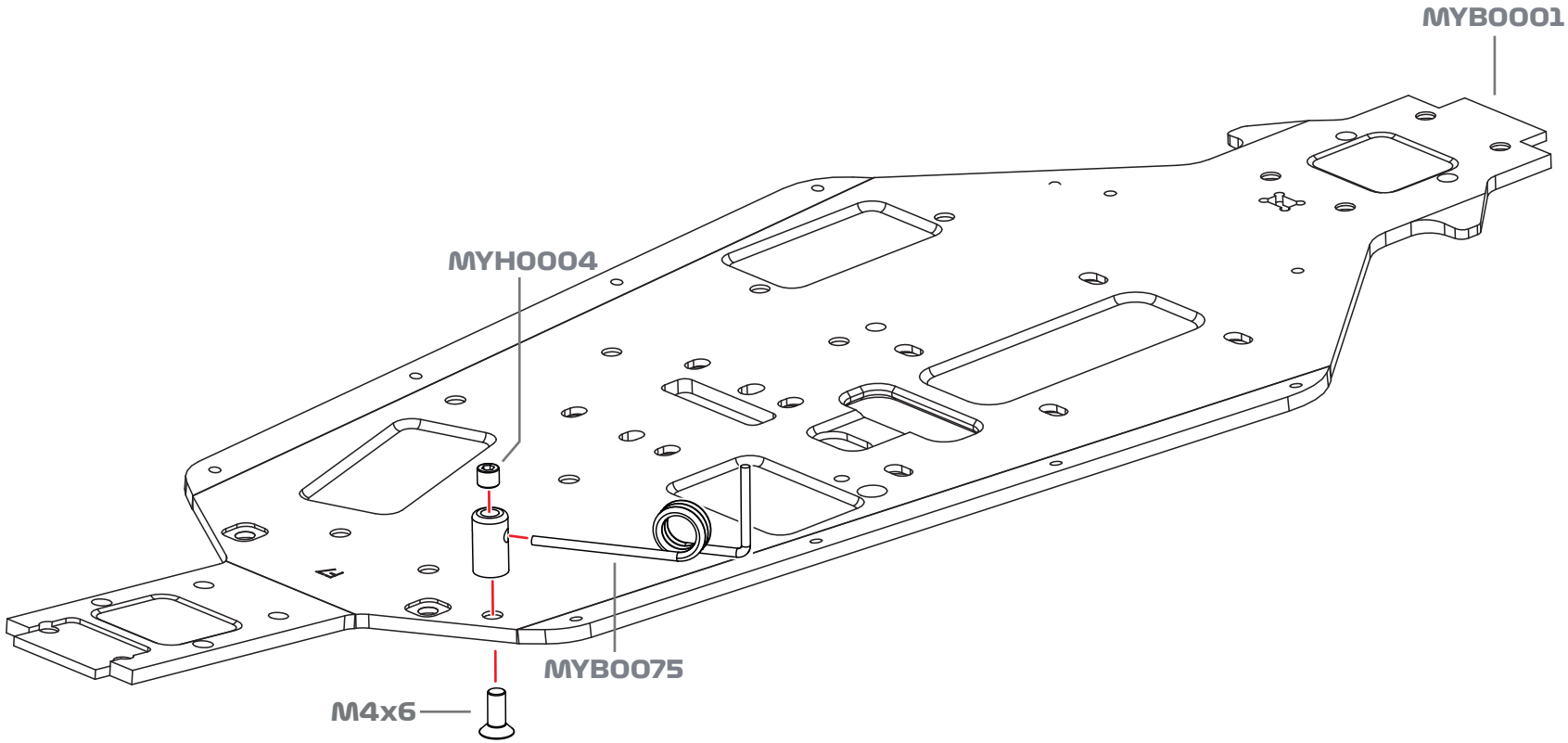
MYB0001
MYH0004
MYB0075
M4x6

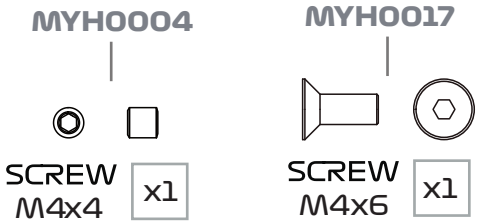
MYH0004
SCREW M4x4
x1
MYH0017
SCREW M4x6
x1

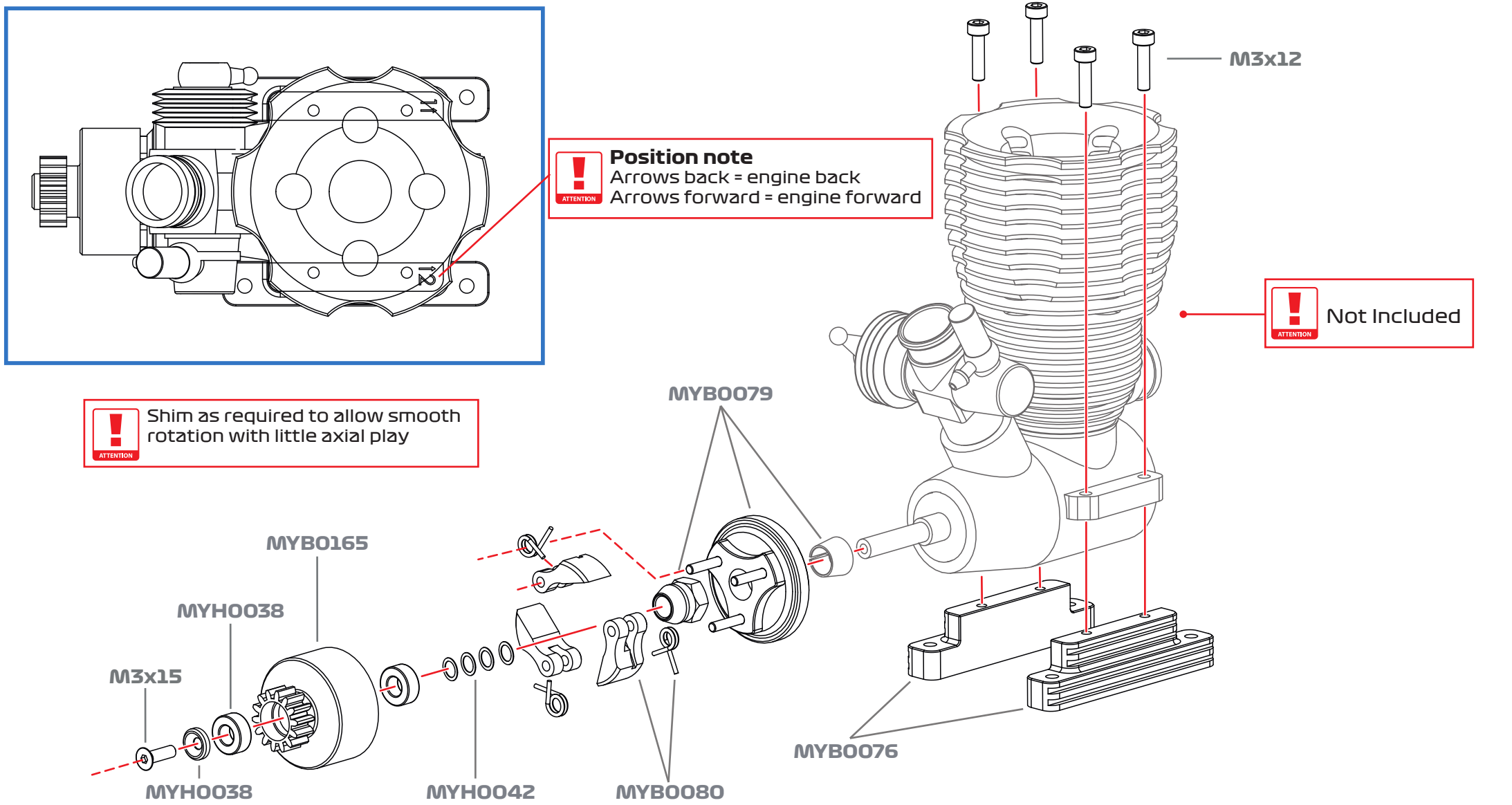

OPTIONS
MYB0077-01 Lower long left mount
MYB0077 Lower mount left and right
MYB0078 Upper mount
MYB0165MXP MXP bearings
MYB0081-09 0,9 springs
MYB0081 1,0 springs
MYB0081-01 1,1 springs

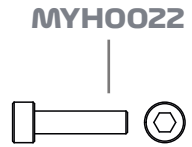

SCREW M3x12 x4

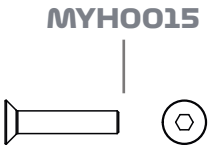

SCREW M3x15 x1

Sheet of paper

ATTENTION

ATTENTION

M4x8 - S

MYH0001

M4x8

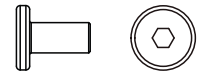

Special Screw

x4

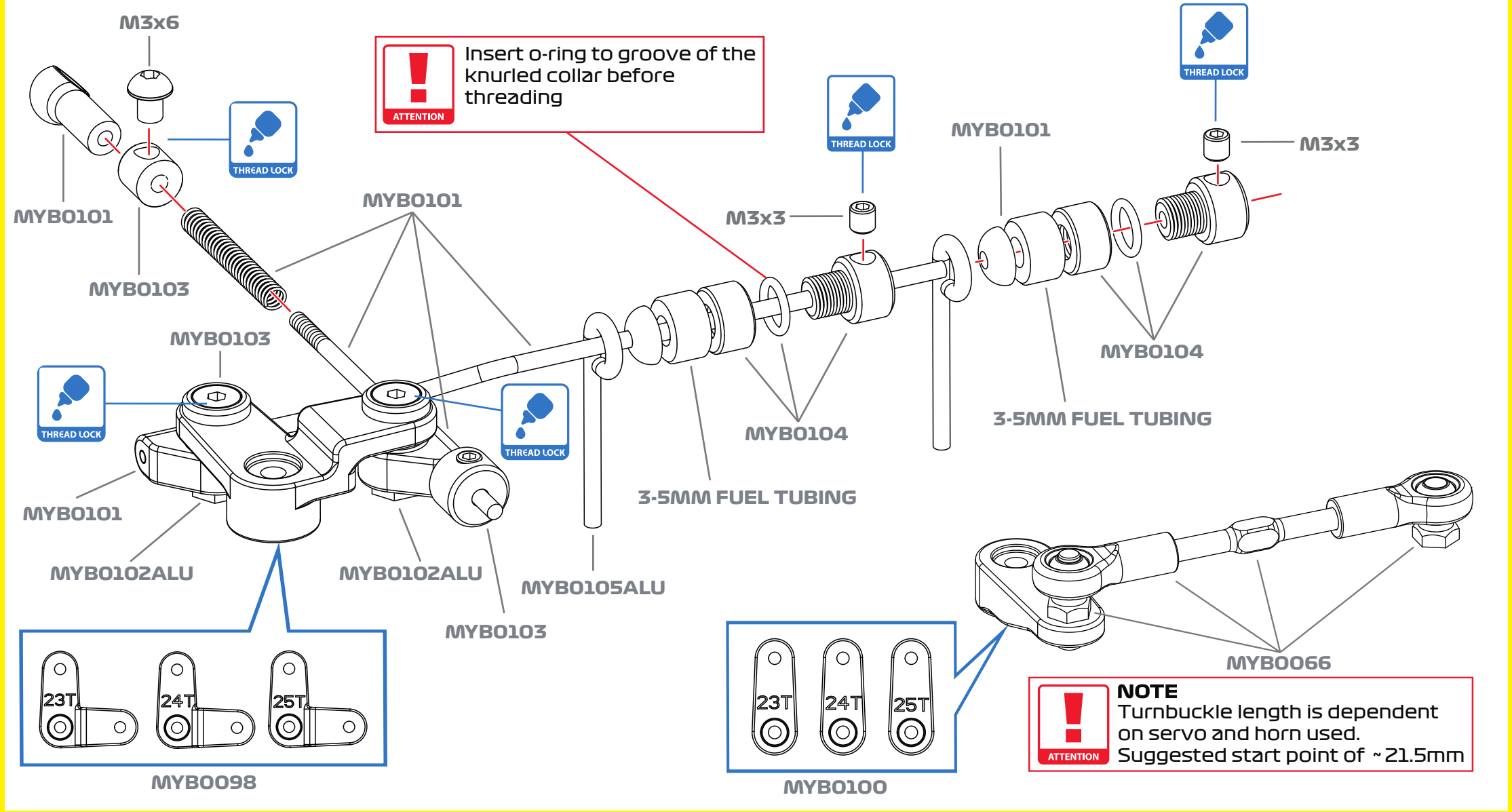

OPTIONS

MYB0100-23 23T Steering arm alu
MYB0100-25 25T Steering arm alu
MYB0099-23 23T Throttle arm alu
MYB0099-25 25t Throttle arm alu
MYB0067TI TI Servo link

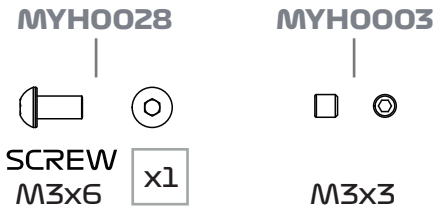

STEP 18

BAG O - Throttle and steering links

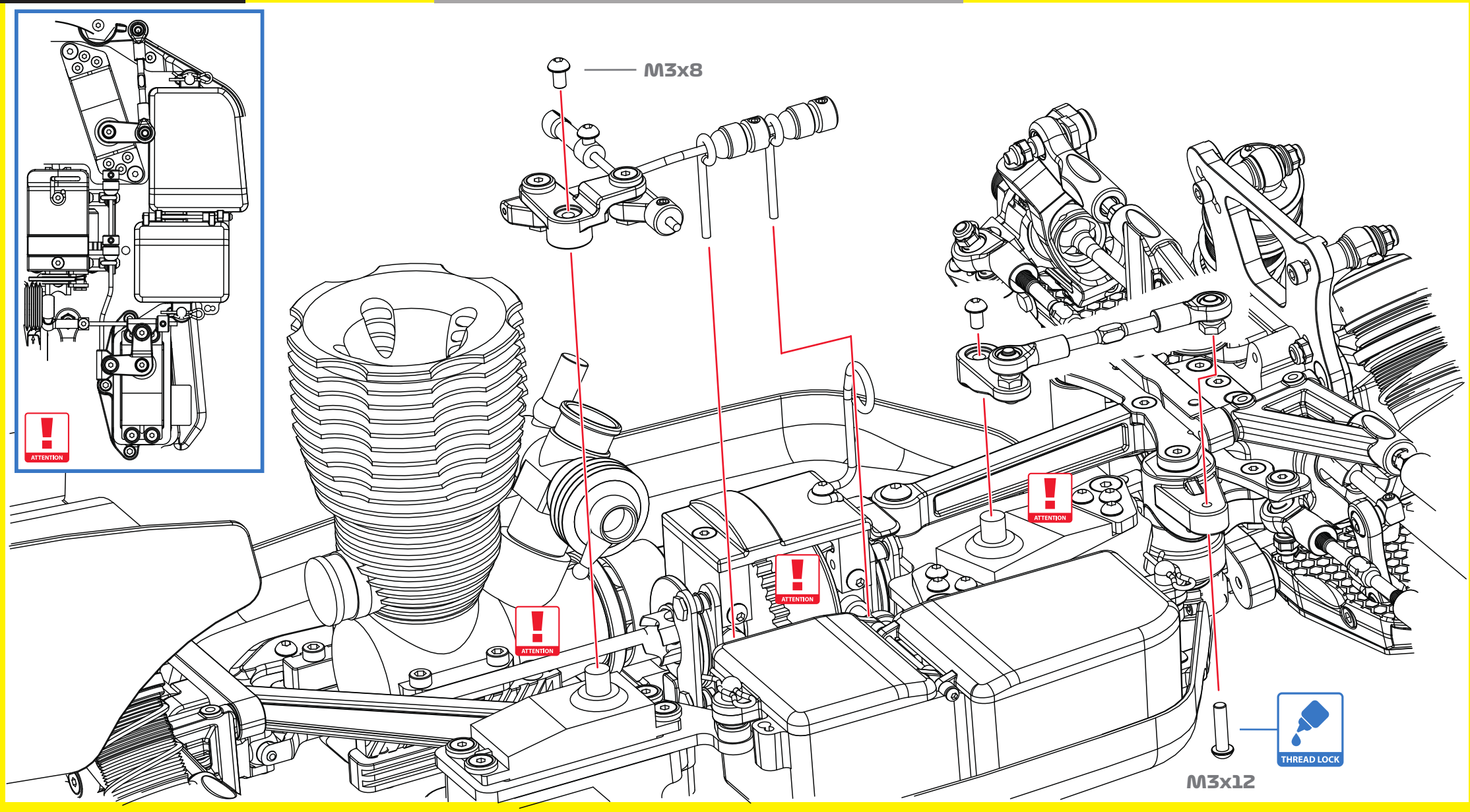

MYH0029

SCREW M3x8 x2

MYH0031

SCREW M3x12 x1

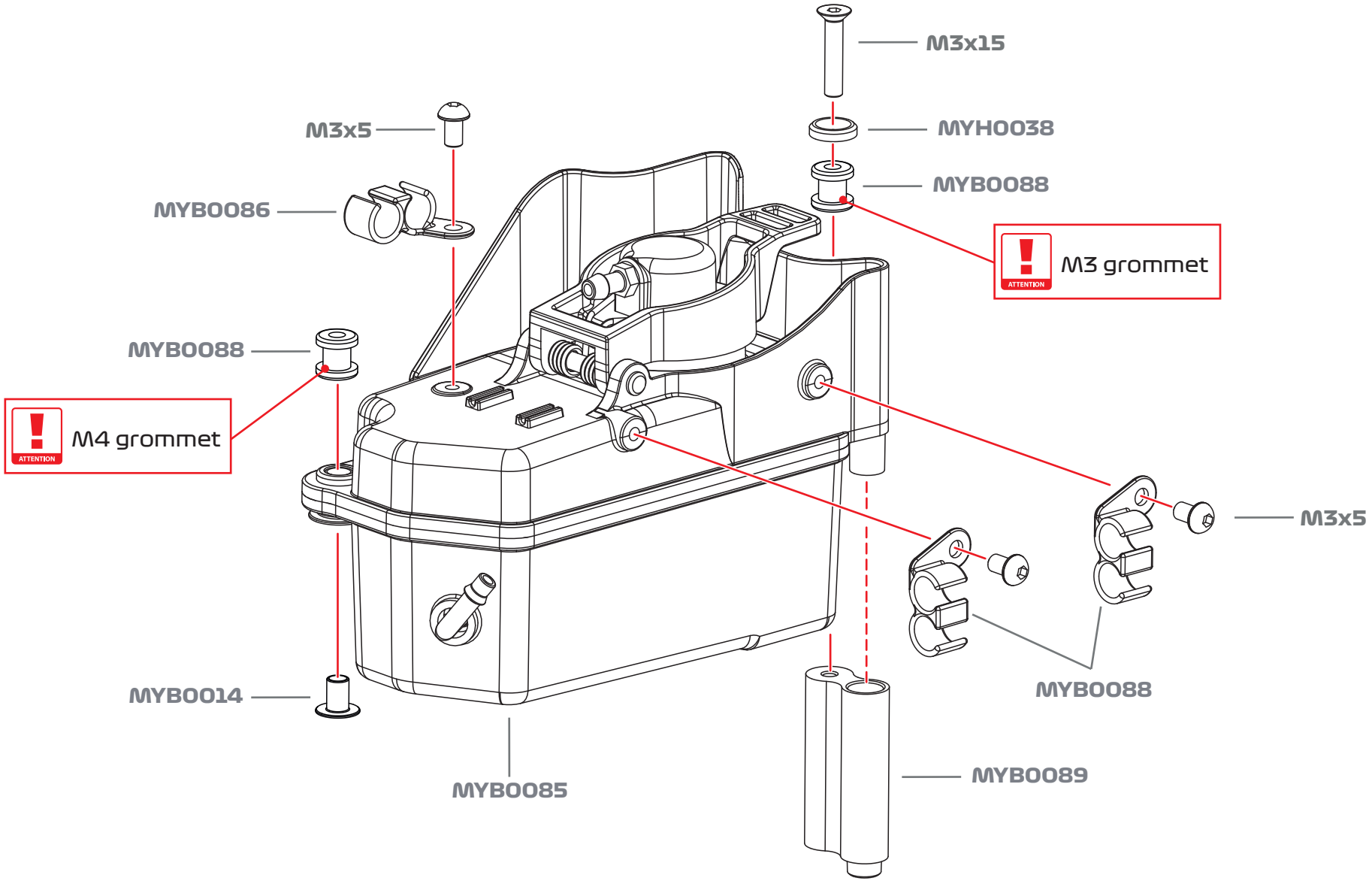
M3x15
MYH0038
M3x5
MYB0088
MYB0086
M3 grommet
MYB0088
M4 grommet
M3x5
MYB0088
MYB0014
MYB0085
MYB0089

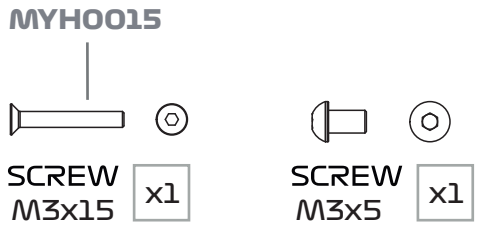
MYH0015
SCREW M3x15
x1
SCREW M3x5
x1

M4x16

THREAD LOCK

M3x10

MYH0037

SCREW M4x16 x1

MYH0013

SCREW M3x10 x1

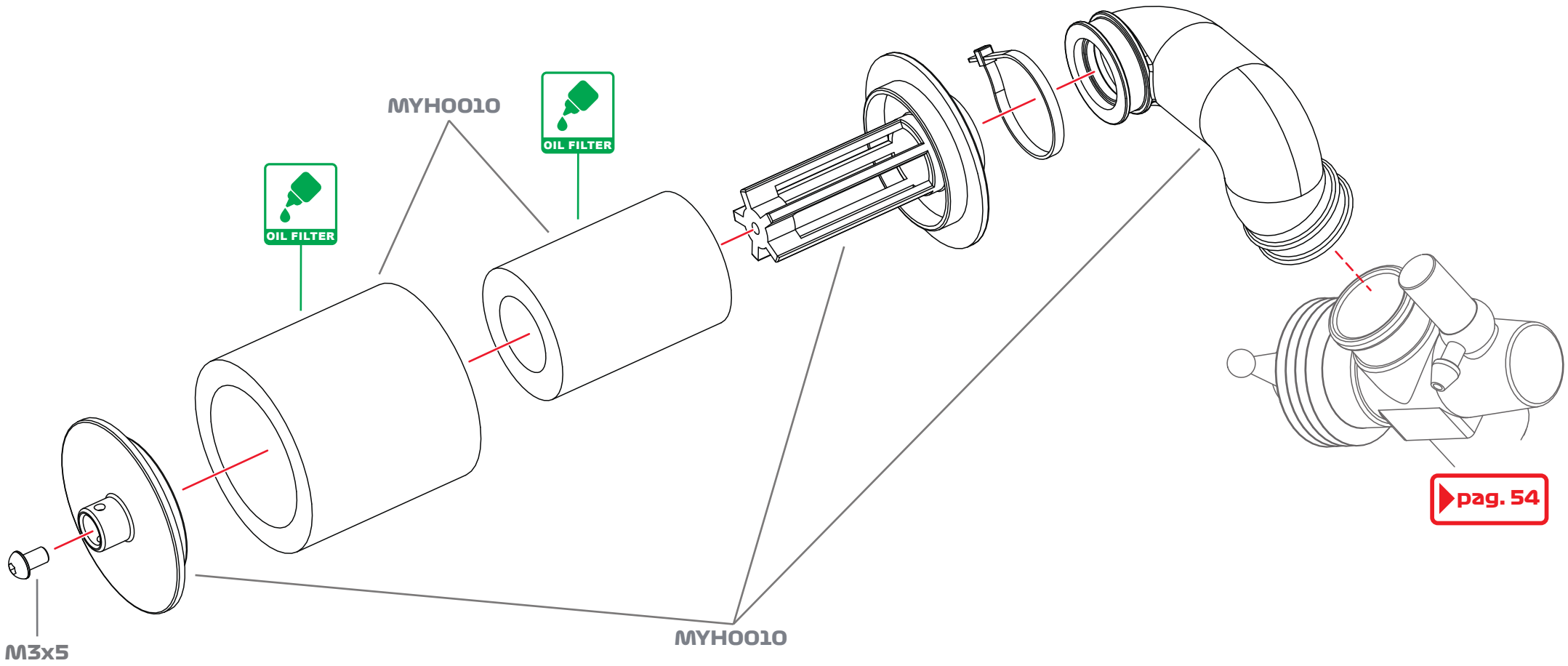

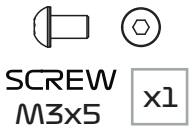

SCREW M3x5 x1

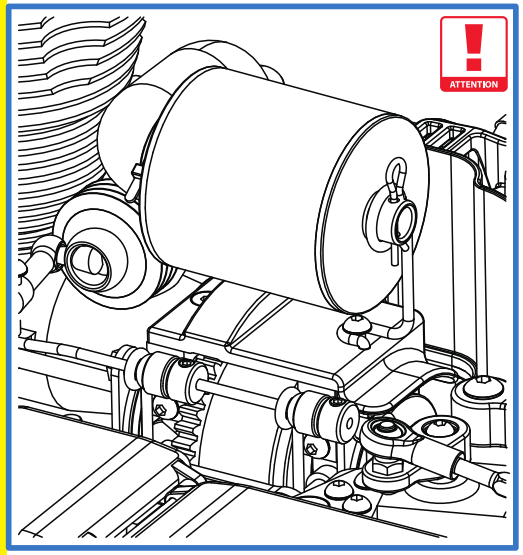
ATTENTION

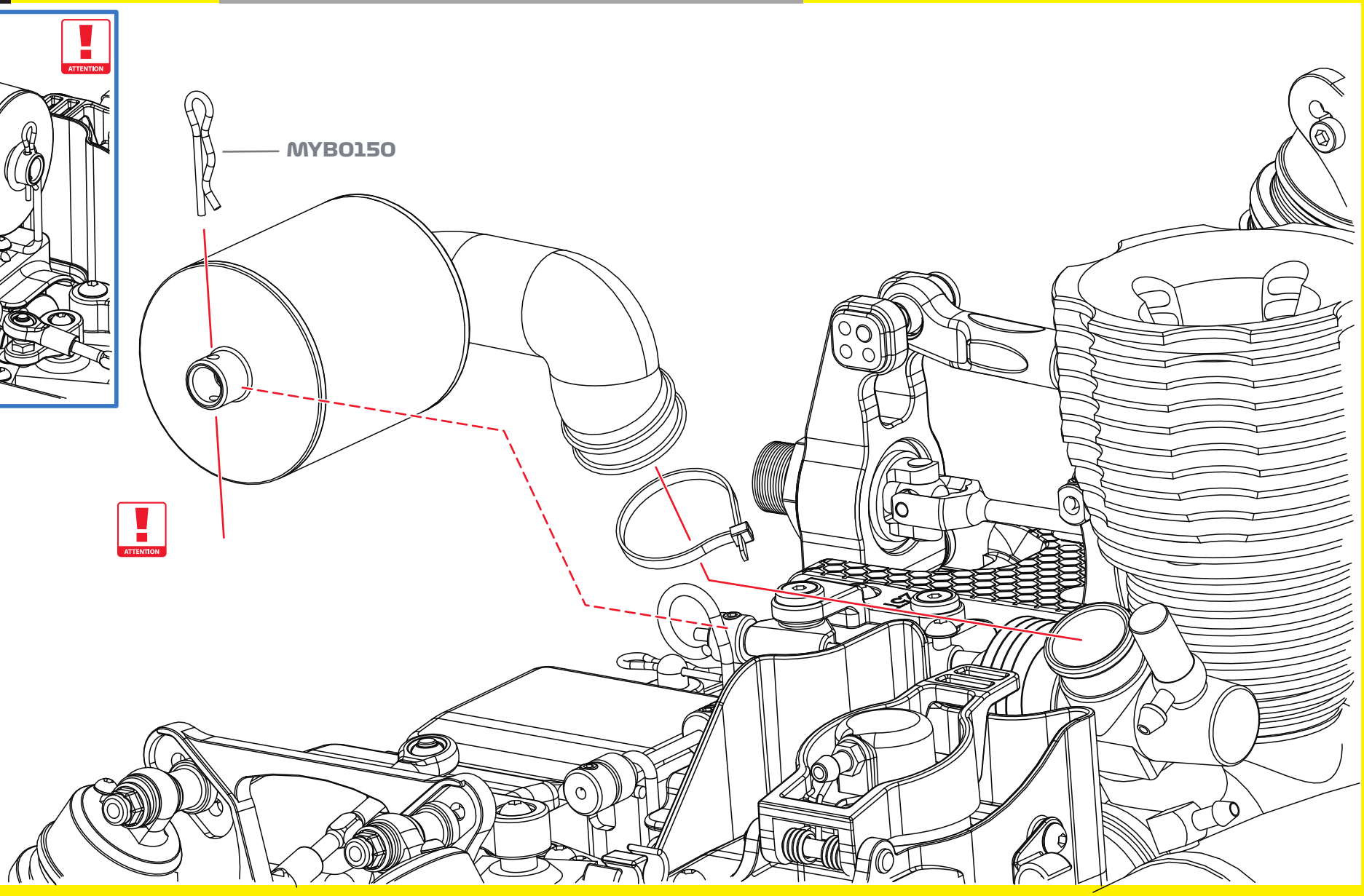
MYB0150
ATTENTION

STEP 21

BAG Q - Bodyshell install

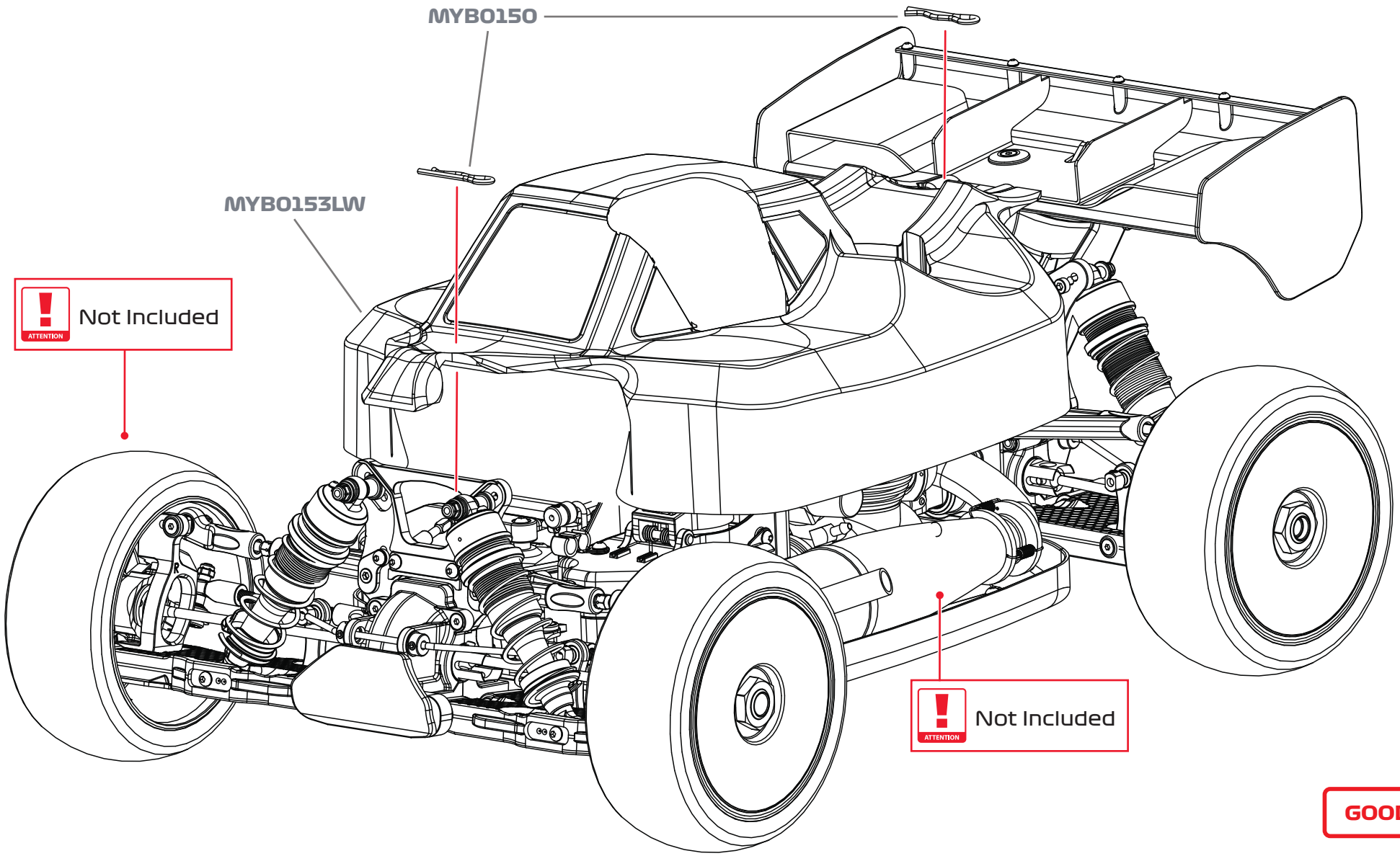

GOOD JOB!

OPTIONS
MYB0153-02 Body 2,0


マヤコ
Mayako