Name:	Date:	Event:	Track:

Track Conditions

❑ Indoor	❑ Clay	❑ Carpet	❑ Tight	❑ Smooth	❑ Hard Packed	❑ Blue Groove	❑ Wet	Bite: ❑ Low ❑ Med ❑ High	Other: _____
❑ Outdoor	❑ Dirt	❑ Astro	❑ Open	❑ Rough	❑ Loose/Loamy	❑ Dry	❑ Dusty	Tread: ❑ Pin ❑ Ghost ❑ Slicks	

Front Suspension

Ride Height	
Camber	
Toe	
Sway Bar	mm

Notes: _____

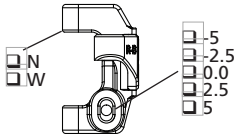

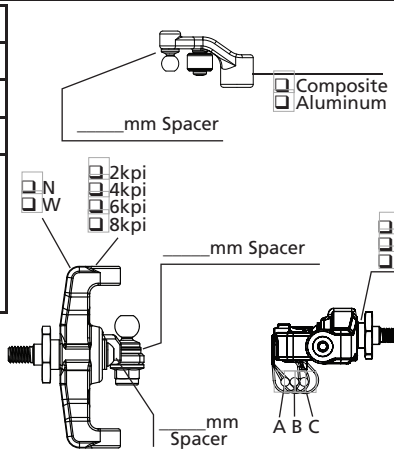

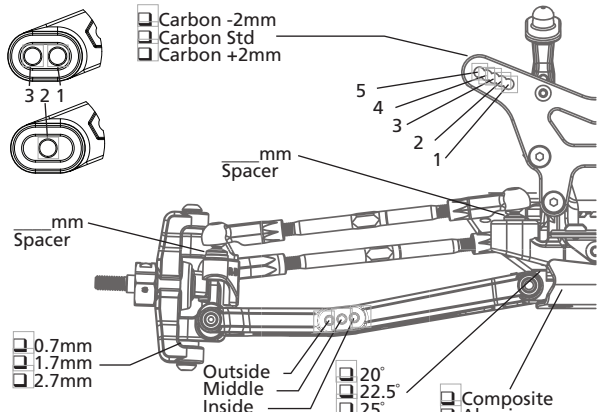

Rear Suspension

Ride Height	
Camber	
Sway Bar	mm

Notes: _____

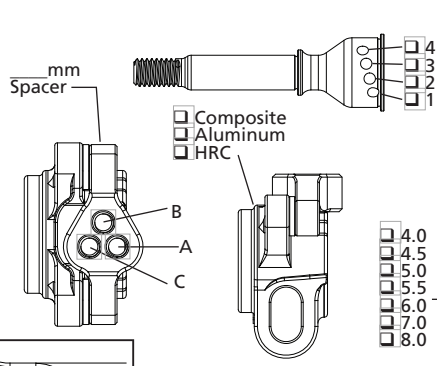

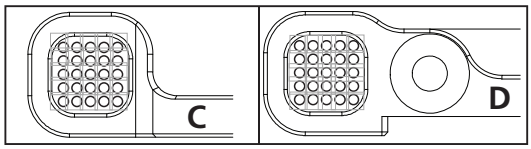

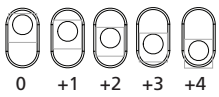

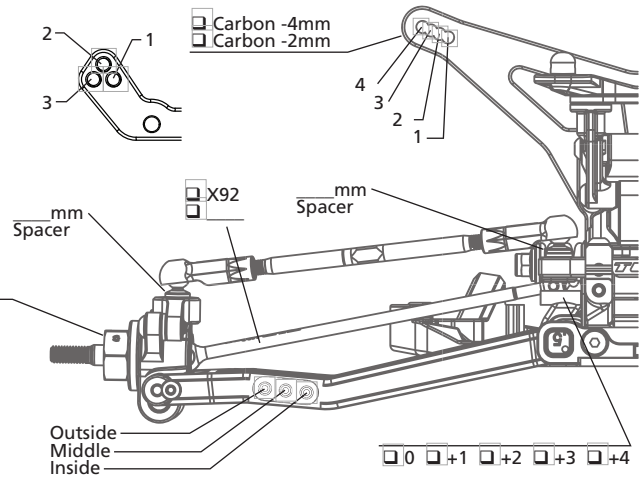

Chassis

Drive Train

Diff Type	❑ Ball Diff ❑ Gear Diff
Setting/Fluid	
Internal Gears	❑ Steel ❑ Composite
Planet Gears	❑ 2 ❑ 4
Slipper	❑ Slipper ❑ Direct Drive

Aerodynamics

Body	
Notes	

Tires

	Front	Rear
Brand		
Tread		
Compound		
Insert		
Sauce		
Wheel		
Notes		

Shocks

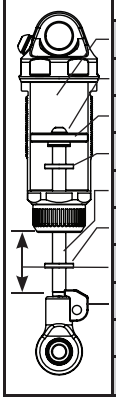

	Front	Rear
Oil		
Piston Holes		
Piston	❑ 2mm ❑ 2.5mm	❑ 2mm ❑ 2.5mm
Limiter, Int	mm	mm
Shaft Dia	❑ 3.0mm ❑ 3.5mm	❑ 3.0mm ❑ 3.5mm
Limiter, Ext	mm	mm
Stroke	mm	mm
Eyelet	❑ Std ❑ +2mm	❑ Std ❑ +2mm
Spring		
Spring Cup	❑ Low ❑ Mid ❑ High	❑ Low ❑ Mid ❑ High

Electronics

Radio		ESC	
Servo		Thro Prof	
Battery		Timing Adv	
Battery Wt	g	Initial Brake	
Motor		Drag Brake	
Gearing	/	Thr/Bra EPA	/

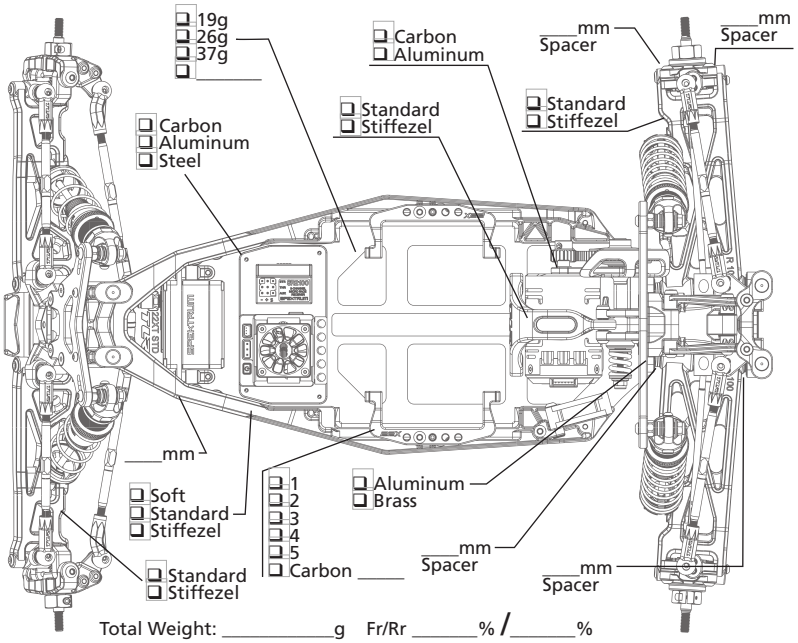

Total Weight: _____g Fr/Rr _____% / _____%