SET-UP SHEET

XRAY XB8'26

RACE			
TRACK			
NAME		DATE	

TEMPERATURE AIR		TEMPERATURE TRACK	
LAPS	FINAL POSITION	BEST LAPTIME	RACE LENGTH
		/sec	/min

TRACKS

SIZE	☐ OPEN	☐ MEDIUM	☐ TIGHT
TRACTION	☐ LOW	☐ MEDIUM	☐ HIGH
SURFACE	☐ SMOOTH	☐ MEDIUM	☐ BUMPY
TYPE	☐ HARD PACKED	☐ SOFT DIRT	☐ CLAY
☐ GLUED	☐ BLUE GROVE	☐ ASTRO TURF	☐ GRASS
CONDITION	☐ DRY	☐ DUSTY	☐ WET ☐ MUD

DIFFERENTIAL

	FRONT	CENTER	REAR	
CASE MATERIAL				CASE MATERIAL
OIL				OIL
CROWN GEAR				CROWN GEAR
GEAR	2 ☐ ☐ 4		2 ☐ ☐ 4	GEAR
PINION	13 ☐ ☐ 14		13 ☐ ☐ 14	PINION

GEARING

CLUTCH SHOE	3 ☐ ☐ 4 (KIT)		
SPRINGS			
CLUTCH BELL	/T	SPUR GEAR	/T

SHOCKS

FRONT		REAR
	TYPE	
	SPRINGS	
	MEMBRANE	
/cSt	OIL	/cSt

STANDARD PISTONS

☐ 6 HOLES	☐ 1.1 mm	☐ 6 HOLES ☐		
☐ 8 HOLES	☐ 1.2 mm	☐ 8 HOLES ☐		
☐ 10 HOLES	☐ 1.3 mm	☐ 10 HOLES ☐		
	☐ 1.4 mm			
☐	OTHER	☐		

VALVE PISTONS

5+2 HOLES ☐	☐ 1.5 mm	☐ 5+2 HOLES
6+2 HOLES ☐	☐ 1.3 mm	☐ 6+2 HOLES
	☐ 1.4 mm	
8+2 HOLES ☐	☐ 1.2 mm	☐ 8+2 HOLES
	☐ 1.3 mm	

ANTI-ROLL BAR

FRONT	THICKNESS	REAR
/mm		/mm

TIRES

FRONT		REAR
	BRAND	
	COMPOUND	
	INSERTS	
	WHEELS	

ENGINE

TYPE	
MUFFLER	
MANIFOLD	
PLUG	
FUEL	

BODY

EAZY ☐ EAZY LIGHT ☐ OTHER

TOTAL WEIGHT
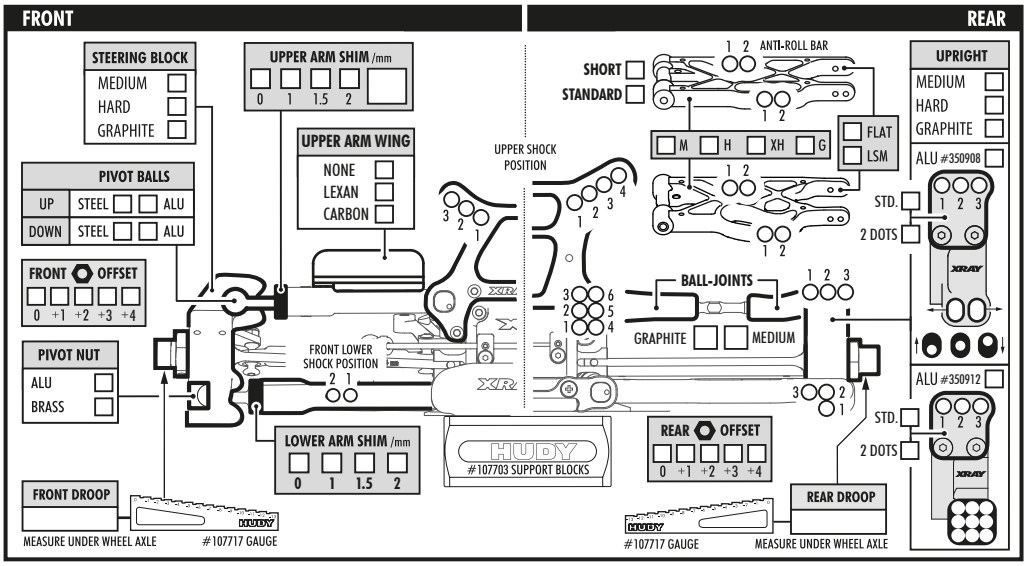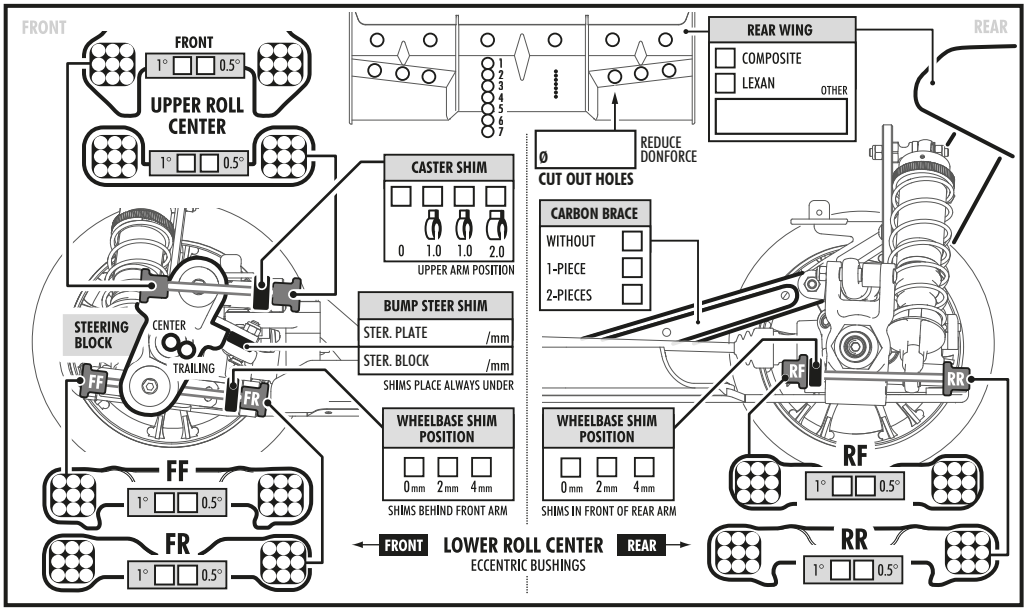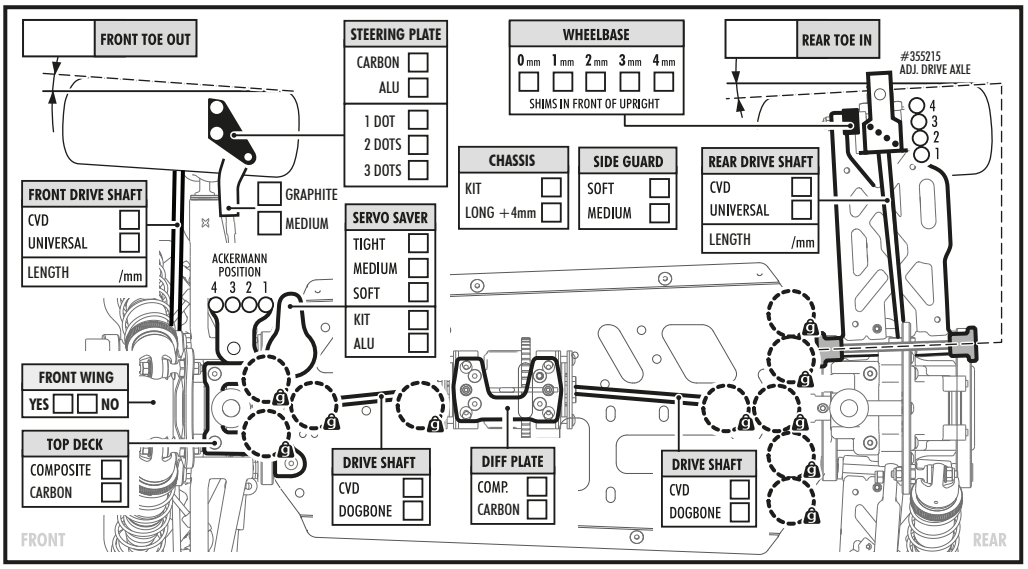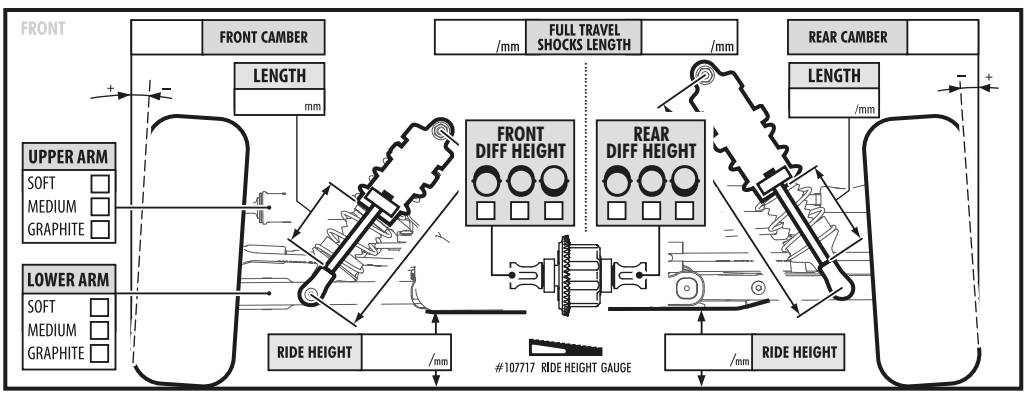
/g