DRIFT PACKAGE 2WD Exploded View

パーツ交換、メンテナンスの際は、付属のRD2.0組立説明書を参照ください。
For parts replacement and maintenance, refer to the attached RD2.0 instruction manual.

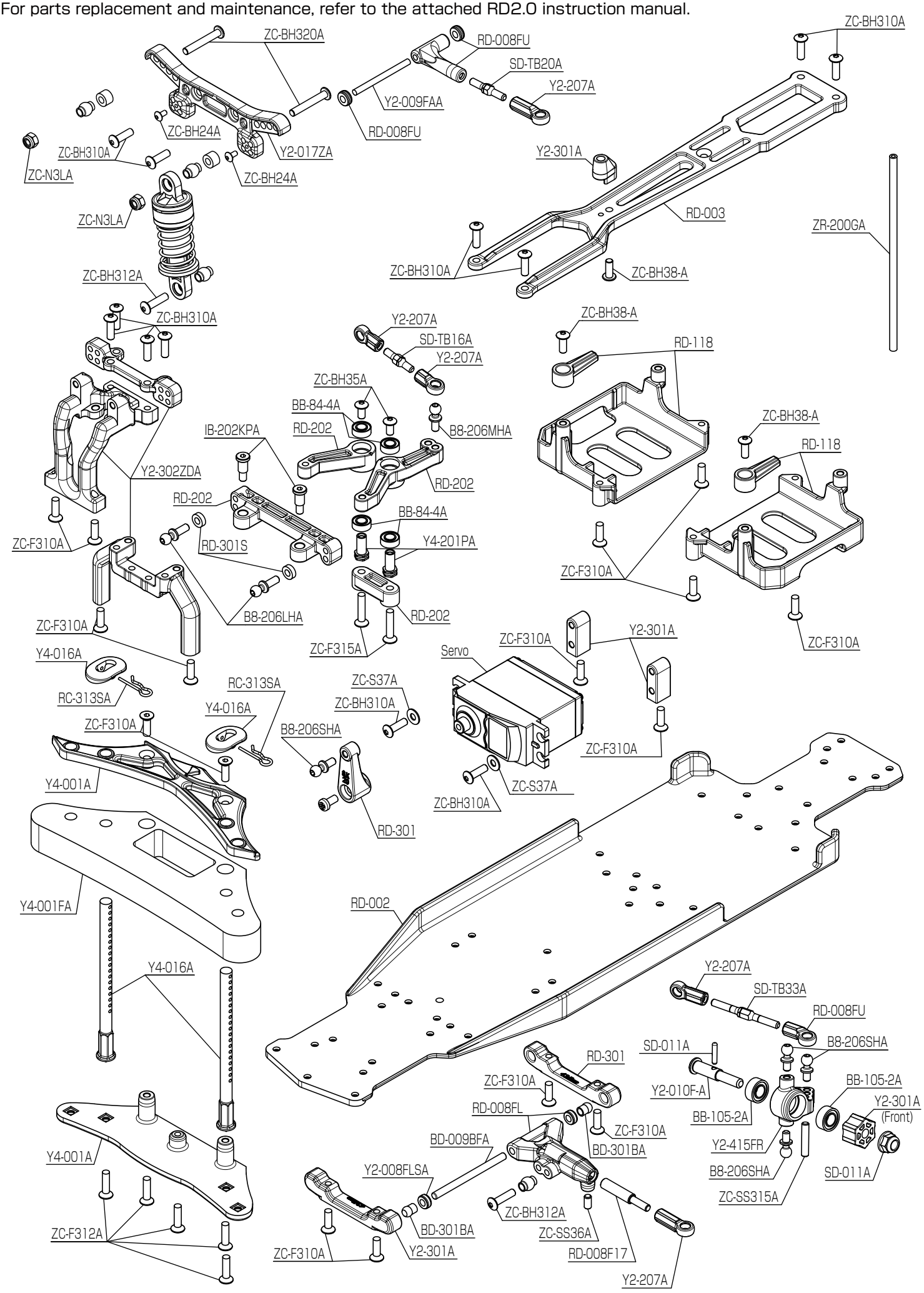

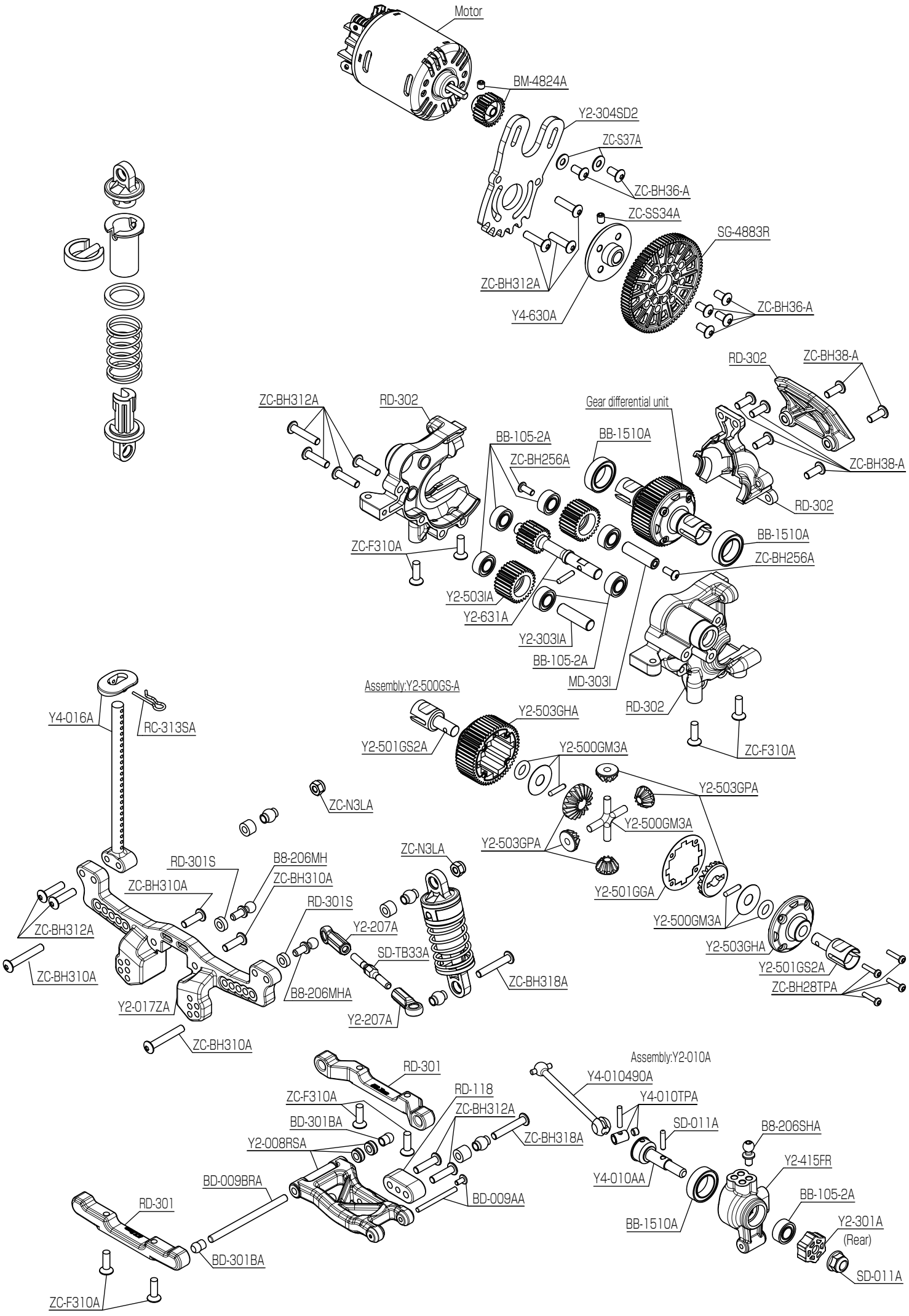
Motor
BM-4824A
Y2-304SD2
ZC-S37A
ZC-BH36-A
ZC-SS34A
SG-4883R
ZC-BH312A
Y4-630A
ZC-BH36-A
RD-302
ZC-BH38-A
ZC-BH312A
RD-302
Gear differential unit
BB-105-2A
BB-1510A
ZC-BH256A
ZC-BH38-A
RD-302
BB-1510A
ZC-F310A
ZC-BH256A
Y2-503IA
Y2-631A
Y2-303IA
BB-105-2A
MD-303I
RD-302
ZC-F310A
Assembly:Y2-500GS-A
Y2-503GHA
Y2-501GS2A
Y2-500GM3A
Y2-503GPA
Y2-500GM3A
Y2-503GPA
Y2-501GGA
Y2-500GM3A
Y2-503GHA
Y2-501GS2A
ZC-BH28TPA
Y4-016A
RC-313SA
ZC-N3LA
RD-301S
B8-206MH
ZC-BH310A
ZC-BH310A
ZC-BH312A
ZC-BH310A
RD-301S
Y2-207A
SD-TB33A
ZC-N3LA
ZC-BH318A
B8-206MHA
Y2-017ZA
Y2-207A
ZC-BH310A
RD-301
ZC-F310A
BD-301BA
Y2-008RSA
RD-118
ZC-BH312A
ZC-BH318A
BD-009BRA
BD-009AA
RD-301
BD-301BA
ZC-F310A
Assembly:Y2-010A
Y4-010490A
Y4-010TPA
SD-011A
B8-206SHA
Y2-415FR
Y4-010AA
BB-105-2A
BB-1510A
Y2-301A
(Rear)
SD-011A