AWESOMATIX A800FX

SETUP SHEET

NAME
COUNTRY
RACE
TRACK

DATE TEMP. °C AIR / TRACK /
COMPOSITION ASPHALT ☐ (OUTDOOR ☐ INDOOR ☐) CARPET ☐
LAYOUT TECHNICAL ☐ MIXED ☐ FAST ☐
TRACTION LOW ☐ MEDIUM ☐ HIGH ☐

FRONT

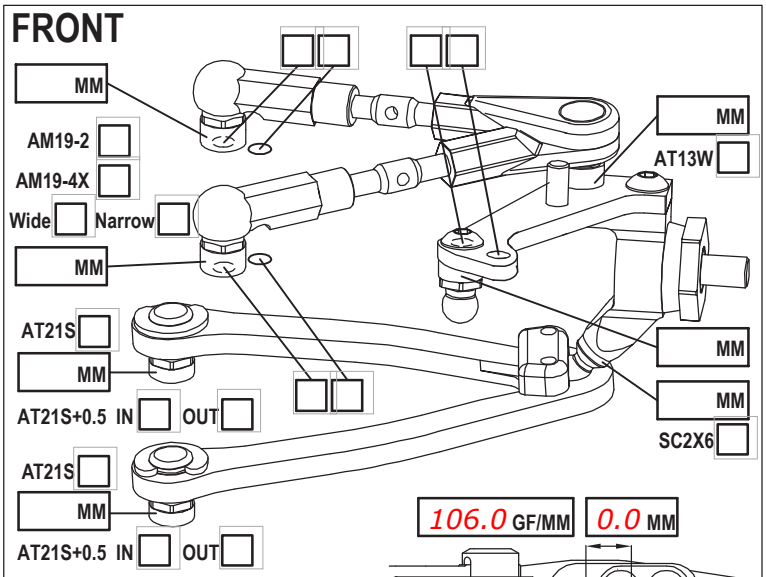

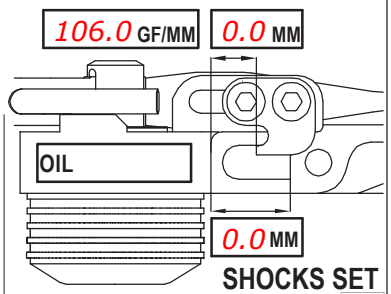

CAMBER ANGLE / °
CASTER ANGLE / °
TOE ANGLE / °
RIDE HEIGHT / MM
DOWNSTOP / MM
UPWNSTOP / MM
STABILIZER Ø / MM
LOW ARM C04M1+0.5 ☐ ☐
STEER. ARM AM14LS ☐ ☐
WHEEL SPACER / MM
FRONT DRIVE SPOOL ☐ GB2B ☐
DIFF. OIL
DIFF WASHERS
DOGBONE DRIVE ST02 ☐
WHEELHUB AM06WL ☐ ☐

SHOCKS SET

ROTOR	STD ✔	☐
SPRING	STD ✔	S ☐
DAMPER	D2.2 ☐	☐
SRS/RHS ARR.	I ✔	II ☐
PSS SETUP	MM 25% ☐	15% ☐
	LOW ☐	HIGH ☐

REAR

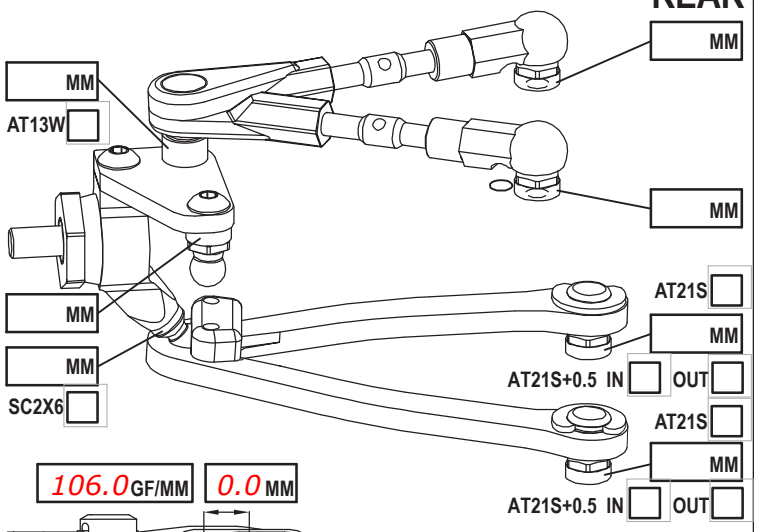

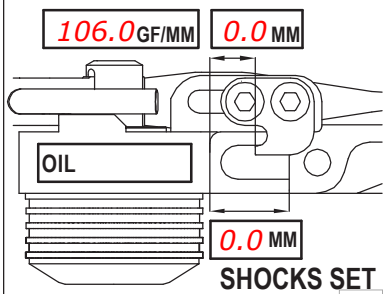

CAMBER ANGLE / °
CASTER ANGLE / °
TOE ANGLE / °
RIDE HEIGHT / MM
DOWNSTOP / MM
UPWNSTOP / MM
STABILIZER Ø / MM
LOW ARM C04M1+0.5 ☐ ☐
STEER. ARM AM23 ☐ ☐
WHEEL SPACER / MM
WHEELHUB AM06WL ☐ ☐

SHOCKS SET

ROTOR	STD ✔	☐
SPRING	STD ✔	S ☐
DAMPER	D2.2 ☐	☐
SRS/RHS ARR.	I ✔	II ☐
PSS SETUP	MM 25% ☐	15% ☐

CHASSIS FLEX AND WEIGHT SETTINGS

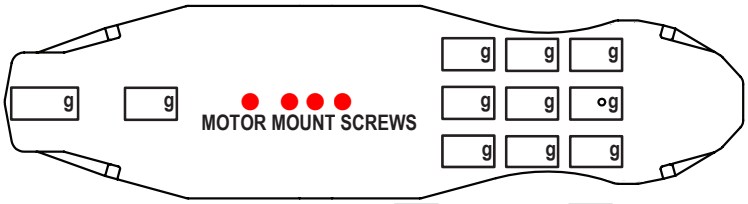

LOWER DECK C01B-FXC ☐ C01B-FXA ☐

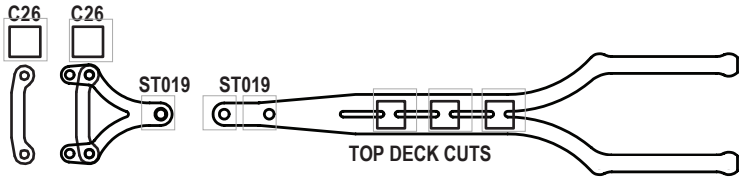

TOP DESK C27FX ☐

TIRES

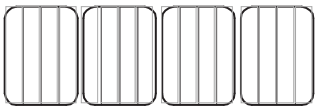

INSERTS
WHEELS
ADDITIVE TIME - FR RR
TOTAL WEIGHT WEIGHT DISTRIBUTION FR % - RR %

MOTOR LATERAL SHIFT / MM	ACKERMANN SHIMS / MM
MOTOR	SERVO
SPUR PINION 1 RATIO 0.00	STEER TRAVEL IN OUT
BODY	BATTERY
WING	RECEIVER
ESC	RADIO

ESC SETTING
BEST LAPTIME QUALIF./FINAL POSITION /