TEKNO RC Setup Sheet EB410.2

Name: _____ **Date:** _____ **Event:** _____

Track: INDOOR ○ OUTDOOR ○ **Size:** SMALL ○ MEDIUM ○ LARGE ○ **Traction:** LOW ○ MEDIUM ○ HIGH ○

Surface: SMOOTH ○ BUMPY ○ RUTTED ○ **Type:** LOOSE / LOAMY ○ HARD PACKED ○ BLUE GROOVE ○ CLAY ○ ASTRO ○

Condition: DUSTY ○ DRY ○ WET ○ MUDDY ○

Bumpsteer/Ackerman/Steering Stop:

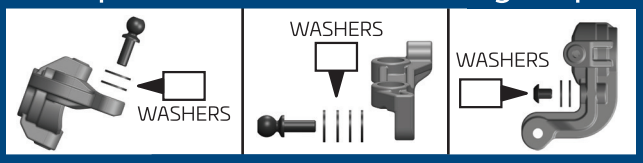

Front End:

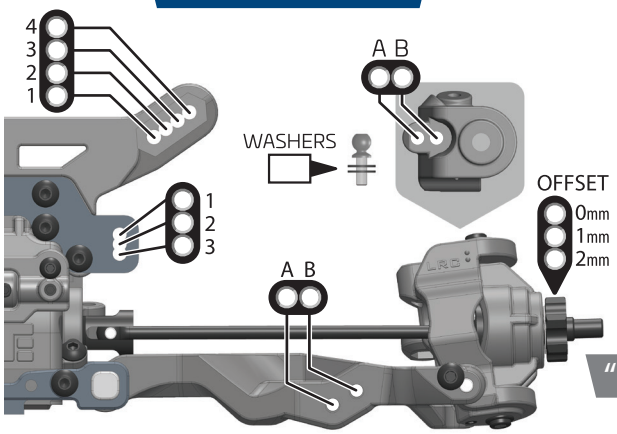

Suspension:

RIDE HEIGHT:	CAMBER:
CASTER:	SWEEP:
KICK UP:	TOE:
SWAY BAR:	DROOP:

Shocks:

OIL:	BRAND:
PISTON:	SPRING:
REBOUND:	BUILD:
STROKE:	

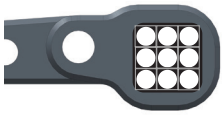

"A" Block:
(Arm Sweep)
(0° with center dot inserts)

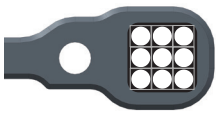

"B" Block:
(Kick-Up)
(10° with center dot inserts)

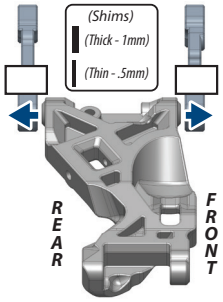

Rear End:

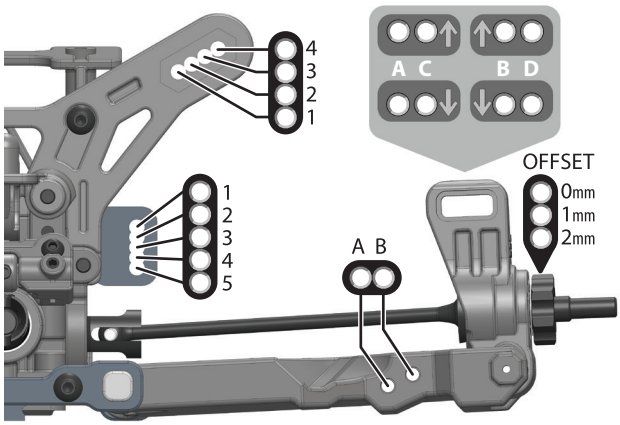

Suspension:

RIDE HEIGHT:	CAMBER:
ANTI-SQUAT:	TOE:
SWAY BAR:	DROOP:

Shocks:

OIL:	BRAND:
PISTON:	SPRING:
REBOUND:	BUILD:
STROKE:	

"C" Block:
(Anti-Squat)
(2° with center dot inserts)

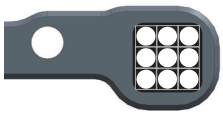

"D" Block:
(Rear Toe)
(2° with center dot inserts)

Rear Hub / Wheelbase:

(Roll Center)

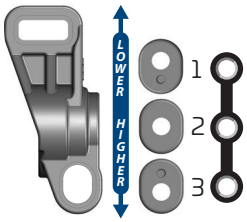

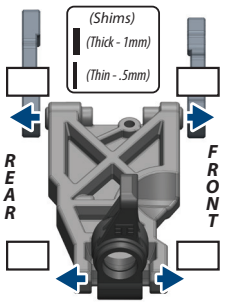

Wing:

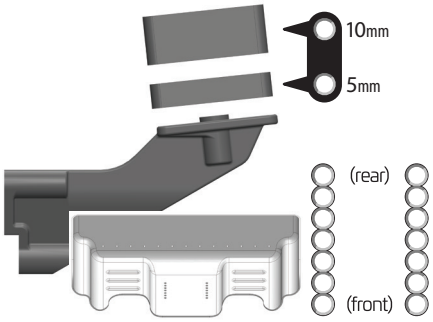

Differential Oil:

FRONT	CENTER	REAR
	/	/

Drivetrain:

PINION / SPUR: / (teeth)

Equipment:

MOTOR:

ESC:

BATTERY:

RADIO:

SERVO:

Chassis Braces:

REAR-SHORT: ○ REAR-LONG: ○

Tires / Wheels:

BRAND / TREAD:

COMPOUND:

INSERT:

WHEEL:

NOTES:

Body / Wing:

BODY MAKE:

WING MAKE:

Notes: