MSB1 1/10 2WD Electric Buggy

B2001 Ver. 2402

Driver : Anthony LopeZ
Date : September 11, 2025
Track :
Event :

Track Condition

Size :	Open ☐	Mid ☐	Tight ☐
Traction :	High ☐	Mid ☐	Low ☐
Condition :	Smooth ☐	Bumpy ☐	Dry ☐ Wet ☐
Surface :	Carpet ☐	Dirt ☐	Astroturf ☐

Front Suspension

Setup: My Base Setup

Open in So Dialed App

Ride Height : 15 mm

Camber : -2 deg

Toe : -1 deg

Anti-roll Bar : 0 mm

Front Bulkhead Spacer : Brass 8g

Notes :

Ackerman Position :
- -1 ☐
- -0.5 ☐
- 0 ☐
- 0.5 ☒
- 1 ☐

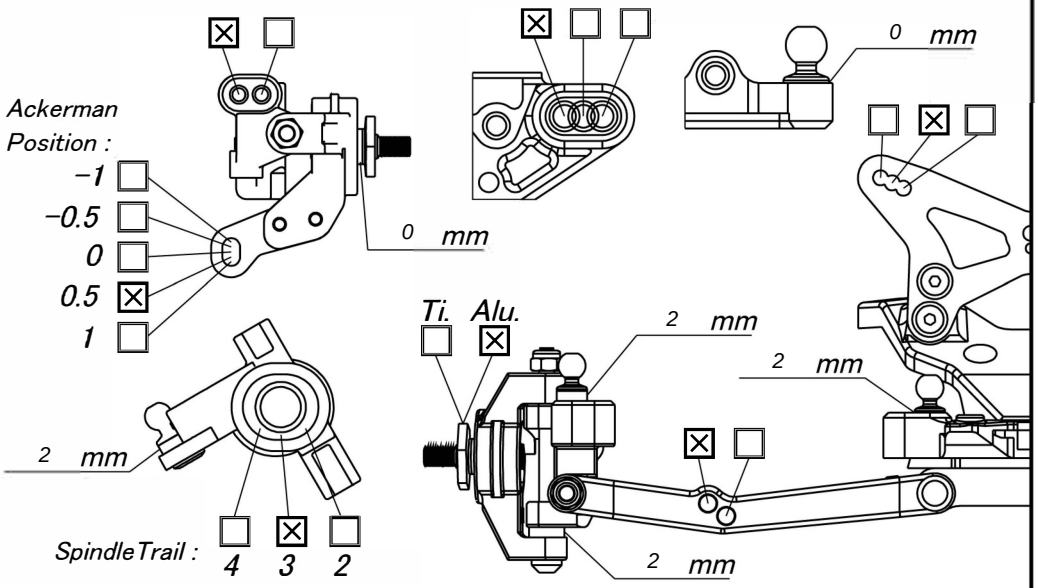

Rear Suspension

Ride Height : 17 mm

Camber : -2 deg

Anti-roll Bar : 0

Arm Position : Fwd ☒ Back ☐

Hub Position : Fwd ☐ Mid ☒ Back ☐

Notes :

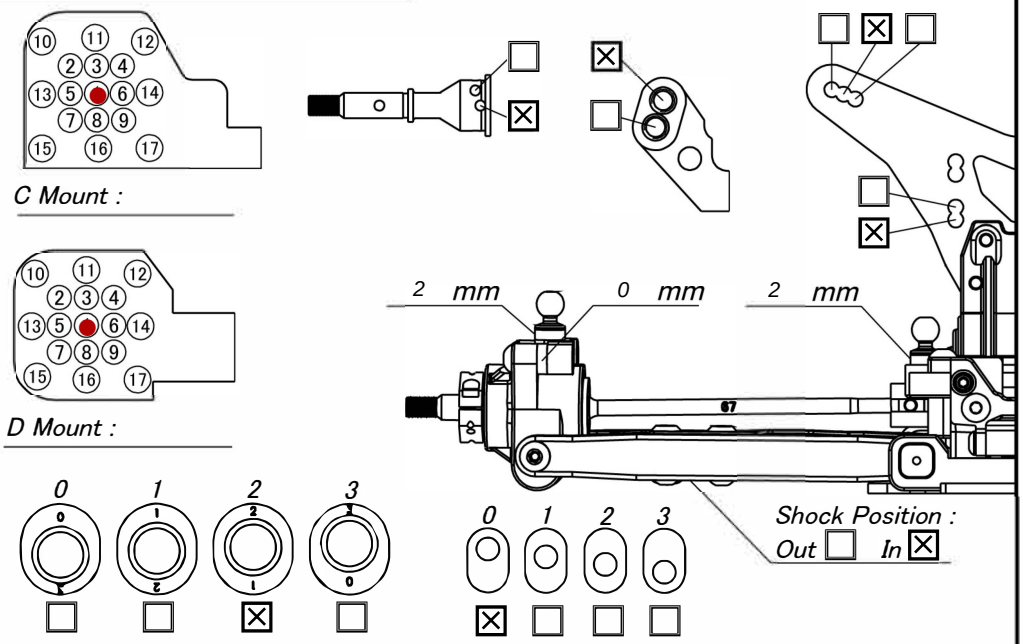

Shocks	Front	Rear
Piston :	2x1.9	1x1.6 2x1.8
Oil :	30 wt	27.5 wt
Spring :	1 up red	1 up gold
Length :	23.5	30
Limiters :	Int : 1 Ext : 0	Int : 0 Ext : 2
Eyelet Lenght :	Std ☒ +2 ☐	Std ☐ +2 ☒
Cup Offset :	Low ☐ Mid ☐ High ☒	Low ☒ Mid ☐ High ☐

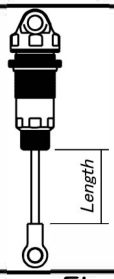

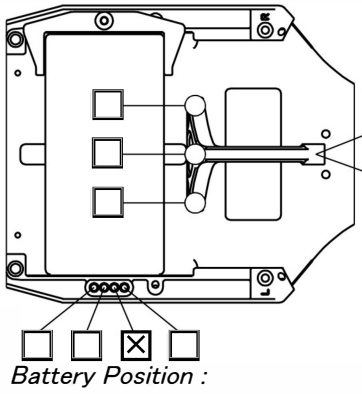

Chassis Brace Bush Type :
- ☐ Plastic
- ☒ Rubber

ESC Plate :
- ☐ Plastic
- ☐ Carbon
- ☐ Brass

Total Weight : g

Electronics

Radio :	Flysky
Servo :	Reefs
ESC :	Hobbywing
Motor :	Hobbywing
Gearing :	31 / 72
Battery :	Cayote / g

Weight

Servo Weight :	Yes ☐	No ☒
Battery Weight :	19g ☐	37g ☐

Differential

Gear Diff ☐	2 Gear ☐	Oil :	
	4 Gear ☐	Friction O-ring :	
Ball Diff ☐	Setting :		

Tire	Front	Rear
Type :	TZO	TZO
Compound :	Silver	Silver
Inserts :		
Wheel :	Mugen seiki	Mugen seiki
Additive :	Sk Platinum	Sk Platinum

Body & Wing

Body :	Standard		
Rear Wing :	Standard		
Wing Angle :	0° ☐	3° ☐	6° ☒
Front Wing :	Standard	Low : ☐	High : ☒