RC10 B7 TEAM KIT | RC10 B7D TEAM KIT

Driver: Benny | Event: Sverigecupen | Qualify: | Main:

Date: September 22, 2026 | Track: Amf Årsunda | Finish: | Best Lap Time:

Front Suspension:

Setup: My Base

Reset Forms

Ride Height:	16 mm
Camber:	-2 deg
Toe:	-1 deg
Anti-Roll Bar:	0 mm
Arm Type:	Standard
Tower Type:	Standard
Wheel Hex:	6.5 mm
Steering Block KPI:	2
Caster Block Insert:	0 ☐ +2.5 ■ +5 ☐
Bulkhead Type:	0 deg aluminum
Kick-Up Angle:	-2.5 ☐ 0 ■ +2.5 ☐
Steering Stop Spacing:	0 mm
Caster Block Spacing:	Fwd ■ Back ☐

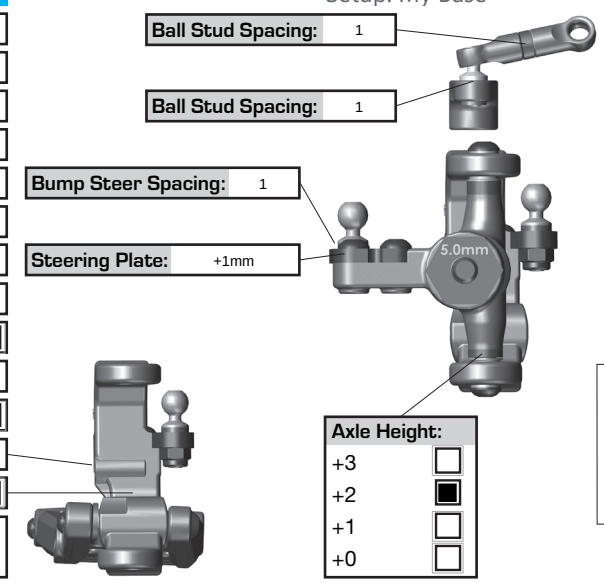

Axle Height:

+3	☐
+2	■
+1	☐
+0	☐

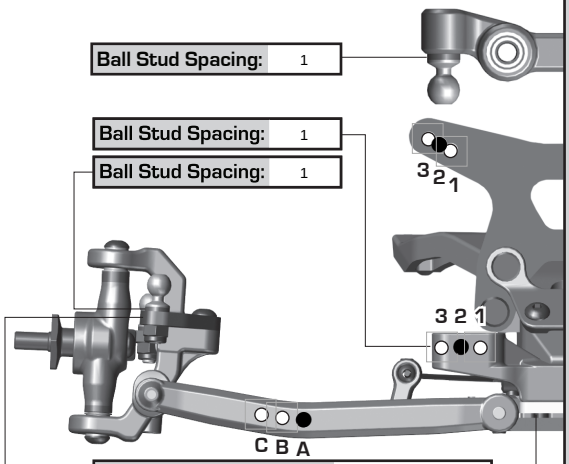

Caster Block Link Mount:	+0
Front Bulkhead Spacing:	1

Rear Suspension:

Ride Height:	19 mm
Camber:	-1 deg
Anti-Roll Bar:	0 mm
Arm Type:	Standard
Tower Type:	Standard
Arm Spacing:	Fwd ■ Mid ☐ Back ☐
Wheel Hex:	5 mm
Hub Type:	Standard
Hub Spacing:	Fwd ☐ Mid ■ Back ☐
Drive Shaft:	CVA's ■ Universals ☐

C Mount: Standard

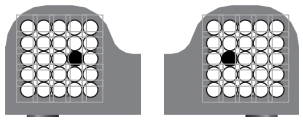

D Mount: Standard

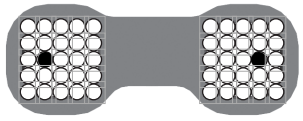

Axle Height:

▼0	3▲	+3
▼1	2▲	+2
▲1	2▼	+1
▲0	3▼	+0

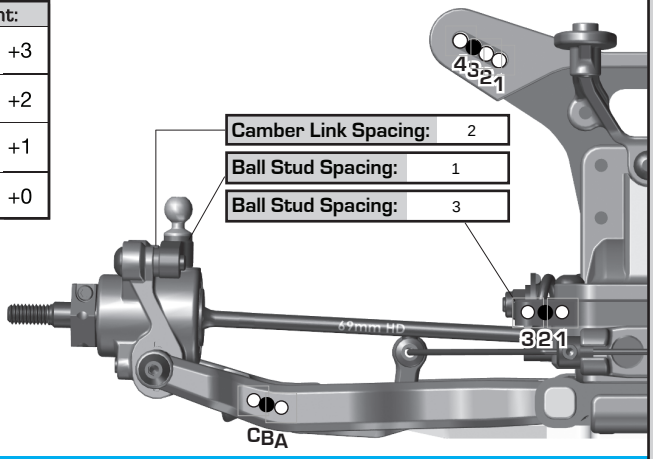

Electronics:

Radio:	Servo:
EPA: Throttle: %	Brake: %
ESC:	
ESC Settings:	
Motor / Wind:	Timing:
Pinion: 22	Spur: 78

Battery Mount: Std ■ Offset ☐



Back 1 ☐ 2 ☐ 3 ☐ 4 ☐ 5 ■ Forward

Battery:	Weight:
Notes:	

Drivetrain:

Differential:	Ball Diff: ☐
Height: 2 mm	Gear Diff: ■
Diff Setting: 5,000 cst	
Notes:	

Slipper Clutch:

Type:	Slipper
# of Pads:	2 x 19mm
Setting:	

Shocks:

	Front	Rear
Piston:	2.5mm 2x1.7mm holes	2.5mm 2x1.9mm holes
Thickness:		
Fluid:	35 wt	27.5 wt
Spring:	3.6lb Blue	2.0lb Gray
Limiters:	Int: 0 Ext: 4	Int: 0 Ext: 3
Stroke:	23 mm	29 mm
Eyelet:	0 mm	+2 mm
Cup Offset:	0 ☐ +5 ■ +9 ☐	0 ■ +5 ☐ +9 ☐



Kashima Bodies: ☐ Chrome Shafts: ☐ Machined Spacers: ☐

Notes:

Track Info:

Size:	Medium
Surface:	Outdoor astroturf
Traction:	Medium
Moisture:	Dry
Condition:	Bumpy
Temperature:	23C/73F
Notes:	

Tires:

Front Tires:	Axium
Front Compound:	Purple
Front Insert:	
Rear Tires:	Messo
Rear Compound:	Gul
Rear Insert:	
Wheel (F/R):	6mik Schumacher
Notes:	

Body, Weight:

Body:	B7
Front Wing:	B7
Rear Wing:	B7 7\"
Wing Angle:	0° ☐ 3° ☐ 6° ■
Chassis Length:	B7 +0mm
Servo Weights:	
Electronic Weights:	0
Total Vehicle Weight:	1492 g

Vehicle Comments:

:: For more setups, visit https://www.associatedelectrics.com/teamassociated/manuals_and_setup_sheets/