MSB1 1/10 2WD Electric Buggy

B2001 Ver. 2402

Driver : Chris Payne
Date : May 7, 2025
Track : MHORC
Event : Club racing

Track Condition
Size : Open ☐ Mid ☐ Tight ☒
Traction : High ☒ Mid ☒ Low ☐
Condition : Smooth ☒ Bumpy ☒ Dry ☒ Wet ☒
Surface : Indoor clay

Front Suspension

Setup: MHORC March- Tight track, high grip clay

Open in So Dialed App

Ride Height : 17.5 mm

Camber : -1.5 deg

Toe : -0.5 deg

Anti-roll Bar : 0 mm

Front Bulkhead Spacer : 2mm

Notes :
Brass bulkhead shim1mm+1mm

Ackerman Position :
-1 ☐
-0.5 ☐
0 ☐
0.5 ☒
1 ☐

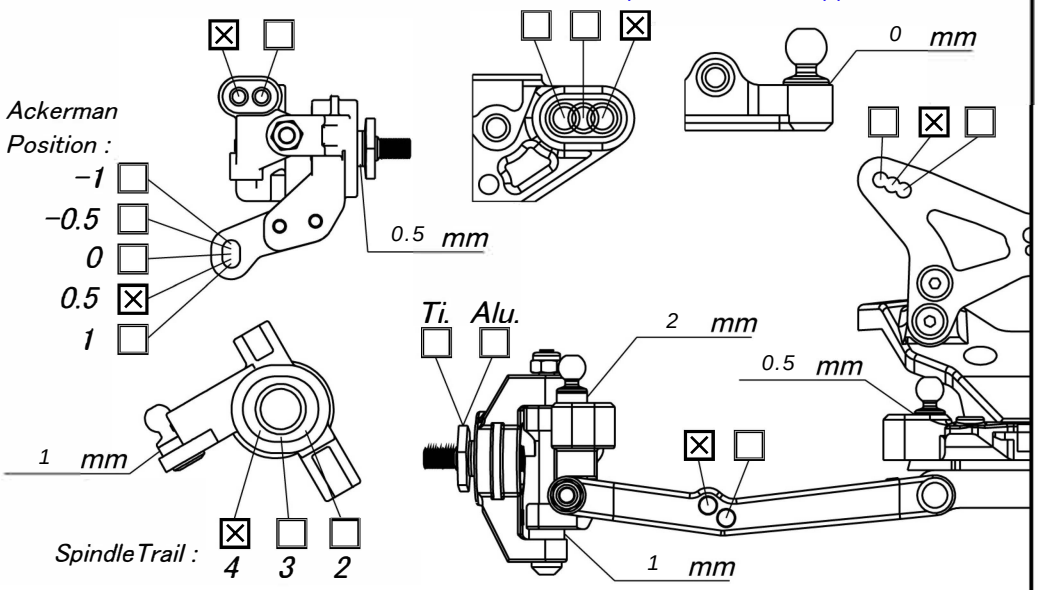

Rear Suspension

Ride Height : 17.5 mm

Camber : -1.5 deg

Anti-roll Bar : 0

Arm Position : Fwd ☒ Back ☐

Hub Position : Fwd ☐ Mid ☒ Back ☐

Notes :
Ball diff tight~370
R1 Slipper plates
R1 Carbon pads19mm OD
R1 captured pins x3
R1 Standoffs 10mm
R1 Ti screws
Ti axles
R1 Ceramic bearings
17.5 Gearing 72/28

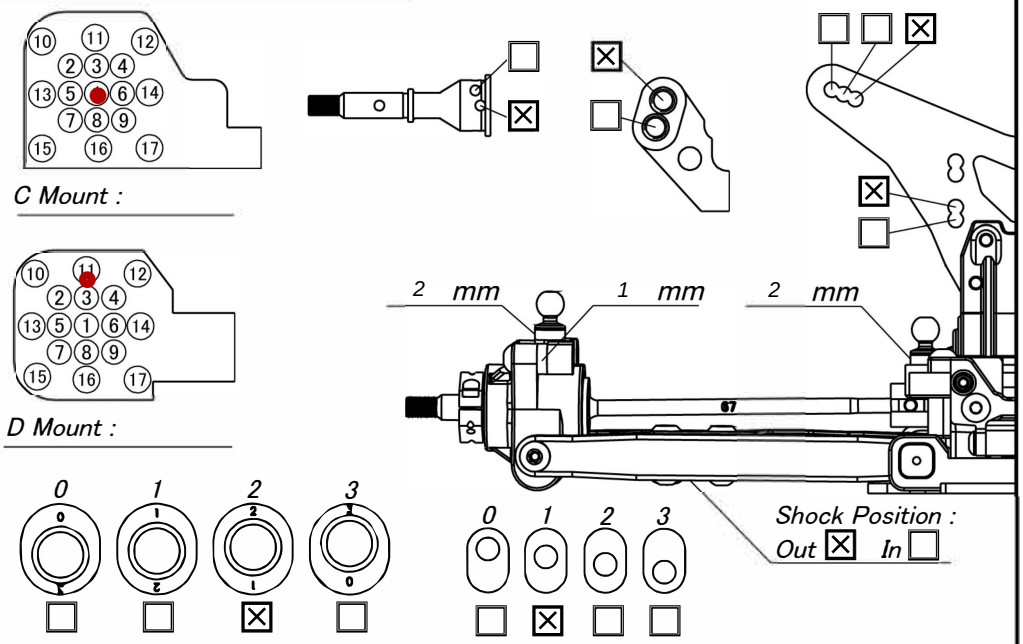

Shocks

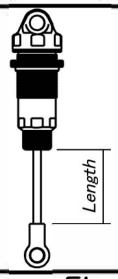

	Front	Rear
Piston :	2.5MM 1.8x1.7	2.5mm 1.8x2
Oil :	375CST	325CST
Spring :	2 dot	1up Gold
Length :	24	30
Limiters :	Int : 0 Ext : 0.5	Int : 0 Ext : 0
Eyelet Lenght :	Std ☒ +2 ☐	Std ☒ +2 ☐
Cup Offset :	Low ☐ Mid ☒ High ☐	Low ☒ Mid ☐ High ☐

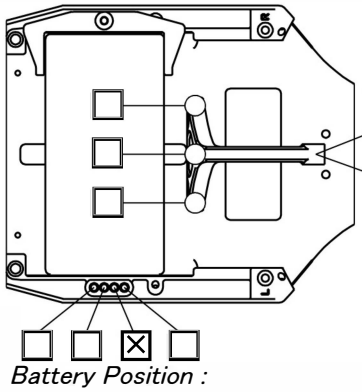

Chassis Brace Bush Type :
☒ Plastic
☐ Rubber

ESC Plate :
☐ Plastic
☒ Carbon
☐ Brass

Battery Position : ☐ ☐ ☒ ☐

Total Weight : 1510 g

Electronics

Radio :	
Servo :	R1 DD4
ESC :	R1 MOD Digital 3
Motor :	R1 HD 17.5 HT rotor
Gearing :	29 / 72
Battery :	R1 / g

Weight

Servo Weight :	Yes ☐	No ☒
Battery Weight :	19g ☐	37g ☐

Differential

Gear Diff ☐	2 Gear ☐	Oil :	FP Diff Grease
	4 Gear ☐	Friction O-ring :	2
Ball Diff ☐	Setting :		

Tire	Front	Rear
Type :	Smoothie 2	Smoothie 2
Compound :	Silver	Silver
Inserts :	RM2	RM2
Wheel :	Mugen	Mugen
Additive :	TDK GEN 2	TDK GEN 2

Body & Wing

Body :	JC F2 LW		
Rear Wing :	7 in		
Wing Angle :	0° ☐	3° ☐	6° ☒
Front Wing :	None	Low : ☐	High : ☐