XPRESS EXECUTE XQ11 SET-UP SHEET

Setup: XQ11 HR - Cotswolds - Club day
Open in So Dialed App

Driver	Mark Raddenbury	Track Surface				Track Temperature	28C/82F
Date	August 19, 2025	Track Traction	Medium	Result	5	Air Temperature	23C/73F
Track	Cotswolds Model Car Club	Country		Best Lap	18.69	Humidity	Dry
Remark							

Front

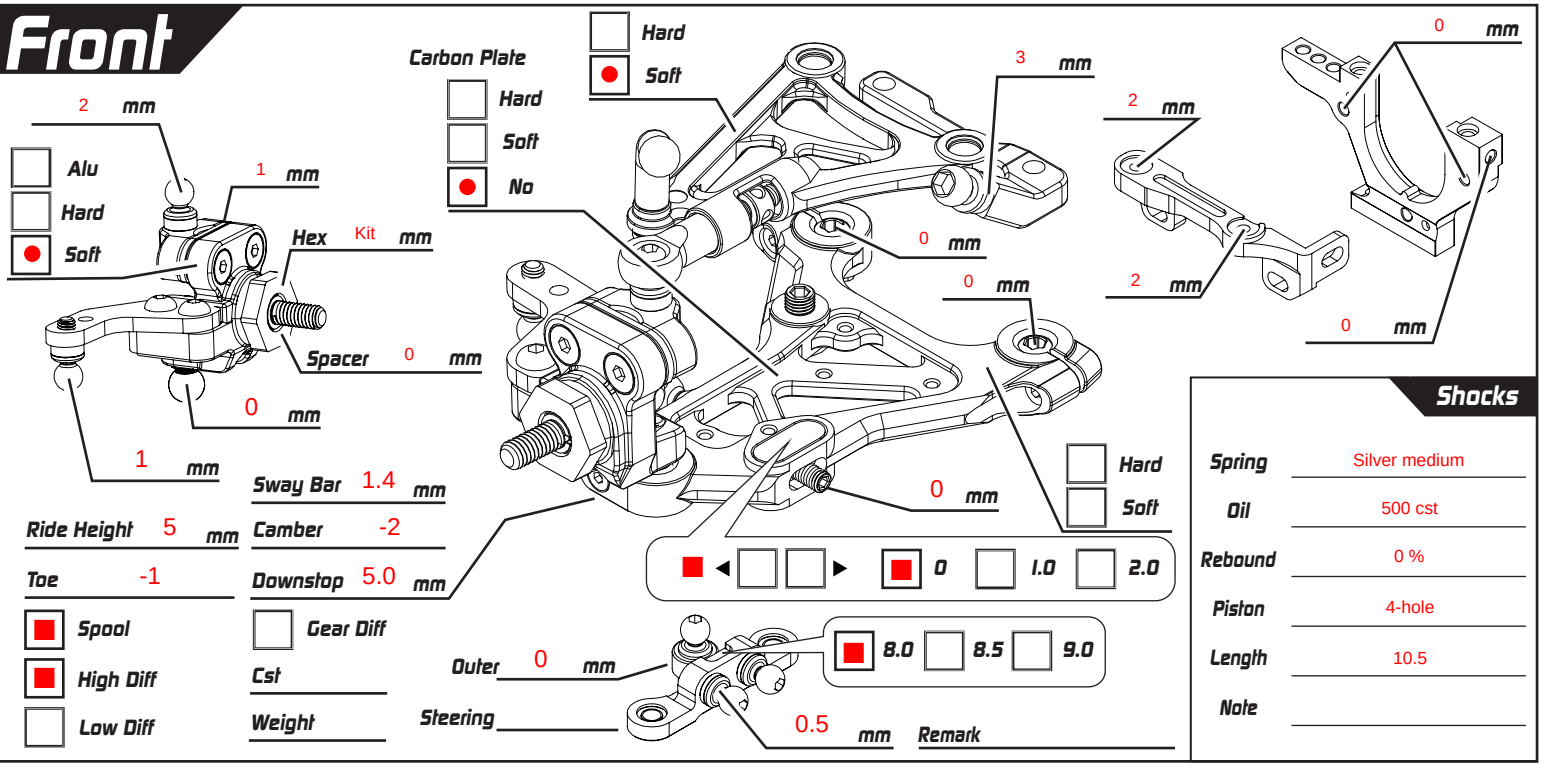

Sway Bar	1.4 mm	Ride Height	5 mm
Camber	-2	Toe	-1
Downstop	5.0 mm	Spool	■
Gear Diff		High Diff	■
Cst		Low Diff	
Weight		Remark	

Shocks

Spring	Silver medium
Oil	500 cst
Rebound	0 %
Piston	4-hole
Length	10.5
Note	

Rear

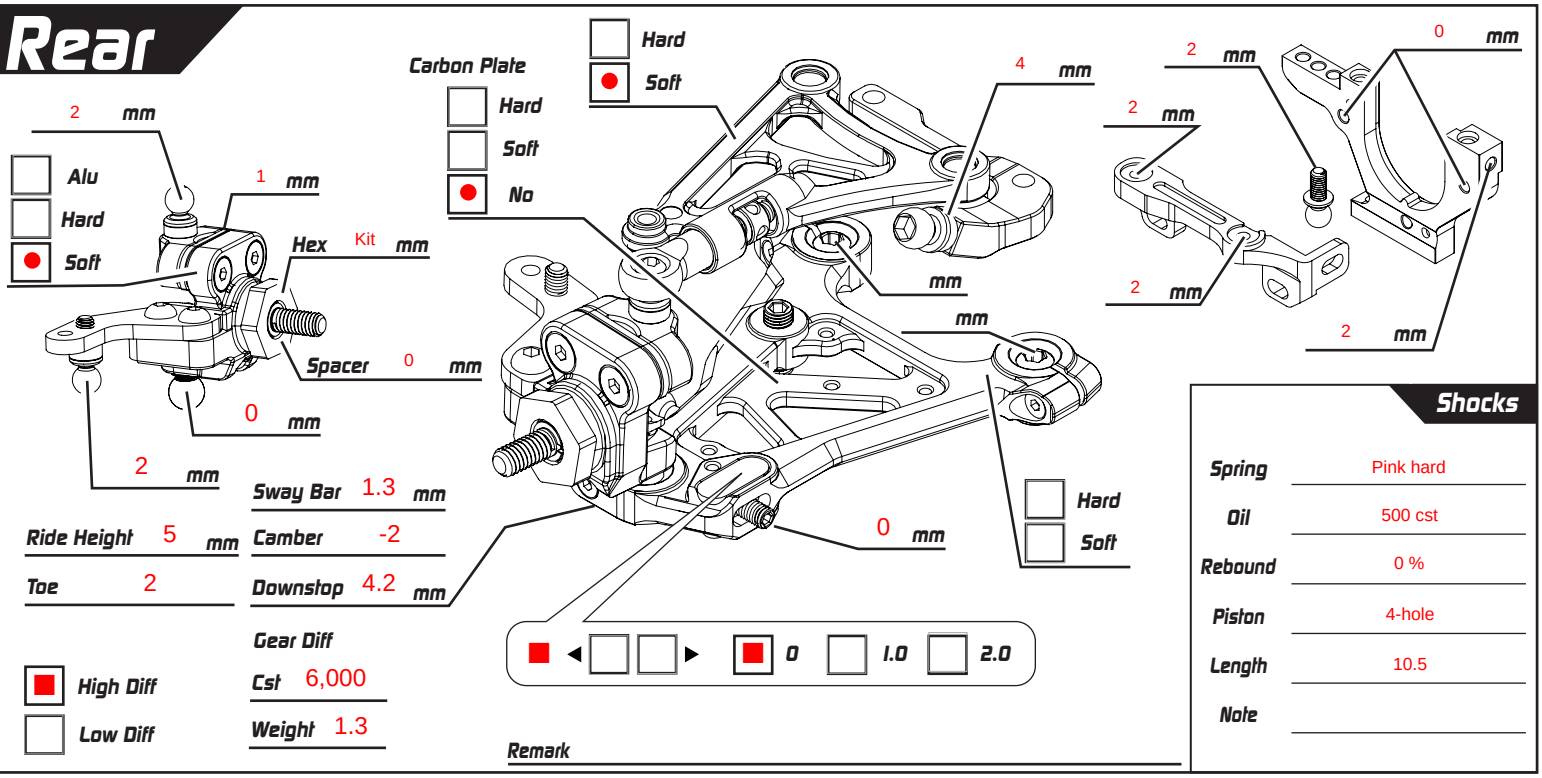

Sway Bar	1.3 mm	Ride Height	5 mm
Camber	-2	Toe	2
Downstop	4.2 mm	Gear Diff	
High Diff	■	Cst	6,000
Low Diff		Weight	1.3
Remark			

Shocks

Spring	Pink hard
Oil	500 cst
Rebound	0 %
Piston	4-hole
Length	10.5
Note	

Weight g

Battery

Body Hellcat

Tires Team Powers 34

Additive MR33 Carpet

Weight g

Carbon

Alu

Weight g

ESC Hobbywing

Motor Hobbywing

Servo Horn Height 8 mm

Spur 48 P/ 70 T

Servo Ludicrous

Pinon P/ 40 T
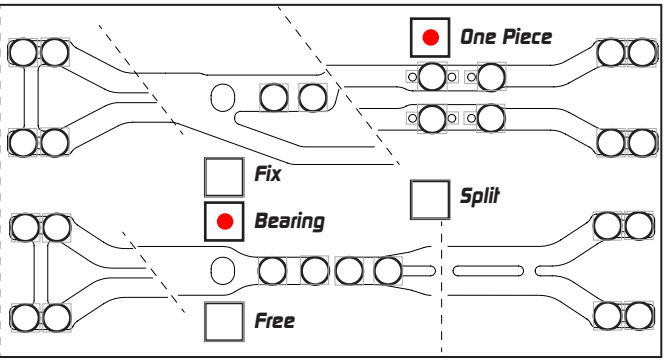
FDR 3.32