RC10 B7 TEAM KIT | RC10 B7D TEAM KIT

Driver: Marvin Brannon | Event: | Qualify: | Main:

Date: October 16, 2025 | Track: | Finish: | Best Lap Time:

Front Suspension:

Setup: My Bas

Reset Forms

Ride Height:	19 mm
Camber:	-1 deg
Toe:	0 deg
Anti-Roll Bar:	
Arm Type:	Standard
Tower Type:	Standard
Wheel Hex:	5 mm
Steering Block KPI:	2
Caster Block Insert:	0 ☐ +2.5 ■ +5 ☐
Bulkhead Type:	0 deg aluminum
Kick-Up Angle:	-2.5 ☐ 0 ■ +2.5 ☐
Steering Stop Spacing:	0 mm
Caster Block Spacing:	Fwd ■ Back ☐

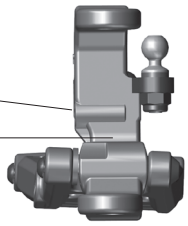

Ball Stud Spacing: 1

Ball Stud Spacing: 0

Bump Steer Spacing: 0

Steering Plate: +1mm

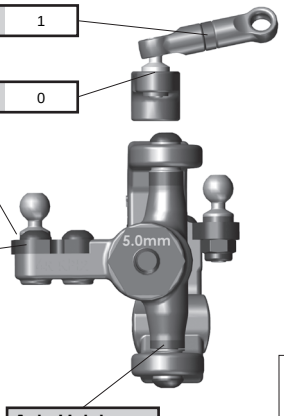

Axle Height:

+3	☐
+2	☐
+1	■
+0	☐

Steering Bellcrank Position: Up ■ Down ☐

Ball Stud Spacing: 1

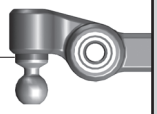

Ball Stud Spacing: 1

Ball Stud Spacing: 2

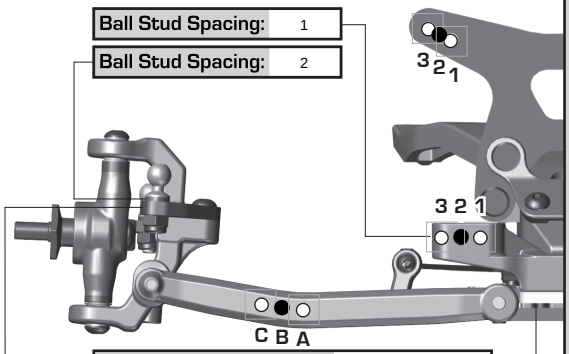

Caster Block Link Mount: +0

Front Bulkhead Spacing: 1

Rear Suspension:

Ride Height:	19 mm
Camber:	-1 deg
Anti-Roll Bar:	
Arm Type:	Standard
Tower Type:	Standard
Arm Spacing:	Fwd ☐ Mid ■ Back ☐
Wheel Hex:	5 mm
Hub Type:	Standard
Hub Spacing:	Fwd ☐ Mid ■ Back ☐
Drive Shaft:	CVA's ■ Universals ☐

C Mount: Standard

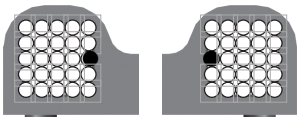

D Mount: Standard

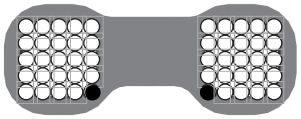

Axle Height:

▼0	3▲	+3
▼1	2▲	+2
▲1	2▼	+1
▲0	3▼	+0

Camber Link Spacing: 2

Ball Stud Spacing: 1

Ball Stud Spacing: 2

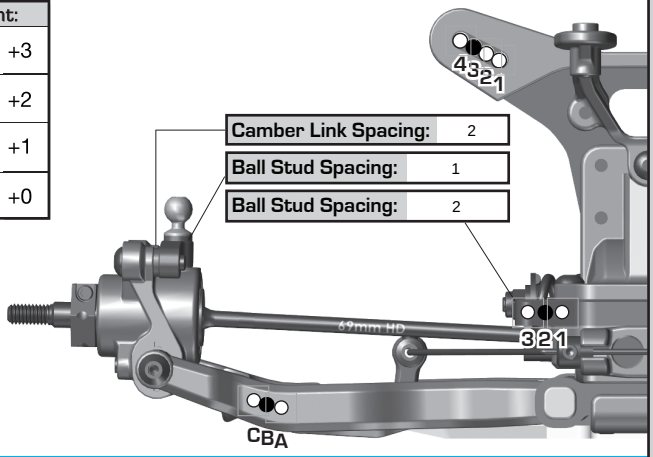

Electronics:

Radio:	
Servo:	
EPA:	Throttle: % Brake: %
ESC:	
ESC Settings:	
Motor / Wind:	
Timing:	
Pinion:	
Spur:	78
Battery Mount:	Std ■ Offset ☐

Back 1 ■ 2 ☐ 3 ☐ 4 ☐ 5 ☐ Forward

Battery:	
Weight:	
Notes:	

Drivetrain:

Differential:	Ball Diff: ■
Height: 1 mm	Gear Diff: ☐
Diff Setting:	
Notes:	

Slipper Clutch:

Type:	Slipper
# of Pads:	2 x 19mm
Setting:	

Shocks:

	Front	Rear
Piston:	2.5mm 2x1.8mm holes	2.5mm 2x1.9mm holes
Thickness:		
Fluid:	30 wt	30 wt
Spring:	3.4lb Gray	1.9lb White
Limiters:	Int: ____ Ext: ____	Int: ____ Ext: ____
Stroke:	23 mm	28 mm
Eyelet:	+2 mm	+4 mm
Cup Offset:	0 ☐ +5 ■ +9 ☐	0 ■ +5 ☐ +9 ☐

Kashima Bodies: ☐ Chrome Shafts: ☐ Machined Spacers: ☐

Notes:

Track Info:

Size:	
Surface:	
Traction:	
Moisture:	
Condition:	
Temperature:	
Notes:	

Tires:

Front Tires:	
Front Compound:	
Front Insert:	
Rear Tires:	
Rear Compound:	
Rear Insert:	
Wheel (F/R):	
Notes:	

Body, Weight:

Body:	B7
Front Wing:	B7
Rear Wing:	B7 7\"
Wing Angle:	0° ☐ 3° ☐ 6° ■
Chassis Length:	B7 +0mm
Servo Weights:	
Electronic Weights:	11g Aluminum
Total Vehicle Weight:	

Vehicle Comments:

:: For more setups, visit https://www.associatedelectrics.com/teamassociated/manuals_and_setup_sheets/