XPRESS EXECUTE XQII

Setup: My Base Setup
Full details in app: sodialed.com/s/ir3i

SET-UP SHEET

Driver: Tim Wombat Liu
Track Surface:
Track Temperature:
Date: October 8, 2024
Track Traction:
Result:
Air Temperature:
Track:
Country:
Best Lap:
Humidity:
Remark:

Front

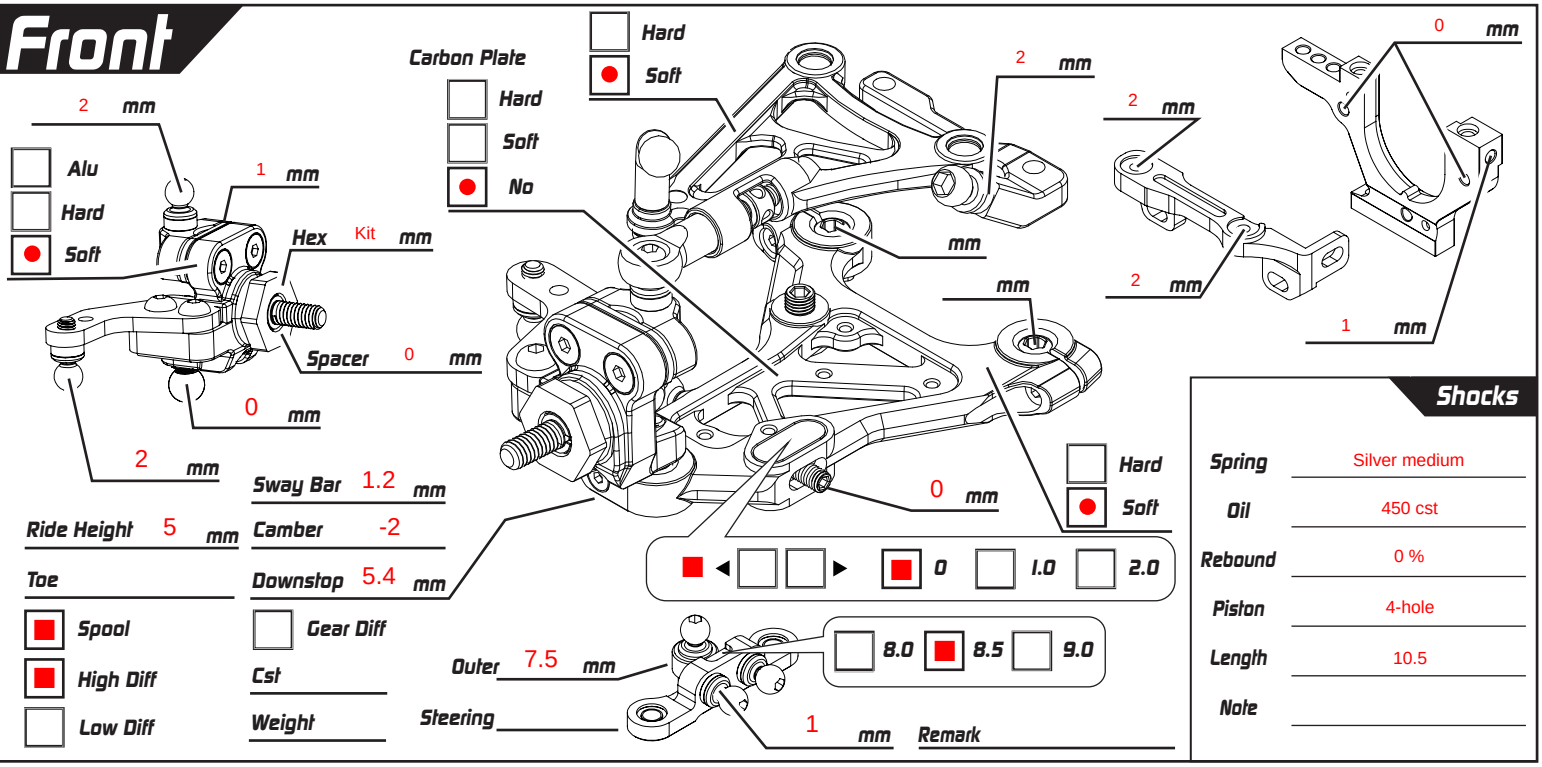

Sway Bar 1.2 mm
Ride Height 5 mm
Camber -2
Toe
Downstop 5.4 mm
Spool
High Diff
Low Diff
Gear Diff
Cst
Weight
Outer 7.5 mm
Steering
Remark

Shocks

Spring	Silver medium
Oil	450 cst
Rebound	0 %
Piston	4-hole
Length	10.5
Note	

Rear

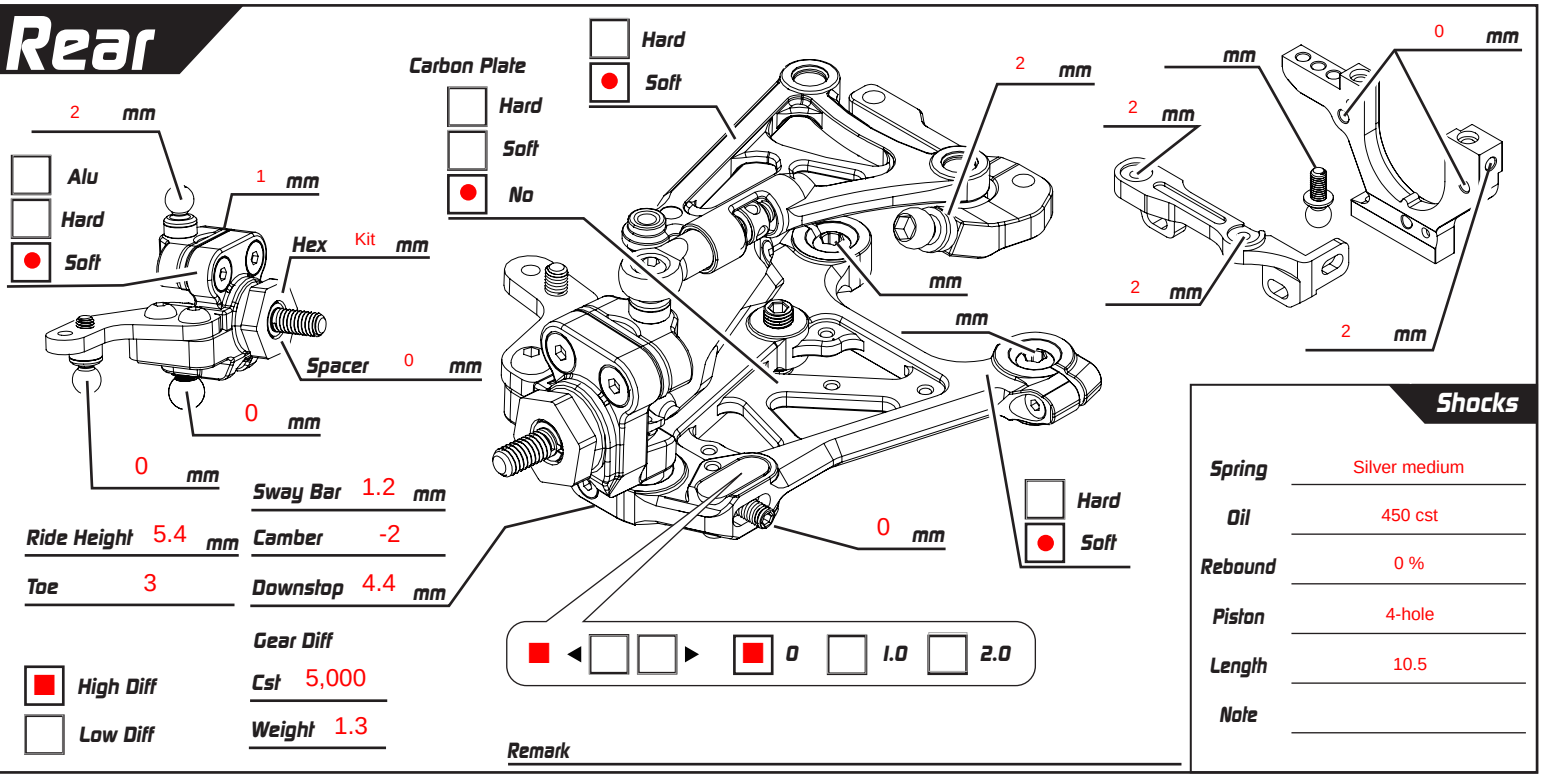

Sway Bar 1.2 mm
Ride Height 5.4 mm
Camber -2
Toe 3
Downstop 4.4 mm
Gear Diff
High Diff
Low Diff
Cst 5,000
Weight 1.3
Remark

Shocks

Spring	Silver medium
Oil	450 cst
Rebound	0 %
Piston	4-hole
Length	10.5
Note	
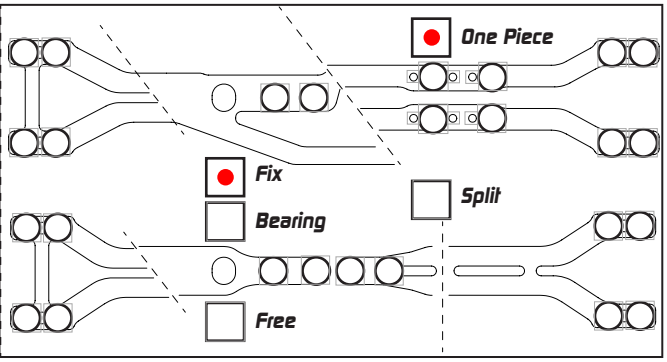
Weight g
Battery
Body
Weight g
Tires
Additive
Carbon
Alu
Servo Horn Height mm
ESC
Motor
Spur 64 P/ 110 T
Servo
Weight g
Weight g
Pinon P/ T
FDR NaN