SET-UP SHEET

X12'23 SET-UP SHEET VER.1 ©XRAY **XRAY X12'23 US&EU**

RACE	
TRACK	Indoortrack.ch
NAME	Vital
DATE	October 30, 2025

QUAL POSITION	FINAL POSITION	BEST LAPTIME	LAPS	TIME
		/sec	/	

TRACK

TRACK SURFACE	☐ CARPET	☐ ASPHALT	
TRACK LAYOUT	☐ TECHNICAL	☐ MIXED	☐ FAST
TRACTION	☐ LOW	☐ MEDIUM	☐ HIGH

CENTER SHOCK ABSORBER

CENTER SHOCK OIL	450 cst	/cSt
CENTER SHOCK REBOUND	25 %	/%
CENTER SHOCK SPRING	2.1C Black	/C

SIDE DAMPING

OIL 10,000 /cSt

TIRES

FRONT	TIRES	REAR
CONTACT Moosgummi	TIRES TYPE	CONTACT Moosgummi
44	DIAMETER /mm	46
CS-RACING High Grip	ADDITIVE	CS-RACING High Grip
15 oder so m	ADDITIVE TIMING	15 oder so m

FRONT LEFT | FRONT RIGHT | ADDITIVE TREATED AREA | REAR LEFT | REAR RIGHT

TRANSMISSION

BALL DIFF	GEAR DIFF	SOLID AXLE
☒	☐	☐
☐ LOOSE ☐ ☐ MEDIUM ☒ ☐ TIGHT	OIL /cSt	

GEARING

PINION / T		SPUR GEAR/T	80
FINAL DRIVE RATIO		ROLLOUT	

ELECTRONICS

MOTOR	
SPEEDO	
SERVO	
BATTERIES	

BODY

TYPE	

COMMENTS: Setup: Teppich 1 sehr gut

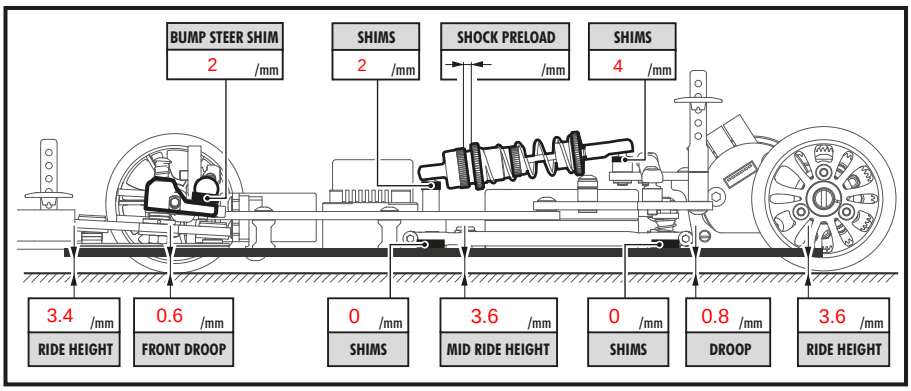

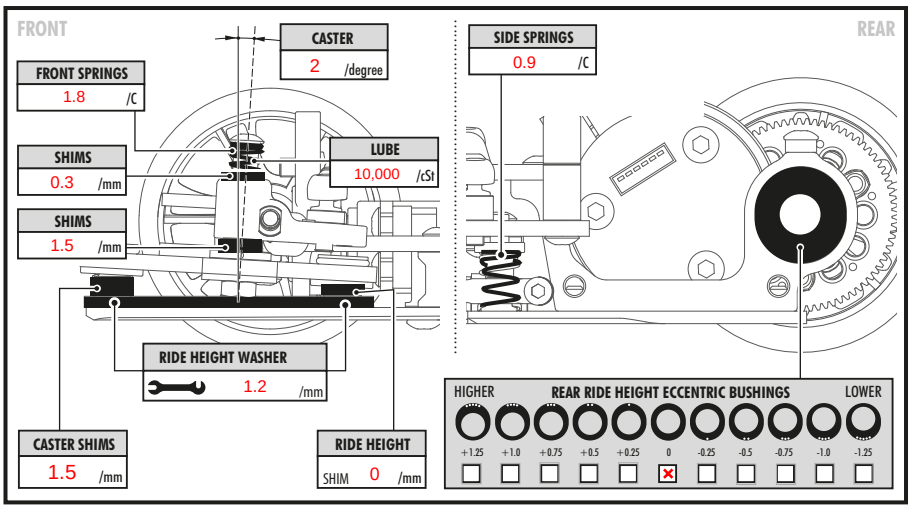

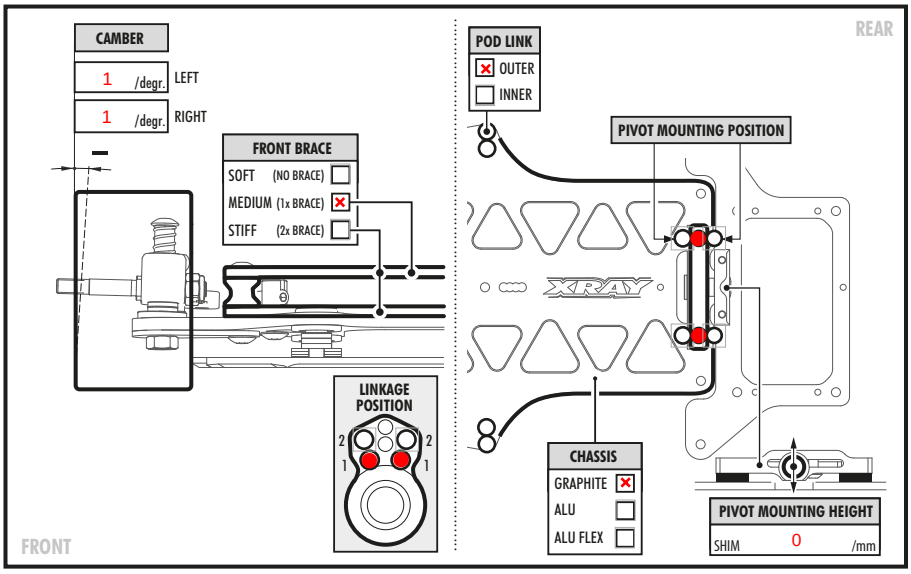

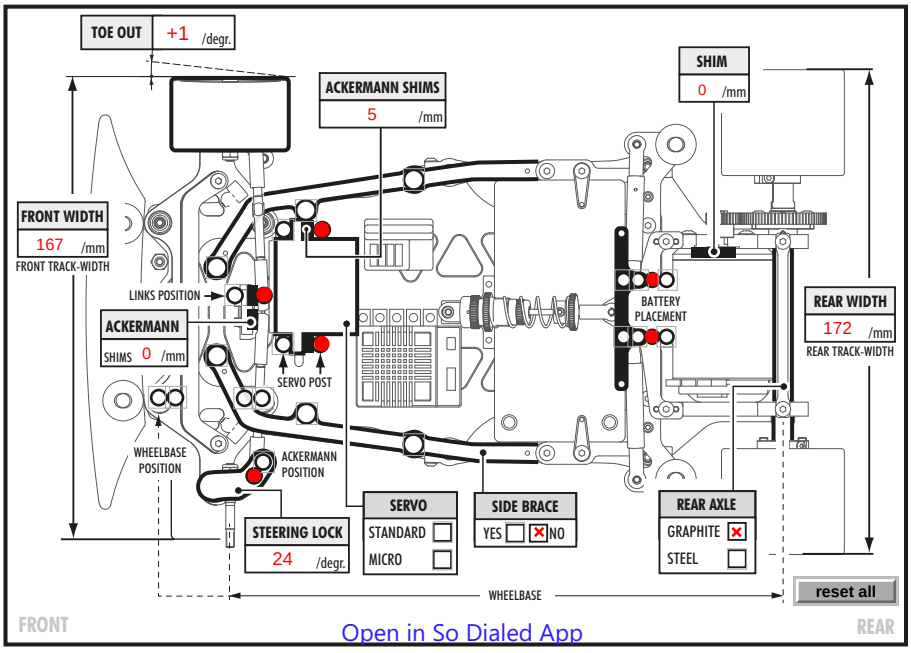

Open in So Dialed App