Name: Wesley Knapp	Date: September 27, 2026	Event: Black Friday Trophy Race	Track: RC Madness

Track Conditions

☑ Indoor	☐ Clay	☑ Carpet	☑ Tight	☑ Smooth	☐ Hard Packed	☐ Blue Groove	☐ Wet	Bite: ☑ Low ☑ Med ☐ High	Setup: AC
☐ Outdoor	☐ Dirt	☐ Astro	☑ Open	☑ Rough	☐ Loose/Loamy	☑ Dry	☐ Dusty	Tread: ☐ Pin ☐ Ghost ☐ Slicks	Open in So Dialed App

Front Suspension

Ride Height	13
Camber	-2.5
Toe	+0.5
Sway Bar	1.3 mm

Titanium Turnbuckles
Ceramic Bearings

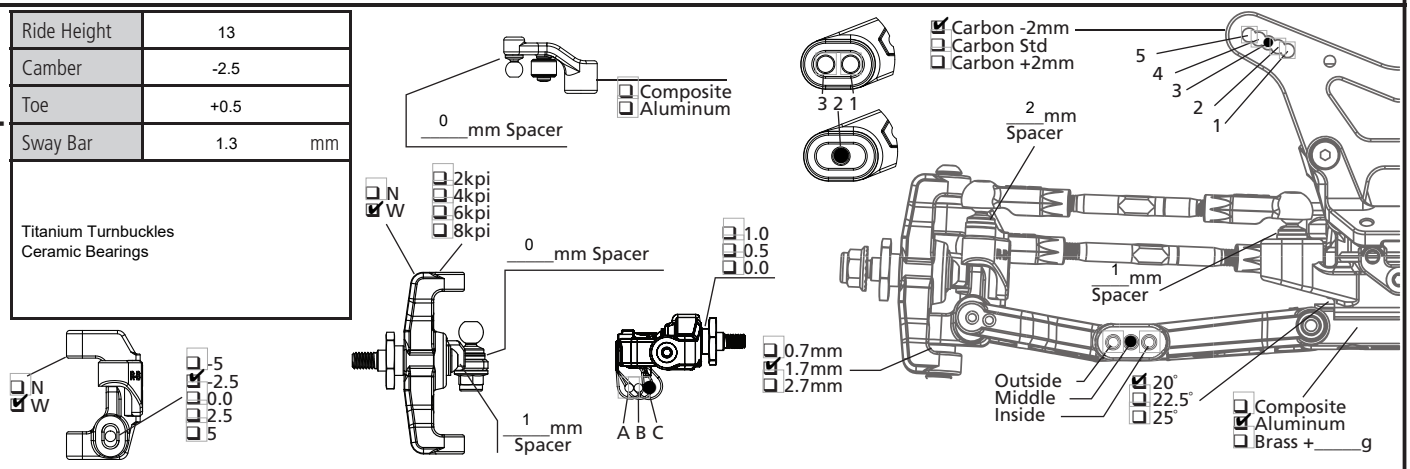

Rear Suspension

Ride Height	13
Camber	-2.5
Sway Bar	1.5 mm

Avid -2 C Block
HRC Rear Hubs 0 Height
Rear Shock Eyelet is 0

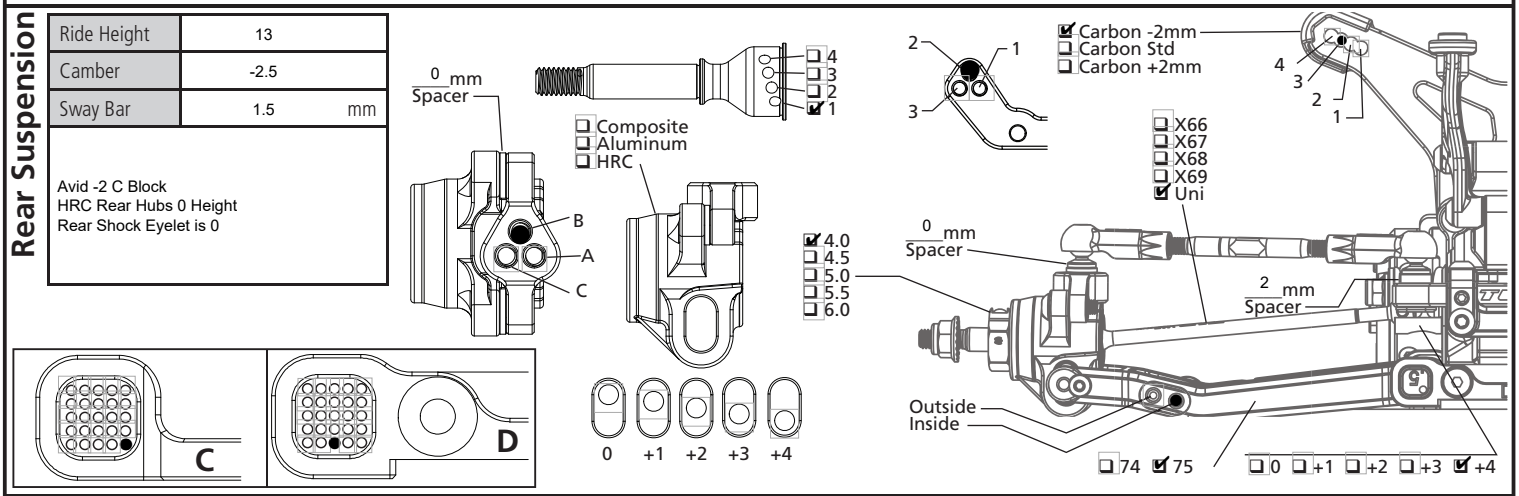

Chassis

Drive Train

Diff Type	☐ Ball Diff ☑ Gear Diff
Setting/Fluid	100,000
Internal Gears	☑ Steel ☐ Composite
Planet Gears	☑ 2 ☐ 4
Slipper	☑ Slipper ☐ Direct Drive

Aerodynamics

Body	Kit
Fr Wing	Kit
Rr Wing	PL Air Force 7-inch
Wicker	2nd line
Angle	0 deg
Notes	

Tires

	Front	Rear
Brand		
Tread		
Compound		
Insert		
Sauce		
Wheel		
Notes		

Shocks

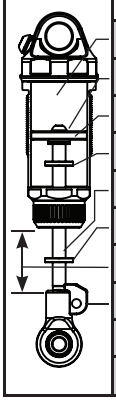

	Front	Rear
Oil	525 cst	425 cst
Piston Holes	3 x 1.5 VRP	3 x 1.6 VRP
Piston	☐ 2mm ☑ 2.5mm	☐ 2mm ☑ 2.5mm
Limiter, Int	4 mm	3 mm
Shaft Dia	☑ 3.0mm ☐ 3.5mm	☑ 3.0mm ☐ 3.5mm
Limiter, Ext	2 mm	0 mm
Stroke	21.5 mm	27.5 mm
Eyelet	☑ Std ☐ +2mm	☐ Std ☑ +2mm
Spring	AEROX Black Responsive	AEROX Blue Responsive
Spring Cup	☐ Low ☑ Mid ☐ High	☑ Low ☐ Mid ☐ High

Electronics

Radio		ESC	
Servo		Thro Prof	
Battery		Timing Adv	
Battery Wt	g	Initial Brake	
Motor		Drag Brake	
Gearing	32 / 72	Thr/Bra EPA	/

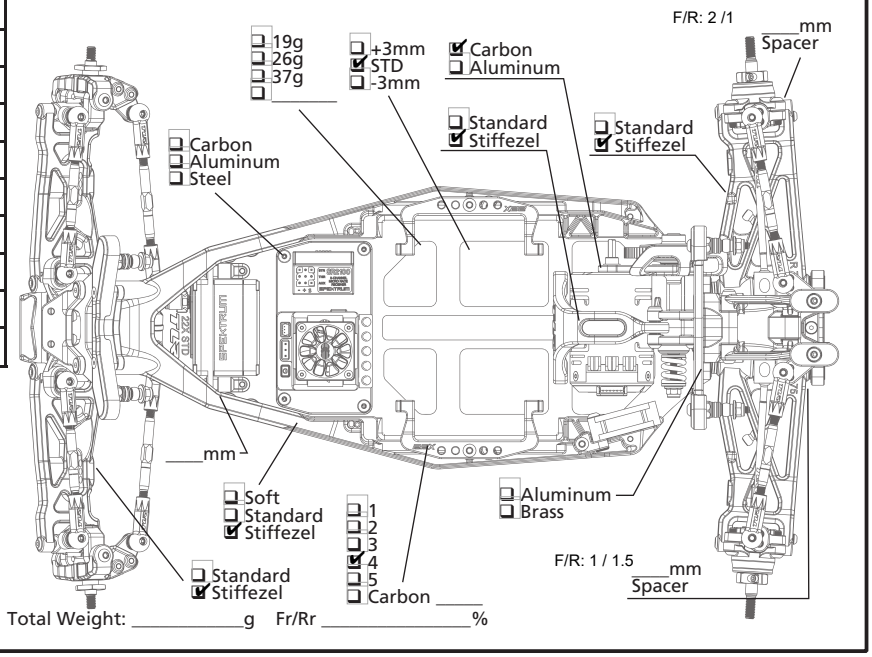

Total Weight: _____g Fr/Rr _____%