TEKNO RC — Setup Sheet — EB48 2.2

Open in So Dialed App

Setup: My Base Setup

Name: Wesley Knapp **Date:** January 31 **Event:** Club Racing **Ambient Temp:**

Track: INDOOR ○ OUTDOOR ◉ **Size:** SMALL ○ MEDIUM ◉ LARGE ○ **Traction:** LOW ◉ MEDIUM ◉ HIGH ○

Surface: SMOOTH ○ BUMPY ○ RUTTED ◉ **Type:** LOOSE / LOAMY ◉ HARD PACKED ○ BLUE GROOVE ○ CLAY ○ ASTRO ○

Condition: DUSTY ◉ DRY ○ WET ○ MUDDY ○

Ackerman/Bumpsteer/Arm Plate/Spindle Height/Servo Saver





WASHERS: 0

PLATE: A B C E F G H





SPINDLE PART#
TKR9141 (+1,0)
TKR9141B (-1, -2)



FULL TURNS FROM FULLY TIGHT

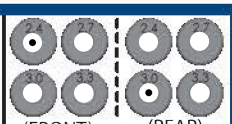

(FRONT) (REAR) SWAY BAR BUSHINGS

Front End:

TOWER 2.2

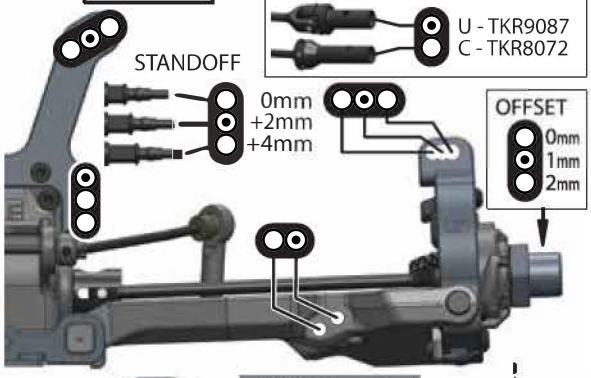

Suspension:

RIDE HEIGHT:	24	CAMBER:	-2
CASTER BLOCK:	21 deg	SWEEP:	0
KICK UP:	10	TOE:	-2
SWAY BAR:	2.0mm	SHOCK LENGTH:	115.5
UP TRAVEL LIMITERS:	+2 Shock Eyelet	DROOP:	0
OIL:	500 cst	BRAND:	Tekno
PISTON:	MIP 1.5/1.6mm HF	SPRING:	83mm 3.59lb Yellow
REBOUND:	0 %	BUILD:	Emulsion



"A" Block:
TKR9161 (0mm)
TKR9161B (-1mm)



"B" Block:
TKR9162 (0mm)
TKR9162B (-1mm)

Rear End:

TOWER 2.2

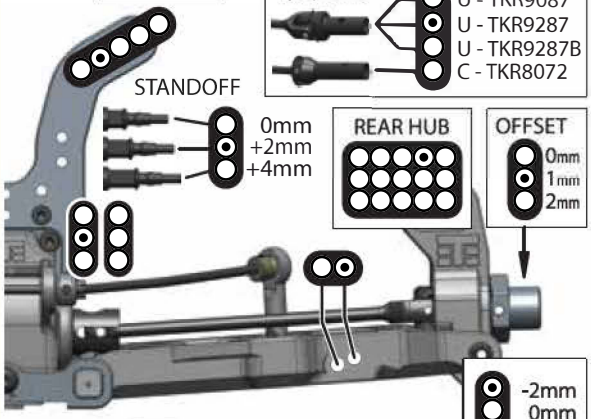

Suspension:

RIDE HEIGHT:	26	CAMBER:	-2
ANTI-SQUAT:	2	TOE:	2.5
SWAY BAR:	2.4mm	SHOCK LENGTH:	125
UP TRAVEL LIMITERS:	+4 Shock Eyelet	DROOP:	-4
OIL:	500 cst	BRAND:	
PISTON:	MIP 6x1.5mm HF	SPRING:	78mm 3.59lb Yellow
REBOUND:	0 %	BUILD:	Emulsion

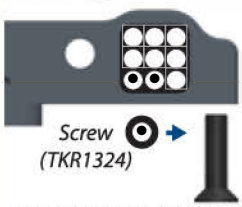

"C" Block:
TKR9163B (-1mm)
TKR9163C (-2mm)



"D" Block:
TKR9164B (-1mm)
TKR9164C (-2mm)



Wheelbase:

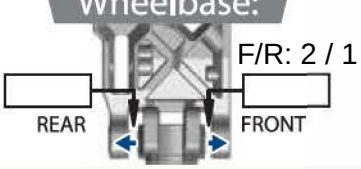

Chassis Braces:

MIDDLE: ○ REAR: ○

Tires / Wheels:

BRAND / TREAD:

COMPOUND:

INSERT:

WHEEL:

NOTES:

Body / Wing:

BODY MAKE: Kit

WING MAKE: Kit

WING MOUNT POSITION:

0mm: ○ +7mm: ○

NOTES:

Differentials:

OPTION	FRONT	CENTER	REAR
Diff Oil	10,000	7,000	5,000
(TKR5144B)	◉	◉	◉
(TKR5144)	○	○	○
(TKR5145B)	◉	◉	◉
(TKR9145)	○	○	○
Standard (TKR9114-TKR9112)	◉	◉	◉
Lightened (TKR5114XB-TKR5112x)	○	○	○
(TKR9150)	○	○	○
(TKR9150B)	○	○	○
(TKR9115C)	◉	◉	◉
(TKR9115B)	○	○	○
(TKR9149)	◉	◉	◉
(TKR9149A)	○	○	○

Bulkheads:



FRONT	REAR
TKR9416 (0mm) ◉	TKR9416 (0mm) ◉
TKR9416B (-2mm) ○	TKR9416B (-2mm) ○

Drivetrain:

PINION / SPUR: 16 / 44 (teeth)

Equipment:

ESC: MOTOR:

BATTERY: SERVO:

Notes: