FED. ROAD DIST. NO.	STATE	FED. AID PROJ. NO.	FISCAL YEAR	SHEET NO.	TOTAL SHEETS
HAWAII	HAW.	NH-019-2(076)	2026	01	106

STATE OF HAWAII

DEPARTMENT OF TRANSPORTATION

HIGHWAYS DIVISION

HONOLULU, HAWAII

PLANS FOR

HILO BAYFRONT HIGHWAY INTERSECTION IMPROVEMENTS AT WAIANUENUE AVENUE

VICINITY OF KAMEHAMEHA AVENUE

FEDERAL-AID PROJECT NO.

NH-019-2(076)

DISTRICT OF HILO

ISLAND OF HAWAII

INDEX TO DRAWINGS

SHEET NO.	DESCRIPTION
1	TITLE SHEET
2	STANDARD PLANS SUMMARY
3-7	GENERAL NOTES
8	LEGEND
9-11	WATER POLLUTION NOTES
12-13	EXISTING CONDITIONS MAP
14-15	BORING LOGS
16	OVERALL SITE PLAN
17	HORIZONTAL CONTROL
18	BASELINE CONTROL PLAN
19-24	SEQUENCING PLANS
25-26	DEMOLITION PLANS
27	EROSION AND SEDIMENT CONTROL PLAN
28	EROSION CONTROL DETAILS
29-31	TYPICAL SECTIONS
32-33	ROADWAY PLANS
34-35	STAKING PLANS
36-37	STAKING DATA SHEET
38-40	CURBLINE PROFILES
41-42	GRADING PLANS
43	WALL PROFILE
44-46	ENLARGED GRADING PLAN
47-48	UTILITY PLANS
49-50	UTILITY PROFILES
51	PAVEMENT MARKING AND SIGNAGE NOTES AND LEGEND
52-53	PAVEMENT MARKING PLAN
54-55	SIGNAGE PLAN
56	GENERAL NOTES FOR TRAFFIC CONTROL
57	WORK ZONE SIGNING PLAN AND DETAILS
58-60	TRAFFIC CONTROL PLANS
61-66	DETAILS
67-71	STRUCTURAL PLANS
72-96	ELECTRICAL & TELCOM PLANS
97-106	LANDSCAPING PLANS

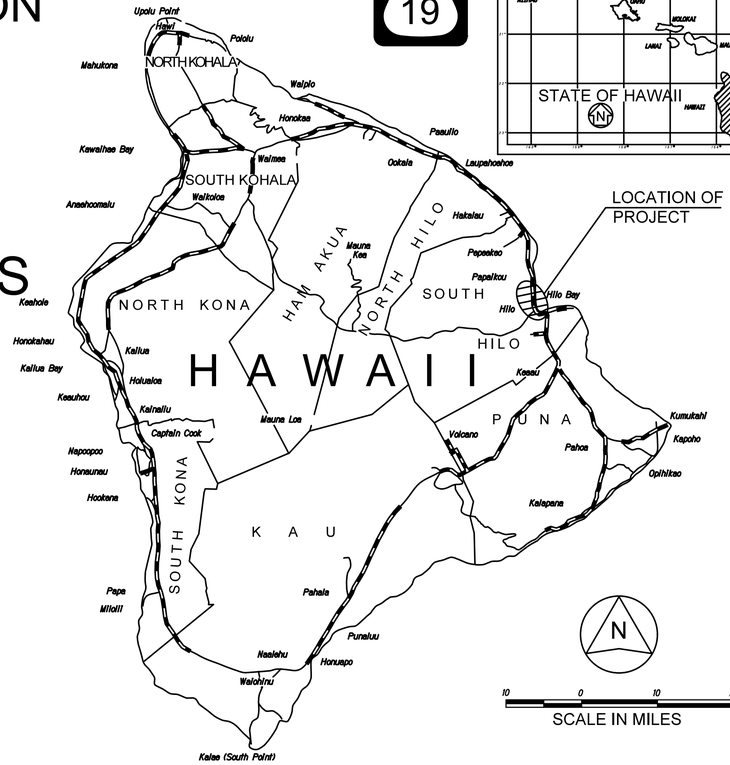

FEDERAL AID PROJECTS PREVIOUSLY CONSTRUCTED OR UNDER CONSTRUCTION

MILE POST 2.30 TO MILE POST 2.53

DESIGN DESIGNATION

	Bayfront Highway (Route 19)	Hawaii Belt Road (Route 19)
ADT (2022) . . .	12,000	18,600
ADT (2042) . . .	15,000	23,200
2042 DHV	1,280	1,970
K_{pm}	8.5%	8.5
D_{pm}	55/45	55/45
T_{pm}	4.0	4.0
T_{24}	5.0	3.7%

APPROVED:

Amy Cook 10/05/2026

FOR DIRECTOR OF PUBLIC WORKS DATE
COUNTY OF HAWAII
(FOR WORK WITHIN COUNTY R/W ONLY)

Manager, Department of Water Supply Date
County of Hawaii

DEPARTMENT OF TRANSPORTATION
STATE OF HAWAII

APPROVED:

10/02/2026

HIGHWAYS ADMINISTRATOR DATE

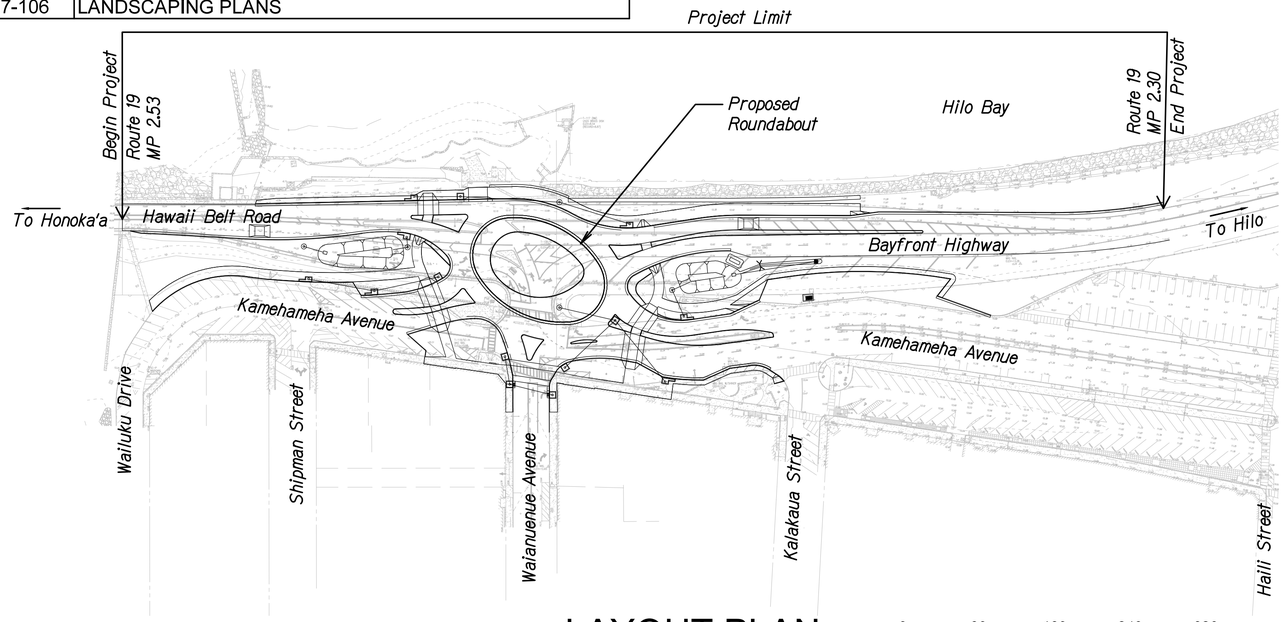

LAYOUT PLAN

LENGTH OF PROJECT . . . . 0.23 MILES

0 80 160 240 320

SCALE: 1"=80'

AUG 2026 DATE

692-7578 PHONE

HWY-DD MANAGED BY

AECOM DESIGNED BY

LAST UPDATE: August 20, 2026 @ 01:51:53 pm

PLOT DATE: September 22, 2026 @ 04:48:24 pm

STANDARD PLANS SUMMARY

FED. ROAD DIST. NO.	STATE	FED. AID PROJ. NO.	FISCAL YEAR	SHEET NO.	TOTAL SHEETS
HAWAII	HAW.	NH-019-2(076)	2026	02	106

STANDARD PLAN NO.	TITLE	DATE
B-01	NOTES & MISCELLANEOUS DETAILS	05/31/07
B-03	BACKFILL DETAILS AT EARTH RETAINING STRUCTURES	05/31/07
B-12	PRESTRESSED CONCRETE PILES & COMPRESSION	05/31/07
	SPLICE CAN DETAILS	
B-12A	PRESTRESSED CONCRETE PILES, PILE & COMPRESSION	05/31/07
	SPLICE CAN DETAILS & NOTES	
B-12B	PILE INTERACTION DIAGRAM	05/31/07
B-13	PRESTRESSED CONCRETE PILE BUILD-UP DETAILS	05/31/07

STANDARD PLAN NO.		TITLE	DATE
D-01	●	CATTLE GATE	05/31/07
D-02	●	CHAIN LINK FENCE WITH TOPRAIL	05/31/07
D-03		CHAIN LINK FENCE WITHOUT TOPRAIL	05/31/07
D-04		WIRE FENCE WITH METAL POSTS	05/31/07
D-05	●	TYPICAL DETAILS OF CURBS AND/OR GUTTERS	05/31/07
D-06	●	TYPICAL DETAIL OF REINFORCED CONCRETE DROP	05/31/07
		DRIVEWAY	
D-07		CENTERLINE AND REFERENCE SURVEY MONUMENTS	05/31/07
D-08		STREET SURVEY MONUMENT	05/31/07
D-15	●	CONCRETE SIDEWALK	05/31/07
D-16		P.C.C. BUS PAD	05/31/07
D-17		P.C.C. BUS PAD	05/31/07
D-18		P.C.C. PAVEMENT LAYOUT	05/31/07
D-19		P.C.C. PAVEMENT W/ PERMEABLE BASE JOINT DETAILS	05/31/07
D-20		P.C.C. PAVEMENT W/ PERMEABLE BASE JOINT DETAILS	05/31/07
D-21		P.C.C. LONGITUDINAL JOINT DETAILS	05/31/07
D-22		P.C.C. CONNECTION TO CURBS AND GUTTERS	05/31/07
D-23		JOINTS	05/31/07

STANDARD PLAN NO.		TITLE	DATE
L-01	●	TREE PLANTING	08/16/06
L-02	●	TREE PLANTING	08/16/06
L-03		TREE TRANSPLANTING	08/16/06
L-04	●	PALM PLANTING	08/16/06
L-05		SHRUB PLANTING	08/16/06
L-06		LANDSCAPE DETAILS	08/16/06
L-07		LANDSCAPE DETAILS	08/16/06
L-08		LANDSCAPE DETAILS	08/16/06
L-09		LANDSCAPE DETAILS	08/16/06
L-10		LANDSCAPE DETAILS	08/16/06
L-11		PLANTING NOTES	08/16/06
L-12		IRRIGATION DETAILS	08/16/06
L-13		IRRIGATION DETAILS	08/16/06
L-14		IRRIGATION DETAILS	08/16/06
L-15		IRRIGATION DETAILS	08/16/06
L-16		IRRIGATION DETAILS	08/16/06
L-17		IRRIGATION DETAILS	08/16/06
L-18		IRRIGATION DETAILS	08/16/06
L-19		IRRIGATION DETAILS	08/16/06
L-20		IRRIGATION DETAILS	08/16/06
L-21		IRRIGATION DETAILS	08/16/06
L-22		IRRIGATION DETAILS	08/16/06
L-23		IRRIGATION DETAILS	08/16/06
L-24		IRRIGATION NOTES	08/16/06

STANDARD PLAN NO.		TITLE	DATE
H-01A		TYPE A CATCH BASIN	05/31/07
H-01B	●	TYPE B CATCH BASIN	05/31/07
H-01C	●	TYPE C CATCH BASIN	05/31/07
H-01D	●	TYPE D CATCH BASIN	05/31/07
H-01E	●	CATCH BASIN SECTIONS	05/31/07
H-02A		TYPE A1 CATCH BASIN	05/31/07
H-02B		TYPE B2 CATCH BASIN	05/31/07
H-02C		TYPE C1 CATCH BASIN	05/31/07
H-02D		TYPE D1 CATCH BASIN	05/31/07
H-02E		CATCH BASIN SECTION	05/31/07
H-03	●	TYPE A, B, AND C STORM DRAIN MANHOLE	05/31/07
H-04	●	TYPE D STORM DRAIN MANHOLE	05/31/07
H-05		TYPICAL REINFORCING DETAILS FOR DRAINAGE	05/31/07
		STRUCTURES	
H-06		TYPICAL REINFORCING DETAILS FOR DRAINAGE	05/31/07
		STRUCTURES	
H-07		CATCH BASIN AND MANHOLE CASTINGS	05/31/07
H-08	●	TYPE 1A-9 AND 1A-9P GRATED DROP INLET	05/31/07
H-09		TYPE 2A-9 AND 2A-9P GRATED DROP INLET	05/31/07
H-10	●	TYPE A-9 OR A-9P STEEL FRAMES	05/31/07
H-11	●	TYPE A-9 AND A-9P STEEL GRATES	05/31/07
H-12		TYPE 61614P AND 1211214P GRATED DROP INLET	05/31/07
H-13		TYPE 61616P AND 1211216P GRATED DROP INLET	05/31/07
H-14		TYPE 61214P GRATED DROP INLET	05/31/07
H-15	●	TYPE 1211214, 1211214P, 1211216, 1211216P STEEL	05/31/07
		FRAME AND GRATES	
H-16		TYPE 61614, 61614P, 61616, 61616P STEEL FRAME	05/31/07
		AND GRATES	
H-17		TYPE 61214 STEEL FRAMES AND GRATES	05/31/07
H-18		TYPE 61214P STEEL GRATES	05/31/07
H-19		TYPE 61614B STEEL FRAME AND GRATES	05/31/07
H-20		CEMENT RUBBLE MASONRY STRUCTURES	05/31/07
H-21		CONCRETE AND CEMENT RUBBLE MASONRY STRUCTURES	05/31/07
H-22		INLET/OUTLET STRUCTURE	05/31/07
H-23		INLET/OUTLET STRUCTURE	05/31/07
H-24		FLARED END SECTION FOR CULVERTS	05/31/07
H-25		FLARED END SECTION FOR CULVERTS	05/31/07
H-26		CONCRETE SPILLWAY INLET	05/31/07
H-27		CAP COUPLING DETAILS STANDARD JOINT	05/31/07
H-28		REINFORCED CONCRETE COLLAR & JACKET	05/31/07
H-29		UNDERDRAIN CLEANOUT STEEL FRAME AND COVER	05/31/07
H-30		UNDERDRAIN CONNECTION TO DRAINAGE STRUCTURE	05/31/07

STANDARD PLAN NO.		TITLE	DATE
TE-01	●	SIGN HEIGHT AND LOCATION	07/11/08
TE-1A	●	SIGN INSTALLATION	07/11/08
TE-02A		GALVANIZED FLANGED CHANNEL SIGN POST MOUNTING	05/31/07
TE-02B		GALVANIZED FLANGED CHANNEL SIGN POST MOUNTING	05/31/07
TE-02C		GALVANIZED FLANGED CHANNEL SIGN POST MOUNTING	05/31/07
TE-03A		GALVANIZED SQUARE TUBE SIGN POST MOUNTING	05/31/07
TE-03B		GALVANIZED SQUARE TUBE SIGN POST MOUNTING	05/31/07
TE-04	●	REGULATORY SIGNS	07/11/08
TE-05	●	WARNING SIGNS	07/11/08
TE-06		MISCELLANEOUS SIGNS	07/11/08
TE-07	●	CONSTRUCTION SIGNS	07/11/08
TE-08		MISCELLANEOUS INTERSECTION SIGNS	07/11/08

STANDARD PLAN NO.		TITLE	DATE
TE-09		BIKE ROUTE SIGN & SUPPLEMENTARY PLATES	07/11/08
TE-10		INTERSTATE ROUTE MARKER	07/11/08
TE-11		STATE ROUTE MARKER AND AUXILIARY MARKERS	07/11/08
TE-12		STATE ROUTE MARKER AND BORDER DETAIL FOR	07/11/08
		GUIDE SIGNS	
TE-12A		ROUTE SIGN ASSEMBLIES	07/11/08
TE-13		STREET NAME SIGN ON MAST ARM	07/11/08
TE-14		MISCELLANEOUS REFLECTOR MARKERS	07/11/08
TE-15	●	OBJECT MARKERS	07/11/08
TE-16		MILE POSTS	07/11/08
TE-17A		CANTILEVER OVERHEAD SIGN ELEVATION & DETAILS	05/31/07
TE-17B		CANTILEVER SIGN FRAME DETAIL AND SECTION	05/31/07
TE-17C		CANTILEVER SIGN FRAME DETAIL	05/31/07
TE-17D		CANTILEVER SIGN FRAME SECTION	05/31/07
TE-17E		CANTILEVER SIGN FRAME DETAILS	05/31/07
TE-18A		TWO POST OVERHEAD SIGN FRAME ELEVATIONS	05/31/07
TE-18B		TWO POST SIGN FRAMING PLAN SECTION	05/31/07
TE-18C		TWO POST SIGN FRAMING SECTIONS AND DETAILS	05/31/07
TE-18D		TWO POST SIGN FRAME DETAILS	05/31/07
TE-18E		TWO POST SIGN FRAME DETAILS	05/31/07
TE-19A		OVERHEAD SIGN FRAMING SCHEDULE	05/31/07
TE-19B		SIGN POST DRILLED SHAFT FOUNDATION	05/31/07
TE-19C		SPREAD FOOTING	05/31/07
TE-19D		SIGN FRAME FOUNDATION SCHEDULE	05/31/07
TE-19D.1		SIGN FRAME FOUNDATION SCHEDULE	05/31/07
TE-19D.2		SIGN FRAME FOUNDATION SCHEDULE	05/31/07
TE-19D.3		SIGN FRAME FOUNDATION SCHEDULE	05/31/07
TE-19D.4		SIGN FRAME FOUNDATION SCHEDULE	05/31/07
TE-19D.5		SIGN FRAME FOUNDATION SCHEDULE	05/31/07
TE-19E		ANCHORAGE DETAILS	05/31/07
TE-19F		ANCHORAGE DETAILS	05/31/07
TE-19G		MISCELLANEOUS SIGN FRAME DETAILS	05/31/07
TE-19H		LUMINAIRE WALKWAY SUPPORT	05/31/07
TE-19J		FIXED MESSAGE LUMINAIRE SUPPORT	05/31/07
TE-19K		MISCELLANEOUS SIGN DETAILS	05/31/07
TE-19L		MISCELLANEOUS SIGN DETAILS	05/31/07
TE-19M		MISCELLANEOUS SIGN FRAME DETAILS	05/31/07
TE-20		SUPPORTS FOR GROUND MOUNTED GUIDE SIGN	05/31/07
TE-20A		SUPPORTS FOR GROUND MOUNTED GUIDE SIGN	05/31/07
TE-20B		SUPPORTS FOR GROUND MOUNTED GUIDE SIGN	05/31/07
TE-20C		SUPPORTS FOR GROUND MOUNTED GUIDE SIGN	05/31/07
TE-21A		SIGN BREAKAWAY MOUNTS	05/31/07
TE-21B		SIGN BREAKAWAY MOUNTS	05/31/07
TE-22		LAMINATED ALUMINUM SIGN PANELS (OVERHEAD)	05/31/07
TE-23		LAMINATED ALUMINUM SIGN PANELS (GROUND MOUNTED)	07/11/08
TE-24		SOLID ALUMINUM EXTRUDED SIGN PANEL AND	05/31/07
		ACCESSORY DETAILS	
TE-25		GUIDE SIGNS LUMINAIRE MOUNTINGS	05/31/07
TE-26	●	RAISED PAVEMENT MARKERS AND STRIPING	07/11/08
TE-27	●	RAISED PAVEMENT MARKERS AND STRIPING	07/11/08

STANDARD PLAN NO.	TITLE	DATE
TE-28	ENTRANCE AND EXIT PAVEMENT MARKINGS	07/11/08
TE-28A ●	MISCELLANEOUS PAVEMENT MARKINGS	07/11/08
TE-29 ●	PAVEMENT ARROWS AND SYMBOLS	07/11/08
TE-30	PAVEMENT ALPHABETS, NUMBERS & SYMBOLS	07/11/08
TE-31	PAVEMENT ALPHABETS, NUMBERS & SYMBOLS	07/11/08
TE-32	TYPE I & II TRAFFIC SIGNAL SYSTEM MISC. DETAILS	05/31/07
TE-33	TYPE II TRAFFIC SIGNAL SYSTEM	08/16/06
TE-33A.1	TYPE II TRAFFIC SIGNAL STANDARD	05/31/07
TE-33A.2	TYPE II TRAFFIC SIGNAL STANDARD	05/31/07
TE-34	LOOP DETECTOR DETAILS	07/11/08
TE-35	LOOP DETECTORS & DUCT DETAILS	07/11/08
TE-36	TRAFFIC SIGNAL DETAILS	07/11/08
TE-37	PULLBOX & COVER DETAILS	07/11/08
TE-37A	TYPE "A" TRAFFIC PULLBOX	05/31/07
TE-37B	TYPE "A" TRAFFIC PULLBOX REINFORCING	05/31/07
TE-37C	TYPE "B" TRAFFIC PULLBOX	05/31/07
TE-37D	TYPE "B" TRAFFIC PULLBOX REINFORCING	05/31/07
TE-37E	TYPE "B" TRAFFIC PULLBOX FOUNDATION	05/31/07
TE-37F	TYPE "C" TRAFFIC PULLBOX	05/31/07
TE-37G	TYPE "C" TRAFFIC PULLBOX REINFORCING	05/31/07
TE-37H	TYPE "C" TRAFFIC PULLBOX FOUNDATION	05/31/07
TE-37J	TRAFFIC PULLBOX COVER AND DETAILS	05/31/07
TE-38	TYPE III TRAFFIC SIGNAL STANDARD	05/31/07
TE-38A.1	TYPE III TRAFFIC SIGNAL STANDARD	05/31/07
TE-38A.2	TYPE III TRAFFIC SIGNAL STANDARD	05/31/07
TE-39	METAL GUARDRAIL CONNECTION TO CONCRETE BARRIER	07/11/08
TE-40	CONCRETE BARRIER TRANSITION	05/31/07
TE-40A	CONCRETE BARRIER TRANSITION SECTIONS	05/31/07
TE-41	GUARDRAIL TYPE 4 (RIGID BARRIER)	05/31/07
TE-42	PORTABLE CONCRETE BARRIER	05/31/07
TE-43	PORTABLE CONCRETE BARRIER	05/31/07
TE-44	GUARDRAIL TYPE 4 MISCELLANEOUS DETAILS	07/11/08
TE-45	BARRICADES	07/11/08
TE-46	DELINEATION & PAVEMENT MARKINGS AT NARROW	07/11/08
	BRIDGES	
TE-47	HIGHWAY LIGHT STANDARD	05/31/07

NOTE:
STANDARD PLANS APPLICABLE TO THIS PROJECT ARE INDICATED BY A "●" NEXT TO THE STANDARD PLAN NO. (For Example: D-07 ●)

JESSICA M SAMURA
LICENSED PROFESSIONAL ENGINEER
NO. 16449-C
HAWAII, U.S.A.

LICENSE EXPIRES 4/30/28

THIS WORK WAS PREPARED BY ME OR UNDER MY SUPERVISION

STATE OF HAWAII
DEPARTMENT OF TRANSPORTATION
HIGHWAYS DIVISION

STANDARD PLANS SUMMARY

HILO BAYFRONT HIGHWAY
Intersection Improvements at Waianuenue Avenue
Federal Aid Project No. NH-019-2(076)

Scale: As Noted Date: Sep, 2026

SHEET No. 1 OF 1 SHEETS

02

ORIGINAL PLAN
NOTE BOOK No.
SURVEY PLOTTED BY DATE
DRAWN BY " "
TRACED BY " "
DESIGNED BY " "
QUANTITIES BY " "
CHECKED BY " "

PLOT DATE: Sep 22, 2026 @ 0h01 pm
LAST UPDATE: Aug 10, 2026 @ 11h07 am
PATH: I:\FILENAME: C:\Users\EMCS\Desktop\ACCDocs\ACCDocs\EMCS - NAME\PROJ\107HB44-Hilo Bayfront Roundabout\Project Files\SBD CADD\SBD_SHEETS\SBD_Standard Plans Summary.dwg

FED. ROAD DIST. NO.	STATE	FED. AID PROJ. NO.	FISCAL YEAR	SHEET NO.	TOTAL SHEETS
HAWAII	HAW.	NH-019-2(076)	2026	03	106

GENERAL NOTES:

1. The Scope of Work for this project consists of converting the existing intersection into a single-lane roundabout (center island, truck apron, circular path and splitter islands); roadway stabilization; pavement reconstruction; landscaping improvements; electrical conduits and highway lighting; drainage improvements; installing ADA compliant sidewalks and roadway crossings; installing chain link fences; installing signage and pavement marking; work zone traffic control and/or detour roads; and adjusting and relocation of various utilities, as necessary.

2. A variety of vehicles movements were checked on the roundabout ranging from an SU-30 to the WB-67. To allow a WB-67 to make all turning movements, mountable curbs are used within the roundabout. The design speed limit is determined to be 35MPH with a posted speed limit of 25MPH.

3. The Contractor is reminded of the requirements of Subsection 105.16 - Subletting of Contract, which requires him to perform work amounting to not less than 30 percent of the total contract cost less deductible items. Non-compliance with this Subsection may be grounds for rejection of bid.

4. The Contractor's attention is directed to the following Sections of the Standard Specifications and Special Provisions: Subsection 104.11 - Utilities and Services; Subsection 107.06 - Contractor Duty Regarding Public Convenience; Subsection 107.11 - Safety: Accident Prevention; Subsection 107.12 - Protection of Persons and Property; and Section 645 - Work Zone Traffic Control.

5. At the end of each day's work, the Contractor shall remove all equipment and other obstructions to permit free and safe passage of public traffic.

6. The existence and location of underground utilities, manholes, monuments and structures as shown on the plans are from the latest available data but the accuracy is not guaranteed. The encountering of other obstacles during the course of work is possible. The Contractor shall be held liable for any damages incurred to the existing facilities and/or improvements as a result of his operations.

7. The existing drainage system will be functional at all times during construction. The Contractor is to furnish materials, equipment, labor, tools and incidentals necessary to maintain flow. This work shall be considered incidental to the various contract items.

8. Earth swales shall be graded to drain. This work shall be considered incidental to the various contract items.

9. All saw cutting work shall be considered incidental to the various contract items.

10. The Contractor shall provide for free and safe access to and from existing side streets. See Phasing Plans.

11. The Contractor shall provide for access to and from all existing driveways at all times. The Contractor shall coordinate with the owner if driveway closure is required.

12. Where pedestrian walkways exist, they shall be maintained in a safe and passable condition, or other facilities for pedestrians shall be provided with the same level of service as existing, if allowable. Passages between walkways at intersections shall likewise be provided at all times.

13. This Project will affect bus routes, bus stops, and/or paratransit operations; therefore, the Contractor shall notify the Mass Transit Agency at 961-8343, and Hele-On Bus at 808-961-8744 of the scope of work, location, proposed closure of any street, traffic lane, sidewalk, or bus stop and duration of the project at least two weeks prior to construction.

14. The Contractor shall follow the requirements of various permits and Best Management Practices (BMP) during the construction.

15. No work or equipment shall be located or take place within 10' of any overhead wires or any HELCo utility pole. No excavation shall take place within 5' of any HELCo utility pole.

16. The Contractor will immediately report to the Engineer and utility companies damage discovered or caused by his work to any utilities.

17. The Contractor is advised that in addition to other Contractors working in the same areas, various utility companies (or their contractors) including Hawaii Electric Light Company, Hawaiian Telcom, Spectrum, The Gas Company, and the Department of Water Supply may be performing work within the project area.

18. The Contractor shall coordinate all work with other Contractors in the areas. In case of unresolved conflict among contractors regarding access or work sites, the Engineer will make the final determination of priorities.

19. All holes, depressions and wheel ruts shall be filled and compacted with Asphalt Concrete Pavement, Mix No. V prior to resurfacing. This work shall be incidental to Asphalt Concrete Pavement.

20. Smooth riding connections shall be constructed at all limits of the project, including the beginning and end of project, connecting approaches, side streets and driveways as shown on the plans and/or as directed by the Engineer.

21. All guardrail spacer blocks shall be recycled plastic blockouts or polyethylene offset blocks approved by DOT.

22. The Contractor shall clean and remove any accumulation of aggregates along the roadside within 15 feet of the edge of pavement. This work shall be considered incidental to the various contract items.

23. All necessary permits shall be obtained by the Contractor at his own cost.

24. The Contractor shall comply with the directives of the State of Hawaii Occupational Safety and Health Law (DOSH). Any citation (fine) received by the State for noncompliance by the Contractor shall be deducted from the progress payment.

25. All lanes shall be opened to traffic during the morning peak hours from 6:30 a.m. to 8:30 a.m., during the afternoon peak hours from 3:00 p.m. to 6:00 p.m. and off work hours or as directed by the Engineer. Only one lane of highway shall be closed during work hours.

26. The Contractor shall maintain at least one paved shoulder free and clear of debris for pedestrian and bicycle traffic at the end of each work day.

27. Material from cold planing operations shall remain the property of the State and all excess shall be stock piled within 2 miles of the project limits as directed by the engineer.

28. All new and existing sign posts within the project limits shall be painted with yellow traffic paint. This work shall be considered incidental to various pavement marking items.

29. The Contractor is reminded to call the Hawaii One Call Center at (866) 423-7287 prior to starting any excavation work.

30. The Contractor shall clean existing culverts and it shall be considered incidental under Pay Item 209.0200

JESSICA M SAMORA
LICENSED PROFESSIONAL ENGINEER
NO. 16449-C
HAWAII, U.S.A.

LICENSE EXPIRES 4/30/28

THIS WORK WAS PREPARED BY ME OR UNDER MY SUPERVISION

STATE OF HAWAII
DEPARTMENT OF TRANSPORTATION
HIGHWAYS DIVISION

GENERAL NOTES

HILO BAYFRONT HIGHWAY
Intersection Improvements at Waianuenue Avenue
Federal Aid Project No. NH-019-2(076)

Scale: As Noted Date: Sep, 2026

SHEET No. 1 OF 5 SHEETS

03

ORIGINAL PLAN
NOTE BOOK
SURVEY PLOTTED BY DATE
DRAWN BY "
TRACED BY "
DESIGNED BY "
QUANTITIES BY "
CHECKED BY "

LAST UPDATE: Aug 14, 2026 @ 09:07 am PLOT DATE: Sep 22, 2026 @ 09:07 am
PATH/FILENAME: C:\Users\MaConnell\AECOM\ACCDocs\EAECOM\21-AMERIGH-607484-Hilo Bayfront Roundabout\Project Files\890 CADD\20 SHEETS\03-06_General Notes and Legend.dwg

FED. ROAD DIST. NO.	STATE	FED. AID PROJ. NO.	FISCAL YEAR	SHEET NO.	TOTAL SHEETS
HAWAII	HAW.	NH-019-2(076)	2026	04	106

NOTES FOR CONSTRUCTION WITHIN STATE RIGHT-OF-WAY

1. The Contractor shall obtain a Permit to Perform Work Upon State Highway from the Hawaii District, State Highways, at 50 Makaala Street, Hilo, prior to commencement of work within the State highway right-of-way.

2. Construction and restoration of all existing highway facilities within State right-of-way shall be done in accordance with all applicable sections of the 2005 Standard Specifications for Road and Bridge Construction, and the Specifications for Installation of Miscellaneous Improvements within State Highways, of the State Highways Division.

3. Work may be performed only between the hours of 8:30 a.m. and 3:00 p.m., Monday through Friday, except holidays, unless otherwise permitted by the Engineer.

4. The Contractor shall provide, install, and maintain all necessary signs, lights, flares, barricades, markers, cones, and other protective items, and shall take necessary precautions for the protection, convenience, and safety of public traffic. All such protective facilities and precautions to be taken shall conform with the "Administrative Rules of Hawaii Governing the Use of Traffic Control Devices at Work Sites on or Adjacent to Public Streets and Highways", adopted by the Director of Transportation, and the current U.S. Federal Highway Administration "Manual on Uniform Traffic Control Devices for Streets and Highways, Part VI - Standards and Guides for Traffic Controls for Street and Highway Construction, Maintenance, Utility and Incident Management Operations" and NCHRP 350.

5. No material and/or equipment shall be stockpiled or otherwise stored within the highway right-of-way, except at locations designated in writing and approved by the Engineer.

6. The Contractor shall be required to provide adequate, safe, non-skid bridging material over the trench, including shoring, when trenching in pavement areas to handle all types of vehicular traffic. Smooth riding tapers shall be provided for pavement transitions and advanced warning signs shall be posted. Prior to installing such bridging material, the Contractor shall submit drawings stamped by a licensed structural engineer to the Engineer for acceptance.

7. No trench shall be opened more than 200 feet in advance of the installed and tested pipe and/or ductline. No jumps or spaces will be permited unless approved in writing by the Engineer.

8. Drainage within the project limits shall be maintained at all times to allow freeflow.

9. All regulatory, guide and construction signs and barricades shall be high intensity reflective sheeting.

10. All fill slopes that do not meet the clear zone requirements set forth by the latest edition of the AASHTO Roadside Design Guide shall be shielded by MASH and HDOT approved devices.

11. The Contractor shall inform the State DOT Highway Hawaii District Permit Office at 933-8866 at least five (5) working days prior to any lane closures or changes to lane closures.

ARCHAEOLOGICAL NOTES:

1. In the event that an archaeological or historic structure within the work area is inadvertently damaged during construction, cease work in the vicinity of the site and notify the Engineer and the State Historic Preservation Division (SHPD) of the Department of Land and Natural Resources of the damage. SHPD will determine the appropriate mitigation measures.

2. In the event that a previously unknown archaeological feature is exposed by construction, cease work in the vicinity of the new feature and notify the Engineer, the SHPD, and the Hawaii County Planning Department of the new discovery.

3. In the event that previously unknown human remains are exposed by construction, cease all work in the area of the remains, and protect the area with an appropriate material. Notify HDOT and the SHPD at 692-8015.

4. If any lava tube is uncovered during earthwork operations, the Contractor shall cease all ground work in the area and immediately notify the Archaeological Monitor and the Engineer. With or without the help of the Archaeological Monitor, the Engineer will assess the situation. If the Engineer has any doubts as to the extent and/or significance of the discovery, the Engineer will contact the appropriate regulatory agency (e.g., State Historic Preservation Division).

PUBLIC HEALTH, SAFETY, AND CONVENIENCE NOTES

1. The Contractor shall observe and comply with all Federal, State, and Local laws required for the protection of public health and safety and environmental quality.

2. The Contractor, at his own expense, shall keep the project and its surrounding areas free from dust nuisance. The work shall be in conformance with the air pollution control standards and regulations of the State Department of Health. The County may require supplementary measures as necessary.

3. No Contractor shall perform any trenching operation so as to cause falling rocks, soil or debris in any form to fall, slide or flow onto adjoining properties, streets or natural water-courses. Should such violations occur, the cost incurred for any remedial action by the DOT, shall be payable by the Contractor.

4. The Contractor shall provide, install and maintain all necessary signs, lights, flares, barricades, markers, cones, and other protective facilities and shall take all necessary precautions for the protection, convenience, and safety of the public. The Contractor shall apply for a construction permit with a noise pollution control plan if work should extend beyond permitted working hours.

JESSICA M SAMORA
LICENSED PROFESSIONAL ENGINEER
NO. 16449-C
HAWAII, U.S.A.

LICENSE EXPIRES 4/30/28

THIS WORK WAS PREPARED BY ME OR UNDER MY SUPERVISION

STATE OF HAWAII
DEPARTMENT OF TRANSPORTATION
HIGHWAYS DIVISION

GENERAL NOTES

HILO BAYFRONT HIGHWAY
Intersection Improvements at Waianuenue Avenue
Federal Aid Project No. NH-019-2(076)

Scale: As Noted Date: Sep, 2026

SHEET No. 2 OF 5 SHEETS

04

ORIGINAL PLAN
NOTE BOOK
SURVEY PLOTTED BY DATE
DRAWN BY " "
TRACED BY " "
DESIGNED BY " "
QUANTITIES BY " "
CHECKED BY " "
No.

LAST UPDATE: Aug 14, 2026 @ 09:07 pm PLOT DATE: Sep 22, 2026 @ 09:07 pm
PATH: FILENAME: c:\Users\JMcCormick\AECOM\EC-AMERICAS - Documents\Projects\60748944-Hilo Bayfront Roundabout\Project Files\890 CADD\03 SHEETS\803-08_General Notes and Legend.dwg

FED. ROAD DIST. NO.	STATE	FED. AID PROJ. NO.	FISCAL YEAR	SHEET NO.	TOTAL SHEETS
HAWAII	HAW.	NH-019-2(076)	2026	05	106

BIOLOGICAL RESOURCE PROTECTION NOTES:

1. To avoid harm to Hawaiian Hoary bats, no trees or woody vegetation over 15 feet in height shall be disturbed, trimmed or removed between June 1 and September 15 (bat birthing and pup rearing season). No barbed wire for fencing shall be used.

2. Hawaiian Waterbirds: In areas where waterbirds are known to be present, reduced speed limits will be posted and enforced. In addition, project personnel and contractors will be informed about the presence of endangered species on-site. A biological monitor that is familiar with the species' biology will conduct Hawaiian waterbird nest surveys, where appropriate habitat occurs within the vicinity of the proposed project site, prior to project initiation. These surveys will be repeated within 3 days of project initiation and after any subsequent delay of work of 3 or more days (during which the birds may attempt to nest). The biologist shall also be made available to monitor during construction activities. This work shall be paid under Pay Item 671.1000. If a nest or active brood is found:

   a. The USFWS will be contacted within 48 hours for further guidance.

   b. A 100-foot buffer will be established and maintained around all active nests and/or broods until the chicks/ducklings have fledged. No potentially disruptive activities or habitat alterations will occur within the buffer.

   c. A biological monitor familiar with the species' biology will be on-site during all construction or earth moving activities to ensure Hawaiian waterbirds and nests are not adversely impacted until the chicks/ducklings fledge.

3. Listed seabirds such as the Newell's shearwater and Hawaiian petrel are known to nocturnally traverse the area to and from their mountain nesting grounds and the sea. In particular, fledging seabirds are highly attracted to bright lights, they become confused and fall to the ground. Night time work requiring the use of construction lights shall not be performed between September 15 and December 15.

4. Nene will not be approached, fed, or disturbed. If nene are observed loafing or foraging within the project area during the breeding season (September through April), a biologist familiar with nene nesting behavior will survey for nests in and around the project area prior to the resumption of work. Surveys will be repeated after any subsequent delay of work of 3 or more days (during which the birds may attempt to nest). If a nene nest is discovered within 150 feet of the work area all work will cease and the USFWS will be contacted for further guidance. If nene are observed in or near the project area the project personnel and contractor will be informed about the presence of nene at the site.

5. Hawaiian Goose: Project personnel will not approach, feed, or disturb Hawaiian geese. If Hawaiian geese are observed loafing or foraging within the project area during the breeding season (September through April), a biologist familiar with Hawaiian goose nesting behavior will survey for nests in and around the project area prior to the resumption of any work. A biologist will repeat surveys after any subsequent delay of work of 3 or more days (during which the birds may attempt to nest). If a nest is discovered within a radius of 150 ft of proposed project, or a previously undiscovered nest is found within the 150-ft radius after work begins the work will cease immediately, and project proponents will contact the Service for further guidance. In areas where Hawaiian geese are known to be present, reduced speed limits will be posted and enforced, and project personnel and contractors will be informed of the presence of federally listed species on-site.

6. Hawaiian Sea Turtles: Modification of and vehicle use on beaches or dune environments shall not occur. No removal of native dune vegetation shall occur. Applicable BMPs for work in and around the aquatic environments shall be incorporated into the project (see enclosure). The contractor (in lieu of a biologist) shall conduct a visual survey of the project site to ensure no basking sea turtles are present. If a basking sea turtles occur within the project area, all mechanical or construction activities shall cease within 100 feet of the sea turtle until it voluntarily leaves the area. All project-related debris, trash, or equipment shall be removed from the beach/dune. No project-related materials will be stockpiled in the intertidal zone, reef flats, sandy beach and adjacent vegetated areas, or stream channels.

7. All outdoor lighting, including night time work should that be permitted, shall be fully shielded and directed towards the ground so the bulb can only be seen from below. All outdoor lighting, with the exception of streetlights, will have automatic motion sensor switches and controls.

8. Powerline and other existing above ground cables will be relocated within the roadway right-of-way within five feet of the height of the existing cables.

9. If any new fencing or temporary construction fencing is required and extends above vegetation, three strands of polytape (or similar measure) will be integrated into the fence to increase visibility.

10. No work will be done in the water, and no permanent structures or temporary fill will be placed in the water, including Wailuku River and Hilo Bay

11. No construction vehicles or equipment will be operated on the beach or in dune environments.

12. Any project-related debris or trash will be removed from the beach.

13. Any construction-related debris that may pose an entanglement threat to federally listed species shall be removed from the project site if not actively being used and at the conclusion of the construction project.

14. For any delays encountered due to Biological Resource Protection, a no cost time extension will be the exclusive relief granted.

JESSICA M SAMURA
LICENSED PROFESSIONAL ENGINEER
NO. 16449-C
HAWAII, U.S.A.

LICENSE EXPIRES 4/30/28

THIS WORK WAS PREPARED BY ME OR UNDER MY SUPERVISION

STATE OF HAWAII
DEPARTMENT OF TRANSPORTATION
HIGHWAYS DIVISION

GENERAL NOTES

HILO BAYFRONT HIGHWAY
Intersection Improvements at Waianuenue Avenue
Federal Aid Project No. NH-019-2(076)

Scale: As Noted Date: Sep, 2026

SHEET No. 3 OF 5 SHEETS

05

ORIGINAL PLAN
NOTE BOOK
No.
SURVEY PLOTTED BY
DRAWN BY
TRACED BY
DESIGNED BY
QUANTITIES BY
CHECKED BY
DATE

LAST UPDATE: Aug 14, 2026 @ 09:07 pm PLOT DATE: Sep 22, 2026 @ 09:07 pm

PATH/FILENAME: C:\Users\MsCornelio\AppData\Local\Bentley\ActivityData\ACCDocs\$AECOM\21-MER\05\60194944-Hilo Bayfront Roundabout\Project Files\800 CADD\05 SHEETS\803-06_General Notes and Legend.dwg

FED. ROAD DIST. NO.	STATE	FED. AID PROJ. NO.	FISCAL YEAR	SHEET NO.	TOTAL SHEETS
HAWAII	HAW.	NH-019-2(076)	2026	06	106

NOTES FOR WORK WITHIN COUNTY RIGHT-OF-WAY

1. All work shall be done in accordance with the County of Hawaii, Department of Public Works (DPW), "Standards Specifications for Public Works Construction," dated September 1986 and "Standard Details for Public Works Construction," dated September 1984.

2. The Contractor shall verify the location of all existing utilities, whether shown on the plan or not, and shall be responsible for the repair or replacement of same in the event of damages due to his construction practices. The Contractor shall coordinate his work with the respective utility companies.

3. The Contractor shall provide and install all traffic control devices in conformance with the current edition of the "Manual on Uniform Traffic Control Devices for Streets and Highways," and as directed by the Department of Public Works.

4. The Contractor shall notify the Department of Public Works 48 hours before the commencement of any utility line work to schedule a field review and secure approval of the proposed utility line location within the County right-of-way.

5. The proposed utility line location shall be laid out in the field prior to the conducting of the field review by the Department of Public Works.

6. Field adjustments shall be made as directed by the Department of Public Works prior to the commencement of any utility line work.

7. The required permit, under Chapter 22, Article 4, Division 1 of the Hawaii County Code, shall be obtained from the Department of Public Works by the Contractor for work within the County right-of-way.

8. The Contractor shall provide at least one (1) lane for traffic movement at all times. Two (2) lanes for traffic movement shall be provided between the hours of 3:30 p.m. to 8:00 a.m.

9. The existing pavement shall be saw-cut before commencement of trenching work.

10. Any pavement outside the contract zone limits damaged as a result of construction operations shall be restored to its original condition, or better, as directed by the DPW.

11. A temporary cold mix patch shall be applied immediately upon completion of the backfilling operation and shall be maintained by the Contractor until a permanent patch is authorized by the Department of Public Works.

12. No material, except the trench excavated material, shall be stockpiled closer than six (6) feet from the existing edge of pavement.

13. No construction equipment shall be parked within the road right-of-way in such a manner that the equipment will obstruct the normal movement and sight distance of the driving motorist, except during actual working hours.

14. Except during actual working hours, all signs that do not pertain to the construction activity, such as "men working" and "flagman ahead" shall be covered or laid down. However all signs necessary for the safety of the public shall be maintained.

15. Any pavement markings, structures, and appurtenances (within or outside of the contract zone limits) damaged and/or worn away under the permit shall be repainted or reconstructed as directed by the Department of Public Works.

16. No trenching shall be left open for more than five (5) working days.

17. Should trenching occur through an existing sidewalk, or should damages occur to the sidewalk as a result of any construction work, the following procedure shall be utilized to repair the sidewalk:

    a. All Portland cement concrete to be removed shall first be cut with a concrete saw that has a diamond or carborundum abrasive wheel. Those cuts shall be made to a depth equal to at least one-fourth of the depth of the slab, or enough as is deemed necessary by the Department of Public Works, to permit breaking out the balance of the concrete without spalling off the exposed edges of the slab left in place.

    b. If any concrete block is touched, the whole block shall be removed and later replaced unless a minor variation is authorized by the DPW or its representative.

    c. Any damages to adjacent areas dues to settlement or to any other effects whatsoever caused by the construction work shall be properly repaired and corrected.

    d. All other incidental work shall be satisfactorily performed to effect the proper restoration of the sidewalk area.

    e. Should damage to a sidewalk, curb and/or gutter occur at a location where a curb ramp should exist, or to a driveway that does not meet with the requirement of the Americans with Disabilities Act (ADA), repair work shall include the construction of a curb ramp, or reconstruction to the driveway such that the repair work complies with the ADA and meets with the approval of the DPW.

18. When work interferes with a sidewalk, the applicant shall provide for the safe passage of pedestrians including the disabled around or through the work area.

19. No work within the County right-of-way shall be done on Saturdays, Sundays and holidays anytime without prior approval from the Department of Public Works. Right-of-way work on normal working days shall be limited between the hours of 7:00 a.m. to 3:30 p.m.

20. The Permittee shall maintain, to the satisfaction of the Department of Public Works, the area worked within the government right-of-way including repairs to pavement and shoulder damaged as a result of the installation work, for a period of one (1) year from the date of final inspection. The Permittee shall undertake repairs expeditiously, whenever directed by the Department of Public Works during the maintenance period.

JESSICA M SAMORA
LICENSED PROFESSIONAL ENGINEER
NO. 16449-C
HAWAII, U.S.A.

LICENSE EXPIRES 4/30/28

THIS WORK WAS PREPARED BY ME OR UNDER MY SUPERVISION

STATE OF HAWAII
DEPARTMENT OF TRANSPORTATION
HIGHWAYS DIVISION

GENERAL NOTES

HILO BAYFRONT HIGHWAY
Intersection Improvements at Waianuenue Avenue
Federal Aid Project No. NH-019-2(076)

Scale: As Noted Date: Sep, 2026

ORIGINAL PLAN
NOTE BOOK
No.
SURVEY PLOTTED BY
DRAWN BY
TRACED BY
DESIGNED BY
QUANTITIES BY
CHECKED BY
DATE
" " " "

LAST UPDATE: Aug 14, 2026 @ 09:07 pm PLOT DATE: Sep 22, 2026 @ 09:21 pm
PATH/FILENAME: C:\Users\McCormick\AECOM\ACCDocs\EAECOM\21-AMERIGH-607\Hilo Bayfront Roundabout\Project Files\B90 CAD\B20 SHEETS\B33-08_General Notes and Legend.dwg

FED. ROAD DIST. NO.	STATE	FED. AID PROJ. NO.	FISCAL YEAR	SHEET NO.	TOTAL SHEETS
HAWAII	HAW.	NH-019-2(076)	2026	07	106

WATER NOTES

1. *All work shall conform to the State of Hawaii "Water System Standards" dated 2002, as amended.*

2. *All existing waterline, waterline appurtenances and other utility locations shown on the plans are obtained from latest reliable sources. The Contractor shall be responsible to verify the exact location of all utilities in the field whether shown on the plans or not, and shall bear all costs for damages done during the contract period.*

3. *Whenever connection to existing mains are shown on the plans, the Contractor shall expose the existing main by hand excavation prior to excavating trenches for new mains.*

4. *The Contractor shall inform the Department of Water Supply (DWS) Engineer 72 hours prior to the beginning of any waterline work and one week prior to any connection, chlorination, shut-off or relocation.*

5. *All fittings (Class 250) and gate valves (Class 200) shall be ductile iron, mechanical joint, unless otherwise specified. Butterfly valves shall be Class 250 with epoxy coated interior unless otherwise specified.*

6. *All pipeline 4" and larger in diameter shall be ductile iron (Class 52) with push on joint (Class 52), and all pipelines smaller than 4" in diameter shall be soft copper, Type K, unless otherwise specified.*

7. *All work and materials furnished by DWS shall be payed for by the Contractor.*

8. *The Contractor shall be responsible for the chlorination of the water system and shall bear all cost. The persons engaged to do the chlorination work must have the appropriate license to perform the work in the State of Hawaii.*

9. *The water system shall be tested in the presence of a DWS representative. The water line shall be tested at a minimum of 225 p.s.i. or one and half times the static pressure at the low point, under DWS supervision just prior to paving the roadways.*

10. *All connection to existing mains shall be supervised by the DWS and paid for by the Contractor. The Contractor shall do all excavation, backfill, furnish all materials, construct reaction blocks and valve boxes, pavement repair, provide flagmen when necessary, and all necessary equipment to make hook-up.*

11. *The DWS will not assume ownership of nor grant any water service until the water system being connected to is dedicated to the DWS along with all necessary easements and documents.*

12. *Where water shut-off of more than 3 hours becomes necessary, the Contractor, at his own cost, shall provide a temporary bypass line, size of which shall be determined by the DWS Engineer. The DWS Engineer, also reserves the right to require bypass lines, regardless of the water shut-off period, if it is deemed necessary.*

13. *Minimum horizontal clearance between waterlines and other utilities shall be 8 feet unless otherwise specified. Minimum vertical clearance between waterline and other utilities shall be 12 inches provided concrete jackets are used and 18 inches if no concrete jackets are used. In all instances, the waterline shall be at a grade higher than other utilities unless otherwise specified.*

14. *4'x4'x4" reinforced concrete slab for fire hydrant shall be reinforced with 6x6-10/10 welded wire fabric.*

15. *Existing waterline, valves, fitting and appurtenances not designated "remove" shall be abandoned in place. All exposed valve boxes, valves, pipes and appurtenances shall be removed and disposed of properly at no cost to the DWS.*

APPROVED:

Manager, Department of Water Supply *Date*
County of Hawaii

JESSICA M SAMORA
LICENSED PROFESSIONAL ENGINEER
NO. 16449-C
HAWAII, U.S.A.

LICENSE EXPIRES 4/30/28

THIS WORK WAS PREPARED BY ME OR UNDER MY SUPERVISION

STATE OF HAWAII
DEPARTMENT OF TRANSPORTATION
HIGHWAYS DIVISION

GENERAL NOTES

HILO BAYFRONT HIGHWAY
Intersection Improvements at Waianuenue Avenue
Federal Aid Project No. NH-019-2(076)

Scale: As Noted Date: Sep, 2026

SHEET No. 5 OF 5 SHEETS

07

ORIGINAL PLAN
NOTE BOOK
No.

SURVEY PLOTTED BY
DRAWN BY
TRACED BY
DESIGNED BY
QUANTITIES BY
CHECKED BY
DATE

LAST UPDATE: Aug 14, 2026 @ 09:07 pm PLOT DATE: Sep 22, 2026 @ 09:07 pm
PATH/FILENAME: C:\Users\McConnell\AECOM\ACCDocs\EAECOM\21-AMERIGH-607484\Hilo Bayfront Roundabout\Project Files\830 CADD\20 SHEETS\833-08_General Notes and Legend.dwg

FED. ROAD DIST. NO.	STATE	FED. AID PROJ. NO.	FISCAL YEAR	SHEET NO.	TOTAL SHEETS
HAWAII	HAW.	NH-019-2(076)	2026	08	106

ABBREVIATIONS

Ah.	Ahead
ARV	Air Relief Valve
AC	Asphaltic Concrete
Bk.	Back
BL	Baseline
BB	Bottom of Bank
BC	Bottom of Curb
BFP	Back Flow Preventer
BP	Building Permit
CB	Catch Basin
CD	Conduit
CL	Centerline
CO	Clean Out
Conc	Concrete
CP	Construction Parcel
CY	Cubic Yard
DOT	Department of Transportation
Det	Detail
DI	Drain Inlet
Div	Diversion
DMH	Storm Drain Manhole
DS	Down Spout
Ea	Each
Esmt	Easement
EP	Edge of Pavement
ES	Edge of Shoulder
EL	Elevation
EMB	Embankment
EXC	Excavation
Exist	Existing
GDI	Grated Drain Inlet
Hwy	Highway
INV	Invert
Lt	Left
Lc	Length of Curve
LF	Linear Feet
LRC	Lava Rock Curb
Max	Maximum
ML	Matchline
Min	Minimum
Mauka	Mountainside
NTS	Not to Scale
No.	Number
Makai	Oceanside
O/S	Offset
Pvmt	Pavement
PB	Pull Box
PC	Point of Curvature
PI	Point of Intersection
PLFD	Permanent Local Flood Datum
PRC	Point of Reverse Curvature
PSL	Public Street Light
PT	Point of Tangency
SIC	Standard Industrial Classification
RPM	Reflective Pavement Marker
Rt	Right
ROW	Right-of-Way
SDMH	Storm Drain Manhole
SIC	Standard Industrial Classification
Sht	Sheet
SF	Square Feet
Std	Standard
Sta	Station
Struct	Structural
SE	Superelevation
TB	Top of Bank
TC	Top of Curb
TSL	Traffic Signal Light
TSLB	Traffic Signal Light Box
Typ	Typical
UP/SL	Utility Pole/Street Light
VC	Vertical Curve
WL	Waterline

LEGEND

- New Pavement/Reconstruction
- Transitional Cold Planing Areas
- Resurfacing Limits
- e — Existing Electrical Line
- E — New Electrical Line
- jp — Existing Joint Pole
- pp — Existing Power Pole
- emh — Existing Electric Manhole
- EMH — Adjusted Elec. MH Frame/Cover
- EMH — New Electric Manhole
- s — Existing Sewer Line
- t — Existing Telephone Line
- T — New Telephone Line
- tp — Existing Telephone Pole
- tmh — Existing Telephone Manhole
- TMH — Adjusted Tele. MH Frame/Cover
- TMH — New Telephone Manhole
- w — 8 — Existing Water Line
- wmh — Existing Water Manhole
- WMH — Adjusted Water MH Frame/Cover
- WMH — New Water Manhole
- wv — Existing Water Valve Box
- WV — Adjusted Water Valve Box
- WV — New Water Valve Box
- av — Existing Water Air Valve
- AV — Adjusted Water Air Valve
- AV — New Water Air Valve
- wm — Existing Water Meter
- WM — Adjusted Water Meter
- WM — New Water Meter
- fh — Existing Fire Hydrant
- UD 8 — New Underdrain
- mon. — Existing Monument
- MON. — Adjusted Monument
- MON. — New Monument
- Existing Traffic Sign
- Existing Light Pole
- 85W LED Street Light
- 100W LED Street Light

ORIGINAL PLAN
NOTE BOOK No.
SURVEY PLOTTED BY
DRAWN BY
TRACED BY
DESIGNED BY
QUANTITIES BY
CHECKED BY
DATE

LAST UPDATE: Aug 14, 2026 @ 09:07 am PLOT DATE: Sep 22, 2026 @ 09:21 am

PATH:\FILENAME: C:\Users\EMCorrea\AppData\Local\Temp\AcPublish_6076\Hilo Bayfront Roundabout\Project Files\SSD CADD\ SHEET\SSD-08_General Notes and Legend.dwg

LICENSED PROFESSIONAL ENGINEER
JESSICA M SAMURA
NO. 16449-C
HAWAII, U.S.A.

LICENSE EXPIRES 4/30/28

THIS WORK WAS PREPARED BY ME OR UNDER MY SUPERVISION

STATE OF HAWAII
DEPARTMENT OF TRANSPORTATION
HIGHWAYS DIVISION

LEGEND

HILO BAYFRONT HIGHWAY
Intersection Improvements at Waianuenue Avenue
Federal Aid Project No. NH-019-2(076)

Scale: As Noted Date: Sep, 2026

SHEET No. 1 OF 1 SHEETS

FED. ROAD DIST. NO.	STATE	FED. AID PROJ. NO.	FISCAL YEAR	SHEET NO.	TOTAL SHEETS
HAWAII	HAW.	NH-019-2(076)	2026	09	106

WATER POLLUTION AND EROSION CONTROL NOTES:

A. GENERAL:

1. See Special Provisions Section 209 - Water Pollution and Erosion Control. Section 209 describes but is not limited to: submittal requirements; scheduling of a water pollution and erosion control conference with the Engineer; construction requirements; method of measurement; and basis of payment. In addition, Appendix A lists potential pollutant sources and corresponding BMPs used to mitigate the pollutants.

2. Follow the guidelines in the current HDOT Construction Best Management Practices Field Manual in developing, installing and maintaining the Best Management Practices (BMP) for the project. For any conflicting requirements between the Manual and applicable bid documents, the applicable bid documents will govern. Should a requirement not be clearly described within the applicable bid documents, the Contractor shall notify the Engineer immediately for interpretation. For the purposes of clarification under Note A.2, "applicable bid documents" include the construction plans, standard specifications, Special Provisions, Permits, and the Storm Water Pollution Prevention Plan (SWPPP) when applicable.

3. Follow the guidelines in the Honolulu's City & County "Rules Relating to Soil Erosion Standards and Guidelines" along with applicable Soil Erosion Guidelines for projects on Maui, Molokai, Kauai, and Hawaii.

4. The Engineer may assess liquidated damages of up to $27,500 for non-compliance of each BMP requirement and each requirement stated in Section 209 and special provisions, for every day of non-compliance. There is no maximum limit on the amount assessed per day.

5. The Engineer will deduct the cost from the progress payment for all citations received by the Department for non-compliance, or the Contractor shall reimburse the State for the full amount of the outstanding cost incurred by the State.

6. If necessary, install a rain gage prior to any field work including the installation of any site-specific best management practices. The rain gage shall have a tolerance of at least 0.05 inches of rainfall. Install the rain gage on the project site in an area that will not deter rainfall from entering the gage opening. Do not install in a location where rain water may splash into rain gage. The rain gage installation shall be stable and plumbed. Do not begin field work until the rain gage is installed and site-specific best management practices are in-place.

7. Submit Site-Specific BMP Plan to the Engineer along with a completed Site-Specific BMP Review Checklist within 30 calendar days of contract execution. The Site-Specific BMP Review Checklist may be obtained from http://www.stormwaterhawaii.com.

B. WASTE DISPOSAL:

1. Waste Materials. Collect and store all waste materials in a securely lidded metal dumpster or roll off container with cover to keep rain out or loss of waste during windy conditions. The dumpster shall meet all local and State solid waste management regulations. Deposit all trash and construction debris from the site in the dumpster. Empty the dumpster weekly or when the container is two-thirds full, whichever is sooner. Do not bury construction waste materials onsite. The Contractor's supervisory personnel shall be instructed regarding the correct procedure for waste disposal. Post notices stating these practices in the office trailer, on a weatherproof bulletin board, or other accessible location acceptable to the Engineer. The Contractor shall be responsible for seeing that these procedures are followed. Submit the Solid Waste Disclosure Form for Construction Sites to the Engineer within 21 calendar days of date of award. Provide a copy of all the disposal receipts from the facility permitted by the Department of Health to receive solid waste to the Engineer monthly. This should also include documentation from any intermediary facility where solid waste is handled or processed.

2. Hazardous Waste. Dispose all hazardous waste materials in the manner specified by local or State regulations and by the manufacturer. The Contractor's site personnel shall be instructed in these practices and shall be responsible for seeing that these practices are followed.

3. Sanitary Waste. Collect all sanitary waste from the portable units a minimum of once per week, or as required. Position sanitary facilities where they are secure and will not be tipped over or knocked down.

C. EROSION AND SEDIMENT CONTROL INSPECTION AND MAINTENANCE PRACTICES:

1. For projects with an NPDES Permit for Construction Activities, inspect at the following intervals. For construction areas discharging to nutrient or sediment impaired waters, inspect all control measures at least once each week and within 24 hours of any rainfall event of 0.25 inches or greater within a 24 hour period. For construction areas discharging to waters not impaired for nutrient or sediments, inspect all control measure weekly. Inspections are only required during the project's normal working hours. The discharge point water classification may be found in the SWPPP.

2. For projects without an NPDES Permit for Construction Activities, inspect all control measures weekly.

3. Maintain all erosion and sediment control measures in good working order. If repair is necessary, initiate repair immediately and complete by the close of the next work day if the problem does not require significant repair or replacement, or if the problem can be corrected through routine maintenance. When installation of a new erosion or sediment control or a significant repair is needed, install the new or modified control or complete the repair no later than 7 calendar days from the time of discovery. "Immediately" means the Contractor shall take all reasonable measures to minimize or prevent discharge of pollutants until a permanent solution is installed and made operational. If a problem is identified at a time in the day in which it is too late to initiate repair, initiation of repair shall begin on the following work day.

4. Remove built-up sediment from silt fence when it has reached one-third the height of the fence. Remove sediment from other perimeter sediment control devices when it has reached one-half the height of the device.

5. Inspect silt screen or fence for depth of sediment, tears, to verify that the fabric is securely attached to the fence posts or concrete slab and to verify that the fence posts are firmly in the ground. Inspect and verify the bottom of the silt screen is buried a minimum of 6 inches below the existing ground.

6. Inspect temporary and permanent seeding and planting for bare spots, washouts and healthy growth.

7. Complete and submit to the engineer a maintenance inspection report within 24 hours after each inspection.

8. Provide a stabilized construction entrance at all points of exit onto paved roads to reduce vehicle tracking of sediments. Include stabilized construction entrance in the Water Pollution, Dust, and Erosion Control submittals. Minimum length should be 50 feet. Minimum width should be 30 feet. Minimum depth should be 12 inches or as recommended by the soils engineer and underlain with geo-textile fabric. If minimum dimensions cannot be met, provide other stabilization techniques that remove sediment prior to exit. Clean the paved street adjacent to the site entrance daily or as required to remove any excess mud, cold-planed materials, dirt or rock tracked from the site. Do not hose down the street without containing or vacuuming wash water. Cover dump trucks hauling material from the construction site with a tarpaulin. Remove sediment tracked onto the street, sidewalk, or other paved area by the end of the day in which the track-out occurs.

9. Include designated Concrete Washout Area(s) in the Water Pollution, Dust, and Erosion Control submittals.

10. Submit the name of a specific individual designated responsible for inspections, maintenance and repair activities and filling out the inspection and maintenance report.

11. Personnel selected for the inspection and maintenance responsibilities shall receive training from the Contractor. They shall be trained in all the inspection and maintenance practices necessary for keeping the erosion and sediment controls used onsite in good working order.

JESSICA M SAMURA
LICENSED PROFESSIONAL ENGINEER
NO. 16449-C
HAWAII, U.S.A.

LICENSE EXPIRES 4/30/28

THIS WORK WAS PREPARED BY ME OR UNDER MY SUPERVISION

STATE OF HAWAII
DEPARTMENT OF TRANSPORTATION
HIGHWAYS DIVISION

WATER POLLUTION NOTES

HILO BAYFRONT HIGHWAY
Intersection Improvements at Waianuenue Avenue
Federal Aid Project No. NH-019-2(076)

Scale: As Noted Date: Sep, 2026

SHEET No. 1 OF 3 SHEETS

09

ORIGINAL PLAN | NOTE BOOK | No.
SURVEY PLOTTED BY DATE
DRAWN BY "
TRACED BY "
DESIGNED BY "
QUANTITIES BY "
CHECKED BY "

LAST UPDATE: Aug 19, 2026 @ 09:47 am PLOT DATE: Sep 22, 2026 @ 04:22 pm
PATH+FILENAME: C:\Users\MacCormick\AECOM\ACCDocs\EAC01MER\05-HI\HHH-Hilo Bayfront Roundabout\Project Files\800 CADD\20 SHEETS\09-TI_Water Pollution Notes.dwg

FED. ROAD DIST. NO.	STATE	FED. AID PROJ. NO.	FISCAL YEAR	SHEET NO.	TOTAL SHEETS
HAWAII	HAW.	NH-019-2(076)	2026	10	106

WATER POLLUTION AND EROSION CONTROL NOTES (CONT.):

12. Contain, remove, and dispose slurry generated from saw cutting of pavement in accordance with approved BMP practices. Do not allow discharge into the drainage system or State waters.

13. For projects with an NPDES Permit for Construction Activities, immediately initiate stabilizing exposed soil areas upon completion of earth-disturbing activities for areas where earth-disturbing activities have permanently or temporarily ceased. Earth-disturbing activities have permanently ceased when clearing and excavation within any area of the construction site that will not include permanent structures has been completed. Earth-disturbing activities have temporarily ceased when clearing, grading, and excavation within any area of the site that will not include permanent structures will not resume (i.e., the land will be idle) for a period of 14 or more calendar days, but such activities will resume in the future. For construction areas discharging into waters not impaired for nutrients sediments, complete initial stabilization within 14 calendar days after the temporary or permanent cessation of earth-disturbing activities. For construction areas discharging into nutrient or sediment impaired waters, complete initial stabilization within 7 calendar days after the temporary or permanent cessation of earth-disturbing activities. Classification of water at the discharge point may be found in the SWPPP.

14. For projects without an NPDES Permit for Construction Activities, complete initial stabilization within 14 calendar days after the temporary or permanent cessation of earth-disturbing activities.

D. GOOD HOUSEKEEPING BEST MANAGEMENT PRACTICES:

1. Materials Pollution Prevention Plan

   a. Applicable materials or substances listed below are expected to be present onsite during construction. Other materials and substances not listed below shall be added to the inventory.

Concrete	Cleaning Solvents
Detergents	Wood
Paints (enamel and latex)	Masonry Block
Metal Studs	Herbicides and Pesticides
Tar	Curing Compounds
Fertilizers	Adhesives
Petroleum Based Products	

   b. Use Material Management Practices to reduce the risk of spills or other accidental exposure of materials and substances to storm water runoff. Make an effort to store only enough product as is required to do the job.

   c. Store all materials stored onsite in a neat, orderly manner in their appropriate containers and if possible under a roof or other enclosure.

   d. Keep products in their original containers with the original manufacturer's label.

   e. Do not mix substances with one another unless recommended by the manufacturer.

   f. Whenever possible, use a product up completely before disposing of the container.

   g. Follow manufacturer's recommendations for proper use and disposal.

   h. Conduct a daily inspection to ensure proper use and disposal of materials onsite.

2. Hazardous Material Pollution Prevention Plan

   a. Keep products in original containers unless they are not resealable.

   b. Retain original labels and Safety Data Sheets (SDS), formerly Material Safety Data Sheets (MSDS).

   c. Dispose of surplus products according to manufacturers' instructions and local and State regulations.

3. Onsite and Offsite Product Specific Plan
The following product specific practices shall be followed onsite:

   a. Petroleum Based Products: Monitor all onsite vehicles for leaks and perform regular preventive maintenance to reduce the chance of leakage. Store petroleum products in tightly sealed containers which are clearly labeled. Apply asphalt substances used onsite according to the manufacturer's recommendation.

   b. Fertilizers: Apply fertilizers used only in the minimum amounts recommended by the manufacturer and federal, state, and local requirements. Avoid applying just before a heavy rain event. Apply at the appropriate time of year for the location, and preferably timed to coincide as closely as possible to the period of maximum vegetation uptake and growth. Once applied, work fertilizer into the soil to limit exposure to storm water. Do not apply to storm conveyance channels with flowing water. Storage shall be in a covered shed or in an area where fertilizer will not come into contact with precipitation or stormwater. Transfer the contents of any partially used bags of fertilizer to a sealable plastic bin to avoid spills.

   c. Paints: Seal and store all containers when not required for use. Do not discharge excess paint to the drainage system, sanitary sewer system, or State waters. Dispose properly according to manufacturers' instructions and State and local regulations.

   d. Concrete Trucks: Washout or discharge concrete truck drum wash water only at a designated site as far as practicable from storm drain inlets or State waters. Do not discharge water in the drainage system or State waters. Disposal by percolation is prohibited. Clean disposal site as required or as requested by the Engineer.

4. Spill Control Plan

   a. Post a spill prevention plan to include measures to prevent and clean up each spill.

   b. The Contractor shall be the spill prevention and cleanup coordinator. Designate at least three site personnel who shall receive spill prevention and cleanup training. These individuals shall each become responsible for a particular phase of prevention and cleanup. Post the names of responsible spill personnel in the material storage area on a weatherproof bulletin board or other accessible location acceptable to the Engineer and in the office trailer onsite.

   c. Clearly post manufacturers' recommended methods for spill cleanup. Make site personnel aware of the procedures and the location of the information and cleanup supplies.

   d. Keep ample materials and equipment necessary for spill cleanup in the material storage area onsite.

   e. Clean up all spills immediately after discovery.

   f. Keep the spill area well ventilated. Personnel shall wear appropriate protective clothing to prevent injury from contact with a hazardous substance.

   g. Report spills of toxic hazardous material to the appropriate State or local government agency, regardless of the size. Where a leak, spill, or other release containing a hazardous substance or oil in an amount equal to or in excess of a reportable quantity established under either 40 CFR Part 110, 40 CFR Part 117, or 40 CFR Part 302 occurs during a 24-hour period, the Contractor shall notify the Engineer as soon as the Contractor has knowledge of the discharge. The Engineer will notify the National Response Center (NRC) at (800) 424-8802, the Clean Water Branch during regular business hours at 586-4309, and the Hawaii State Hospital Operator at 247-2191 and the Clean Water Branch (DOH-CWB) via email at cleanwaterbranch@doh.hawaii.gov during non-business hours immediately. The Contractor shall also provide to the Engineer, within 7 calendar days of knowledge of the release, a description of the release, the circumstances leading to the release, and the date of the release. The Engineer will provide this information to the DOH-CWB. The Engineer will provide information to the NRC if requested.

JESSICA M SAMURA
LICENSED PROFESSIONAL ENGINEER
NO. 16449-C
HAWAII, U.S.A.

LICENSE EXPIRES 4/30/28

THIS WORK WAS PREPARED BY ME OR UNDER MY SUPERVISION

STATE OF HAWAII
DEPARTMENT OF TRANSPORTATION
HIGHWAYS DIVISION

WATER POLLUTION NOTES

HILO BAYFRONT HIGHWAY
Intersection Improvements at Waianuenue Avenue
Federal Aid Project No. NH-019-2(076)

Scale: As Noted Date: Sep, 2026

SHEET No. 2 OF 3 SHEETS

ORIGINAL PLAN | NOTE BOOK | No.
SURVEY PLOTTED BY DATE
DRAWN BY "
TRACED BY "
DESIGNED BY "
QUANTITIES BY "
CHECKED BY "

LAST UPDATE: Aug 10, 2026 @ 09:47 am PLOT DATE: Sep 22, 2026 @ 08:22 am
PATH/FILENAME: C:\Users\JMacomber\AppData\Local\Temp\AcPublish_6076\Hilo Bayfront Roundabout\Project Files\ENV CAD\ENV SHEET FILES\H_Water Pollution Notes.dwg

FED. ROAD DIST. NO.	STATE	FED. AID PROJ. NO.	FISCAL YEAR	SHEET NO.	TOTAL SHEETS
HAWAII	HAW.	NH-019-2(076)	2026	11	106

WATER POLLUTION AND EROSION CONTROL NOTES (CONT.):

E. PERMIT REQUIREMENTS:

1. A National Pollutant Discharge Elimination System (NPDES) Permit for Construction Activities of one acre or more of disturbed area is required for this project. If the Contractor requires extra land disturbance, including staging and storage areas, that is not covered by the NPDES Permit obtained by the State, the Contractor shall be responsible for obtaining the required NPDES Construction Activities Permit to cover this additional disturbed area. See Hawaii Administrative Rules Chapter 11-55, Appendix C for definition of land disturbance. The Contractor's attention is directed to the applicable NPDES Permit documents on the bid package compact disc.

2. Comply with all applicable State and Federal Permit conditions. Permits may include but are not limited to the following:

   a. NPDES Permit for Construction Activities

F. SITE-SPECIFIC BMP REQUIREMENTS:
Each BMP below is referenced to the corresponding section of the current HDOT Construction Best Management Practices Field Manual and appropriate Supplemental Sheets. The Manual may be obtained from the HDOT Statewide Stormwater Management Program Website at http://www.stormwaterhawaii.com/designers-and-contractors/ under Construction Best Management Practices Field Manual. Supplemental BMP sheets are located at https://www.stormwaterhawaii.com/wp-content/uploads/2025/11/500-HDOT.SWPPPTemplate.20190411.doc under Concrete Curing and Irrigation Water.

The requirements for Water Pollution, Dust, and Erosion Control submittals are included in Section 209 of the Hawaii Standard Specifications for Road and Bridge Construction dated 2005 and applicable Special Provisions. A list of pollutant sources and corresponding BMP used to mitigate the pollutants are included in Section 209 of the Special Provisions under Appendix A.

Follow the requirements below:

1. Protect all Drainage Inlets receiving runoff from disturbed areas (SC-1).
2. Contain on-site runoff using Perimeter Sediment Controls
   a. SC-2 Vegetated Filter Strips and Buffers
   b. SC-6 Compost Filter Berm/Sock
   c. SC-7 Silt Fence or Filter Fabric Fence
   d. SC-8 Sandbag Barrier
   e. SC-9 Brush or Rock Filter
3. Control offsite runoff from entering construction area
   a. EC-3 Run-On Diversion
   b. EC-5 Earth Dike, Swales. and Ditches
4. Incorporate applicable Site Management BMP
   a. SM-1 Construction BMP Training
   b. SM-2 Material Delivery and Storage
   c. SM-3 Stockpile Management
   e. SM-6 Solid Waste Management
   f. SM-7 Sanitary Waste Management
   g. SM-9 Hazardous Materials and Waste Management
   h. SM-10 Spill Prevention and Control
   i. SM-11 Vehicle and Equipment Cleaning
   j. SM-12 Vehicle and Equipment Maintenance
   k. SM-13 Vehicle and Equipment Refueling
   l. SM-14 Scheduling
   m. SM-15 Location of Potential Sources of Sediment
   n. SM-16 Preservation of Existing Vegetation
   o. SM-18 Dust Control
5. Contain pollutants within the Construction Staging/Storage Area BMP with applicable Perimeter Sediment Controls and Site Management BMP. Include a Stabilized Construction Entrance/Exit (SC-11) for all areas which exit onto a paved street. Restrict vehicle access to these points.
6. Manage Concrete Waste including installing a Concrete Washout Area (SM-4) and properly disposing of Concrete Curing Water (California Stormwater BMP Handbook NS-12 Concrete Curing).
7. Remove saw cut slurry and hydrodemolition water from the site by vacuuming. Provide storm drain protection and/or perimeter sediment controls during saw cutting and hydrodemolition work.

LAST UPDATE: Aug 13, 2026 @ 09:07 am PLOT DATE: Sep 22, 2026 @ 08:22 am
PATH/FILENAME: C:\Users\jessica.samura\AppData\Local\Autodesk\AutoCAD Civil 3D 2024\enu\Support\Project Files\ENV CADD\3 SHEET SETS\H_Water Pollution Notes.dwg

ORIGINAL PLAN	SURVEY PLOTTED BY	DATE
NOTE BOOK	DRAWN BY	"
No.	TRACED BY	"
	DESIGNED BY	"
	QUANTITIES BY	"
	CHECKED BY	"

JESSICA M SAMURA
LICENSED PROFESSIONAL ENGINEER
NO. 16449-C
HAWAII, U.S.A.

LICENSE EXPIRES 4/30/28

THIS WORK WAS PREPARED BY
ME OR UNDER MY SUPERVISION

STATE OF HAWAII
DEPARTMENT OF TRANSPORTATION
HIGHWAYS DIVISION

WATER POLLUTION NOTES

HILO BAYFRONT HIGHWAY
Intersection Improvements at Waianuenue Avenue
Federal Aid Project No. NH-019-2(076)

Scale: As Noted Date: Sep, 2026

SHEET No. 3 OF 3 SHEETS

FED. ROAD DIST. NO.	STATE	FED. AID PROJ. NO.	FISCAL YEAR	SHEET NO.	TOTAL SHEETS
HAWAII	HAW.	NH-019-2(076)	2026	12	106

Hawaii Belt Road (State)

Kamehameha Avenue (County)

Wailuku Drive (County)

Shipman Street (County)

Waianuenue Avenue (County)

WAILUKU RIVER SEWAGE PUMP SITE
PARCEL 2A
TMK: 2-3-04:13

PARCEL 2

TMK: 2-3-04:07
ADDRESS: 10 KAMEHAMEHA AVENUE
OWNER: GENERAL CONTRACTOR LLC

TMK: 2-3-04:08
ADDRESS: 35 WAILUKU DRIVE
OWNER: STATE OF HAWAII
COUNTY OF HAWAII EXECUTIVE ORDER

TMK: 2-3-04:02
ADDRESS: 9 SHIPMAN STREET
OWNER: F KOEHNEN LTD,
G E K MAMONE & SONS LLC A/S ON FEE

TMK: 2-3-04:16
ADDRESS: 9 SHIPMAN STREET
OWNER: F KOEHNEN LTD,
G E K MAMONE & SONS LLC A/S ON FEE

TMK: 2-3-03:10
ADDRESS: 90 KAMEHAMEHA AVENUE
OWNER: HILO DRUG BLDG CO CORP

TMK: 2-3-03:11
ADDRESS: 100 KAMEHAMEHA AVENUE
OWNER: RED SEA ENTERPRISES LLC

B-1 B-2 B-3 B-7 B-8 B-9

TRUE NORTH
Scale: 1 in. = 20 ft.

Match Line See Sheet 13

ACCESS PERMITTED

LAST UPDATE: Aug 13, 2026 @ 08:07 pm
PLOT DATE: Sep 22, 2026 @ 04:22 pm
PATH/FILENAME: C:\Users\MacGrorio\AppData\Local\Temp\AcPublish_6452\Dwg\Sheet 01 - Existing Conditions.dwg

ORIGINAL PLAN	SURVEY PLOTTED BY:	DATE
	DRAWN BY	"
NOTE BOOK	TRACED BY	"
	DESIGNED BY	"
No.	QUANTITIES BY	"
	CHECKED BY	"

Legend

- Right-of-Way (ROW)
- Project Limits
- Guard Rail
- Chain Link Fence
- Wood Fence / Railing
- Metal Railing
- Edge of Pavement
- Rock Wall (CRM)
- Hollow Tile Wall (CMU)
- Concrete Surface or Pavement
- Building Footprint
- Street Light
- Exist Water Meter
- Exist Water Valve
- B-# Boring Test Location and Number
- Exist Tree
- Exist Sign

Existing Conditions Map
Scale: 1"=20'

0 20 40 60
Scale: 1" = 20' Feet

JESSICA M SAMURA
LICENSED PROFESSIONAL ENGINEER
NO. 16449-C
HAWAII, U.S.A.

LICENSE EXPIRES 4/30/28

THIS WORK WAS PREPARED BY ME OR UNDER MY SUPERVISION

STATE OF HAWAII
DEPARTMENT OF TRANSPORTATION
HIGHWAYS DIVISION

EXISTING CONDITIONS MAP

HILO BAYFRONT HIGHWAY
Intersection Improvements at Waianuenue Avenue
Federal Aid Project No. NH-019-2(076)

Scale: As Noted Date: Sep, 2026

SHEET No. 1 OF 2 SHEETS

FED. ROAD DIST. NO.	STATE	FED. AID PROJ. NO.	FISCAL YEAR	SHEET NO.	TOTAL SHEETS
HAWAII	HAW.	NH-019-2(076)	2026	13	106

Hilo Bay

B-4

B-5

B-6

B-10

Bayfront Highway (State)

Kamehameha Avenue (County)

Haili Street (County)

Match Line See Sheet 12

TRUE NORTH

Scale: 1 in. = 20 ft.

TMK: 2-3-03:03
OWNER: STATE OF HAWAII

TMK: 2-3-02:11
OWNER: STATE OF HAWAII

TMK: 2-3-02:22
ADDRESS: KAMEHAMEHA AVENUE
OWNER: STATE OF HAWAII

PARKING STALLS
AC PAVEMENT

JESSICA M SAMURA
LICENSED PROFESSIONAL ENGINEER
NO. 16449-C
HAWAII, U.S.A.

LICENSE EXPIRES 4/30/28

THIS WORK WAS PREPARED BY ME OR UNDER MY SUPERVISION

Legend

- Right-of-Way (ROW)
- Project Limits
- Guard Rail
- Chain Link Fence
- Wood Fence / Railing
- Metal Railing
- Edge of Pavement
- Rock Wall (CRM)
- Hollow Tile Wall (CMU)
- Concrete Surface or Pavement
- Building Footprint
- Street Light
- Exist Water Meter
- Exist Water Valve
- B-# Boring Test Location and Number
- Exist Tree
- Exist Sign

Existing Conditions Map

Scale: 1"=20'

0 20 40 60

Scale: 1" = 20' Feet

STATE OF HAWAII
DEPARTMENT OF TRANSPORTATION
HIGHWAYS DIVISION

EXISTING CONDITIONS MAP

HILO BAYFRONT HIGHWAY
Intersection Improvements at Waianuenue Avenue
Federal Aid Project No. NH-019-2(076)

Scale: As Noted Date: Sep, 2026

SHEET No. 2 OF 2 SHEETS

13

ORIGINAL PLAN
NOTE BOOK
SURVEY PLOTTED BY DATE
DRAWN BY " "
TRACED BY " "
DESIGNED BY " "
QUANTITIES BY " "
CHECKED BY " "
No.

PATH/FILENAME: C:\Users\$MCOMMON\AECOM\EC\ACCDocs\$ACCOMEC-AMER\RUS\60748\NH-Hilo Bayfront Roundabout\Project Files\ESIG\CAD\ESI SHEETS\ESI-13_Existing Conditions Mapdwg
PLOT DATE: Sep 22, 2026 @ 0h22 pm
LAST UPDATE: Aug 13, 2026 @ 03d7 pm

FED. ROAD DIST. NO.	STATE	FED. AID PROJ. NO.	FISCAL YEAR	SHEET NO.	TOTAL SHEETS
HAWAII	HAW.	NH-019-2(076)	2026	14	106

GEOLABS, INC. Geotechnical Engineering

INTERSECTION IMPROVEMENTS AT BAYFRONT HIGHWAY HILO, ISLAND OF HAWAII

Log of Boring **1**

Approximate Ground Surface Elevation (feet MSL): 15 *

Other Tests	Moisture Content (%)	Dry Density (pcf)	Core Recovery (%)	RQD (%)	Penetration Resistance (blows/foot)	Pocket Pen. (tsf)	Description
	18	81			15		Brown with gray mottling **SANDY GRAVEL**, very loose to loose, moist (fill)
Sieve - #200 = 6.4%	23				4		
	8	83			24		grades with some cobbles, medium dense
	11				50/2"		
			62	14			Brownish gray vesicular **BASALT**, closely fractured, moderately weathered, medium hard
			75	12			
			100	68			grades to slightly weathered
			35	32			
LL=198 PI=124	211				4		Brown **CLAYEY SILT**, soft to medium stiff (volcanic ash)
			47	0			
	8		55	14	14/4"		Gray vesicular **BASALT**, slightly fractured, moderately weathered, medium hard

Boring terminated at 41 feet

Date Started:	May 25, 2022	Water Level: ▽ 15.0 ft. 05/25/2022 1250 HRS	Plate
Date Completed:	May 25, 2022		
Logged By:	A. Ayorinde	Drill Rig: MOBILE B-53.1 *(Energy Transfer Ratio = 42.9%)*	A - 1.2
Total Depth:	41 feet	Drilling Method: 4" Solid-Stem Auger & HQ Coring	
Work Order:	8467-00	Driving Energy: 140 lb. wt., 30 in. drop	

GEOLABS, INC. Geotechnical Engineering

INTERSECTION IMPROVEMENTS AT BAYFRONT HIGHWAY HILO, ISLAND OF HAWAII

Log of Boring **2**

Approximate Ground Surface Elevation (feet MSL): 10 *

Other Tests	Moisture Content (%)	Dry Density (pcf)	Core Recovery (%)	RQD (%)	Penetration Resistance (blows/foot)	Pocket Pen. (tsf)	Description
	90	49			9		2-inch **ASPHALTIC CONCRETE**
LL=NP PI=NP	53				6		Brown with gray mottling **SANDY CLAY** with a little gravel, medium stiff, moist (fill)
	30	59	42	9	50/2"		Brown **SILTY SAND** with some gravel, loose, moist (fill)
			93	55			Gray vesicular **BASALT**, moderately to closely fractured, moderately weathered, medium hard (basalt formation)
UC= 5930 psi			100	82			grades to slightly weathered
			100	25			
			100	8			
			100	58			
			100	37			

Boring terminated at 40 feet

Date Started:	May 26, 2022	Water Level: ▽ 10.0 ft. 05/26/2022 1135 HRS	Plate
Date Completed:	May 26, 2022		
Logged By:	A. Ayorinde	Drill Rig: MOBILE B-53.1 *(Energy Transfer Ratio = 42.9%)*	A - 2.2
Total Depth:	40 feet	Drilling Method: 4" Solid-Stem Auger & HQ Coring	
Work Order:	8467-00	Driving Energy: 140 lb. wt., 30 in. drop	

GEOLABS, INC. Geotechnical Engineering

INTERSECTION IMPROVEMENTS AT BAYFRONT HIGHWAY HILO, ISLAND OF HAWAII

Log of Boring **3**

Approximate Ground Surface Elevation (feet MSL): 8 *

Other Tests	Moisture Content (%)	Dry Density (pcf)	Core Recovery (%)	RQD (%)	Penetration Resistance (blows/foot)	Pocket Pen. (tsf)	Description
	19	86			24		1-inch **ASPHALTIC CONCRETE**
Sieve - #200 = 8.6%	17				26		Gray with trace brown medium to coarse angular **SILTY GRAVEL (BASALTIC)** with some cobbles, dense, moist (fill)
	10		42	0	50/4"		Gray with trace brown **SANDY GRAVEL (BASALTIC)**, medium dense, moist (fill)
			43	34			Gray with some brown **GRAVELLY SAND (BASALTIC)** with a little silt and cobbles, medium dense to very dense, moist (beach deposit)
							grades more cobbly
			97	15			Gray with trace brown vesicular **BASALT**, moderately to closely fractured, unweathered to slightly weathered, hard to very hard (pahoehoe basalt)
UC= 4250 psi			100	28			grades to vugular locally
			100	28			
			100	48			
			100	50			
			100	25			

Boring terminated at 41.5 feet

Date Started:	May 31, 2022	Water Level: ▽ 5.2 ft. 05/31/2022 1120 HRS	Plate
Date Completed:	May 31, 2022	▼ 6.5 ft. 05/31/2022 1250 HRS	
Logged By:	S. Latronic	Drill Rig: MOBILE B-53.1 *(Energy Transfer Ratio = 42.9%)*	A - 3.2
Total Depth:	41.5 feet	Drilling Method: 4" Solid-Stem Auger & HQ Coring	
Work Order:	8467-00	Driving Energy: 140 lb. wt., 30 in. drop	

GEOLABS, INC. Geotechnical Engineering

INTERSECTION IMPROVEMENTS AT BAYFRONT HIGHWAY HILO, ISLAND OF HAWAII

Log of Boring **4**

Approximate Ground Surface Elevation (feet MSL): 15 *

Other Tests	Moisture Content (%)	Dry Density (pcf)	Core Recovery (%)	RQD (%)	Penetration Resistance (blows/foot)	Pocket Pen. (tsf)	Description
							3-inch **ASPHALTIC CONCRETE**
							7-inch **CONCRETE**
							VOID
			50	0			Gray **GRAVELLY COBBLES (BASALTIC)** with some sand, dense, dry to moist (fill)
	6				76		Gray subangular **COBBLY BOULDERS (BASALTIC)** with a little sandy gravel, very dense, dry to moist (fill)
			57	0			
							grades with several small voids locally
UC= 13350 psi			23	0			
							GW Gray with trace brown **SANDY GRAVEL (BASALTIC)** with traces of silt, medium dense (beach deposit)
Sieve - #200 = 1.5%	6				27		
			38	0			
			100	57			Brownish gray to gray vesicular **BASALT**, moderately to closely fractured, moderately to highly weathered, soft to medium hard (pahoehoe basalt)
							Gray vesicular **BASALT**, slightly to moderately fractured, slightly weathered, medium hard to hard (pahoehoe basalt)
UC= 1540 psi			100	68			
			100	87			
			87	72			

Reddish gray scoriaceous vesicular **BASALT**, moderately fractured, moderately to highly weathered, soft to medium hard (pahoehoe basalt)

Boring terminated at 41.5 feet

Date Started:	June 1, 2022	Water Level: ▽ 11.5 ft. 06/01/2022 1005 HRS	Plate
Date Completed:	June 1, 2022		
Logged By:	S. Latronic	Drill Rig: MOBILE B-53.1 *(Energy Transfer Ratio = 42.9%)*	A - 4.2
Total Depth:	41.5 feet	Drilling Method: 4" Solid-Stem Auger & HQ Coring	
Work Order:	8467-00	Driving Energy: 140 lb. wt., 30 in. drop	

GEOLABS, INC. Geotechnical Engineering

INTERSECTION IMPROVEMENTS AT BAYFRONT HIGHWAY HILO, ISLAND OF HAWAII

Log of Boring **5**

Approximate Ground Surface Elevation (feet MSL): 15 *

Other Tests	Moisture Content (%)	Dry Density (pcf)	Core Recovery (%)	RQD (%)	Penetration Resistance (blows/foot)	Pocket Pen. (tsf)	Description
							5-inch **CONCRETE**
			35	0			Gray with trace brown subangular **COBBLY BOULDERS (BASALTIC)** with some sandy gravel, very dense, dry to moist (fill)
							12-inch **VOID**
							12-inch **VOID**
			27	0			
							6-inch **VOID**
							6-inch **VOID**
							grades to wet
	8		44	0	50/3"		
							SP-SM Dark gray fine **GRAVELLY SAND (BASALTIC)**, medium dense (beach deposit)
Sieve - #200 = 11.0%	41				21		
			39	22			
			87	33			Brownish gray to gray vesicular **BASALT**, moderately fractured, slightly to moderately weathered, medium hard to hard (pahoehoe basalt)
UC= 2070 psi							
			100	55			
			93	40			
			50	30			

Reddish gray scoriaceous vesicular **BASALT**, closely to severely fractured, moderately to highly weathered, soft to medium hard (pahoehoe basalt)

Boring terminated at 41.5 feet

Date Started:	June 2, 2022	Water Level: ▽ 10.5 ft. 06/02/2022 1020 HRS	Plate
Date Completed:	June 2, 2022		
Logged By:	S. Latronic	Drill Rig: MOBILE B-53.1 *(Energy Transfer Ratio = 42.9%)*	A - 5.2
Total Depth:	41.5 feet	Drilling Method: 4" Solid-Stem Auger & HQ Coring	
Work Order:	8467-00	Driving Energy: 140 lb. wt., 30 in. drop	

GEOLABS, INC. Geotechnical Engineering

INTERSECTION IMPROVEMENTS AT BAYFRONT HIGHWAY HILO, ISLAND OF HAWAII

Log of Boring **6**

Approximate Ground Surface Elevation (feet MSL): 15 *

Other Tests	Moisture Content (%)	Dry Density (pcf)	Core Recovery (%)	RQD (%)	Penetration Resistance (blows/foot)	Pocket Pen. (tsf)	Description
LL=110 PI=51	104	45			48		CH Brown with gray mottling **SILTY CLAY** with some gravel, medium stiff to very stiff, moist (fill)
	107				6		grades with some gravelly sand
Direct Shear	43	87			14		
			62	17			Gray **COBBLY BOULDERS (BASALTIC)** with a little sandy gravel, very dense (fill)
			0	0			
	40		49	0	26/3"		Brownish gray vesicular **BASALT**, moderately weathered, medium hard (basalt formation)
			87	23			
			100	88			grades to slightly weathered
UC= 4020 psi			100	100			
			100	63			

grades to highly weathered

Boring terminated at 40 feet

Date Started:	May 27, 2022	Water Level: ▽ 10.0 ft. 05/27/2022 1201 HRS	Plate
Date Completed:	May 27, 2022		
Logged By:	A. Ayorinde	Drill Rig: MOBILE B-53.1 *(Energy Transfer Ratio = 42.9%)*	A - 6.2
Total Depth:	40 feet	Drilling Method: 4" Solid-Stem Auger & HQ Coring	
Work Order:	8467-00	Driving Energy: 140 lb. wt., 30 in. drop	

JESSICA M SAMURA
LICENSED PROFESSIONAL ENGINEER
NO. 16449-C
HAWAII, U.S.A.

LICENSE EXPIRES 4/30/28

THIS WORK WAS PREPARED BY ME OR UNDER MY SUPERVISION

STATE OF HAWAII
DEPARTMENT OF TRANSPORTATION
HIGHWAYS DIVISION

BORING LOGS

HILO BAYFRONT HIGHWAY
Intersection Improvements at Waianuenue Avenue
Federal Aid Project No. NH-019-2(076)

Scale: As Noted Date: Sep, 2026

SHEET No. 1 OF 2 SHEETS

ORIGINAL PLAN
SURVEY PLOTTED BY
DRAWN BY
TRACED BY
DESIGN BY
QUANTITIES BY
CHECKED BY
NOTE BOOK
No.
DATE
" "
" "
" "

PLOT DATE: Sep 22, 2026 @ 0h23 pm
LAST UPDATE: Jun 5, 2026 @ 03h35 pm
PATH: I:\LEWMG\ CxEuser:EMGCorning\AppData\Local\Temp\AcPublish_6420\Project Files\BID DATED SHEETS\H-5_Boring Logs.dwg

14

FED. ROAD DIST. NO.	STATE	FED. AID PROJ. NO.	FISCAL YEAR	SHEET NO.	TOTAL SHEETS
HAWAII	HAW.	NH-019-2(076)	2026	15	106

GEOLABS, INC.
Geotechnical Engineering

INTERSECTION IMPROVEMENTS AT BAYFRONT HIGHWAY HILO, ISLAND OF HAWAII

Log of Boring 7

Approximate Ground Surface Elevation (feet MSL): 15 *

Other Tests	Moisture Content (%)	Dry Density (pcf)	Core Recovery (%)	RQD (%)	Penetration Resistance (blows/foot)	Pocket Pen. (tsf)	Depth (feet)	Sample	Graphic	USCS	Description
											7-inch **CONCRETE**
	12	94			50/3"					SM	Gray **SILTY SAND** with some gravel, very dense, dry (fill)
					15/5"						
LL=205 PI=80 Direct Shear	121	33			17		5			MH	Brown **CLAYEY SILT** with a little gravel, stiff, moist (volcanic ash)
					50/3"		10				
	19				50/3"		15			SM	Gray **SILTY SAND** with some gravel, very dense (beach deposit)
											Boring terminated at 15.5 feet
							20				
							25				
							30				
							35				

Date Started: May 23, 2022	Water Level: ▽ 12.0 ft. 05/23/2022 1026 HRS	Plate
Date Completed: May 23, 2022		
Logged By: A. Ayorinde	Drill Rig: MOBILE B-53.1 *(Energy Transfer Ratio = 42.9%)*	A - 7
Total Depth: 15.5 feet	Drilling Method: 4" Solid-Stem Auger & HQ Coring	
Work Order: 8467-00	Driving Energy: 140 lb. wt., 30 in. drop	

GEOLABS, INC.
Geotechnical Engineering

INTERSECTION IMPROVEMENTS AT BAYFRONT HIGHWAY HILO, ISLAND OF HAWAII

Log of Boring 8

Approximate Ground Surface Elevation (feet MSL): 15 *

Other Tests	Moisture Content (%)	Dry Density (pcf)	Core Recovery (%)	RQD (%)	Penetration Resistance (blows/foot)	Pocket Pen. (tsf)	Depth (feet)	Sample	Graphic	USCS	Description
	21	85			50/4"					SM	3-inch **ASPHALTIC CONCRETE** 5-inch **CONCRETE**
LL=38 PI=13	15				8					CL	Gray **SILTY SAND** with some gravel, very dense, dry (fill)
Direct Shear	110	41			15		5			CH	Brown **SANDY CLAY** with some gravel, medium stiff to stiff, moist (fill)
LL=143 PI=67	116				3		10			MH	Brown **SILTY CLAY** with some gravel, medium stiff to stiff, moist (volcanic ash)
Direct Shear	87	59			26		15				Brown with reddish brown mottling **CLAYEY SILT**, soft (volcanic ash)
											grades to stiff
											Boring terminated at 16.5 feet
							20				
							25				
							30				
							35				

Date Started: May 23, 2022	Water Level: ▽ 11.0 ft. 05/23/2022 1240 HRS	Plate
Date Completed: May 23, 2022		
Logged By: A. Ayorinde	Drill Rig: MOBILE B-53.1 *(Energy Transfer Ratio = 42.9%)*	A - 8
Total Depth: 16.5 feet	Drilling Method: 4" Solid-Stem Auger & HQ Coring	
Work Order: 8467-00	Driving Energy: 140 lb. wt., 30 in. drop	

GEOLABS, INC.
Geotechnical Engineering

INTERSECTION IMPROVEMENTS AT BAYFRONT HIGHWAY HILO, ISLAND OF HAWAII

Log of Boring 9

Approximate Ground Surface Elevation (feet MSL): 12 *

Other Tests	Moisture Content (%)	Dry Density (pcf)	Core Recovery (%)	RQD (%)	Penetration Resistance (blows/foot)	Pocket Pen. (tsf)	Depth (feet)	Sample	Graphic	USCS	Description
	93	50			12					CH	Brown with gray mottling **SILTY CLAY** with some gravel, medium stiff, moist (volcanic ash)
	95				6						grades with a little sand
	17	99			63		5			SP	Gray with some reddish brown mottling **GRAVELLY SAND**, dense, moist (beach deposit)
Sieve - #200 = 3.6%	20				20		10			SW	Gray **GRAVELLY SAND** with traces of silt, medium dense to very dense (beach deposit)
	22	110			20/3"		15				grades with some gravel
											Boring terminated at 15.8 feet
							20				
							25				
							30				
							35				

Date Started: May 24, 2022	Water Level: ▽ 10.0 ft. 05/24/2022 1021 HRS	Plate
Date Completed: May 24, 2022		
Logged By: A. Ayorinde	Drill Rig: MOBILE B-53.1 *(Energy Transfer Ratio = 42.9%)*	A - 9
Total Depth: 15.8 feet	Drilling Method: 4" Solid-Stem Auger & HQ Coring	
Work Order: 8467-00	Driving Energy: 140 lb. wt., 30 in. drop	

GEOLABS, INC.
Geotechnical Engineering

INTERSECTION IMPROVEMENTS AT BAYFRONT HIGHWAY HILO, ISLAND OF HAWAII

Log of Boring 10

Approximate Ground Surface Elevation (feet MSL): 12 *

Other Tests	Moisture Content (%)	Dry Density (pcf)	Core Recovery (%)	RQD (%)	Penetration Resistance (blows/foot)	Pocket Pen. (tsf)	Depth (feet)	Sample	Graphic	USCS	Description
LL=NP PI=NP	51	74			19					SM	Gray with brown mottling **SILTY SAND** with a little gravel, medium dense, moist (fill)
	23				50/4"					SM	Gray **SILTY SAND** with a little gravel, medium dense to very dense, moist (beach deposit)
Direct Shear - #200 = 5.7%	10	98			89		5				
	31				16		10				
	20	88			8/6" +30/3"		15				
											Boring terminated at 16.3 feet
							20				
							25				
							30				
							35				

Date Started: May 24, 2022	Water Level: ▽ 9.0 ft. 05/24/2022 1251 HRS	Plate
Date Completed: May 24, 2022		
Logged By: A. Ayorinde	Drill Rig: MOBILE B-53.1 *(Energy Transfer Ratio = 42.9%)*	A - 10
Total Depth: 16.3 feet	Drilling Method: 4" Solid-Stem Auger & HQ Coring	
Work Order: 8467-00	Driving Energy: 140 lb. wt., 30 in. drop	

JESSICA M SAMURA
LICENSED PROFESSIONAL ENGINEER
NO. 16449-C
HAWAII, U.S.A.

LICENSE EXPIRES 4/30/28

THIS WORK WAS PREPARED BY ME OR UNDER MY SUPERVISION

STATE OF HAWAII
DEPARTMENT OF TRANSPORTATION
HIGHWAYS DIVISION

BORING LOGS

HILO BAYFRONT HIGHWAY
Intersection Improvements at Waianuenue Avenue
Federal Aid Project No. NH-019-2(076)

Scale: As Noted Date: Sep, 2026

SHEET No. 2 OF 2 SHEETS

ORIGINAL PLAN
NOTE BOOK
SURVEY PLOTTED BY
DRAWN BY
TRACED BY
DESIGNED BY
QUANTITIES BY
CHECKED BY
DATE
" "
" "
" "
" "
No.

PATH=Y:\LEVEL4\GL Civil\Jobs\8400s\8467-00 Bayfront Roundabout\Project Files\BBD CADD\ SHEETS\EM-15_Boring Logs.dwg
LAST UPDATE: Jun 15, 2026 @ 03:35 pm
PLOT DATE: Sep 22, 2026 @ 04:23 pm

FED. ROAD DIST. NO.	STATE	FED. AID PROJ. NO.	FISCAL YEAR	SHEET NO.	TOTAL SHEETS
HAWAII	HAW.	NH-019-2(076)	2026	16	106

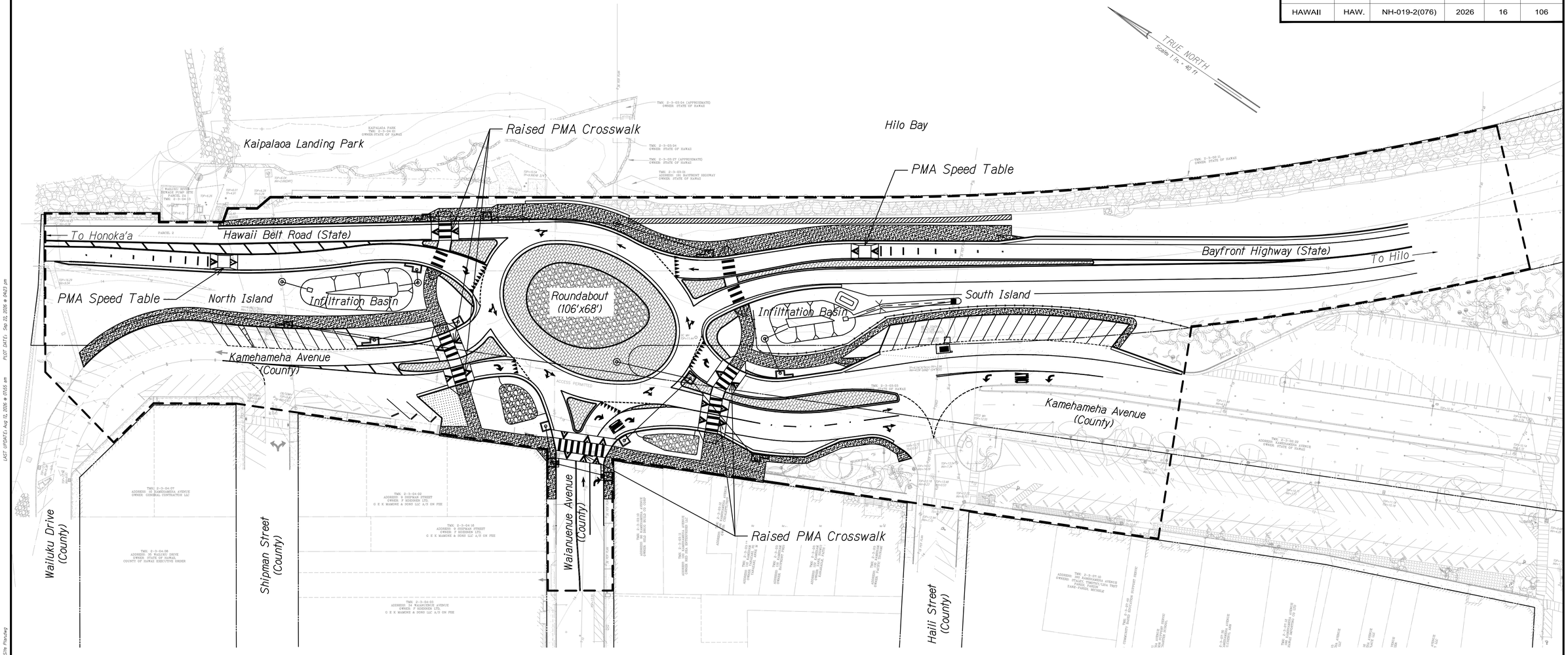

Legend

- Right-of-Way (ROW)
- Project Limits
- Existing to Remain
- New Concrete Sidewalk
- Truck Apron

Overall Site Plan

Scale: 1"=40'

0 40 80 160

Scale: 1" = 40' Feet

JESSICA M SAMURA
LICENSED PROFESSIONAL ENGINEER
NO. 16449-C
HAWAII, U.S.A.

LICENSE EXPIRES 4/30/28

THIS WORK WAS PREPARED BY ME OR UNDER MY SUPERVISION

STATE OF HAWAII
DEPARTMENT OF TRANSPORTATION
HIGHWAYS DIVISION

OVERALL SITE PLAN

HILO BAYFRONT HIGHWAY
Intersection Improvements at Waianuenue Avenue
Federal Aid Project No. NH-019-2(076)

Scale: As Noted Date: Sep, 2026

SHEET No. 1 OF 1 SHEETS

ORIGINAL PLAN
NOTE BOOK
SURVEY PLOTTED BY DATE
DRAWN BY "
TRACED BY "
DESIGNED BY "
QUANTITIES BY "
CHECKED BY "

PATH/FILENAME: C:\Users\MaConnell\AECOM\ATC\Docs\EAECOMEC1-MAERUS\60748944-Hilo Bayfront Roundabout\Project Files\890 CADD\20 SHEETS\85_Overall Site Plan.dwg
LAST UPDATE: Aug 13, 2026 @ 07:55 am
PLOT DATE: Sep 22, 2026 @ 04:23 pm

FED. ROAD DIST. NO.	STATE	FED. AID PROJ. NO.	FISCAL YEAR	SHEET NO.	TOTAL SHEETS
HAWAII	HAW.	NH-019-2(076)	2026	17	106

STA 0+00 Existing Route 19 BL

T-114 / SC-Q
Mag Nail
Elev=16.38
N:326087.4153
E:641013.6282

SC-R
Mag Nail
Elev=15.50
N:326047.0191
E:641077.2684

Kaipalaoa Landing Park

T-106 / SC-S
Mag Nail
Elev=12.35
N:325715.9585
E:641236.2820

T-117 (BM)
Usgs Brass Disk
Elev=8.54
N:325760.0894
E:641364.3534

TRUE NORTH
Scale: 1 In. = 40 Ft

EP-Sta. 25+65.82
302° 58' 53" — 1846.05'
25+66
25+00

Inset 1
Scale: 1"=40'

See Inset 1

Δ=047°30'00"
Δ / 2=23°45'00"
L=1900.00
R=2291.83
C=1846.05

302° 58' 53" — 1846.05'

SC-C
Mag Nail
Elev=12.81
N:325217.0736
E:641614.1263

PP1002 (BM)
Mag Nail
Elev=12.86
N:325527.0865
E:641351.7589

T-101 / SC-A
Mag Nail
Elev=12.81
N:325441.0343
E:641445.554

PCSta. 6+65.82

To Honoka'a

326° 43' 53" — 665.82'

322° 43' 18" — 345.51'

324° 25' 40" — 458.76'

To Hilo

Bayfront Highway
(State)

166° 11' 01" — 214.23'

305° 26' 48" — 324.49'

171° 41' 34" — 389.00'

140.44'

180.00'

92° 46' 15"

248° 43' 36"

148.45'

225° 53' 36"

303° 05' 05" — 197.94'

165° 09' 29" — 162.56'

Kamehameha Avenue
(County)

Kamehameha Avenue
(County)

T-100 / SC-D
Mag Nail
Elev=11.06
N:325067.8875
E:641712.4275

SC-B
Mag Nail
Elev=13.28
N:325283.3041
E:641503.0678

SC-E
Mag Nail
Elev=8.28
N:325039.0441
E:6416339.6525

226.97'

64° 19' 57"

SC-O
Mag Nail
Elev=10.18
N:325879.3832
E:641064.7890

T-118 / SC-N
Mag Nail
Elev=10.98
N:325722.2434
E:641106.4303

SC-L
Brass Disk
Elev=10.69
N:325634.7758
E:641132.4574

150° 49' 50" — 273.87'

352° 15' 12" — 116.59'

150° 44' 42" — 382.79'

155° 45' 14" — 136.93'

T-103
Mag Nail
Elev=10.27
N:324969.5756
E:641507.8536

SC-K
Mag Nail W/Shiner
Elev=13.34
N:325486.7073
E:641225.9328

SC-P
Mag Nail
Elev=12.41
N:325987.4360
E:640898.9402

SC-M
Mag Nail
Elev=12.65
N:325582.4381
E:641050.5115

SC-J
Mag Nail
Elev=13.18
N:325483.1034
E:641239.9131

SC-I
Mag Nail
Elev=12.83
N:325367.5772
E:641255.6286

333° 41' 12" — 474.02'

SC-H
Mag Nail
Elev=11.53
N:325149.1337
E:641426.9832

SC-G
Mag Nail
Elev=11.00
N:324942.6749
E:641465.7514

Wailuku Drive
(County)

Shipman Street
(County)

Waianuenue Avenue
(County)

Kalakaua Street
(County)

Horizontal Control

Scale: 1"=40'

0 40 80 120
Scale: 1" = 40' Feet

JESSICA M SAMURA
LICENSED PROFESSIONAL ENGINEER
NO. 16449-C
HAWAII, U.S.A.

LICENSE EXPIRES 4/30/28

THIS WORK WAS PREPARED BY ME OR UNDER MY SUPERVISION

STATE OF HAWAII
DEPARTMENT OF TRANSPORTATION
HIGHWAYS DIVISION

HORIZONTAL CONTROL

HILO BAYFRONT HIGHWAY
Intersection Improvements at Waianuenue Avenue
Federal Aid Project No. NH-019-2(076)

Scale: As Noted Date: Sep, 2026

SHEET No. 1 OF 1 SHEETS

ORIGINAL PLAN
NOTE BOOK
SURVEY PLOTTED BY DATE
DRAWN BY "
TRACED BY "
DESIGNED BY "
QUANTITIES BY "
CHECKED BY "

PLOT DATE: Sep 22, 2026 @ 0923 jm
LAST UPDATE: Aug 14, 2026 @ 0923 jm
PATH/FILENAME: C:\Users\MaConnell\AECOM\ATL-Acct\Docs\$AECOMDT-MERGE\5107\60189\44-Hilo Bayfront Roundabout\Project Files\890 CADD\20 SHEETS\17-Horizontal Control.dwg

FED. ROAD DIST. NO.	STATE	FED. AID PROJ. NO.	FISCAL YEAR	SHEET NO.	TOTAL SHEETS
HAWAII	HAW.	NH-019-2(076)	2026	18	106

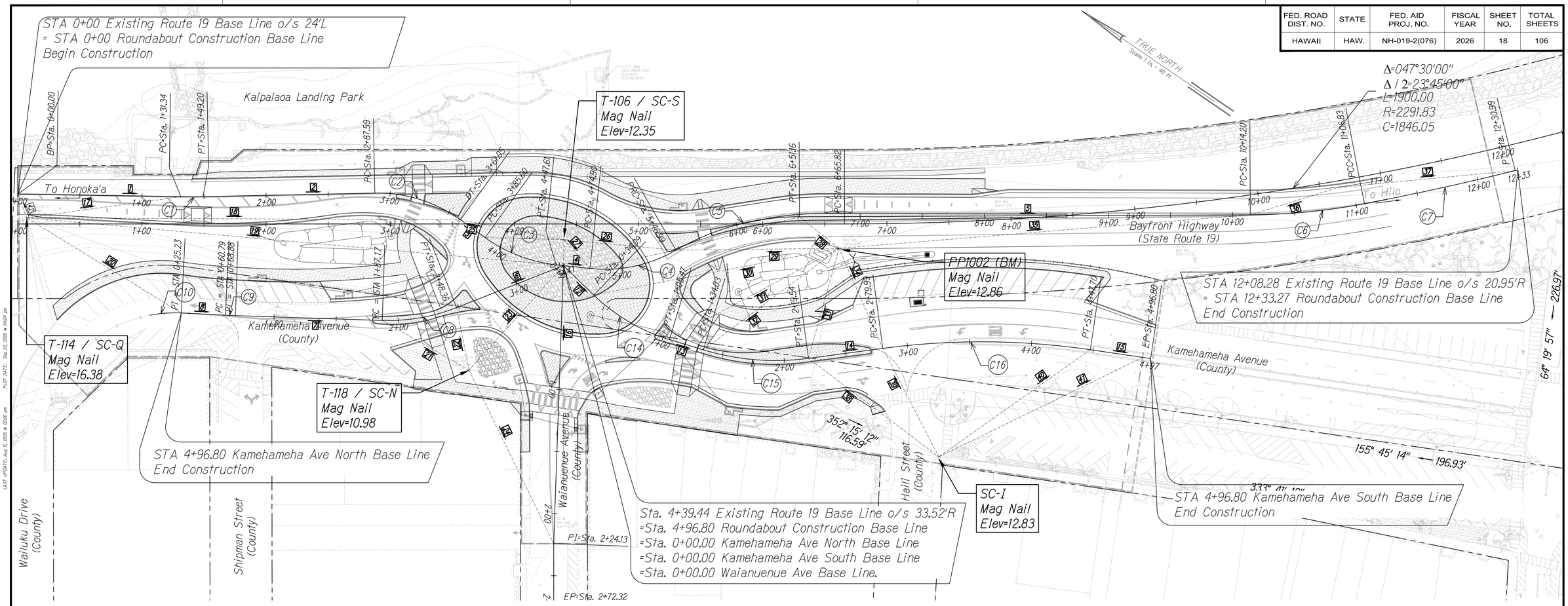

Baseline Control Plan

Scale: 1"=40'

Line Table: Alignments				
Line #	Length	Direction	Start Station	End Station
1	131.337	327° 36' 48.64"	0+00.00	1+31.34
2	138.395	325° 33' 59.90"	1+49.20	2+87.59
3	24.545	002° 29' 14.57"	3+61.05	3+85.60
4	27.295	332° 52' 46.78"	4+47.61	4+74.90
5	363.040	326° 29' 15.45"	6+51.16	10+14.20
6	92.420	305° 14' 44.86"	2+48.36	3+40.78
7	118.293	328° 37' 03.26"	0+68.88	1+87.17
8	35.561	329° 32' 39.74"	0+25.23	0+60.79
12	34.094	010° 51' 32.05"	0+00.00	0+34.09
13	28.562	343° 35' 45.24"	1+05.47	1+34.03
14	60.448	319° 05' 52.97"	2+19.54	2+79.99
15	49.105	335° 06' 46.14"	4+47.70	4+96.80
16	224.126	058° 43' 57.10"	0+00.00	2+24.13

Curve Table : Alignments						
Curve #	Radius	Length	Chord Direction	Chord Length	Delta	Half Delta
C1	500.000	17.862	326°35'24.27"	17.86	002°02'48.75"	1°01'24.37"
C2	114.000	73.460	344°01'37.23"	72.20	036°55'14.68"	18°27'37.34"
C3	120.000	62.010	347°41'00.67"	61.32	029°36'27.80"	14°48'13.90"
C4	114.000	72.090	314°45'49.26"	70.89	036°13'55.04"	18°06'57.52"
C5	200.000	104.161	311°34'03.59"	102.99	029°50'23.72"	14°55'11.86"
C6	500.000	92.637	321°10'47.75"	92.50	010°36'55.41"	5°18'27.71"
C7	2300.000	124.154	314°19'32.96"	124.14	003°05'34.15"	1°32'47.08"
C8	150.000	61.187	316°55'54.06"	60.76	023°22'18.40"	11°41'09.20"
C9	500.000	8.088	329°04'51.50"	8.09	000°55'36.48"	0°27'48.24"
C10	105.000	25.228	322°39'40.58"	25.17	013°45'58.32"	6°52'59.16"
C14	150.000	71.374	357°13'38.65"	70.70	027°15'46.81"	13°37'53.41"
C15	200.000	85.514	331°20'49.10"	84.86	024°29'52.27"	12°14'56.14"
C16	600.000	167.706	327°06'19.55"	167.16	016°00'53.17"	8°00'26.59"

Line Table : Survey Tie		
Line #	Length	Direction
17	125.274	318° 54' 44.66"
18	349.271	326° 59' 16.66"
19	433.918	331° 48' 57.19"
20	146.225	358° 21' 29.86"
21	80.572	176° 33' 43.55"
22	51.407	225° 29' 36.32"
23	113.466	278° 46' 08.39"
24	155.453	030° 43' 43.16"
25	84.978	157° 36' 45.12"
26	90.623	332° 04' 58.36"
27	31.174	014° 41' 36.28"
28	40.721	185° 25' 50.57"
29	131.191	146° 05' 07.64"
30	200.997	135° 56' 42.82"

Line Table : Survey Tie		
Line #	Length	Direction
31	155.050	118° 26' 10.50"
32	136.422	109° 53' 55.94"
33	91.963	072° 14' 53.89"
34	87.978	033° 04' 08.07"
35	332.355	322° 04' 14.83"
36	75.089	129° 31' 19.06"
37	142.217	321° 19' 27.18"
38	131.682	183° 47' 13.41"
39	98.367	209° 23' 30.08"
40	149.415	291° 27' 21.88"
41	182.514	300° 42' 01.93"
42	20.383	216° 00' 33.09"

0 40 80 120

Scale: 1" = 40' Feet

JESSICA M SAMURA
LICENSED PROFESSIONAL ENGINEER
NO. 16449-C
HAWAII, U.S.A.

LICENSE EXPIRES 4/30/28

THIS WORK WAS PREPARED BY
ME OR UNDER MY SUPERVISION

STATE OF HAWAII
DEPARTMENT OF TRANSPORTATION
HIGHWAYS DIVISION

BASELINE CONTROL PLAN

HILO BAYFRONT HIGHWAY
Intersection Improvements at Waianuenue Avenue
Federal Aid Project No. NH-019-2(076)

Scale: As Noted Date: Sep, 2026

SHEET No. 18 OF 106 SHEETS

ORIGINAL PLAN
NOTE BOOK
No.
SURVEY PLOTTED BY
DRAWN BY
TRACED BY
DESIGNED BY
QUANTITIES BY
CHECKED BY
DATE

LAST UPDATE: Aug 5, 2026 @ 02:06 pm
PLOT DATE: Sep 22, 2026 @ 04:47 pm
PATH: P:\LEANING\ C:\Users\BMCorma\AppData\Local\Temp\AcPublish_6452\Project Files\$$P\ CIVIL$$ SHEET\$$S_Baseline Control Plan.dwg

FED. ROAD DIST. NO.	STATE	FED. AID PROJ. NO.	FISCAL YEAR	SHEET NO.	TOTAL SHEETS
HAWAII	HAW.	NH-019-2(076)	2026	19	106

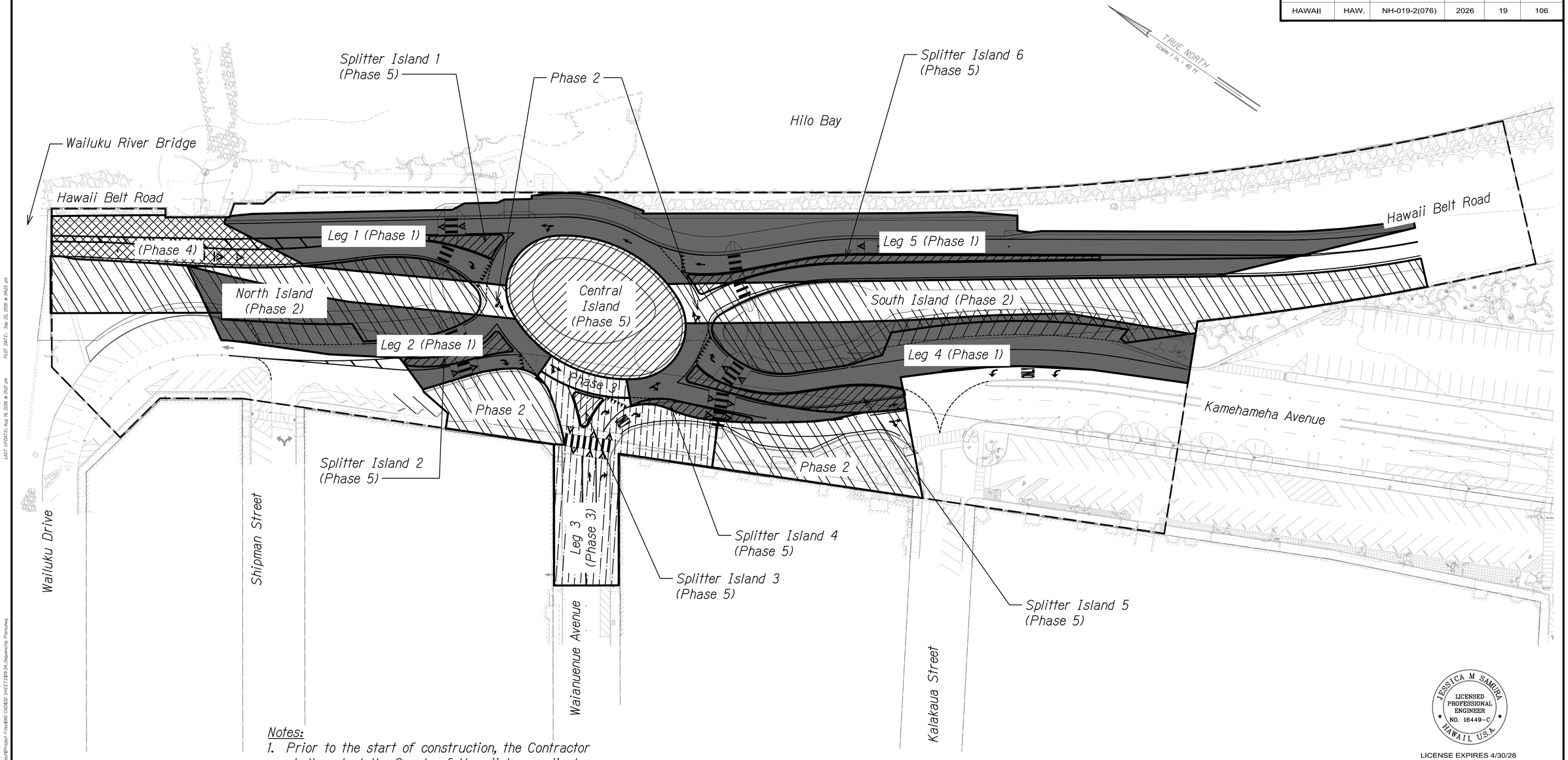

Notes:

1. Prior to the start of construction, the Contractor shall contact the County of Hawaii to coordinate locations for relocated parking.

Phase	Notes
1	-Build Leg 1/2/4/5
2	-Build North and South Islands
3	-Build Leg 3, Waianuenue Avenue is Closed.
4	-Build Leg 1 Approach, Bridge is Closed to Southbound Traffic
5	-Build Splitter Islands and Central Island

Legend

- Project Limits
- Existing to Remain
- Work Area
- Right-of-Way (ROW)

Construction Sequencing Overview

Scale: 1"=40'

0 40 80 160

Scale: 1" = 40' Feet

JESSICA M SAMURA
LICENSED PROFESSIONAL ENGINEER
NO. 16449-C
HAWAII, U.S.A.

LICENSE EXPIRES 4/30/28

THIS WORK WAS PREPARED BY ME OR UNDER MY SUPERVISION

STATE OF HAWAII
DEPARTMENT OF TRANSPORTATION
HIGHWAYS DIVISION

CONSTRUCTION SEQUENCING OVERVIEW

HILO BAYFRONT HIGHWAY
Intersection Improvements at Waianuenue Avenue
Federal Aid Project No. NH-019-2(076)

Scale: As Noted Date: Sep, 2026

SHEET No. 1 OF 6 SHEETS

ORIGINAL PLAN
NOTE BOOK
SURVEY PLOTTED BY
DRAWN BY
TRACED BY
DESIGNED BY
QUANTITIES BY
CHECKED BY
DATE
No.

PLOT DATE: Sep 22, 2026 @ 0425 pm
LAST UPDATE: Aug 14, 2026 @ 0927 pm
PATH: P:\ENGINEERING\Civil\Projects\HECDC\2026\Hilo Bayfront Roundabout\Project Files\ESD CAD\ESD SHEET\SB19-34_Sequencing Plans.dwg

FED. ROAD DIST. NO.	STATE	FED. AID PROJ. NO.	FISCAL YEAR	SHEET NO.	TOTAL SHEETS
HAWAII	HAW.	NH-019-2(076)	2026	20	106

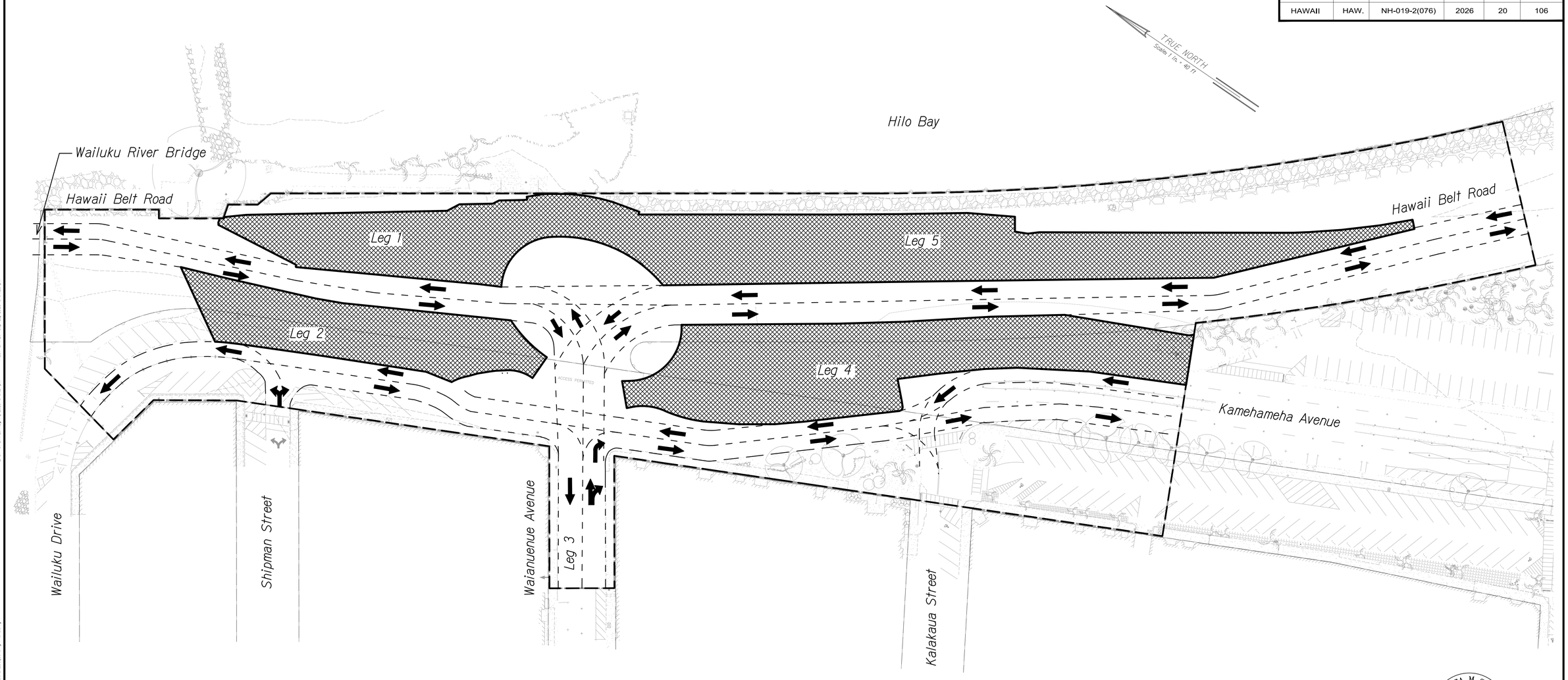

Legend

- Project Limits
- Existing to Remain
- Work Area
- Right-of-Way (ROW)

Phase 1

Construction Activity	Maintenance of Traffic
-Build Legs 1,2,4,5	-All existing traffic movements undisturbed -All approaches reduced to single lanes -Access requirement to park during construction

Construction Sequencing Plan
Phase 1 of 5

Scale: 1"=40'

0 40 80 160

Scale: 1" = 40' Feet

JESSICA M SAMURA
LICENSED PROFESSIONAL ENGINEER
NO. 16449-C
HAWAII, U.S.A.

LICENSE EXPIRES 4/30/28

THIS WORK WAS PREPARED BY ME OR UNDER MY SUPERVISION

STATE OF HAWAII
DEPARTMENT OF TRANSPORTATION
HIGHWAYS DIVISION

CONSTRUCTION SEQUENCING PLAN PHASE 1 OF 5

HILO BAYFRONT HIGHWAY
Intersection Improvements at Waianuenue Avenue
Federal Aid Project No. NH-019-2(076)

Scale: As Noted Date: Sep, 2026

SHEET No. 2 OF 6 SHEETS

ORIGINAL PLAN | SURVEY PLOTTED BY | DATE
NOTE BOOK | DRAWN BY | "
TRACED BY | "
DESIGNED BY | "
QUANTITIES BY | "
CHECKED BY | "
No.

LAST UPDATE: Aug 14, 2026 @ 0927 pm PLOT DATE: Sep 22, 2026 @ 0908 pm
PATH: P:\FILENAME: C:\Users\EMCorrea\AppData\Local\Temp\AcPublish_6076\Hilo Bayfront Roundabout\Project Files\ESD CAD\ESD SHEET\SEQ-1A_Sequencing Plans.dwg

FED. ROAD DIST. NO.	STATE	FED. AID PROJ. NO.	FISCAL YEAR	SHEET NO.	TOTAL SHEETS
HAWAII	HAW.	NH-019-2(076)	2026	21	106

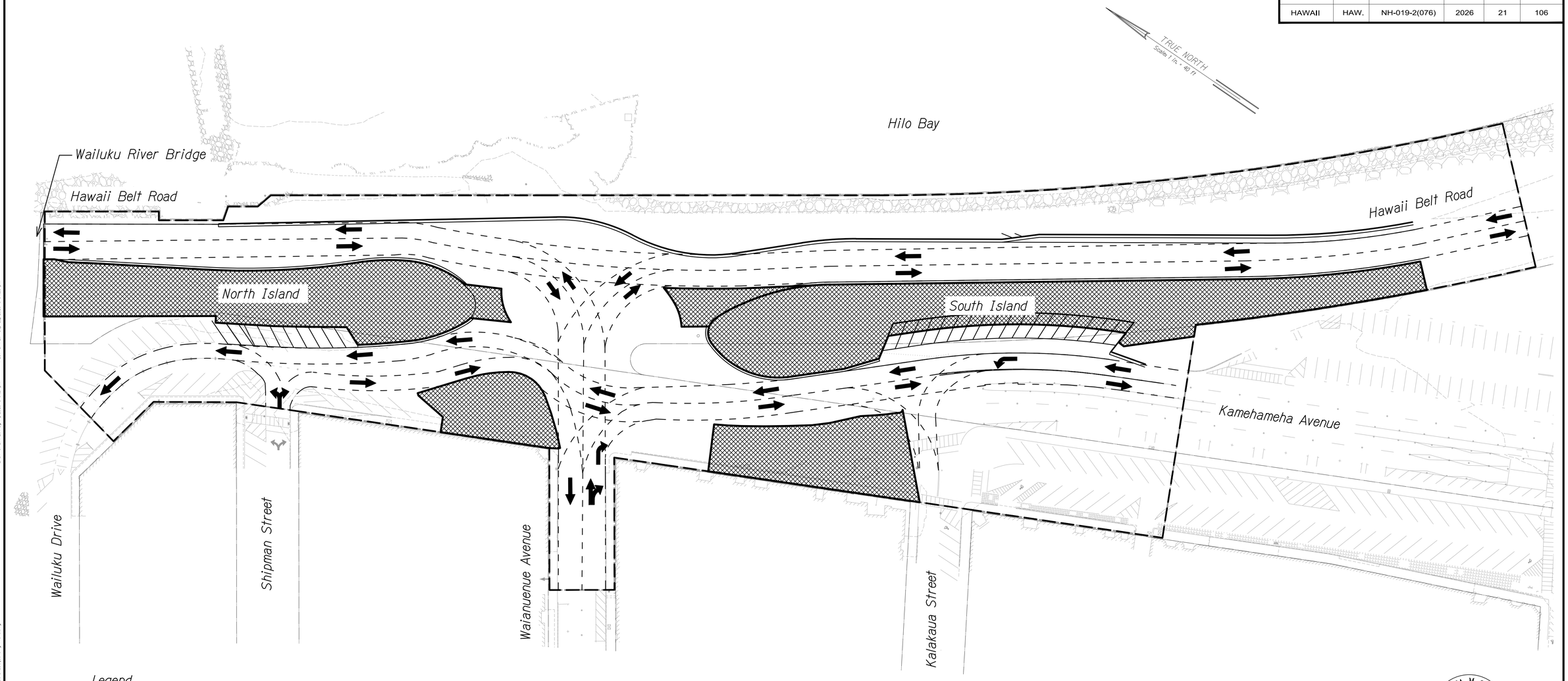

Legend

- *Project Limits*
- *Existing to Remain*
- *Work Area*
- *Right-of-Way (ROW)*

Phase 2

Construction Activity	*Maintenance of Traffic*
-Build north and south islands and mauka corners	-Divert Bayfront Highway traffic to existing mauka roadway -All existing traffic movements undisturbed

Construction Sequencing Plan Phase 2 of 5

Scale: 1"=40'

0 40 80 160

Scale: 1" = 40' Feet

JESSICA M SAMURA
LICENSED PROFESSIONAL ENGINEER
NO. 16449-C
HAWAII, U.S.A.

LICENSE EXPIRES 4/30/28

THIS WORK WAS PREPARED BY ME OR UNDER MY SUPERVISION

STATE OF HAWAII
DEPARTMENT OF TRANSPORTATION
HIGHWAYS DIVISION

CONSTRUCTION SEQUENCING PLAN PHASE 2 OF 5

HILO BAYFRONT HIGHWAY
Intersection Improvements at Waianuenue Avenue
Federal Aid Project No. NH-019-2(076)

Scale: As Noted Date: Sep, 2026

SHEET No. 3 OF 6 SHEETS

ORIGINAL PLAN
NOTE BOOK
SURVEY PLOTTED BY DATE
DRAWN BY "
TRACED BY "
DESIGNED BY "
QUANTITIES BY "
CHECKED BY "
No.

PATH=F:\FILENAME_OsBuser#$#Doc#mdk#$#ACDoc#$#ACDMC1-MEPRJ01-607#$#Hilo Bayfront Roundabout#$#Project Files#$#01 CADD\01 SHEETS#$#N_Sequencing Plan.dwg
LAST UPDATE=: Aug 14, 2026 @ 0927 pm
PLOT DATE=: Sep 22, 2026 @ 0908 pm

FED. ROAD DIST. NO.	STATE	FED. AID PROJ. NO.	FISCAL YEAR	SHEET NO.	TOTAL SHEETS
HAWAII	HAW.	NH-019-2(076)	2026	22	106

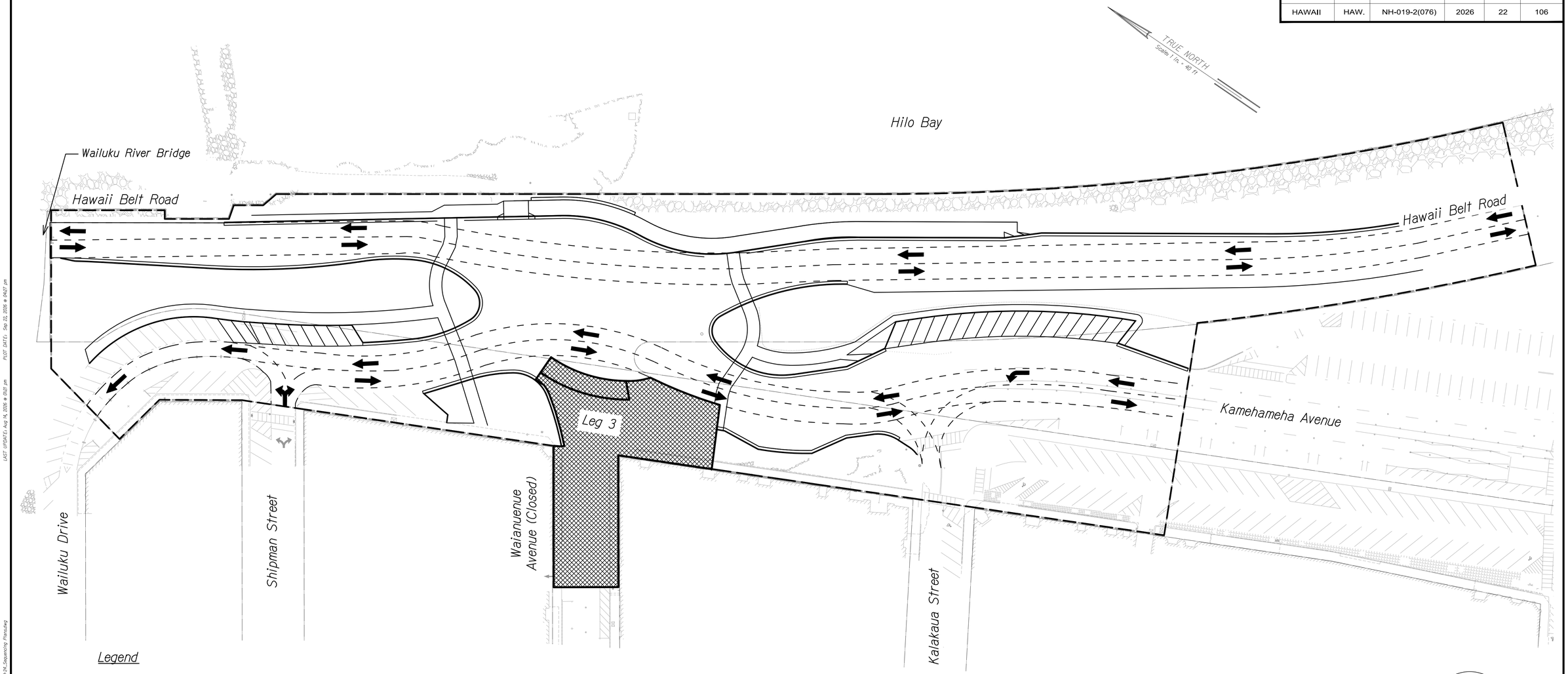

Legend

- Project Limits
- Existing to Remain
- Work Area
- Right-of-Way (ROW)

Phase 3

Construction Activity	Maintenance of Traffic
-Build Leg 3 and sidewalk	-Waianuenue Avenue is closed for an estimated two months -Mauka-bound traffic detour to Wailuku Drive Makai-bound traffic detour to Shipman Street -All other existing traffic movements undisturbed

Construction Sequencing Plan
Phase 3 of 5

Scale: 1"=40'

JESSICA M SAMURA
LICENSED PROFESSIONAL ENGINEER
NO. 16449-C
HAWAII, U.S.A.

LICENSE EXPIRES 4/30/28

THIS WORK WAS PREPARED BY
ME OR UNDER MY SUPERVISION

0 40 80 160
Scale: 1" = 40' Feet

STATE OF HAWAII
DEPARTMENT OF TRANSPORTATION
HIGHWAYS DIVISION

CONSTRUCTION SEQUENCING PLAN PHASE 3 OF 5

HILO BAYFRONT HIGHWAY
Intersection Improvements at Waianuenue Avenue
Federal Aid Project No. NH-019-2(076)

Scale: As Noted Date: Sep, 2026

SHEET No. 4 OF 6 SHEETS

22

ORIGINAL PLAN
NOTE BOOK
SURVEY PLOTTED BY DATE
DRAWN BY "
TRACED BY "
DESIGNED BY "
QUANTITIES BY "
CHECKED BY "

PATH/FILENAME: C:\Users\MaDonnie\AppData\Local\Temp\AcPublish_8420\HE21-NHER(5)-0076H-Hilo Bayfront Roundabout\Project Files\BSP, CAD\E2D_SHEETS\E2D-24_Sequencing Plans.dwg
LAST UPDATED: Aug 14, 2026 @ 0927 pm
PLOT DATE: Sep 22, 2026 @ 0927 pm

FED. ROAD DIST. NO.	STATE	FED. AID PROJ. NO.	FISCAL YEAR	SHEET NO.	TOTAL SHEETS
HAWAII	HAW.	NH-019-2(076)	2026	23	106

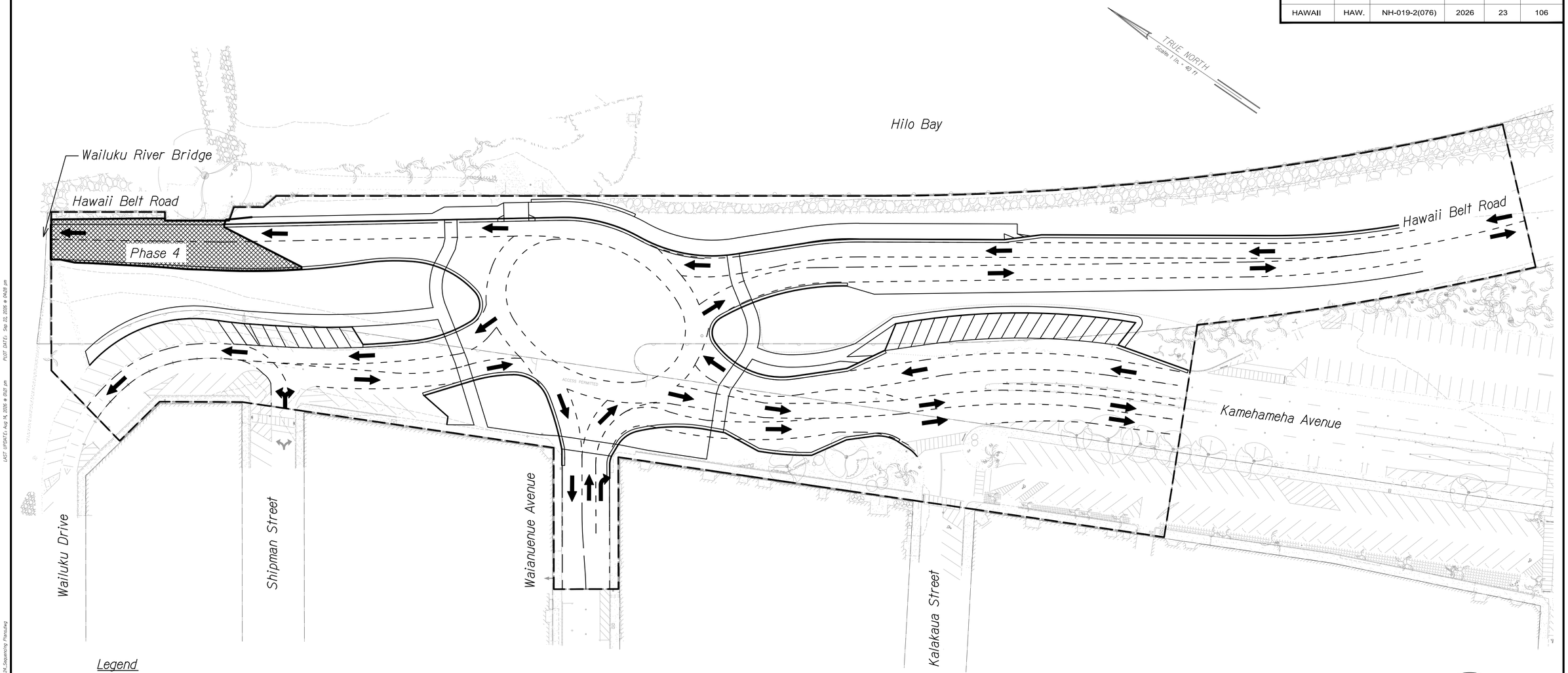

Legend

- *Project Limits*
- *Existing to Remain*
- *Work Area*
- *Right-of-Way (ROW)*

Phase 4

Construction Activity	*Maintenance of Traffic*
-Build Leg 1 approach (Bayfront Highway Northern Tie-in)	-Bridge is closed to southbound traffic -Detour Bayfront southbound traffic to Wainaku Street/Waianuenue Avenue Route -Open roundabout Legs 2, 3, 4, 5

Construction Sequencing Plan Phase 4 of 5

Scale: 1"=40'

0 40 80 160

Scale: 1" = 40' Feet

JESSICA M SAMURA
LICENSED PROFESSIONAL ENGINEER
NO. 16449-C
HAWAII, U.S.A.

LICENSE EXPIRES 4/30/28

THIS WORK WAS PREPARED BY ME OR UNDER MY SUPERVISION

STATE OF HAWAII
DEPARTMENT OF TRANSPORTATION
HIGHWAYS DIVISION

CONSTRUCTION SEQUENCING PLAN PHASE 4 OF 5

HILO BAYFRONT HIGHWAY
Intersection Improvements at Waianuenue Avenue
Federal Aid Project No. NH-019-2(076)

Scale: As Noted Date: Sep, 2026

SHEET No. 5 OF 6 SHEETS

ORIGINAL PLAN
NOTE BOOK
No.
SURVEY PLOTTED BY DATE
DRAWN BY "
TRACED BY "
DESIGNED BY "
QUANTITIES BY "
CHECKED BY "

LAST UPDATE: Aug 14, 2026 @ 0627 pm PLOT DATE: Sep 22, 2026 @ 0408 pm
PATH/FILENAME: C:\Users\jMacomber\AppData\Local\Temp\AcPublish_6076\Hilo Bayfront Roundabout\Project Files\ESRI CAD\E2S SHEET-E1&P-24_Sequencing Plans.dwg

FED. ROAD DIST. NO.	STATE	FED. AID PROJ. NO.	FISCAL YEAR	SHEET NO.	TOTAL SHEETS
HAWAII	HAW.	NH-019-2(076)	2026	24	106

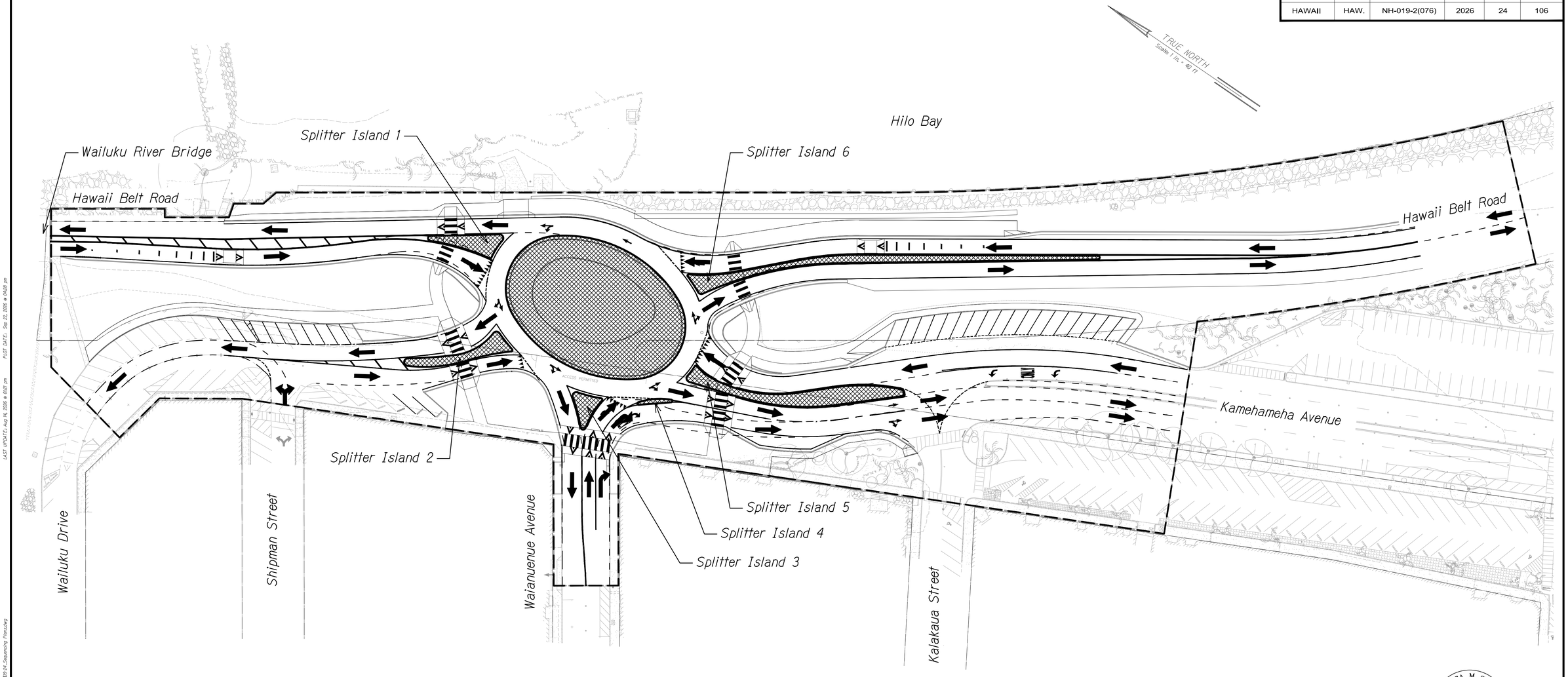

Legend

- Project Limits
- Existing to Remain
- Work Area
- Right-of-Way (ROW)

Phase 5

Construction Activity	*Maintenance of Traffic*
-Build splitter islands and central island	-All roundabout legs are open -No closures

Construction Sequencing Plan Phase 5 of 5

Scale: 1"=40'

0 40 80 160

Scale: 1" = 40' Feet

JESSICA M SAMURA
LICENSED PROFESSIONAL ENGINEER
NO. 16449-C
HAWAII, U.S.A.

LICENSE EXPIRES 4/30/28

THIS WORK WAS PREPARED BY ME OR UNDER MY SUPERVISION

STATE OF HAWAII
DEPARTMENT OF TRANSPORTATION
HIGHWAYS DIVISION

CONSTRUCTION SEQUENCING PLAN PHASE 5 OF 5

HILO BAYFRONT HIGHWAY
Intersection Improvements at Waianuenue Avenue
Federal Aid Project No. NH-019-2(076)

Scale: As Noted Date: Sep, 2026

SHEET No. 6 OF 6 SHEETS

ORIGINAL PLAN
NOTE BOOK
SURVEY PLOTTED BY DATE
DRAWN BY " "
TRACED BY " "
DESIGNED BY " "
QUANTITIES BY " "
CHECKED BY " "
No.

LAST UPDATE: Aug 14, 2026 @ 0627 jm
PLOT DATE: Sep 22, 2026 @ 0908 jm
PATH: I:\FILENAME\...\Sequencing Plan.dwg

FED. ROAD DIST. NO.	STATE	FED. AID PROJ. NO.	FISCAL YEAR	SHEET NO.	TOTAL SHEETS
HAWAII	HAW.	NH-019-2(076)	2026	25	106

Demolish Exist Conc Sidewalk (Approx. 140LF)
Demolish and Remove Exist AC Pavement
Remove Exist Sign And Post
Remove Exist Guardrail
Remove Exist Sign And Post
Remove Exist Steel Gate
Remove Exist Hedge (Approx. 145 LF)
Maintain and Protect Exist Sign
Demolish Exist Conc Curb (Approx. 523 LF)
Demolish Exist Conc Wall (Approx. 92 LF)
Demolish Exist Conc Curb/Barrier (Typ)
Hawaii Belt Road (State)
Demolish Exist Conc Curb (Approx. 125 LF)
Maintain and Protect Existing Sewer Manhole and Valve
Demolish Exist Conc Curb (Approx. 266 LF)
Remove Exist Sign and Post
Remove Exist Sign And Post
Demolish and Remove Exist CRM Wall
Remove Exist Conc Curb/Sidewalk
Demolish Exist Conc Curb (Approx. 70 LF)
Demolish Exist Conc Curb/Sidewalk
Remove 20 Trees
Maintain and Protect Manhole
Remove Exist Sign And Post
Maintain and Protect Existing Water Meter and Box
Demolish And Remove Drainage Inlet
Demolish Exist Conc Curb (Approx. 30 LF)
Remove Exist Sign And Post
Kamehameha Avenue (County)
Demolish And Remove Exist Catch Basin
Remove, Store, and Relocate Bicycle Rack
Demolish And Remove Exist Catch Basin
Remove Exist Sign And Post
Maintain and Protect Existing Sewer Manhole
Demolish And Remove Drainage Inlet
Demolish Exist Conc Curb/Sidewalk
Shipman Street (County)
Demolish and Remove Exist Conc Wheel Stop (Typ)
Remove, Salvage, and Return Fire Hydrant to Department of Water Supply
Maintain and Protect Exist Water Valve
Demolish Exist Conc Curb/Sidewalk
Demolish And Remove Exist Catch Basin
Remove Exist Sign And Post
Demolish Exist Conc Curb/Sidewalk
Remove, Store, and Relocate Existing Newspaper Stands
Maintain and Protect Existing Utility Pole
Waianuenue Avenue (County)
Wailuku Drive (County)

TMK: 2-3-04:07
ADDRESS: 10 KAMEHAMEHA AVENUE
OWNER: GENERAL CONTRACTOR LLC

TMK: 2-3-04:08
ADDRESS: 35 WAILUKU DRIVE
OWNER: STATE OF HAWAII,
COUNTY OF HAWAII EXECUTIVE ORDER

TMK: 2-3-04:16
ADDRESS: 9 SHIPMAN STREET
OWNER: F KOEHNEN LTD,
G E K MAMONE & SONS LLC A/S ON FEE

ADDRE
OWN
G E K MAMONE & SONS LLC A/S ON FEE

TMK: 2-3-04:09
ADDRESS: 10 KAMEHAMEHA AVENUE
OWNER: REDEVELOPMENT AGENCY

NOTES:
1. Existing lava rock curb that is to be removed shall be temporarily stored by the Contractor and then renaturalized/repurposed.

Match Line See Sheet 26

Legend

- Right-of-Way (ROW)
- Project Limits
- Existing to be Demolished
- Existing to Remain
- Remove Tree
- Removal of AC Pavement
- Removal of Concrete
- Clear and Grub
- Utility Line to be Demolished
- 8 FT Depth of Excavation For Seawall Stabilization

Demolition Plan

Scale: 1"=20'

TRUE NORTH
Scale: 1 In. = 30 Ft

0 20 40 60
Scale: 1" = 20' Feet

JESSICA M SAMURA
LICENSED PROFESSIONAL ENGINEER
NO. 16449-C
HAWAII, U.S.A.

LICENSE EXPIRES 4/30/28

THIS WORK WAS PREPARED BY ME OR UNDER MY SUPERVISION

STATE OF HAWAII
DEPARTMENT OF TRANSPORTATION
HIGHWAYS DIVISION

DEMOLITION PLAN

HILO BAYFRONT HIGHWAY
Intersection Improvements at Waianuenue Avenue
Federal Aid Project No. NH-019-2(076)

Scale: As Noted Date: Sep, 2026

SHEET No. 1 OF 2 SHEETS

ORIGINAL PLAN
NOTE BOOK
SURVEY PLOTTED BY DATE
DRAWN BY "
TRACED BY "
DESIGNED BY "
QUANTITIES BY "
CHECKED BY "
No.

LAST UPDATE: Aug 14, 2026 @ 0929 jym PLOT DATE: Sep 22, 2026 @ 0928 jym
PATH: F:\FILENAME\...\Bayfront Roundabout\Project Files\890 CADD\5 SHEETS\25-26_Demolition Plan.dwg

FED. ROAD DIST. NO.	STATE	FED. AID PROJ. NO.	FISCAL YEAR	SHEET NO.	TOTAL SHEETS
HAWAII	HAW.	NH-019-2(076)	2026	26	106

Hilo Bay

Demolish Exist Conc Curb (Approx. 520 LF)

Remove Exist Sign And Post

Remove Chain Link Fence (Approx. 455 LF)

Remove 26 Trees

Remove Exist Sign And Post

Demolish and Remove Exist AC Pavement

Bayfront Highway (State)

Maintain and Protect Exist Sign

Maintain and Protect Exist Sign

Demolish Exist Conc Curb/Sidewalk

Remove, Salvage, and Return Fire Hydrant to Department of Water Supply

Clear and Grub

Remove Exist Sign And Post

Maintain and Protect Exist Drainage Structures

Maintain and Protect Exist HTCO Manhole

Demolish Exist Conc Curb/Gutter (Approx. 520 LF)

Kamehameha Avenue (County)

Maintain and Protect Exist Sign

Maintain and Protect Exist CRM Wall

Haili Street (County)

Match Line See Sheet 25

Legend

- Right-of-Way (ROW)
- Project Limits
- Existing to be Demolished
- Existing to Remain
- 8 FT Depth of Excavation For Seawall Stabilization
- Remove Tree
- Removal of AC Pavement
- Removal of Concrete
- Clear and Grub

Demolition Plan

Scale: 1"=20'

TRUE NORTH
Scale: 1 in. = 20 ft

0 20 40 60
Scale: 1" = 20' Feet

JESSICA M SAMURA
LICENSED PROFESSIONAL ENGINEER
NO. 16449-C
HAWAII, U.S.A.

LICENSE EXPIRES 4/30/28

THIS WORK WAS PREPARED BY ME OR UNDER MY SUPERVISION

STATE OF HAWAII
DEPARTMENT OF TRANSPORTATION
HIGHWAYS DIVISION

DEMOLITION PLAN

HILO BAYFRONT HIGHWAY
Intersection Improvements at Waianuenue Avenue
Federal Aid Project No. NH-019-2(076)

Scale: As Noted Date: Sep, 2026

SHEET No. 2 OF 2 SHEETS

ORIGINAL PLAN
NOTE BOOK
SURVEY PLOTTED BY DATE
DRAWN BY "
TRACED BY "
DESIGNED BY "
QUANTITIES BY "
CHECKED BY "
No.

LAST UPDATE: Aug 14, 2026 @ 0839 jm
PLOT DATE: Sep 22, 2026 @ 0829 jm
PATH/FILENAME: C:\Users\BMcCorm\AppData\Local\Temp\AcPublish_4\Project Files\ESRI 12x18\Sheet 26 - Demolition Plans.dwg

FED. ROAD DIST. NO.	STATE	FED. AID PROJ. NO.	FISCAL YEAR	SHEET NO.	TOTAL SHEETS
HAWAII	HAW.	NH-019-2(076)	2026	27	106

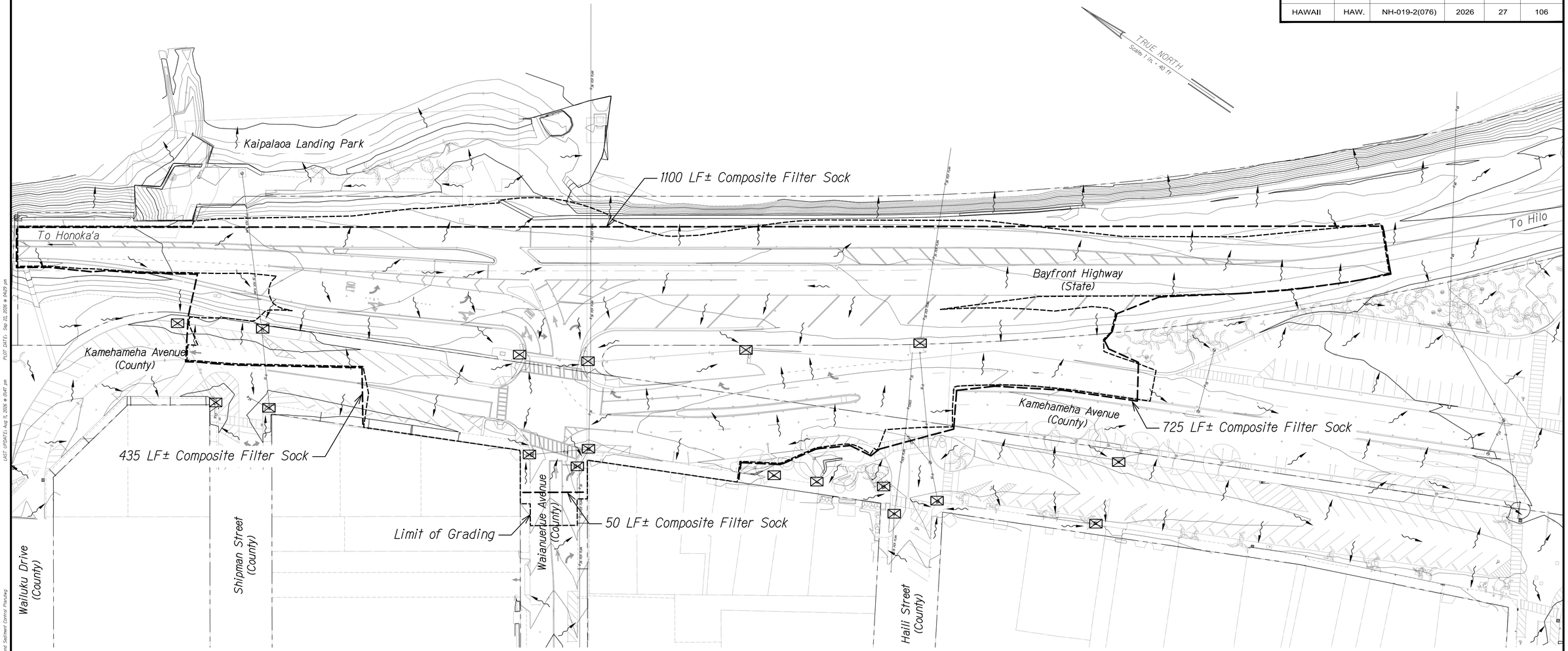

Erosion Control Plan

Scale: 1"=40'

Legend

- Right-of-Way (ROW)
- Composite Filter Sock, See Sheet ## Erosion Control Details for Detail
- Surface Runoff Direction
- Inlet Protection, See Sheet ## Erosion Control Details for Detail
- Limits of Grading

NOTES:

1. Sediment and Erosion Control BMP measures shown in the Contract Documents are minimum BMPs requirements and do not constitute an acceptable and/or complete Sediment Control Plan. The Contractor shall incorporate additional BMPs based upon their means and methods considering site conditions and construction sequence in accordance with the Contract Documents including applicable permit document requirements. Cost shall be included in Pay Item 209.0100, Installation, Maintenance, Monitoring, and Removal of BMP.

ORIGINAL PLAN
NOTE BOOK
SURVEY PLOTTED BY DATE
DRAWN BY "
TRACED BY "
DESIGNED BY "
QUANTITIES BY "
CHECKED BY "
No.

JESSICA M SAMURA
LICENSED PROFESSIONAL ENGINEER
NO. 16449-C
HAWAII, U.S.A.

LICENSE EXPIRES 4/30/28

THIS WORK WAS PREPARED BY ME OR UNDER MY SUPERVISION

0 40 80 120
Scale: 1" = 40' Feet

STATE OF HAWAII
DEPARTMENT OF TRANSPORTATION
HIGHWAYS DIVISION

EROSION CONTROL PLAN

HILO BAYFRONT HIGHWAY
Intersection Improvements at Waianuenue Avenue
Federal Aid Project No. NH-019-2(076)

Scale: As Noted Date: Sep, 2026

SHEET No. / OF / SHEETS

27

PLOT DATE: Sep 22, 2026 @ 0429 pm
LAST UPDATE: Aug 5, 2026 @ 0947 pm
PATH/FILENAME: C:\Users\$MacGrome\AppData\Local\Autodesk\ACCDocs\E4ECDM21-1\ME\RUS\607898\Hilo Bayfront Roundabout\Project Files\ERD CAD\ERD SHEETS\ET_Erosion and Sediment Control Plan.dwg

FED. ROAD DIST. NO.	STATE	FED. AID PROJ. NO.	FISCAL YEAR	SHEET NO.	TOTAL SHEETS
HAWAII	HAW.	NH-019-2(076)	2026	28	106

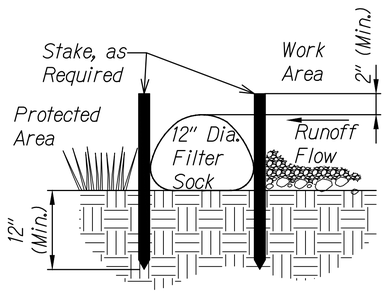

Section (Anchoring)

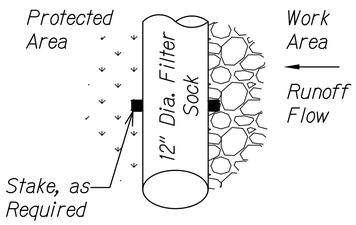

Plan (Anchoring)

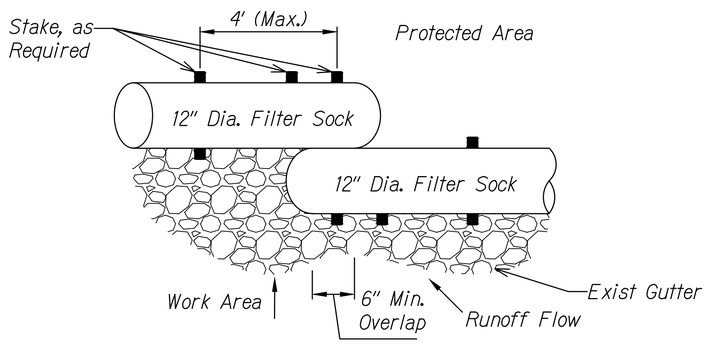

Overlap (Anchoring)

Notes:

1. Installation, Inspection, Maintenance and Removal of Compost Filter Socks shall be done in accordance with Manufacturer's Recommendations.
2. Provide Necessary Training for Personnel who will be Responsible for Implementation of BMPS.

Compost Filter Sock Installation

Not to Scale

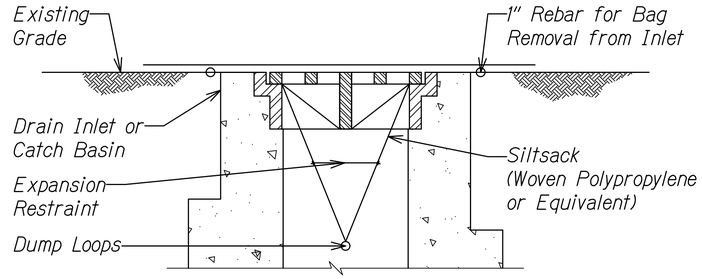

Grated Drain Inlet Protection

Not to Scale

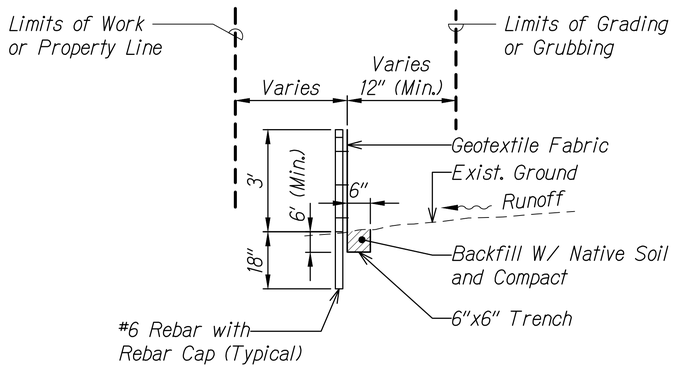

Section

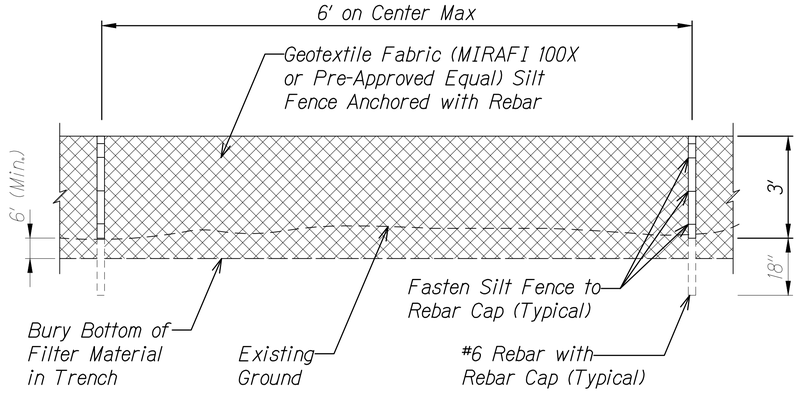

Elevation

Silt Fence

Not to Scale

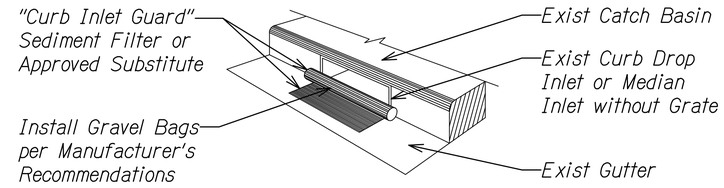

Note:
"Curb Inlet Guard is Manufactured by Ertec Environmental Systems.

At Catch Basin

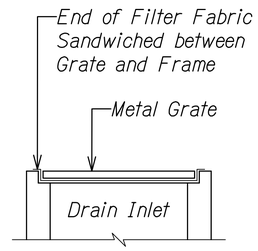

Section

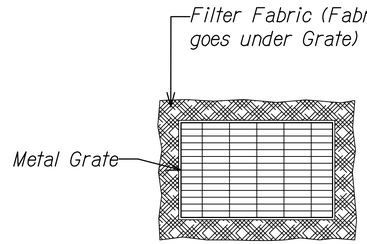

Plan

At Drain Inlet

Sediment Control Filter Detail

Not to Scale

JESSICA M SAMURA
LICENSED PROFESSIONAL ENGINEER
NO. 16449-C
HAWAII, U.S.A.

LICENSE EXPIRES 4/30/28

THIS WORK WAS PREPARED BY ME OR UNDER MY SUPERVISION

STATE OF HAWAII
DEPARTMENT OF TRANSPORTATION
HIGHWAYS DIVISION

EROSION CONTROL DETAILS

HILO BAYFRONT HIGHWAY
Intersection Improvements at Waianuenue Avenue
Federal Aid Project No. NH-019-2(076)

Scale: As Noted Date: Sep, 2026

SHEET No. / OF / SHEETS

28

ORIGINAL PLAN | NOTE BOOK | SURVEY PLOTTED BY | DRAWN BY | TRACED BY | DESIGNED BY | QUANTITIES BY | CHECKED BY | DATE

LAST UPDATE: Aug 13, 2026 @ 11:51 am PLOT DATE: Sep 22, 2026 @ 04:29 pm

PATH/FILENAME: C:\Users\EMcGrorty\AppData\Local\Temp\AcPublish_6472\Doc[6]ACCOMEC1-MEP\EUS-HDR\Hilo Bayfront Roundabout\Project Files\EROSION CONTROL DETAILS.dwg SHEET SIZE: 24.00in x 36.00in Erosion Control Details.dwg

FED. ROAD DIST. NO.	STATE	FED. AID PROJ. NO.	FISCAL YEAR	SHEET NO.	TOTAL SHEETS
HAWAII	HAW.	NH-019-2(076)	2026	29	106

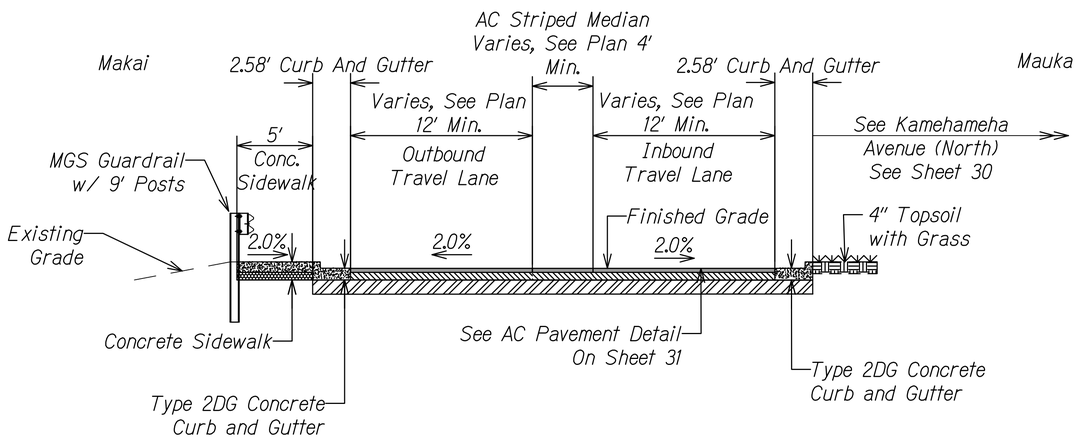

Bayfront Highway / Hawaii Belt Road (North) Section

Scale: 1"=5'

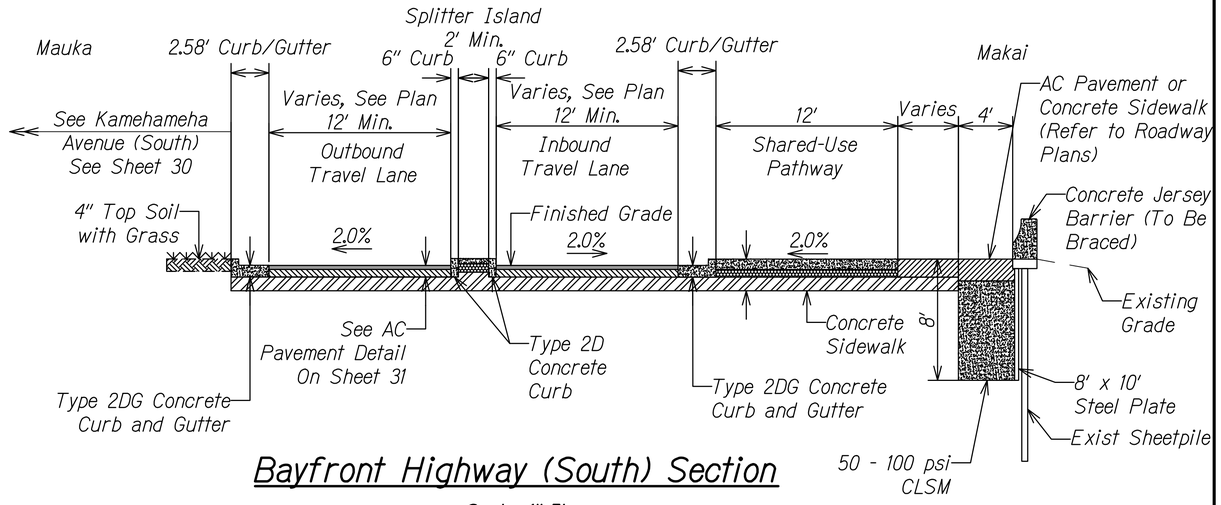

Bayfront Highway (South) Section

Scale: 1"=5'

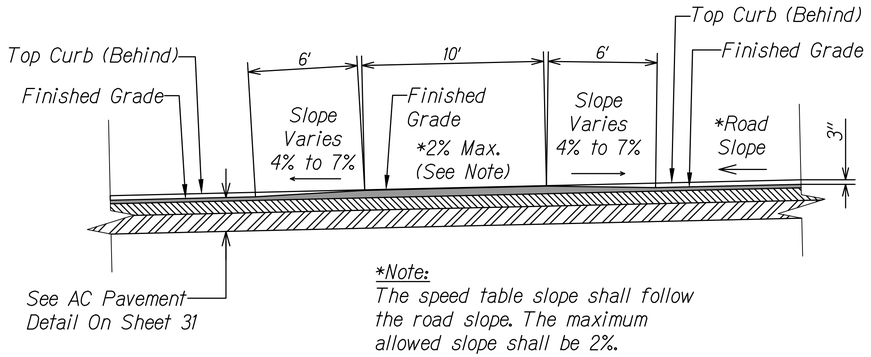

*Note:
The speed table slope shall follow the road slope. The maximum allowed slope shall be 2%.

Cross Section

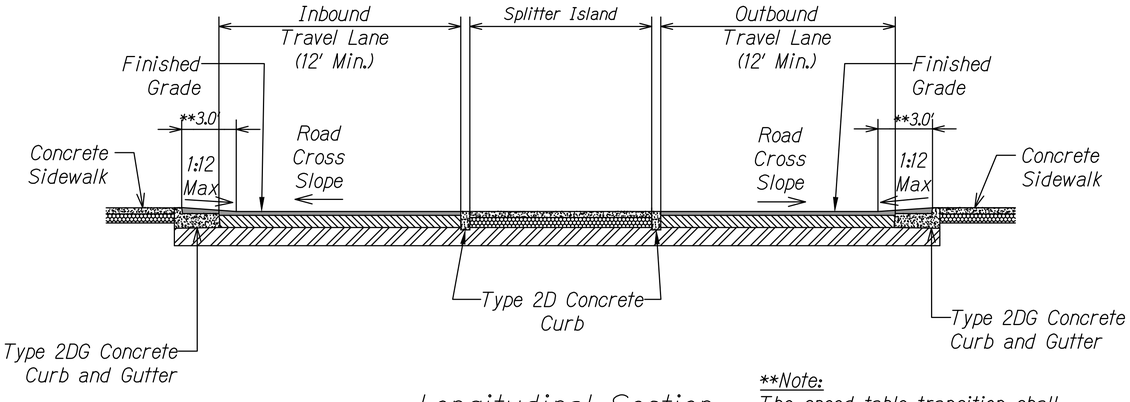

Longitudinal Section

**Note:
The speed table transition shall enter the travel lane. The transition slope shall not exceed 1:12 slope.

PMA Raised Crosswalk

Not To Scale

Notes:
1. All sections are drawn facing the proposed roundabout.
2. All concrete sidewalks are to be constructed per HDOT Standard Plan D-15.
3. Type 2D and type 2DG curb and gutters are to be constructed per HDOT Standard Plan D-05.

0 5 10 20
Scale: 1" = 5' Feet

JESSICA M SAMURA
LICENSED PROFESSIONAL ENGINEER
NO. 16449-C
HAWAII, U.S.A.

LICENSE EXPIRES 4/30/28

THIS WORK WAS PREPARED BY ME OR UNDER MY SUPERVISION

STATE OF HAWAII
DEPARTMENT OF TRANSPORTATION
HIGHWAYS DIVISION

TYPICAL SECTIONS

HILO BAYFRONT HIGHWAY
Intersection Improvements at Waianuenue Avenue
Federal Aid Project No. NH-019-2(076)

Scale: As Noted Date: Sep, 2026

SHEET No. 1 OF 3 SHEETS

29

ORIGINAL PLAN | SURVEY PLOTTED BY | DRAWN BY | TRACED BY | DESIGNED BY | QUANTITIES BY | CHECKED BY | DATE | NOTE BOOK | No.

LAST UPDATE: Jul 30, 2026 @ 07:28 am PLOT DATE: Sep 22, 2026 @ 04:29 pm
PATH/FILENAME: c:\Users\JMcCormick\AppData\Local\Temp\AcPublish_6748\Hilo Bayfront Roundabout\Project Files\B90 CAD\B30 SHEETS\B29-3-Typical Sections.dwg

FED. ROAD DIST. NO.	STATE	FED. AID PROJ. NO.	FISCAL YEAR	SHEET NO.	TOTAL SHEETS
HAWAII	HAW.	NH-019-2(076)	2026	30	106

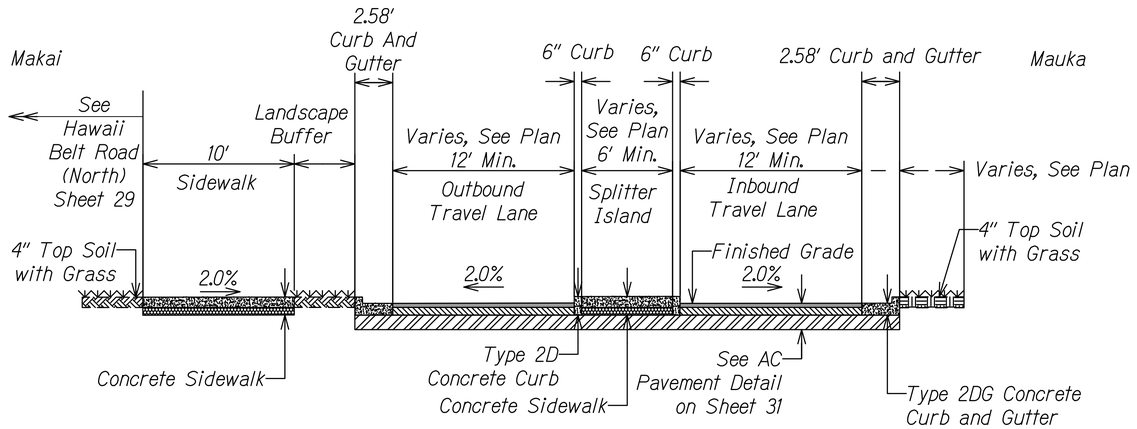

Without Parking

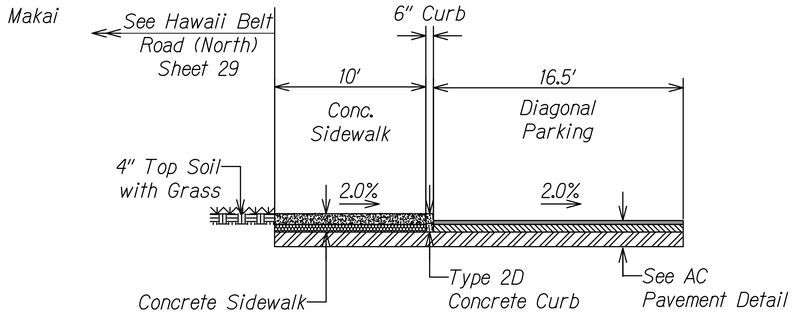

At Diagonal Parking

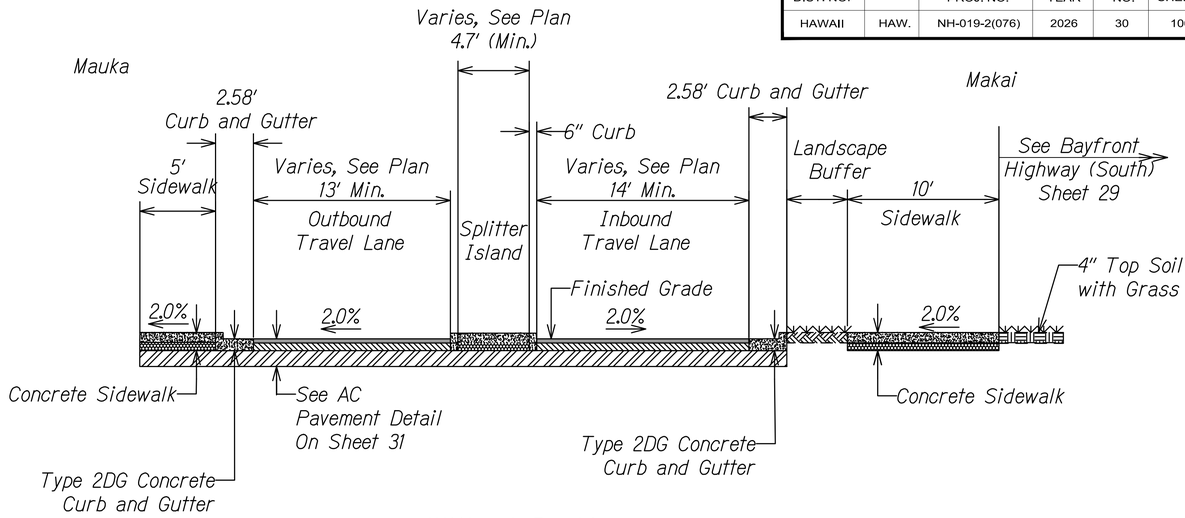

Without Parking

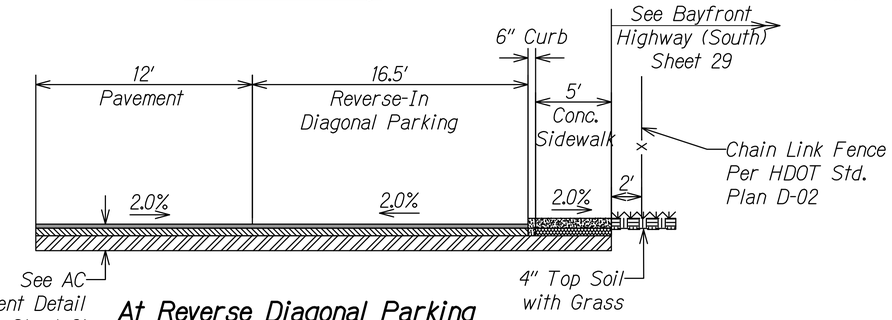

At Reverse Diagonal Parking

Kamehameha Avenue (North)

Scale: 1″=5′

Kamehameha Avenue (South)

Scale: 1″=5′

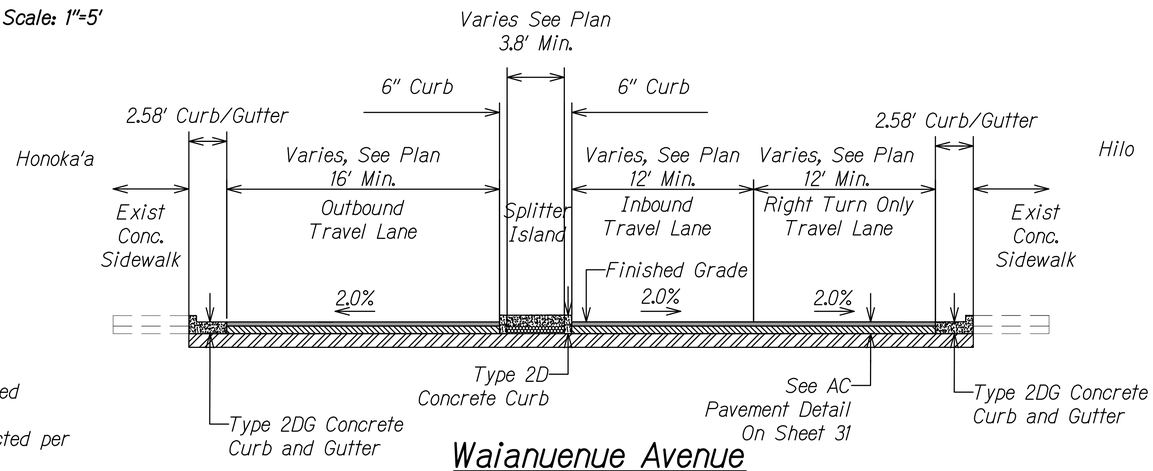

Waianuenue Avenue

Scale: 1″=5′

Notes:
1. All sections are drawn facing the proposed roundabout.
2. All concrete sidewalks are to be constructed per HDOT Standard Plan D-15.
3. Type 2D and type 2DG curb and gutters are to be constructed per HDOT Standard Plan D-05.

0 5 10 20
Scale: 1″ = 5′ Feet

JESSICA M SAMURA
LICENSED PROFESSIONAL ENGINEER
NO. 16449-C
HAWAII, U.S.A.

LICENSE EXPIRES 4/30/28

THIS WORK WAS PREPARED BY ME OR UNDER MY SUPERVISION

STATE OF HAWAII
DEPARTMENT OF TRANSPORTATION
HIGHWAYS DIVISION

TYPICAL SECTIONS

HILO BAYFRONT HIGHWAY
Intersection Improvements at Waianuenue Avenue
Federal Aid Project No. NH-019-2(076)

Scale: As Noted Date: Sep, 2026

SHEET No. 2 OF 3 SHEETS

ORIGINAL PLAN
NOTE BOOK
SURVEY PLOTTED BY DATE
DRAWN BY " "
TRACED BY " "
DESIGNED BY " "
QUANTITIES BY " "
CHECKED BY " "

LAST UPDATE: Jul 30, 2026 @ 07:28 am PLOT DATE: Sep 22, 2026 @ 04:29 pm
PATH:F:\LENANG C:\Users\MGomes\AppData\Local\Temp\AcPublish_6076\Hilo Bayfront Roundabout\Project Files\ROW CAD\ROW SHEETS\ROW-3_Typical Sections.dwg

FED. ROAD DIST. NO.	STATE	FED. AID PROJ. NO.	FISCAL YEAR	SHEET NO.	TOTAL SHEETS
HAWAII	HAW.	NH-019-2(076)	2026	31	106

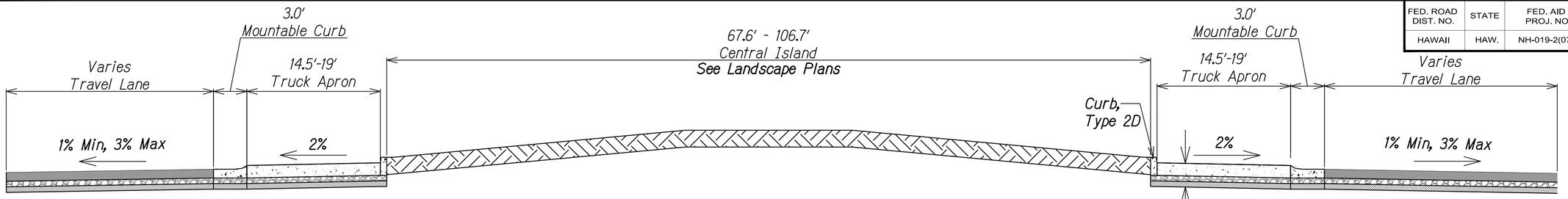

Center of Roundabout Detail

Scale: 1"=5'

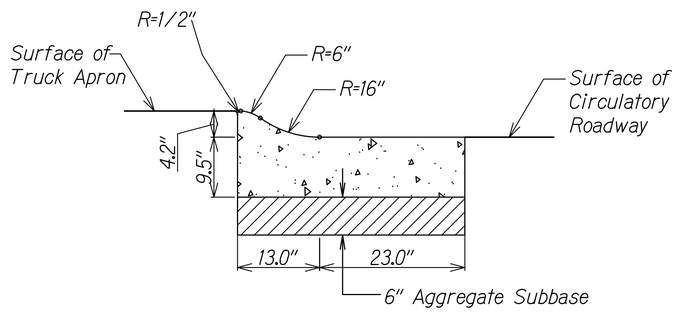

Mountable Curb Detail

Not to Scale

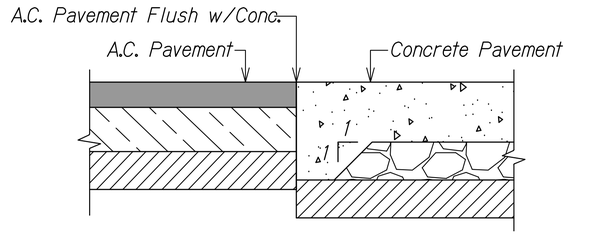

New Concrete to Existing AC Connection Detail

Not to Scale

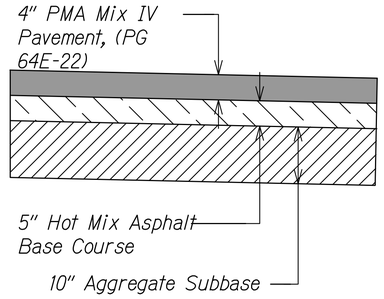

AC Pavement Section Detail (Kamehameha Avenue and Waianuenue Avenue)

Not to Scale

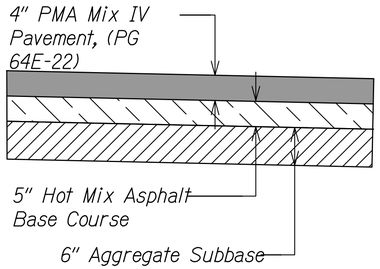

AC Pavement Section Detail (Hawaii Belt Road / Bayfront Highway)

Not to Scale

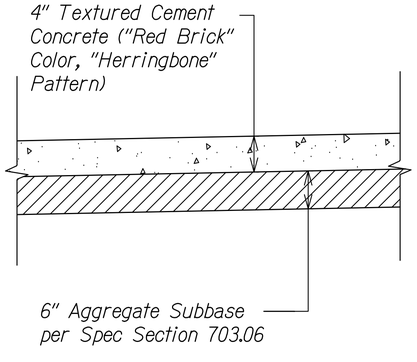

Splitter Island Detail

Not to Scale

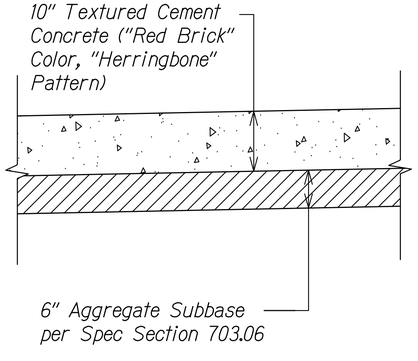

Truck Apron Section Detail

Not to Scale

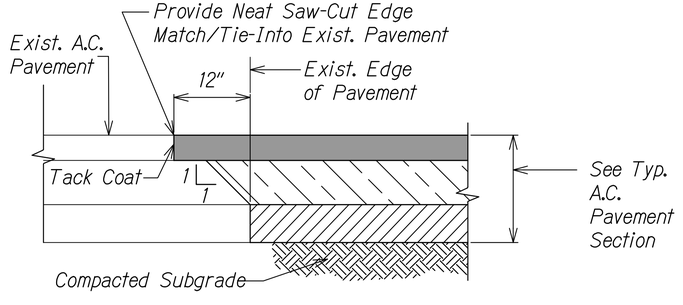

New AC to Existing AC Connection Detail

Not to Scale

Notes:

1. New Construction Shall Be Equal Or Better Than Existing In Thickness and In Quality.
2. Pavement Slope Shall Match Existing Pavement Slope So As To Provide Smooth Riding Connection.

JESSICA M SAMORA
LICENSED PROFESSIONAL ENGINEER
NO. 16449-C
HAWAII, U.S.A.

LICENSE EXPIRES 4/30/28

THIS WORK WAS PREPARED BY ME OR UNDER MY SUPERVISION

STATE OF HAWAII
DEPARTMENT OF TRANSPORTATION
HIGHWAYS DIVISION

TYPICAL SECTIONS

HILO BAYFRONT HIGHWAY
Intersection Improvements at Waianuenue Avenue
Federal Aid Project No. NH-019-2(076)

Scale: As Noted Date: Sep, 2026

SHEET No. 3 OF 3 SHEETS

31

ORIGINAL PLAN
NOTE BOOK
SURVEY PLOTTED BY DATE
DRAWN BY " "
TRACED BY " "
DESIGNED BY
QUANTITIES BY
CHECKED BY

PATH/FILENAME: c:\Users\McDonald\ADC\ACCDocs\EAC\WE21-AMERIGH-6D7484\Hilo Bayfront Roundabout\Project Files\890 CADD\20 SHEETS\29-31_Typical Sections.dwg
LAST UPDATE: Jul 30, 2026 @ 07:28 am PLOT DATE: Sep 22, 2026 @ 04:39 pm

FED. ROAD DIST. NO.	STATE	FED. AID PROJ. NO.	FISCAL YEAR	SHEET NO.	TOTAL SHEETS
HAWAII	HAW.	NH-019-2(076)	2026	32	106

MGS Guardrail with 9' Posts
Conc. Sidewalk
Type 2D Conc. Curb
Travel Lane
Speed Table (See Sheet 61 For Detail)
Splitter Island
Driveway per HDOT D-06 (See Sheet 46, Enlarged Grading Plan)
Concrete Shared Use Path
Type 2DG Conc. C&G
Retaining Wall (See Sheet 43, Wall Profile)
End of Retaining Wall, Connect to Existing Jersey Barrier
WAILUKU RIVER SEWAGE PUMP SITE
PARCEL 2
To Honoka'a
Hawaii Belt Road (State)
12' Min.
13'
5'
Outbound
Inbound
10'
12'
Cattle Gate
Truck Apron
Type 2D Conc. Curb
CLSM
4'
Splitter Island
19'
45°
Mountable Conc. Curb
Central Island
Infiltration Basin
Raised PMA Crosswalk
North Island
Welcome to Hilo Sign
Conc. Sidewalk
Type 2D Conc. Curb
Raised Conc. Crosswalk
Type 2DG Conc. C&G
New Chainlink Fence
10 New Parking Spaces
Existing Parking to Remain
Kamehameha Avenue (County)
35°
Type 2DG Conc. C&G
Outbound
Inbound
Kamehameha Avenue (County)
Existing Parking
Type 2D Conc. Curb
Raised PMA Crosswalk
Conc. Sidewalk
Relocated Bicycle Rack
Splitter Island
Match Existing Conc. Sidewalk
Outbound
Inbound
Raised PMA Crosswalk
Freight Loading Zone
Raised PMA Crosswalk
Splitter Island
Waianuenue Avenue (County)
Wailuku Drive (County)
Shipman Street (County)
TMK: 2-3-04:07
ADDRESS: 10 KAMEHAMEHA AVENUE
OWNER: GENERAL CONTRACTOR LLC
TMK: 2-3-04:02
ADDRESS: 9 SHIPMAN STREET
OWNER: F KOEHNEN LTD.
G E K MAMONE & SONS LLC
TMK: 2-3-04:16
ADDRESS: 9 SHIPMAN STREET
OWNER: F KOEHNEN LTD.
G E K MAMONE & SONS LLC A/S ON FEE
TMK: 2-3-04:08
ADDRESS: 35 WAILUKU DRIVE
OWNER: STATE OF HAWAII
COUNTY OF HAWAII EXECUTIVE ORDER
TMK: 2-3-03:11
ADDRESS: 100 KAMEHAMEHA AVENUE
OWNER: RED SEA ENTERPRISES LLC
Match Line See Sheet 33

NOTES:
1. See Staking Plan and Data Sheets for tie-down information.

Legend

- Right-of-Way (ROW)
- Project Limits
- New Concrete Sidewalk
- Truck Apron
- CLSM (See Sheet 29, Typical Sections)
- Cattle Gate per HDOT D-01
- 4'-High Chainlink Fence per HDOT D-02
- FH Proposed Fire Hydrant
- Existing Light Pole
- 85W LED Street Light, See Electrical Plans
- Type B Catch Basin, per HDOT H-01B
- Type C Catch Basin, per HDOT H-01C
- Type D Catch Basin, per HDOT H-01D
- DMH Proposed SDMH Manhole
- Drain Inlet
- Electrical Pull Box
- CCTV Pull Box
- 100W LED Street Light, See Electrical Plans

Roadway Plan

Scale: 1"=20'

TRUE NORTH
Scale: 1 In. = 20 Ft.

0 20 40 60
Scale: 1" = 20' Feet

JESSICA M SAMURA
LICENSED PROFESSIONAL ENGINEER
NO. 16449-C
HAWAII, U.S.A.

LICENSE EXPIRES 4/30/28

THIS WORK WAS PREPARED BY ME OR UNDER MY SUPERVISION

STATE OF HAWAII
DEPARTMENT OF TRANSPORTATION
HIGHWAYS DIVISION

ROADWAY PLAN

HILO BAYFRONT HIGHWAY
Intersection Improvements at Waianuenue Avenue
Federal Aid Project No. NH-019-2(076)

Scale: As Noted Date: Sep, 2026

SHEET No. 1 OF 2 SHEETS

ORIGINAL PLAN	SURVEY PLOTTED BY	DATE
	DRAWN BY	"
NOTE BOOK	TRACED BY	"
	DESIGNED BY	"
No.	QUANTITIES BY	"
	CHECKED BY	"

PATH/FILENAME: c:\Users\kcornish\AECOM\Documents\Project Files\B90 CAD\B20 SHEETS\B32-33-Roadway Plan.dwg
LAST UPDATE: Aug 20, 2026 @ 09:43 am PLOT DATE: Sep 22, 2026 @ 08:37 pm

FED. ROAD DIST. NO.	STATE	FED. AID PROJ. NO.	FISCAL YEAR	SHEET NO.	TOTAL SHEETS
HAWAII	HAW.	NH-019-2(076)	2026	33	106

TRUE NORTH
Scale: 1 in. = 20 ft

Concrete Shared-Use Path
Splitter Island
Hilo Bay
Bike Ramp
Type 2DG Conc. C&G
Type 2D Conc. Curb
Match Existing Pavement Marking (End Lane Tapering)
Travel Lane
Begin Lane Tapering
4'
CLSM
13'
12'
Bayfront Highway (State)
12' Min.
12' Min.
10'
11'
11'
New Chainlink Fence
South Island
Infiltration Basin
5'
Conc. Sidewalk
Type 2D Conc. Curb
10' Wide Paved Shoulder
Begin Lane Tapering
18 New Reverse Diagonal Parking
Bike Ramp
12'
11' Min.
11' Min.
ONLY
Type 2DG Conc. C&G
Match Line See Sheet 32
Type 2DG Conc. C&G
Type 2D Conc. Curb
Existing Conc. Median
Travel Lane
Kamehameha Avenue
5'
Curb Ramp To Remain
Type 2DG Conc. Curb
Kalakaua Street
Splitter Island

TMK: 2-3-03:03
OWNER: STATE OF HAWAII

TMK: 2-3-02:11
OWNER: STATE OF HAWAII

TMK: 2-3-02:22
ADDRESS: KAMEHAMEHA AVENUE
OWNER: STATE OF HAWAII

JESSICA M SAMURA
LICENSED PROFESSIONAL ENGINEER
NO. 16449-C
HAWAII, U.S.A.

LICENSE EXPIRES 4/30/28

THIS WORK WAS PREPARED BY ME OR UNDER MY SUPERVISION

Legend

- Right-of-Way (ROW)
- Project Limits
- Existing to Remain
- New Concrete Sidewalk
- Truck Apron
- Cattle Gate per HDOT D-01
- 4'-High Chainlink Fence per HDOT D-02
- FH Proposed Fire Hydrant
- Existing Light Pole
- 85W LED Street Light, See Electrical Plans
- Proposed Type B Catch Basin
- Proposed Type C Catch Basin
- Proposed Type D Catch Basin
- Proposed Manhole
- CLSM (See Sheet 29, Typical Sections)
- Electrical Pull Box
- 100W LED Street Light, See Electrical Plans

Roadway Plan

Scale: 1"=20'

NOTES:
1. See Staking Plan and Data Sheets for tie-down information.

0 20 40 60
Scale: 1" = 20' Feet

STATE OF HAWAII
DEPARTMENT OF TRANSPORTATION
HIGHWAYS DIVISION

ROADWAY PLAN

HILO BAYFRONT HIGHWAY
Intersection Improvements at Waianuenue Avenue
Federal Aid Project No. NH-019-2(076)

Scale: As Noted Date: Sep, 2026

SHEET No. 2 OF 2 SHEETS

33

ORIGINAL PLAN
NOTE BOOK
No.
SURVEY PLOTTED BY: DATE
DRAWN BY " "
TRACED BY " "
DESIGNED BY " "
QUANTITIES BY " "
CHECKED BY " "

LAST UPDATED: Aug 20, 2026 @ 09:43 am PLOT DATE: Sep 22, 2026 @ 04:31 pm
PATH/FILENAME: C:\Users\BMcCormick\AEDC\AECOM\ECI-MERGE\19\NH-Hilo Bayfront Roundabout\Project Files\800 CADD\3 SHEETS\33_Roadway Plan.dwg

FED. ROAD DIST. NO.	STATE	FED. AID PROJ. NO.	FISCAL YEAR	SHEET NO.	TOTAL SHEETS
HAWAII	HAW.	NH-019-2(076)	2026	34	106

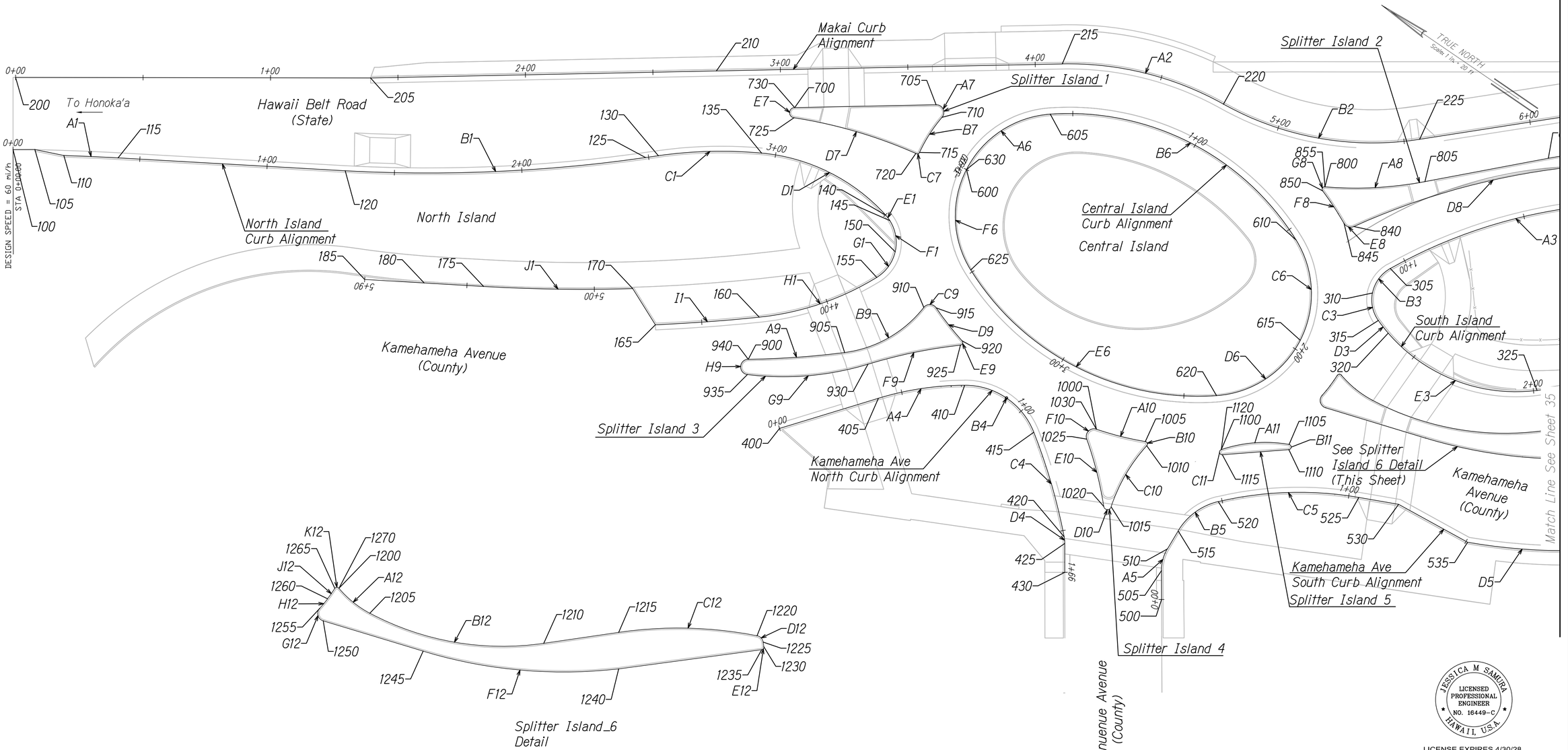

Staking Plan

Scale: 1"=20'

NOTES:

1. See Staking Data Sheets for coordinate and curve information.
2. All alignments, points and curves on curb and gutter are at lip of gutter. Barrier curb points are at bottom face of curb.
3. Coordinates are based on benchmark and control points shown on Overall Site Plan.

Scale: 1" = 20' — 0 20 40 60 Feet

JESSICA M SAMURA
LICENSED PROFESSIONAL ENGINEER
NO. 16449-C
HAWAII, U.S.A.

LICENSE EXPIRES 4/30/28

THIS WORK WAS PREPARED BY ME OR UNDER MY SUPERVISION

STATE OF HAWAII
DEPARTMENT OF TRANSPORTATION
HIGHWAYS DIVISION

STAKING PLAN

HILO BAYFRONT HIGHWAY
Intersection Improvements at Waianuenue Avenue
Federal Aid Project No. NH-019-2(076)

Scale: As Noted — Date: Sep, 2026

SHEET No. 1 OF 2 SHEETS

ORIGINAL PLAN | NOTE BOOK | SURVEY PLOTTED BY | DRAWN BY | TRACED BY | DESIGNED BY | QUANTITIES BY | CHECKED BY | DATE | No.

PATH+FILENAME: C:\Users\MaCromia\AECOM\ACCDocs\BAECOMEI-AMERUS-697\NBHH-Hilo Bayfront Roundabout\Project Files\800 CADD\3 SHEETS\34-35_Staking Plans.dwg
LAST UPDATE: Aug 13, 2026 @ 03:37 pm
PLOT DATE: Sep 22, 2026 @ 04:31 pm

FED. ROAD DIST. NO.	STATE	FED. AID PROJ. NO.	FISCAL YEAR	SHEET NO.	TOTAL SHEETS
HAWAII	HAW.	NH-019-2(076)	2026	35	106

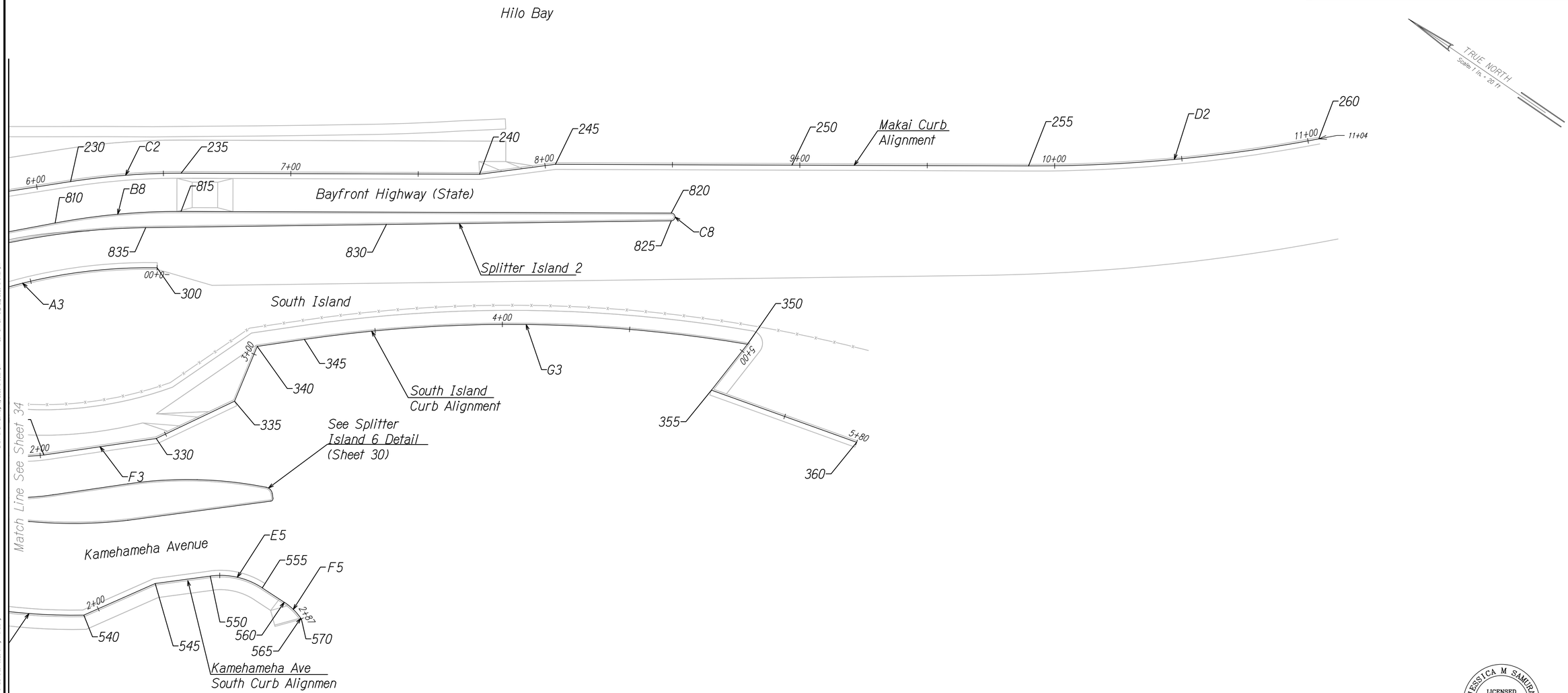

NOTES:

1. See Staking Data Sheets for coordinate and curve information.
2. All alignments, points and curves on curb and gutter are at lip of gutter. Barrier curb points are at bottom face of curb.
3. Coordinates are based on benchmark and control points shown on Overall Site Plan.

Staking Plan

Scale: 1"=20'

0 20 40 60

Scale: 1" = 20' Feet

JESSICA M SAMURA
LICENSED PROFESSIONAL ENGINEER
NO. 16449-C
HAWAII, U.S.A.

LICENSE EXPIRES 4/30/28

THIS WORK WAS PREPARED BY ME OR UNDER MY SUPERVISION

STATE OF HAWAII
DEPARTMENT OF TRANSPORTATION
HIGHWAYS DIVISION

STAKING PLAN

HILO BAYFRONT HIGHWAY
Intersection Improvements at Waianuenue Avenue
Federal Aid Project No. NH-019-2(076)

Scale: As Noted Date: Sep, 2026

SHEET No. 2 OF 2 SHEETS

ORIGINAL PLAN
NOTE BOOK
No.
SURVEY PLOTTED BY DATE
DRAWN BY "
TRACED BY "
DESIGNED BY "
QUANTITIES BY "
CHECKED BY "

LAST UPDATE: Aug 10, 2026 @ 03:31 pm PLOT DATE: Sep 22, 2026 @ 04:31 pm
PATH/FILENAME: c:\Users\kmcornell\AECOM\ACCDocs\AECOM21-AMERIGS-6074894-Hilo Bayfront Roundabout\Project Files\890 CADD\20 SHEETS\34-35_Staking Plans.dwg

	No.	Point	Station	Northing	Easting	Delta	Radius	Tangent	Length	Elevation
North Island Curb Alignment	100	BP	0+00.00	326094.973	641011.978					15.99
	105	PI	0+08.56	326087.860	641016.737					15.92
	110	PC	0+20.18	326077.058	641021.022					15.71
	A1					1°31'41"(RT)	798.17	10.64	21.29	
	115	PT	0+41.47	326058.770	641031.916					15.52
	120	PC	1+30.70	325981.509	641076.558					14.45
	B1					11°14'22"(LT)	602.00	59.24	118.09	
	125	PT	2+48.79	325885.867	641145.504					12.76
	130	PC	2+53.89	325882.044	641148.876					12.69
	C1					13°26'46"(RT)	173.16	20.41	40.64	
	135	PCC	2+94.52	325848.704	641171.947					13.08
	D1					42°29'20"(RT)	75.00	29.16	55.62	
	140	PCC	3+50.14	325794.725	641178.303					12.61
	E1					9°31'02"(RT)	16.00	1.33	2.66	
	145	PCC	3+52.80	325792.219	641177.426					12.09
	F1					45°36'43"(RT)	16.00	6.73	12.74	
	150	PCC	3+65.54	325783.736	641168.376					11.98
	G1					45°36'43"(RT)	16.00	6.73	12.74	
	155	PRC	3+78.27	325784.270	641155.984					12.02
	H1					25°33'19"(LT)	110.00	24.95	49.06	
	160	PCC	4+27.34	325814.258	641117.667					10.57
	I1					3°28'08"(LT)	674.82	20.43	40.86	
	165	PT	4+68.19	325846.692	641092.833					10.21
	170	PC	4+84.93	325861.899	641099.823					10.13
	J1					5°04'43"(LT)	660.32	29.28	58.53	
	175	PT	5+43.46	325911.274	641068.429					9.61
	180	PI	5+66.82	325931.521	641056.782					9.83
	185	EP	5+90.17	325951.767	641045.136					
Makai Curb Alignment	200	BP	0+00.00	326109.702	641036.229					
	205	PI	1+39.23	325993.175	641112.424					
	210	PI	2+74.93	325881.254	641189.154					12.42
	215	PC	4+10.63	325769.329	641265.886					12.28
	A2					30°20'38"(RT)	124.50	33.76	65.94	
	220	PRC	4+76.56	325707.809	641287.381					12.16
	B2					38°00'52"(LT)	120.00	41.34	79.62	
	225	PT	5+56.18	325635.922	641318.077					11.47
	230	PC	6+13.40	325593.477	641356.453					11.75
	C2					9°02'12"(RT)	276.00	21.81	43.53	
	235	PT	6+56.94	325559.020	641382.982					12.00
	240	PI	7+74.09	325460.846	641446.908					12.40
	245	PI	8+04.09	325438.113	641466.484					12.27
	250	PI	8+96.91	325360.324	641517.136					11.92
	255	PC	9+89.76	325282.521	641567.798					11.13
	D2					11°03'03"(LT)	594.00	57.46	114.57	
	260	EP	11+04.33	325193.525	641639.579					10.77
South Island Curb Alignment	300	BP	0+00.00	325546.526	641346.797					11.75
	A3					14°57'54"(LT)	203.98	26.79	53.28	
	305	PCC	1+06.43	325617.754	641269.394					11.84
	B3					49°33'39"(LT)	14.15	6.53	12.24	
	310	PCC	1+18.67	325618.316	641257.546					11.80
	C3					46°17'29"(LT)	14.00	5.98	11.31	
	315	PCC	1+29.98	325610.487	641249.810					11.94
	D3					5°26'56"(LT)	66.00	3.14	6.28	
	320	PCC	1+36.25	325604.547	641247.790					11.98
	E3					56°33'51"(LT)	66.00	35.51	65.16	

	No.	Point	Station	Northing	Easting	Delta	Radius	Tangent	Length	Elevation
South Island Curb Alignment	325	PCC	2+01.41	325543.421	641261.029					11.51
	F3					0°03'53"(LT)	39468.83	22.29	44.58	
	330	PT	2+45.99	325510.088	641290.630					11.85
	335	PI	2+80.02	325492.411	641319.6713					11.95
	340	PI	3+03.31	325496.777	641342.586					12.27
	345	PC	3+22.02	325482.792	641355.014					12.14
	G3					17°57'34"(RT)	557.00	88.02	174.59	
	350	PT	4+96.61	325336.377	641448.804					11.61
	355	PI	5+19.49	325338.293	641426.007					10.93
	360	EP	5+80.01	325279.446	641440.149					
Kamehameha Ave North Curb Alignment	400	BP	0+00.00	325783.679	641085.559					10.85
	405	PC	0+40.53	325757.735	641116.698					11.22
	A4					16°40'41"(RT)	118.00	17.30	34.35	
	410	PCC	0+74.88	325732.242	641139.539					11.57
	B4					68°49'43"(RT)	29.00	19.87	34.84	
	415	PCC	1+09.72	325699.464	641139.027					11.34
	C4					10°28'21"(RT)	234.00	21.45	42.77	
	420	PCC	1+52.49	325667.009	641111.265					10.36
	D4					9°07'52"(RT)	16.28	1.30	2.59	
	425	PT	1+55.08	325665.407	641109.228					10.36
	430	EP	1+66.40	325659.191	641099.769					10.68
Kamehameha Ave South Curb Alignment	500	BP	0+00.00	325621.583	641111.698					10.70
	505	PC	0+11.33	325627.822	641121.160					10.53
	A5					31°03'58"(RT)	16.50	4.59	8.95	
	510	PT	0+20.28	325630.545	641129.567					10.61
	515	PC	0+28.43	325630.888	641137.714					11.00
	B5					45°56'05"(RT)	25.00	10.60	20.04	
	520	PCC	0+48.48	325624.038	641155.983					11.02
	C5					23°03'17"(RT)	138.00	28.14	55.53	
	525	PT	1+04.01	325578.831	641187.579					11.56
	530	PI	1+19.82	325564.322	641193.865					11.96
	535	PC	1+50.70	325533.534	641196.305					11.53
	D5					10°56'23"(LT)	226.00	21.64	43.15	
	540	PT	1+93.85	325495.811	641217.124					12.11
	545	PI	2+24.45	325479.221	641242.828					12.79
	550	PC	2+46.26	325462.735	641257.110					12.99
	E5					40°46'41"(RT)	30.00	11.15	21.35	
	555	PT	2+67.61	325443.157	641264.435					12.98
	560	PC	2+77.91	325432.853	641264.457					
	F5					21°39'09"(RT)	24.00	4.59	9.07	
	565	PT	2+86.98	325423.994	641262.783					
	570	EP	2+87.43	325423.585	641262.610					
Central Island Alignment	600	BP	0+00.00	325778.017	641210.647					12.99
	A6					58°58'23"(RT)	40.00	22.62	41.17	
	605	PCC	0+41.17	325762.445	641246.813					12.90
	B6					62°03'16"(RT)	105.00	63.16	113.72	
	610	PCC	1+54.89	325654.833	641258.487					12.82
	C6					58°58'22"(RT)	40.00	22.62	41.17	
	615	PCC	1+96.06	325631.867	641226.501					12.29
	D6					58°58'23"(RT)	40.00	22.62	41.17	
	620	PCC	2+37.23	325647.439	641190.333					11.99
	E6					62°03'16"(RT)	105.00	63.16	113.72	
	625	PCC	3+50.95	325755.051	641178.659					12.76
	F6					58°58'22"(RT)	40.00	22.62	41.17	
	630	EP	3+92.12	325778.017	641210.647					12.99

FED. ROAD DIST. NO.	STATE	FED. AID PROJ. NO.	FISCAL YEAR	SHEET NO.	TOTAL SHEETS
HAWAII	HAW.	NH-019-2(076)	2026	36	106

NOTES:
1. See Staking Plan Sheets for Point Locations.
2. All Alignments, Points and Curves on Curb and Gutter are at Lip of Gutter. Barrier Curb Points are at Bottom Face of Curb.
3. Coordinates are Based on Benchmark and Points Shown on Overall Site Plan.

JESSICA M SAMURA
LICENSED PROFESSIONAL ENGINEER
NO. 16449-C
HAWAII, U.S.A.

LICENSE EXPIRES 4/30/28

THIS WORK WAS PREPARED BY ME OR UNDER MY SUPERVISION

STATE OF HAWAII
DEPARTMENT OF TRANSPORTATION
HIGHWAYS DIVISION

STAKING DATA SHEET

HILO BAYFRONT HIGHWAY
Intersection Improvements at Waianuenue Avenue
Federal Aid Project No. NH-019-2(076)

Scale: As Noted Date: Sep, 2026

SHEET No. 1 OF 2 SHEETS

36

ORIGINAL PLAN | SURVEY PLOTTED BY | DATE | NOTE BOOK | DRAWN BY | " | TRACED BY | " | DESIGNED BY | " | QUANTITIES BY | " | CHECKED BY | " | No.

LAST UPDATE: Jul 24, 2026 @ 08:54 am PLOT DATE: Sep 22, 2026 @ 04:31 pm
PATH: I:\FILENAME: C:\Users\mnishida\DOCUMENTS\ACCDocs\ACCONECT-AMERICO-HOTMAIL-Hilo Bayfront Roundabout\Project Files\890 DATA\05 SHEETS\36-37_Staking Data Sheet.dwg

	No.	Point	Station	Northing	Easting	Delta	Radius	Tangent	Length	Elevation
Splitter Island 1	700	BP	0+00.00	325847.696	641193.974					12.46
	705	PC	0+55.47	325801.945	641225.339					12.21
	A7					131°46'41"(RT)	3.00	6.70	6.90	
	710	PRC	0+62.37	325797.272	641222.485					12.31
	B7					15°45'57"(LT)	59.51	8.24	16.38	
	715	PRC	0+78.74	325797.096	641206.163					12.43
	C7					99°11'24"(RT)	1.00	1.17	1.73	
	720	PRC	0+80.48	325798.098	641205.002					12.44
	D7					15°07'03"(LT)	189.29	25.12	49.94	
	725	PRC	1+30.42	325845.735	641190.504					12.39
	E7					170°04'59"(RT)	2.00	23.05	5.94	
	730	EP	1+36.36	325847.696	641193.974					12.46
Splitter Island 2	800	BP	0+00.00	325656.755	641282.105					12.09
	A8					15°28'00"(LT)	146.00	19.83	39.41	
	805	PT	0+39.41	325625.065	641305.335					11.83
	810	PC	0+88.66	325589.623	641339.530					12.02
	B8					10°54'17"(RT)	261.00	24.91	49.67	
	815	PT	1+38.34	325550.819	641370.422					12.32
	820	PC	3+30.73	325389.593	641475.405					12.50
	C8					179°03'21"(RT)	1.50	182.07	4.69	
	825	PT	3+35.42	325387.936	641472.904					12.81
	830	PI	4+47.20	325480.595	641410.371					12.60
	835	PC	5+41.67	325558.896	641357.528					12.13
	D8					23°37'15"(LT)	280.00	58.55	115.43	
	840	PCC	6+57.10	325638.767	641275.323					12.18
	E8					84°30'32"(RT)	3.00	2.73	4.42	
	845	PRC	6+61.52	325642.657	641274.253					12.20
	F8					7°00'12"(LT)	124.50	7.62	15.22	
	850	PRC	6+76.74	325656.618	641280.286					12.13
	G8					131°37'17"(RT)	1.00	2.23	2.30	
	855	EP	6+79.04	325656.755	641282.105					12.09
Splitter Island 3	900	BP	0+00.00	325808.790	641101.503					10.76
	A9					6°38'28"(LT)	327.00	18.97	37.90	
	905	PCC	0+37.90	325778.639	641124.434					11.47
	B9					44°41'22"(LT)	47.00	19.32	36.66	
	910	PRC	0+74.56	325762.370	641156.252					12.11
	C9					107°35'19"(RT)	3.00	4.10	5.63	
	915	PRC	0+80.19	325758.241	641158.780					12.15
	D9					7°34'38"(LT)	124.50	8.24	16.46	
	920	PRC	0+96.66	325742.642	641153.550					11.92
	E9					125°37'35"(RT)	1.00	1.95	2.19	
	925	PRC	0+98.85	325742.258	641151.812					11.88
	F9					10°34'25"(LT)	201.00	18.60	37.09	
	930	PRC	1+35.94	325768.490	641125.660					11.56
	G9					24°01'40"(RT)	114.00	24.26	47.81	
	935	PCC	1+83.75	325805.793	641096.321					10.79
	H9					172°14'17"(RT)	3.00	44.22	9.02	
	940	EP	1+92.77	325808.790	641101.503					10.76

	No.	Point	Station	Northing	Easting	Delta	Radius	Tangent	Length	Elevation
Splitter Island 4	1000	BP	0+00.00	325679.570	641153.467					11.62
	A10					9°06'17"(LT)	124.50	9.91	19.78	
	1005	PRC	0+19.78	325660.901	641159.951					11.43
	B10					122°39'32"(RT)	1.00	1.83	2.14	
	1010	PRC	0+21.92	325659.511	641158.880					11.40
	C10					24°05'09"(LT)	66.50	14.19	27.96	
	1015	PRC	0+49.88	325658.017	641131.170					11.22
	D10					153°12'40"(RT)	1.50	6.30	4.01	
	1020	PRC	0+53.89	325660.581	641129.776					11.23
	E10					11°04'13"(LT)	141.00	13.66	27.24	
	1025	PRC	0+81.13	325680.621	641148.169					11.53
	F10					128°23'28"(RT)	3.00	6.20	6.72	
	1030	EP	0+87.86	325679.570	641153.467					11.62
Splitter Island 5	1100	BP	0+00.00	325634.228	641173.636					11.35
	A11					28°35'51"(RT)	54.00	13.76	26.95	
	1105	PCC	0+26.95	325613.109	641189.929					11.44
	B11					165°42'04"(RT)	1.00	7.97	2.89	
	1110	PT	0+29.84	325612.101	641188.219					11.42
	1115	PC	0+56.02	325632.830	641172.228					11.32
	C11					165°42'04"(RT)	1.00	7.97	2.89	
	1120	EP	0+58.92	325634.228	641173.636					11.35
Splitter Island 6	1200	BP	0+00.00	325610.852	641223.905					11.72
	A12					21°54'37"(LT)	41.00	7.94	15.68	
	1205	PCC	0+15.68	325595.345	641222.362					11.90
	B12					36°20'50"(LT)	111.00	36.44	70.42	
	1210	PT	0+86.09	325531.822	641249.915					12.01
	1215	PC	1+15.80	325509.618	641269.644					12.21
	C12					19°32'18"(RT)	160.00	27.55	54.56	
	1220	PCC	1+70.36	325463.498	641298.299					12.60
	D12					70°00'31"(RT)	3.00	2.10	3.67	
	1225	PT	1+74.02	325460.143	641297.529					12.68
	1230	PC	1+75.86	325458.915	641296.169					12.71
	E12					91°10'24"(RT)	1.00	1.02	1.59	
	1235	PT	1+77.45	325459.002	641294.743					12.72
	1240	PC	2+34.04	325501.778	641257.687					12.55
	F12					23°23'11"(RT)	190.00	39.32	77.55	
	1245	PT	3+11.59	325569.717	641221.415					11.92
	1250	PC	3+52.55	325609.006	641209.848					11.61
	G12					115°06'37"(RT)	3.00	4.72	6.03	
	1255	PRC	3+58.58	325612.819	641213.180					11.61
	H12					4°41'52"(LT)	59.50	2.44	4.88	
	1260	PCC	3+63.46	325612.279	641218.028					11.66
	J12					4°43'05"(LT)	60.23	2.48	4.96	
	1265	PRC	3+68.42	325612.137	641222.984					11.70
	K12					104°30'46"(RT)	1.00	1.29	1.82	
	1270	EP	3+70.24	325610.852	641223.905					11.72

FED. ROAD DIST. NO.	STATE	FED. AID PROJ. NO.	FISCAL YEAR	SHEET NO.	TOTAL SHEETS
HAWAII	HAW.	NH-019-2(076)	2026	37	106

NOTES:
1. See Staking Plan Sheets for Point Locations.
2. All Alignments, Points and Curves on Curb and Gutter are at Lip of Gutter. Barrier Curb Points are at Bottom Face of Curb.
3. Coordinates are Based on Benchmark and Points Shown on Overall Site Plan.

JESSICA M SAMURA
LICENSED PROFESSIONAL ENGINEER
NO. 16449-C
HAWAII, U.S.A.

LICENSE EXPIRES 4/30/28

THIS WORK WAS PREPARED BY ME OR UNDER MY SUPERVISION

STATE OF HAWAII
DEPARTMENT OF TRANSPORTATION
HIGHWAYS DIVISION

STAKING DATA SHEET

HILO BAYFRONT HIGHWAY
Intersection Improvements at Waianuenue Avenue
Federal Aid Project No. NH-019-2(076)

Scale: As Noted Date: Sep, 2026

SHEET No. 2 OF 2 SHEETS

37

ORIGINAL PLAN | NOTE BOOK
SURVEY PLOTTED BY ____ DATE ____
DRAWN BY ____ " ____
TRACED BY ____ " ____
DESIGNED BY ____ " ____
QUANTITIES BY ____ " ____
CHECKED BY ____ " ____

PATH/FILENAME: C:\Users\EMcCormick\AppData\Local\Temp\AcPublish_6076\EMcCormick_MEP@US\607@HHI-Hilo Bayfront Roundabout\Project Files\$90 CAD\$30 SHEETS\$2e-37_Staking Data Sheet.dwg
LAST UPDATED: Jul 24, 2026 @ 08:04 am PLOT DATE: Sep 22, 2026 @ 09:22 am

FED. ROAD DIST. NO.	STATE	FED. AID PROJ. NO.	FISCAL YEAR	SHEET NO.	TOTAL SHEETS
HAWAII	HAW.	NH-019-2(076)	2026	38	106

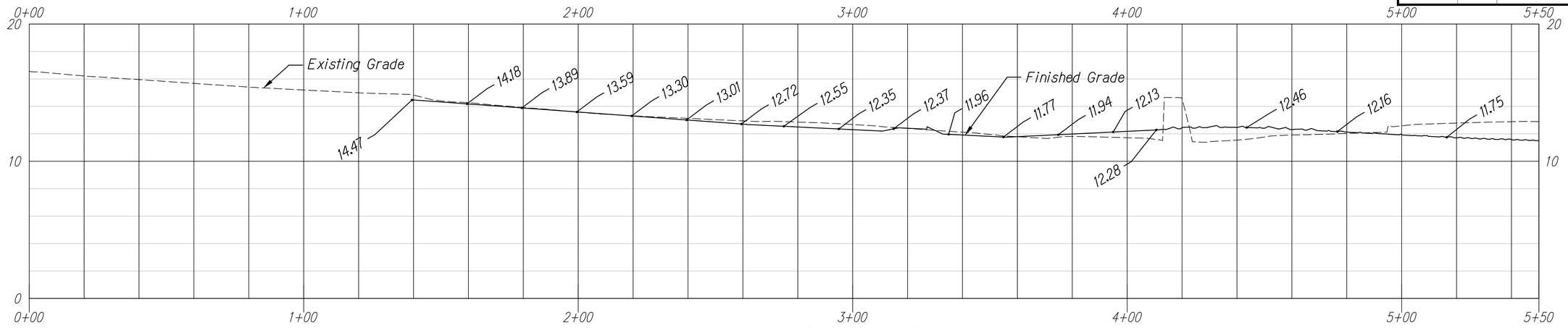

Makai Curbline Profile
Sta 0+00 to 5+50

Horizontal Scale: 1"=20'
Vertical Scale: 1"=4'

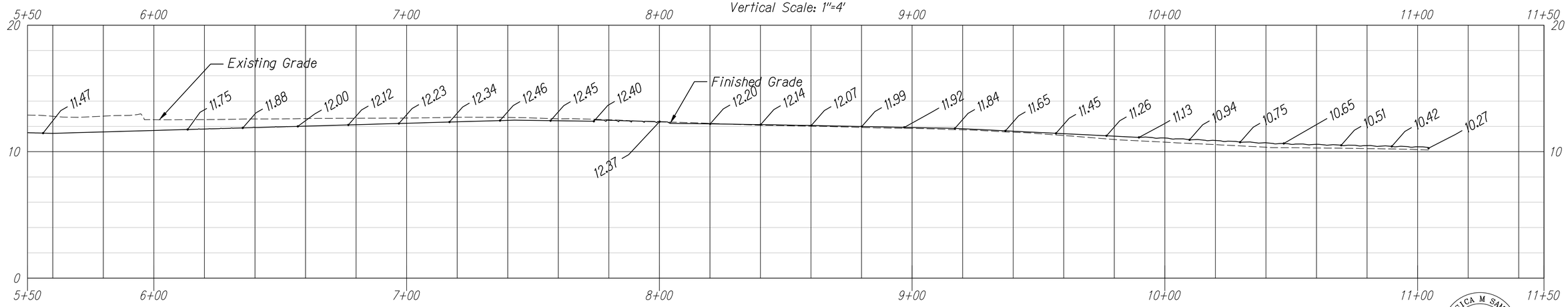

Makai Curbline Profile
Sta 5+50 to 11+04

Horizontal Scale: 1"=20'
Vertical Scale: 1"=4'

JESSICA M SAMURA
LICENSED PROFESSIONAL ENGINEER
NO. 16449-C
HAWAII, U.S.A.

LICENSE EXPIRES 4/30/28

THIS WORK WAS PREPARED BY ME OR UNDER MY SUPERVISION

20 10 0 20 40
Horizontal

4 3 2 1 0 4 8
Vertical
Graphic Scale in Feet

STATE OF HAWAII
DEPARTMENT OF TRANSPORTATION
HIGHWAYS DIVISION

CURBLINE PROFILE

HILO BAYFRONT HIGHWAY
Intersection Improvements at Waianuenue Avenue
Federal Aid Project No. NH-019-2(076)

Scale: As Noted Date: Sep, 2026

SHEET No. 1 OF 3 SHEETS

ORIGINAL PLAN
NOTE BOOK
SURVEY PLOTTED BY DATE
DRAWN BY " "
TRACED BY " "
DESIGNED BY " "
QUANTITIES BY " "
CHECKED BY " "
No.

LAST UPDATE: Aug 13, 2026 @ 10:46 pm PLOT DATE: Sep 22, 2026 @ 08:32 pm
PATH:\FILENAME: C:\User\EMC\Dropbox\HADOT\ACCDocs\HDOT\ACCOM\21-AMEP\103\76894-Hilo Bayfront Roundabout\Project Files\ESD CAD\ESD SHEETS\ESB-45_Curbline Profile.dwg

FED. ROAD DIST. NO.	STATE	FED. AID PROJ. NO.	FISCAL YEAR	SHEET NO.	TOTAL SHEETS
HAWAII	HAW.	NH-019-2(076)	2026	39	106

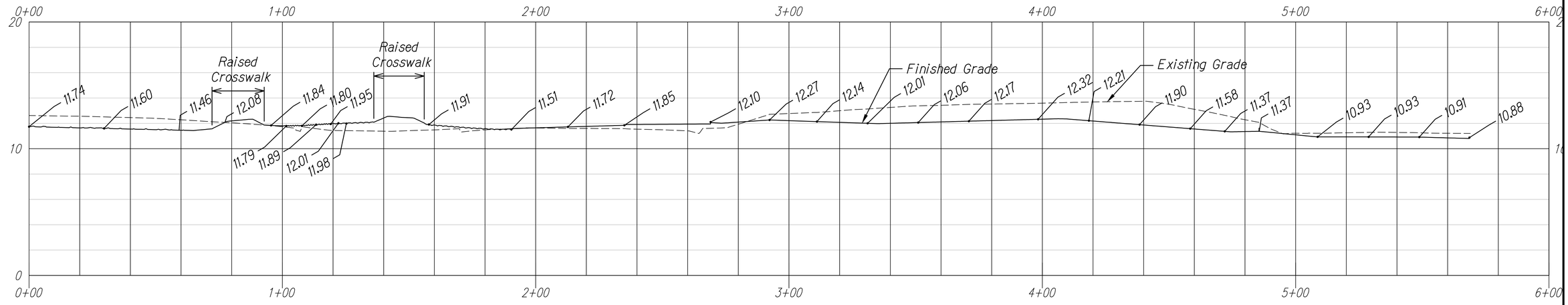

South Island Curbline Profile
Sta 0+00 to 5+80

Horizontal Scale: 1"=20'
Vertical Scale: 1"=4'

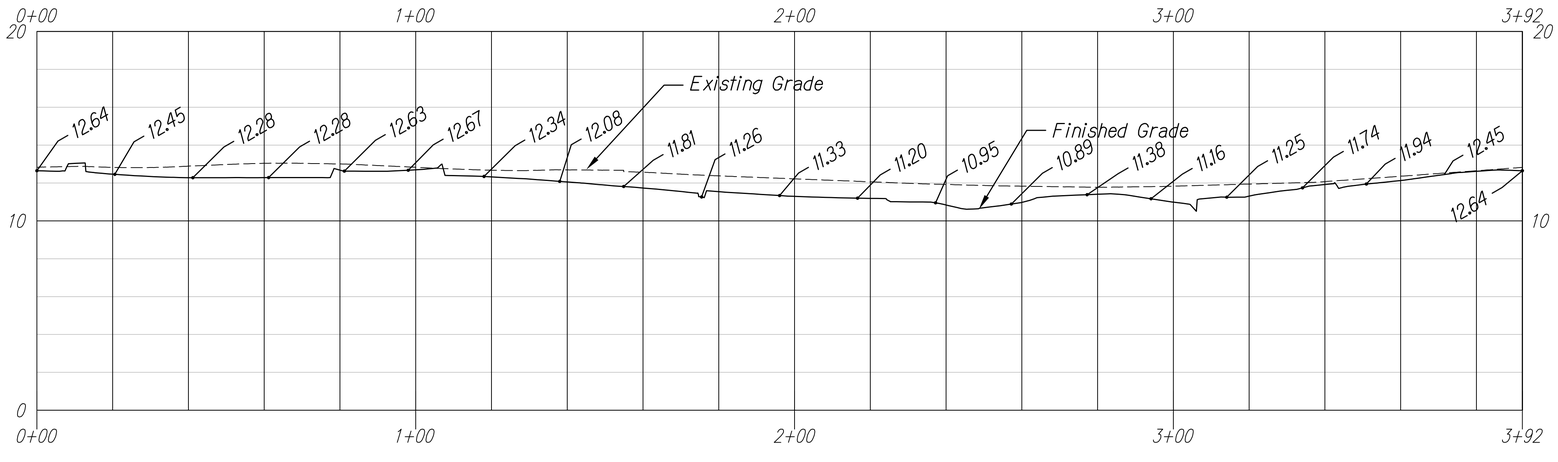

Central Island Curbline Profile
STA 0+00 to end

Horizontal Scale: 1"=20'
Vertical Scale: 1"=4'

20 10 0 20 40
Horizontal
4 3 2 1 0 4 8
Vertical
Graphic Scale in Feet

JESSICA M SAMURA
LICENSED PROFESSIONAL ENGINEER
NO. 16449-C
HAWAII, U.S.A.

LICENSE EXPIRES 4/30/28

THIS WORK WAS PREPARED BY ME OR UNDER MY SUPERVISION

STATE OF HAWAII
DEPARTMENT OF TRANSPORTATION
HIGHWAYS DIVISION

CURBLINE PROFILE

HILO BAYFRONT HIGHWAY
Intersection Improvements at Waianuenue Avenue
Federal Aid Project No. NH-019-2(076)

Scale: As Noted Date: Sep, 2026

SHEET No. 2 OF 3 SHEETS

ORIGINAL PLAN
NOTE BOOK
SURVEY PLOTTED BY DATE
DRAWN BY " "
TRACED BY " "
DESIGNED BY " "
QUANTITIES BY " "
CHECKED BY " "

LAST UPDATE: Aug 13, 2026 @ 10:46 pm PLOT DATE: Sep 22, 2026 @ 08:22 pm
PATH:\FILENAME: C:\User\EMC\Corridor\HAWDOT\ACCDocs\EAECOM\EAT-AMERICS\16078894-Hilo Bayfront Roundabout\Project Files\ESD CADD\ESD SHEET\ESD-40_Curbline Profile.dwg

FED. ROAD DIST. NO.	STATE	FED. AID PROJ. NO.	FISCAL YEAR	SHEET NO.	TOTAL SHEETS
HAWAII	HAW.	NH-019-2(076)	2026	40	106

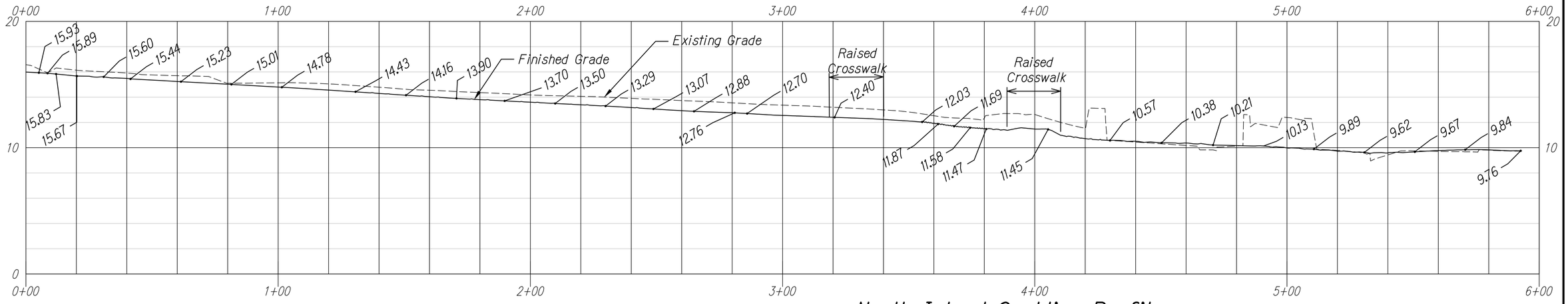

North Island Curbline Profile
Sta 0+00 to 5+93

Horizontal Scale: 1"=20'
Vertical Scale: 1"=4'

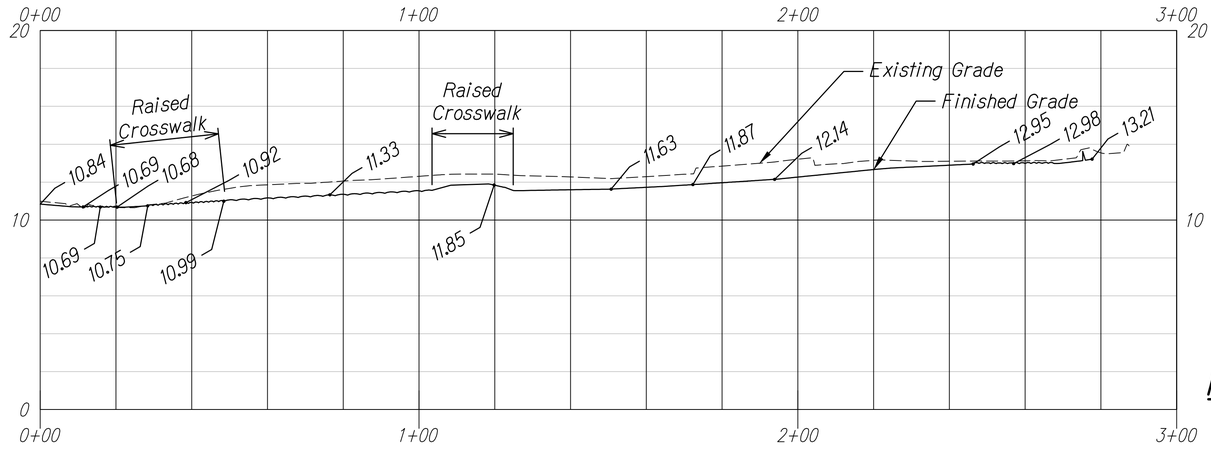

Kamehameha Ave South Curbline Profile
Sta 0+00 to 2+84

Horizontal Scale: 1"=20'
Vertical Scale: 1"=4'

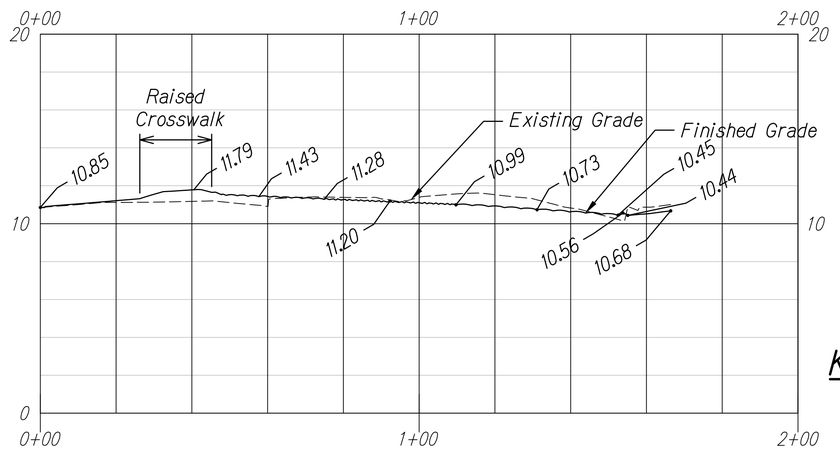

Kamehameha Ave North Curbline Profile
Sta 0+00 to 1+66

Horizontal Scale: 1"=20'
Vertical Scale: 1"=4'

20 10 0 20 40
Horizontal

4 3 2 1 0 4 8
Vertical
Graphic Scale in Feet

JESSICA M SAMURA
LICENSED PROFESSIONAL ENGINEER
NO. 16449-C
HAWAII, U.S.A.

LICENSE EXPIRES 4/30/28

THIS WORK WAS PREPARED BY ME OR UNDER MY SUPERVISION

STATE OF HAWAII
DEPARTMENT OF TRANSPORTATION
HIGHWAYS DIVISION

CURBLINE PROFILE

HILO BAYFRONT HIGHWAY
Intersection Improvements at Waianuenue Avenue
Federal Aid Project No. NH-019-2(076)

Scale: As Noted Date: Sep, 2026

SHEET No. 3 OF 3 SHEETS

ORIGINAL PLAN
NOTE BOOK
SURVEY PLOTTED BY DATE
DRAWN BY "
TRACED BY "
DESIGNED BY "
QUANTITIES BY "
CHECKED BY "
No.

LAST UPDATE: Aug 13, 2026 @ 10:46 pm PLOT DATE: Sep 22, 2026 @ 08:22 pm
PATH:FILENAME: C:\Users\BAGOrmin\AppData\Local\Temp\AcPublish_6472\Curbline Profile.dwg

FED. ROAD DIST. NO.	STATE	FED. AID PROJ. NO.	FISCAL YEAR	SHEET NO.	TOTAL SHEETS
HAWAII	HAW.	NH-019-2(076)	2026	41	106

Sta. 1+41.18 NB BL
FG=14.84±
Match Exist.

Sta. 1+62.62 NB BL
FG=14.55
End Sidewalk Transition

Sta. 3+07.84 NB BL
FG=12.64
Begin Sidewalk Transition

Sta. 3+17.84 NB BL
FG=12.55
End Sidewalk Transition

Adjust SIC MH To Finish Grade

Adjust WM To Finish Grade

Adjust WM To Finish Grade

Adjust SMH To Finish Grade

Limit of Grading

Basin 1 Data:
Required Volume = 660 CF
Available Volume = 690 CF
Side Slope = 2H:1V
Pooling Depth = 3 Feet
Freeboard = 1 Feet
Bottom of Basin Elev. = 8.50

TMK: 2-3-04:07
ADDRESS: 10 KAMEHAMEHA AVENUE
OWNER: GENERAL CONTRACTOR LLC

TMK: 2-3-04:02
ADDRESS: 9 SHIPMAN STREET
OWNER: F KOEHNEN LTD,
G E K MAMONE & SONS LLC A/S ON FEE

TMK: 2-3-04:16
ADDRESS: 9 SHIPMAN STREET
OWNER: F KOEHNEN LTD,
G E K MAMONE & SONS LLC A/S ON FEE

TMK: 2-3-03:10
ADDRESS: 90 KAMEHAMEHA AVENUE
OWNER: HILO BRUG BUILD CO CORP

TMK: 2-3-03:11
ADDRESS: 100 KAMEHAMEHA AVENUE
OWNER RED SEA ENTERPRISES LLC

Match Line See Sheet 42

Legend

—12— Proposed Elevation Contours	11.62 Existing Spot Grade
---12--- Existing Major Elevation Contours	11.62 Finish Spot Grade
---12--- Existing Minor Elevation Contours	Type B Catch Basin, per HDOT H-01B
	Type C Catch Basin, per HDOT H-01C
----- Limits of Grading	Type D Catch Basin, per HDOT H-01D
—————— Right-of-Way (ROW)	DMH Proposed Manhole
Exist Water Meter	FH Proposed Fire Hydrant
Exist Water Valve	

Grading Plan - 1

Scale: 1"=20'

NOTES:
1. Refer to Enlarged Grading Plans on Sheet 44-46 for the grading of ramps, crosswalks, and driveway.
2. See Staking Plan and Data Sheets for tie-down information.

TRUE NORTH
Scale 1 In. = 20 Ft

0 20 40 60
Scale: 1" = 20' Feet

JESSICA M SAMURA
LICENSED PROFESSIONAL ENGINEER
NO. 16449-C
HAWAII, U.S.A.

LICENSE EXPIRES 4/30/28

THIS WORK WAS PREPARED BY ME OR UNDER MY SUPERVISION

STATE OF HAWAII
DEPARTMENT OF TRANSPORTATION
HIGHWAYS DIVISION

GRADING PLAN

HILO BAYFRONT HIGHWAY
Intersection Improvements at Waianuenue Avenue
Federal Aid Project No. NH-019-2(076)

Scale: As Noted Date: Sep, 2026

SHEET No. 1 OF 2 SHEETS

ORIGINAL PLAN | SURVEY PLOTTED BY | DRAWN BY | TRACED BY | DESIGN BY | QUANTITIES BY | CHECKED BY | DATE
NOTE BOOK | No.

LAST UPDATED: Sep 15, 2026 @ 10:08 am PLOT DATE: Sep 22, 2026 @ 04:33 pm
PATH:\FILENAME: C:\Users\MCorrea\AECOM\AECOM - AMERICAS\07678844-Hilo Bayfront Roundabout\Project Files\890 CADD\0 SHEETS\44-42 Grading Plan.dwg

FED. ROAD DIST. NO.	STATE	FED. AID PROJ. NO.	FISCAL YEAR	SHEET NO.	TOTAL SHEETS
HAWAII	HAW.	NH-019-2(076)	2026	42	106

Basin 2 Data:
Required Volume = 860 CF
Available Volume = 897 CF
Side Slope = 2H:1V
Pooling Depth = 3 Feet
Freeboard = 1 Feet
Bottom of Basin Elev. = 7.41

TMK: 2-3-02:11
OWNER: STATE OF HAWAII

TRUE NORTH
Scale: 1in. = 20 ft

Top=11.02
Top=12.21
Top=11.63
Top=11.69

Adjust Storm Frame and Cover to Grade

Limit of Grading

Match Line See Sheet 41

TMK: 2-3-03:03
OWNER: STATE OF HAWAII

TMK: 2-3-02:22
ADDRESS: KAMEHAMEHA AVENUE
OWNER: STATE OF HAWAII

2-3-03:14
KAMEHAMEHA AVENUE
HV PROPERTIES LLC

2-3-03:15
KAMEHAMEHA AVENUE
SIGMUND LLOYD
FAITH NALAM

2-3-03:05
KAMEHAMEHA AVENUE
TSUNAMI MUSEUM INC

Legend

—12—	Proposed Elevation Contours
---12---	Existing Major Elevation Contours
---12---	Existing Minor Elevation Contours
– – – – –	Limits of Grading
———————	Right-of-Way (ROW)
⊠	Exist Water Meter
•	Exist Water Valve
11.62	Existing Spot Grade
11.62	Finish Spot Grade
	Type B Catch Basin, per HDOT H-01B
	Type C Catch Basin, per HDOT H-01C
	Type D Catch Basin, per HDOT H-01D
DMH	Proposed Manhole
FH	Proposed Fire Hydrant

Grading Plan - 2

Scale: 1"=20'

NOTES:
1. Refer to Enlarged Grading Plans on Sheet 44-46 for the grading of ramps, crosswalks, and driveway.
2. See Staking Plan and Data Sheets for tie-down information.

0 20 40 60
Scale: 1" = 20' Feet

JESSICA M SAMURA
LICENSED PROFESSIONAL ENGINEER
NO. 16449-C
HAWAII, U.S.A.

LICENSE EXPIRES 4/30/28

THIS WORK WAS PREPARED BY ME OR UNDER MY SUPERVISION

STATE OF HAWAII
DEPARTMENT OF TRANSPORTATION
HIGHWAYS DIVISION

GRADING PLAN

HILO BAYFRONT HIGHWAY
Intersection Improvements at Waianuenue Avenue
Federal Aid Project No. NH-019-2(076)

Scale: As Noted Date: Sep, 2026

SHEET No. 2 OF 2 SHEETS

ORIGINAL PLAN	SURVEY PLOTTED BY	DATE
NOTE BOOK	DRAWN BY	"
	TRACED BY	"
	DESIGNED BY	"
	QUANTITIES BY	"
No.	CHECKED BY	"

LAST UPDATED: Sep 15, 2026 @ 10:08 am
PLOT DATE: Sep 22, 2026 @ 04:33 pm
PATH/FILENAME: C:\Users\BMcGinnis\AppData\Local\Temp\AcPublish_6472\Project Files\E90 CA2629 SHEET 2 of 42-Grading Plan.dwg

FED. ROAD DIST. NO.	STATE	FED. AID PROJ. NO.	FISCAL YEAR	SHEET NO.	TOTAL SHEETS
HAWAII	HAW.	NH-019-2(076)	2026	43	106

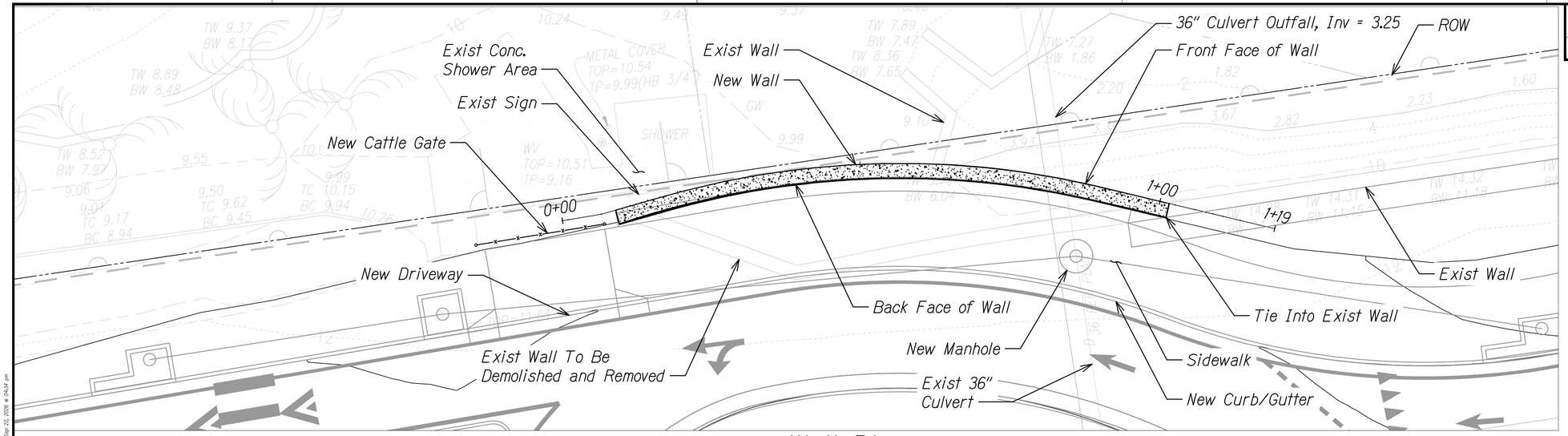

Wall Plan

Scale: 1"=10'

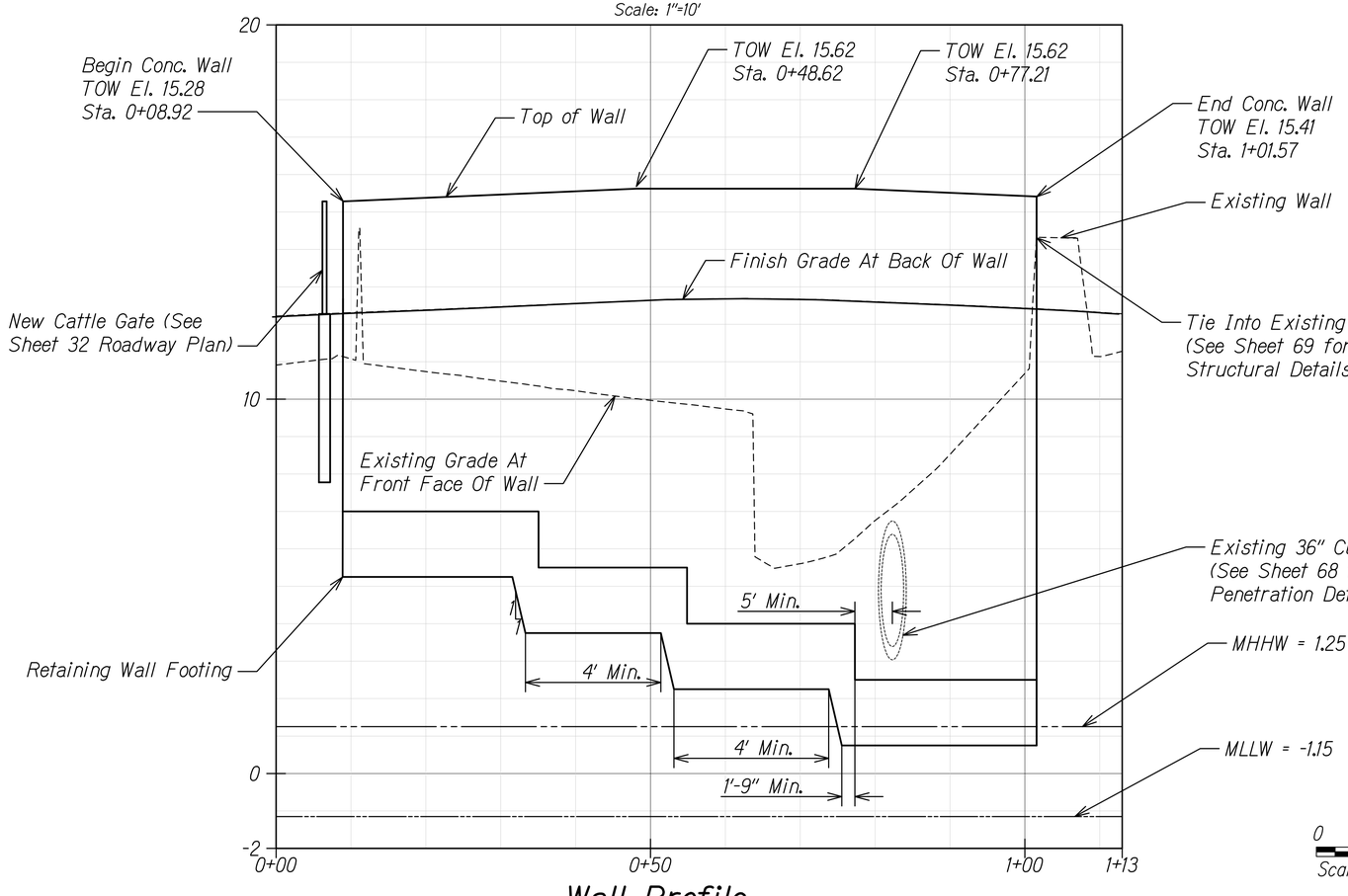

Wall Profile

Horizontal Scale: 1"=10'
Vertical Scale: 1"=2'

NOTES:
1. See Sheet 70 Retaining Wall Schedule And Typical Step Footing for Details.

0 2 4 6
Scale: 1" = 2' Feet

0 10 20 30
Scale: 1" = 10' Feet

JESSICA M SAMURA
LICENSED PROFESSIONAL ENGINEER
NO. 16449-C
HAWAII, U.S.A.

LICENSE EXPIRES 4/30/28

THIS WORK WAS PREPARED BY ME OR UNDER MY SUPERVISION

STATE OF HAWAII
DEPARTMENT OF TRANSPORTATION
HIGHWAYS DIVISION

WALL PROFILE

HILO BAYFRONT HIGHWAY
Intersection Improvements at Waianuenue Avenue
Federal Aid Project No. NH-019-2(076)

Scale: As Noted Date: Sep, 2026

SHEET No. / OF / SHEETS

ORIGINAL PLAN
NOTE BOOK
SURVEY PLOTTED BY DATE
DRAWN BY "
TRACED BY "
DESIGNED BY "
QUANTITIES BY "
CHECKED BY "
No.

LAST UPDATE: Aug 20, 2026 @ 09:49 am PLOT DATE: Sep 22, 2026 @ 04:34 pm
PATH/FILENAME: C:\Users\MCorrea\AppData\Local\Temp\AcPublish_6276\Hilo Bayfront Roundabout\Project Files\ENV CAD\20 SHEETS\40_Wall Profile.dwg

FED. ROAD DIST. NO.	STATE	FED. AID PROJ. NO.	FISCAL YEAR	SHEET NO.	TOTAL SHEETS
HAWAII	HAW.	NH-019-2(076)	2026	44	106

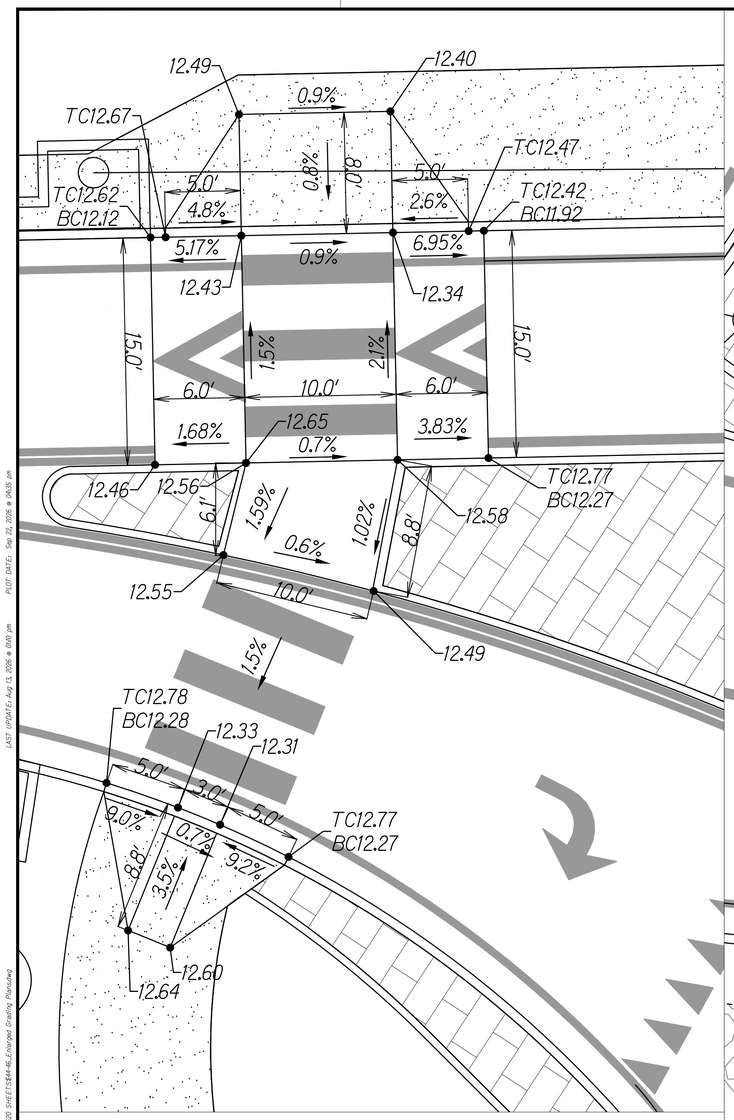

Bayfront Highway (North)

Scale: 1"=5'

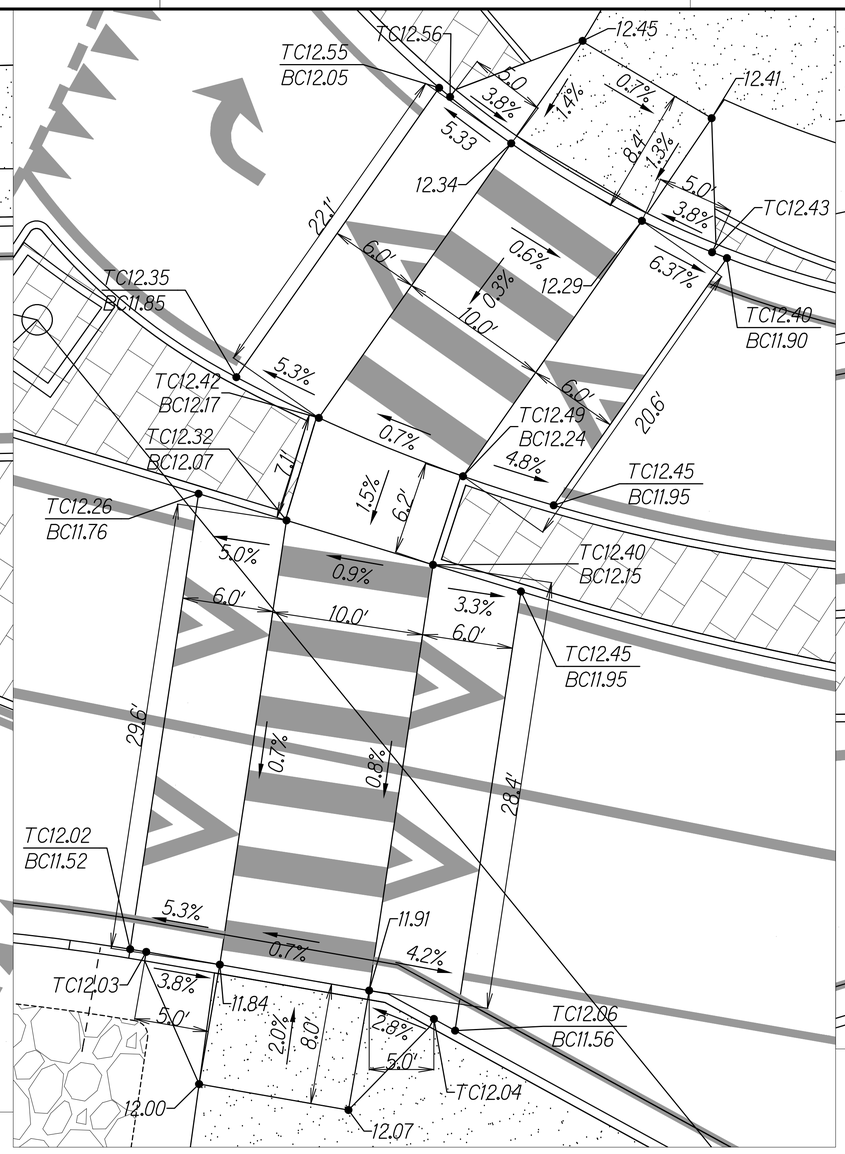

Kamehameha Avenue (South)

Scale: 1"=5'

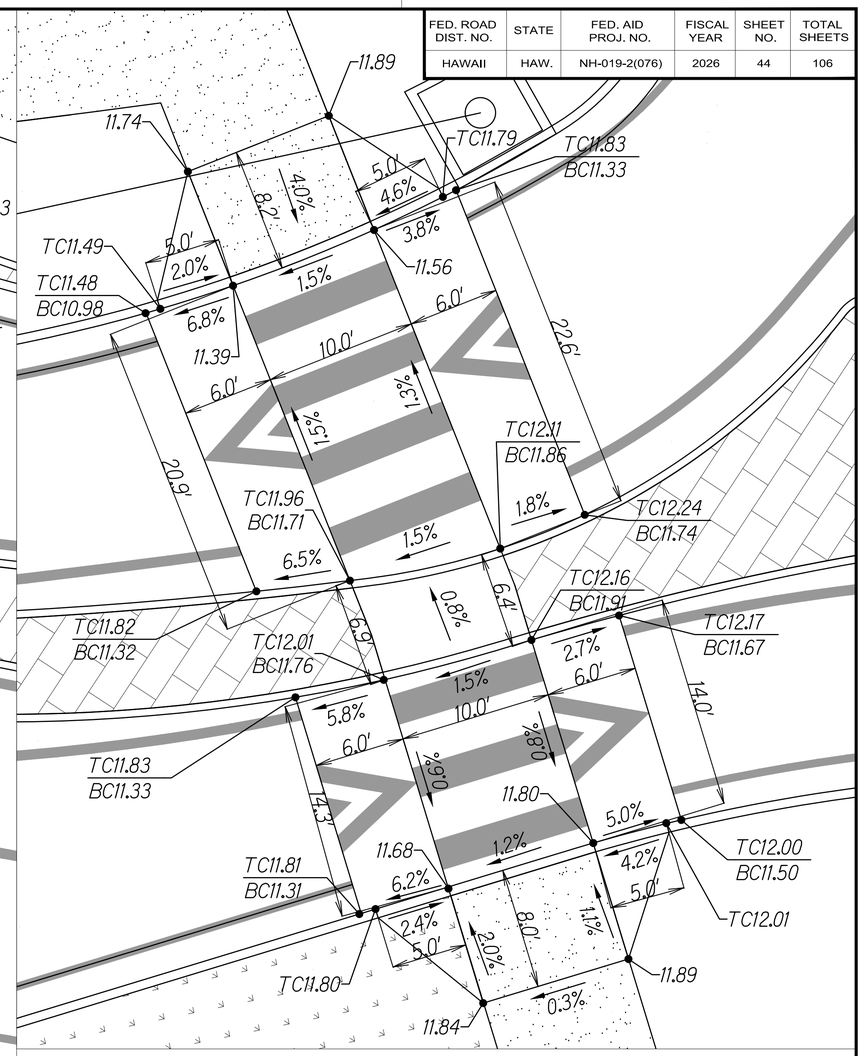

Kamehameha Avenue (North)

Scale: 1"=5'

JESSICA M SAMURA
LICENSED PROFESSIONAL ENGINEER
NO. 16449-C
HAWAII, U.S.A.

LICENSE EXPIRES 4/30/28

THIS WORK WAS PREPARED BY ME OR UNDER MY SUPERVISION

STATE OF HAWAII
DEPARTMENT OF TRANSPORTATION
HIGHWAYS DIVISION

ENLARGED GRADING PLAN

HILO BAYFRONT HIGHWAY
Intersection Improvements at Waianuenue Avenue
Federal Aid Project No. NH-019-2(076)

Scale: As Noted Date: Sep, 2026

SHEET No. 1 OF 3 SHEETS

ORIGINAL PLAN
NOTE BOOK
SURVEY PLOTTED BY DATE
DRAWN BY "
TRACED BY "
DESIGNED BY "
QUANTITIES BY "
CHECKED BY "

PLOT DATE: Sep 22, 2026 @ 0h53 jm
LAST UPDATE: Aug 13, 2026 @ 0h00 jm
PATH/FILENAME: C:\Users\MaCromia\AppData\Local\Temp\AcPublish_6276\[MACROMIA-HNL Bayfront Roundabout] Project Files\800 CADD\3 SHEETS\844-46_Enlarged Grading Plan.dwg

FED. ROAD DIST. NO.	STATE	FED. AID PROJ. NO.	FISCAL YEAR	SHEET NO.	TOTAL SHEETS
HAWAII	HAW.	NH-019-2(076)	2026	45	106

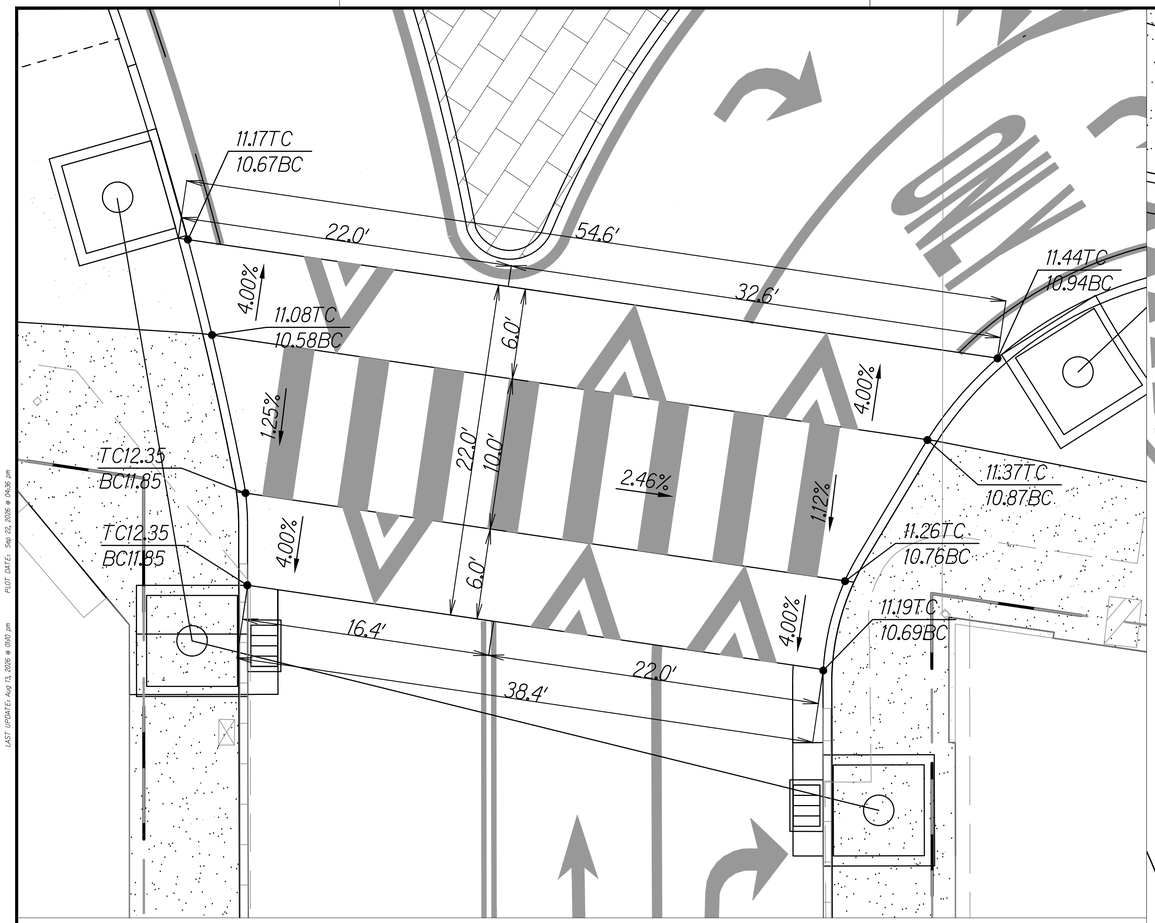

Waianuenue Avenue

Scale: 1"=5'

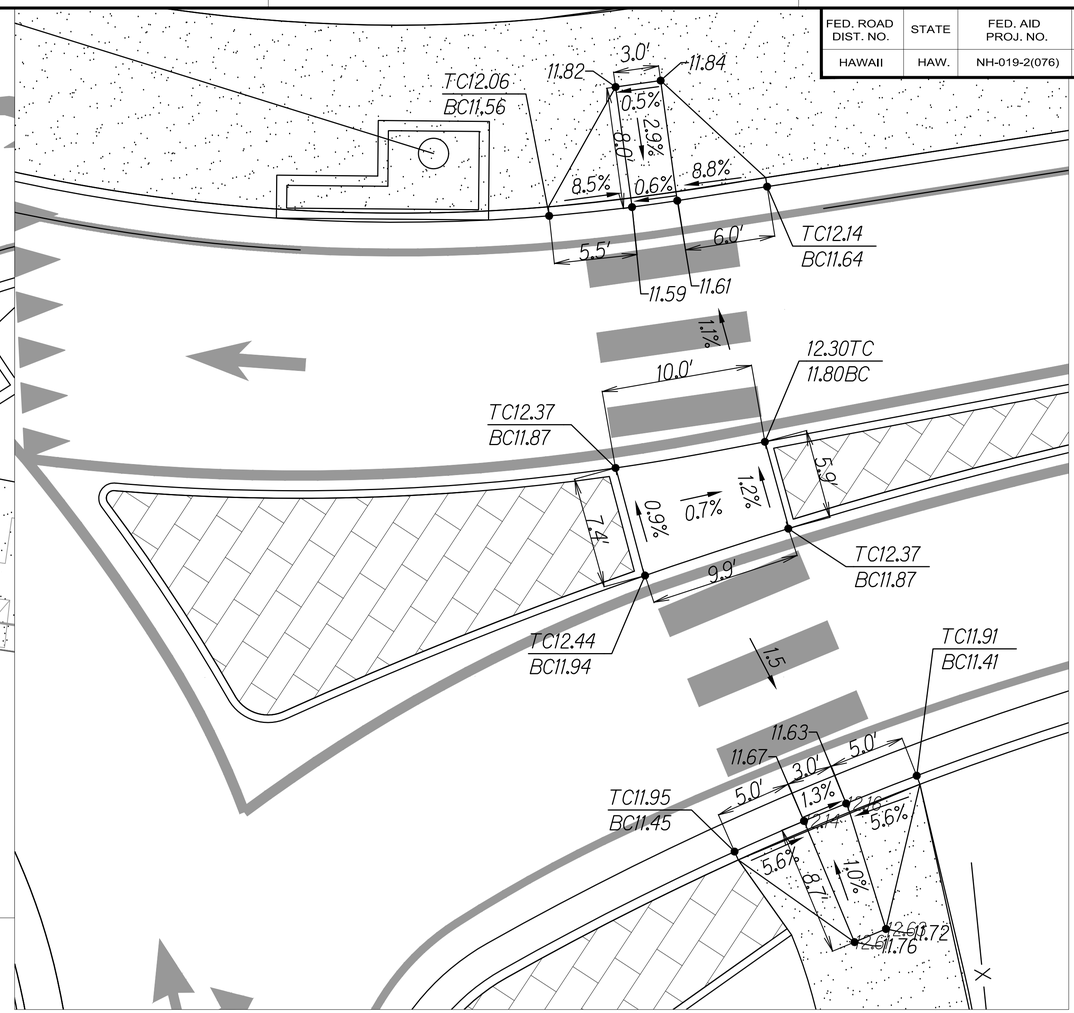

Bayfront Highway (South)

Scale: 1"=5'

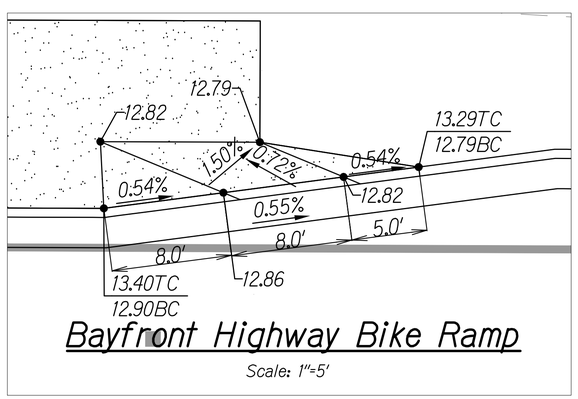

Bayfront Highway Bike Ramp

Scale: 1"=5'

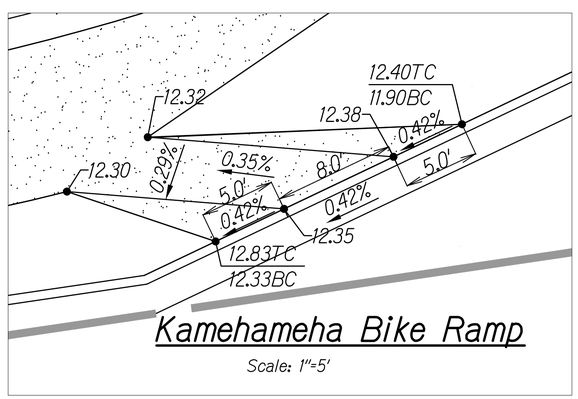

Kamehameha Bike Ramp

Scale: 1"=5'

JESSICA M SAMORA
LICENSED PROFESSIONAL ENGINEER
NO. 16449-C
HAWAII, U.S.A.

LICENSE EXPIRES 4/30/28

THIS WORK WAS PREPARED BY ME OR UNDER MY SUPERVISION

STATE OF HAWAII
DEPARTMENT OF TRANSPORTATION
HIGHWAYS DIVISION

ENLARGED GRADING PLAN

HILO BAYFRONT HIGHWAY
Intersection Improvements at Waianuenue Avenue
Federal Aid Project No. NH-019-2(076)

Scale: As Noted Date: Sep, 2026

SHEET No. 2 OF 3 SHEETS

ORIGINAL PLAN
NOTE BOOK
SURVEY PLOTTED BY DATE
DRAWN BY " "
TRACED BY " "
DESIGNED BY " "
QUANTITIES BY " "
CHECKED BY " "

PATH/FILENAME: C:\Users\Mcdonnell\AECOM\ACCDocs\EAECOM21-AMER\GH-6078944-Hilo Bayfront Roundabout\Project Files\B90 CAD\B20 SHEETS\844-46_Enlarged Grading Plans.dwg
LAST UPDATE: Aug 13, 2026 @ 09:07 pm
PLOT DATE: Sep 22, 2026 @ 04:36 pm

FED. ROAD DIST. NO.	STATE	FED. AID PROJ. NO.	FISCAL YEAR	SHEET NO.	TOTAL SHEETS
HAWAII	HAW.	NH-019-2(076)	2026	46	106

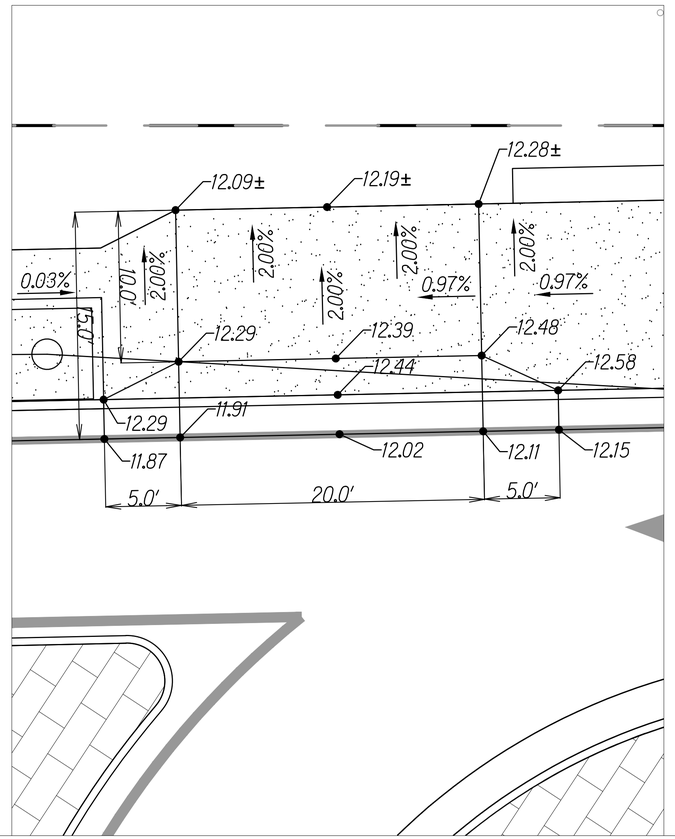

Bayfront Highway (North) Driveway

Scale: 1"=5'

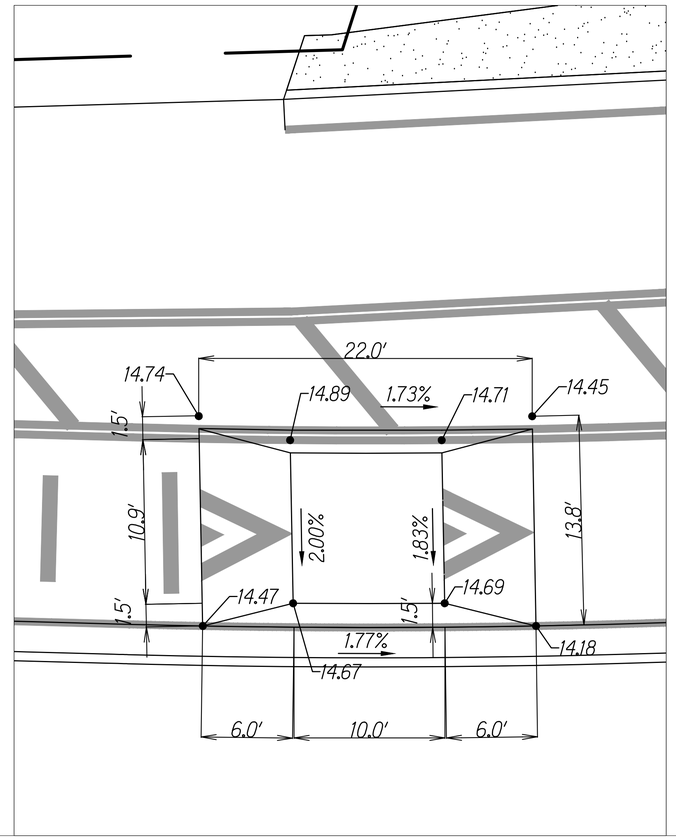

Bayfront Highway (North) Speed Table

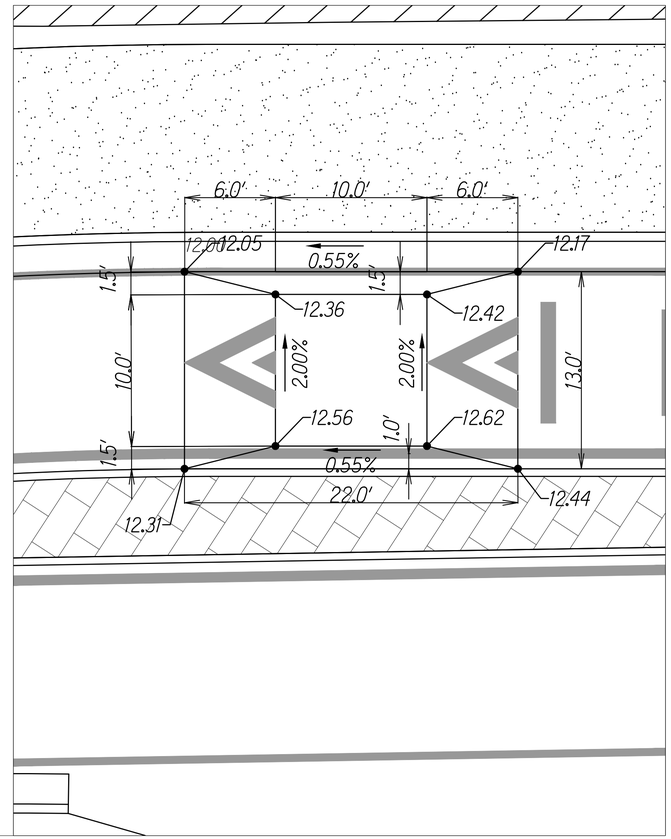

Bayfront Highway (South) Speed Table

JESSICA M SAMURA
LICENSED PROFESSIONAL ENGINEER
NO. 16449-C
HAWAII, U.S.A.

LICENSE EXPIRES 4/30/28

THIS WORK WAS PREPARED BY ME OR UNDER MY SUPERVISION

STATE OF HAWAII
DEPARTMENT OF TRANSPORTATION
HIGHWAYS DIVISION

ENLARGED GRADING PLAN

HILO BAYFRONT HIGHWAY
Intersection Improvements at Waianuenue Avenue
Federal Aid Project No. NH-019-2(076)

Scale: As Noted Date: Sep, 2026

SHEET No. 3 OF 3 SHEETS

ORIGINAL PLAN
NOTE BOOK
SURVEY PLOTTED BY DATE
DRAWN BY " "
TRACED BY " "
DESIGNED BY " "
QUANTITIES BY " "
CHECKED BY " "
No.

LAST UPDATE: Aug 13, 2026 @ 09:10 jim PLOT DATE: Sep 22, 2026 @ 04:27 jim

PATH/FILENAME: C:\Users\kMcCormick\KEDC\KACCDocs\KECOMEC1-AMERUGH-607\6944-Hilo Bayfront Roundabout\Project Files\890 CADD\5 SHEETS\44-46_Enlarged Grading Plans.dwg

FED. ROAD DIST. NO.	STATE	FED. AID PROJ. NO.	FISCAL YEAR	SHEET NO.	TOTAL SHEETS
HAWAII	HAW.	NH-019-2(076)	2026	47	106

Existing Outfall Culvert To Hilo Bay To Remain In Place
Existing Manhole
Type A Storm Drain Manhole per HDOT H-03 N:325925.582 E:641103.279
Type C Catch Basin N:325846.250 E:641168.111
Type C Storm Drain Manhole per HDOT H-03 With 2.5' Sump for Sedimentation N:325925.582 E:641103.279
Infiltration Basin Inlet N:325845.380 E:641154.516
Type B Catch Basin N:325857.152 E:641210.949
Type D Catch Basin N:325816.483 E:641238.005
Type A Drain Manhole per HDOT H-03 N:325727.276 E:641292.758
Existing Outfall Culvert To Hilo Bay To Remain In Place
Hilo Bay
TRUE NORTH Scale: 1 In. = 20 Ft
D24 Drainline DL-F
D24 Drainline DL-E
Honoka'a
Hawaii Belt Road
Rip Rap
Infiltration Basin
D24 Drainline DL-A
To Hilo
Match Line See Sheet 48
D18 Drainline DL-A1
Type A Drain Manhole per HDOT H-03 N:325664.778 E:641197.294
Type 1211214P Grated Drop Inlet per HDOT H-12 Outlet Structure N:325464.799 E:641386.627
Existing 8" Waterline
Existing W8 Waterline
Electrical Line
D24 Drainline DL-D
W6 Waterline WL-A
Water Valve N:325727.450 E:641117.832
D24 Drainline DL-C
Type B Catch Basin N:325903.276 E:641076.990
Type D Catch Basin N:325789.902 E:641154.483
New Fire Hydrant Assembly per DWS Std Det FH3 N:325735.966 E:641134.163
D24 Drainline DL-G
W8 Waterline WL-B 4-8" $\frac{1}{4}$ Bends 2-8" Thrust Blocks w/ Straps per DWS Std Det B8
Type B Catch Basin N:325837.712 E:641104.821
Self-Mitigating Area
Remove Old Tee, 2 - 8" Transition Couplings 1 - *8" DI Nipple Cut To Fit
Type D Catch Basin N:325684.344 E:641122.413
Type D Catch Basin N:325625.027 E:641147.655
Type D Catch Basin N:325620.170 E:641116.220
Type D Catch Basin N:325664.197 E:641100.710
Existing W6 Waterline
Cut and Plug, Remove, and Salvage Exist FH Assembly
Existing W8 Waterline
Existing S10 Sewer Line
D24 Drainline DL-H
Wailuku Drive
Shipman Street
Waianuenue Avenue

Legend

Existing Drain Line	Type B Catch Basin, per HDOT H-01B
Proposed Drain Line	Type C Catch Basin, per HDOT H-01C
Existing Water Line	Type D Catch Basin, per HDOT H-01D
Proposed Water Line	Proposed SDMH Manhole
Existing Sewer Line	Existing Light Pole
Existing Electrical Line	85W LED Street Light, See Electrical Plans
Proposed Electrical Line	100W LED Street Light, See Electrical Plans
	Proposed Fire Hydrant

Utility Plan
Scale: 1"=20'

NOTES:
1. Coordinates are based on benchmark and control points shown on Overall Site Plan.
2. Coordinates shown are taken at the center point of the manhole openings for all manholes and catch basins.
3. Utility profiles are shown on Sheets 49 and 50.

0 20 40 60
Scale: 1" = 20' Feet

JESSICA M SAMURA LICENSED PROFESSIONAL ENGINEER NO. 16449-C HAWAII, U.S.A.
LICENSE EXPIRES 4/30/28
THIS WORK WAS PREPARED BY ME OR UNDER MY SUPERVISION

STATE OF HAWAII
DEPARTMENT OF TRANSPORTATION
HIGHWAYS DIVISION

UTILITY PLAN

HILO BAYFRONT HIGHWAY
Intersection Improvements at Waianuenue Avenue
Federal Aid Project No. NH-019-2(076)

Scale: As Noted Date: Sep, 2026

SHEET No. 1 OF 2 SHEETS

ORIGINAL PLAN | NOTE BOOK | SURVEY PLOTTED BY | DRAWN BY | TRACED BY | DESIGNED BY | QUANTITIES BY | CHECKED BY | DATE

LAST UPDATED: Sep 10, 2026 @ 0h53 pm PLOT DATE: Sep 22, 2026 @ 0h38 pm
PATH:F:\ENAWS\ C:\Users\BMcGrorty\AppData\Local\Temp\AcPublish_15076\[Hilo Bayfront Roundabout]Project Files\ENV DATA\SHEET DATA\SHEET 04 - Utility Plans.dwg

FED. ROAD DIST. NO.	STATE	FED. AID PROJ. NO.	FISCAL YEAR	SHEET NO.	TOTAL SHEETS
HAWAII	HAW.	NH-019-2(076)	2026	48	106

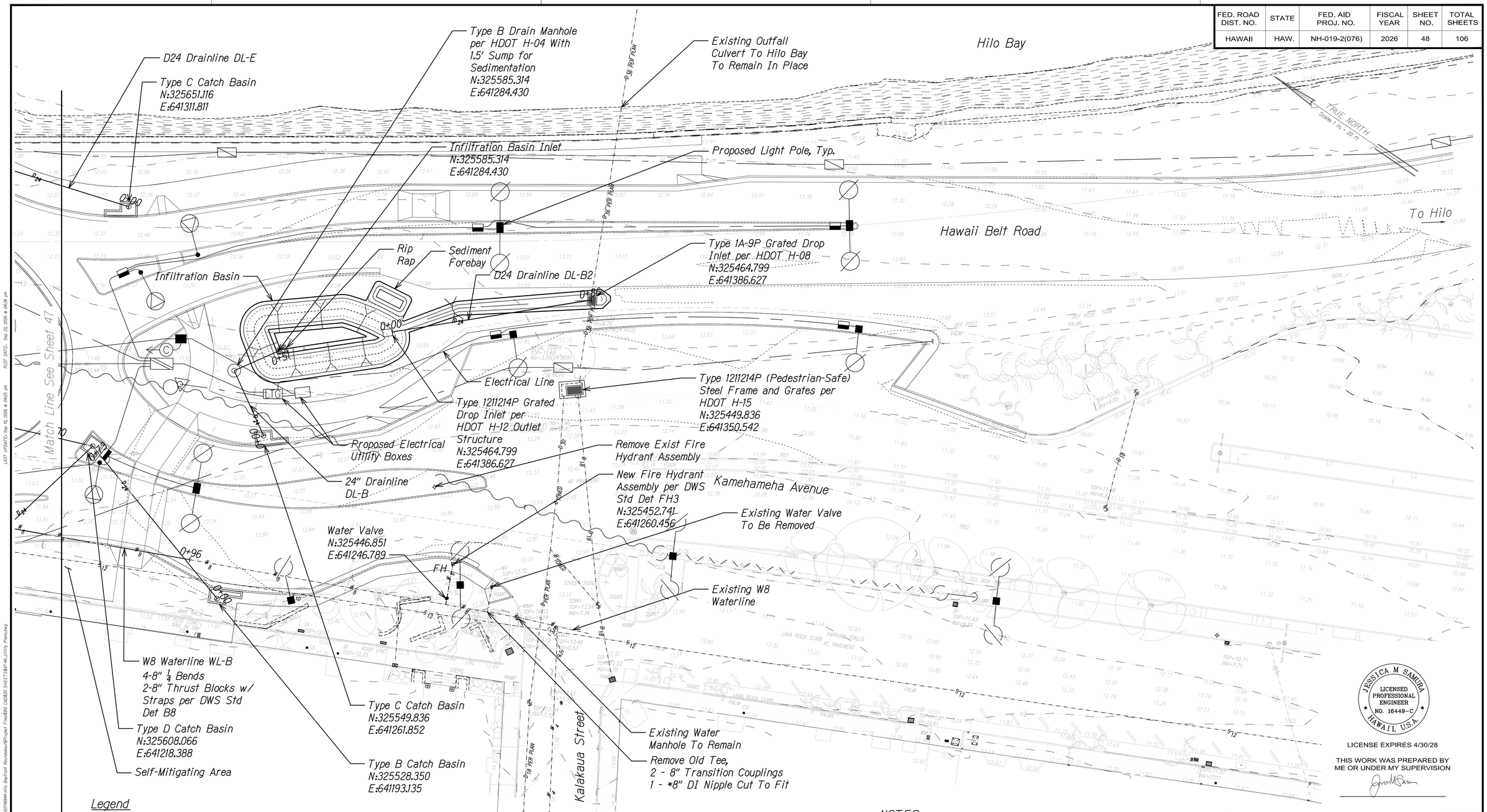

Legend

D_X	Existing Drain Line
D_X	Proposed Drain Line
W_X	Existing Water Line
W_X	Proposed Water Line
S_X	Existing Sewer Line
	Existing Electrical Line
	Proposed Electrical Line
	Type B Catch Basin, per HDOT H-01B
	Type C Catch Basin, per HDOT H-01C
	Type D Catch Basin, per HDOT H-01D
DMH	Proposed SDMH Manhole
FH	Proposed Fire Hydrant
	Existing Light Pole
	85W LED Street Light, See Electrical Plans
	100W LED Street Light, See Electrical Plans

Utility Plan

Scale: 1"=20'

NOTES:

1. Coordinates are based on benchmark and control points shown on Overall Site Plan.
2. Coordinates shown are taken at the center point of the manhole openings for all manholes and catch basins.
3. Utility profiles are shown on Sheets 49 and 50.

0 20 40 60
Scale: 1" = 20' Feet

JESSICA M SAMURA
LICENSED PROFESSIONAL ENGINEER
NO. 16449-C
HAWAII, U.S.A.

LICENSE EXPIRES 4/30/28

THIS WORK WAS PREPARED BY ME OR UNDER MY SUPERVISION

STATE OF HAWAII
DEPARTMENT OF TRANSPORTATION
HIGHWAYS DIVISION

UTILITY PLAN

HILO BAYFRONT HIGHWAY
Intersection Improvements at Waianuenue Avenue
Federal Aid Project No. NH-019-2(076)

Scale: As Noted Date: Sep, 2026

SHEET No. 2 OF 2 SHEETS

SURVEY PLOTTED BY DATE
DRAWN BY " "
TRACED BY " "
DESIGNED BY " "
QUANTITIES BY " "
CHECKED BY " "

ORIGINAL PLAN
NOTE BOOK
No.

LAST UPDATED: Sep 10, 2026 @ 0h28 pm
PLOT DATE: Sep 22, 2026 @ 0h28 pm
PATH/FILENAME: c:\Users\MaDonnie\AppData\Local\Temp\AcPublish_6420\Task2\HI-MEP\HI-19\19494-Hilo Bayfront Roundabout\Project Files\890 CADD\ SHEETS\47-48_Utility Plan.dwg

FED. ROAD DIST. NO.	STATE	FED. AID PROJ. NO.	FISCAL YEAR	SHEET NO.	TOTAL SHEETS
HAWAII	HAW.	NH-019-2(076)	2026	49	106

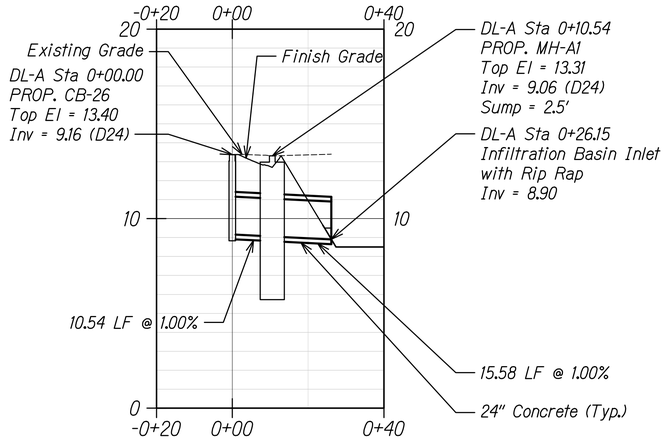

Storm Drain "DL-A" Profile

Horizontal Scale: 1"=20'
Vertical Scale: 1"=4'

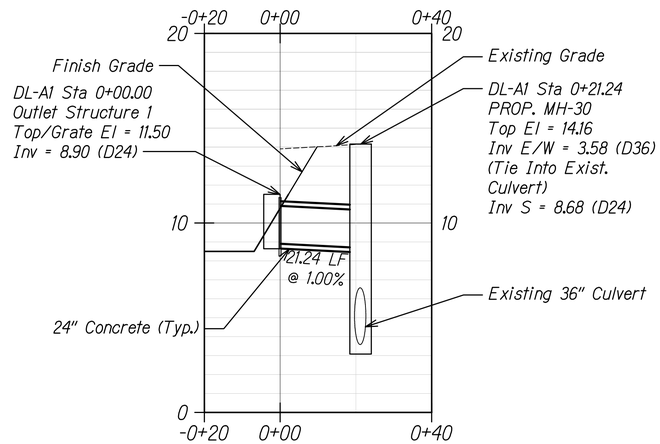

Storm Drain "DL-A1" Profile

Horizontal Scale: 1"=20'
Vertical Scale: 1"=4'

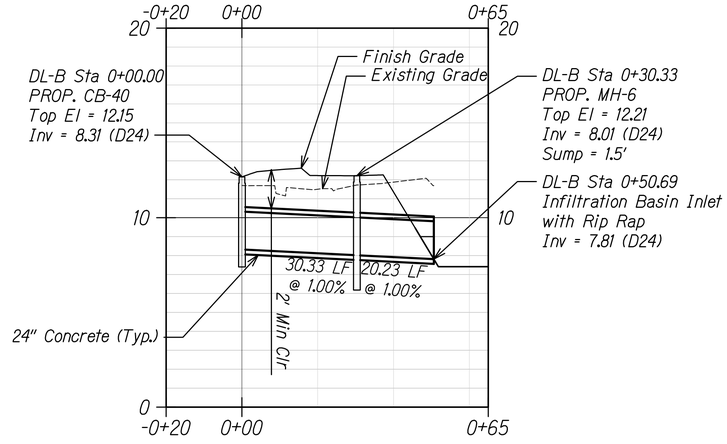

Storm Drain "DL-B" Profile

Horizontal Scale: 1"=20'
Vertical Scale: 1"=4'

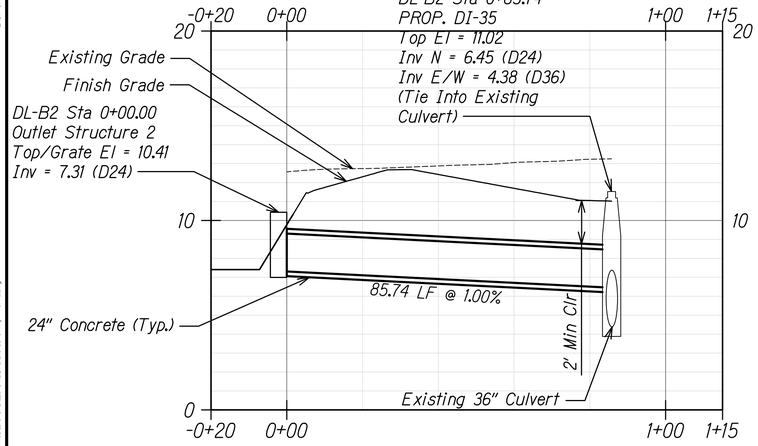

Storm Drain "DL-B2" Profile

Horizontal Scale: 1"=20'
Vertical Scale: 1"=4'

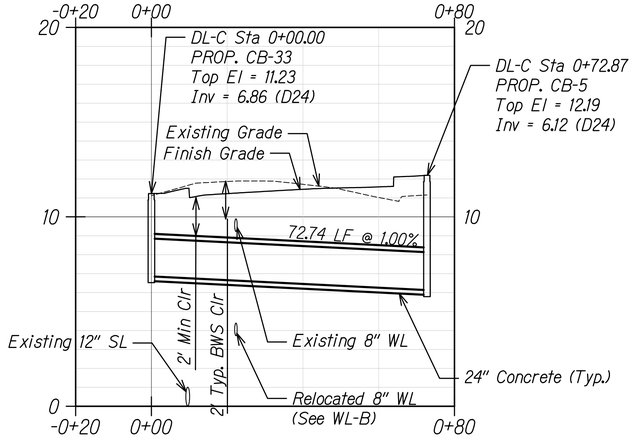

Storm Drain "DL-C" Profile

Horizontal Scale: 1"=20'
Vertical Scale: 1"=4'

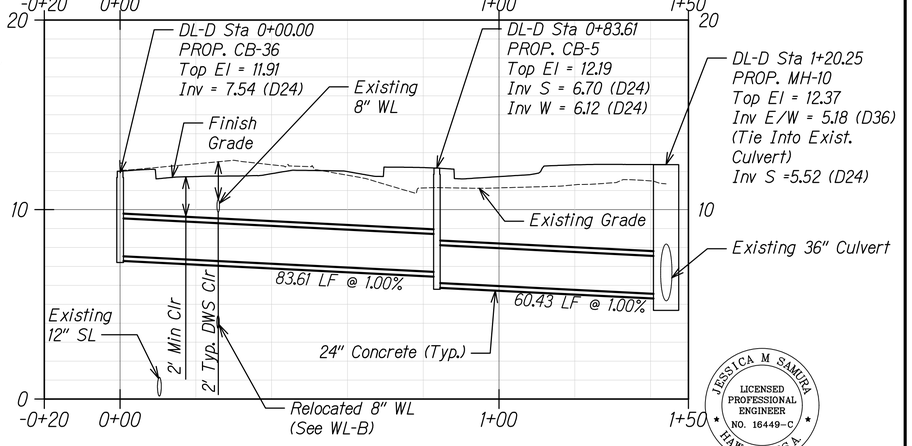

Storm Drain "DL-D" Profile

Horizontal Scale: 1"=20'
Vertical Scale: 1"=4'

JESSICA M SAMURA
LICENSED PROFESSIONAL ENGINEER
NO. 16449-C
HAWAII, U.S.A.

LICENSE EXPIRES 4/30/28

THIS WORK WAS PREPARED BY
ME OR UNDER MY SUPERVISION

STATE OF HAWAII
DEPARTMENT OF TRANSPORTATION
HIGHWAYS DIVISION

UTILITY PROFILES

HILO BAYFRONT HIGHWAY
Intersection Improvements at Waianuenue Avenue
Federal Aid Project No. NH-019-2(076)

Scale: As Noted Date: Sep, 2026

SHEET No. 1 OF 2 SHEETS

20 10 0 20 40
Horizontal
4 3 2 1 0 4 8
Vertical
Graphic Scale in Feet

ORIGINAL PLAN | NOTE BOOK | SURVEY PLOTTED BY | DRAWN BY | TRACED BY | DESIGNED BY | QUANTITIES BY | CHECKED BY | DATE | No.

PATH/FILENAME: C:\Users\MaGorman\AppData\Local\Temp\AcPublish_64\COMEC1-MEP\US1607898\Hilo Bayfront Roundabout\Project Files\ENV CAD\E2D SHEET\5849-50 Utility Profiles.dwg
LAST UPDATE: Sep 10, 2026 @ 0:46:21 pm
PLOT DATE: Sep 22, 2026 @ 9:44 pm

FED. ROAD DIST. NO.	STATE	FED. AID PROJ. NO.	FISCAL YEAR	SHEET NO.	TOTAL SHEETS
HAWAII	HAW.	NH-019-2(076)	2026	50	106

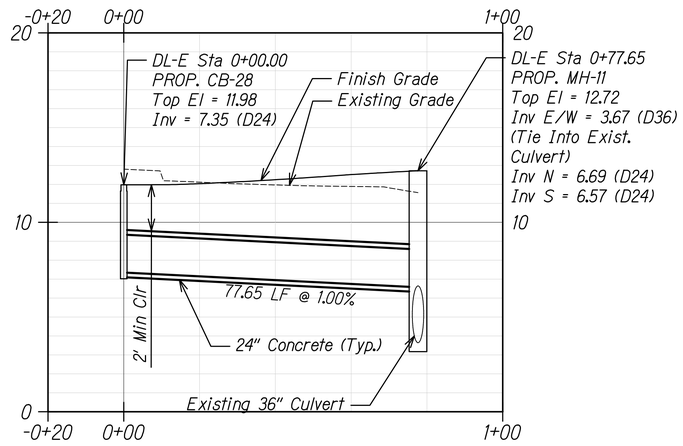

Storm Drain "DL-E" Profile

Horizontal Scale: 1"=20'
Vertical Scale: 1"=4'

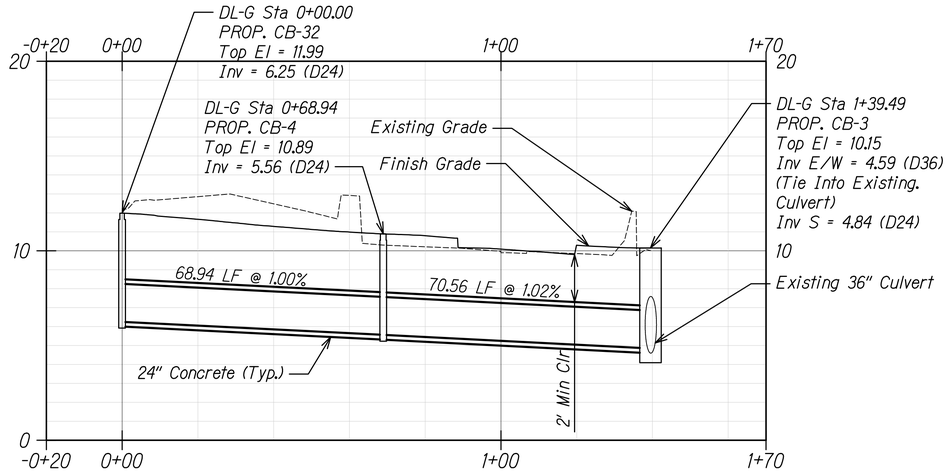

Storm Drain "DL-G" Profile

Horizontal Scale: 1"=20'
Vertical Scale: 1"=4'

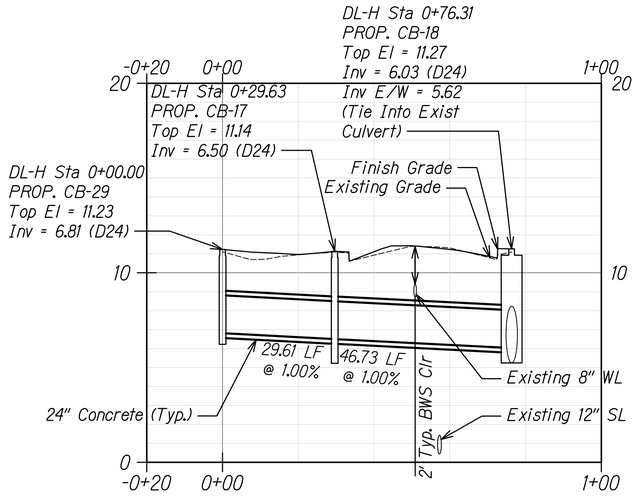

Storm Drain "DL-H" Profile

Horizontal Scale: 1"=20'
Vertical Scale: 1"=4'

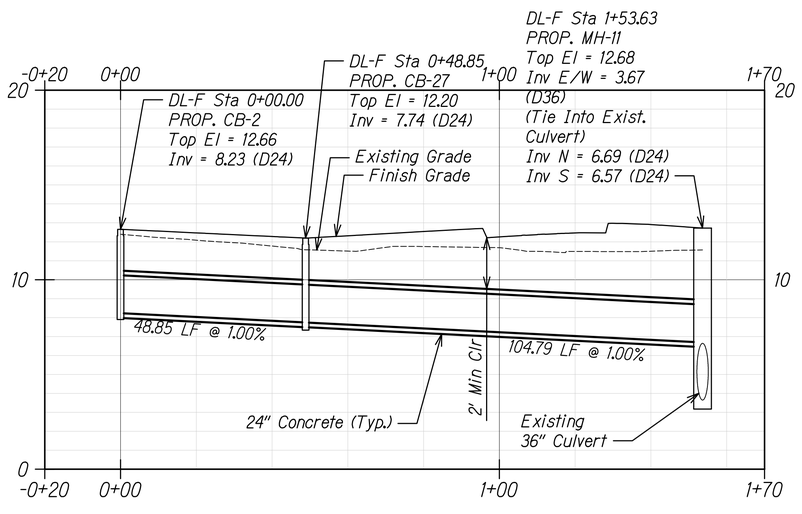

Storm Drain "DL-F" Profile

Horizontal Scale: 1"=20'
Vertical Scale: 1"=4'

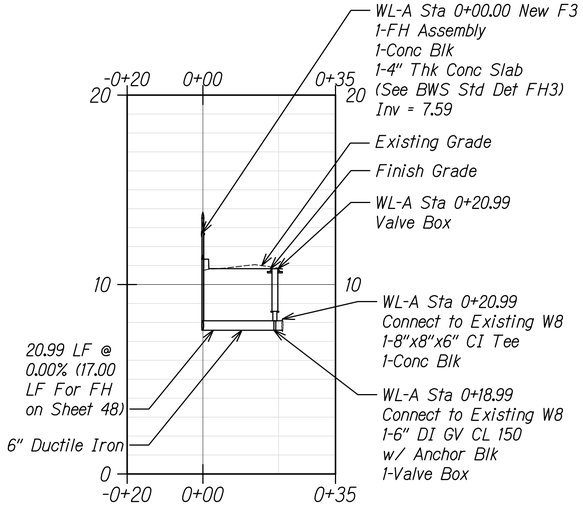

Water Line "WL-A" Profile

Horizontal Scale: 1"=20'
Vertical Scale: 1"=4'

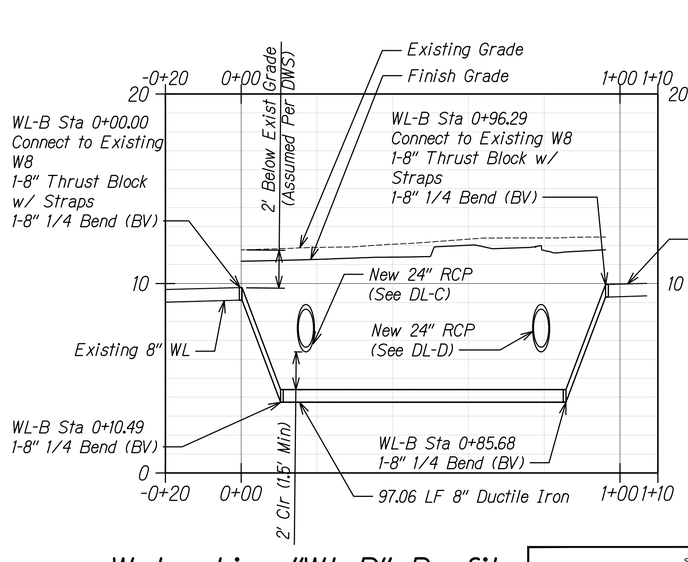

Water Line "WL-B" Profile

Horizontal Scale: 1"=20'
Vertical Scale: 1"=4'

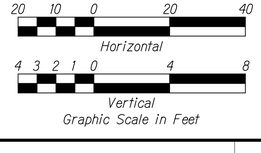

JESSICA M SAMURA
LICENSED PROFESSIONAL ENGINEER
NO. 16449-C
HAWAII, U.S.A.

LICENSE EXPIRES 4/30/28

THIS WORK WAS PREPARED BY ME OR UNDER MY SUPERVISION

STATE OF HAWAII
DEPARTMENT OF TRANSPORTATION
HIGHWAYS DIVISION

UTILITY PROFILES

HILO BAYFRONT HIGHWAY
Intersection Improvements at Waianuenue Avenue
Federal Aid Project No. NH-019-2(076)

Scale: As Noted Date: Sep, 2026

SHEET No. 2 OF 2 SHEETS

50

ORIGINAL PLAN
SURVEY PLOTTED BY DATE
DRAWN BY "
TRACED BY "
DESIGNED BY "
QUANTITIES BY "
CHECKED BY "
NOTE BOOK
No.

LAST UPDATE: Sep 10, 2026 @ 0402 pm PLOT DATE: Sep 22, 2026 @ 0943 pm
PATH/FILENAME: C:\Users\MaConnell\AECOM\ATLAS\DOcuSAECOM\ET-AMERICAS-6074894-Hilo Bayfront Roundabout\Project Files\890 CAD\890 SHEETS\949-50 Utility Profs.dwg

FED. ROAD DIST. NO.	STATE	FED. AID PROJ. NO.	FISCAL YEAR	SHEET NO.	TOTAL SHEETS
HAWAII	HAW.	NH-019-2(076)	2026	51	106

PAVEMENT MARKING & SIGNAGE NOTES

1. Layout of pavement markings and signage shall be done by the Contractor and approved by the Engineer prior to any installation work.
2. Exist pavement markings not incorporated in the final traffic pattern shall be removed as directed by the Engineer. Costs shall be incidental to the various pavement marking items.
3. Raised pavement markers shall not be installed within crosswalks.
4. Final locations of all signs shall be approved by the Engineer prior to any installation work.
5. Exist signs not shown on these plans shall remain as posted unless otherwise directed by the Engineer. Removal and disposal of existing signs and/or posts as designated on these plans shall be incidental to the various signing items.
6. Final locations of all Stop Lines shall be approved by the Engineer prior to installation.
7. All pavement markings shall be as noted on the legend or plans.
8. All preformed pavement marking tapes over existing pavement shall be applied with an approved primer as recommended by the tape manufacturer and as approved by the Engineer. The primer shall be allowed to dry to the tacky stage prior to tape application.
9. Removal of Exist Delineators and Posts as directed by the Engineer shall be considered incidental to the various signing items.
10. Exist signs that are to be replaced shall not be removed until new signs are installed as replacements, or the messages are no longer necessary.
11. Backing for all new regulatory and warning signs shall not be spliced.
12. All sign panels shall conform to Section 629 to 631 of Special Provisions and the latest editions and amendments of the following FHWA publications:
    a. "Manual on Uniform Traffic Control Devices for Street and Highways" (MUTCD)
    b. "Standard Highway Signs"
    c. "Standard Alphabets for Highway Signs"
13. The Contractor shall erect at the beginning of the project and at the end of the project advance construction warning signs as indicated on the plans or as directed by the Engineer for the duration of the highway project and shall be maintained by the Contractor. These signs shall be placed in addition to the required traffic control signs called for in Section 645-Work Zone Traffic Control. The advance construction warning signs shall be new and become the property of the State. The Contractor shall remove, clean, and deliver the signs and posts to the Oahu District Baseyard or as directed by the Engineer at the end of the project.
14. All signs, except Destination Signs, shall be installed on square tube posts, unless otherwise noted. No flanged channel posts shall be allowed.
15. Sign posts shall be painted with yellow reflective paint, except where located behind guardrails. Such paint work shall be considered incidental to sign items.
16. Contractor shall mark the back of all signs using labels and equipment provided by the State. Payment shall be considered incidental to sign items.
17. Contractor shall submit Shop Drawings to the Engineer for acceptance prior to fabricating, Destination, Street Name, Supplemental Street Name, and Non-Standard signs.

LEGEND

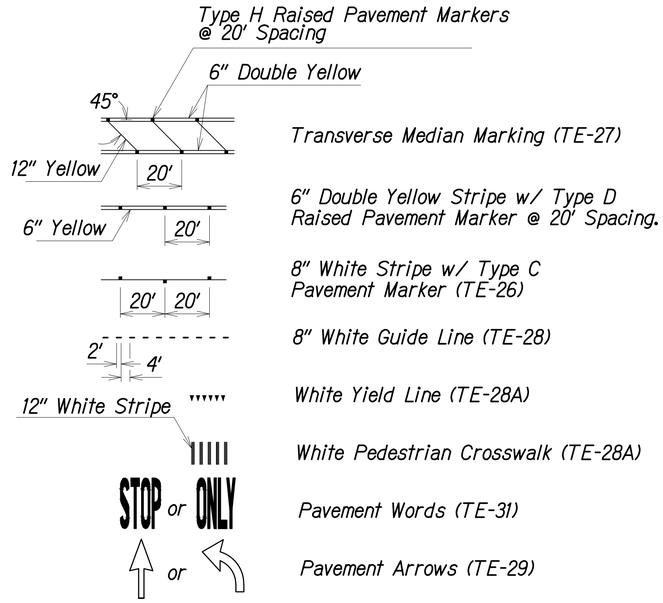

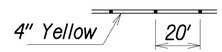

4" Double Yellow Stripe w/ Type D Raised Pavement Marker @ 20' Spacing. (For County)

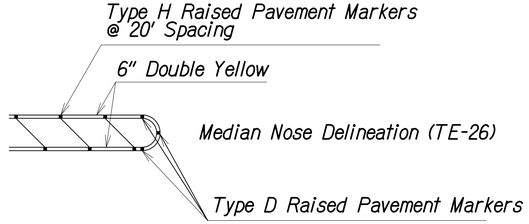

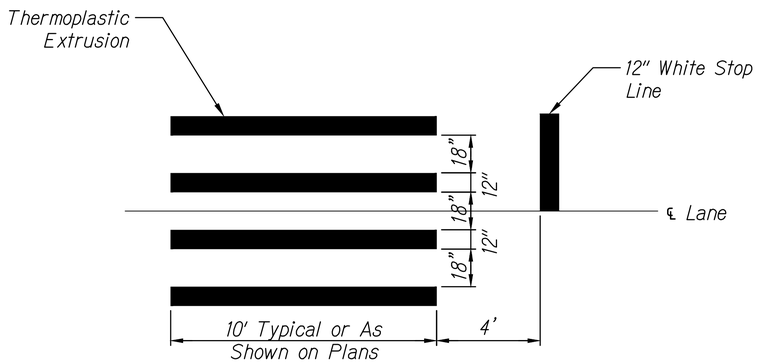

TYPICAL CROSSWALK STRIPING

Not to Scale

JESSICA M SAMURA
LICENSED PROFESSIONAL ENGINEER
NO. 16449-C
HAWAII, U.S.A.

LICENSE EXPIRES 4/30/28

THIS WORK WAS PREPARED BY ME OR UNDER MY SUPERVISION

STATE OF HAWAII
DEPARTMENT OF TRANSPORTATION
HIGHWAYS DIVISION

PAVEMENT MARKING AND SIGNAGE NOTES AND LEGEND

HILO BAYFRONT HIGHWAY

Intersection Improvements at Waianuenue Avenue

Federal Aid Project No. NH-019-2(076)

Scale: As Noted Date: Sep, 2026

SHEET No. / OF / SHEETS

ORIGINAL PLAN | NOTE BOOK | SURVEY PLOTTED BY DATE | DRAWN BY " | TRACED BY " | DESIGNED BY " | QUANTITIES BY " | CHECKED BY "

LAST UPDATE: Jul 28, 2026 @ 02:20 pm PLOT DATE: Sep 22, 2026 @ 09:43 am
PATH:FILENAME: C:\Users\MaCromia\AppData\Local\Temp\AcPublish_6976\HHH-Hilo Bayfront Roundabout\Project Files\800 CADD\20 SHEETS\51-Pavement Marking and Signage Notes and Legend.dwg

FED. ROAD DIST. NO.	STATE	FED. AID PROJ. NO.	FISCAL YEAR	SHEET NO.	TOTAL SHEETS
HAWAII	HAW.	NH-019-2(076)	2026	52	106

Sta 0+09 o/s 16.09'± Rt to Sta 3+75 o/s 48.18'± Rt
6" White Edge Stripe Type C RPM @ 40' o.c.

Sta 0+00 to Sta 3+60
Double 6" Yellow Transverse Median Marking With Type H RPM @ 20' o.c. and 12" Yellow Diagonal Stripe @ 20' o.c.

Sta 1+40 o/s 12.00'± Lt to Sta 11+24 o/s 12.12'± Lt
6" White Edge Stripe Type C RPM @ 40' o.c.

Sta 3+32 to Sta 3+61 o/s 28.85'± Lt
8" Yellow Stripe Type H RPM @ 40' o.c.

Sta 0+00
Tie Into Exist.

Hawaii Belt Road

Varies

To Honoka'a

Varies

EP

Pedestrian Crosswalk

Raised Speed Table Markings and Advanced Warning Markings, For Details See Sheet ##

Sta 3+75 o/s 29.00'± Rt to Sta 3+61 4" White Guide Line, R=72.90'±

Sta 3+61 o/s 28.90'± Lt to Sta 3+61 8" White Stripe, R±57.50' Type H RPM @ 40' o.c.

EP

17.5

Sta 0+40.80
Tie Into Exist.

10.5 10.5 5.0' 16.5 60°

Sta 1+45 o/s 13.45'± Lt to Sta 2+23 o/s 23.26'± Lt
6" White Stripe Type C RPM @ 40' o.c.

Central Island

White Yield Line (Typ.)

Sta 2+71.00 o/s 13.60'± Rt
Sta 2+77.50 o/s 34.00'± Rt
8" White Guide Line

6" Yellow Guide Line

Sta 0+37
Tie Into Exist.

Pedestrian Crosswalk

Hawaii Belt Road

To Hilo

MATCH LINE SEE SHEET 53

Sta 0+40 to Sta 1+45
4" White Stripe

Sta 0+40.80 o/s 12.30'± Lt to Sta 1+45
4" Dashed White Line

Sta 2+62 o/s 17.00'± Lt to Sta 2+71 o/s 13.60'± Rt
8" White Stripe, R122.5'± Type H RPM @ 40' o.c.

Sta 0+38 to Sta 2+18 o/s 17.00'± Lt and Sta 2+71 o/s 13.60'± Rt
8" Yellow Stripe Type H RPM @ 40' o.c. and 12" Yellow Diagonal Stripe @ 20' o.c.

Sta 1+94 o/s 21.71'± Rt to Sta 2+81 o/s 64.77'± Rt
6" White Stripe Type H RPM @ 40' o.c.

Sta 0+64 to Sta 0+80
8" Yellow Stripe Type H RPM @ 40' o.c.

Sta 0+63 o/s 20.80'± Lt to Sta 0+71 o/s 36.00'± Rt
8" White Stripe, R122.5'± Type H RPM @ 40' o.c.

Sta 1+00 o/s 8.93'± Rt and Sta 1+00 o/s 4.47'± Rt to Sta 2+25
4" Double Yellow Stripe

Kamehameha Avenue

8" White Guide Line

15.9 11.1 11.0

White Yield Line (Typ.)

Pedestrian Crosswalk

Pavement Marking Arrow (typ)

Waiuku Drive

Shipman Street

Waianuenue Avenue

Sta 0+76 o/s ±36.00 Rt to Sta 1+79 o/s ±6.50 Rt
8" White Stripe

Sta 2+25
Tie Into Exist.

TRUE NORTH
Scale: 1 in. = 20 ft

0 20 40 60
Scale: 1" = 20' Feet

Legend

Project Limits

Pavement Marking Plan

Scale: 1"=20'

JESSICA M SAMURA
LICENSED PROFESSIONAL ENGINEER
NO. 16449-C
HAWAII, U.S.A.

LICENSE EXPIRES 4/30/28

THIS WORK WAS PREPARED BY ME OR UNDER MY SUPERVISION

STATE OF HAWAII
DEPARTMENT OF TRANSPORTATION
HIGHWAYS DIVISION

PAVEMENT MARKING PLAN

HILO BAYFRONT HIGHWAY
Intersection Improvements at Waianuenue Avenue
Federal Aid Project No. NH-019-2(076)

Scale: As Noted Date: Sep, 2026

SHEET No. 1 OF 2 SHEETS

ORIGINAL PLAN
NOTE BOOK
SURVEY PLOTTED BY DATE
DRAWN BY "
TRACED BY "
DESIGNED BY "
QUANTITIES BY "
CHECKED BY "
No.

LAST UPDATE: Aug 13, 2026 @ 08:52 pm PLOT DATE: Sep 22, 2026 @ 09:44 pm
PATH/FILENAME: C:\Users\$MacUsername\AppData\Local\Temp\AcPublish_6476\Hilo Bayfront Roundabout\Project Files\$R0 CADD\ SHEET-SIZE_Pavement Marking Plan.dwg

FED. ROAD DIST. NO.	STATE	FED. AID PROJ. NO.	FISCAL YEAR	SHEET NO.	TOTAL SHEETS
HAWAII	HAW.	NH-019-2(076)	2026	53	106

8" White Guide Line

White Yield Line
(Typical All Entry Lanes)

Sta 5+34 o/s 24.26'± Lt to
Sta 5+37 o/s 3.40'± Rt
8" White Stripe, R122.5'±
with Type H RPM @ 40' o.c.

Sta 5+33 to Sta 8+66
8" Yellow Stripe
Type H RPM @ 40' o.c.

Sta 1+40 o/s 12.00' Lt to
Sta 11+24 o/s 12.12' Lt
6" White Edge Stripe
Type C @ 40' o.c.

Raised Speed Table Markings
and Advanced Warning Markings,
For Details See Sheet 62

Sta 5+73 o/s 17.69 Rt to
Sta 11+24 o/s 11.72 Rt
6" White Edge Stripe
Type C @ 40' o.c.

Sta 8+66 to Sta 11+17
Double 6" Yellow Transverse
Median Marking With Type
H RPM @ 20' o.c.

TRUE NORTH
Scale: 1 in. = 20 ft

To Honoka'a

Bayfront Highway

To Hilo

Pedestrian Crosswalk

Sta 11+24
Tie Into Exist.

Sta 0+87 o/s 7.71'± Rt to
Sta 0+95 o/s 13.71'± Lt
8" White Stripe, R122.5'±
with Type H RPM @ 40' o.c.

Sta 1+00 o/s 56.96'± Lt to
Sta 2+31 o/s 25.19'± Lt
6" White Edge Stripe
Type C @ 40' o.c.

4" White Stripe (Typ.)

Sta 2+61 o/s 37.57'± Lt to
Sta 4+38 o/s 39.16'± Lt
4" Dashed White Stripe

Sta 2+31 o/s 25.19'± Lt to
Sta 4+97 o/s 25.19'± Lt
6" Solid White Stripe

8" White
Guide Line

Pedestrian Crosswalk

Sta 4+97
Tie Into Exist.

Sta 4+97
Tie Into Exist.

Sta 3+03 o/s 13.42'± Lt to
Sta 4+35 o/s 14.22'± Lt
6" Solid White Stripe

6" Yellow Guide Line

Kamehameha Avenue

Sta 1+35 to Sta 2+72
8" Yellow Stripe
Type H RPM @ 40' o.c.

Pavement Marking
Arrow (typ)

8" Solid White Stripe

Sta 0+88 to Sta 1+13
6" Yellow Stripe
Type H RPM @ 40' o.c.

Sta 0+88 o/s 21.90'± Rt to
Sta 1+15 o/s 18.31'± Rt
8" White Stripe

Sta 1+38 o/s 30.12'± Rt to
Sta 2+63 o/s 34.95'± Rt
6" White Edge Stripe
Type C @ 40' o.c.

Kalakaua Street

10' White Profiled Thermoplastic Stripe
Type C RPM @ 40'-0" o.c.

MATCH LINE SEE SHEET 52

ONLY

10.5 10.5 20.0 29°

45°

Legend

Project Limits

Pavement Marking Plan

Scale: 1"=20'

0 20 40 60
Scale: 1" = 20' Feet

JESSICA M SAMURA
LICENSED PROFESSIONAL ENGINEER
NO. 16449-C
HAWAII, U.S.A.

LICENSE EXPIRES 4/30/28

THIS WORK WAS PREPARED BY
ME OR UNDER MY SUPERVISION

STATE OF HAWAII
DEPARTMENT OF TRANSPORTATION
HIGHWAYS DIVISION

PAVEMENT MARKING PLAN

HILO BAYFRONT HIGHWAY
Intersection Improvements at Waianuenue Avenue
Federal Aid Project No. NH-019-2(076)

Scale: As Noted Date: Sep, 2026

SHEET No. 2 OF 2 SHEETS

ORIGINAL PLAN
NOTE BOOK
No.

SURVEY PLOTTED BY DATE
DRAWN BY "
TRACED BY "
DESIGNED BY "
QUANTITIES BY "
CHECKED BY "

LAST UPDATED: Aug 13, 2026 @ 02:39 pm PLOT DATE: Sep 22, 2026 @ 09:44 pm

PATH:\FILENAME: C:\User\EMC\Dropbox\AECOM\ET AMER\PROJECTS\60768944-Hilo Bayfront Roundabout\Project Files\ESD CADD\ESD SHEETS\ESD_Pavement Marking Plan.dwg

FED. ROAD DIST. NO.	STATE	FED. AID PROJ. NO.	FISCAL YEAR	SHEET NO.	TOTAL SHEETS
HAWAII	HAW.	NH-019-2(076)	2026	54	106

R2-1 36"X48" SPEED LIMIT 35

To Honoka'a

Hawaii Belt Road

NEW TRAFFIC PATTERN AHEAD

W23-2 36"X36" With Flags Temporary Place 775' Ahead of W2-6 for 60 Days After Construction

20 M.P.H.

W2-6 36"X36" W13-1(20)-A 24"x24"

W8-5 24"x24"

ONMED HIGHWAY ENDS

W6-2 36"X36"

19

M1-2 24"X24"

R4-7 36"X48"

W11-2 36"X36" W16-7p 24"x12"

Hamakua Coast Destination Sign and Posts 96"x36"

YIELD R1-2 36"X36"

EP

PARCEL 2

BASELINE

YIELD R1-2 36"X36"

W11-2 36"X36" W16-7p 24"x12"

Central Island

R1-2 36"X36"

R4-7 36"X48"

Hawaii Belt Road

To Hilo

Match Line See Sheet 55

Kamehameha Avenue

Relocated D9-2 24"X24"

SPEED HUMP W17-1 36"x36"

Type II OM

8 HR PARKING 8:00 AM TO 4:00 PM

2 HR PARKING 8:00 AM TO 4:00 PM

R7-108 12"X18" 12"X18" Relocated

20 M.P.H. W2-6 36"X36" W13-1(20)-A 24"x24"

Shipman Street

R4-7 36"X48"

YIELD R1-2 36"X36"

W11-2 36"X36" W16-7p 24"x12"

715-830 AM SCHOOL DAYS

ALOHA & WELCOME TO HOPE TOWN HILO

Relocated

2 HR PARKING 8:30 AM TO 5:30 PM

Relocated R7-108 12"X18"

W11-2 36"X36" W16-7p 24"x12"

ONLY RIGHT LANE R3-5(R) 30"X36" R3-5fP 30"x12"

20 M.P.H. W2-6 36"X36" W13-1(20)-A 24"x24"

NEW TRAFFIC PATTERN AHEAD W23-2 36"X36" With Flags Temporary Place 775' Ahead of W2-6 for 60 Days After Construction

Wailuku Drive

Waianuenue Avenue

TMK: 2-3-04:07
ADDRESS: 10 KAMEHAMEHA AVENUE
OWNER: GENERAL CONTRACTOR LLC

TMK: 2-3-04:08
ADDRESS: 35 WAILUKU DRIVE
OWNER: STATE OF HAWAII,
COUNTY OF HAWAII EXECUTIVE ORDER

TMK: 2-3-04:02
ADDRESS: 9 SHIPMAN STREET
OWNER: F KOEHNEN LTD,
G E K MAMONE & SONS LLC A/S ON FEE

TMK: 2-3-04:16
ADDRESS: 9 SHIPMAN STREET
OWNER: F KOEHNEN LTD,
G E K MAMONE & SONS LLC A/S ON FEE

TRUE NORTH
Scale: 1 in. = 20 ft

0 20 40 60
Scale: 1" = 20' Feet

Signage Plan

Scale: 1"=20'

Legend

- Right-of-Way (ROW)
- Project Limits
- Existing to Remain

JESSICA M SAMORA
LICENSED PROFESSIONAL ENGINEER
NO. 16449-C
HAWAII, U.S.A.

LICENSE EXPIRES 4/30/28

THIS WORK WAS PREPARED BY ME OR UNDER MY SUPERVISION

STATE OF HAWAII
DEPARTMENT OF TRANSPORTATION
HIGHWAYS DIVISION

SIGNAGE PLAN

HILO BAYFRONT HIGHWAY
Intersection Improvements at Waianuenue Avenue
Federal Aid Project No. NH-019-2(076)

Scale: As Noted Date: Sep, 2026

SHEET No. 1 OF 2 SHEETS

ORIGINAL PLAN	SURVEY PLOTTED BY	DATE
	DRAWN BY	" "
NOTE BOOK	TRACED BY	" "
	DESIGNED BY	" "
	QUANTITIES BY	" "
No.	CHECKED BY	" "

LAST UPDATED: Aug 14, 2026 @ 10:40 pm PLOT DATE: Sep 22, 2026 @ 09:45 pm

PATH/FILENAME: c:\Users\McDonald\AppData\Local\Temp\AcPublish_6076\Hilo Bayfront Roundabout\Project Files\B90 CAD\B20 SHEETS\854-55_Signage Plan.dwg

FED. ROAD DIST. NO.	STATE	FED. AID PROJ. NO.	FISCAL YEAR	SHEET NO.	TOTAL SHEETS
HAWAII	HAW.	NH-019-2(076)	2026	55	106

R1-2
36"X36"

W11-2
36"X36"
W16-7p
24"x12"

Angle parking
Guide Sign
24"X24"

BACK-IN ANGLE PARKING
1. SIGNAL
2. STOP
3. REVERSE

Hilo
Bay

SPEED HUMP
W17-1
36"x36"

Type II OM

R4-7
36"X48"

NO PARKING ANY TIME
Relocated
R7-1
12"X18"

R2-1
36"X48"

SPEED LIMIT 25

400' Min.

To Honoka'a

Bayfront Highway

To Hilo

Relocated
R2-1
36"X48"

SPEED LIMIT 35

NEW TRAFFIC PATTERN AHEAD

W23-2
36"X36"
With Flags
Temporary
Place 775'
Ahead of W2-6
for 60 Days
After
Construction

SPEED LIMIT 25

W3-5
36"X36"

Match Line See Sheet 54

Kamehameha Avenue

Kalakaua Street

ONLY

W2-6
36"X36"
W13-1(20)-A
24"x24"

20 M.P.H.

R3-5(L)
30"X36"
R3-5fP
30"x12"

LEFT LANE

W2-6
36"X36"
W13-1(20)-A
24"x24"

20 M.P.H.

W23-2
36"X36"
With Flags
Temporary
Place 775'
Ahead of W2-6
for 60 Days
After
Construction

YIELD
R1-2
36"X36"

W11-2
36"X36"
W16-7p
24"x12"

YIELD
R1-2
36"X36"

NO PARKING LOADING ZONE
R7-6
12X18

2 HR PARKING
8:00 AM TO 4:00 PM
R7-108
12"X18"
Relocated

R4-7
36"X48"

JESSICA M SAMURA
LICENSED PROFESSIONAL ENGINEER
NO. 16449-C
HAWAII, U.S.A.

LICENSE EXPIRES 4/30/28

THIS WORK WAS PREPARED BY ME OR UNDER MY SUPERVISION

Legend

Right-of-Way (ROW)

Project Limits

Signage Plan

Scale: 1"=20'

TRUE NORTH
Scale: 1 in. = 20 ft

0 20 40 60
Scale: 1" = 20' Feet

STATE OF HAWAII
DEPARTMENT OF TRANSPORTATION
HIGHWAYS DIVISION

SIGNAGE PLAN

HILO BAYFRONT HIGHWAY
Intersection Improvements at Waianuenue Avenue
Federal Aid Project No. NH-019-2(076)

Scale: As Noted Date: Sep, 2026

SHEET No. 2 OF 2 SHEETS

ORIGINAL PLAN
NOTE BOOK
SURVEY PLOTTED BY DATE
DRAWN BY "
TRACED BY "
DESIGNED BY "
QUANTITIES BY "
CHECKED BY "
No.

LAST UPDATE: Aug 14, 2026 @ 10:39 pm
PLOT DATE: Sep 22, 2026 @ 09:45 pm
PATH/FILENAME: C:\Users\$Macro\mx\AEDC$\AC\Docs\$AECOM01-MEP\US\60769846-Hilo Bayfront Roundabout\$Project Files\$90 CADD\$ SHEET\$\$\$_Signage Planview

FED. ROAD DIST. NO.	STATE	FED. AID PROJ. NO.	FISCAL YEAR	SHEET NO.	TOTAL SHEETS
HAWAII	HAW.	NH-019-2(076)	2026	56	106

GENERAL NOTES FOR TRAFFIC CONTROL PLAN:

1. The Permitee Shall Make Minor Adjustments At Intersections, Driveways, Bridges, Structures, Etc., To Fit Field Conditions.

2. Cones Or Delineators Shall Be Extended To A Point Where They Are Visible To Approaching Traffic.

3. Traffic Control Devices Shall Be Installed Such That The Sign Or Device Farthest From The Work Area Is Placed First. The Others Shall Then Be Placed Progressively Toward The Work Area.

4. Regulatory And Warning Signs Within The Construction Zone That Are In Conflict With The Traffic Control Plans Shall Be Removed Or Covered.

5. Flaggers And/Or Police Officers Shall Be In Sight Of Each Other Or In Direct Communication At All Times.

6. When Required By The Issuing Office, The Permittee Shall Install A Flashing Arrow Signal As Shown On The Traffic Control Plans.

7. Sign Spacing (D), Taper Lengths (T) And Spacing Of Cones Or Delineators Shall Be As Shown In Table 1, Unless Otherwise Noted On The Traffic Control Plans.

8. All Traffic Lanes Shall Be A Minimum Of 10-Feet Wide.

9. All Construction Warning Signs Shall Be Promptly Removed Or Covered Whenever The Message Is Not Applicable Or Not In Use.

10. The Backs Of All Signs Used For Traffic Control Shall Be Appropriately Covered To Preclude The Display Of Inapplicable Sign Messages (I.E., When Signs Have Messages On Both Faces).

13. Driveways Shall Be Kept Open Unless The Owners Of The Property Using The Right-Of-Way Are Otherwise Provided For Satisfactorily. Further, The Permittee Shall Control Traffic Going In And Out Of Driveways.

14. Buffer And Taper Areas On Approach To Any Work Area Shall Be Kept Clear Of Vehicles And Equipment.

15. At The End of Each Day's Work, Or As Soon As The Work Is Completed, The Permittee Shall Remove All Traffic Control Devices No Longer Needed To Permit Free And Safe Passage Of Public Traffic. Removal Shall be In The Reverse Order Of Installation.

16. Replace Existing Faded Or Obliterated Pavement Markings That Are Necessary For Safe Traffic Flow In The Construction Area, With Temporary Or Permanent Markings Before Opening The Roadway To Public Traffic Each Day.

17. All Work Zone Traffic Control Devices Shall Comply With The "Statewide Guideline For Work Zone Traffic Control Devices," Dated September 13, 2000.

18. Construction Lasting Three (3) Days Or Longer Throughout The Project Corridor Shall Require Long-Term Construction Warning Signs And Regulatory Speed Limit Signs, See The HDOT Work Zone Signing Plan, Notes & Details.

19. Work May Be Performed Only Between The Hours Of 8:30 a.m. And 3:00 p.m., Monday Through Friday, Except State Holidays, Unless When Otherwise Approved In Writing By The HDOT Director.

    During Work Hours, Written Approval By The HDOT Director Shall Be Required For Any Of The Following:
    - Street Closures
    - Ramp Closures
    - Lane Closures Of More Than One (1) Lane.

20. The Contractor Shall Submit The Site-Specific Traffic Control Plan(s) Intended For Use During Construction To The State Of Hawaii Department Of Transportation's District Engineer, With The Traffic Notification, A Minimum Of Three (3) Weeks Prior To The Scheduled Start Of The Associated Construction Activites For Review And Approval. Construction May Not Proceed Until The District Engineer Has Approved The Site-Specified Traffic Control Plan(s).

21. Include A Signed Certification Statement Affirming That The Site-Specific Traffic Control Plan(s) Submitted To HDOT Has Been Prepared Under The Direction Or Supervision Of A Licensed Professional Engineer, Is In Compliance With The Current HDOT And FHWA Standards, And Is An Appropriate Application Of Traffic Control Measures For The Construction Work To Be Performed.

TABLE 1 FOR TRAFFIC CONTROL PLAN

POSTED SPEED LIMIT (M.P.H.)	SIGN SPACING (L) (FEET)	TAPER LENGTH (T) (FEET)		LONGITUDINAL BUFFER SPACE (B) (FEET)	SPACING OF CONES OR DELINEATORS (FEET)		
		W = 12' OR LESS *	W = GREATER THAN 12' *		TAPER	TANGENT	WORK AREA
20	250	200	W X 17	35	20	20	10
25	250	200	W X 17	55	25	25	10
30	250	250	W X 20	85	30	30	10
35	250	250	W X 20	120	35	35	10
40	500	350	W X 30	170	40	40	10
45	500	550	W X 45	220	45	45	10
50	1000	600	W X 50	280	50	50	10
55	1000	700	W X 55	335	55	55	10

* W = WIDTH OF LANE OR OFFSET

JESSICA M SAMORA
LICENSED PROFESSIONAL ENGINEER
NO. 16449-C
HAWAII, U.S.A.

LICENSE EXPIRES 4/30/28

THIS WORK WAS PREPARED BY ME OR UNDER MY SUPERVISION

STATE OF HAWAII
DEPARTMENT OF TRANSPORTATION
HIGHWAYS DIVISION

GENERAL NOTES FOR TRAFFIC CONTROL

HILO BAYFRONT HIGHWAY

Intersection Improvements at Waianuenue Avenue

Federal Aid Project No. NH-019-2(076)

Scale: As Noted Date: Sep, 2026

SHEET No. 1 OF 1 SHEETS

56

ORIGINAL PLAN
NOTE BOOK
SURVEY PLOTTED BY DATE
DRAWN BY " "
TRACED BY " "
DESIGNED BY " "
QUANTITIES BY " "
CHECKED BY " "
No.

LAST UPDATE: Aug 13, 2026 @ 0h48 pm PLOT DATE: Sep 22, 2026 @ 0h46 pm
PATH/FILENAME: C:\Users\MsGomez\AECOM\ACCDocs\24CC0MEC\1-AMERIGH-6074844-Hilo Bayfront Roundabout\Project Files\890 CADD\20 SHEETS\56_General Notes for Traffic Controlwg

FED. ROAD DIST. NO.	STATE	FED. AID PROJ. NO.	FISCAL YEAR	SHEET NO.	TOTAL SHEETS
HAWAII	HAW.	NH-019-2(076)	2026	57	106

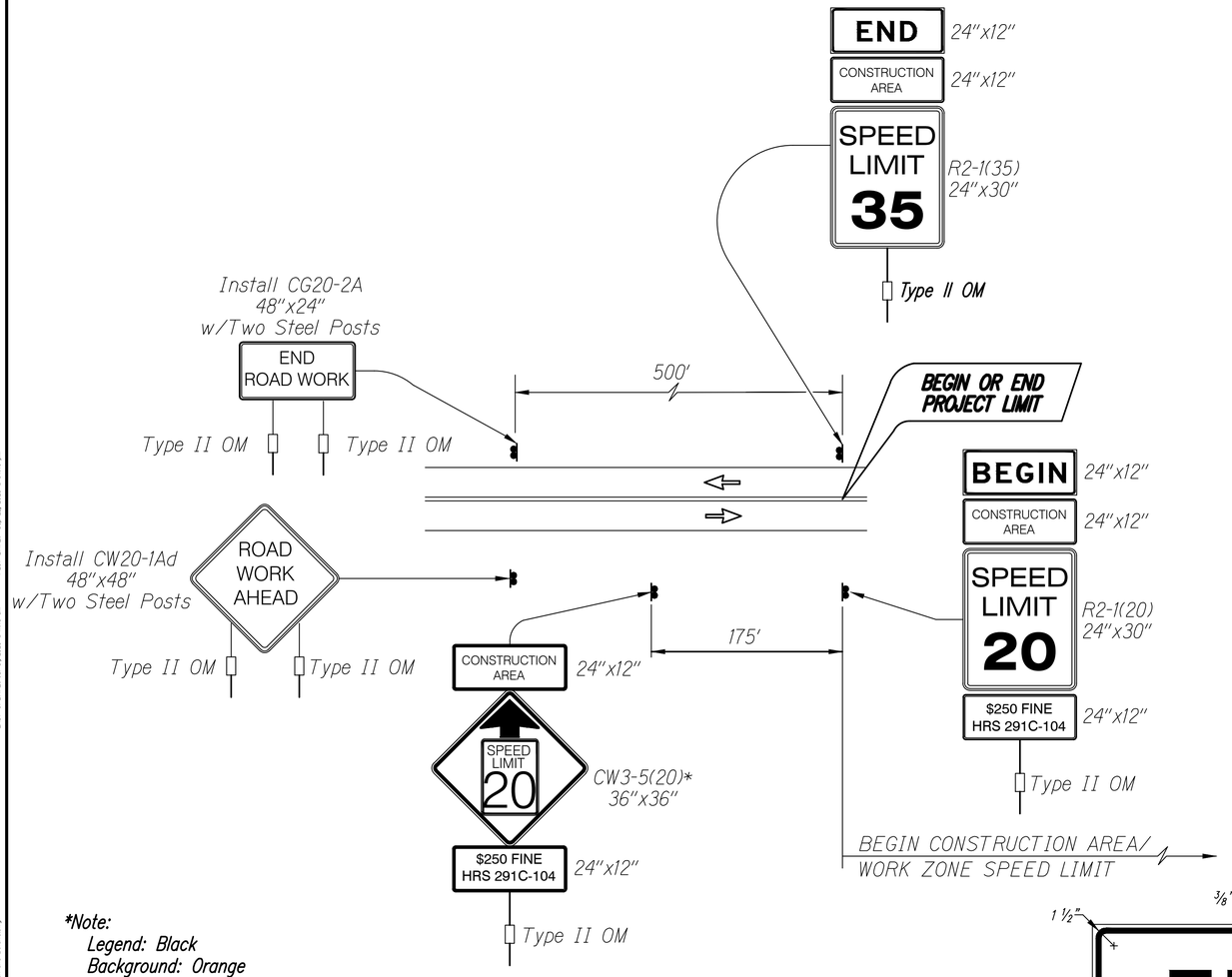

*Note:
Legend: Black
Background: Orange
Speed Limit: Black on White

TYPICAL DETAIL FOR CONSTRUCTION SIGNS
ON TWO LANE OR MULTILANE UNDIVIDED LOW SPEED HIGHWAY

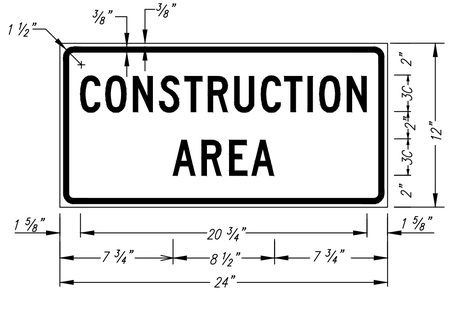

LEGEND: BLACK
BACKGROUND: ORANGE

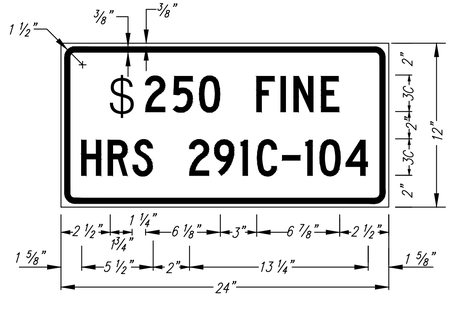

LEGEND: BLACK
BACKGROUND: WHITE

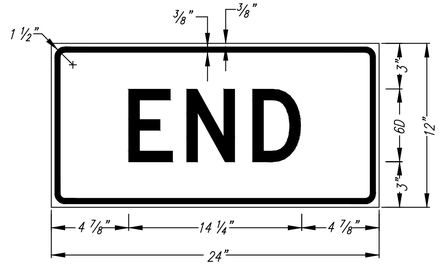

LEGEND: BLACK
BACKGROUND: ORANGE

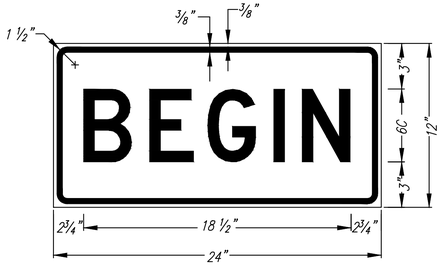

LEGEND: BLACK
BACKGROUND: ORANGE

JESSICA M SAMURA
LICENSED PROFESSIONAL ENGINEER
NO. 16449-C
HAWAII, U.S.A.

LICENSE EXPIRES 4/30/28

THIS WORK WAS PREPARED BY ME OR UNDER MY SUPERVISION

STATE OF HAWAII
DEPARTMENT OF TRANSPORTATION
HIGHWAYS DIVISION

WORK ZONE SIGNING PLAN AND DETAILS

HILO BAYFRONT HIGHWAY
Intersection Improvements at Waianuenue Avenue
Federal Aid Project No. NH-019-2(076)

Scale: As Noted Date: Sep, 2026

SHEET No. 1 OF 1 SHEETS

Work Zone Notes:

1. This Work Zone Sign Plan is intended for use on long-term stationary work zones/construction phases (3 days or more). All work zones or construction phases less than 3 days duration shall comply with HDOT 2005 Standard Specifications, Section 645, Table 645-1 and Figure 1.
2. All existing regulatory speed limit signs with posts within the work zone/project limits shall be removed and replaced with work zone speed limit sign assemblies (R2-1(20) and CW3-5(20) with "CONSTRUCTION AREA" and "$250 FINE HRS 291C-104" Supplemental Signs).
3. Construction sign assemblies shall be installed on both the approaching and trailing ends of each work zone as shown on this plan.
4. Each construction warning sign assembly shall have a minimum of two (2) Type II OM. Each work zone speed limit assembly shall have a minimum of one (1) Type II OM. Installation of each Type II OM shall be considered incidental to Item No. 645.0100, Traffic Control.
5. Upon the completion of all physical work or as directed by the Engineer, all construction signs and work zone speed limit assemblies shall be removed. All speed limit signs and posts that were existing at the start of the project within the work zone/project limits shall be restored back to their original locations and configurations.
6. Placement of construction signs shall not obstruct the path of pedestrians and bicyclists.
7. The removal and restoration of existing regulatory speed limit signs with new posts along with the installation, maintenance and removal of work zone speed limit sign assemblies shall be considered incidental to Item No. 645.0100, Traffic Control. Sign covers shall not allow any portion of the sign being covered to be visible. If the sign has more than one side, cover shall completely cover each side.
8. This Work Zone Signing Plan shall be used only for low speed highways (design speeds of 45 mph or less).

ORIGINAL PLAN | SURVEY PLOTTED BY | DRAWN BY | TRACED BY | DESIGNED BY | QUANTITIES BY | CHECKED BY | DATE | NOTE BOOK | No.

LAST UPDATED: Jul 31, 2026 @ 1540 am
PLOT DATE: Sep 22, 2026 @ 0946 am
PATH/FILENAME: c:\Users\Micromed\AECOM\ECI-AMERICAS-ENTM\Hilo Bayfront Roundabout\Project Files\890 CADD\20 SHEETS\57_Work Zone Signing Plan and Details.dwg

FED. ROAD DIST. NO.	STATE	FED. AID PROJ. NO.	FISCAL YEAR	SHEET NO.	TOTAL SHEETS
HAWAII	HAW.	NH-019-2(076)	2026	58	106

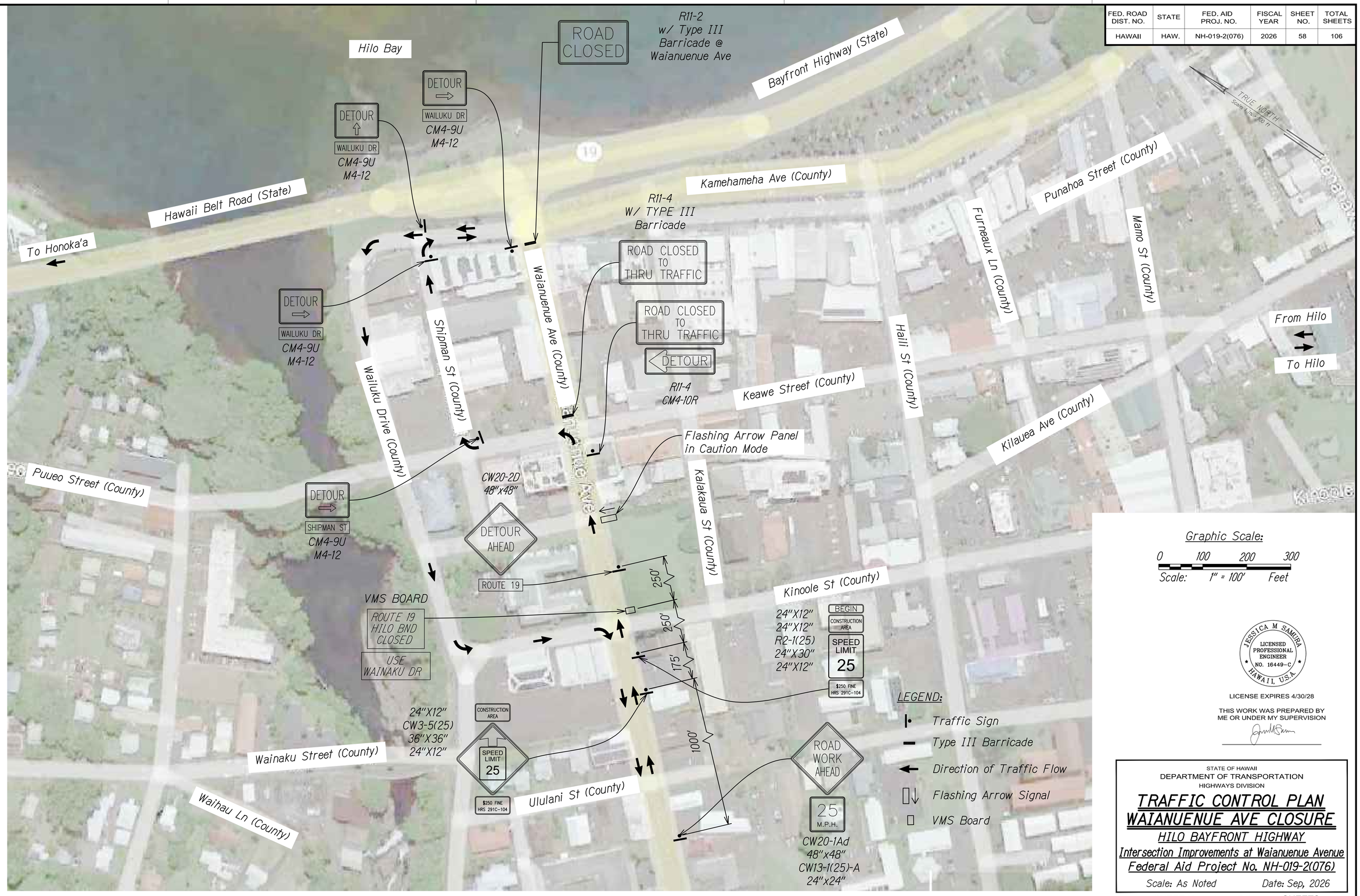

Graphic Scale:

0 100 200 300

Scale: 1" = 100' Feet

JESSICA M SAMURA
LICENSED PROFESSIONAL ENGINEER
NO. 16449-C
HAWAII, U.S.A.

LICENSE EXPIRES 4/30/28

THIS WORK WAS PREPARED BY ME OR UNDER MY SUPERVISION

STATE OF HAWAII
DEPARTMENT OF TRANSPORTATION
HIGHWAYS DIVISION

TRAFFIC CONTROL PLAN
WAIANUENUE AVE CLOSURE
HILO BAYFRONT HIGHWAY
Intersection Improvements at Waianuenue Avenue
Federal Aid Project No. NH-019-2(076)

Scale: As Noted Date: Sep, 2026

SHEET No. / OF / SHEETS

ORIGINAL PLAN	SURVEY PLOTTED BY	DATE
	DRAWN BY	"
NOTE BOOK	TRACED BY	"
	DESIGNED BY	"
	QUANTITIES BY	"
No.	CHECKED BY	"

LAST UPDATE: Aug 5, 2026 @ 03:53 pm PLOT DATE: Sep 22, 2026 @ 09:46 pm

PATH/FILENAME: c:\Users\MacKenzie\AppData\Local\Temp\AcPublish_14676\Project Files\ERR CAD\ERR SHEET\1856_Traffic Control Plan - Waianuenue Ave Closure.dwg

FED. ROAD DIST. NO.	STATE	FED. AID PROJ. NO.	FISCAL YEAR	SHEET NO.	TOTAL SHEETS
HAWAII	HAW.	NH-019-2(076)	2026	59	106



LEGEND:

- Traffic Sign
- Type III Barricade
- Direction of Traffic Flow
- Flashing Arrow Signal
- VMS Board

Graphic Scale:

0 100 200 300

Scale: 1" = 100' Feet

JESSICA M SAMURA
LICENSED PROFESSIONAL ENGINEER
NO. 16449-C
HAWAII, U.S.A.

LICENSE EXPIRES 4/30/28

THIS WORK WAS PREPARED BY ME OR UNDER MY SUPERVISION

STATE OF HAWAII
DEPARTMENT OF TRANSPORTATION
HIGHWAYS DIVISION

TRAFFIC CONTROL PLAN SOUTHBOUND DETOUR

HILO BAYFRONT HIGHWAY

Intersection Improvements at Waianuenue Avenue
Federal Aid Project No. NH-019-2(076)

Scale: As Noted Date: Sep, 2026

SHEET No. 1 OF 2 SHEETS

ORIGINAL PLAN
NOTE BOOK
SURVEY PLOTTED BY DATE
DRAWN BY "
TRACED BY "
DESIGNED BY "
QUANTITIES BY "
CHECKED BY "

PLOT DATE: Sep 22, 2026 @ 09:46 pm
LAST UPDATE: Aug 13, 2026 @ 05:39 pm
PATH/FILENAME: C:\Users\MaDonnie\AppData\Local\Temp\AcPublish_6204\[2] MERGED\59-60_Traffic Control Plan - Hilo Bayfront Southbound Detour.dwg

FED. ROAD DIST. NO.	STATE	FED. AID PROJ. NO.	FISCAL YEAR	SHEET NO.	TOTAL SHEETS
HAWAII	HAW.	NH-019-2(076)	2026	60	106



MATCH LINE SEE SHEET 59

Graphic Scale:

0 100 200 300

Scale: 1" = 100' Feet

JESSICA M SAMURA
LICENSED PROFESSIONAL ENGINEER
NO. 16449-C
HAWAII, U.S.A.

LICENSE EXPIRES 4/30/28

THIS WORK WAS PREPARED BY ME OR UNDER MY SUPERVISION

STATE OF HAWAII
DEPARTMENT OF TRANSPORTATION
HIGHWAYS DIVISION

TRAFFIC CONTROL PLAN SOUTHBOUND DETOUR

HILO BAYFRONT HIGHWAY

Intersection Improvements at Waianuenue Avenue
Federal Aid Project No. NH-019-2(076)

Scale: As Noted Date: Sep, 2026

SHEET No. 2 OF 2 SHEETS

ORIGINAL PLAN
NOTE BOOK
SURVEY PLOTTED BY DATE
DRAWN BY "
TRACED BY "
DESIGNED BY "
QUANTITIES BY "
CHECKED BY "
No.

LAST UPDATE: Aug 13, 2026 @ 08:59 pm PLOT DATE: Sep 22, 2026 @ 09:47 pm
PATH:F:\LENAMG\ C:\Users\$MCConnell\AppData\Local\Temp\AcPublish_4812\[Project Files]$(0) CM2$(0) SHEET SIZE$(0)-Traffic Control Plan - Hilo Bayfront Southbound Closure.dwg

FED. ROAD DIST. NO.	STATE	FED. AID PROJ. NO.	FISCAL YEAR	SHEET NO.	TOTAL SHEETS
HAWAII	HAW.	NH-019-2(076)	2026	61	106

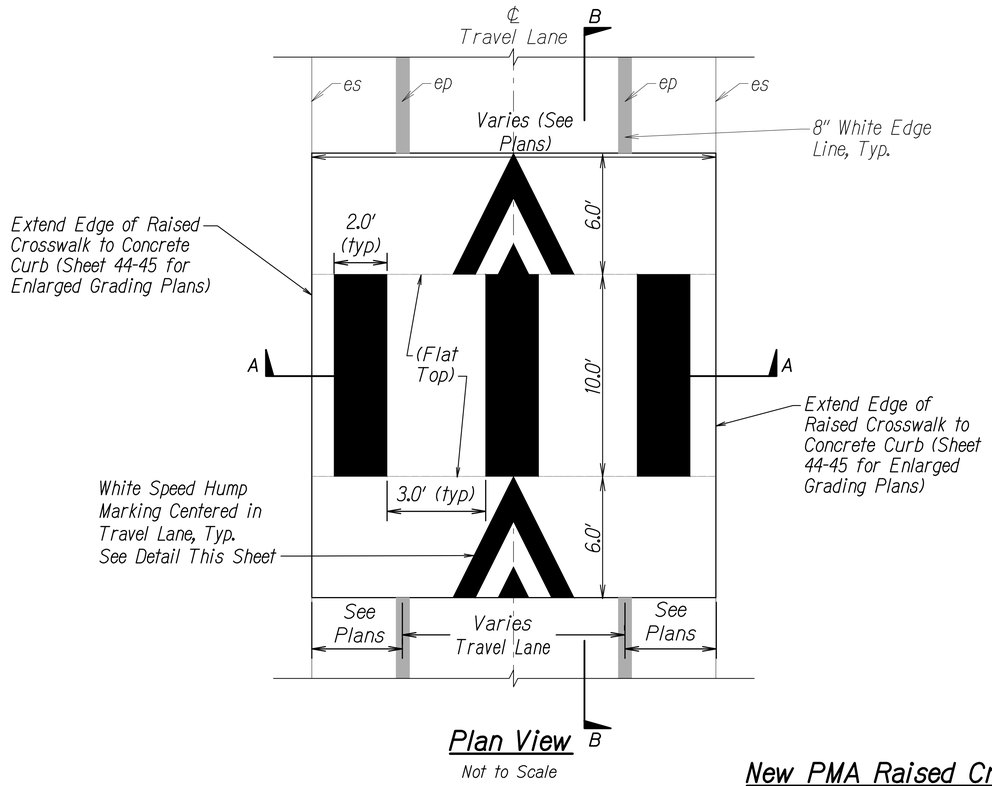

Plan View

Not to Scale

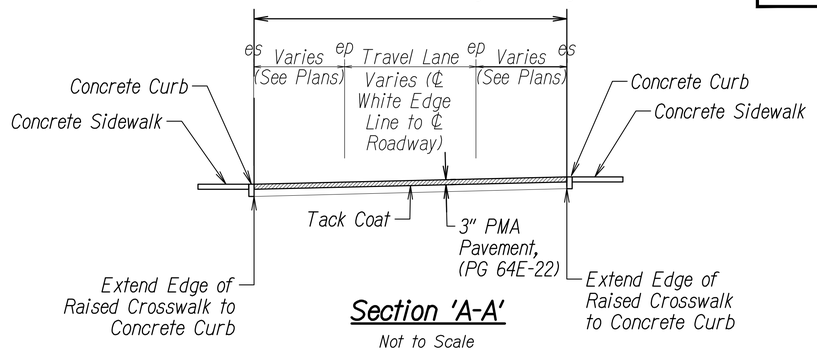

Section 'A-A'

Not to Scale

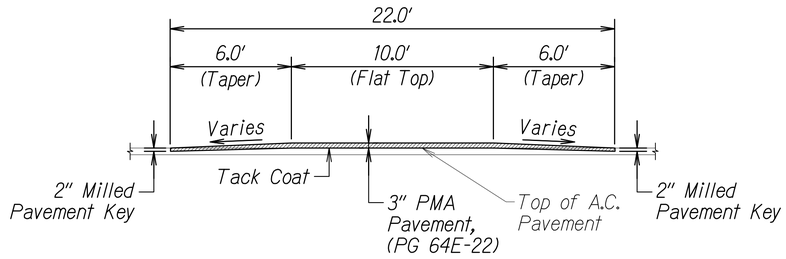

Section 'B-B'

Not to Scale

New PMA Raised Crosswalk Typical Detail

Not to Scale

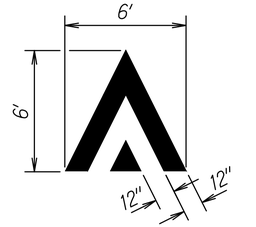

Speed Hump Marking

Not to Scale

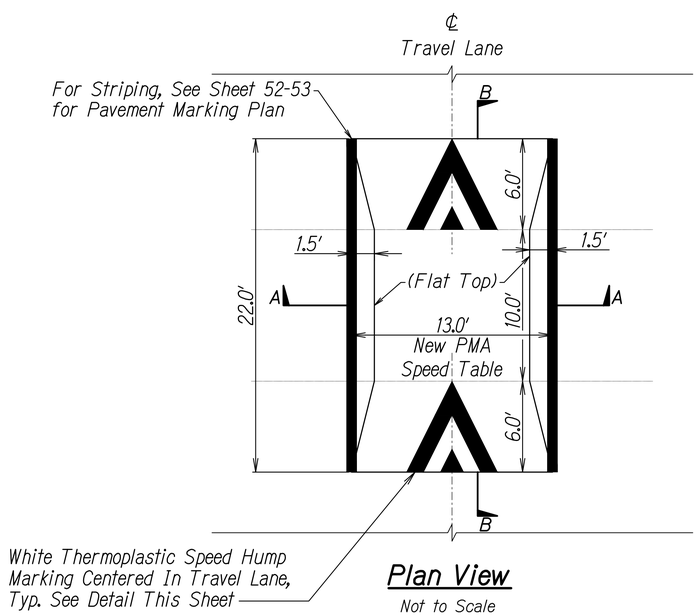

Plan View

Not to Scale

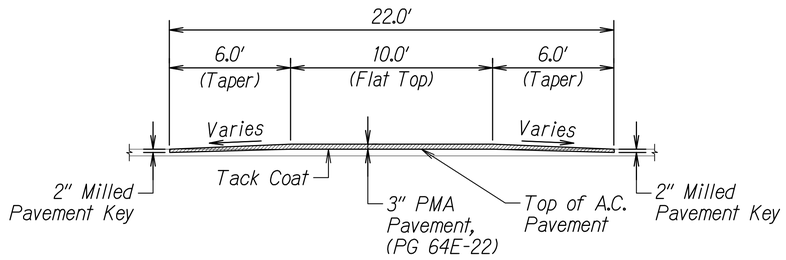

Section 'B-B'

Not to Scale

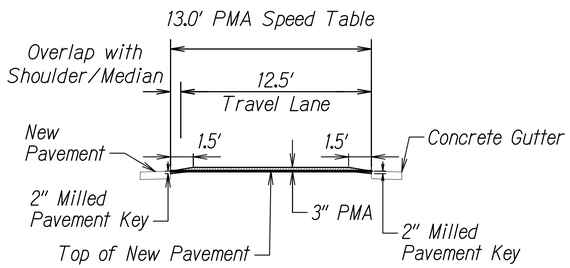

Section 'A-A'

Not to Scale

New PMA Speed Table Detail

Not to Scale

JESSICA M SAMURA
LICENSED PROFESSIONAL ENGINEER
NO. 16449-C
HAWAII, U.S.A.

LICENSE EXPIRES 4/30/28

THIS WORK WAS PREPARED BY ME OR UNDER MY SUPERVISION

STATE OF HAWAII
DEPARTMENT OF TRANSPORTATION
HIGHWAYS DIVISION

DETAILS

HILO BAYFRONT HIGHWAY
Intersection Improvements at Waianuenue Avenue
Federal Aid Project No. NH-019-2(076)

Scale: As Noted Date: Sep, 2026

SHEET No. 1 OF 6 SHEETS

ORIGINAL PLAN
NOTE BOOK
SURVEY PLOTTED BY DATE
DRAWN BY "
TRACED BY "
DESIGNED BY "
QUANTITIES BY "
CHECKED BY "
No.

LAST UPDATE: Aug 14, 2026 @ 0259 pm PLOT DATE: Sep 22, 2026 @ 0947 pm

PATH/FILENAME: C:\Users\EMcCormick\AppData\Local\Temp\AcPublish_6076\Hilo Bayfront Roundabout\Project Files\ENV CAD\E0 SHEETS\E61-66_Details.dwg

FED. ROAD DIST. NO.	STATE	FED. AID PROJ. NO.	FISCAL YEAR	SHEET NO.	TOTAL SHEETS
HAWAII	HAW.	NH-019-2(076)	2026	62	106

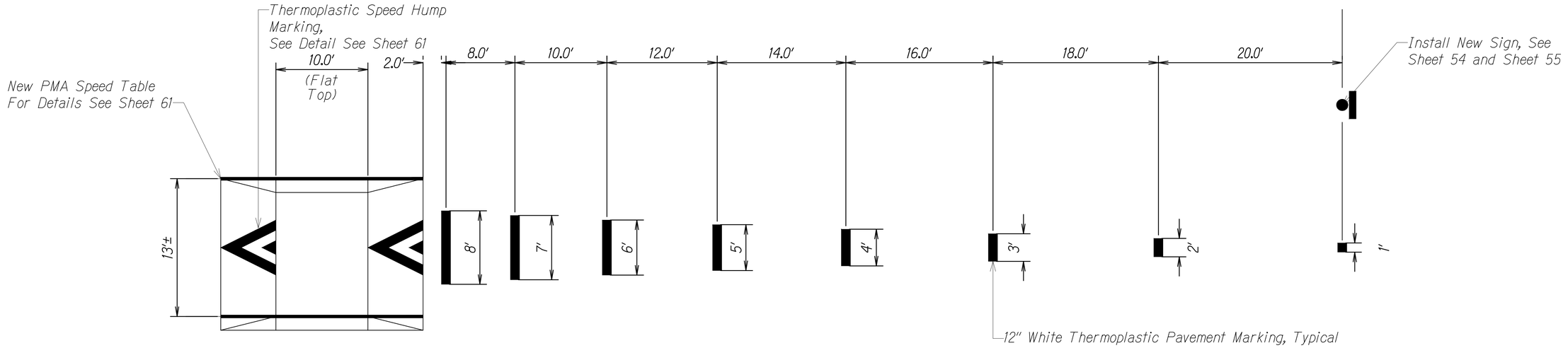

Speed Table Advance Warning Markings Detail

Not To Scale

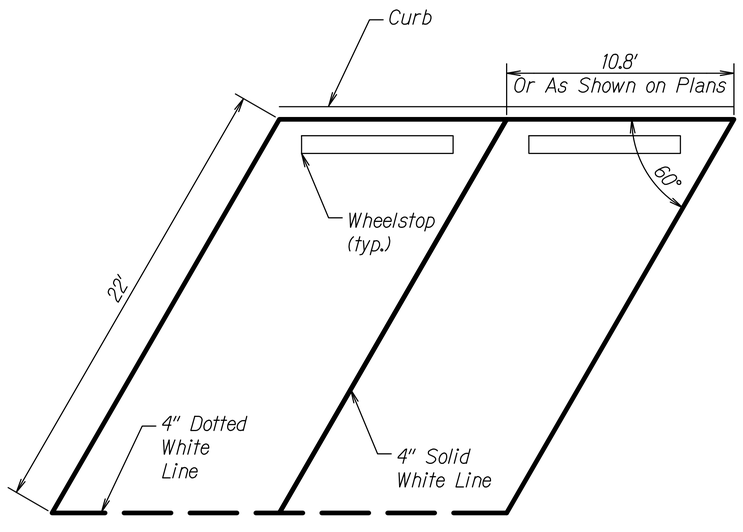

Parking Stall Pavement Marking Detail

Not to Scale

Kamehameha Avenue (South)

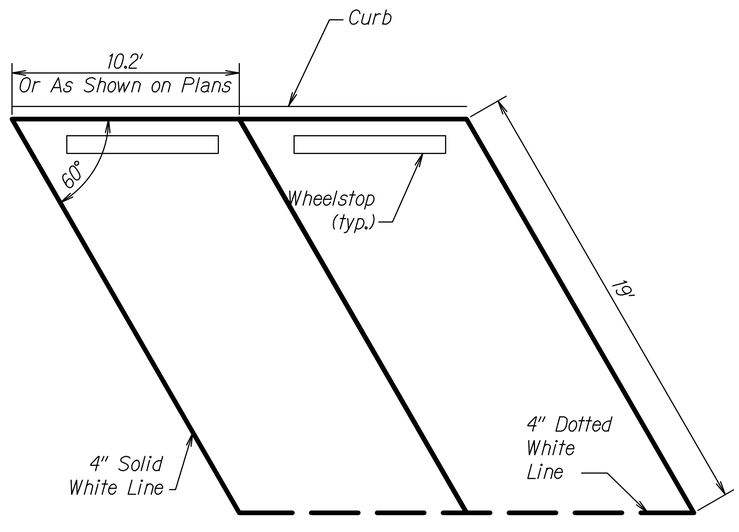

Parking Stall Pavement Marking Detail

Not to Scale

Kamehameha Avenue (North)

JESSICA M SAMURA
LICENSED PROFESSIONAL ENGINEER
NO. 16449-C
HAWAII, U.S.A.

LICENSE EXPIRES 4/30/28

THIS WORK WAS PREPARED BY ME OR UNDER MY SUPERVISION

STATE OF HAWAII
DEPARTMENT OF TRANSPORTATION
HIGHWAYS DIVISION

DETAILS

HILO BAYFRONT HIGHWAY
Intersection Improvements at Waianuenue Avenue
Federal Aid Project No. NH-019-2(076)

Scale: As Noted Date: Sep, 2026

SHEET No. 2 OF 6 SHEETS

ORIGINAL PLAN
NOTE BOOK
No.
SURVEY PLOTTED BY
DRAWN BY
TRACED BY
DESIGNED BY
QUANTITIES BY
CHECKED BY
DATE

LAST UPDATE: Aug 14, 2026 @ 0939 pm PLOT DATE: Sep 22, 2026 @ 0947 pm

PATH:\FILENAME: C:\User\EMC\Corridor\HAWDOT\ACCDocs\EACOM\EACOM21-1AME\R03\1607HBWH-Hilo Bayfront Roundabout\Project Files\EBD CADD\D. SHEET\SE0-56_Details.dwg

FED. ROAD DIST. NO.	STATE	FED. AID PROJ. NO.	FISCAL YEAR	SHEET NO.	TOTAL SHEETS
HAWAII	HAW.	NH-019-2(076)	2026	63	106

NOTES:

1. All hardware, posts and fasteners shall be hot-dip zinc coated galvanized after fabrication. No punching, drilling or cutting will be permitted after galvanizing.
2. Where conditions require, special post lengths in increments of 6 inches may be specified by the Engineer.
3. All fasteners, posts, and rail elements (i.e FBB03, PWE01, RWM04B, etc.) shall conform to the latest edition and amendments of "A Guide to Standardized Highway Barrier Rail Hardware", a report prepared and approved by the AASHTO-AGC-ARTBA Joint Cooperative Committee, Subcommittee on New Highway Materials, Task Force 13 Report. Dimensions of fasteners, posts and rail elements have been converted from metric units into their present form.
4. The blockout of offset block shall be approved by the state.
5. All new guardrail systems (systems consists of total length of guardrail including both end treatments) shall include the additional paved area.
6. After the guardrail posts are installed in the paved area, the contractor shall fill/seal around each guardrail posts and all cracks in the paved area caused during the guardrail posts installation. If required by the inspector/engineer, the contractor shall tamper the paved area around the guardrail post prior to filling/sealing. All costs associated with this shall not be paid for separately, but shall be considered incidental to the various guardrail items.
7. When standards for the fill slope area cannot be met, a site specific, engineer approved design may be used.
8. Minimum working width (clear distance) between back of MGS Post to any fixed objects is 4'-1"(49").
9. New Polymer-Modified Asphalt (PMA) pavement at guardrails shall extend 6 feet longitudinally beyond terminal ends.
10. Reflector Markers (RM-5) mounted on guardrails shall be spaced every 25 feet. RM-5'S shall not be installed on terminal sections. Furnishing and installing of each RM-5 shall be considered incidental to the guardrail system.
11. Details shown on this sheet reference the HDOT Statewide Guidance for Permanent Highway Safety Hardware, Memorandum HWY-TD 17-2.0314, and is intended only for the contractor's information. Guardrails including all hardware, posts, spacing, height, etc. shall be installed per manufacturer's guidelines and details.

GUARDRAIL TYPE	DIMENSION	
	H	A
MGS w/ Standard 8" Offset Block	2'-1"	1'-6"
MGS w/ No Blockout	2'-7/8"	9 1/4"

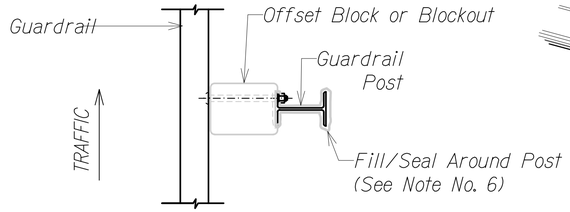

PLAN

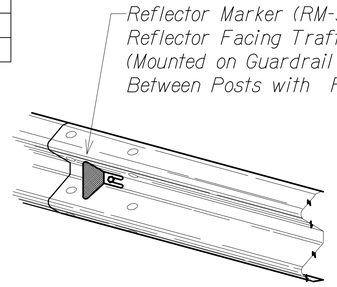

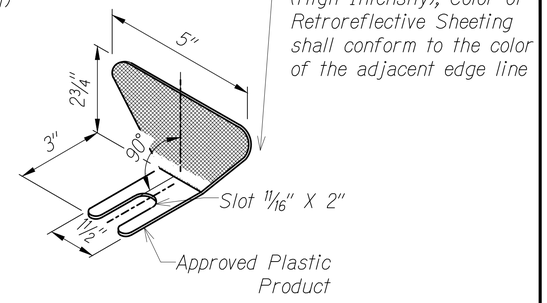

REFLECTOR MARKER (RM-5) DETAIL AND TYPICAL INSTALLATION

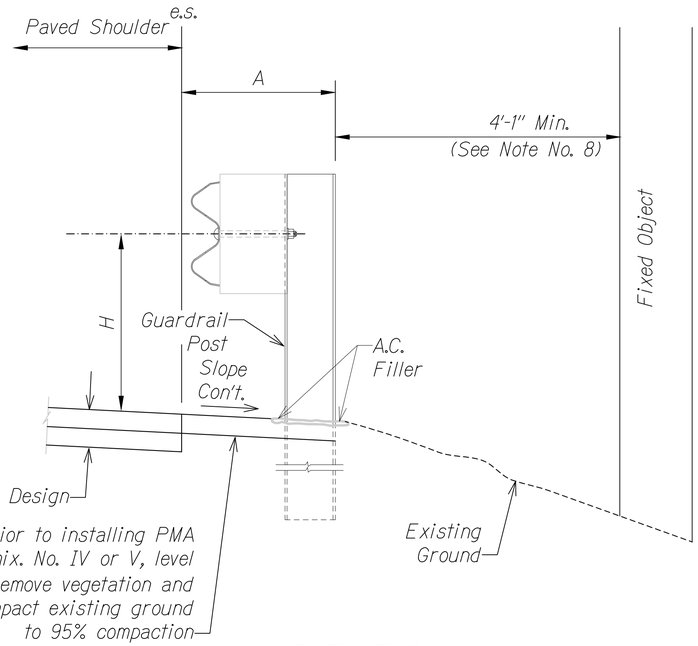

ELEVATION
TYPICAL GUARDRAIL INSTALLATION

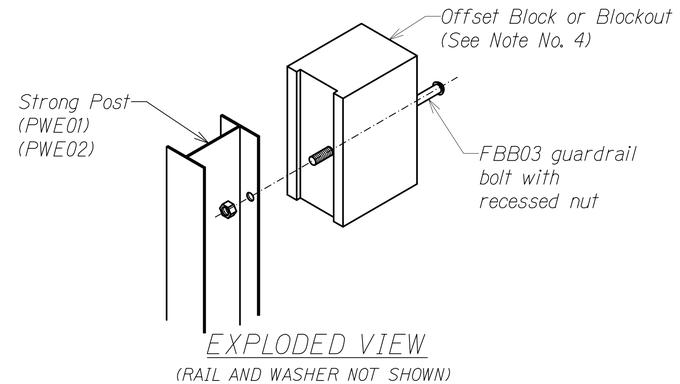

EXPLODED VIEW
(RAIL AND WASHER NOT SHOWN)

STEEL POST AND BLOCK DETAIL

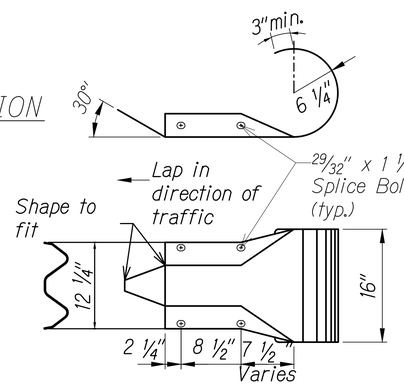

DESIGNATOR	BASE METAL THICKNESS
RWE03a	12 Gauge

W-BEAM END SECTION
(ROUNDED RWE03a)

JESSICA M SAMURA
LICENSED PROFESSIONAL ENGINEER
NO. 16449-C
HAWAII, U.S.A.

LICENSE EXPIRES 4/30/28

THIS WORK WAS PREPARED BY ME OR UNDER MY SUPERVISION

STATE OF HAWAII
DEPARTMENT OF TRANSPORTATION
HIGHWAYS DIVISION

DETAILS

HILO BAYFRONT HIGHWAY
Intersection Improvements at Waianuenue Avenue
Federal Aid Project No. NH-019-2(076)

Scale: As Noted Date: Sep, 2026

SHEET No. 3 OF 6 SHEETS

63

ORIGINAL PLAN
NOTE BOOK
SURVEY PLOTTED BY DATE
DRAWN BY "
TRACED BY "
DESIGNED BY "
QUANTITIES BY "
CHECKED BY "

LAST UPDATE: Aug 14, 2026 @ 0259 pm PLOT DATE: Sep 22, 2026 @ 0947 pm
PATH/FILENAME: C:\Users\MsCorreia\AppData\Local\Bentley\ActivePublish\Temp\{4AEC0AE2-1AE1-4E0C-B4CC-D5CC84EC0DB4}-Hilo Bayfront Roundabout\Project Files\800 CADD\800 SHEETS\800-56L.2dwl.dwg

FED. ROAD DIST. NO.	STATE	FED. AID PROJ. NO.	FISCAL YEAR	SHEET NO.	TOTAL SHEETS
HAWAII	HAW.	NH-019-2(076)	2026	64	106

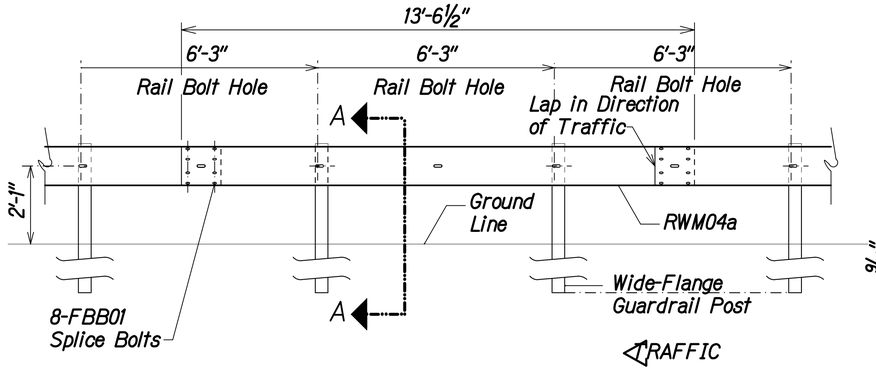

ELEVATION

MIDWEST GUARDRAIL SYSTEM WITH STANDARD 8" OFFSET BLOCK (SGR47)

DESIGNATOR	BASE METAL THICKNESS
RWM04a	12 Gauge

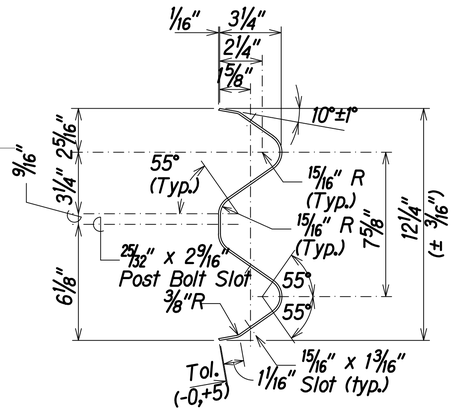

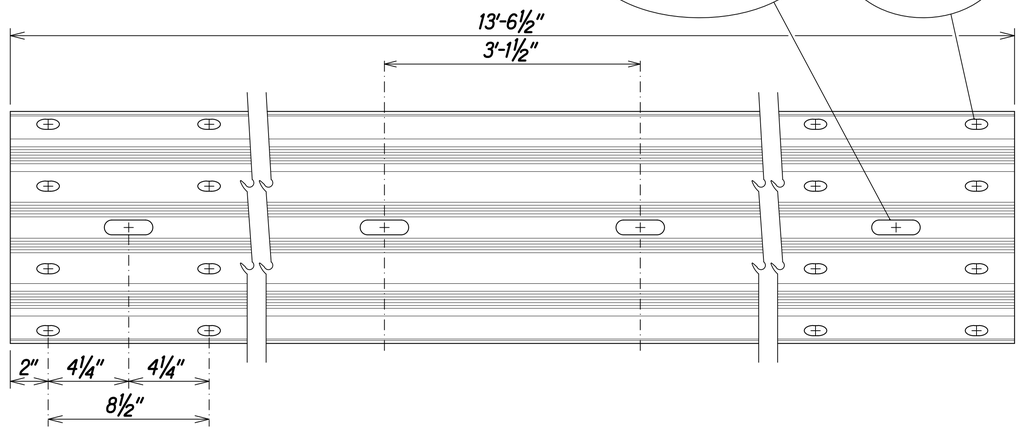

4 SPACE W-BEAM GUARDRAIL (RWM04a)

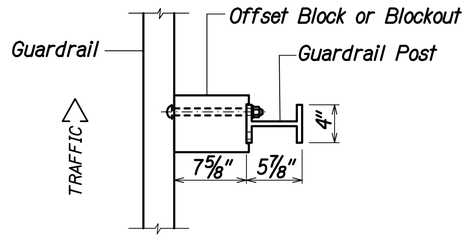

PLAN

NOTE:
All Holes are ¾" Dia.

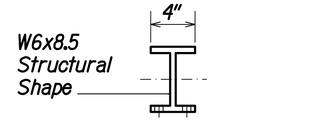

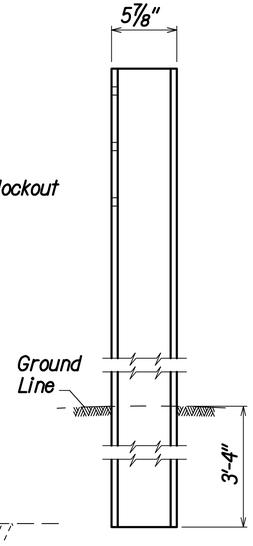

SIDE

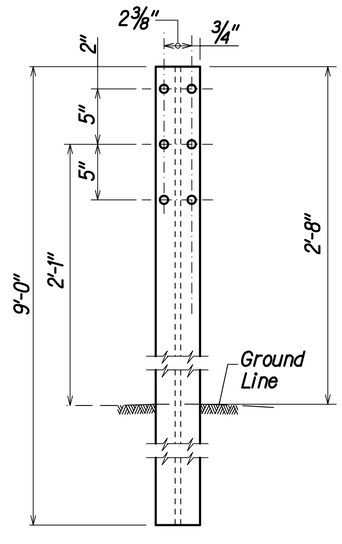

FRONT

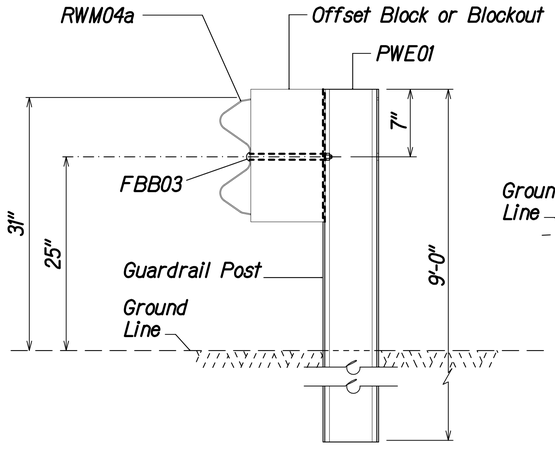

SECTION A-A

WIDE-FLANGED GUARDRAIL POST (PWE01)

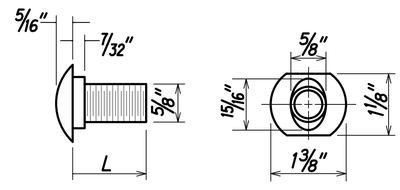

DESIGNATOR	L
FBB01	1⅜"
FBB02	2"
FBB03	10"

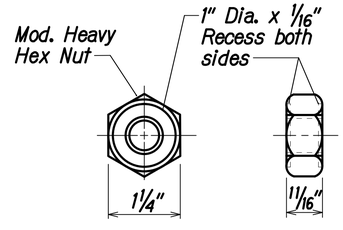

GUARDRAIL BOLTS AND RECESSED NUT

JESSICA M SAMURA
LICENSED PROFESSIONAL ENGINEER
NO. 16449-C
HAWAII, USA

LICENSE EXPIRES 4/30/28

THIS WORK WAS PREPARED BY ME OR UNDER MY SUPERVISION

ORIGINAL PLAN | NOTE BOOK | No.

SURVEY PLOTTED BY ____ DATE ____
DRAWN BY " "
TRACED BY " "
DESIGNED BY " "
QUANTITIES BY " "
CHECKED BY " "

STATE OF HAWAII
DEPARTMENT OF TRANSPORTATION
HIGHWAYS DIVISION

DETAILS

HILO BAYFRONT HIGHWAY
Intersection Improvements at Waianuenue Avenue
Federal Aid Project No. NH-019-2(076)

Scale: As Noted Date: Sep, 2026

SHEET No. 4 OF 6 SHEETS

LAST UPDATE: Aug 14, 2026 @ 0939 ym PLOT DATE: Sep 22, 2026 @ 0947 ym
PATH: F:\LEWMG\ CxEdisen\EMGCorrespAECOM\EACC2bc\EACCOMEC-AMER\SI\607484H-Hilo Bayfront Roundabout\EPproject Files\EPD CADD\ SHEET\SEI-56_Details.dwg

FED. ROAD DIST. NO.	STATE	FED. AID PROJ. NO.	FISCAL YEAR	SHEET NO.	TOTAL SHEETS
HAWAII	HAW.	NH-019-2(076)	2026	65	106

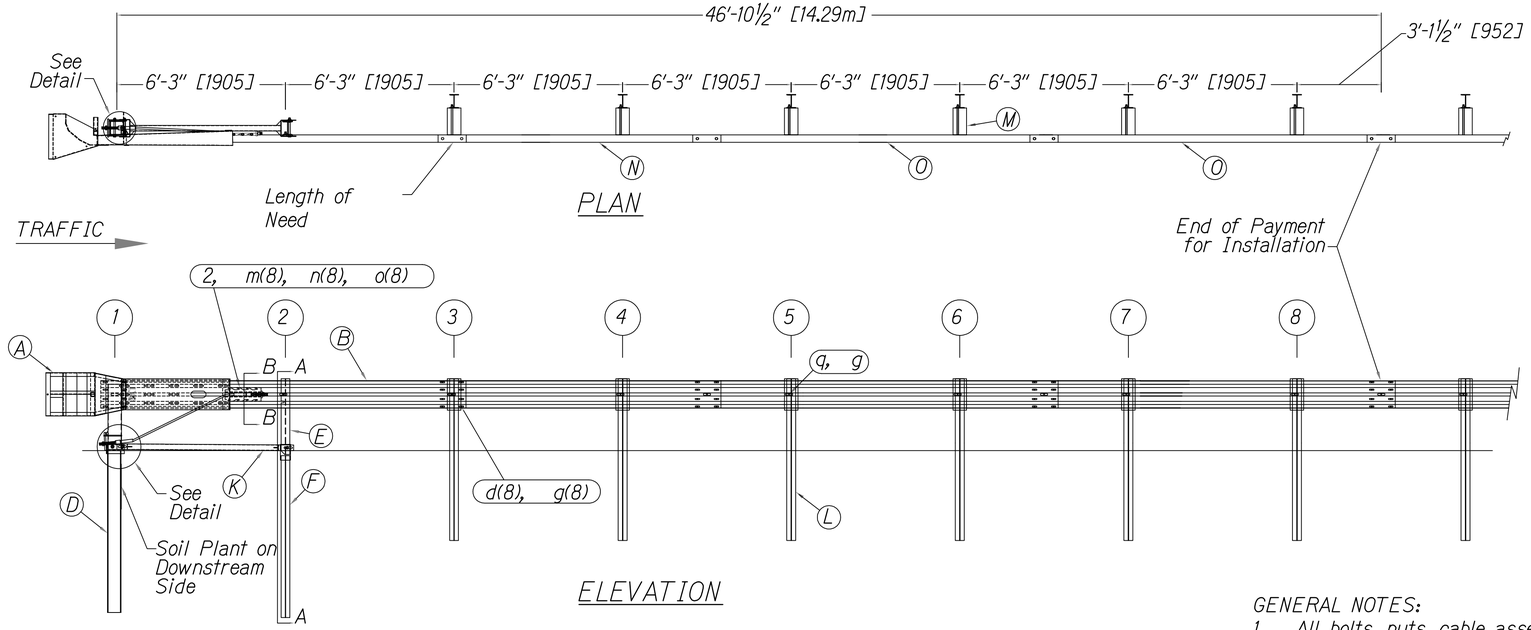

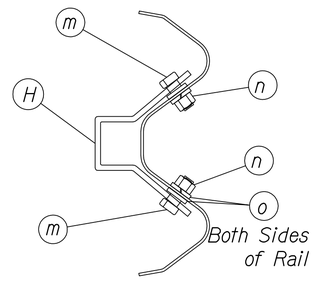

SECTION B-B
Anchor Bracket

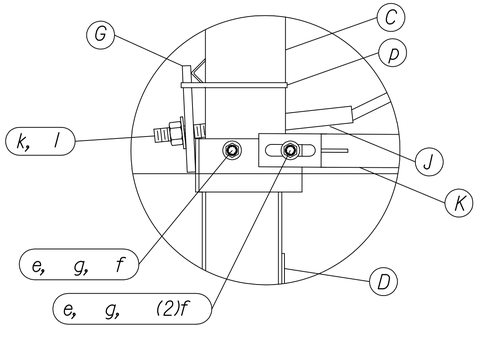

Post #1 Connection Detail

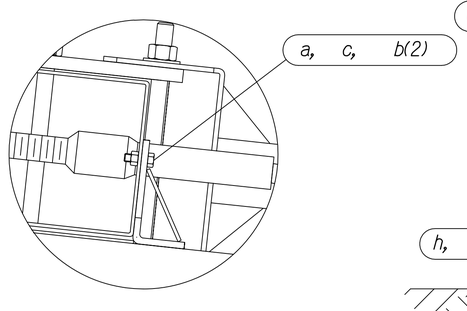

Impact Head Connection Detail

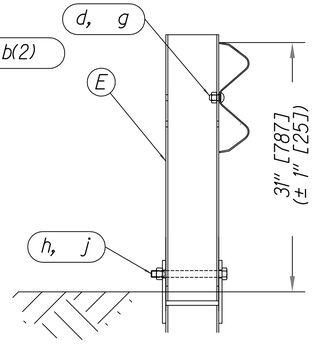

SECTION A-A
Post #2

GENERAL NOTES:

1. All bolts, nuts, cable assemblies, cable anchors and bearing plates shall be galvanized.
2. The lower sections of the Posts 1&2 shall not protrude more than 4in [100] above the ground (measured along a 5' [1.5m] cord longitudinal to the system). Site grading may be necessary to meet this requirement.
3. The lower section of the hinged post should not be driven with the upper post attached. If the post is placed in a drilled hole, the backfill material must be satisfactorily compacted to prevent settlement.
4. When competent rock is encountered, a 12" [300] Ø post hole, 20in. [500] deep cored into the rock surface may be used if approved by the engineer for Posts 1 and/or 2. Granular material will be placed in the bottom of the hole, approximately 2.5" [60] deep to provide drainage. The first and/or second post can be field cut to length, placed in the hole and backfilled with suitable backfill. The soil plate may be trimmed if required.
5. The breakaway cable assembly must be taut. A locking device (vice grips or channel lock pliers) should be used to prevent the cable from twisting when tightening nuts.

ITEM	QTY	BILL OF MATERIALS	ITEM NO.
A	1	IMPACT HEAD	MS3000
B	1	W-BEAM GUARDRAIL END SECT.12Ga.	SF1303
C	1	FIRST POST TOP (6x6x⅛" Tube)	MTPHP1A
D	1	FIRST POST BOTTOM (6' W6X15)	MTPHP1B
E	1	SECOND POST ASSEMBLY TOP	UHP2A
F	1	SECOND POST ASSEMBLY BOTTOM	HP2B
G	1	BEARING PLATE	E750
H	1	CABLE ANCHOR BOX	S760
J	1	BCT CABLE ANCHOR ASSEMBLY	E770
K	1	STRUT	MS785
L	6	6x9 (6x8.5) STEEL POST	P621
M	6	RECYCLED PLASTIC BLOCK OR EQV.	P618
N	1	W-BEAM MGS RAIL SECTION (9-4.5")	G12025
O	2	W-BEAM MGS RAIL SECTION (12'-6")	G1203A
HARDWARE (ALL DIMENSIONS IN INCHES)			
a	2	5/16 x 1 HEX BOLT GRD 5	B5160104A
b	4	5/16 WASHER	W0516
c	2	5/16 HEX NUT	N0516
d	25	5/8 Dia.x1.25 SPLICE BOLT(POST#2)	B580122
e	2	5/8 Dia. x 9 HEX BOLT A449	B580904A
f	3	5/8 WASHER	W050
g	33	5/8 Dia. H.G.R NUT	N050
h	1	3/4 Dia. x 8.5HEX BOLT GRD A449	B340854A
j	1	3/4 Dia. HEX NUT	N030
k	2	1 ANCHOR CABLE HEX NUT	N100
l	2	1 ANCHOR CABLE WASHER	W100
m	8	1/2 RSI SHOULDER BOLT W/WASHR	SB12A
n	8	1/2 STRUCTURAL NUT	N012A
o	8	1/2 STRUCTURAL WASHER	W012A
p	1	BEARING PLATE RETAINER TIE	CT-100ST
q	6	5/8" x 14" H.G.R BOLT	B581402

JESSICA M SAMURA
LICENSED PROFESSIONAL ENGINEER
NO. 16449-C
HAWAII, U.S.A.

LICENSE EXPIRES 4/30/28

THIS WORK WAS PREPARED BY ME OR UNDER MY SUPERVISION

STATE OF HAWAII
DEPARTMENT OF TRANSPORTATION
HIGHWAYS DIVISION

DETAILS

HILO BAYFRONT HIGHWAY
Intersection Improvements at Waianuenue Avenue
Federal Aid Project No. NH-019-2(076)

Scale: As Noted Date: Sep, 2026

SHEET No. 5 OF 6 SHEETS

ORIGINAL PLAN	SURVEY PLOTTED BY	DATE
	DRAWN BY	"
NOTE BOOK	TRACED BY	"
	DESIGNED BY	"
	QUANTITIES BY	
No.	CHECKED BY	

PATH/FILENAME: c:\Users\SMcCormick\AppData\Local\Temp\AcPublish_6076\Hilo Bayfront Roundabout\Project Files\B90_DADS3_SHEETS\B90-66_Details.dwg
LAST UPDATE: Aug 14, 2026 @ 03:09 pm PLOT DATE: Sep 22, 2026 @ 04:47 pm

FED. ROAD DIST. NO.	STATE	FED. AID PROJ. NO.	FISCAL YEAR	SHEET NO.	TOTAL SHEETS
HAWAII	HAW.	NH-019-2(076)	2026	66	106

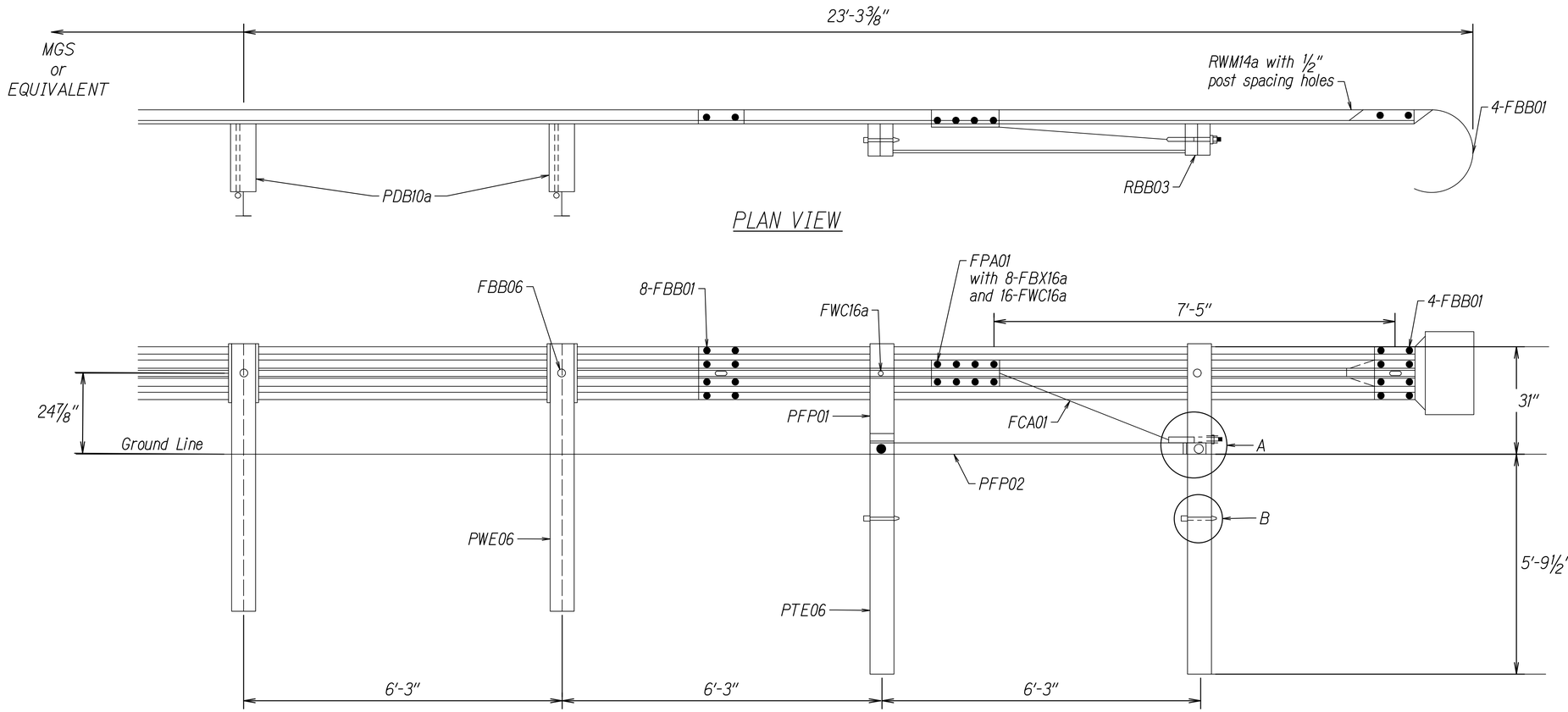

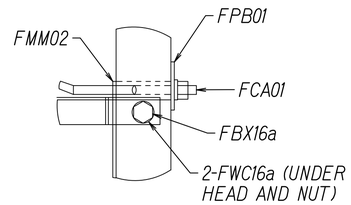

DETAIL A

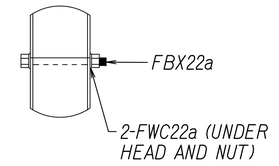

DETAIL B

ITEM NO.	QTY	COMPONENTS
FBB01	12	Guardrail Bolt and Nut
FBB03	2	Guardrail Bolt and Nut
FBB06	1	Guardrail Bolt and Nut
FBX16a	2	Hex Head Bolt (10″) and Nut
FBX16a	8	Hex Head Bolt (1½″) and Nut
FBX22a	2	Hex Head Bolt (7½″) and Nut
FCA01	1	BCT Anchor Cable Assembly
PDB10a	2	MGS Timber Blockout
PFP02	1	Strut and Yoke Assembly
PWE06	1	Wide-Flange Guardrail Post
FMM02	1	BCT Post Sleeve
FPA01	1	Anchor Bracket Assembly
FPB01	1	BCT Bearing Plate
FWC16a	22	Circular Washer
FWC22a	4	Circular Washer
PDF01	2	BCT Timber Post
PTE06	2	Foundation Tube
RWE03a	1	W-Beam Rounded End Section
RWM14a	1	W-Beam MGS End Section

ELEVATION VIEW
NON TRAFFIC SIDE

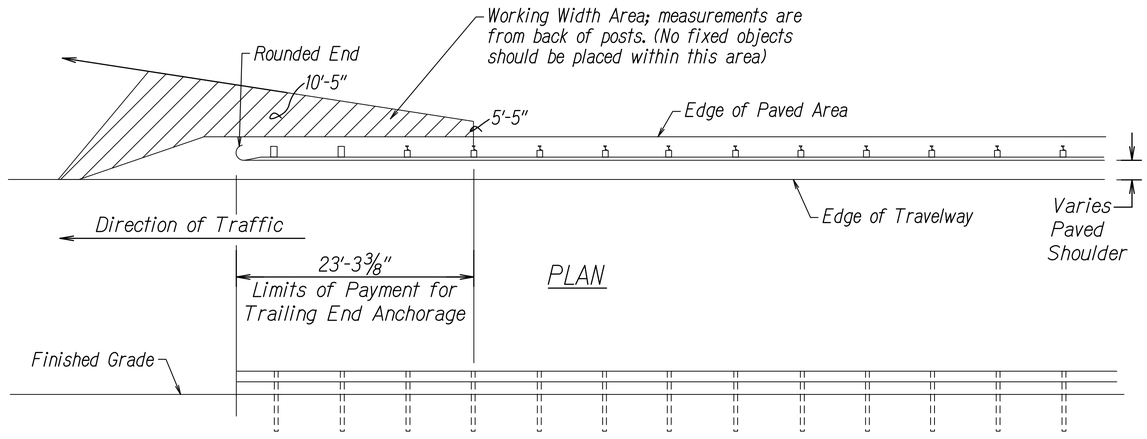

PLAN

ELEVATION

JESSICA M SAMURA
LICENSED PROFESSIONAL ENGINEER
NO. 16449-C
HAWAII, U.S.A.

LICENSE EXPIRES 4/30/28

THIS WORK WAS PREPARED BY
ME OR UNDER MY SUPERVISION

STATE OF HAWAII
DEPARTMENT OF TRANSPORTATION
HIGHWAYS DIVISION

DETAILS

HILO BAYFRONT HIGHWAY
Intersection Improvements at Waianuenue Avenue
Federal Aid Project No. NH-019-2(076)

Scale: As Noted Date: Sep, 2026

SHEET No. 6 OF 6 SHEETS

66

ORIGINAL PLAN
NOTE BOOK
SURVEY PLOTTED BY: DATE
DRAWN BY: " "
TRACED BY: " "
DESIGNED BY: " "
QUANTITIES BY: " "
CHECKED BY: " "
No.

LAST UPDATE: Aug 14, 2026 @ 0259 pm PLOT DATE: Sep 22, 2026 @ 0648 pm
PATH:FILENAME: C:\Users\MaCormick\AEDC\ACCDocs\EAECOM\EI-AMERUS\6thMHH-Hilo Bayfront Roundabout\Project Files\800 CADD\20 SHEETS\80-66_Details.dwg

FED. ROAD DIST. NO.	STATE	FED. AID PROJ. NO.	FISCAL YEAR	SHEET NO.	TOTAL SHEETS
HAWAII	HAW.	NH-019-2(076)	2026	67	106

STRUCTURAL GENERAL NOTES:

General:

A. Workmanship and materials shall conform to the following design specifications:
   1. AASHTO LRFD Bridge Design Specifications, 9th Edition, 2020 including all interim revisions.
   2. State of Hawaii, Department of Transportation, Highways Division, Design Criteria for Bridges and Structures, August 8, 2014 as amended by HWY-DB 2.5098, Changes to Design Criteria for Bridges and Structures, January 8, 2018.
   3. AASHTO LRFD Specifications for Structural Supports for Highway Signs, Luminaires and Traffic Signals, 1st Edition, 2016 including all interim revisions.
   4. AASHTO Manual for Assessing Safety Hardware, 2nd Edition, 2016.
   5. Hawaii Standard Specifications for Road and Bridge Construction (2005 Edition) and Special Provisions.

B. The contractor shall compare all the contract documents with each other and report in writing to the engineer all inconsistencies and omissions.

C. The contractor shall take field measurements and verify field conditions and shall compare such field measurements and conditions with the drawings before commencing work. Report in writing to the engineer all inconsistencies and omissions.

D. The contractor shall be responsible for coordinating the work of all trades.

E. The contractor shall be responsible for means and methods of construction, workmanship and job safety.

F. The contractor shall provide temporary shoring and bracing as required for stability of structural members and systems.

G. Construction loading shall not exceed design live load unless special shoring is provided. Permitted construction loads shall be properly reduced in areas where the structure has not attained full design strength.

H. The contractor shall be responsible for protection of the adjacent properties, structures, streets and utilities during the construction period. Any damaged or deteriorated property shall be restored to the condition prior to the beginning of work or better at no cost to the State.

I. Details noted as typical on the structural drawings shall apply in all conditions unless specifically shown or noted otherwise.

J. Except as noted otherwise, all vertical dimensions are measured plumb.

Design Criteria:

A. Dead load
   - Weight of all components of the structures, appurtenances attached thereto, and earth covers.
   - Unit weight of concrete ---------- 160 pcf
   - Compacted earth ---------- 120 pcf

B. Live load
   - Vehicle ---------- AASHTO HL-93
   - Pedestrian (sidewalk)---------- 75 psf

C. Collision load ---------- AASHTO TL-3

D. Seismic
   - Peak seismic ground acceleration coefficient, A_s ---------- 0.602g
   - Site class ---------- C
   - Seismic design zone ---------- 2

E. Basic wind speed ---------- 145 MPH

F. Design soil parameters for structures
   - Bearing capacity
      - Extreme event limit state ---------- 5,500 psf
      - Strength limit state ---------- 2,500 psf
   - Passive earth pressure
      - Extreme event limit state ---------- 350 pcf
      - Strength limit state ---------- 175 pcf
   - Lateral earth pressure
      - Active (level backfill) ---------- 40 pcf
      - At-rest (level backfill) ---------- 60 pcf
   - Dynamic lateral earth pressure
      - Unrestrained ---------- $14.3H^2$ psf
      - Restrained ---------- $48.4H^2$ psf
   - Coefficient of Friction
      - Extreme event limit state ---------- 0.58
      - Strength limit state ---------- 0.46

Foundation:

A. Foundation design is based upon Geotechnical Technical Memorandum by Geolabs Inc., dated June 5, 2026, and, for drill shaft construction, Geotechnical Memorandum by Geolabs inc dated June 16, 2026.

B. Contractor shall provide for de-watering of excavation from either surface water, ground water or seepage. NPDES permit required for discharging into state waters.

C. Contractor shall provide for design and installation of all cribbing, sheeting, and shoring necessary for personnel safety and to preserve excavations and earth banks, and adjacent structures and property for damage for owner review. Design shall be by a civil engineer specializing in geotechnical engineering and a structural engineer both shall be licensed in the State of Hawaii. Submit stamped drawing and calculations to the Engineer. Shoring shall comply with HIOSH and OSHA regulations. Excavation boundaries and grade elevations for footing shall be accepted by a geotechnical engineer licensed in the State of Hawaii prior to placing the concrete and reinforcing.

D. Bottom of footing shall be compacted to provide a relatively firm and smooth bearing surface prior to placement of reinforcing steel and concrete. Prepare footing subgrade by compacting to a minimum of 90% relative compaction in accordance with ASTM D1557. If soft and/or loose materials are encountered at the bottom of excavations, they shall be over-excavated at least 24 inches to exposed the underlying firm materials. The over-excavation should also extend a minimum of 24 inches laterally beyond the edge of the footing. Where the cobbles/boulders are encountered within the footing subgrade, over-excavating the footing subgrade at least 12 inches. The over-excavated area shall be backfilled with aggregate base course.

E. Backfill shall be Structural Backfill Material A in accordance with Section 703.20 of the Hawaii Standard Specifications for Road and Bridge Construction, 2005 Edition.

F. Excavations for foundations shall be monitored and approved by Geolabs prior to placement of concrete and reinforcing steel to conform foundation bearing conditions and required embedment depths.

Concrete:

A. Concrete shall be regular weight hard rock concrete and shall have a minimum 28-day compressive strength of 5,000 psi and a maximum water to cement ratio of 0.45.

B. The use of any calcium chloride in any concrete is prohibited.

C. Concrete delivery tickets shall record all free water in the mix at batching plant, added for consistency by driver, and any additional request by contractor up to the maximum amount allowed by the mix design.

D. Conduits, pipes, and sleeves passing through a wall not conforming to typical details shall be located and submitted to the structural engineer for approval.

E. Construction joints may be requested to be relocated by the contractor and submit request to its structural engineer for approval. Submit stamped and signed drawings and calculations to the Engineer for acceptance. Construction joints shall be made and relocated as not to impair the durability, strength of the structure and to minimize shrinkage stresses. All construction joints shall be cleaned, laitance removed and wetted. See typical details for specific requirements.

F. Unless otherwise noted, chamfer all exposed concrete edges 3/4".

G. Reinforcing bars, anchor bolts, inserts and other items to be cast in the concrete shall be secured in position prior to placement of concrete.

H. All inserts, anchor bolts, plates, and other structural items to be cast in the concrete shall be hot-dip galvanized according to ASTM A153 unless otherwise noted.

I. Non-shrink grout shall be a premixed non-metallic formula, capable of developing a minimum compressive strength of 4,000 psi in 1 day and 7,000 psi in 28 days.

J. A shrinkage reducing admixture (SRA), Tetraguard AS20 by BASF, Eclipse by W.R. Grace & Co, or an approved equal shall be added to the concrete. The minimum dosage requirement shall be 128 oz per cubic yard of concrete.

K. A corrosion inhibiting admixture shall be included in the concrete mix for all concrete. The corrosion inhibiting admixture shall contain a minimum of 30% calcium nitrate by mass and shall be added at a dosage rate of 4.0 gallons per cubic yard of concrete or as recommended by the manufacturer. The admixture shall be Masterlife CI 30 Calcium Nitrate-Based corrosion inhibitor, DCI S corrosion inhibitor or an approved equal. Addition of corrosion inhibiting admixture shall be as recommended by the manufacturer.

L. Stay-in-place forms shall not be allowed.

BRYAN LUM
LICENSED PROFESSIONAL ENGINEER
No. 14345-S
HAWAII, U.S.A.

LICENSE EXPIRES 4/30/28

THIS WORK WAS PREPARED BY ME OR UNDER MY SUPERVISION

STATE OF HAWAII
DEPARTMENT OF TRANSPORTATION
HIGHWAYS DIVISION

STRUCTURAL GENERAL NOTES

HILO BAYFRONT HIGHWAY

Intersection Improvements at Waianuenue Avenue

Federal Aid Project No. NH-019-2(076)

Scale: As Noted Date: Sept, 2026

SHEET No. 1 OF 5 SHEETS

67

ORIGINAL PLAN
NOTE BOOK
No.
SURVEY PLOTTED BY DATE
DRAWN BY
TRACED BY
DESIGNED BY
QUANTITIES BY
CHECKED BY

LAST UPDATE: Sep 22, 2026 @ 03:49 pm PLOT DATE: Sep 22, 2026 @ 04:21 pm

PATH/FILENAME: P:\STP-0705(076) 20TH\Hilo Bayfront Hwy-Intersection Improv at Kalakaua Ave\B200_Drawings\Structural\AutoCAD_Format\B200-09-126R16_SS-102.dwg

FED. ROAD DIST. NO.	STATE	FED. AID PROJ. NO.	FISCAL YEAR	SHEET NO.	TOTAL SHEETS
HAWAII	HAW.	NH-019-2(076)	2026	68	106

STRUCTURAL GENERAL NOTES:

Reinforcing Steel:

A. Deformed and Plain Carbon Steel Bars for Concrete Reinforcement shall meet the requirements of AASHTO M31M/M31-19, Grade 60 (ASTM A615/ A615M-16, Grade 60).
B. Deformed and Plain Carbon Steel Bars for Concrete Reinforcement to be spliced by welding or otherwise welded, such as welded hoops, or for seismic reinforcing shall meet the requirements of AASHTO M31M/M31-19, Grade 60 (ASTM A615/ A615M-16, Grade 60) and meet the requirements of ASTM A706/A706M-16.
C. The welding of reinforcing steel shall be in accordance with the Structural Welding Code-Reinforcing Steel AWS D1.4.
D. Epoxy-coated dowels and deformed bars shall conform to ASTM A775, Grade 60 unless otherwise noted.
E. The contractor shall not damage the epoxy coating on the dowels and deformed bars in any way during shipment, handling, or placement. Damaged epoxy coated dowels and deformed bars shall be replaced at no cost to the State. Repair of epoxy coating as approved by the Engineer shall meet ASTM A775.
F. Clear concrete cover for reinforcing bars shall be 3', unless otherwise noted, measured to the closest part of the bars.
G. At the time concrete is placed, reinforcing shall be free from mud, oil, laitance or other coatings which may adversely affect bond strength.
H. Minimum clear spacing between parallel bars shall be one and one-half (1½) times the diameter of the larger bar (for non-bundled bars), but in no case shall the clear distance between the bars be less than one and one-half (1½) times the maximum coarse aggregate size.
I. All dimensions relating to reinforcing bars (e.g. spacing of bars etc.) are to centers of bars unless noted otherwise.
J. Except for longitudinal bars, reinforcing steel shall be spliced only where indicated on plans. Provide lap splice length per typical details and schedule, unless otherwise noted.
K. Mechanical splice connectors shall develop, in tension, 125 percent of the specified minimum yield strength of reinforcing bars.
L. Bar bends and hook shall be "standard hooks" in accordance with typical details.
M. Minimum reinforcement bend diameters shall comply with AASHTO 5.10.2.3.

Miscellaneous Materials:

A. Preformed Expansion Joint Filler for Concrete (Bituminous Type) shall conform to AASHTO M33-99 (2012), ASTM D994-11 (2016).

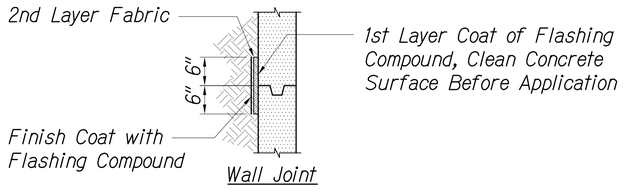

Wall Joint

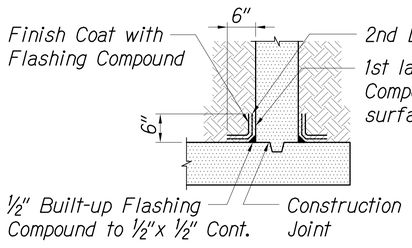

Wall to Foundation Joint

Note:
Typical each face unless noted otherwise.

TYPICAL WATERPROOFING DETAIL — 1 / S0.2 | S0.2
Not to Scale

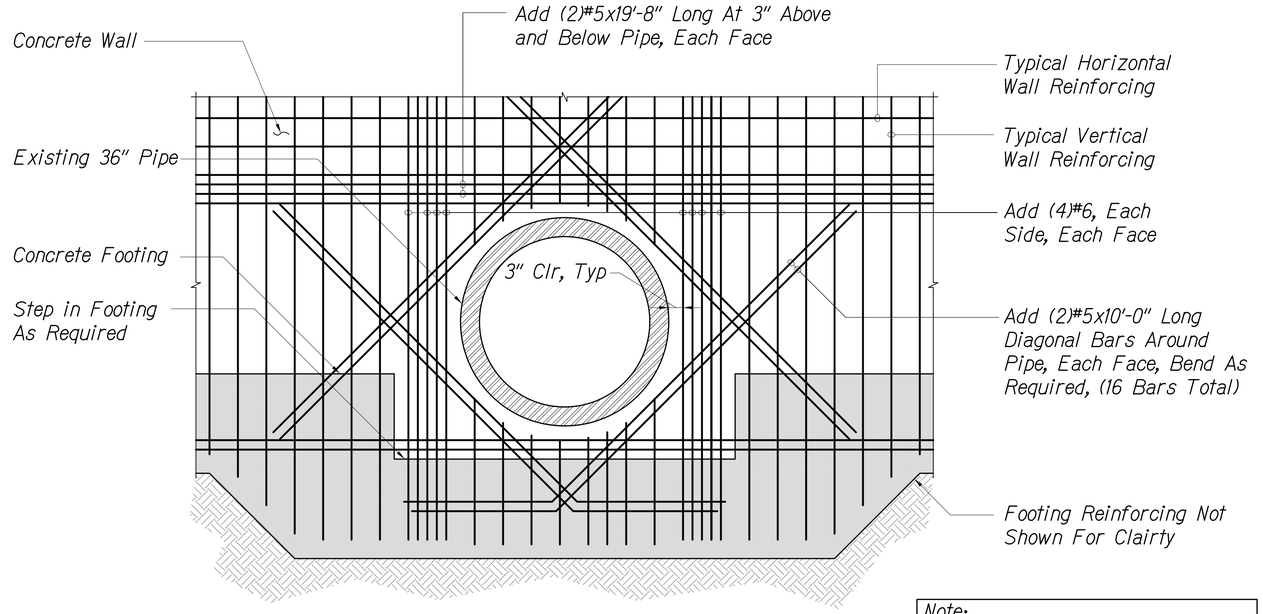

Note:
See Civil Dwgs for Wall and Pipe Elevations and Locations.

PIPE PENETRATION DETAIL — 2 / S0.2 | S0.2
Not to Scale

BRYAN LUM
LICENSED PROFESSIONAL ENGINEER
No. 14345-S
HAWAII, U.S.A.

LICENSE EXPIRES 4/30/28

THIS WORK WAS PREPARED BY ME OR UNDER MY SUPERVISION

STATE OF HAWAII
DEPARTMENT OF TRANSPORTATION
HIGHWAYS DIVISION

STRUCTURAL GENERAL NOTES AND TYPICAL DETAILS

HILO BAYFRONT HIGHWAY
Intersection Improvements at Waianuenue Avenue
Federal Aid Project No. NH-019-2(076)

Scale: As Noted Date: Sept, 2026

SHEET No. 2 OF 5 SHEETS

ORIGINAL PLAN | NOTE BOOK No. | SURVEY PLOTTED BY | DRAWN BY | TRACED BY | DESIGNED BY | QUANTITIES BY | CHECKED BY | DATE

LAST UPDATE: Sep 22, 2026 @ 03:49 pm PLOT DATE: Sep 22, 2026 @ 04:21 pm
PATH/FILENAME: P:\$STOTs-0705\$0749 DOT\Hilo Bayfront Hwy Intersection Improv at Kamehameha Ave\$050 Drawings\$Structural\$AutoCAD_Format\$2026-09-22\$0749_S01-02.dwg

FED. ROAD DIST. NO.	STATE	FED. AID PROJ. NO.	FISCAL YEAR	SHEET NO.	TOTAL SHEETS
HAWAII	HAW.	NH-019-2(076)	2026	69	106

MINIMUM SPLICE & EMBEDMENT LENGTHS

Bar Size	Lap Splice		Embedment		
			Straight		with Standard 90° Hook
	Top Bars	Other Bars	Top Bars	Other Bars	
#3, #4	30"	23"	23"	18"	10"
#5	37"	29"	29"	22"	12"
#6	44"	34"	34"	26"	14"
#7	56"	43"	43"	34"	16"
#8	74"	57"	57"	44"	19"
#9	93"	72"	72"	55"	21"

Notes:
1. "Top Bars" are horizontal bars with 12" or more of concrete cast below.
2. Splice lengths may be reduced by multiplying the tabulated values by 0.765 if the centerline of splice of adjacent bars are staggered 6'-0" o.c. for #9 bars and smaller.
3. Embedment lengths for straight bars may be reduced by multiplying the tabulated values by 0.80 if the bars are spaced laterally not less than 6" center-to-center, with not less than 3" clear cover measured in the direction of the spacing.
4. Embedment lengths for bars with 90° hook are bars with side cover, normal to plane of hook, of not less than 2½" and cover on bar extension beyond hook not less than 2". Increase embedment length by 43% for bars not meeting these requirements.

TYPICAL REBAR SPLICE AND EMBEDMENT LENGTH SCHEDULE

Not to Scale

1 | S0.3 | S0.3

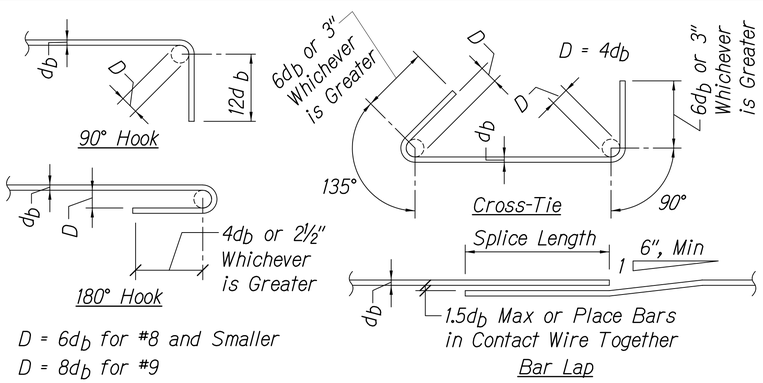

STANDARD HOOKS AND CROSS-TIE DETAIL

Not to Scale

2 | S0.3 | S0.3

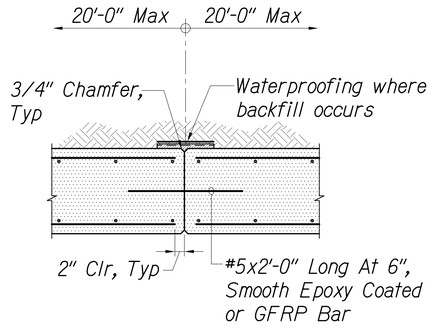

Concrete Wall Control Joint (Plan View)

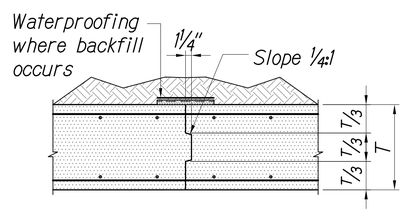

Concrete Wall Construction Joint (Plan View)

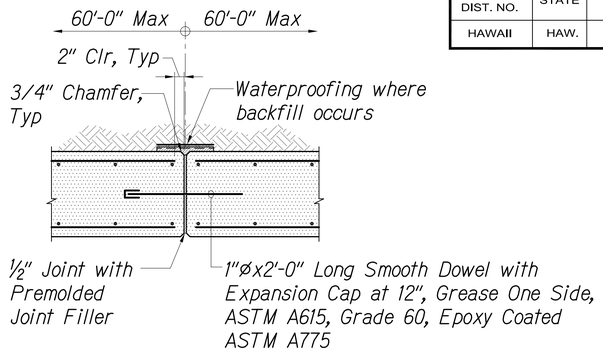

Concrete Wall Expansion Joint (Plan View)

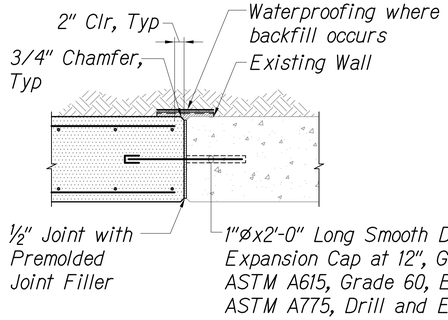

Concrete Wall To Existing Wall Expansion Joint (Plan View)

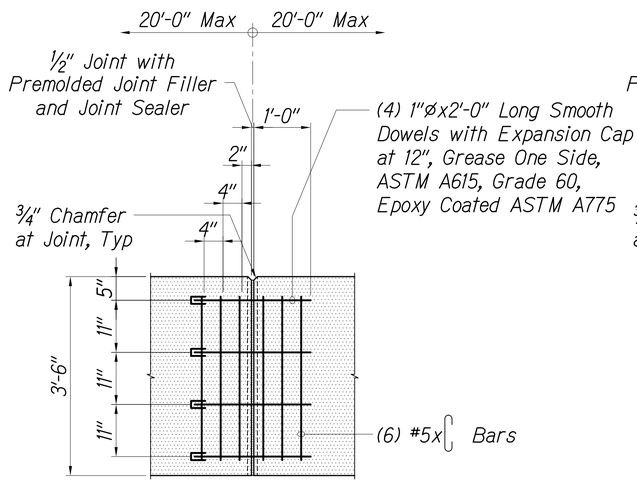

Concrete Barrier Wall Expansion Joint (Elevation view)

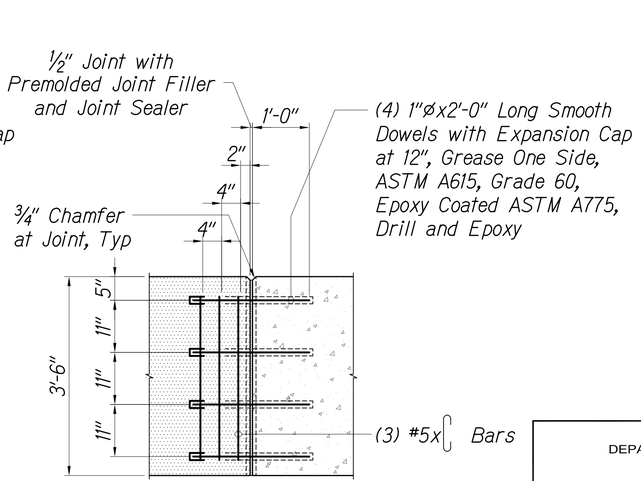

Concrete Barrier Wall To Existing Wall Expansion Joint (Elevation view)

TYPICAL JOINT DETAILS

Not to Scale

3 | S0.3 | S0.3

BRYAN LUM
LICENSED PROFESSIONAL ENGINEER
No. 14345-S
HAWAII, U.S.A.

LICENSE EXPIRES 4/30/28

THIS WORK WAS PREPARED BY ME OR UNDER MY SUPERVISION

STATE OF HAWAII
DEPARTMENT OF TRANSPORTATION
HIGHWAYS DIVISION

TYPICAL DETAILS

HILO BAYFRONT HIGHWAY
Intersection Improvements at Waianuenue Avenue
Federal Aid Project No. NH-019-2(076)

Scale: As Noted Date: Sept, 2026

SHEET No. 3 OF 5 SHEETS

ORIGINAL PLAN	SURVEY PLOTTED BY	DATE
NOTE BOOK	DRAWN BY	
	TRACED BY	
	DESIGNED BY	
	QUANTITIES BY	
No.	CHECKED BY	

LAST UPDATE: Sep 22, 2026 @ 03:49 pm PLOT DATE: Sep 22, 2026 @ 04:21 pm
PATH/FILENAME: P:\ED\70-0705\EPIC DOT\Hilo Bayfront Hwy Intersection Improv at Kaiwaenuenue Ave\ED50 Drawings\Structure\BaAnCAD_Format\ED50-09-126\PKG_S0.102.dwg

FED. ROAD DIST. NO.	STATE	FED. AID PROJ. NO.	FISCAL YEAR	SHEET NO.	TOTAL SHEETS
HAWAII	HAW.	NH-019-2(076)	2026	70	106

Retaining Wall Schedule		
Height "H"	"W"	"A"
≤10'-0"	17'-0"	2'-0"
≤8'-0"	16'-0"	1'-0"
≤6'-0"	12'-0"	1'-0"

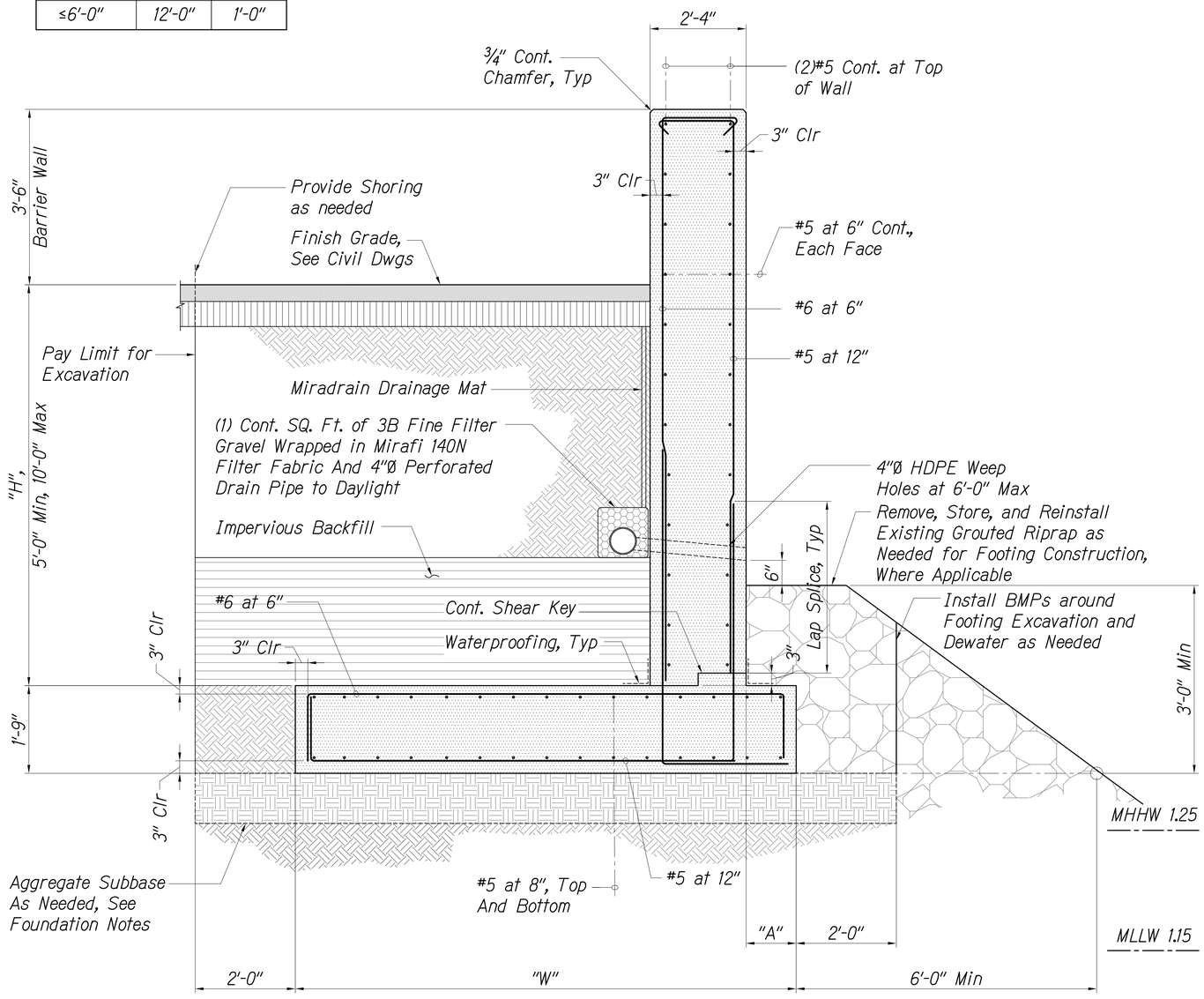

RETAINING WALL SCHEDULE — 1 (S1.1 | S1.1)

Scale: 3/4" = 1'-0"



Plan

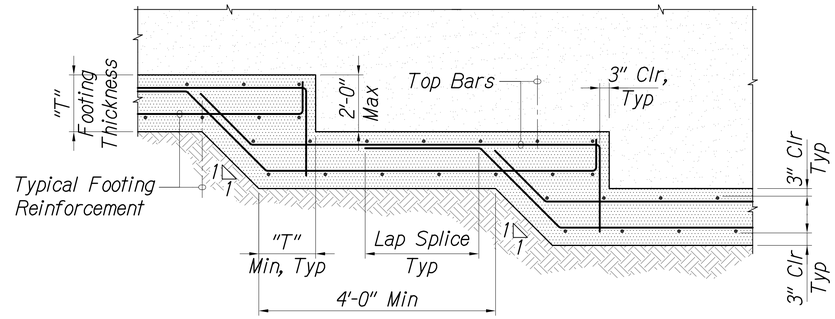

Elevation

TYPICAL STEP FOOTING DETAIL — 2 (S1.1 | S1.1)

Not To Scale

LICENSED PROFESSIONAL ENGINEER
BRYAN LUM
No. 14345-S
HAWAII, U.S.A.

LICENSE EXPIRES 4/30/28

THIS WORK WAS PREPARED BY ME OR UNDER MY SUPERVISION

STATE OF HAWAII
DEPARTMENT OF TRANSPORTATION
HIGHWAYS DIVISION

RETAINING WALL SCHEDULE AND SECTION

HILO BAYFRONT HIGHWAY

Intersection Improvements at Waianuenue Avenue

Federal Aid Project No. NH-019-2(076)

Scale: As Noted Date: Sept, 2026

SHEET No. 4 OF 5 SHEETS

ORIGINAL PLAN | NOTE BOOK No.

SURVEY PLOTTED BY DATE
DRAWN BY
TRACED BY
DESIGNED BY
QUANTITIES BY
CHECKED BY

LAST UPDATE: Sep 22, 2026 @ 03:49 pm PLOT DATE: Sep 22, 2026 @ 04:21 pm

PATH/FILENAME: P:\STOTS-0705\ER76 007\HHBs Bayfront Hwy-Intersection Improv at Kaiwahaneha Ave\650 Drawings\Structural\AutoCAD_Format\2026-09-22\ER76_S01-02.dwg

FED. ROAD DIST. NO.	STATE	FED. AID PROJ. NO.	FISCAL YEAR	SHEET NO.	TOTAL SHEETS
HAWAII	HAW.	NH-019-2(076)	2026	71	106

Note:
Contractor to ensure no dissimilar metal contact between drilled shaft reinforcing and light pole anchor bolts.

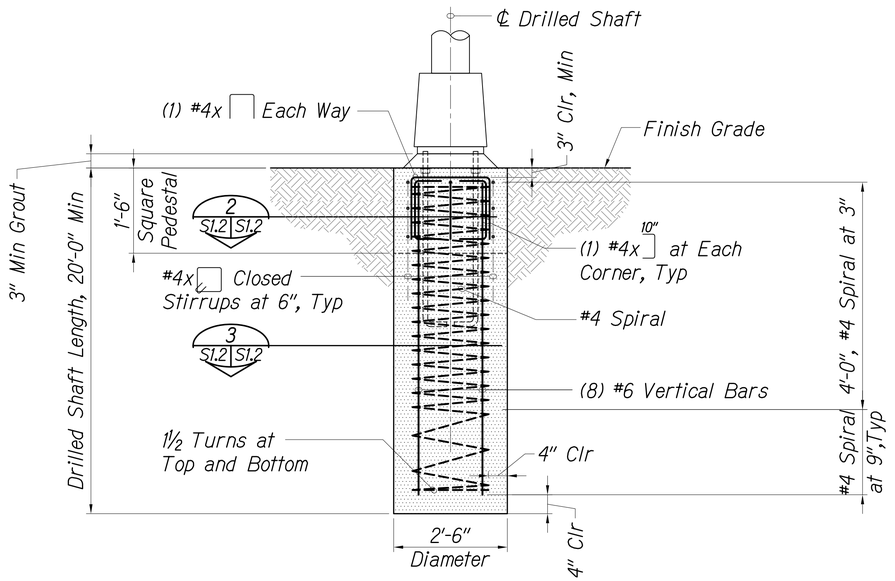

TYPICAL STREET LIGHT POLE FOUNDATION 1
Not To Scale — S1.2 | S1.2

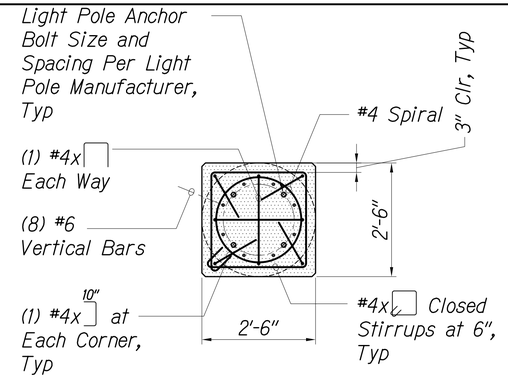

SECTION 2
Not To Scale — S1.2 | S1.2

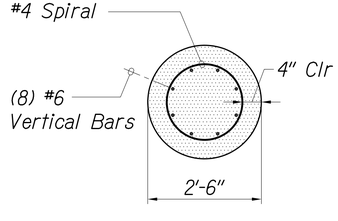

SECTION 3
Not To Scale — S1.2 | S1.2

ORIGINAL PLAN	SURVEY PLOTTED BY	DATE
NOTE BOOK	DRAWN BY	
No.	TRACED BY	
	DESIGNED BY	
	QUANTITIES BY	
	CHECKED BY	

LAST UPDATE: Sep 22, 2025 ● 03:49 pm PLOT DATE: Sep 22, 2025 ● 04:21 pm

PATH:\TITLENAME: P:\BEFH-0752\BEFH DOT\Hilo Bayfront Hwy-Intersection Improv at Kaiwiahenia Ave\8200 Drawings\Structural\AutoCAD_Format\8200-09-22\BEFH_S01-02.dwg

BRYAN LUM
LICENSED PROFESSIONAL ENGINEER
No. 14345-S
HAWAII, U.S.A.

LICENSE EXPIRES 4/30/28

THIS WORK WAS PREPARED BY ME OR UNDER MY SUPERVISION

STATE OF HAWAII
DEPARTMENT OF TRANSPORTATION
HIGHWAYS DIVISION

DRILLED SHAFT FOUNDATION DETAILS

HILO BAYFRONT HIGHWAY
Intersection Improvements at Waianuenue Avenue
Federal Aid Project No. NH-019-2(076)

Scale: As Noted Date: Sept, 2026

SHEET No. 5 OF 5 SHEETS

EXTERIOR ELECTRICAL SYMBOLS

SYMBOL	DESCRIPTION
	ELECTRICAL HANDHOLE, SIZE AS INDICATED
	TELECOM HANDHOLE, SIZE AS INDICATED
	CATV HANDHOLE, SIZE AS INDICATED
	TELECOM MANHOLE, SIZE AS INDICATED
	HECO MANHOLE
	STREET LIGHT "TYPE A" PULLBOX
	STREET LIGHT "TYPE B" PULLBOX
	STREET LIGHT "TYPE C" PULLBOX
	"TYPE A" STATE HIGHWAY CCTV PULLBOX
	"TYPE B" STATE HIGHWAY CCTV PULLBOX
	"TYPE C" STATE HIGHWAY CCTV PULLBOX
	CCTV METERING EQUIPMENT, DETAIL Z/ZZ
C	CCTV CABIENT, SEE DETAIL Z/ZZ
HWY	HIGHWAY LIGHTING CABINET, SEE DETAIL Z/ZZ
	85W LED STREET LIGHT, BRACKET ARM LENGTH AS NOTED ON PLAN SEE DETAIL Z/ZZ
	100W LED STREET LIGHT, BRACKET ARM LENGTH AS NOTED ON PLAN SEE DETAIL Z/ZZ
C→	POLE FOR CCTV CAMERA
	CONDUIT WITH WIRES, CONCEALED BELOW FINISH FLOOR OR GRADE, ALL OTHER SIMILARS, 1"C MINIMUM
OH/E	OVERHEAD ELECTRICAL (E), TELECOM (T)
eE	EXISTING ELECTRICAL
	UTILITY POLE / UTILITY POLE WITH RISER / UTILITY POLE WITH TRANSFORMER
	GUY WIRE
	TRAFFIC SIGNAL
	STREET LIGHT LUMINAIRE - BRACKET ON UTILITY POLE
⊗	STAINLESS STEEL EQUIPMENT SUPPORT
⊙	STANCHION
2-2E A	DUCT SECTION TYPE "A" DUCT WITH 2 - 2" ELECTRICAL DUCTS INDICATED, ALL OTHERS SIMILAR, SEE DUCT SECTION DETAILS
← 1 , 1	NOTE INDICATOR, NOTE NUMBER 1 REFERENCED, ALL OTHER SIMILAR, SEE NOTES ON RESPECTIVE SHEETS
x	ITEMS WITH "X" THROUGH SYMBOL, INDICATES REMOVAL/DEMOLITION OF THAT ITEM

SYMBOL NOTES:

1. All items shall be new unless otherwise noted.
2. Existing items indicated as dashed, existing circuiting indicated with an "e".
3. "X" thru symbol denotes existing item to be demolished / removed or as noted.

GENERAL NOTES:

1. Visit site and become familiar with existing conditions , and extent of demolition and new work prior to start of work. Resolve all discrepancies and questions prior to start of work.
2. Minimize all outages. Schedule and obtain approvals, for all outages with the State, County of Hawaii, HELCO, Hawaiian Telcom, and Spectrum. Work may be required during non-business hours to minimize disruptions during outages.
3. Patch, grout, and paint all openings exposed by removal work. The new patch, grout, and paint shall match the texture and color of the existing surface.
4. Saw-cut, trench, core-drill, patch, and paint existing floors, ceiling, walls, AC pavement as necessary. Provide fireproofing seals (fire stops) at all conduit penetrations to maintain existing fire rating integrity of floors, ceilings and walls.
5. All work shall conform to the latest adopted building codes of the State of Hawaii.
6. Test all electrical equipment and systems, and demonstrate system operation to the satisfaction of the State.
7. Provide shop drawings for approval by the State.
8. Provide As-Built drawings after completion of the project.
9. Maintain electrical connection (power, lighting and signal) to unaffected areas.
10. Provide dedicated neutrals for all circuits.
11. Coordinate with HELCO, Hawaiian Telcom, and Spectrum for any questions related to electrical equipment installation for their systems.

GENERAL DEMOLITION NOTES:

1. Field verify existing installations and modify as necessary to complete all work to the design intent of drawings and specifications at no additional cost to the State.
2. Remove all unused and abandoned telecom cables and power conductors. Coordinate with each respective utility company.
3. Verify all existing circuiting. Make sure all circuits are de-energized before proceeding with demolition work.

ELECTRICAL AND TELECOM UTILITY CONSTRUCTION PHASING NOTES:

1. All HELCO, Spectrum and Hawaiian Telcom scope of work shall be completed during Phase 1 of construction.
2. All utility outages must be approved by and scheduled with respective utility company. Provide minimum 30 days advance notice of proposed outage dates.

FED. ROAD DIST. NO.	STATE	FED. AID PROJ. NO.	FISCAL YEAR	SHEET NO.	TOTAL SHEETS
HAWAII	HAW.	NH-019-2(076)	2026	72	106

ABBREVIATIONS LIST:

A	Ampere(s)
AFF	Above finished floor
AFG	Above finished ground
BTM	Bottom
CKT	Circuit
CTR	Center
EM	Emergency
EXST	Existing
HPF	High Power Factor
L	Long
MIN	Minimum
MTD	Mounted
MTG	Mounting
OC	Overcurrent
PNL	Panel
REQD	Required
SW	Switch
TYP	Typical
UON	Unless otherwise noted
V	Volt(s)
W	Watt(s)
XFMR	Transformer

RONALD N. S. HO & ASSOC., INC.
Electrical Engineers

JENSON J. SANTOS
LICENSED PROFESSIONAL ENGINEER
No. 14286-E
HAWAII, U. S. A.

THIS WORK WAS PREPARED BY ME OR UNDER MY SUPERVISION AND CONSTRUCTION OF THIS PROJECT WILL BE UNDER MY OBSERVATION AS DEFINED IN HAR TITLE 16, CHAPTER 115, RULES OF THE BOARD OF PROFESSIONAL ENGINEERS, ARCHITECTS AND SURVEYORS. STATE OF HAWAII

APRIL 30, 2028
LIC. EXP. DATE

STATE OF HAWAII
DEPARTMENT OF TRANSPORTATION
HIGHWAYS DIVISION

ELECTRICAL NOTES & SYMBOLS

HILO BAYFRONT HIGHWAY
Intersection Improvements at Waianuenue Avenue
Federal Aid Project No. NH-019-2(076)

Scale: As Noted Date: Sept. 2026

SHEET No. 1 OF 25 SHEETS

ORIGINAL PLAN
NOTE BOOK
SURVEY PLOTTED BY
DRAWN BY CAD
TRACED BY MP
DESIGNED BY
QUANTITIES BY
CHECKED BY JS
DATE
No.

Z:\ACAD\PROJECTS\225076\E72_Elec_Symbols_Notes_225076.dwg 09/22/26 - 11:48am MPetner

FED. ROAD DIST. NO.	STATE	FED. AID PROJ. NO.	FISCAL YEAR	SHEET NO.	TOTAL SHEETS
HAWAII	HAW.	NH-019-2(076)	2026	73	106

HAWAII ELECTRIC LIGHT COMPANY (HELCO) NOTES

1. Location of HELCO Facilities

The location of HELCO's overhead and underground facilities shown on the plans are from existing records with varying degrees of accuracy and are not guaranteed as shown. The contractor shall verify in the field the locations of the facilities and shall exercise proper care in excavating and working in the area. Wherever connections of new utilities to existing utilities and utility crossings are shown, the contractor shall expose the existing lines at the proposed connections and crossing to verify the depths prior to excavation for the new lines. The contractor shall be responsible for any damages to HELCO's facilities whether shown or not shown on the plans.

2. Compliance with Hawaii Occupational Safety and Health Laws

The contractor shall comply with the State of Hawaii's occupational safety and health laws and regulations, including without limitation, those related to working on or near exposed or energized electrical lines and equipment.

3. Excavation Permit

The contractor shall obtain an excavation permit from the County of Hawai'i two weeks prior to starting construction. Please refer to our request number at that time.

4. CAUTION!!! ELECTRICAL HAZARD!!!

Existing HELCO overhead and underground lines are energized and will remain energized during construction unless prior special arrangements have been made with HELCO. Only HELCO personnel are to handle these energized lines and erect temporary guards to protect these lines from damage. The contractor shall work cautiously at all times to avoid accidents and damage to existing HELCO facilities, which can result in electrocution.

5. Overhead Lines

State law requires that a worker and the longest object he or she may contact cannot come closer than a minimum radial clearance of 10 feet when working close to or under any overhead lines rated 50KV and below. For each additional 1KV above 50KV, an additional 0.4 inch shall be added to the 10-foot clearance requirement. The preceding information on line clearance requirements is provided as a convenience and it is the contractor's responsibility to be informed of and comply with any revisions or amendments to the law.

Should the contractor anticipate that his work will result in the need to encroach within the minimum required clearance at any time, the contractor shall notify HELCO at least four (4) weeks prior to the planned encroachment so that, if feasible, the necessary protections (e.g. relocate, de-energize, or blanket HELCO lines) can be put in place. HELCO's cost or safeguarding its lines will be charged to the contractor.

Contact HELCO's customer installations department at 969-6666 for assistance in identifying and safeguarding overhead power lines.

Refer to Section X of HELCO's Electric Service Installation Manual for additional guidelines when working around HELCO's facilities. A copy may be obtained from HELCO's customer installations department.

6. Pole Bracing

A minimum clearance of 10 feet must be maintained when excavating around utility poles and/or their anchor system to prevent weakening or pole support failure. Should work require excavating within 10 feet of a pole and/or its anchor system, the contractor is responsible for all associated costs to brace, repair, or straighten poles. All means of structural support for the pole proposed by the contractor shall first by reviewed by HELCO before implementation. For pole bracing instructions, the contractor shall call the HELCO construction and maintenance department superintendent a minimum of two (2) weeks in advance.

7. Underground Lines

The contractor shall exercise extreme caution whenever construction crosses or is in close proximity of underground lines. HELCO's existing electrical cables are energized and will remain energized during construction. Only HELCO personnel are to break into existing HELCO facilities, handle these cables, and erect temporary guards to protect these cables from damage. The cost of HELCO's assistance in providing proper support and protection of its underground lines will be charged to the contractor. Special precautions are required when excavating near HELCO's 62KV underground lines (see HELCO instructions to consultants/contractors on "Excavation near HELCO's Underground 62KV Lines" for detailed requirements).

For verification of underground lines, the contractor shall call ONE-CALL a minimum of 72 hours in advance.

For assistance in providing proper support and protection of these lines, the contractor shall call HELCO's construction & maintenance department superintendent, a minimum of two (2) weeks in advance.

8. Underground Fuel Pipelines

The contractor shall exercise extreme caution whenever construction crosses or is in close proximity of HELCO's underground fuel oil pipelines. Special precautions are required when excavating near HELCO's underground fuel oil pipelines (see HELCO instructions to consultants/contractors on "Excavation near HELCO's underground fuel pipelines" for detailed requirements).

9. Excavations

When trench excavation is adjacent to or beneath HELCO's existing structures or facilities, the contractor is responsible for:

Sheeting and bracing the excavation and stabilizing the existing ground to render it safe and secure and to prevent possible slides, cave-ins and settlements. Properly supporting existing structures or facilities with beams, struts, under-pinnings to fully protect it from damage.

Backfilling with proper backfill material including special thermal backfill where existing (refer to Engineering Department for Thermal Backfill Specifications).

10. Relocation of HELCO Facilities

Any work required to relocate or modify HELCO facilities shall be done by HELCO, or by the contractor under HELCO's supervision. The contractor shall be responsible for all coordination, and shall provide necessary supports for HELCO's work, which may include, but not be limited to, excavation and backfill, permits and traffic control, barricading, and restoration of pavement, sidewalks, and other facilities.

All costs associated with any relocation or modification (either temporary or permanent) for the convenience of the contractor, or to enable the contractor to perform his work in a safe and expeditions manner in fulfilling his contract obligations shall be borne by the contractor.

11. Conflicts

Any redesign or relocation of HELCO's facilities not shown on the plans may be cause for lengthy delays. The contractor acknowledges that HELCO is not responsible for any delay or damage that may arise as a result of any conflicts discovered or identified with respect to the location or construction of HELCO's electrical facilities in the field, regardless of whether the contractor has met the requested minimum advance notices. In order to minimize any delay or impact arising from such conflicts, HELCO should be notified immediately upon discovery or identification of such conflict.

12. Damage to HELCO Facilities

The contractor shall be responsible for the protection of all HELCO surface and subsurface utilities and shall be responsible for any damages to HELCO's facilities as a result of his operations. The contractor shall immediately report such damages to HELCO's trouble dispatcher. Repair work shall be done by HELCO or by the contractor under HELCO's supervision. All costs for damages to HELCO's facilities shall be borne by the contractor.

In case of damage of suspected damage to HELCO's fuel pipeline, the contractor shall immediately notify HELCO's trouble desk (969-6666) (a 24-hour number) so HELCO personnel can secure the damaged section and report any oil spills to proper authorities. All costs associated with the damage, repair, oil spill cleanup shall be borne by the contractor.

13. HELCO Stand-by Personnel

The contractor may request HELCO to provide an inspector to stand-by during construction near HELCO's facilities. The cost of such inspection will be charged to the contractor. The contractor shall call HELCO construction and maintenance department superintendent a minimum of 5 working days in advance to arrange for HELCO stand-by personnel.

RONALD N. S. HO & ASSOC., INC.
Electrical Engineers

LENSON J. SANTOS
LICENSED PROFESSIONAL ENGINEER
No. 14286-E
HAWAII, U. S. A.

THIS WORK WAS PREPARED BY ME OR UNDER MY SUPERVISION AND CONSTRUCTION OF THIS PROJECT WILL BE UNDER MY OBSERVATION AS DEFINED IN HAR TITLE 16, CHAPTER 115, RULES OF THE BOARD OF PROFESSIONAL ENGINEERS, ARCHITECTS AND SURVEYORS. STATE OF HAWAII

APRIL 30, 2028
LIC. EXP. DATE

STATE OF HAWAII
DEPARTMENT OF TRANSPORTATION
HIGHWAYS DIVISION

HELCO NOTES

HILO BAYFRONT HIGHWAY
Intersection Improvements at Waianuenue Avenue
Federal Aid Project No. NH-019-2(076)

Scale: As Noted Date: Sept. 2026

SHEET No. 2 OF 25 SHEETS

ORIGINAL PLAN
NOTE BOOK
No.

SURVEY PLOTTED BY
DRAWN BY CAD
TRACED BY
DESIGNED BY MP
QUANTITIES BY
CHECKED BY JS
DATE: : : :

Z:\ACAD\PROJECTS\225076\E73_HELCO_Notes_225076.dwg 09/22/26 - 11:47am MPeltner

FED. ROAD DIST. NO.	STATE	FED. AID PROJ. NO.	FISCAL YEAR	SHEET NO.	TOTAL SHEETS
HAWAII	HAW.	NH-019-2(076)	2026	74	106

HAWAII ELECTRIC LIGHT COMPANY (HELCO) NOTES, continued.

14. Clearances

The following clearances shall be maintained between HELCO's ductline and all adjacent structures (charted and uncharted) in the trench:

Structure Type	Minimum Clearances (inches)
Waterlines, parallel	36 (A)
Waterlines, crossings	12 (B)
Sewer lines, parallel	36 (C)
Sewer lines, crossings	24 (D)
Drain lines, parallel	12
Drain lines, crossings	6 (E)
Electrical and Gas lines, parallel	12
Electrical and Gas lines, crossings	12
Telephone lines, parallel	6 (E)
Telephone lines, crossings	6 (E)
Chevron oil lines, parallel	36
Chevron oil lines, crossings	48 below oil line (F)

A. The minimum horizontal clearances to water lines parallel to electrical ductlines must be increased to 60 inches if the water line is greater than 16 inches in diameter.

B. The minimum vertical clearances to water lines crossing electrical ductlines can be reduced to 6 inches if the electrical ductline structure is concrete encased and is below the water line and the water line is less than 16 inches in diameter.

C. A minimum horizontal clearance of 36 inches is required between new handholes and existing sewer laterals.

D. The minimum vertical clearances to sewer pipes crossing electrical ductlines can be reduced to 12 inches if the sewer pipe is jacketed in concrete.

E. The minimum clearances shall be increased to 12 inches if the electrical ductline is direct buried.

F. The minimum vertical clearances to oil lines crossing electrical ductlines can be reduced to 24 inches below oil lines if the crossings are encased in 6 inches of concrete.

G. The contractor shall notify the construction manager & HELCO of any heat sources (power cable duct bank, steamline, etc.) encountered that are not properly identified on the drawing.

The following clearance shall be maintained between HELCO's fuel oil pipelines and all adjacent structures: 24-inches, parallel or crossing. The minimum clearance can be reduced to 12 inches (parallel and below only) if the structure is jacketed in concrete.

15. Indemnity

The contractor shall indemnify, defend and hold harmless HELCO from and against all losses, damages, claims, and actions, including but not limited to reasonable attorney's fees and costs based upon or limited to reasonable attorney's fees and costs based upon or arising out of damage to property or injuries to persons, or other tortious acts caused or contributed to by contractor or anyone acting under its direction or control or on its behalf; provided contractor's indemnity shall not be applicable to any liability based upon the sole negligence of HELCO.

16. Schedule

Contractor shall furnish his construction schedule 22 working days prior to starting work on HELCO facilities. Contractor shall give HELCO, in writing 30 working days notice to proceed with HELCO's portion of work.

17. Authority

All construction, restoration work, and inspection shall be subject to whichever governmental agency has authority over the work.

18. Specifications

Construction of HELCO's underground facilities shall be constructed in accordance with the latest revision of HELCO specifications CS7001, CS7003, CS7202, CS9301, AND CS9401 AND APPLICABLE HELCO STANDARDS.

19. Construction

Contractor shall furnish all labor, materials, equipment, and services to properly perform and fully complete all work shown on the contract, drawings, and specifications. All materials shall be new and manufactured in the United States of America. All manhole, handhole, and ductlin installations shall be inspected and approved by HELCO prior to excavation and prior to placing concrete.

Contractor shall notify HELCO's inspection division at 935-1171 at least 48 hours prior to placing concrete. Contractor to coordinate work to break in HELCO's existing electrical facilities with HECLO's underground division at 935-1171 at least 10 working days in advance.

20. Stakeout

The contractor shall arrange for toneouts of all underground facilities and shall stakeout all proposed HELCO facilities within the project area so as to not conflict with any utility (existing or proposed) and any proposed construction or improvement work for verification by HELCO before proceeding with HELCO work.

21. Ductlines

All ductline installations shall be PVC schedule 40 encased in concrete, unless otherwise noted. All completed ductlines shall be mandrel tested by contractor in the presence of HELCO's inspector using HELCO's standard practice. The contractor shall install a 1/8" polyolefin pull line in all completed ductlines after mandrel testing is complete.

22. Joint Pole Removal

The last joint pole occupant off the poles shall remove the poles.

23. As-Built Plans

The contractor shall provide HELCO with two sets of As-Built reproducable tracings showing the offsets, stationing, and vertical elevation of duct line(s) constructed.

ORIGINAL PLAN
NOTE BOOK No.

		DATE
SURVEY PLOTTED BY	CAD	
DRAWN BY		
TRACED BY		
DESIGNED BY	MP	
QUANTITIES BY		
CHECKED BY	JS	

Z:\ACAD\PROJECTS\225076\E74_HELCO_Notes_continued_225076.dwg 09/22/26 - 11:47am MPetner

RONALD N. S. HO & ASSOC., INC.
Electrical Engineers

JENSON J. SANTOS
LICENSED PROFESSIONAL ENGINEER
No. 14286-E
HAWAII, U. S. A.

THIS WORK WAS PREPARED BY ME OR UNDER MY SUPERVISION AND CONSTRUCTION OF THIS PROJECT WILL BE UNDER MY OBSERVATION AS DEFINED IN HAR TITLE 16, CHAPTER 115, RULES OF THE BOARD OF PROFESSIONAL ENGINEERS, ARCHITECTS AND SURVEYORS. STATE OF HAWAII

APRIL 30, 2028
LIC. EXP. DATE

STATE OF HAWAII
DEPARTMENT OF TRANSPORTATION
HIGHWAYS DIVISION

HELCO NOTES CONTINUED

HILO BAYFRONT HIGHWAY
Intersection Improvements at Waianuenue Avenue
Federal Aid Project No. NH-019-2(076)

Scale: As Noted Date: Sept. 2026

SHEET No. 3 OF 25 SHEETS

FED. ROAD DIST. NO.	STATE	FED. AID PROJ. NO.	FISCAL YEAR	SHEET NO.	TOTAL SHEETS
HAWAII	HAW.	NH-019-2(076)	2026	75	106

SPECTRUM OCEANIC (CATV) NOTES:

1. The contractor shall procure and pay for all licenses and permits and shall give all notices necessary and incident to the due and lawful prosecution of the work.

2. The locations of existing utilities are approximate only. The contractor shall verify their locations and shall be responsible for any damages to these utilities as a result of his operations. Adjustments to the new ductline alignment, if required, shall be made to provide the required clearances.

3. The contractor shall brace all poles or light standards near the new ductline, manhole, or handhole during its operations.

4. The contractor shall saw-cut A.C. pavement, concrete gutter, and concrete sidewalk wherever new manholes, handholes, pullboxes or ductlines are to be placed and shall restore to existing condition or better.

5. The underground pipes, cables, or ductlines known to exist by the engineer from his search of records are indicated on the plans. The contractor shall verify the locations and depths of the facilities and exercise proper care in excavating in the areas. Wherever connections of new utilities to existing utilities are shown on the plans, the contractor shall expose the existing lines at the proposed connections to verify their locations and depths prior to excavation for the new lines.

6. The contractor, at his own expense, shall keep the project and surrounding area free from dust nuisance. The cost for supplementary measures, which will be required by the County, shall be borne me the contractor.

7. Prior to excavation of the ductline, the contractor shall request Spectrum Oceanic to locate existing ductline wherever required.

8. The contractor shall take necessar precaution not to damage existing cables or ducts. Any work involving existing cables or ducts shall be done in the presence of the Spectrum Oceanic's inspector or his representative. Temporary cable and duct support shall be provided wherever necessary.

9. The contractor shall notify the Spectrum Oceanic's inspector 72 hours prior to the start of work on CATV infrastructure, pouring concrete, or backfilling. Spectrum Oceanic's Inspector(s): Robert Moeller at 331-4925.

10. Wherever connections to existing utilities are shown on the plans, the contractor shall expose the existing lines prior to excavation of the main trenches to verify their locations and depths.

11. Contractor shall provide all materials and furnish all labor and equipment necessary to install the ductline in place complete.

12. The contractor shall be responsible for laying out all required lines and grades and shall preserve all bench marks and working points necessary to lay out the work correctly. The new ductline shall be adjusted by the contractor to suit the existing conditinos and details as described in the plans.

13. The contractor, at his own expenses, shall keep the project area free from dust nuisance. The work shall be in conformance with the air pollution control standards and regulations of the State of Hawaii, Department of Health.

14. The location of CATV facilities shown on plans are from existing records with varying degrees of accuracy as to its actual fixed location. The contractor shall use extreme caution when working in close proximity of CATV facilities.

15. The contractor shall obtain excavation permit clearance from Spectrum Oceanic's engineering section located at 200 Akamainui ST, Mililani Tech Park.

16. For any field assistance or vegetation of CATV facilities, the contractor shall call the technical operations center at 625-8378.

17. Any work required to relocate CATV facilities shall be done by Spectrum Oceanic and the contractor shall be responsible for all coordinattion requirements and associated costs.

18. Any damage to Spectrum Oceanic's facilities shall be reported to Spectrum Oceanic's repair dispatch department at 625-8185.

19. The contractor shall tunnel under existing concrete curb and gutter as necessary to extend conduit into existing CATV pullbox and into the proposed power supply pullbox.

20. All existing improvements that are disturbed during the construction phase shall be restored to its original or better condition at no cost to the County in accordance with the County's standards.

21. At locations where existing CATV pullbox replacement is proposed, the contractor shall take all necessary precaution not to damage the existing cables in the pullbox. All damages to existing cables shall be repaired by Spectrum Oceanic and paid for by the contractor.

22. Coordinate all penetration of telephone pullboxes with Hawaiian Telcom inspector.

23. Smooth finish inside wall of existing pullboxes and handholes to its original condition of better.

24. All new concrete encased conduit shall be PVC pipe schedule 40. All new direct-buried conduit shall be PVC pipe-schedule 80. Use of any other material type (GTS, ETC) shall be limited to matching existing facilities. Connection of dissimilar materials to require approval from Spectrum Oceanic's inspector and engineering department.

25. The contractor shall place poly cord throughout project, and secure in manholes, handholes, and pullboxes.

26. For 3" conduits or larger, the contractor shall install NEPTCO WP1800 muletape or approved equal in all ductlines, leave muletape in place for future use as a pull or fish line, unless otherwise noted. Reference GTE material code no. 571154. All ducts shall be capped to prevent entry of foreign material during construction and at completion of installation. Endbells are required for conduits 2" and larger.

27. Penetration into pullboxes if necessary to be from factory installed openings or from bricks position. Penetration from pullbox walls is not acceptable.

28. Bends in the duct alignment, due to changes in grade shall have a minimum radius of 20-feet. All 90-degree C-bends at a pole or at the building floor slab penetration, shall have a bend radius of 10 times the diameter of the duct or greater.

29. Minimum length of conduit used shall not be less than 5-feet in length. Use of partial conduit sections allowable is at Spectrum Oceanic's inspector(s) discretion.

30. All conduits shall enter through the end "short wall" of the pullbox. Entry shall be at 90 degrees (perpendicular) to the wall face with bends no less than 12" from exterior wall.

31. A minimum of (2) precast riser sections must be used on all 2'x4' or 2'x6' pullboxes.

32. All new construction shall utilize concrete precast base unless otherwise approved or specified by Spectrum Oceanic's inspector(s).

33. When three (3) or more 4" conduits enter one end wall of any pullbox, only brick bases will be allowed unless otherwise instructed/approved by Spectrum Oceanic's inspector(s).

34. Two minimum layers of bricks to be used lower than the lowest duct entering the pullbox. Top layer of brick to be flush with top of conduit or higher.

35. For upgrade/repairs to existing pullboxes, bricks may be used and shall always be at least two layers lower than the lowest duct entering the pullbox.

36. At no time shall cement mortar, wood, or any other material be used between precast sections.

ORIGINAL PLAN
NOTE BOOK
SURVEY PLOTTED BY
DRAWN BY CAD
TRACED BY
DESIGNED BY MP
QUANTITIES BY
CHECKED BY JS
No. DATE

Z:\ACAD\PROJECTS\225076\E75_Spectrum_Notes_225076.dwg 09/22/26 - 11:46am MPeltner

RONALD N. S. HO & ASSOC., INC.
Electrical Engineers

JENSON J. SANTOS
LICENSED PROFESSIONAL ENGINEER
No. 14286-E
HAWAII, U. S. A.

THIS WORK WAS PREPARED BY ME OR UNDER MY SUPERVISION AND CONSTRUCTION OF THIS PROJECT WILL BE UNDER MY OBSERVATION AS DEFINED IN HAR TITLE 16, CHAPTER 115, RULES OF THE BOARD OF PROFESSIONAL ENGINEERS, ARCHITECTS AND SURVEYORS. STATE OF HAWAII

APRIL 30, 2028
LIC. EXP. DATE

STATE OF HAWAII
DEPARTMENT OF TRANSPORTATION
HIGHWAYS DIVISION

SPECTRUM NOTES

HILO BAYFRONT HIGHWAY
Intersection Improvements at Waianuenue Avenue
Federal Aid Project No. NH-019-2(076)

Scale: As Noted Date: Sept. 2026

SHEET No. 4 OF 25 SHEETS

FED. ROAD DIST. NO.	STATE	FED. AID PROJ. NO.	FISCAL YEAR	SHEET NO.	TOTAL SHEETS
HAWAII	HAW.	NH-019-2(076)	2026	76	106

SPECTRUM OCEANIC (CATV) NOTES, continued:

37. Leveling or raising of boxes to grade must be done:
    - A. Pre-cast base(s) - Using gravel layer under base (Type 3B or equivalent approved by Spectrum Oceanic's Inspector)
    - B. Brick base(s) - Adjustments to brickwork section. The permanent installation of wooden wedges to accomplish this purpose will not be accepted.

38. 5/8" copper ground rods shall be placed in all pullboxes unless otherwise directed by Spectrum Oceanic. Ground rods will be placed in the corner 3" to 4" from the wall and away from any conduit with no more than 8" sticking up above ground.

39. Trenching to be by hand digging near and across existing utility lines.

40. Minimum clearance between street light stand and fire hydrants shall be three feet.

41. Underground utilities shown hereon is for information only. No guarentee is made on the accuracy or completeness of said installation.

42. For underground cable locating and marking, five working days advance notice is required. Three working days advance notice is required for any inspection by a designated representative. Contractor shall take necessary precaution not to damage any existing cables or ducts. Spectrum Oceanic's inspector or designated representative is required to be at any job site wherever there will be a breakage into or entry into any structure that contain Spectrum Oceanic's facilities.

43. Concrete strength shall be 3000 psi in 28 days.

44. Curing and backfilling. Maintain concrete in a moist condition for 24 hours minimum for 3,000 psi and 48 hours minimum for 2,500 psi before compacted backfilling; 72 hours minimum before permitting motor traffic load on ductline curing method shall meet Spectrum Oceanic's inspector's approval.

45. Install 4-mil. thick orange color warning tape 3-inch wide, entire length of trench when placing CATV conduits. Tape entire length of trench when placing CATV conduits. Tape should read "CAUTION BURIED CABLE LINE BELOW". Manufactured by Harris Industries, Inc., catalog number UT-43 or approved equal. Tape to be installed 12-inches below grade.

46. After ductline has been completed, a mandrel with a square front not less than 12-inch long and having a diameter of 1/4-inch less than the inside diameter of duct, shall be pulled through each duct after which a brush with stiff bristles shall be pulled through to make certain that no particles of earth, sand, or gravel have been left inside. Ducts shall be completely dry and clean.

47. Metallic entrance conduits shall be grounded.

48. All conduits within a building shall:
    - A. Be installed in the shortest and straightest possible run.
    - B. Have no section longer than 100-feet nor contain more than two 90-degree bends. An approved sized junction box or gutter box shall be placed if this is exceeded.
    - C. All bends shall be long sweep-radius bends but the inside radius of the bend must never be less than ten times the diameter of the conduit.

49. All construction must be inspected and approved by Spectrum Oceanic prior to the installation of any of its facilities and the energizing of its system.

50. Contractor and/or Customer shall provide Spectrum Oceanic with sufficient installation time in their occupancy time table.

ORIGINAL PLAN
NOTE BOOK No.

SURVEY PLOTTED BY
DRAWN BY CAD
TRACED BY
DESIGNED BY MP
QUANTITIES BY
CHECKED BY JS
DATE

Z:\ACAD\PROJECTS\225076\E76_Spectrum_Notes_continued_225076.dwg 09/22/26 – 11:46am MPetner

RONALD N. S. HO & ASSOC., INC.
Electrical Engineers

JENSON J. SANTOS
LICENSED PROFESSIONAL ENGINEER
No. 14286-E
HAWAII, U. S. A.

THIS WORK WAS PREPARED BY ME OR UNDER MY SUPERVISION AND CONSTRUCTION OF THIS PROJECT WILL BE UNDER MY OBSERVATION AS DEFINED IN HAR TITLE 16, CHAPTER 115, RULES OF THE BOARD OF PROFESSIONAL ENGINEERS, ARCHITECTS AND SURVEYORS. STATE OF HAWAII

APRIL 30, 2028
LIC. EXP. DATE

STATE OF HAWAII
DEPARTMENT OF TRANSPORTATION
HIGHWAYS DIVISION

SPECTRUM NOTES
CONTINUED
HILO BAYFRONT HIGHWAY
Intersection Improvements at Waianuenue Avenue
Federal Aid Project No. NH-019-2(076)

Scale: As Noted Date: Sept. 2026

SHEET No. 5 OF 25 SHEETS

FED. ROAD DIST. NO.	STATE	FED. AID PROJ. NO.	FISCAL YEAR	SHEET NO.	TOTAL SHEETS
HAWAII	HAW.	NH-019-2(076)	2026	77	106

HAWAIIAN TELCOM (HTCO) GENERAL CONSTRUCTION / DESIGN NOTES

1. The contractor shall procure and pay for all licenses and permits from the County or State, and shall give all notices necessary and incident to the due and lawful prosecution of the work.

2. The contractor shall provide all telecom drawings to ht-planreviews@hawaiiantel.com for review & approval at least 3 months ahead of the start of construction.

3. The contractor shall submit an excavation permit and toning request to hawaiian telcom's excavation permit team at ht-excavations@hawaiiantel.com or at http://www.hawaiiantel.com/excavation.

4. Prior to the excavation of the duct line, the contractor shall request Hawaiian Telcom to locate existing duct line wherever required. call one-call at #811 for underground cable locating and marking, five (5) calendar days advance notice is required. The locations of existing utilities are approximate only.

5. Contractor shall exercise extreme caution and shall maintain proper clearances whenever construction crosses or is in close proximity of Hawaiian Telcom facilities. The contractor shall verify their locations and shall be liable for any damages to Hawaiian Telcom facilities. any damages shall be reported immediately to Hawaiian Telcom's repair section at 808-643-3456. as a result of their operations, adjustments to the new duct line alignment, if required, shall be made to provide the required clearances.

6. The contractor shall take necessary precaution not to damage existing cables or ducts. A Hawaiian Telcom inspector or designated representative is required to be at any job site whenever there will be a breakage into or entry into any structure that contain Hawaiian Telcom facilities. temporary cable and duct supports shall be provided wherever necessary.

7. The contractor shall notify Hawaiian Telcom's inspector or designated representative a minimum of five (5) calendar days prior to excavation, bracing, or backfilling of Hawaiian Telcom's structures or facilities. Email ht-inspectors@hawaiiantel.com to find an inspector in your area.

8. All applicable construction work shall be done in accordance with the hawaiian telcom standard specifications for placing communications systems. All subsequent amendments and additions, and all other pertinent standards for telecommunication construction. Contractor shall familiarize their personnel by obtaining applicable specifications.

9. When excavation is adjacent to or beneath Hawaiian Telcom's existing structures or facilities, the contractor shall:

   A. Sheet and/or brace the excavation to prevent slides, cave-ins, or settlements to ensure no movement to Hawaiian Telcom's structures or facilities.

   B. protect existing structures and/or facilities with beams, struts, or underpinning while excavating beneath them to ensure no movement to Hawaiian Telcom's structures or facilities.

10. The contractor shall brace all poles or light standards near the new duct line, maintenance hole, or handhole during their operations.

11. The contractor shall saw-cut a.c. pavement and concrete gutter wherever new maintenance holes, handholes, or duct lines are to be placed and shall restore to existing condition or better.

12. The contractor shall comply with the policy adopted by the department of public works, city and county, concerning the replacement of concrete sidewalks after excavation work.

13. The underground pipes, cables, or duct lines known to exist by the engineer from their search of records are indicated on the plans. the contractor shall verify the locations and depths of the facilities and exercise proper care in excavating in the area. wherever connections of new utilities to existing utilities are shown on the plans, the contractor shall expose the existing lines at the proposed connections to verify their locations and depths prior to excavation for the new lines.

14. Wherever connections to existing utilities are shown on the plans, the contractor shall expose the existing lines prior to excavation of the main trenches to verify their locations and depths.

15. Trench shall have a flat surface and shall be deep enough to obtain minimum cover (see trench detail drawing 34028 in section 12).

   A. 12" backfill above concrete encased or direct buried conduits must be soft earth or sand and free of rocks. Fill must be able to pass through a 1/2" screen.

16. The contractor, at their own expense, shall keep the project and surrounding area free from dust nuisance. The cost for supplementary measures, which will be required by the federal, state, or county, shall be borne by the contractor.

17. The contractor shall pump all maintenance holes dry during final inspection.

18. The contractor shall notify Hawaiian Telcom inspector 5 calendar days prior to the pouring of concrete or backfilling.

19. When connecting to maintenance holes walls, all existing reinforcing bars shall be left intact. Ducts shall be adjusted in the field in order to clear reinforcing bars.

20. In joint trench applications, ht ducts should not be covered by other ducts in parallel. ht ducts cannot cross under power facilities.

21. The contractor shall be responsible for laying out all required lines and grades and shall preserve all bench marks and working points necessary to lay out the work correctly. The new duct line shall be adjusted by the contractor to suit the existing conditions and the details as described in the plans.

22. Minimum concrete strength (per bicsi ospdrm6 c-3) shall be:

For duct line & concrete pads	3000 psi at 28 days
For maintenance hole	4000 - 4500 psi at 28 days or as specified in approved drawing

23. Bends in the duct alignment, shall have a minimum radius of 25 feet for a change of direction of more than 5 degrees, either horizontally or vertically, but the maximum vertical curve shall be 30 degrees. The maximum number of 30 degree bends should not add up to over 180 degrees.

   A. All 90 degree c-bends at a pole or at the building floor slab penetration, shall have a bend radius of ten times the diameter of the duct or greater. Manufactured 90 degree duct bends may be used only for service pole, equipment risers, or building entry, unless specifically indicated as acceptable.

   B. Limit runs to (2) 90 degree bends, and u-bends not allowed.

24. Conduit riser on service pole shall terminate at least 6" above grade with riser ends capped with weather head or plugged with duct seal.

   A. When telephone and electric service conduits terminate on the same service pole, preferably, the two conduits should be placed opposite each other on the service pole. however, it is permissible to place conduits with less separation but not less than 1/4 of the circumference of the pole (climbing space must be maintained).

   B. Riser conduit shall be properly strapped.

   C. Muletape or approved equivalent shall be installed in all conduits.

25. Conduit riser on service pole shall terminate at least 6" above grade with riser ends capped with weather head or plugged with duct seal.

   A. When telephone and electric service conduits terminate on the same service pole, preferably, the two conduits should be placed opposite each other on the service pole. however, it is permissible to place conduits with less separation but not less than 1/4 of the circumference of the pole (climbing space must be maintained).

   B. Riser conduit shall be properly strapped.

   C. Muletape or approved equivalent shall be installed in all conduits.

26. Suggested maximum lengths between maintenance holes are 450', 350' between 2x4 pullboxes, and 150' between meter boxes; subject to engineering approval. Distances up to 850' between maintenance holes may be approved since it can still be rodded from each end when needed.

27. Recommend 18" under sidewalk but not less than 12" on private property, and 36" minimum in the right of way or under paved areas.

28. Clearance from power or foreign conduit - 3" when encased in concrete; 4" when separated with brick or mason; or 12" of well tamped earth. 6" when crossing or 12" when parallel to foreign objects, i.e., power, water or sewer pipe, etc. 6" when concrete encased from local power company.

   A. Telecom should be above electrical when underground.

   B. BWS requires a 3' minimum clearance to water mains (or 5' minimum to water mains 16" and larger) on Oahu only.

   C. Check with local utilities for any changes to their spacing requirements as well.

29. Minimum protection requirements for facilities subjected to vehicular traffic:

   A. Conduit size: 2" or 4"

   B. Type: PVC schedule 40

   C. Method of construction: Concrete encased preferred or required if less than 36" below grade or other applicable NESC requirements (whichever is smaller).

30. Strongly recommend that trees with aggressive root systems are not planted near conduit system.

31. After duct line has been completed, a mandrel with a square front not less than 12" long and having a diameter of 1/4" less than the inside diameter of the duct, shall be pulled through each duct after which a brush with stiff bristles shall be pulled through to make certain that no particles of earth, sand, or gravel have been left inside. Ducts shall be completely dry and clean.

32. All ducts and conduits shall have an 1800# polyester mule-tape (neptco, wp1800p, Hawaiian Telcom material code no. 5711154) installed throughout its entire length. All ducts shall be capped to prevent entry of foreign material during construction and at the completion of installation.

RONALD N. S. HO & ASSOC., INC.
Electrical Engineers

JENSON J. SANTOS
LICENSED PROFESSIONAL ENGINEER
No. 14286-E
HAWAII, U. S. A.

THIS WORK WAS PREPARED BY ME OR UNDER MY SUPERVISION AND CONSTRUCTION OF THIS PROJECT WILL BE UNDER MY OBSERVATION AS DEFINED IN HAR TITLE 16, CHAPTER 115, RULES OF THE BOARD OF PROFESSIONAL ENGINEERS, ARCHITECTS AND SURVEYORS. STATE OF HAWAII

APRIL 30, 2028
LIC. EXP. DATE

STATE OF HAWAII
DEPARTMENT OF TRANSPORTATION
HIGHWAYS DIVISION

HAWAIIAN TELCOM
NOTES
HILO BAYFRONT HIGHWAY
Intersection Improvements at Waianuenue Avenue
Federal Aid Project No. NH-019-2(076)

Scale: As Noted Date: Sept. 2026

SHEET No. 6 OF 25 SHEETS

77

ORIGINAL PLAN
NOTE BOOK
No.

	DATE
SURVEY PLOTTED BY	
DRAWN BY CAD	: :
TRACED BY	: :
DESIGNED BY MP	: :
QUANTITIES BY	: :
CHECKED BY JS	: :

Z:\ACAD\PROJECTS\225076\E77_HTEL_Notes_225076.dwg 09/22/26 - 11:45am MPetner

FED. ROAD DIST. NO.	STATE	FED. AID PROJ. NO.	FISCAL YEAR	SHEET NO.	TOTAL SHEETS
HAWAII	HAW.	NH-019-2(076)	2026	78	106

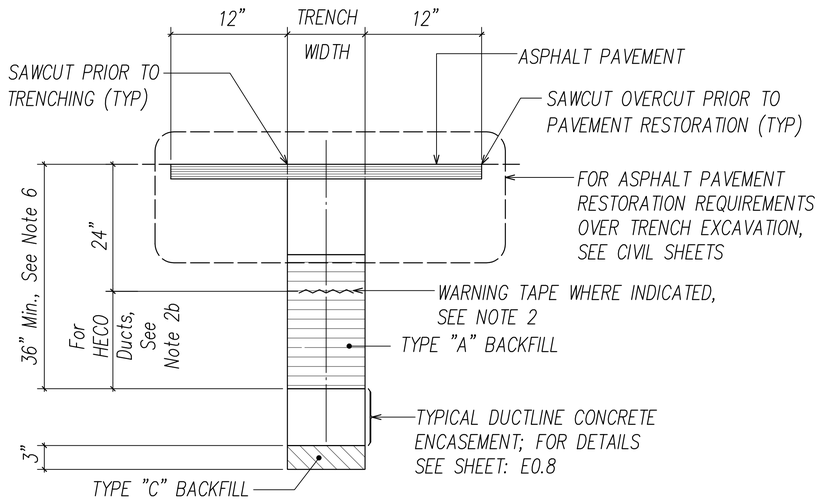

A 78 ASPHALT PAVEMENT RESTORATION OVER TRENCH EXCAVATION WITHIN STATE R-O-W

NOT TO SCALE

STATE RIGHT-OF-WAY BACKFILL NOTES

- TRENCH BACKFILL MATERIAL "A" When Tested According to AASHTO T176, The Sand Equivalent Value Shall be 20 or Greater.
- TRENCH BACKFILL MATERIAL "B" When Tested According to AASHTO T176, The Sand Equivalent Value of the Backfill Material Shall be Equal to or Greater Than the Surrounding Soil.
- TRENCH BACKFILL MATERIAL "C" Excavate Material and Provide 3" Backfill Material "A", See Above.
- CONCRETE – 3" ENCASEMENT, 3000 PSI COMPRESSIVE STRENGTH @ 28 DAYS.

NOTE:

See Specification Section 703.21 for Additional Trench Backfill Material Requirements.

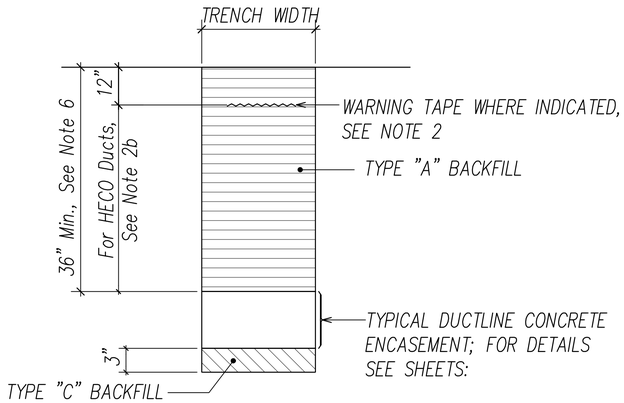

B 78 BACKFILL SECTION WITHIN STATE R-O-W BEYOND PAVED ROADWAY

NOT TO SCALE

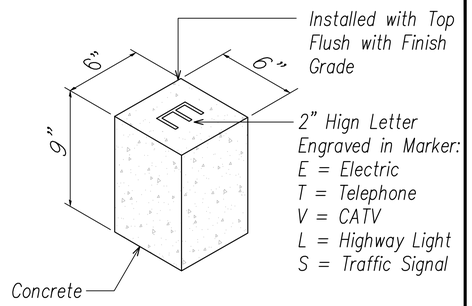

C 78 CONCRETE CONDUIT STUB-OUT MARKER

NOT TO SCALE

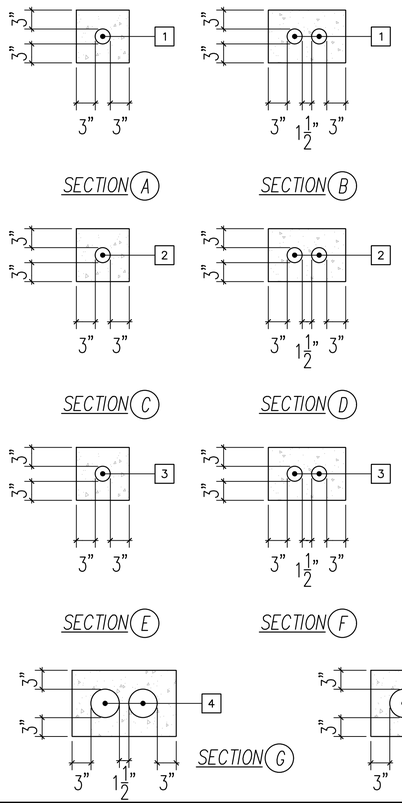

Duct And Wire Schedule			
No.	Duct Size	Wire Size	Destination Or Use
1	2"	See One-line Diagram	Secondary HELCO Service Cables
2	2"	See One-line Diagram	Street Lighting
3	2"	Pc	Traffic Camera / CCTV
4	4"	Pc	Future Telecom
4	5"	Pc	Hawaiian Telcom

Notes:
1. All Concrete Encased Ducts Shall Be Schedule 40 Pvc.
2. All Direct Buried Ducts Shall Be Schedule 80 Pvc.
3. Pc Indicates Provide Pullcord.

D 78 DUCT SECTIONS

NOT TO SCALE

GENERAL DUCTLINE DUCT SECTION NOTES:

1. If trench is located on unpaved area, the Contractor shall replace 10" A.C. Base Course and 4" A.C. Pavement with Type "A" backfill material.

2. The Metal Detectable Red Plastic Warning Tape shall be a minimum 5 mils thick and 4" wide with a continuous metallic backing and corrosion resistant 1' min thick foil core. For the State DOT traffic signal and highway lighting ducts, the message on the tape shall read, "CAUTION – STATE TRAFFIC SIGNAL AND/OR HWY LIGHTING BURIED BELOW," utilizing 1 1/2 inches series "C" block lettering. The message will be repeated with a 4 1/4" spacing between top line of message and start of next repeat.

   a. For the respective utility company ducts, provide metal detectable warning tape over respective utility company ducts per respective utility company requirements and approval.

   b. For HECo, provide warning tape per HECo Specfication M0302-0; place warning tape 12 inches above the HECo ductbank unless backfilling with fluidized thermal backfill (FTB). When FTB is used, place warning tape at the boundary between the FTB and pavement section.

3. The Contractor may begin backfilling the conduit trench when the concrete reaches 3000 psi compressive strength after 3 days.

4. Clearances: Refer to HELCO Note No. 14 for clearance requirements between all ductlines and all adjacent structures (charted and uncharted) near the trench.

ORIGINAL PLAN
NOTE BOOK No.
SURVEY PLOTTED BY
DRAWN BY CAD
TRACED BY
DESIGNED BY MP
QUANTITIES BY
CHECKED BY JS
DATE

Z:\ACAD\PROJECTS\25076\E78_Typ Duct Sect_Det1_25076.dwg 09/22/26 - 11:45am MPetner

RONALD N. S. HO & ASSOC., INC.
Electrical Engineers

JENSON J. SANTOS
LICENSED PROFESSIONAL ENGINEER
No. 14286-E
HAWAII, U. S. A.

THIS WORK WAS PREPARED BY ME OR UNDER MY SUPERVISION AND CONSTRUCTION OF THIS PROJECT WILL BE UNDER MY OBSERVATION AS DEFINED IN HAR TITLE 16, CHAPTER 115, RULES OF THE BOARD OF PROFESSIONAL ENGINEERS, ARCHITECTS AND SURVEYORS. STATE OF HAWAII

APRIL 30, 2028
LIC. EXP. DATE

STATE OF HAWAII
DEPARTMENT OF TRANSPORTATION
HIGHWAYS DIVISION

DUCT SECTION DETAILS

HILO BAYFRONT HIGHWAY
Intersection Improvements at Waianuenue Avenue
Federal Aid Project No. NH-019-2(076)

Scale: As Noted Date: Sept. 2026

SHEET No. 7 OF 25 SHEETS

FED. ROAD DIST. NO.	STATE	FED. AID PROJ. NO.	FISCAL YEAR	SHEET NO.	TOTAL SHEETS
HAWAII	HAW.	NH-019-2(076)	2026	79	106

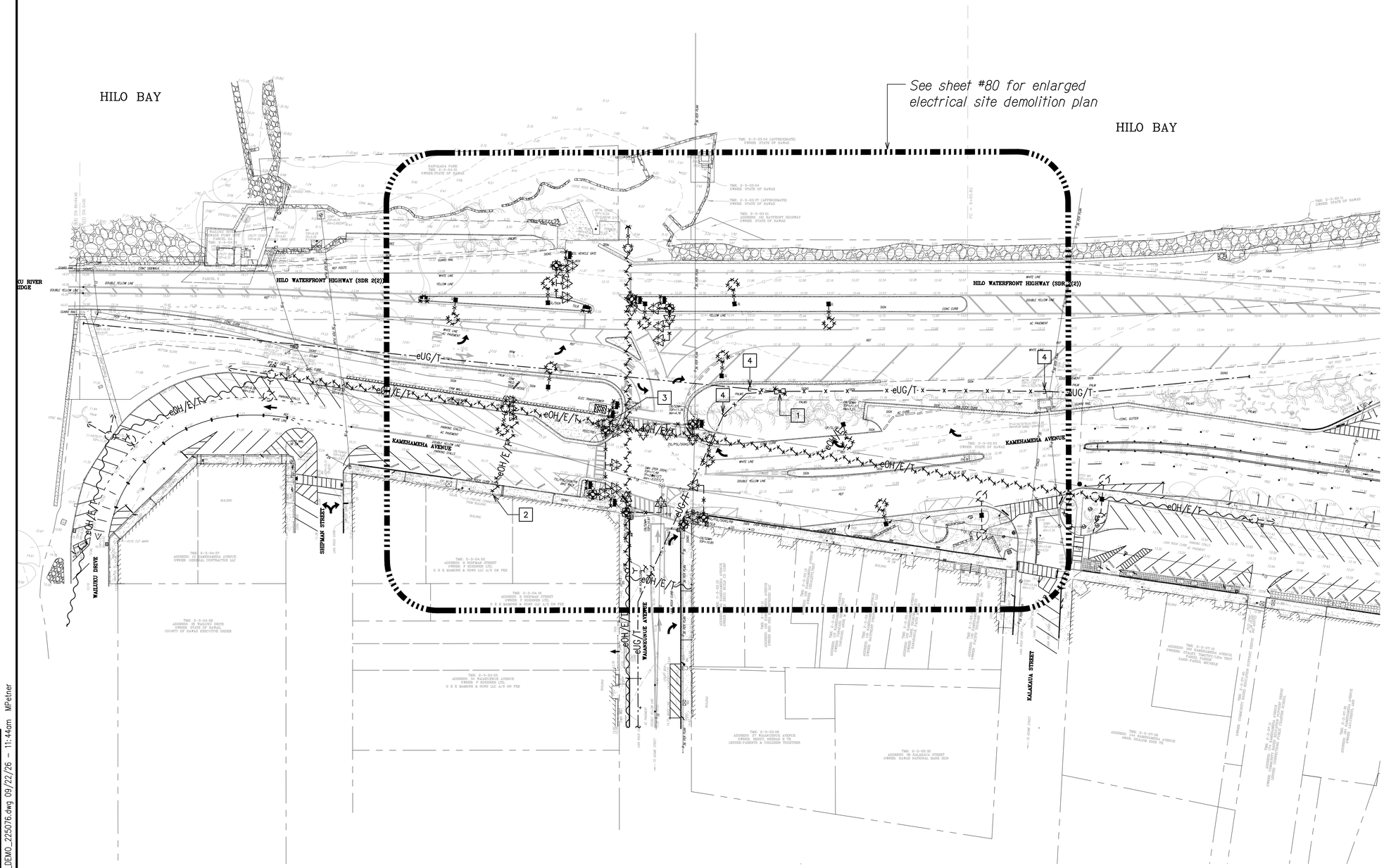

Note(s):

1. Existing Hawaiian Telcom handhole to be removed.
2. Existing service entrance conductors to be removed, work by HELCO.
3. Existing HELCO meter number: 868679.
4. Remove portion of existing Hawaiian Telcom duct system and create conduit stub for connection to new system. Contractor must coordinate with Hawaiian Telcom to have new manholes and ducts installed prior to removal of the existing handhole and ducts, work closely with Hawaiian Telcom Engineers to create necessary interceptions.
5. All HELCO, Spectrum and Hawaiian Telcom scope of work must be completed during Phase 1 of construction.

NORTH

Overall Electrical Site Demolition Plan

SCALE: 1" = 40'

40' 20' 0 40' 80' 120'

SCALE: 1"=40'

GRAPHIC SCALE

ORIGINAL PLAN | NOTE BOOK

SURVEY PLOTTED BY
DRAWN BY CAD
TRACED BY
DESIGNED BY MP
QUANTITIES BY
CHECKED BY JS
DATE:

Z:\ACAD\PROJECTS\225076\E79_GENERAL_SITE_DEMO_225076.dwg 09/22/26 - 11:44am MPetner

RONALD N. S. HO & ASSOC., INC.
Electrical Engineers

JENSON J. SANTOS
LICENSED PROFESSIONAL ENGINEER
No. 14286-E
HAWAII, U.S.A.

THIS WORK WAS PREPARED BY ME OR UNDER MY SUPERVISION AND CONSTRUCTION OF THIS PROJECT WILL BE UNDER MY OBSERVATION AS DEFINED IN HAR TITLE 16, CHAPTER 115, RULES OF THE BOARD OF PROFESSIONAL ENGINEERS, ARCHITECTS AND SURVEYORS. STATE OF HAWAII

APRIL 30, 2028
LIC. EXP. DATE

STATE OF HAWAII
DEPARTMENT OF TRANSPORTATION
HIGHWAYS DIVISION

OVERALL ELECTRICAL SITE DEMOLITION PLAN

HILO BAYFRONT HIGHWAY
Intersection Improvements at Waianuenue Avenue
Federal Aid Project No. NH-019-2(076)

Scale: As Noted Date: Sept. 2026

SHEET No. 8 OF 25 SHEETS

FED. ROAD DIST. NO.	STATE	FED. AID PROJ. NO.	FISCAL YEAR	SHEET NO.	TOTAL SHEETS
HAWAII	HAW.	NH-019-2(076)	2026	80	106

Note(s):

1. Existing Hawaiian Telcom handhole to be removed.
2. Existing service entrance conductors to be removed, work by HELCO.
3. Existing HELCO meter number: 868679.
4. Remove portion of existing Hawaiian Telcom duct system and create conduit stub for connection to new system. Contractor must coordinate with Hawaiian Telcom to have new manholes and ducts installed prior to removal of the existing handhole and ducts, work closely with Hawaiian Telcom Engineers to create necessary interceptions.
5. All HELCO, Spectrum and Hawaiian Telcom scope of work must be completed during Phase 1 of construction.

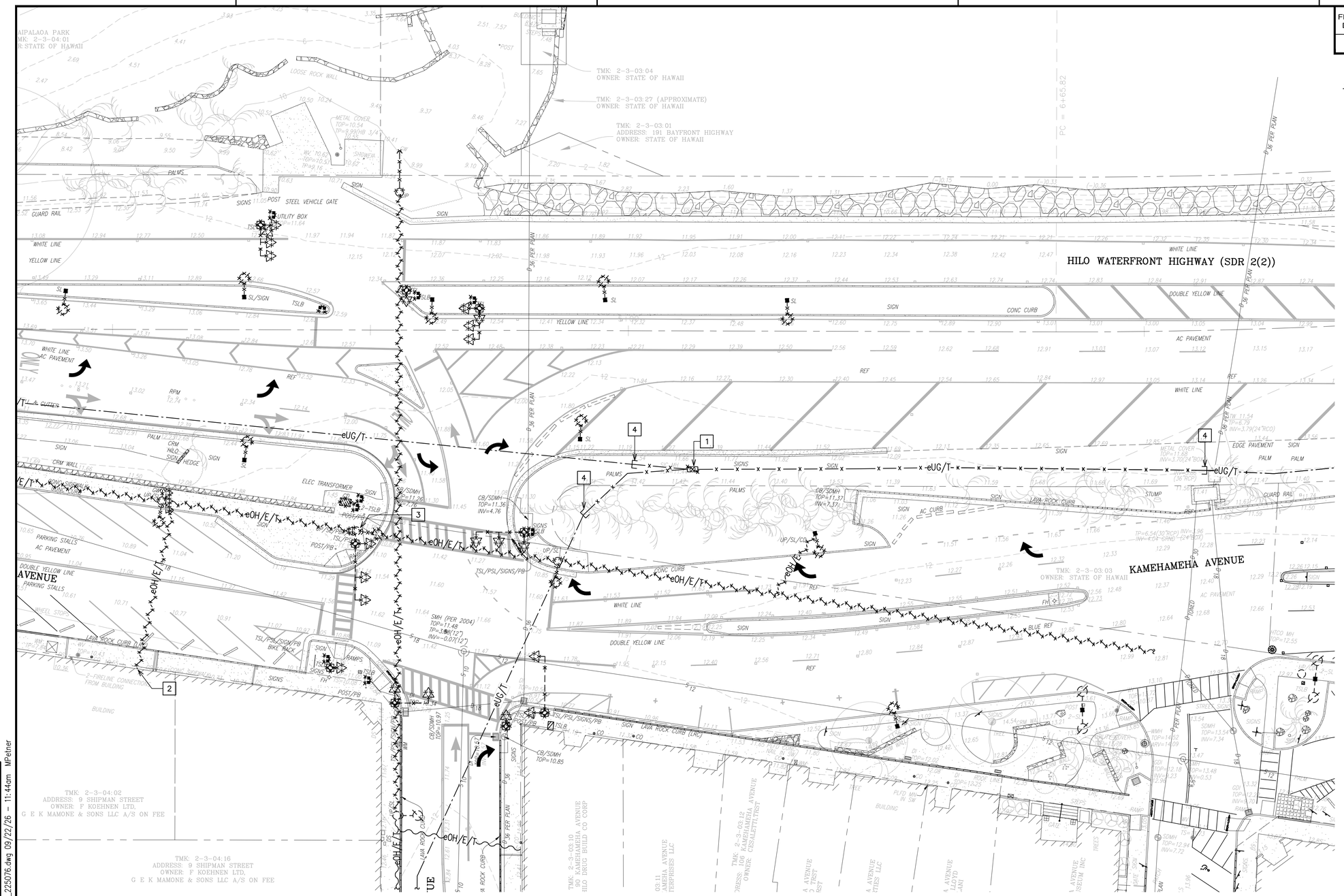

NORTH

Enlarged Electrical Site Demolition Plan

SCALE: 1" = 20'

20' 10' 0 20' 40' 60'

SCALE: 1"=20'

GRAPHIC SCALE

RONALD N. S. HO & ASSOC., INC.
Electrical Engineers

JENSON J. SANTOS
LICENSED PROFESSIONAL ENGINEER
No. 14286-E
HAWAII, U. S. A.

THIS WORK WAS PREPARED BY ME OR UNDER MY SUPERVISION AND CONSTRUCTION OF THIS PROJECT WILL BE UNDER MY OBSERVATION AS DEFINED IN HAR TITLE 16, CHAPTER 115, RULES OF THE BOARD OF PROFESSIONAL ENGINEERS, ARCHITECTS AND SURVEYORS. STATE OF HAWAII

APRIL 30, 2028
LIC. EXP. DATE

STATE OF HAWAII
DEPARTMENT OF TRANSPORTATION
HIGHWAYS DIVISION

ENLARGED ELECTRICAL SITE DEMOLITION PLAN

HILO BAYFRONT HIGHWAY

Intersection Improvements at Waianuenue Avenue
Federal Aid Project No. NH-019-2(076)

Scale: As Noted Date: Sept. 2026

SHEET No. 9 OF 25 SHEETS

ORIGINAL PLAN	SURVEY PLOTTED BY	CAD	DATE
NOTE BOOK	DRAWN BY		
	TRACED BY	MP	
	DESIGNED BY		
	QUANTITIES BY		
No.	CHECKED BY	JS	

Z:\ACAD\PROJECTS\225076\E80_AREA_1_DEMO_225076.dwg 09/22/26 - 11:44am MPetner

FED. ROAD DIST. NO.	STATE	FED. AID PROJ. NO.	FISCAL YEAR	SHEET NO.	TOTAL SHEETS
HAWAII	HAW.	NH-019-2(076)	2026	81	106

HILO BAY

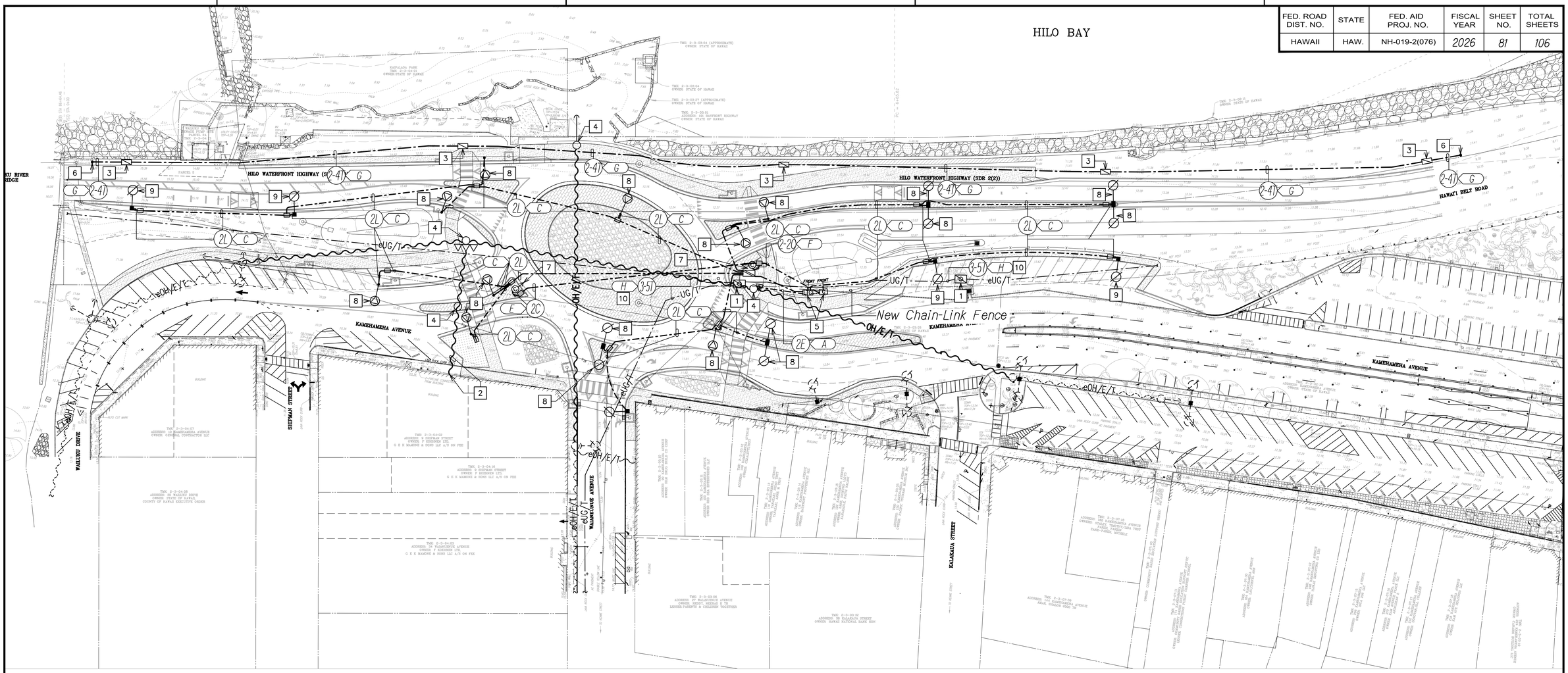

Note(s):

1. New Hawaiian Telcom manhole, traffic rated, 4' x 6'-6" x 6'-6". Provide concrete apron/collar for new manhole. See Hawaiian Telcom Standard Specification for Placing Communications Systems, Item ID 180014 and 180015.
2. New service entrance conductors to Koehnen Building, work by HELCO.
3. New Telecom handhole. Traffic rated.
4. Relocated or new HELCO pole. Coordinate work with HELCO.
5. New Street Lighting Cabinet, CCTV Metering Equipment and CCTV Cabinet.
6. Provide concrete conduit stub-out marker. See detail C/78.
7. New CCTV pole. See detail B/91.
8. Provide 8' Bracket Arm.
9. Provide 15' Bracket Arm.
10. New Hawaiian Telcom duct system. Connect new ducts to existing. Coordinate with Hawaiian Telcom to have new manholes and ducts installed prior to removal of existing system.
11. All HELCO, Spectrum and Hawaiian Telcom scope of work shall be completed during Phase 1 of construction.

Overall New Electrical Site Plan

SCALE: 1" = 40'

NORTH

40' 20' 0 40' 80' 120'

SCALE: 1"=40'

GRAPHIC SCALE

ORIGINAL PLAN
NOTE BOOK
No.
SURVEY PLOTTED BY
DRAWN BY CAD
TRACED BY
DESIGNED BY MP
QUANTITIES BY
CHECKED BY JS
DATE:

Z:\ACAD\PROJECTS\225076\EB1_GENERAL_SITE_NEW_225076.dwg 09/22/26 - 1:29pm MPetner

RONALD N. S. HO & ASSOC., INC.
Electrical Engineers

JENSON J. SANTOS
LICENSED PROFESSIONAL ENGINEER
No. 14286-E
HAWAII, U.S.A.

THIS WORK WAS PREPARED BY ME OR UNDER MY SUPERVISION AND CONSTRUCTION OF THIS PROJECT WILL BE UNDER MY OBSERVATION AS DEFINED IN HAR TITLE 16, CHAPTER 115, RULES OF THE BOARD OF PROFESSIONAL ENGINEERS, ARCHITECTS AND SURVEYORS. STATE OF HAWAII

APRIL 30, 2028
LIC. EXP. DATE

STATE OF HAWAII
DEPARTMENT OF TRANSPORTATION
HIGHWAYS DIVISION

OVERALL NEW ELECTRICAL SITE PLAN

HILO BAYFRONT HIGHWAY

Intersection Improvements at Waianuenue Avenue
Federal Aid Project No. NH-019-2(076)

Scale: As Noted Date: Sept. 2026

SHEET No. 10 OF 25 SHEETS

FED. ROAD DIST. NO.	STATE	FED. AID PROJ. NO.	FISCAL YEAR	SHEET NO.	TOTAL SHEETS
HAWAII	HAW.	NH-019-2(076)	2026	82	106

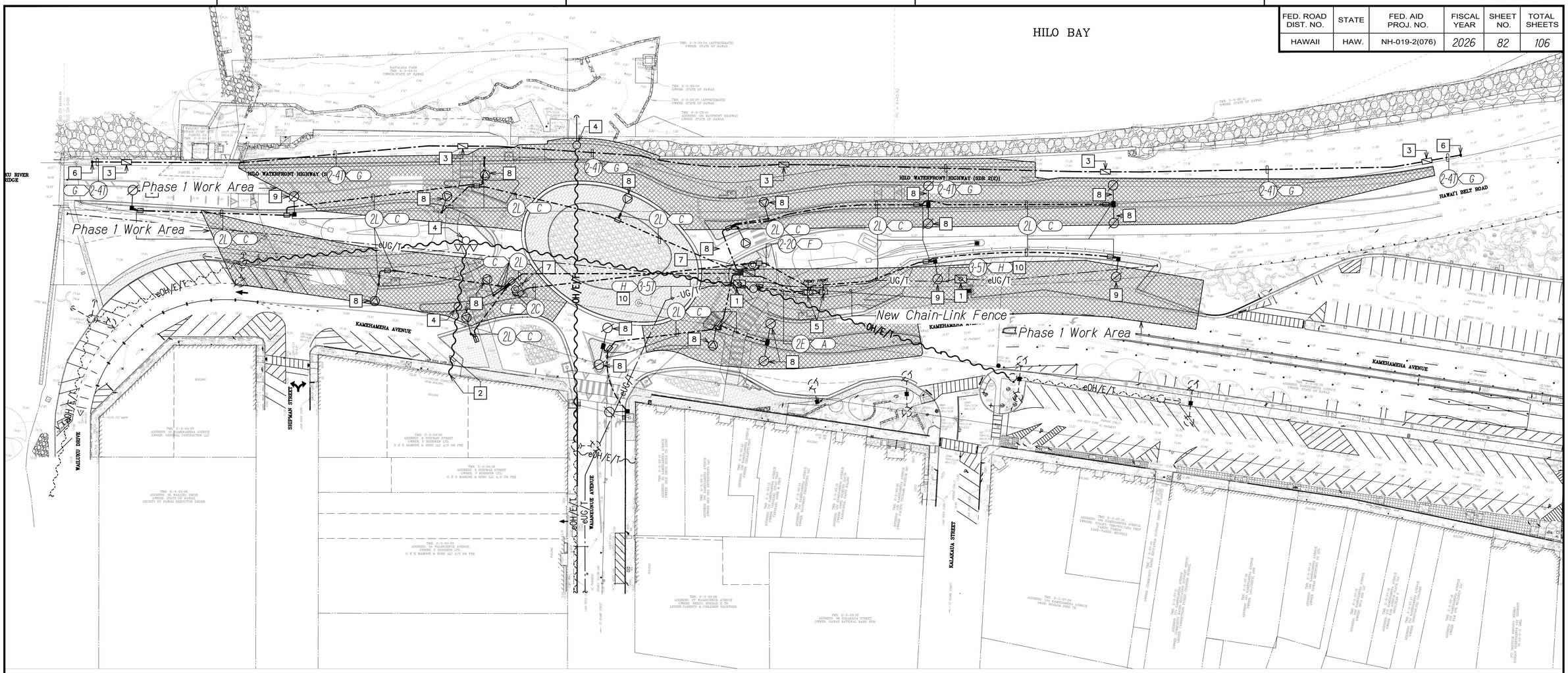

Note(s):

1. New Hawaiian Telcom manhole, traffic rated, 4' x 6'-6" x 6'-6". Provide concrete apron/collar for new handhole. See Hawaiian Telcom Standard Specification for Placing Communications Systems, Item ID 180014 and 180015.
2. New service entrance conductors to Koehnen Building, work by HELCO.
3. New Telecom handhole. Traffic rated.
4. Relocated or new HELCO pole. Coordinate work with HELCO.
5. New Street Lighting Cabinet, CCTV Metering Equipment and CCTV Cabinet.
6. Provide concrete conduit stub-out marker. See detail C/78.
7. New CCTV pole. See detail B/91.
8. Provide 8' Bracket Arm.
9. Provide 15' Bracket Arm.
10. New Hawaiian Telcom duct system. Connect new ducts to existing. Coordinate with Hawaiian Telcom to have new manholes and ducts installed prior to removal of existing system.
11. All HELCO, Spectrum and Hawaiian Telcom scope of work shall be completed during Phase 1 of construction.

Phase 1 New Electrical Site Plan

SCALE: 1" = 40'

NORTH

40' 20' 0 40' 80' 120'

SCALE: 1"=40'

GRAPHIC SCALE

ORIGINAL PLAN | NOTE BOOK No. ____ | SURVEY PLOTTED BY ____ DRAWN BY CAD TRACED BY ____ DESIGNED BY MP QUANTITIES BY ____ CHECKED BY JS DATE: ____

Z:\ACAD\PROJECTS\225076\E82_Phase_1_SITE_NEW_225076.dwg 09/22/26 - 11:43am MPetner

RONALD N. S. HO & ASSOC., INC.
Electrical Engineers

JENSON J. SANTOS
LICENSED PROFESSIONAL ENGINEER
No. 14286-E
HAWAII, U.S.A.

THIS WORK WAS PREPARED BY ME OR UNDER MY SUPERVISION AND CONSTRUCTION OF THIS PROJECT WILL BE UNDER MY OBSERVATION AS DEFINED IN HAR TITLE 16, CHAPTER 115, RULES OF THE BOARD OF PROFESSIONAL ENGINEERS, ARCHITECTS AND SURVEYORS. STATE OF HAWAII

APRIL 30, 2028
LIC. EXP. DATE

STATE OF HAWAII
DEPARTMENT OF TRANSPORTATION
HIGHWAYS DIVISION

PHASE 1 NEW ELECTRICAL SITE PLAN

HILO BAYFRONT HIGHWAY

Intersection Improvements at Waianuenue Avenue
Federal Aid Project No. NH-019-2(076)

Scale: As Noted Date: Sept. 2026

SHEET No. 11 OF 25 SHEETS

FED. ROAD DIST. NO.	STATE	FED. AID PROJ. NO.	FISCAL YEAR	SHEET NO.	TOTAL SHEETS
HAWAII	HAW.	NH-019-2(076)	2026	83	106

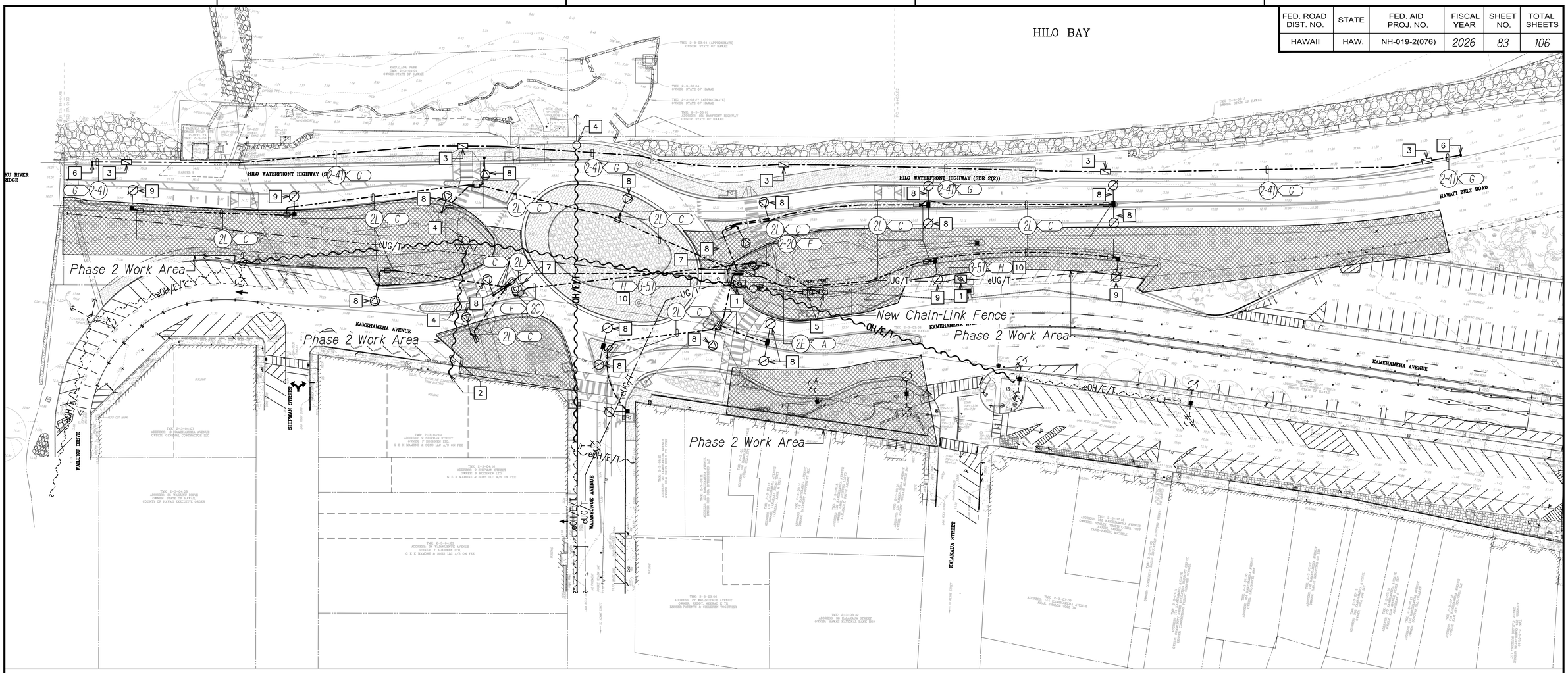

Note(s):

1. New Hawaiian Telcom manhole, traffic rated, 4' x 6'-6" x 6'-6". Provide concrete apron/collar for new handhole. See Hawaiian Telcom Standard Specification for Placing Communications Systems, Item ID 180014 and 180015.
2. New service entrance conductors to Koehnen Building, work by HELCO.
3. New Telecom handhole. Traffic rated.
4. Relocated or new HELCO pole. Coordinate work with HELCO.
5. New Street Lighting Cabinet, CCTV Metering Equipment and CCTV Cabinet.
6. Provide concrete conduit stub-out marker. See detail C/78.
7. New CCTV pole. See detail B/91.
8. Provide 8' Bracket Arm.
9. Provide 15' Bracket Arm.
10. New Hawaiian Telcom duct system. Connect to new ducts to existing. Coordinate with Hawaiian Telcom to have new manholes and ducts installed prior to removal of existing system.

NORTH

Phase 2 New Electrical Site Plan

SCALE: 1" = 40'

40' 20' 0 40' 80' 120'

SCALE: 1"=40'

GRAPHIC SCALE

ORIGINAL PLAN | NOTE BOOK | No.

SURVEY PLOTTED BY
DRAWN BY CAD
TRACED BY
DESIGNED BY MP
QUANTITIES BY
CHECKED BY JS
DATE:

Z:\ACAD\PROJECTS\225076\E83_Phase_2_SITE_NEW_225076.dwg 09/22/26 - 11:43am MPetner

RONALD N. S. HO & ASSOC., INC.
Electrical Engineers

JENSON J. SANTOS
LICENSED PROFESSIONAL ENGINEER
No. 14286-E
HAWAII, U.S.A.

THIS WORK WAS PREPARED BY ME OR UNDER MY SUPERVISION AND CONSTRUCTION OF THIS PROJECT WILL BE UNDER MY OBSERVATION AS DEFINED IN HAR TITLE 16, CHAPTER 115, RULES OF THE BOARD OF PROFESSIONAL ENGINEERS, ARCHITECTS AND SURVEYORS. STATE OF HAWAII

APRIL 30, 2028
LIC. EXP. DATE

STATE OF HAWAII
DEPARTMENT OF TRANSPORTATION
HIGHWAYS DIVISION

PHASE 2 NEW ELECTRICAL SITE PLAN

HILO BAYFRONT HIGHWAY

Intersection Improvements at Waianuenue Avenue
Federal Aid Project No. NH-019-2(076)

Scale: As Noted Date: Sept. 2026

SHEET No. 12 OF 25 SHEETS

FED. ROAD DIST. NO.	STATE	FED. AID PROJ. NO.	FISCAL YEAR	SHEET NO.	TOTAL SHEETS
HAWAII	HAW.	NH-019-2(076)	2026	84	106

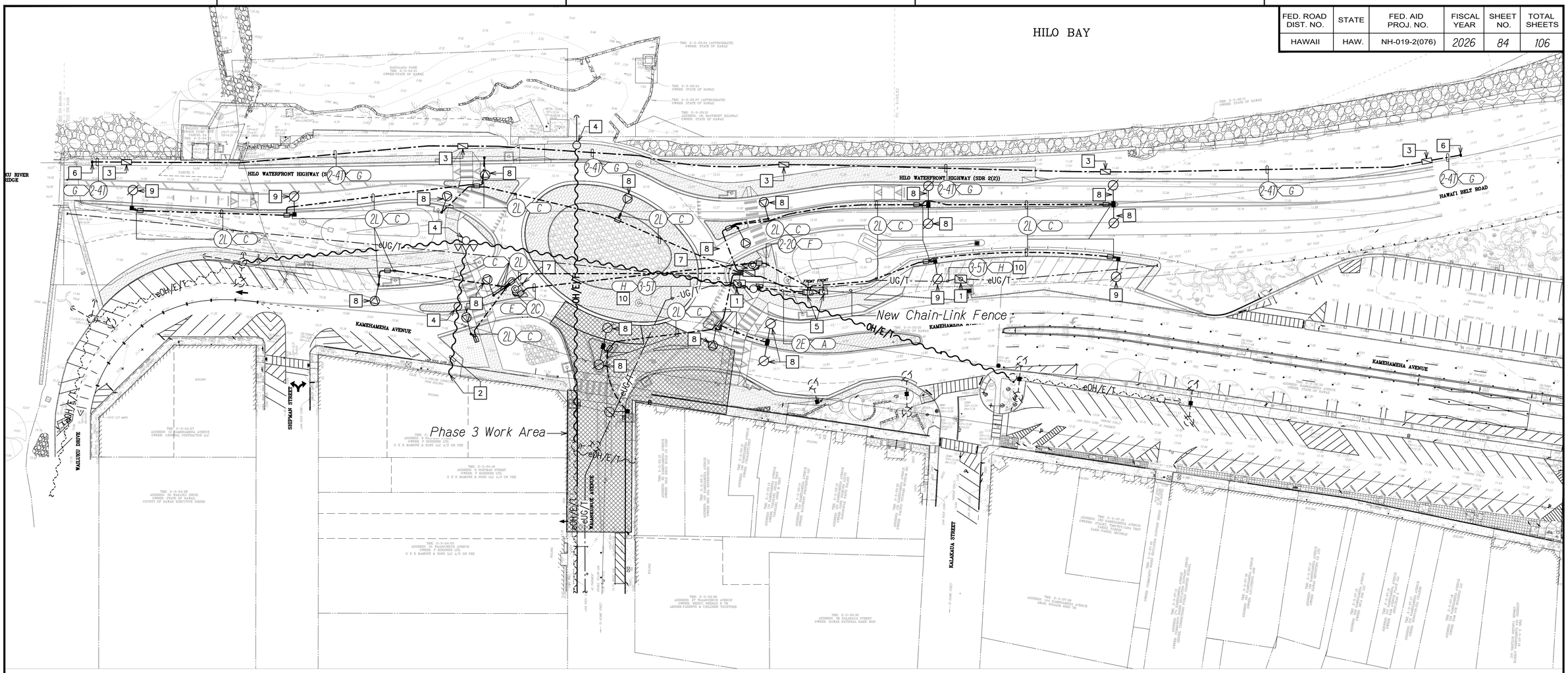

Note(s):

1. New Hawaiian Telcom manhole, traffic rated, 4' x 6'-6" x 6'-6". Provide concrete apron/collar for new handhole. See Hawaiian Telcom Standard Specification for Placing Communications Systems, Item ID 180014 and 180015.
2. New service entrance conductors to Koehnen Building, work by HELCO.
3. New Telecom handhole. Traffic rated.
4. Relocated or new HELCO pole. Coordinate work with HELCO.
5. New Street Lighting Cabinet, CCTV Metering Equipment and CCTV Cabinet.
6. Provide concrete conduit stub-out marker. See detail C/78.
7. New CCTV pole. See detail B/91.
8. Provide 8' Bracket Arm.
9. Provide 15' Bracket Arm.
10. New Hawaiian Telcom duct system. Connect to new ducts to existing. Coordinate with Hawaiian Telcom to have new manholes and ducts installed prior to removal of existing system.

ORIGINAL PLAN
NOTE BOOK
No.
SURVEY PLOTTED BY
DRAWN BY CAD
TRACED BY MP
DESIGNED BY
QUANTITIES BY US
CHECKED BY
DATE:

Z:\ACAD\PROJECTS\225076\E84_Phase_3_SITE_NEW_225076.dwg 09/22/26 - 12:00pm MPetner

NORTH

Phase 3 New Electrical Site Plan

SCALE: 1" = 40'

40' 20' 0 40' 80' 120'
SCALE: 1"=40'
GRAPHIC SCALE

RONALD N. S. HO & ASSOC., INC.
Electrical Engineers

JENSON J. SANTOS
LICENSED PROFESSIONAL ENGINEER
No. 14286-E
HAWAII, U.S.A.

THIS WORK WAS PREPARED BY ME OR UNDER MY SUPERVISION AND CONSTRUCTION OF THIS PROJECT WILL BE UNDER MY OBSERVATION AS DEFINED IN HAR TITLE 16, CHAPTER 115, RULES OF THE BOARD OF PROFESSIONAL ENGINEERS, ARCHITECTS AND SURVEYORS. STATE OF HAWAII

APRIL 30, 2028
LIC. EXP. DATE

STATE OF HAWAII
DEPARTMENT OF TRANSPORTATION
HIGHWAYS DIVISION

PHASE 3 NEW ELECTRICAL SITE PLAN

HILO BAYFRONT HIGHWAY
Intersection Improvements at Waianuenue Avenue
Federal Aid Project No. NH-019-2(076)

Scale: As Noted Date: Sept. 2026

SHEET No. 13 OF 25 SHEETS

FED. ROAD DIST. NO.	STATE	FED. AID PROJ. NO.	FISCAL YEAR	SHEET NO.	TOTAL SHEETS
HAWAII	HAW.	NH-019-2(076)	2026	85	106

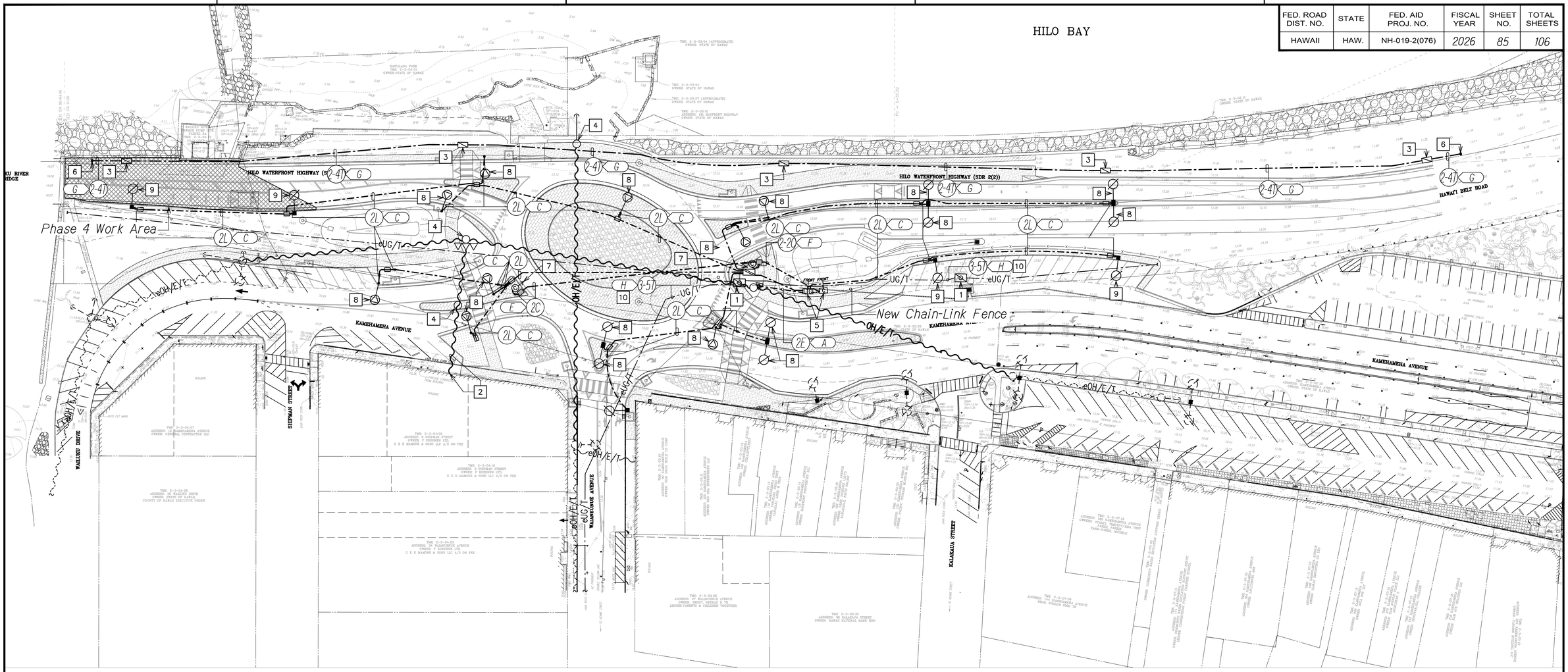

Note(s):

1. New Hawaiian Telcom manhole, traffic rated, 4' x 6'-6" x 6'-6". Provide concrete apron/collar for new handhole. See Hawaiian Telcom Standard Specification for Placing Communications Systems, Item ID 180014 and 180015.
2. New service entrance conductors to Koehnen Building, work by HELCO.
3. New Telecom handhole. Traffic rated.
4. Relocated or new HELCO pole. Coordinate work with HELCO.
5. New Street Lighting Cabinet, CCTV Metering Equipment and CCTV Cabinet.
6. Provide concrete conduit stub-out marker. See detail C/78.
7. New CCTV pole. See detail B/91.
8. Provide 8' Bracket Arm.
9. Provide 15' Bracket Arm.
10. New Hawaiian Telcom duct system. Connect to new ducts to existing. Coordinate with Hawaiian Telcom to have new manholes and ducts installed prior to removal of existing system.

ORIGINAL PLAN
NOTE BOOK
No.
SURVEY PLOTTED BY
DRAWN BY CAD
TRACED BY
DESIGNED BY MP
QUANTITIES BY
CHECKED BY JS
DATE:

Z:\ACAD\PROJECTS\225076\E85_Phase_4_SITE_NEW_225076.dwg 09/22/26 - 11:55am MPetner

NORTH

Phase 4 New Electrical Site Plan
SCALE: 1" = 40'

40' 20' 0 40' 80' 120'
SCALE: 1"=40'
GRAPHIC SCALE

RONALD N. S. HO & ASSOC., INC.
Electrical Engineers

JENSON J. SANTOS
LICENSED PROFESSIONAL ENGINEER
No. 14286-E
HAWAII, U.S.A.

THIS WORK WAS PREPARED BY ME OR UNDER MY SUPERVISION AND CONSTRUCTION OF THIS PROJECT WILL BE UNDER MY OBSERVATION AS DEFINED IN HAR TITLE 16, CHAPTER 115, RULES OF THE BOARD OF PROFESSIONAL ENGINEERS, ARCHITECTS AND SURVEYORS. STATE OF HAWAII

APRIL 30, 2028
LIC. EXP. DATE

STATE OF HAWAII
DEPARTMENT OF TRANSPORTATION
HIGHWAYS DIVISION

PHASE 4 NEW ELECTRICAL SITE PLAN

HILO BAYFRONT HIGHWAY
Intersection Improvements at Waianuenue Avenue
Federal Aid Project No. NH-019-2(076)

Scale: As Noted Date: Sept. 2026

SHEET No. 14 OF 25 SHEETS

FED. ROAD DIST. NO.	STATE	FED. AID PROJ. NO.	FISCAL YEAR	SHEET NO.	TOTAL SHEETS
HAWAII	HAW.	NH-019-2(076)	2026	86	106

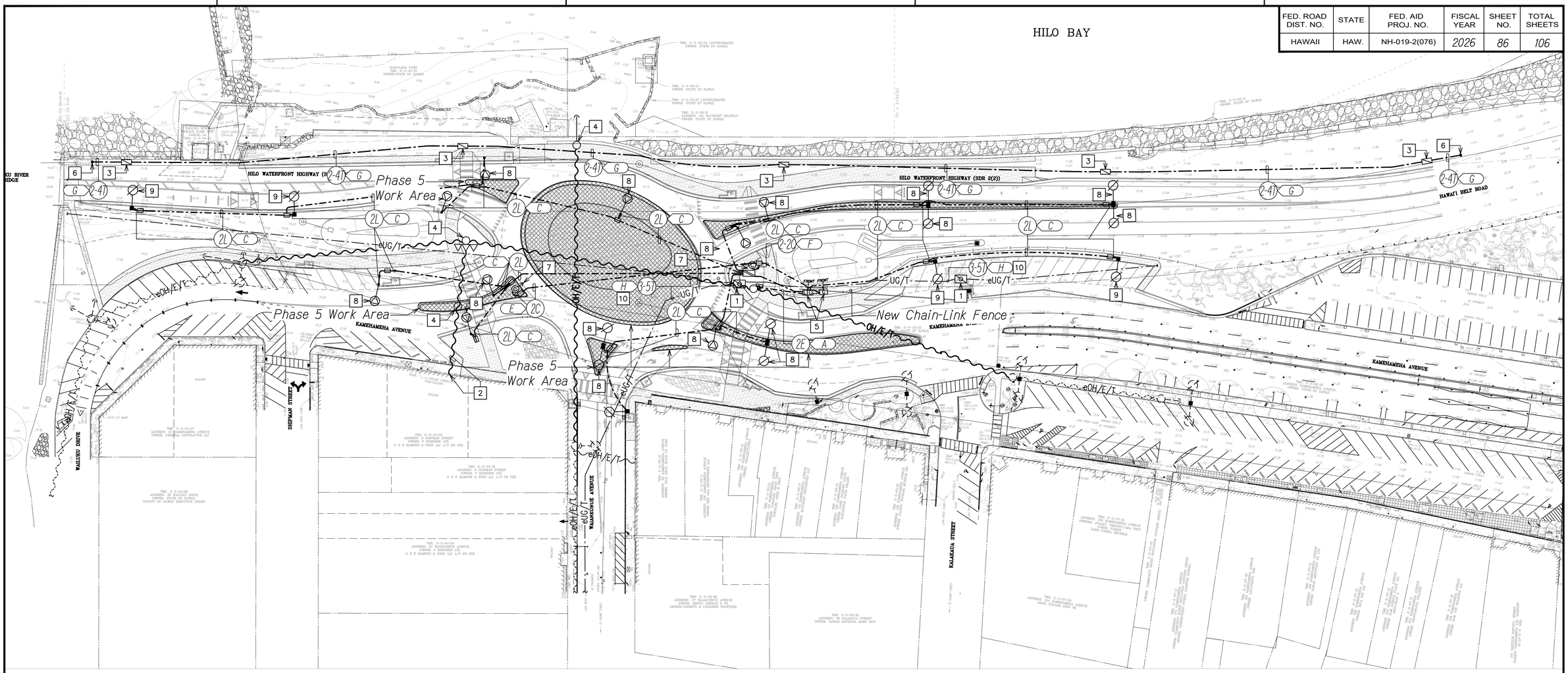

Note(s):

1. *New Hawaiian Telcom manhole, traffic rated, 4' x 6'-6" x 6'-6". Provide concrete apron/collar for new handhole. See Hawaiian Telcom Standard Specification for Placing Communications Systems, Item ID 180014 and 180015.*
2. *New service entrance conductors to Koehnen Building, work by HELCO.*
3. *New Telecom handhole. Traffic rated.*
4. *Relocated or new HELCO pole. Coordinate work with HELCO.*
5. *New Street Lighting Cabinet, CCTV Metering Equipment and CCTV Cabinet.*
6. *Provide concrete conduit stub-out marker. See detail C/78.*
7. *New CCTV pole. See detail B/91.*
8. *Provide 8' Bracket Arm.*
9. *Provide 15' Bracket Arm.*
10. *New Hawaiian Telcom duct system. Connect to new ducts to existing. Coordinate with Hawaiian Telcom to have new manholes and ducts installed prior to removal of existing system.*

ORIGINAL PLAN
NOTE BOOK
No.

SURVEY PLOTTED BY
DRAWN BY CAD
TRACED BY
DESIGNED BY MP
QUANTITIES BY
CHECKED BY JS
DATE:

Z:\ACAD\PROJECTS\225076\E86_Phase_5_SITE_NEW_225076.dwg 09/22/26 - 11:55am MPetner

RONALD N. S. HO & ASSOC., INC.
Electrical Engineers

JENSON J. SANTOS
LICENSED PROFESSIONAL ENGINEER
No. 14286-E
HAWAII, U.S.A.

THIS WORK WAS PREPARED BY ME OR UNDER MY SUPERVISION AND CONSTRUCTION OF THIS PROJECT WILL BE UNDER MY OBSERVATION AS DEFINED IN HAR TITLE 16, CHAPTER 115, RULES OF THE BOARD OF PROFESSIONAL ENGINEERS, ARCHITECTS AND SURVEYORS. STATE OF HAWAII

APRIL 30, 2028
LIC. EXP. DATE

NORTH

Phase 5 New Electrical Site Plan

SCALE: 1" = 40'

40' 20' 0 40' 80' 120'
SCALE: 1"=40'
GRAPHIC SCALE

STATE OF HAWAII
DEPARTMENT OF TRANSPORTATION
HIGHWAYS DIVISION

PHASE 5 NEW ELECTRICAL SITE PLAN

HILO BAYFRONT HIGHWAY
Intersection Improvements at Waianuenue Avenue
Federal Aid Project No. NH-019-2(076)

Scale: As Noted Date: Sept. 2026

SHEET No. 15 OF 25 SHEETS

FED. ROAD DIST. NO.	STATE	FED. AID PROJ. NO.	FISCAL YEAR	SHEET NO.	TOTAL SHEETS
HAWAII	HAW.	NH-019-2(076)	2026	87	106

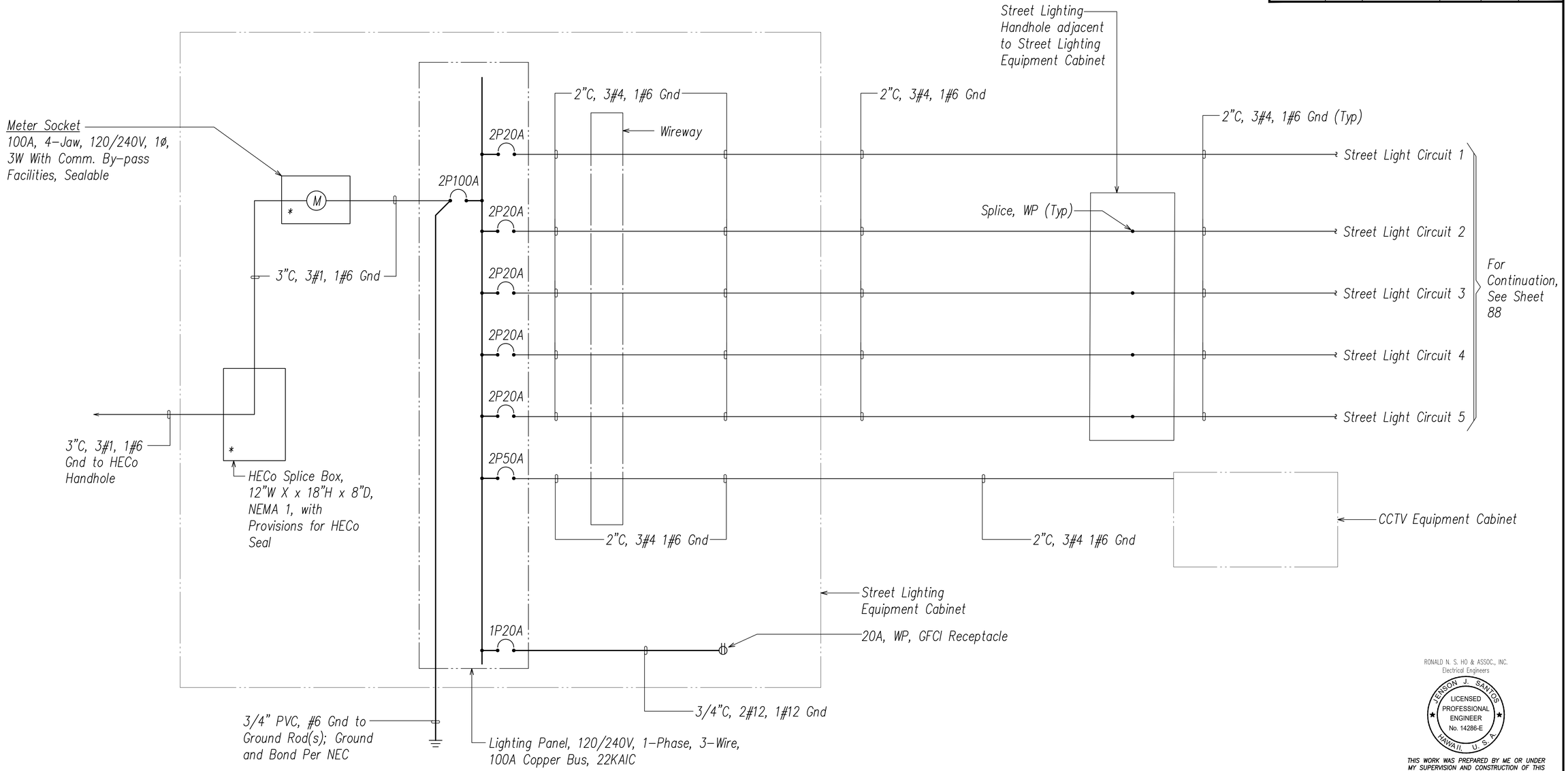

A/87 ONE-LINE DIAGRAM
Not to Scale

ORIGINAL PLAN
NOTE BOOK
No.

SURVEY PLOTTED BY
DRAWN BY CAD
TRACED BY
DESIGNED BY MP
QUANTITIES BY
CHECKED BY JS
DATE : : : : :

Z:\ACAD\PROJECTS\225076\E87_One_Line_225076.dwg 09/21/26 - 4:42pm MPelner

RONALD N. S. HO & ASSOC., INC.
Electrical Engineers

JENSON J. SANTOS
LICENSED PROFESSIONAL ENGINEER
No. 14286-E
HAWAII, U.S.A.

THIS WORK WAS PREPARED BY ME OR UNDER MY SUPERVISION AND CONSTRUCTION OF THIS PROJECT WILL BE UNDER MY OBSERVATION AS DEFINED IN HAR TITLE 16, CHAPTER 115, RULES OF THE BOARD OF PROFESSIONAL ENGINEERS, ARCHITECTS AND SURVEYORS. STATE OF HAWAII

APRIL 30, 2028
LIC. EXP. DATE

STATE OF HAWAII
DEPARTMENT OF TRANSPORTATION
HIGHWAYS DIVISION

ONE-LINE DIAGRAM

HILO BAYFRONT HIGHWAY
Intersection Improvements at Waianuenue Avenue
Federal Aid Project No. NH-019-2(076)

Scale: As Noted Date: Sept. 2026

SHEET No. 16 OF 25 SHEETS

FED. ROAD DIST. NO.	STATE	FED. AID PROJ. NO.	FISCAL YEAR	SHEET NO.	TOTAL SHEETS
HAWAII	HAW.	NH-019-2(076)	2026	88	106

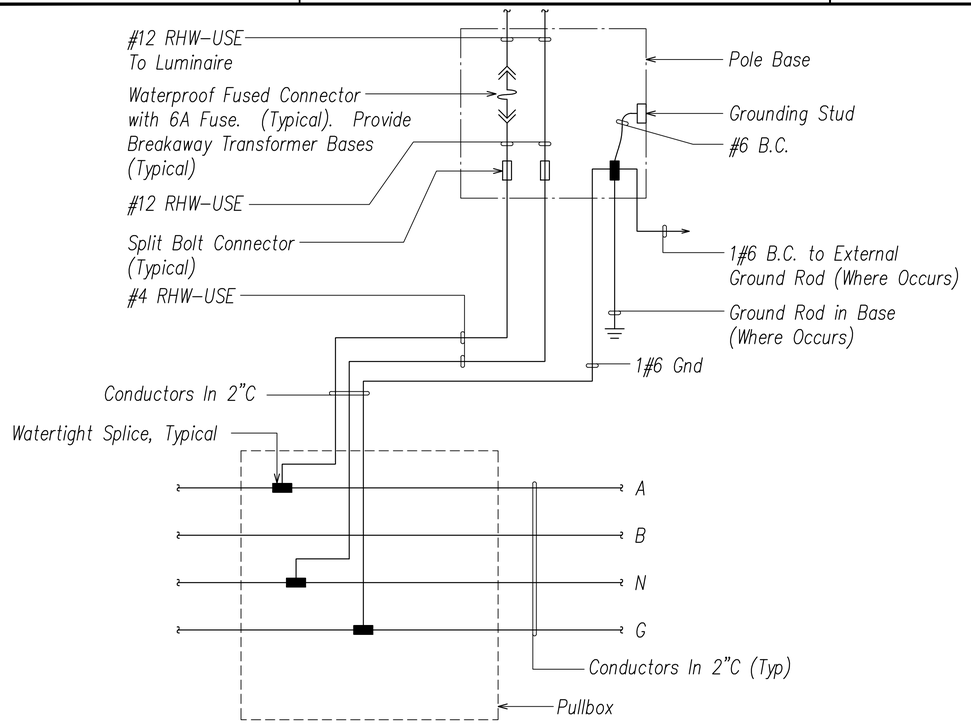

WIRING CONNECTION DIAGRAM – STREET LIGHTING STANDARD WHERE PULLBOX INSTALLED

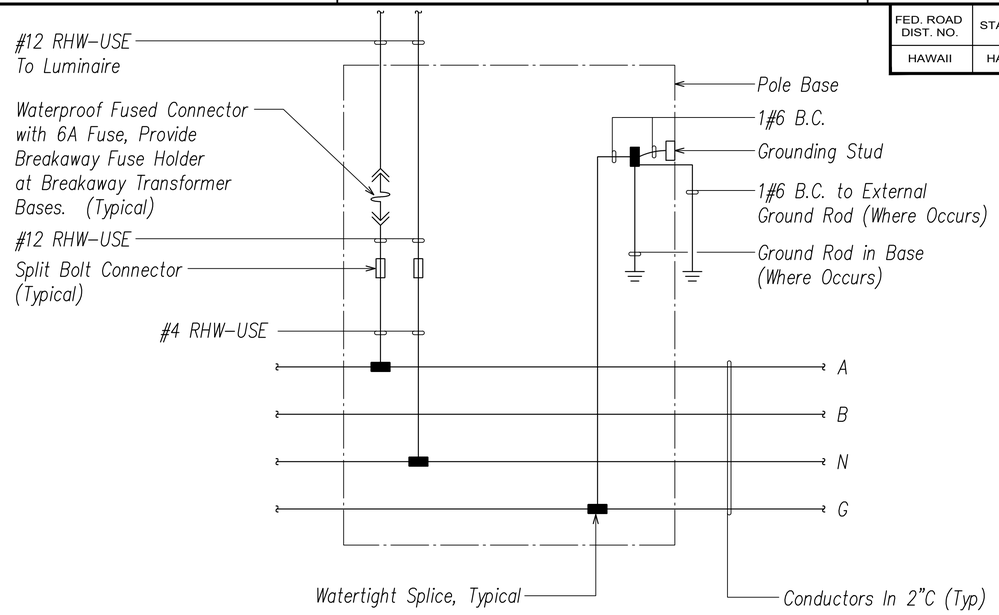

WIRING CONNECTION DIAGRAM TYPICAL STREET LIGHTING STANDARD

Notes:

1 2" Conduit 3#4, 1#6 Gnd Within.

A/88 HIGHWAY LIGHTING CONNECTION DIAGRAM
Not to Scale

RONALD N. S. HO & ASSOC., INC.
Electrical Engineers

JENSON J. SANTOS
LICENSED PROFESSIONAL ENGINEER
No. 14286-E
HAWAII, U.S.A.

THIS WORK WAS PREPARED BY ME OR UNDER MY SUPERVISION AND CONSTRUCTION OF THIS PROJECT WILL BE UNDER MY OBSERVATION AS DEFINED IN HAR TITLE 16, CHAPTER 115, RULES OF THE BOARD OF PROFESSIONAL ENGINEERS, ARCHITECTS AND SURVEYORS. STATE OF HAWAII

APRIL 30, 2028
LIC. EXP. DATE

STATE OF HAWAII
DEPARTMENT OF TRANSPORTATION
HIGHWAYS DIVISION

STREET LIGHTING TYPICAL CONNECTION DIAGRAMS

HILO BAYFRONT HIGHWAY
Intersection Improvements at Waianuenue Avenue
Federal Aid Project No. NH-019-2(076)

Scale: As Noted Date: Sept. 2026

SHEET No. 17 OF 25 SHEETS

ORIGINAL PLAN | NOTE BOOK No.

	DATE
SURVEY PLOTTED BY	
DRAWN BY	CAD
TRACED BY	MP
DESIGNED BY	
QUANTITIES BY	
CHECKED BY	JS

Z:\ACAD\PROJECTS\225076\E88_SL_Connection_Diagram_225076.dwg 09/21/26 – 4:41pm MPetner

FED. ROAD DIST. NO.	STATE	FED. AID PROJ. NO.	FISCAL YEAR	SHEET NO.	TOTAL SHEETS
HAWAII	HAW.	NH-019-2(076)	2026	89	106

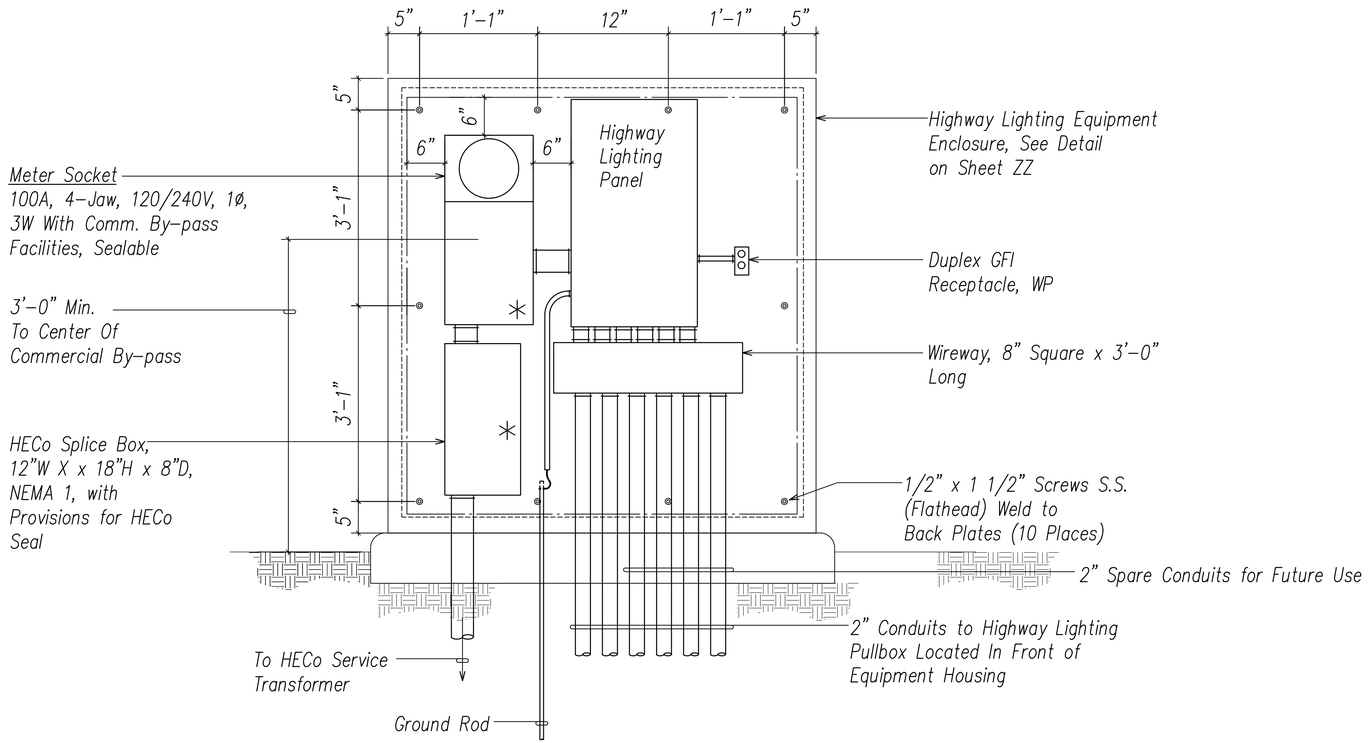

NOTES:

1. "*" Indicates Provisions for HECo Seals.
2. All Equipment Enclosure in Service Equipment Cabinet Shall be NEMA Type 1.
3. Contractor Shall Verify Equipment Enclosure Size to Ensure All Required Equipment Being Provided can fit Within Enclosure as Required.
4. Provide and Maintain 4' Clear and Level Space in Front of Cabinet.
5. Ground and Bond per NEC.

A / 89 **STREET LIGHTING EQUIPMENT ELEVATION**
Not to Scale

ORIGINAL PLAN
NOTE BOOK

SURVEY PLOTTED BY _____ DATE
DRAWN BY CAD
TRACED BY _____
DESIGNED BY MP
QUANTITIES BY _____
CHECKED BY JS
No. _____

Z:\ACAD\PROJECTS\225076\E89_225076_Cabinet Elev.dwg 09/21/26 - 4:40pm MPetner

RONALD N. S. HO & ASSOC., INC.
Electrical Engineers

LENSON J. SANTOS
LICENSED PROFESSIONAL ENGINEER
No. 14286-E
HAWAII, U.S.A.

THIS WORK WAS PREPARED BY ME OR UNDER MY SUPERVISION AND CONSTRUCTION OF THIS PROJECT WILL BE UNDER MY OBSERVATION AS DEFINED IN HAR TITLE 16, CHAPTER 115, RULES OF THE BOARD OF PROFESSIONAL ENGINEERS, ARCHITECTS AND SURVEYORS. STATE OF HAWAII

APRIL 30, 2028
LIC. EXP. DATE

STATE OF HAWAII
DEPARTMENT OF TRANSPORTATION
HIGHWAYS DIVISION

STREET LIGHTING EQUIPMENT ELEVATION

HILO BAYFRONT HIGHWAY
Intersection Improvements at Waianuenue Avenue
Federal Aid Project No. NH-019-2(076)

Scale: As Noted Date: Sept. 2026

SHEET No. 18 OF 25 SHEETS

FED. ROAD DIST. NO.	STATE	FED. AID PROJ. NO.	FISCAL YEAR	SHEET NO.	TOTAL SHEETS
HAWAII	HAW.	NH-019-2(076)	2026	90	106

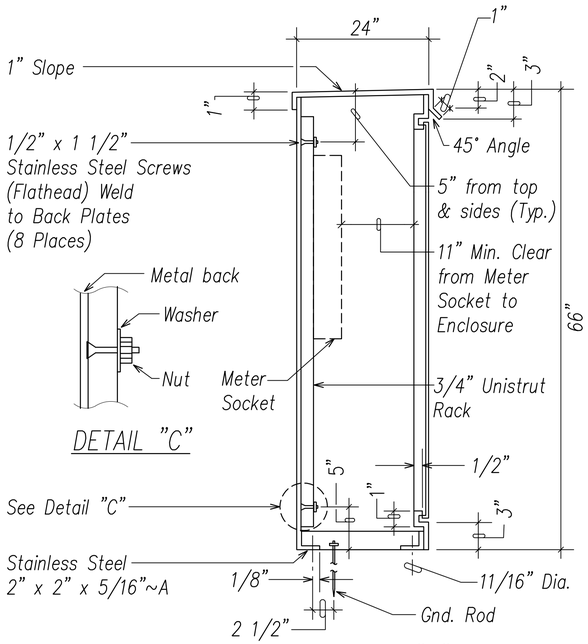

DETAIL "C"

SECTION "A"

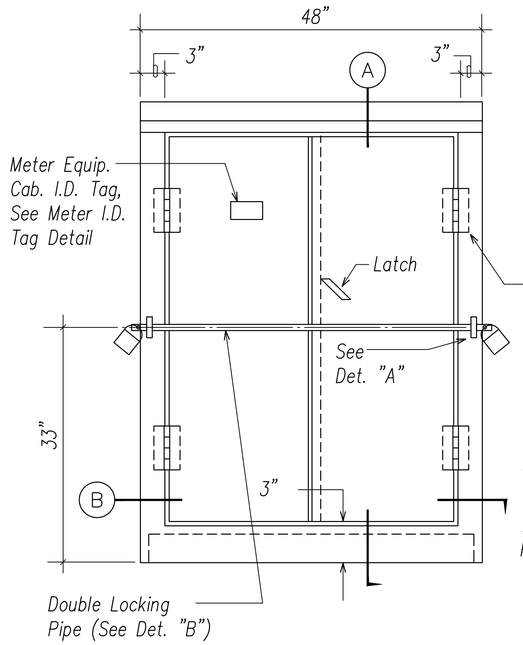

ELEVATION

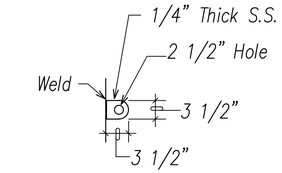

DETAIL "A"
SIDE VIEW

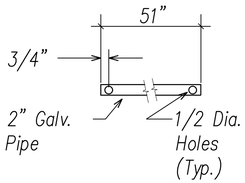

DETAIL "B"

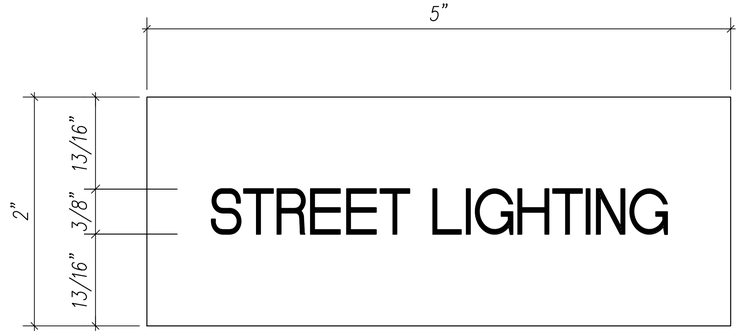

NOTES:

1. Use 3-ply laminated flexible plastic, black-white-black thickness: black cap sheet - 0.010", white base sheet - 0.052", black base sheet - 0.010".
2. Attach to meter enclosure using Scotch 3 brand very high bond (VHB) double coated acrylic foam tape or equivalent.
3. Letters/numbers shall be 3/8" high, 1/16" stroke (white in color).
4. Letters/numbers area inscribed by cutting through "black cap sheet" to expose white letters/numbers.

B
90

METER ID TAG DETAIL

Not to scale

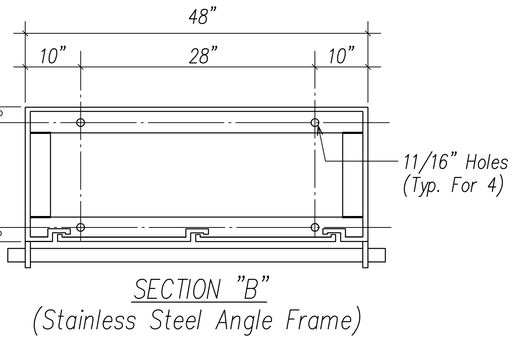

SECTION "B"
(Stainless Steel Angle Frame)

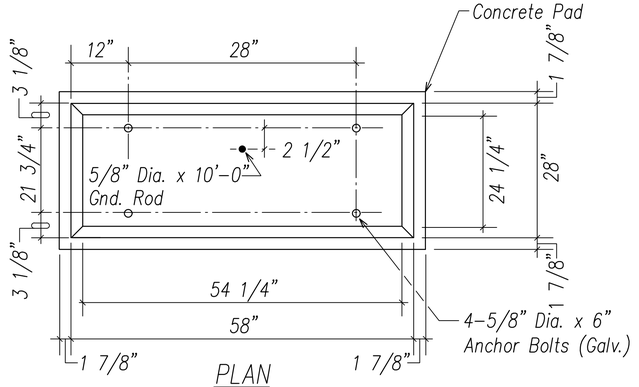

PLAN

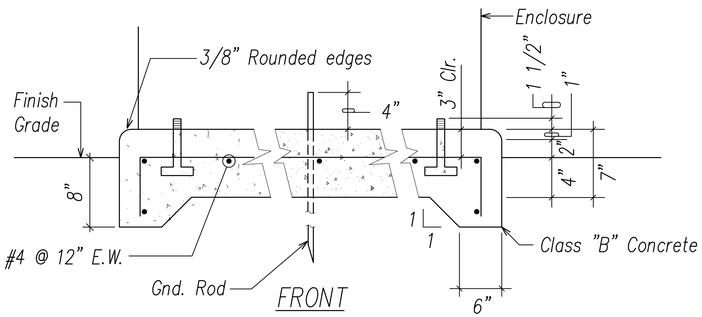

FRONT

CONCRETE PAD

Notes:

1. Cabinet to be primed with one coat shop primer.
2. Made from 10 gauge Type 316 Stainless Steel.
3. Provide epoxy enamel finish, color shall be Munsell 7GY3.29/1.5 Green (two coats). The Munsell color notation is specified in ASTM D 1535.
4. Enclosure shall be NEMA 3R with neoprene gasketing.
5. Padlocks:
   1 - HECo furnished
   1 - Contractor furnished
6. Shop fabrication drawings shall be submitted for approval.
7. Add additional Gnd Rod as required if gnd resistance exceeds 25 ohms (max allowed).
8. Maintain 4'-0" min. clearance fronting cabinet door, unless indicated otherwise.

A
90

STREET LIGHTING EQUIPMENT ENCLOSURE

Not to Scale

ORIGINAL PLAN
NOTE BOOK

		DATE
SURVEY PLOTTED BY		
DRAWN BY	CAD	
TRACED BY	MP	
DESIGNED BY		
QUANTITIES BY	JS	
CHECKED BY		

No.

Z:\ACAD\PROJECTS\225076\E90_225076_Cabinet Det01.dwg 09/21/26 - 4:40pm MPetner

RONALD N. S. HO & ASSOC., INC.
Electrical Engineers

JENSON J. SANTOS
LICENSED PROFESSIONAL ENGINEER
No. 14286-E
HAWAII, U. S. A.

THIS WORK WAS PREPARED BY ME OR UNDER MY SUPERVISION AND CONSTRUCTION OF THIS PROJECT WILL BE UNDER MY OBSERVATION AS DEFINED IN HAR TITLE 16, CHAPTER 115, RULES OF THE BOARD OF PROFESSIONAL ENGINEERS, ARCHITECTS AND SURVEYORS. STATE OF HAWAII

APRIL 30, 2028
LIC. EXP. DATE

STATE OF HAWAII
DEPARTMENT OF TRANSPORTATION
HIGHWAYS DIVISION

STREET LIGHTING EQUIPMENT CABINET DETAIL
HILO BAYFRONT HIGHWAY
Intersection Improvements at Waianuenue Avenue
Federal Aid Project No. NH-019-2(076)

Scale: As Noted Date: Sept. 2026

SHEET No. 19 OF 25 SHEETS

FED. ROAD DIST. NO.	STATE	FED. AID PROJ. NO.	FISCAL YEAR	SHEET NO.	TOTAL SHEETS
HAWAII	HAW.	NH-019-2(076)	2026	91	106

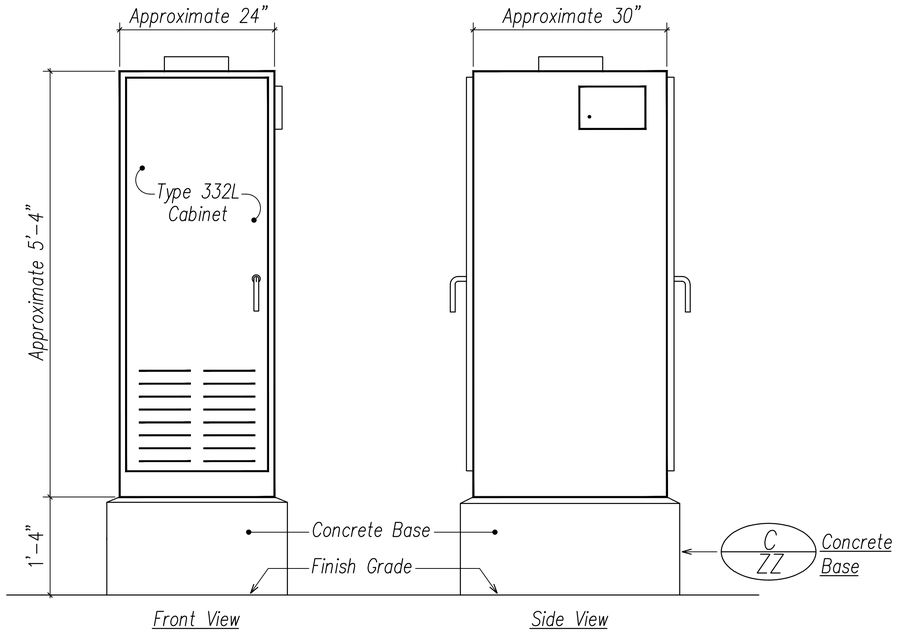

A/91 TYPE 332 CABINET DETAIL
Not to Scale

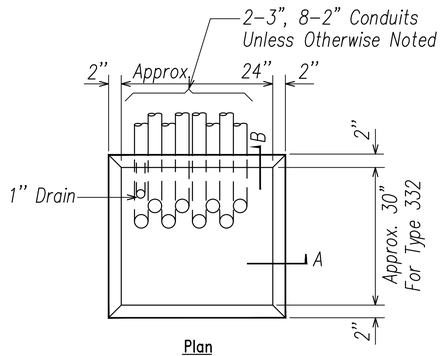

Plan

NOTES:

1. Concrete Shall Be Class "B".
2. Dimensions Shall Be Altered To Suit Controller Cabinet Actually Furnished.
3. Conduit Bends And Drain Are Incidental To Concrete Base.
4. Refer To Cabinet Manufacturer's Specifications For Details Of Anchor Bolts And Base Setting.
5. All Exposed Surfaces Of Concrete Base Shall Be Given A Class 2, Rubbed Finish.
6. 2'-0" Min. Concrete Landing Area To Be Provided In Area Fronting Both Doors.

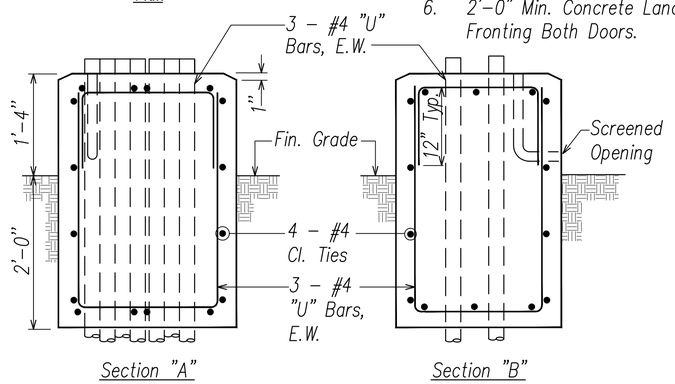

C/91 TYPE "D" CONCRETE BASE DETAIL
Not to Scale

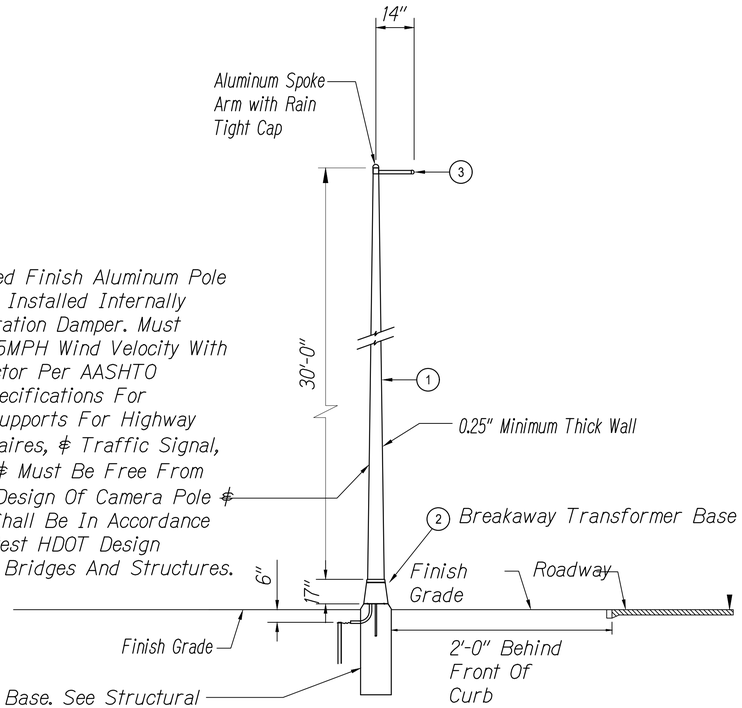

Satin Brushed Finish Aluminum Pole With Factory Installed Internally Mounted Vibration Damper. Must Withstand 145MPH Wind Velocity With 1.14 Gust Factor Per AASHTO Standard Specifications For Structural Supports For Highway Signs, Luminaires, & Traffic Signal, 5th Edition & Must Be Free From White Rust. Design Of Camera Pole & Spoke Arm Shall Be In Accordance With The Latest HDOT Design Criteria For Bridges And Structures.

MATERIAL LIST	
Item	Description
1	Pole, Alum
2	Transformer Base (Alum.) (Type As Indicated)
3	Spoke Arm, Alum

B/91 CCTV CAMERA POLE DETAIL
Not to Scale

RONALD N. S. HO & ASSOC., INC.
Electrical Engineers

JENSON J. SANTOS
LICENSED PROFESSIONAL ENGINEER
No. 14286-E
HAWAII, U.S.A.

THIS WORK WAS PREPARED BY ME OR UNDER MY SUPERVISION AND CONSTRUCTION OF THIS PROJECT WILL BE UNDER MY OBSERVATION AS DEFINED IN HAR TITLE 16, CHAPTER 115, RULES OF THE BOARD OF PROFESSIONAL ENGINEERS, ARCHITECTS AND SURVEYORS. STATE OF HAWAII

APRIL 30, 2028
LIC. EXP. DATE

STATE OF HAWAII
DEPARTMENT OF TRANSPORTATION
HIGHWAYS DIVISION

CCTV CABINET DETAILS

HILO BAYFRONT HIGHWAY
Intersection Improvements at Waianuenue Avenue
Federal Aid Project No. NH-019-2(076)

Scale: As Noted Date: Sept. 2026

SHEET No. 20 OF 25 SHEETS

91

ORIGINAL PLAN
NOTE BOOK
No.

		DATE
SURVEY PLOTTED BY		
DRAWN BY	CAD	
TRACED BY	MP	
DESIGNED BY		
QUANTITIES BY	JS	
CHECKED BY		

Z:\ACAD\PROJECTS\225076\E91_225076_CCTV Cabinet.dwg 09/21/26 - 4:39pm MPetner

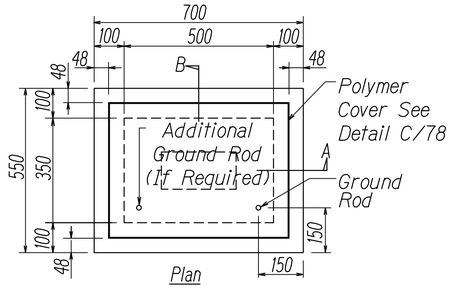

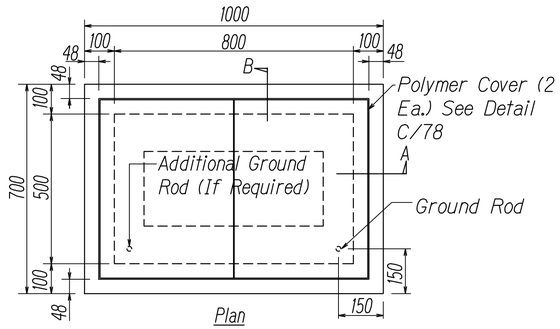

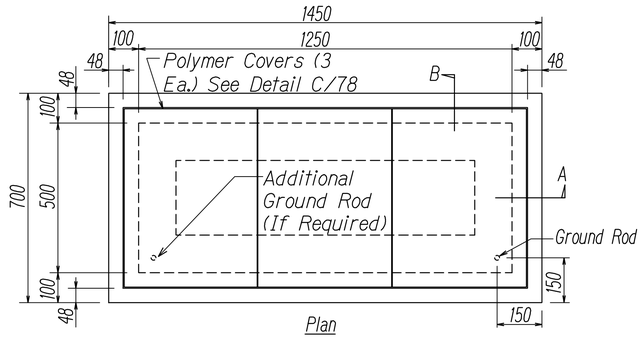

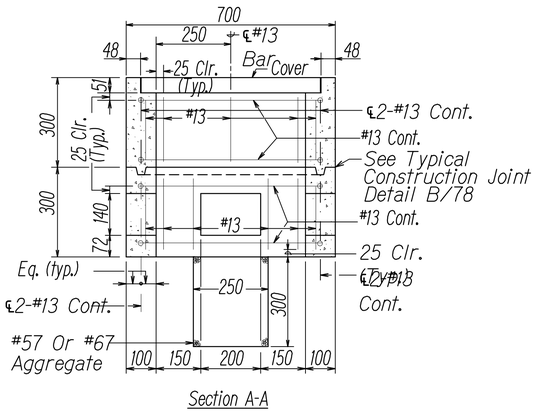

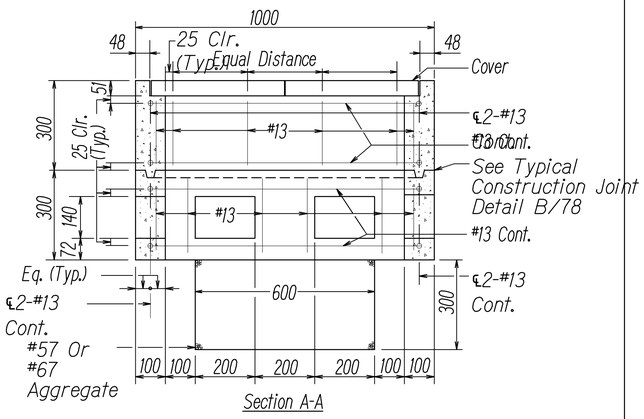

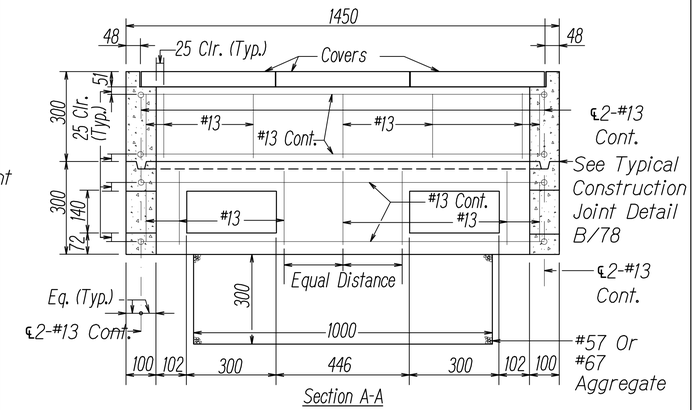

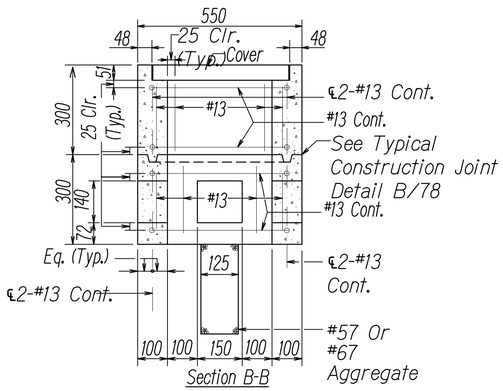

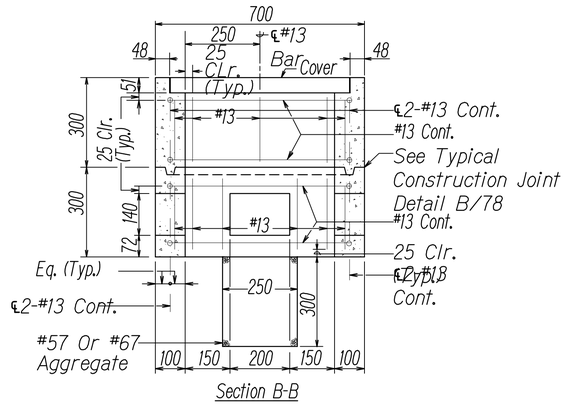

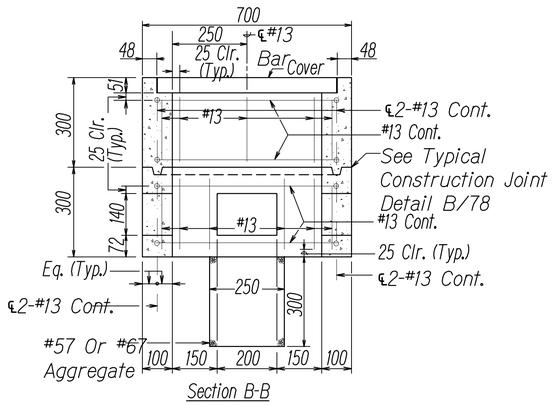

A
92

Type "A" Pullbox (Old Type "B")

Not To Scale

B
92

Type "B" Pullbox (Old Type "C")

Not To Scale

C
92

Type "C" Pullbox (Old Type "D")

Not To Scale

FED. ROAD DIST. NO.	STATE	FED. AID PROJ. NO.	FISCAL YEAR	SHEET NO.	TOTAL SHEETS
HAWAII	HAW.	NH-019-2(076)	2026	92	106

General Notes:

1. Provide A Minimum Of One 16 Dia. X 2.5m Copperweld Ground Rod In Each Pullbox. When Directed By The Traffic Signal Inspector/Street Light Inspector/ Engineer, Install Additional Ground Rods. Cost Of Ground Rods Shall Be Incidental To The Pullboxes.
2. All Pre-Cast Concrete Pullboxes Shall Be Manufactured In Two Pieces.
3. The Pullbox With Cover Shall Be Capable Of Supporting An MS 18 Loading.
4. The Maximum Weight Of The Pullbox Cover Shall Not Exceed 27 Kilograms.
5. The Openings For The Conduits On All Pullboxes Shall Be Pre-Cast Concrete Knockouts.
6. After Installing The Conduits In The Openings Of The Pullboxes, The Contractor Shall Fill The Excess Opening In The Pre-cast Knockouts With Concrete Mortar.
7. Prior To Installing The Pullboxes, The Contractor Shall Level The Bottom Of The Trench And Achieve A Minimum Of 95% Relative Compaction Of The Bottom Of The Trench.
8. All Concrete Shall Be Class "A" (25MPa Min.).
9. Rebars Shall Be Grade 300 And All Lapped Splices Shall Be 360mm Minimum.
10. The #57 Or #67 Size Aggregate Shall Conform To Latest Version Of AASHTO M43 (ASTM D 448).
11. Pullboxes Shall Be Installed In A Location Protected From Vehicular Traffic (i.e. Raised Sidewalk, Behind A.C. Curbs, Traffic Signal/Street Light Standard Or Pipe Guards).

All Dimensions Are In Millimeters Unless Otherwise Indicated

RONALD N. S. HO & ASSOC., INC.
Electrical Engineers

JENSON J. SANTOS
LICENSED PROFESSIONAL ENGINEER
No. 14286-E
HAWAII, U. S. A.

THIS WORK WAS PREPARED BY ME OR UNDER MY SUPERVISION AND CONSTRUCTION OF THIS PROJECT WILL BE UNDER MY OBSERVATION AS DEFINED IN HAR TITLE 16, CHAPTER 115, RULES OF THE BOARD OF PROFESSIONAL ENGINEERS, ARCHITECTS AND SURVEYORS. STATE OF HAWAII

APRIL 30, 2028
LIC. EXP. DATE

STATE OF HAWAII
DEPARTMENT OF TRANSPORTATION
HIGHWAYS DIVISION

PULLBOX & HANDHOLE DETAILS 1

HILO BAYFRONT HIGHWAY
Intersection Improvements at Waianuenue Avenue
Federal Aid Project No. NH-019-2(076)

Scale: As Noted Date: Sept. 2026

SHEET No. 21 OF 25 SHEETS

ORIGINAL PLAN
NOTE BOOK
No.

		DATE
SURVEY PLOTTED BY	CAD	
DRAWN BY		
TRACED BY	MP	
DESIGNED BY		
QUANTITIES BY		
CHECKED BY	JS	

Z:\ACAD\PROJECTS\225076\E92_225076_PB HH Details 1.dwg 09/21/26 - 4:39pm MPetner

FED. ROAD DIST. NO.	STATE	FED. AID PROJ. NO.	FISCAL YEAR	SHEET NO.	TOTAL SHEETS
HAWAII	HAW.	NH-019-2(076)	2026	93	106

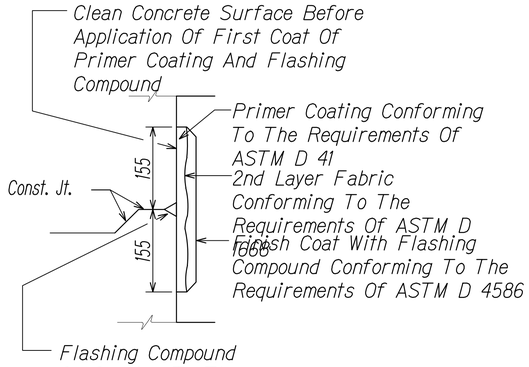

A / 93 **Typical Flashing Compound Waterproofing Details**

Not To Scale

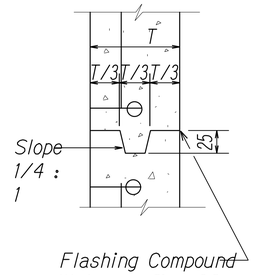

B / 93 **Typical Construction Joint Detail**

Not To Scale

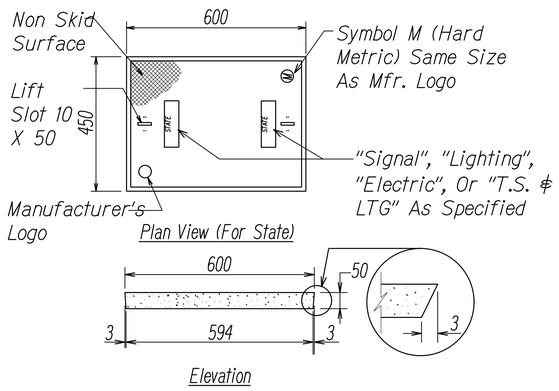

C / 93 **Polymer Concrete Cover**

Not To Scale

All Dimensions Are In Millimeters Unless Otherwise Indicated

RONALD N. S. HO & ASSOC., INC.
Electrical Engineers

JENSON J. SANTOS
LICENSED PROFESSIONAL ENGINEER
No. 14286-E
HAWAII, U.S.A.

THIS WORK WAS PREPARED BY ME OR UNDER MY SUPERVISION AND CONSTRUCTION OF THIS PROJECT WILL BE UNDER MY OBSERVATION AS DEFINED IN HAR TITLE 16, CHAPTER 115, RULES OF THE BOARD OF PROFESSIONAL ENGINEERS, ARCHITECTS AND SURVEYORS. STATE OF HAWAII

APRIL 30, 2028
LIC. EXP. DATE

STATE OF HAWAII
DEPARTMENT OF TRANSPORTATION
HIGHWAYS DIVISION

PULLBOX & HANDHOLE DETAILS 2

HILO BAYFRONT HIGHWAY
Intersection Improvements at Waianuenue Avenue
Federal Aid Project No. NH-019-2(076)

Scale: As Noted Date: Sept. 2026

SHEET No. 22 OF 25 SHEETS

93

ORIGINAL PLAN
NOTE BOOK
No.

SURVEY PLOTTED BY
DRAWN BY CAD
TRACED BY
DESIGNED BY MP
QUANTITIES BY
CHECKED BY JS
DATE

Z:\ACAD\PROJECTS\225076\E93_225076_PB HH Details 2.dwg 09/21/26 - 4:37pm MPetner

FED. ROAD DIST. NO.	STATE	FED. AID PROJ. NO.	FISCAL YEAR	SHEET NO.	TOTAL SHEETS
HAWAII	HAW.	NH-019-2(076)	2026	94	106

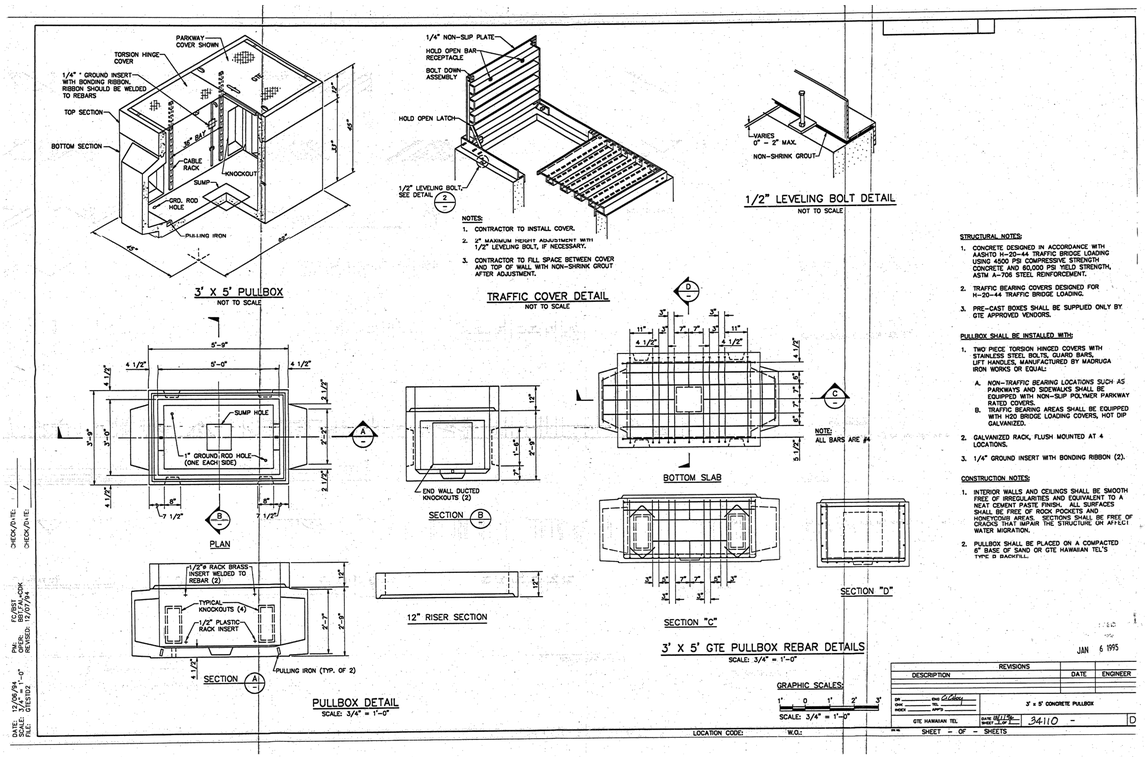

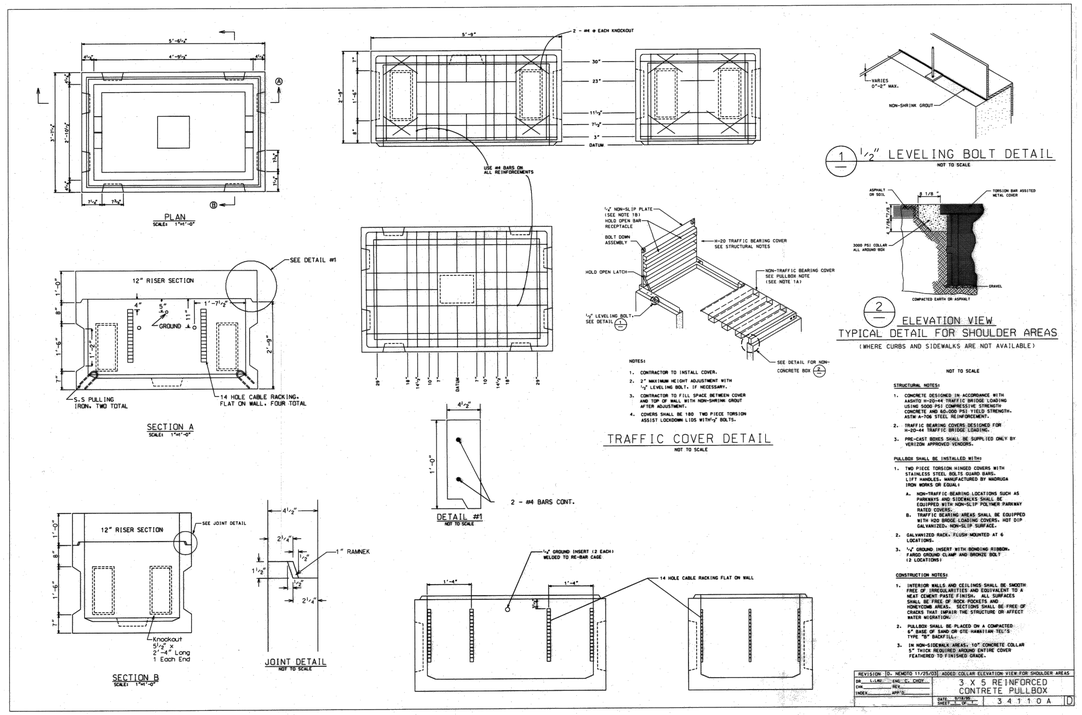

ORIGINAL PLAN | SURVEY PLOTTED BY CAD | DRAWN BY | TRACED BY MP | DESIGNED BY | QUANTITIES BY JS | CHECKED BY | DATE | NOTE BOOK | No.

Z:\ACAD\PROJECTS\225076\E94_225076_PB HH Details 3.dwg 09/21/26 - 4:36pm MPetner

A / 94

3'-0" x 5'-0" TELECOM HANDHOLE

Not To Scale

RONALD N. S. HO & ASSOC., INC.
Electrical Engineers

JENSON J. SANTOS
LICENSED PROFESSIONAL ENGINEER
No. 14286-E
HAWAII, U.S.A.

THIS WORK WAS PREPARED BY ME OR UNDER MY SUPERVISION AND CONSTRUCTION OF THIS PROJECT WILL BE UNDER MY OBSERVATION AS DEFINED IN HAR TITLE 16, CHAPTER 115, RULES OF THE BOARD OF PROFESSIONAL ENGINEERS, ARCHITECTS AND SURVEYORS. STATE OF HAWAII

APRIL 30, 2028
LIC. EXP. DATE

STATE OF HAWAII
DEPARTMENT OF TRANSPORTATION
HIGHWAYS DIVISION

PULLBOX & HANDHOLE DETAILS 3

HILO BAYFRONT HIGHWAY

Intersection Improvements at Waianuenue Avenue

Federal Aid Project No. NH-019-2(076)

Scale: As Noted Date: Sept. 2026

SHEET No. 23 OF 25 SHEETS

FED. ROAD DIST. NO.	STATE	FED. AID PROJ. NO.	FISCAL YEAR	SHEET NO.	TOTAL SHEETS
HAWAII	HAW.	NH-019-2(076)	2026	95	106

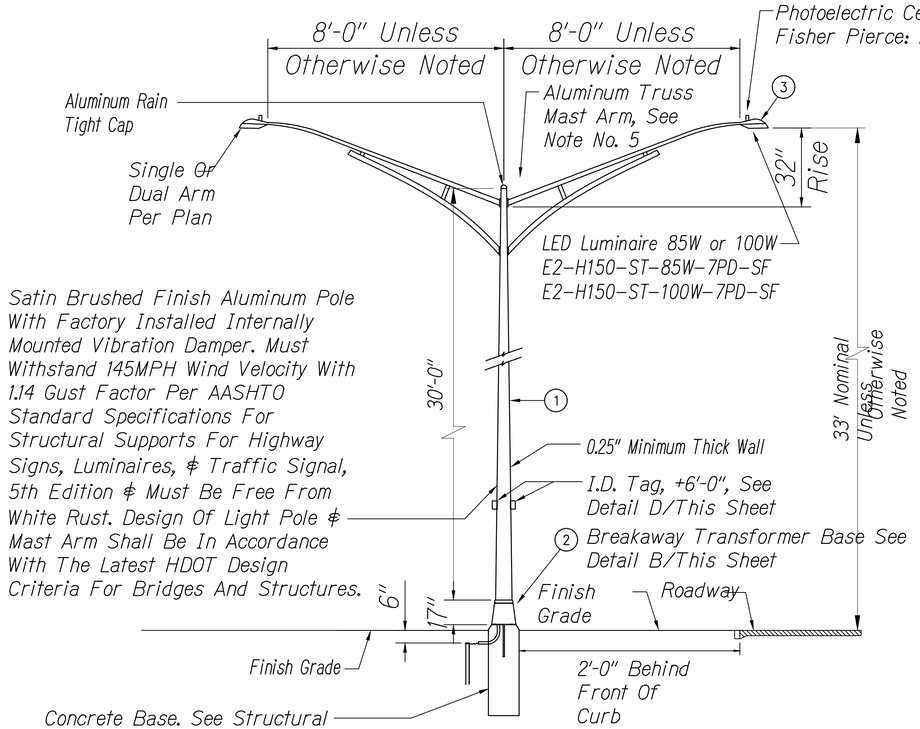

A / 95 **Street Light Standard Detail**
Not To Scale

Notes:

1. For Wiring Within Transformer Base, See Typical Transformer Base Detail On State DOT Standard Plan TE-47.
2. For 4' - 8' Bracket Arms, Use Elliptical Bracket Arm. For 10' - 15' Bracket Arms, Use Aluminum Truss Bracket Arm.

MATERIAL LIST	
Item	Description
1	Light Pole, Alum
2	Transformer Base (Alum.) (Type As Indicated)
3	Luminaire, LED, Unless Otherwise Noted

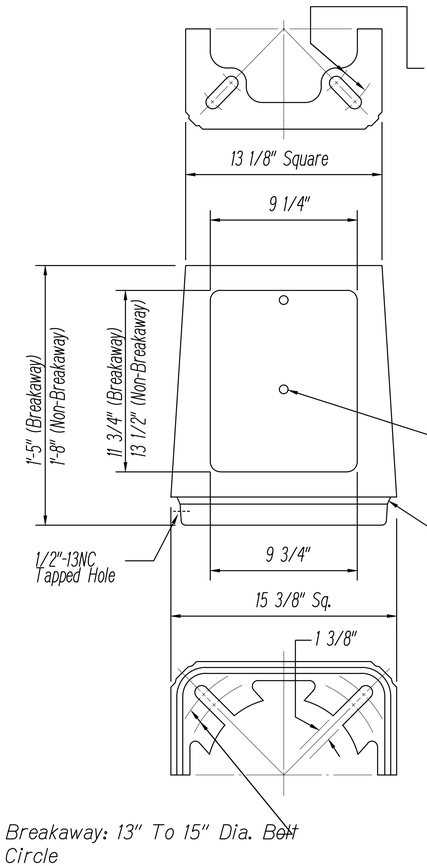

Breakaway: 10 1/2" To 13 1/2" Dia. Bolt Circle

Non-Breakaway: 11" To 13" Dia. Bolt Circle

Akron Foundry

Breakaway: TB1-AF 1315-17 I.W. Or Equal (Plus Hardware)

Non-Breakaway: TB1-AF 1315 I.W. OR EQUAL (Plus Hardware)

Material: Alum. Alloy 356-T6

Base Shall Be Supplied With:

1. Door And 1/4"-20NC S.S. Screws.
2. Eight 1" Washers 1/2" Thick x 2 3/4" O.D. (washers Mechanical Galvanized Per ASTM A153 Or ASTM B454).
3. Four 1"-8NC x 3 3/4" Long Galvanized Steel Hex. Hd. Bolts.
4. Four 1"-8nc Galvanized Steel Hex. Nuts.
5. Four 1" Galvanized Stl. Lock Washers.
6. Four 1" X 2" O.D. Galvanized Stl. Flatwashers.

B / 95 **Transformer Base Detail**
Not To Scale

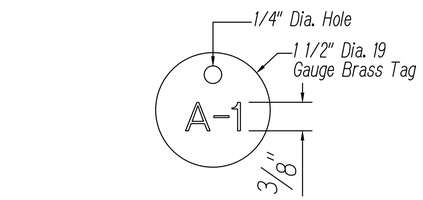

Notes:

1. Number Size Shall Be 3/8" High And Punched On Brass Tag.
2. Attached To Circuit Cables With Nylon Weather Resistant Locking Cables Ties, 3/16" Wide.

C / 95 **Highway Light Circuit Cable I.D. Tag Detail**
Not To Scale

Notes:

1. Use 3 Ply Laminated Flexible Plastic Black-White-Black Thickness Black Cap Sheet-0.010", White Base Sheet-0.052", Black Base Sheet-0.010".
2. Light Pole Number Size Shall Be 1" High And Engraved 1/8" Wide, White In Color (Number As Required).
3. Nomenclature Size Shall Be 5/16" High and Engraved 1/32" Wide, White In Color (HECO Meter Number Panel Board And Circuit Number, Line Voltage, Lamp Data And Refractor Data As Required).
4. Attach To Aluminum And Steel Post With No. 8 Stainless Steel, 1/2" Long Drive Screws In 1/8" Drill Hole. Attach To Wood Poles With 4D Aluminum Nail.
5. Numbers Are Inscribed By Cutting Through "Black Cap Sheet" To Expose "White Letters."
6. Nomenclature Required For Systems With Two Or More Circuits (Letter Indicates Panel Board, Number Indicates Circuit).
7. For Light Poles Installed On Ramp, Assign Numbers To Include Ramp I.D. And Light Number. Legend May Be Less Than One (1) Inch In Height.
8. Light Numbers Shall Be Obtained From The State. Use An Alphabet Suffix To Designate Lights Mounted On The Same Pole (e.g. 123A & 123B).
9. For Non-Metered System, Call Out The Contract Number.

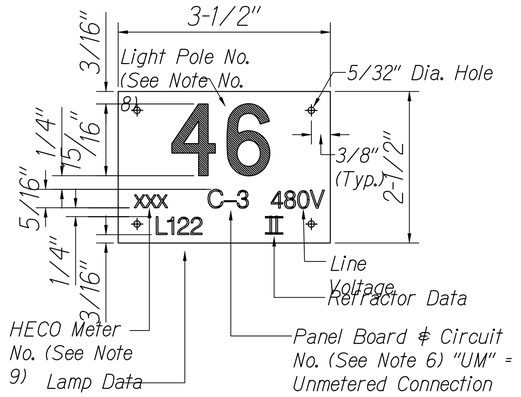

D / 95 **Street Light I.D. Tag Detail**
Not To Scale

RONALD N. S. HO & ASSOC., INC.
Electrical Engineers

JENSON J. SANTOS
LICENSED PROFESSIONAL ENGINEER
No. 14286-E
HAWAII, U. S. A.

THIS WORK WAS PREPARED BY ME OR UNDER MY SUPERVISION AND CONSTRUCTION OF THIS PROJECT WILL BE UNDER MY OBSERVATION AS DEFINED IN HAR TITLE 16, CHAPTER 115, RULES OF THE BOARD OF PROFESSIONAL ENGINEERS, ARCHITECTS AND SURVEYORS. STATE OF HAWAII

APRIL 30, 2028
LIC. EXP. DATE

STATE OF HAWAII
DEPARTMENT OF TRANSPORTATION
HIGHWAYS DIVISION

STREET LIGHT DETAILS

HILO BAYFRONT HIGHWAY
Intersection Improvements at Waianuenue Avenue
Federal Aid Project No. NH-019-2(076)

Scale: As Noted Date: Sept. 2026

SHEET No. 24 OF 25 SHEETS

ORIGINAL PLAN
NOTE BOOK

		DATE
SURVEY PLOTTED BY		
DRAWN BY	CAD	
TRACED BY		
DESIGNED BY	MP	
QUANTITIES BY		
CHECKED BY	JS	

No.

Z:\ACAD\PROJECTS\225076\E95_225076_Street Light Detail.dwg 09/21/26 - 4:35pm MPetner

FED. ROAD DIST. NO.	STATE	FED. AID PROJ. NO.	FISCAL YEAR	SHEET NO.	TOTAL SHEETS
HAWAII	HAW.	NH-019-2(076)	2026	96	106

New Design Requirements for Luminaires, Pole Standards, Traffic Signal Standards
(January 8, 2018)

(Highway Lighting Luminaires, Pole Standards, Bracket Arms and Traffic Signal Standards and Mast Arms Being Furnished for this Project Shall Conform with the New Design Requirements Noted Below)

1. *Equipment Manufacturers Providing Structural Supports for Luminaires and Traffic Signals, the Following Design Parameters to be Included in the Design of the Project Materials.*

2. *The Latest American Association of State Highway and Transportation Officials (AASHTO) Standard Specifications For Structural Supports For Highway Signs, Luminaires and Traffic Signals, and Its Interim Supplements and Modifications By The Highway Division, Department of Transportation State of Hawaii (HDOT), As Modified Herein.*

3. *Latest HDOT Memorandum With Subject Title "Design Criteria For Bridges and Structures", As Modified Herein.*

4. *Basic Wind Speed [Article 3.8.2] to Determine the Design Wind Pressure Shall be 145 MPH. For Unusual or Differing Exposure Conditions, the Basic Wind Speed Should be Increased Using Rational Procedures and Sound Engineering Judgment. Alternatively, the Design Wind Pressure May be Increased by Using a Higher Wind Importance Factor [Table 3.8.3-1] Corresponding to a Recurrence Interval of At Least One Level Greater Than Recommended. The Wind Maps for Effective Wind Speed, Topographic Effects and Exposure Category Included in the State Building Code (Hawaii Administrative Rules, Chapter 3-180) Should be Used for Guidance.*

5. *Wind Importance Factors [Article 3.8.3-1] and Velocity Conversion Factors [Table 3.8.3-3] Used to Determine the Design Wind Pressure Shall be Based on the Following Recurrence Intervals:*

   A. *For Overhead Sign Structures: 1700 Years*
   B. *For Traffic Signal Structures: 1700 Years*
   C. *For Luminaire Support Structures Less Than 50 Feet in Height: 25 Years*
   D. *For Other Support Structures Including Luminaire Support Structures 50 Feet or More in Height, and When Luminaire is Mounted on a Traffic Signal Structure: 50 Years*
   E. *For Roadside Sign Structures and Temporary Support Structures: 10 Years*

5. *Height and Exposure Factor [Article 3.8.4]. for Support Structures on Bridges, the Height and Exposure Factor Shall be Determined Based on the Maximum Height They Are Above the Surrounding Ground. For Severe Exposure Conditions Such as Along the Coastline, the Factor Shall be Increased Based on the Latest ASCE Standard ASCE/SEI 7, Minimum Design Loads for Buildings and Other Structures. the Wind Maps for Effective Wind Speed, Topographic Effects and Exposure Category Included in the State Building Code (Hawaii Administrative Rules, Chapter 3-180) Should Also be Used for Guidance.*

6. *Minimum Anchor Bolts [Article 5.16]. Cantilevered Traffic Signal Structures With Mast Arms Greater Than 40 Feet and Other Cantilevered Support Structures with Design Life of 50 Years or More Shall Have Base Plate Connections with a Minimum of Six (6) Anchor Bolts. A Minimum of Four (4) Anchor Bolts Shall be Provided for All Other Base Plate Connections.*

7. *Use of Grout [Article 5.16]. Grout Shall Not be Used Under Base Plates for All Support Structures Except for Ordinary Street Light Poles Unless Approved by the Bridge Design Engineer. Anchor Bolts with Leveling Nuts Shall be Designed to Transfer All Loads From the Structure to Its Base Support. a Wire Cloth Screen Shall Specified to be Placed Vertically Between the Base Plate and the Top of the Foundation and Wrapped Horizontally Around the Base Plate with a 3 Inches Minimum Lap. The Wire Cloth Shall be Galvanized Steel Standard Grade Plain Weave 2x2 Mesh 0.063 inch Diameter Wires. Secure the Wire Cloth At the Lapped Ends With Stainless Steel Wire Ties (Min 2). Loop the Wire Ties and Twist Tie Them Securely. Also, Alternate Means of Protecting the Underside of the Base Plate From Debris, Birds, Bees and Other Nesting Animals May be Proposed for Consideration.*

8. *Plumbness of Anchor Bolts [Article 5.16]. Anchor Bolts Shall be Installed with Misalignments of Less Than 1:40 From Vertical. After Installation, Firm Contact Shall Exist Between the Anchor Bolt Nuts, Washers, and Base Plate on Any Anchor Bolt Installed in a Misaligned Position.*

9. *Fatigue Importance Factors [Article 11.6] Noted in Table 11.6-1 for Overhead Sign and Traffic Signal Structures Shall be Based on Fatigue Category I.*
Support Structures Other Than That Noted in Table 11.6-1 with Round Cross Sections Under 50 Feet, Roadside Sign Structures, and Temporary Structures Do Not Need to be Designed for Fatigue. Support Structures 50 Feet or More in Height Shall be Designed for Fatigue and be Based on Fatigue Category I.

10. *Galloping [Article 11.7.1.1]. Provisions Shall be Made to Install Effective Vibration Mitigation Devices on Overhead Cantilevered Sign and Traffic Signal Support Structures Unless They Are Designed for Galloping-Induced Cyclic Loads. With Approval from HDOT, Mitigation Devices May be Installed after Construction If Vibration Due to Galloping is Identified.*

11. *Natural Wind Gust [Article 11.7.1.2]. Overhead Sign, Traffic Signal, and High-Level Support Structures Shall be Designed to Resist An Equivalent Static Natural Wind Gust Pressure.*

12. *Truck-Induced Gust [Article 11.7.1.3]. Overhead Sign and Traffic Signal Support Structures Shall be Designed to Resist An Equivalent Static Truck Gust Pressure Range Based on a Truck Speed of 20 MPH Over the Posted Speed.*

13. *Equipment Manufacturers Providing Structural Supports for Luminaires and Traffic Signals, is Responsible to Provide the Engineer with Any Information That Will Impact the Current Foundation Design.*

14. *Square or Rectangular Steel Post Sections [Sections 5 and 11]. Square or Rectangular Steel Sections Are Not Recommended to be Used for Overhead Sign and Traffic Signal Supports Because They Are More Prone to Poor Fatigue Performance. However, the Post Sections Contained in the Highways Division Standard Plans (2008) for Overhead Sign Structures (Standard Plans TE-17A Through TE-19M) Shall be Considered Acceptable and May Still be Used. Any Special Designs or Deviations from the Standard Plans Shall be Considered with the Bridge Design Engineer.*

15. *Traffic Signs on Light Poles and Traffic Signals. All Light Poles of Highway Light Standards Shall be Designed for a Traffic Sign of Nine (9) SF with its Resulting Wind Force Applied 10 Feet Above the Finish Grade. See Standard Plan TE-47 (5/21/07).*

RONALD N. S. HO & ASSOC., INC.
Electrical Engineers

JENSON J. SANTOS
LICENSED PROFESSIONAL ENGINEER
No. 14286-E
HAWAII, U. S. A.

THIS WORK WAS PREPARED BY ME OR UNDER MY SUPERVISION AND CONSTRUCTION OF THIS PROJECT WILL BE UNDER MY OBSERVATION AS DEFINED IN HAR TITLE 16, CHAPTER 115, RULES OF THE BOARD OF PROFESSIONAL ENGINEERS, ARCHITECTS AND SURVEYORS. STATE OF HAWAII

APRIL 30, 2028
LIC. EXP. DATE

STATE OF HAWAII
DEPARTMENT OF TRANSPORTATION
HIGHWAYS DIVISION

STREET LIGHT NOTES

HILO BAYFRONT HIGHWAY
Intersection Improvements at Waianuenue Avenue
Federal Aid Project No. NH-019-2(076)

Scale: As Noted *Date: Sept. 2026*

SHEET No. 25 OF 25 SHEETS

ORIGINAL PLAN
NOTE BOOK
SURVEY PLOTTED BY
DRAWN BY CAD
TRACED BY
DESIGNED BY MP
QUANTITIES BY
CHECKED BY JS
No. DATE

Z:\ACAD\PROJECTS\225076\E96_225076_Design Notes.dwg 09/21/26 – 4:34pm MPetner

FED. ROAD DIST. NO.	STATE	FED. AID PROJ. NO.	FISCAL YEAR	SHEET NO.	TOTAL SHEETS
HAWAII	HAW.	NH-019-2(076)	2026	97	106

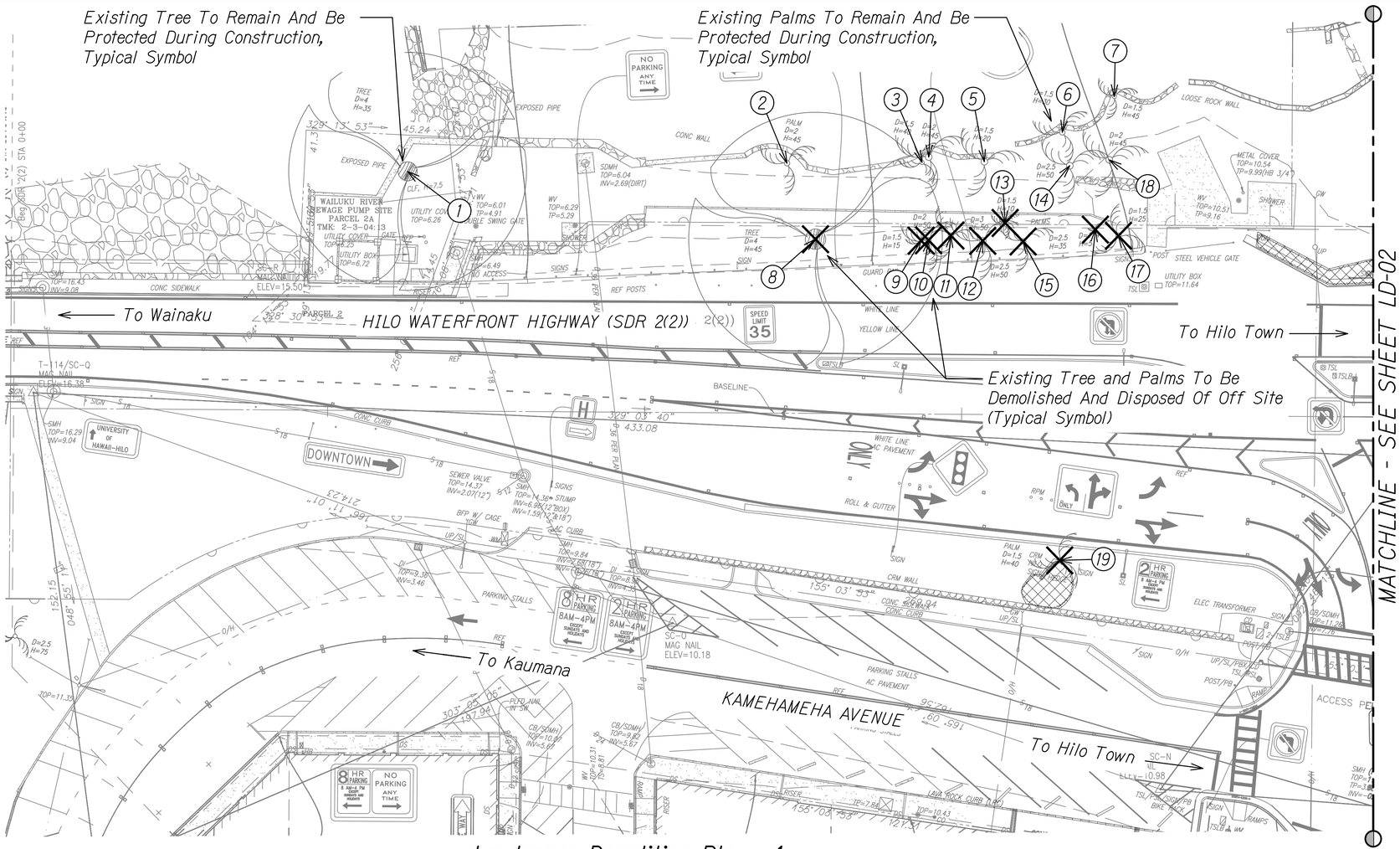

Legend

- Existing Trees To Remain And Be Protected During Construction Operations
- Existing Trees To Be Demolished And Disposed Of Off Site
- Existing Hedge To Be Demolished And Disposed Of Off Site (Typical Symbol)
- (1) Tree Disposition Call-out (Refer to sheet LD-03 for Tree Disposition list)

Landscape Demolition Plan - 1

Scale: 1"=20'

NORTH

0 1 3 5 feet

SCALE: 1" = 20'

Notes:

1. Prior to the start of work, verify the extent of landscape demolition to accommodate work under this contract. Additional removal, patching, and restoration shall be considered incidental to the work.
2. To protect the White Tern and Hawaiian Hoary Bat habitats during construction, Contractor shall take special care when trimming, relocating, or removing trees on the project site. Woody plants greater than 15-feet in height must not be disturbed, trimmed, or removed during the White Tern nesting and fledging season, and the June 1 through September 15 Hawaiian Hoary Bat birthing and pup rearing season. Tree removal is restricted to the fall and early winter. Trees must be inspected prior to trimming or removal, and if there are signs that White Terns may be nesting or that Hawaiian Hoary Bats may be roosting in a tree, trimming or removal of the tree must be delayed until the White Tern chicks have fully fledged, or the Hawaiian Hoary Bats have finished roosting.
3. Demolition of trees and palms includes removal of rootball, buttress roots, and surrounding roots 1-1/2" and larger to minimum depth of 18" below grade. Unless otherwise specified, surrounding roots shall be removed to a minimum depth of 12" below adjacent ground level.
4. Remove roots only where removal does not damage existing structures, pavements, or utilities to remain. If investigation indicates that roots to be removed may affect or surround such features to remain, expose the roots by hand excavation, air-spade pneumatic excavator, or similar. Do not rip out roots with a backhoe or similar equipment. The roots shall then be cut and removed, being careful not to damage the features to remain. Work shall be done under the direct supervision of a certified arborist.

ORIGINAL PLAN
NOTE BOOK
SURVEY PLOTTED BY: DATE:
DRAWN BY:
TRACED BY:
DESIGNED BY:
QUANTITIES BY:
CHECKED BY:
No.

PLOT DATE: Sep 18, 2026 @ 10:39 am
LAST UPDATE: Jun 10, 2026 @ 09:06 am
PATH/FILENAME: C:\Users\$mgershman$\appdata\Roaming\Autodesk\ACAD\2026\R24.0\enu\Support\Block\Temp\$AcPublish_2708\LD-01 and LD-02.dwg

MARC K. SHIMATSU
LICENSED PROFESSIONAL LANDSCAPE ARCHITECT
No. 13602
HAWAII, U.S.A.

LICENSE EXPIRES 4/30/28

THIS WORK WAS PREPARED BY ME OR UNDER MY SUPERVISION

STATE OF HAWAII
DEPARTMENT OF TRANSPORTATION
HIGHWAYS DIVISION

LANDSCAPE DEMOLITION PLAN - 1

HILO BAYFRONT HIGHWAY
Intersection Improvements at Waianuenue Avenue
Federal Aid Project No. NH-019-2(076)

Scale: 1" = 20'-0" Date: Sep. 2026

SHEET No. LD-01 OF 05 SHEETS

FED. ROAD DIST. NO.	STATE	FED. AID PROJ. NO.	FISCAL YEAR	SHEET NO.	TOTAL SHEETS
HAWAII	HAW.	NH-019-2(076)	2026	98	106

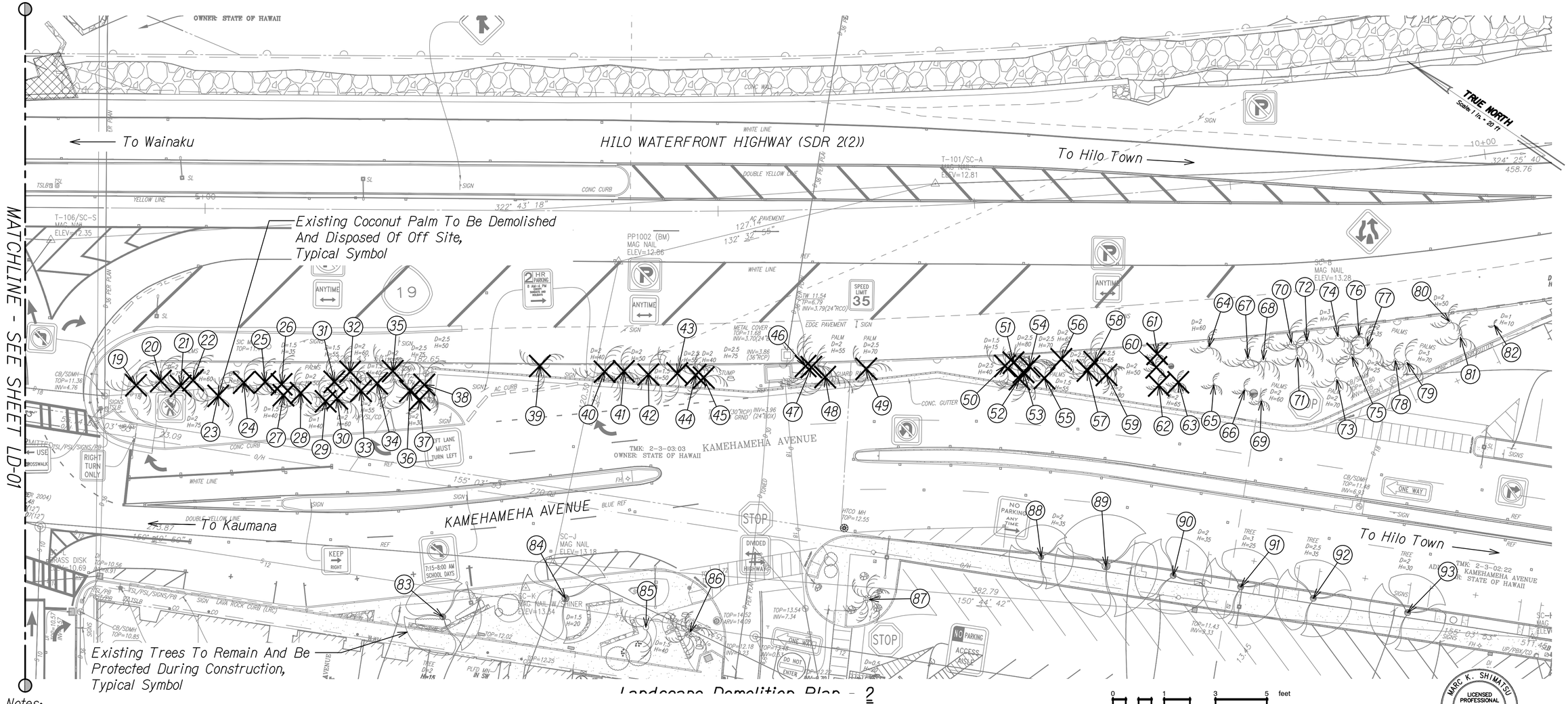

Notes:

1. Prior to the start of work, verify the extent of landscape demolition to accommodate work under this contract. Additional removal, patching, and restoration shall be considered incidental to the work.
2. To protect the White Tern and Hawaiian Hoary Bat habitats during construction, Contractor shall take special care when trimming, relocating, or removing trees on the project site. Woody plants greater than 15-feet in height must not be disturbed, trimmed, or removed during the White Tern nesting and fledging season, and the June 1 through September 15 Hawaiian Hoary Bat birthing and pup rearing season. Tree removal is restricted to the fall and early winter. Trees must be inspected prior to trimming or removal, and if there are signs that White Terns may be nesting or that Hawaiian Hoary Bats may be roosting in a tree, trimming or removal of the tree must be delayed until the White Tern chicks have fully fledged, or the Hawaiian Hoary Bats have finished roosting.
3. Demolition of trees and palms includes removal of rootball, buttress roots, and surrounding roots 1-1/2" and larger to minimum depth of 18" below grade. Unless otherwise specified, surrounding roots shall be removed to a minimum depth of 12" below adjacent ground level.
4. Remove roots only where removal does not damage existing structures, pavements, or utilities to remain. If investigation indicates that roots to be removed may affect or surround such features to remain, expose the roots by hand excavation, air-spade pneumatic excavator, or similar. Do not rip out roots with a backhoe or similar equipment. The roots shall then be cut and removed, being careful not to damage the features to remain. Work shall be done under the direct supervision of a certified arborist.

0 1 3 5 feet
SCALE: 1" = 20'

Legend

- Existing Trees To Remain And Be Protected During Construction Operations
- Existing Trees To Be Demolished And Disposed Of Off Site
- Existing Hedge To Be Demolished And Disposed Of Off Site (Typical Symbol)
- (1) Tree Disposition Call-out (Refer to sheet LD-03 for Tree Disposition list)

MARC K. SHIMATSU
LICENSED PROFESSIONAL LANDSCAPE ARCHITECT
No. 13602
HAWAII, U.S.A.

LICENSE EXPIRES 4/30/28

THIS WORK WAS PREPARED BY ME OR UNDER MY SUPERVISION

STATE OF HAWAII
DEPARTMENT OF TRANSPORTATION
HIGHWAYS DIVISION

LANDSCAPE DEMOLITION PLAN - 2

HILO BAYFRONT HIGHWAY
Intersection Improvements at Waianuenue Avenue
Federal Aid Project No. NH-019-2(076)

Scale: 1" = 20'-0" Date: Sep. 2026

SHEET No. LD-02 OF 05 SHEETS

98

ORIGINAL PLAN | SURVEY PLOTTED BY | DRAWN BY | TRACED BY | DESIGNED BY | QUANTITIES BY | CHECKED BY | DATE
NOTE BOOK | No.

LAST UPDATED: Jun 10, 2026 @ 09:06 am PLOT DATE: Sep 18, 2026 @ 10:39 am
PATH/FILENAME: c:\Users\$myreview\Appdata\Local\Temp\AcPublish_3708\BLD-01 and LD-02.dwg

FED. ROAD DIST. NO.	STATE	FED. AID PROJ. NO.	FISCAL YEAR	SHEET NO.	TOTAL SHEETS
HAWAII	HAW.	NH-019-2(076)	2026	99	106

EXISTING TREE DISPOSITION LIST

SYMBOL	TREE SPECIMEN	TRUNK DIAMETER (FEET)	CANOPY SPREAD (FEET)	APPROXIMATE HEIGHT (FEET)
1	False Kamani	4	75	35
2	Coconut Palm	2	20	45
3	False Kamani	4	80	45
4	Coconut Palm	1.5	20	40
5	Coconut Palm	2	20	45
6	Coconut Palm	1.5	20	20
7	Coconut Palm	1.5	20	30
8	Coconut Palm	1.5	20	45
9	Coconut Palm	1.5	20	15
10	Coconut Palm	2	20	50
11	Coconut Palm	3	20	50
12	Coconut Palm	2.5	20	50
13	Coconut Palm	1.5	20	10
14	Coconut Palm	2.5	20	50
15	Coconut Palm	2.5	20	35
16	Coconut Palm	1	80	5
17	Coconut Palm	1.5	20	25
18	Coconut Palm	2	20	45
19	Coconut Palm	1.5	20	40
20	Coconut Palm	2	20	75
21	Coconut Palm	2	20	75
22	Coconut Palm	2	20	60
23	Coconut Palm	2	20	60
24	Coconut Palm	2	20	75
25	Coconut Palm	2	20	65
26	Coconut Palm	1.5	20	35
27	Coconut Palm	1.5	20	35
28	Coconut Palm	1.5	20	40
29	Coconut Palm	2	20	50
30	Coconut Palm	1	20	40
31	Coconut Palm	2	20	60
32	Coconut Palm	1.5	20	55
33	Coconut Palm	2	20	6
34	Coconut Palm	2	20	55
35	Coconut Palm	1.5	20	40
36	Coconut Palm	2	20	60
37	Coconut Palm	2.5	20	75
38	Coconut Palm	2	20	30
39	Coconut Palm	2.5	20	50
40	Coconut Palm	2	20	40
41	Coconut Palm	2	20	40
42	Coconut Palm	2	20	50
43	Coconut Palm	1.5	20	50
44	Coconut Palm	2.5	20	55
45	Coconut Palm	2	20	40
46	Coconut Palm	2.5	20	75
47	Coconut Palm	2	20	55

EXISTING TREE DISPOSITION LIST

SYMBOL	TREE SPECIMEN	TRUNK DIAMETER (FEET)	CANOPY SPREAD (FEET)	APPROXIMATE HEIGHT (FEET)
48	Coconut Palm	2	20	55
49	Coconut Palm	2	20	55
50	Coconut Palm	2.5	20	70
51	Coconut Palm	2.5	20	40
52	Coconut Palm	1.5	20	15
53	Coconut Palm	2.5	20	40
54	Coconut Palm	2.5	20	70
55	Coconut Palm	2.5	20	80
56	Coconut Palm	1.5	20	55
57	Coconut Palm	2	20	65
58	Coconut Palm	2.5	20	70
59	Coconut Palm	2.5	20	65
60	Coconut Palm	2	20	80
61	Coconut Palm	2	20	50
62	Coconut Palm	2	20	50
63	Coconut Palm	2	20	65
64	Coconut Palm	2	20	65
65	Coconut Palm	2	20	60
66	Coconut Palm	2	20	60
67	Coconut Palm	2	20	60
68	Coconut Palm	2	20	60
69	Coconut Palm	2	20	60
70	Coconut Palm	2	20	60
71	Coconut Palm	2	20	60
72	Coconut Palm	2	20	60
73	Coconut Palm	2	20	60
74	Coconut Palm	2	20	70
75	Coconut Palm	3	20	70
76	Coconut Palm	2	20	25
77	Coconut Palm	3	20	70
78	Coconut Palm	2	20	35
79	Coconut Palm	3	20	70
80	Coconut Palm	3	20	70
81	Coconut Palm	2	20	50
82	Coconut Palm	2	20	50
83	Coconut Palm	1	20	10
84	Kou	2	30	15
85	Kukui	1.5	35	20
86	Foxtail Palm	1.5	30	40
87	McArthur Palm	0.5	20	20
88	McArthur Palm	0.5	20	20
89	Tree	2	25	35
90	Tree	2	40	35
91	Tree	2	30	35
92	Tree	3	30	25
93	Tree	2.5	30	35
94	Tree	2	30	30

LAST UPDATE: Jun 10, 2026 @ 0624 am PLOT DATE: Sep 18, 2026 @ 10:39 am

ORIGINAL PLAN
NOTE BOOK
SURVEY PLOTTED BY DATE
DRAWN BY
TRACED BY
DESIGNED BY
QUANTITIES BY
CHECKED BY
No.

PATH/FILENAME: C:\Users\Emmanuel\Documents\Work Files\Highways\Ash\Ash\Ash_2026\LD-03.dwg

MARC K. SHIMATSU
LICENSED PROFESSIONAL LANDSCAPE ARCHITECT
No. 13602
HAWAII, U.S.A.

LICENSE EXPIRES 4/30/28

THIS WORK WAS PREPARED BY ME OR UNDER MY SUPERVISION

STATE OF HAWAII
DEPARTMENT OF TRANSPORTATION
HIGHWAYS DIVISION

TREE DISPOSITION LIST

HILO BAYFRONT HIGHWAY

Intersection Improvements at Waianuenue Avenue
Federal Aid Project No. NH-019-2(076)

Scale: None Date: Sep. 2026

SHEET No. LD-03 OF 05 SHEETS

FED. ROAD DIST. NO.	STATE	FED. AID PROJ. NO.	FISCAL YEAR	SHEET NO.	TOTAL SHEETS
HAWAII	HAW.	NH-019-2(076)	2026	100	106

TREE PROTECTION ZONE:

1. *All trees identified on the plans to be protected. All trees 24" caliper or greater (as measured at 4½ feet height) shall be protected. If trees other than those designated for removal are damaged beyond survival condition as determined by the Engineer, the Contractor shall remove such trees and replace with a tree of the same species and size and maintain for the duration of the construction or 12 months whichever is greater at no cost to the State.*

2. *The recommended tree protection zone should be located at the outer drip line of the canopy of the tree. However, the minimum protection zone around a tree should be at least 10 feet from the external surface of the tree's trunk. For all palms, the minimum protection zone should be at least 10 feet from the external surface of the palm's trunk. Fence location may be adjusted as directed by the Engineer.*

3. *All underground utilities and irrigation lines should be routed outside of the tree protection zone. If utilities must traverse the tree protection zone, they shall be tunneled or bored at a depth of 4 feet or greater within the tree protection zone.*

4. *All protected trees shall be listed on the demolition, landscape, grading and utilities plans. If there is a discrepancy with all plans, Contractor shall contact Engineer immediately.*

5. *Protective fences shall be erected around trees identified on plan to remain and/or trees with a trunk diameter greater than 24 inches (as measured at a height of 4 ½ feet.) Protective fence shall be 4 feet high orange plastic mesh or approved equivalent supported on steel T-post a minimum of 6 feet long. Protective fence shall surround tree at a minimum of 10 feet from tree trunk with steel T-post at a minimum of 5 feet on center. Fence shall be installed prior to any demolition work and shall remain in place until site work is completed. Signs shall be posted on all four sides to read "TREE PROTECTION ZONE [TPZ] - NO GRADE CHANGE, STORAGE OR EQUIPMENT PERMITTED WITHIN TPZ."*

6. *For the duration of construction within the drip line of the trees to remain there must be:*
   - *No changes, alteration or disturbance to the grade by adding fill, excavating or scraping except as noted on plans;*
   - *No storage on construction materials or equipment;*
   - *No stockpiling of any construction materials or excavated materials;*
   - *No disposal of any liquids (e.g. concrete slurry, gas, oil, paint);*
   - *No vehicular traffic, equipment er excessive pedestrian traffic;*
   - *No attachment of any wires, ropes, lights or any other such attachment other than those of a protective nature to any tree to be preserved; and*
   - *No cleaning of equipment or material under the canopy of any tree or group of trees to be preserved*

7. *Auger tunneling, not trenching, shall be used where possible for utility placement within the drip line of the tree. If trenching is necessary it shall be hand dug within the drip line of the tree.*

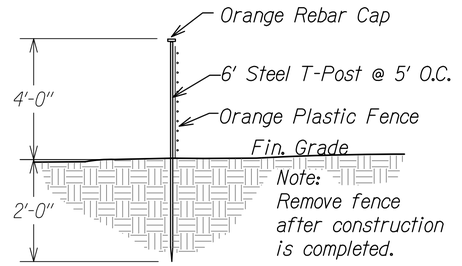

DETAIL A - ORANGE CONSTRUCTION FENCE
NOT TO SCALE

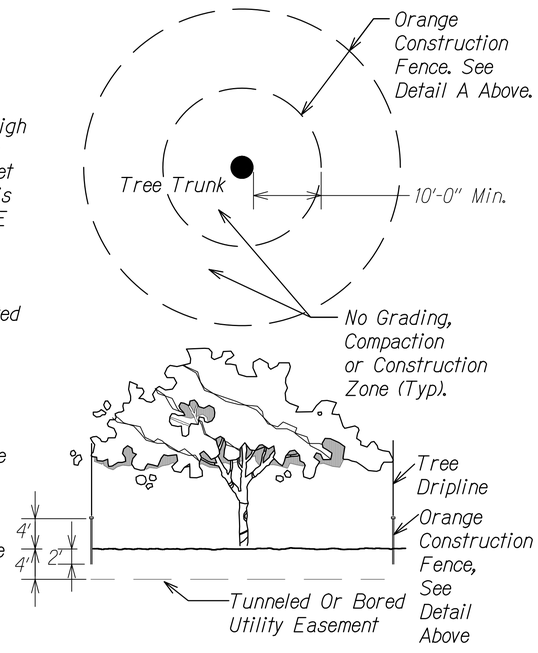

TREE PROTECTION
Scale: Not to Scale

1
LD-04 LD-04

MARC K. SHIMATSU
LICENSED PROFESSIONAL LANDSCAPE ARCHITECT
No. 13602
HAWAII, U.S.A.

LICENSE EXPIRES 4/30/28

THIS WORK WAS PREPARED BY
ME OR UNDER MY SUPERVISION

STATE OF HAWAII
DEPARTMENT OF TRANSPORTATION
HIGHWAYS DIVISION

TREE PROTECTION DETAILS

HILO BAYFRONT HIGHWAY
Intersection Improvements at Waianuenue Avenue
Federal Aid Project No. NH-019-2(076)

Scale: As Shown Date: Sep. 2026

SHEET No. LD-04 OF 05 SHEETS

100

ORIGINAL PLAN
NOTE BOOK
No.
SURVEY PLOTTED BY
DRAWN BY
TRACED BY
DESIGNED BY
QUANTITIES BY
CHECKED BY
DATE

LAST UPDATE: Jun 10, 2026 @ 0624 am PLOT DATE: Sep 18, 2026 @ 10:39 am

PATH/FILENAME: C:\Users\timgrowe\Documents\Bowers\Temp\BAsPublish_310161_LD-04.dwg

FED. ROAD DIST. NO.	STATE	FED. AID PROJ. NO.	FISCAL YEAR	SHEET NO.	TOTAL SHEETS
HAWAII	HAW.	NH-019-2(076)	2026	101	106

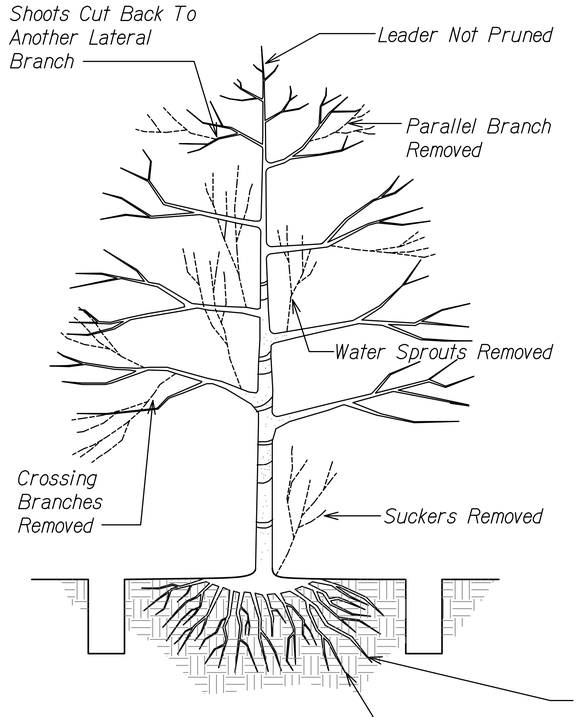

Tree Roots Shall Not Be Cut Unless Cutting Is Unavoidable. When Root Cutting Is Unavoidable, A Clean, Sharp Cut Shall Be Made To Avoid Shredding Or Smashing. Root Cuts Shall Be Made Back To A Lateral Root Whenever Possible, Roots 2" Or Greater In Diameter Shall Be Tunneled Or Bored Under And Shall Be Covered To Prevent Dehydration. Exposed Roots Shall Be Covered Immediately With Soil Or Burlap And Kept Moist. No Roots Larger Than 2" Shall Be Cut Unless No Other Alternative Is Feasible And Approved By A Certified Arborist And Engineer. Fertilizer And Water To Minimize Shock As Directed By A Certified Arborist Or Engineer.

Auger Tunneling, Not Trenching, Shall Be Used Where Possible For Utility Placement Within The Drip Line Of The Tree. If Trenching Is Necessary It Shall Be Hand Dug Within The Drip Line Of The Tree.

NOTES:

1. Positions of first and second cuts may be reversed in some cases, particularly when cutting a large branch with a chainsaw.
2. Do not make flush cuts or leave stubs.
3. Do not paint cuts.
4. Remove dead, broken or malformed branches.
5. Remove all vines entwined in the tree or around its trunk.
6. All pruning shall be completed using clean sharp tools. All cuts shall be clean and smooth, with the bark intact with no rough edges or tears.
7. Dispose of all cuttings outside of right of way.
8. Retain the normal shape of the plant.

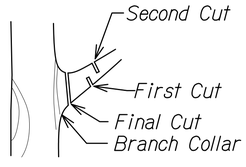

TYPICAL BRANCH REMOVAL

TREE PRUNING

Scale: Not to Scale

1
LD-05 LD-05

MARC K. SHIMATSU
LICENSED PROFESSIONAL LANDSCAPE ARCHITECT
No. 13602
HAWAII, U.S.A.

LICENSE EXPIRES 4/30/28

THIS WORK WAS PREPARED BY ME OR UNDER MY SUPERVISION

STATE OF HAWAII
DEPARTMENT OF TRANSPORTATION
HIGHWAYS DIVISION

TREE PRUNING DETAILS

HILO BAYFRONT HIGHWAY
Intersection Improvements at Waianuenue Avenue
Federal Aid Project No. NH-019-2(076)

Scale: As Shown Date: Sep. 2026

SHEET No. LD-05 OF 05 SHEETS

101

ORIGINAL PLAN
NOTE BOOK
No.
SURVEY PLOTTED BY DATE
DRAWN BY
TRACED BY
DESIGNED BY
QUANTITIES BY
CHECKED BY

LAST UPDATE: Jun 10, 2026 @ 06:24 am PLOT DATE: Sep 18, 2026 @ 10:39 am

PATH: FILENAME: C:\Users\Amaya\ws\Sapporo\Book\Temp\$Aarch\Arch_2110\LD-05.dwg

FED. ROAD DIST. NO.	STATE	FED. AID PROJ. NO.	FISCAL YEAR	SHEET NO.	TOTAL SHEETS
HAWAII	HAW.	NH-019-2(076)	2026	102	106

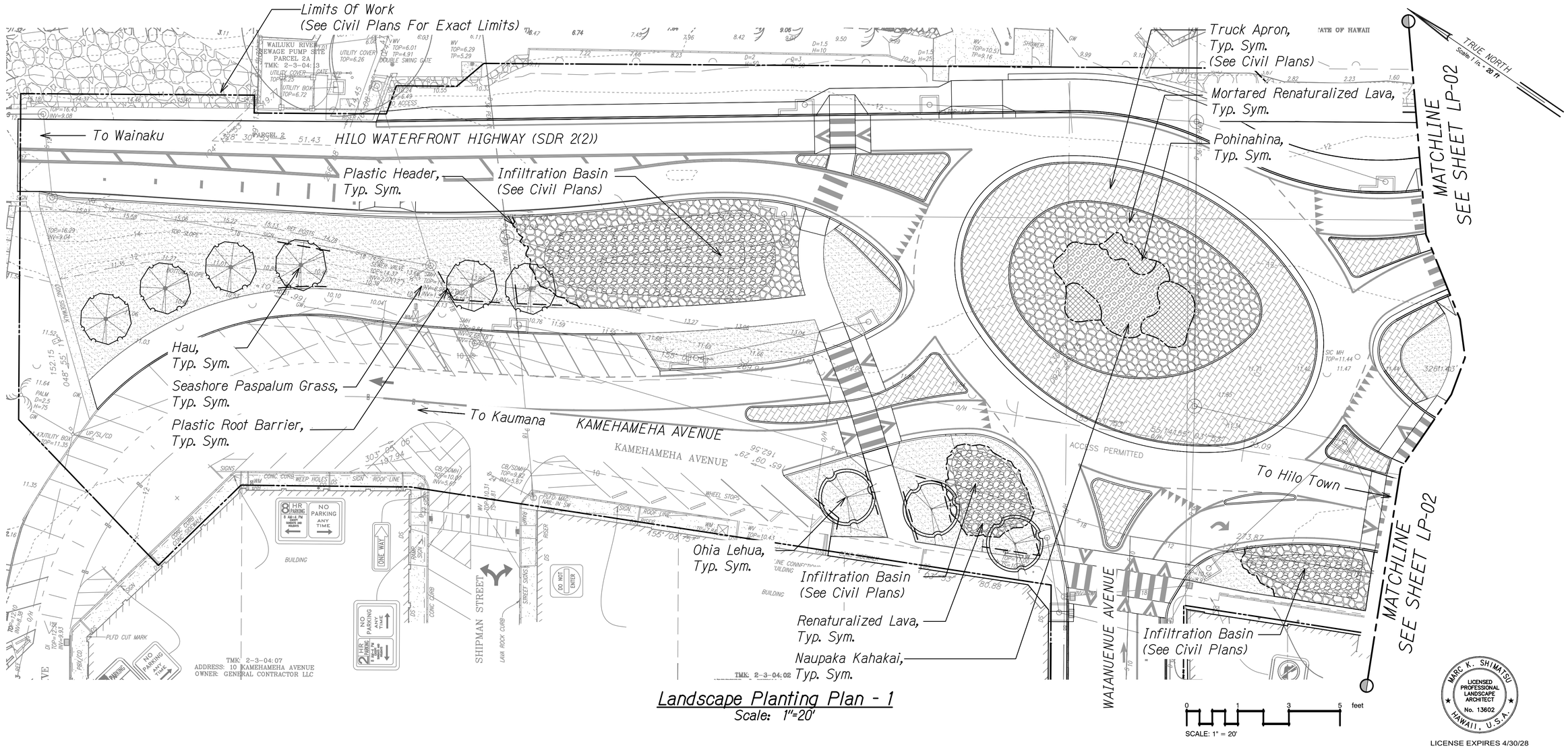

Landscape Planting Plan - 1
Scale: 1"=20'

Notes:

1. *Contractor shall verify all final tree/palm locations with the Engineer prior to installation. Final tree/palm locations shall be flagged and coordinated with the Engineer.*
2. *Contractor shall provide a temporary automatic irrigation system for all new trees, shrubs, ground cover, and grass areas for the duration of the plant establishment period. Temporary irrigation shall be removed upon project acceptance or as directed by Engineer. Temporary automatic irrigation system shall be considered incidental to the various planting items.*
3. *Provide and incorporate 2" layer of soil amendments to 4" layer imported topsoil. Incorporate additional amendments as recommended by soil analysis.*

ORIGINAL PLAN	SURVEY PLOTTED BY	DATE
	DRAWN BY	
	TRACED BY	
NOTE BOOK	DESIGNED BY	
	QUANTITIES BY	
No.	CHECKED BY	

LAST UPDATE: Sep 18, 2026 @ 09:20 am PLOT DATE: Sep 18, 2026 @ 10:39 am
PATH/FILENAME: C:\Users\Engineering\Desktop\Temp\Auto\Publish_2026\LP-01 and LP-02.dwg

MARC K. SHIMATSU
LICENSED PROFESSIONAL LANDSCAPE ARCHITECT
No. 13602
HAWAII, U.S.A.

LICENSE EXPIRES 4/30/28

THIS WORK WAS PREPARED BY ME OR UNDER MY SUPERVISION

STATE OF HAWAII
DEPARTMENT OF TRANSPORTATION
HIGHWAYS DIVISION

LANDSCAPE PLANTING PLAN - 1

HILO BAYFRONT HIGHWAY
Intersection Improvements at Waianuenue Avenue
Federal Aid Project No. NH-019-2(076)

Scale: 1" = 20'-0" Date: Sep. 2026

SHEET No. LP-01 OF 05 SHEETS

FED. ROAD DIST. NO.	STATE	FED. AID PROJ. NO.	FISCAL YEAR	SHEET NO.	TOTAL SHEETS
HAWAII	HAW.	NH-019-2(076)	2026	103	106

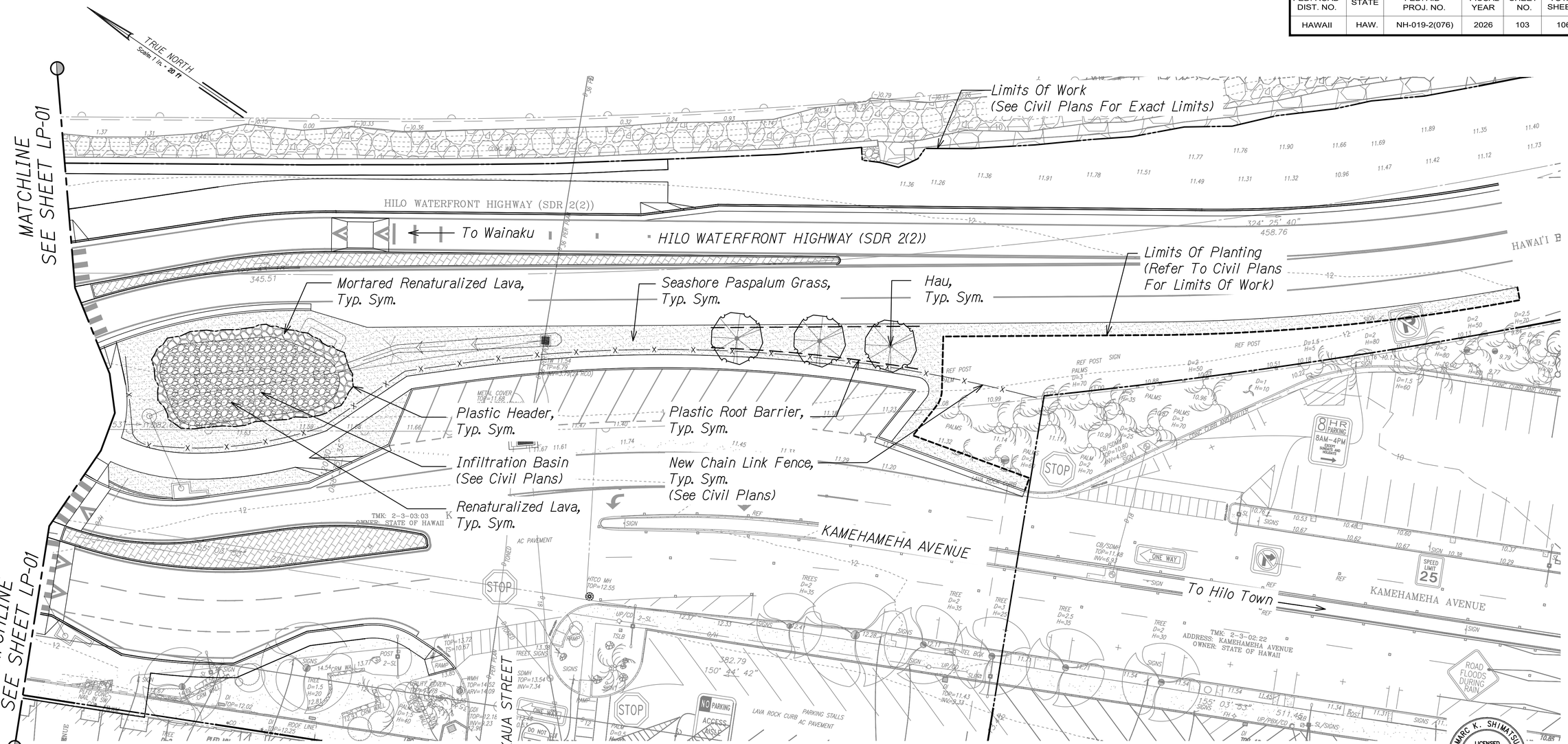

Landscape Planting Plan - 1

Scale: 1"=20'

0 1 3 5 feet

SCALE: 1" = 20'

Notes:

1. *Contractor shall verify all final tree/palm locations with the Engineer prior to installation. Final tree/palm locations shall be flagged and coordinated with the Engineer.*
2. *Contractor shall provide a temporary automatic irrigation system for all new trees, shrubs, ground cover, and grass areas for the duration of the plant establishment period. Temporary irrigation shall be removed upon project acceptance or as directed by Engineer. Temporary automatic irrigation system shall be considered incidental to the various planting items.*
3. *Provide and incorporate 2" layer of soil amendments to 4" layer imported topsoil. Incorporate additional amendments as recommended by soil analysis.*

MARC K. SHIMATSU
LICENSED PROFESSIONAL LANDSCAPE ARCHITECT
No. 13602
HAWAII, U.S.A.

LICENSE EXPIRES 4/30/28

THIS WORK WAS PREPARED BY
ME OR UNDER MY SUPERVISION

STATE OF HAWAII
DEPARTMENT OF TRANSPORTATION
HIGHWAYS DIVISION

LANDSCAPE PLANTING PLAN - 2

HILO BAYFRONT HIGHWAY

Intersection Improvements at Waianuenue Avenue
Federal Aid Project No. NH-019-2(076)

Scale: 1" = 20'-0" Date: Sep. 2026

SHEET No. LP-02 OF 05 SHEETS

ORIGINAL PLAN
NOTE BOOK
No.
SURVEY PLOTTED BY
DRAWN BY
TRACED BY
DESIGNED BY
QUANTITIES BY
CHECKED BY
DATE

LAST UPDATE: Sep 18, 2026 @ 09:20 am
PLOT DATE: Sep 18, 2026 @ 10:39 am
PATH: P:\FILENAME\...\LP-02.dwg

FED. ROAD DIST. NO.	STATE	FED. AID PROJ. NO.	FISCAL YEAR	SHEET NO.	TOTAL SHEETS
HAWAII	HAW.	NH-019-2(076)	2026	104	106

Note:
Trunk must be protected from rope sling burns and abrasions during moving. Tree shall be plumb. If tree is leaning at the end of the plant establishment period, the tree shall be rejected.

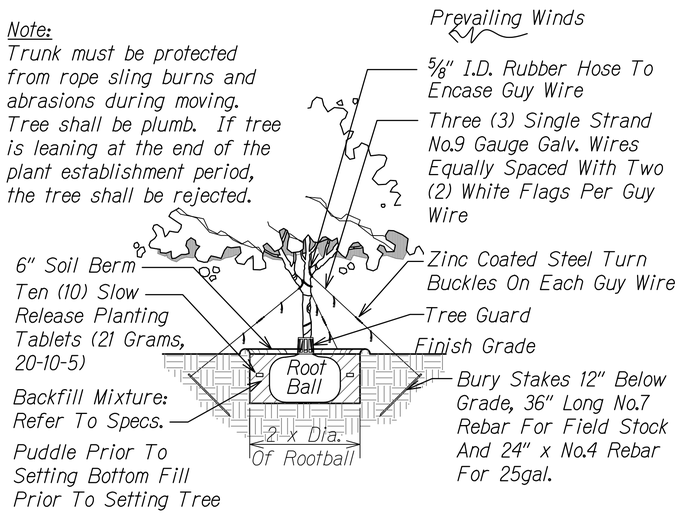

TREE PLANTING AND GUYING
Scale: Not to Scale — 1 LP-03|LP-03

Notes:
1. Ground covers shall be plumb. If ground cover is leaning at the end of the plant establishment period, it shall be replaced at the contractor's expense.
2. Immediately after planting, water heavily to ensure soil settles around roots.

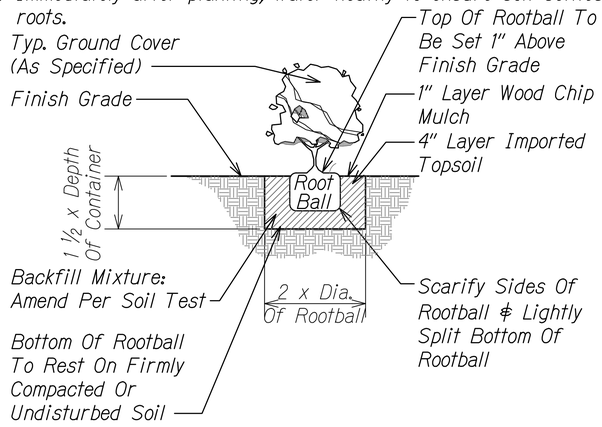

GROUND COVER PLANTING
Scale: Not to Scale — 3 LP-03|LP-03

Notes:
1. S = Spacing, (refer to plant list for spacing).
2. Use spacing layout for shrubs, ground covers, and annuals.

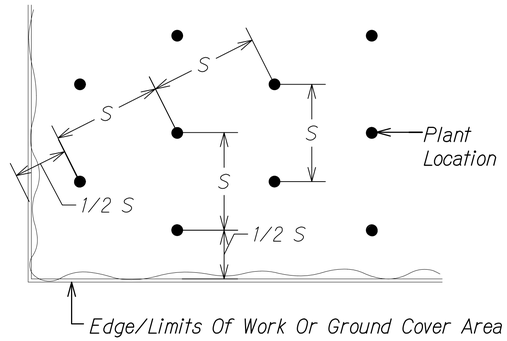

TRIANGULAR SPACING
Scale: Not to Scale — 5 LP-03|LP-03

Notes:
1. Single stem shrubs shall be plumb. If shrub is leaning at the end of the plant establishment period, it shall be replaced at the contractor's expense.
2. Immediately after planting, water heavily to ensure soil settles around roots.

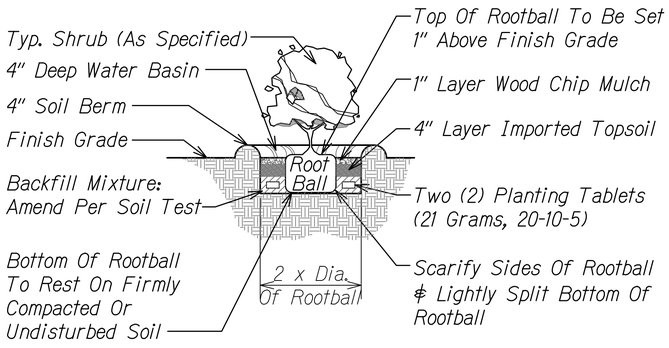

SHRUB PLANTING
Scale: Not to Scale — 2 LP-03|LP-03

Hydro-Mulch:
Shall Be Specifically Processed Fiber Containing No Growth Or Germination Inhibiting Factors. It Shall Be Such That After Addition And Agitation In The Hydraulic Equipment With Fertilizer, Water, Geobinders, And Other Additives Not Detrimental To Plant Growth, The Fibers Will Form A Homogeneous Slurry When Hydraulically Sprayed On The Soil. The Fibers Shall Form A Blotter-like Ground Cover Which Readily Absorbs Water And Allows Infiltration. Complete Coverage Of The Surface Shall Be Attained.



HYDRO-MULCHING DETAIL
Scale: Not to Scale — 4 LP-03|LP-03

MARC K. SHIMATSU
LICENSED PROFESSIONAL LANDSCAPE ARCHITECT
No. 13602
HAWAII, U.S.A.

LICENSE EXPIRES 4/30/28

THIS WORK WAS PREPARED BY ME OR UNDER MY SUPERVISION

STATE OF HAWAII
DEPARTMENT OF TRANSPORTATION
HIGHWAYS DIVISION

LANDSCAPE DETAILS

HILO BAYFRONT HIGHWAY
Intersection Improvements at Waianuenue Avenue
Federal Aid Project No. NH-019-2(076)

Scale: As Shown Date: Sep. 2026

SHEET No. LP-03 OF 05 SHEETS

104

ORIGINAL PLAN | NOTE BOOK | SURVEY PLOTTED BY | DRAWN BY | TRACED BY | DESIGNED BY | QUANTITIES BY | CHECKED BY | DATE

LAST UPDATE: Jun 10, 2026 @ 0620 am PLOT DATE: Sep 18, 2026 @ 1039 am

PATH/FILENAME: C:\Users\Emmanuel\Documents\Kapaolahi\Hilo\Bayfront\Design\Plan\Hydro\Hydro_2026\LP-03.dwg

FED. ROAD DIST. NO.	STATE	FED. AID PROJ. NO.	FISCAL YEAR	SHEET NO.	TOTAL SHEETS
HAWAII	HAW.	NH-019-2(076)	2026	105	106

Notes:
1. Place top edge of plastic root barrier at finish grade and secure w/ manufacturer provided pins.
2. Seams shall have minimum 3" overlap. Refer to manufacturer instructions for bonding the seam.
3. Do not allow gaps in barrier during installation or backfilling.
4. Refer to planting plan for tree locations.

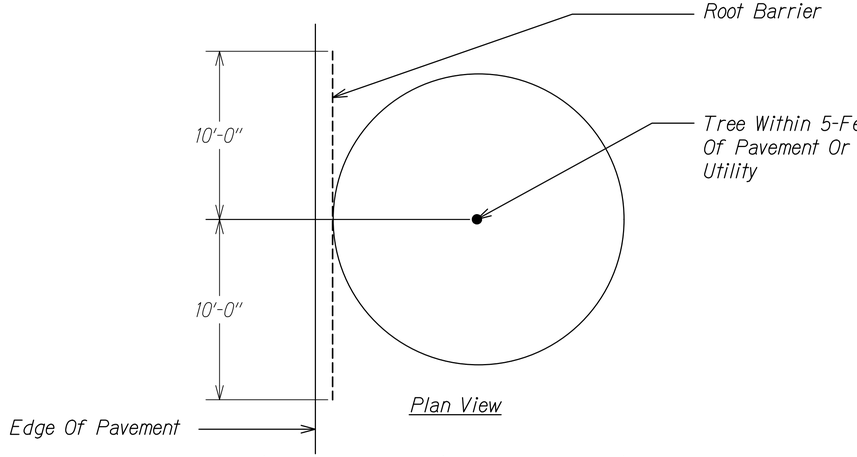

Plan View

Section

ROOT BARRIER

Scale: Not to Scale

1 LP-04 LP-04

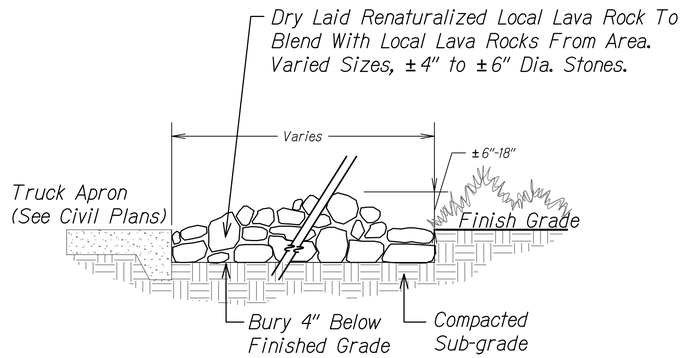

RENATURALIZED LAVA DETAIL

Scale: Not to Scale

2 LP-04 LP-04

MORTARED RENATURALIZED LAVA DETAIL

Scale: Not to Scale

3 LP-04 LP-04

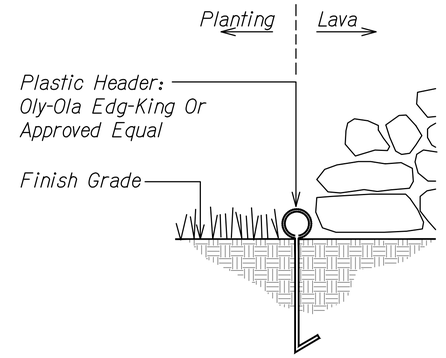

Note:
Refer to manufacturer's specifications for installation instructions.

PLASTIC HEADER

Scale: Not to Scale

4 LP-04 LP-04

MARC K. SHIMATSU
LICENSED PROFESSIONAL LANDSCAPE ARCHITECT
No. 13602
HAWAII, U.S.A.

LICENSE EXPIRES 4/30/28

THIS WORK WAS PREPARED BY ME OR UNDER MY SUPERVISION

STATE OF HAWAII
DEPARTMENT OF TRANSPORTATION
HIGHWAYS DIVISION

LANDSCAPE DETAILS

HILO BAYFRONT HIGHWAY
Intersection Improvements at Waianuenue Avenue
Federal Aid Project No. NH-019-2(076)

Scale: As Shown Date: Sep. 2026

SHEET No. LP-04 OF 05 SHEETS

105

ORIGINAL PLAN
NOTE BOOK
No.
SURVEY PLOTTED BY
DRAWN BY
TRACED BY
DESIGNED BY
QUANTITIES BY
CHECKED BY
DATE

LAST UPDATE: Sep 18, 2026 @ 09:29 am
PLOT DATE: Sep 18, 2026 @ 10:39 am
PATH/FILENAME: c:\Users\Shimpei.Hawai'i\Appdata\Local\Temp\Acpublish_2700\LP-04.dwg

FED. ROAD DIST. NO.	STATE	FED. AID PROJ. NO.	FISCAL YEAR	SHEET NO.	TOTAL SHEETS
HAWAII	HAW.	NH-019-2(076)	2026	106	106

PLANTING SCHEDULE - HILO BAYFRONT HIGHWAY

TREES	QTY	BOTANICAL NAME	COMMON NAME	CONT	REMARKS
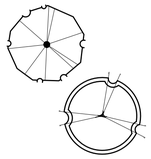	9	Hibiscus tiliaceus	Hau	25 Gal.	1.5" - 2" Min. Cal. 4' - 6' Brown Trunk
	3	Metrosideros polymorpha	Ohia Lehua	25 Gal.	1.5" - 2" Min. Cal. 4' - 6' Brown Trunk

SHRUB AREAS	QTY	BOTANICAL NAME	COMMON NAME	CONT	REMARKS
	900 SF	Scaevola taccada	Naupaka Kahakai	6" Pots @ 24" O.C.	Full And Bushy, 18" - 24" Height

GROUND COVERS	QTY	BOTANICAL NAME	COMMON NAME	CONT	REMARKS
	675 SF	Vitex rotundifolia	Pohinahina	6" Pots @ 12" O.C.	Triangular Spacing

GRASS SPRIGS	QTY	BOTANICAL NAME	COMMON NAME	CONT	REMARKS
	19,200 SF	Paspalum vaginatum	Seashore Paspalum		Hydrosprig, Broadcast 10 Bushels/1,000 SF

MISC. ITEMS	QTY				REMARKS
— — — —	375 LF	Plastic Root Barrier			48" Depth
—·—·—·—	700 LF	Plastic Header			
	5,600 SF	Renaturalized Lava			12" - 18" Deep Layer Min., 4" - 6" Dia. Stones Over Weedmat, Typical. Match Local Stone.
	6,200 SF	Mortared Renaturalized Lava			12" - 18" Deep Layer Min., 4" - 6" Dia. Stones Over 8" Mortar Bed, No Reinforcement, Typical. Match Local Stone.
	282 CY	Imported Screened Topsoil			4" Layer Over All New Planting Areas
	22,800 SF	Imported Compost			2" Layer Over All New Planting Areas
	22,800 SF	Soil Amendments			2" Layer Over All New Planting Areas

MARC K. SHIMATSU
LICENSED PROFESSIONAL LANDSCAPE ARCHITECT
No. 13602
HAWAII, U.S.A.

LICENSE EXPIRES 4/30/28

THIS WORK WAS PREPARED BY ME OR UNDER MY SUPERVISION

STATE OF HAWAII
DEPARTMENT OF TRANSPORTATION
HIGHWAYS DIVISION

PLANTING SCHEDULE

HILO BAYFRONT HIGHWAY
Intersection Improvements at Waianuenue Avenue
Federal Aid Project No. NH-019-2(076)

Scale: None Date: Sep. 2026

SHEET No. LP-05 OF 05 SHEETS

106

ORIGINAL PLAN
NOTE BOOK
SURVEY PLOTTED BY DATE
DRAWN BY
TRACED BY
DESIGNED BY
QUANTITIES BY
CHECKED BY
No.

LAST UPDATE: Aug 19, 2026 @ 02:29 pm PLOT DATE: Sep 18, 2026 @ 10:40 am
PATH: I:\LENAWC Cs\Users\Emgeshaw\Appdata\Local\Temp\AcPublish_27108\LP-05.dwg