GREENVILLE UTILITIES COMMISSION
GREENVILLE, NORTH CAROLINA

SPECIFICATION AND BID DOCUMENTS FOR THE RELOCATION OF 12.47 KV DISTRIBUTION STRUCTURES AND 115 KV TRANSMISSION STRUCTURES ALONG EVANS RD FROM E. FIRE TOWER RD TO GREENVILLE BLVD

ISSUED FOR BIDS

ADVERTISEMENT FOR BIDS

Sealed proposals will be received in the Office of the Procurement Manager, Greenville Utilities Commission, 401 S. Greene Street, Greenville, North Carolina 27834 until 2:00 PM (EST) on December 1, 2026 and immediately thereafter publicly opened and read for the Relocation of 12.47 kV Distribution Structures and 115 kV Transmission Structures Along Evans Rd from E. Fire Tower Rd to Greenville Blvd

Instructions for submitting bids and complete specifications will be available in the Office of the Procurement Manager, Greenville Utilities Commission, 401 S. Greene Street, Greenville, North Carolina during regular office hours, which are 8:30AM – 5:00PM Monday through Friday.

Greenville Utilities Commission reserves the right to reject any or all bids. **Late bids will not be considered.**

PRE-BID MEETING – A Pre-Bid meeting will be held at Greenville Utilities Commission, New Operations Center, Engineering Building, 3355 NC 43N, Greenville, North Carolina 27834 on Wednesday, October 28, 2026 at 1:00 pm to 3:00 pm (EST).

The intent of the Pre-Bid Meeting is to allow the bidders an opportunity to ask questions and make clarifications prior to submitting a bid.

Only portions of the bid/contract will be discussed. Lack of discussion or clarification of any portion of the bid/contract does not relieve the Bidder from conforming to the provisions of the same.

Questions regarding this Request for Bid (RFB) should be received by or before 5:00 pm, November 4, 2026. All questions shall be directed via e-mail to the attention of Cleve Haddock, Lifetime CLGPO, Procurement Manager at: haddocgc@guc.com, (252) 551-1533.

GREENVILLE UTILITIES COMMISSION
GREENVILLE, NORTH CAROLINA

SPECIFICATION AND BID DOCUMENTS FOR THE RELOCATION OF 12.47 KV DISTRIBUTION STRUCTURES AND 115 KV TRANSMISSION STRUCTURES ALONG EVANS RD FROM E. FIRE TOWER RD TO GREENVILLE BLVD

TABLE OF CONTENTS

REQUEST FOR PROPOSAL

General Instructions GI-1
General Conditions GC-1
Special Conditions SC-1
Contract C-1

FORM OF PROPOSAL

Proposal P-1
Terms and Conditions P-2
Addenda/Clarifications/Bulletins P-5
Labor, Material, and Unit Pricing Proposals P-7
Proposed Construction Schedule P-15
Certificate of Insurance P-16
Copy of Contractor's License P-17
Form of Exceptions P-18
Equal Employment Opportunity Affidavit P-19
Proposed Project Management Staff P-20
References P-21
List of Subcontractors P-22
E-Verify Compliance P-23
Iran Divestment Act Certification P-24
Bid Bond P-25
Performance Bond/Payment Bond P-26
GUC Terms and Conditions P-45

TECHNICAL SPECIFICATIONS

Technical Specifications – Installation Specifications S-1
Technical Specifications – Material Specifications S-32

APPENDICES

A. Detail Construction Drawings
B. Standard Distribution Pole Framing Drawings
C. Standard Assembly Drawings
D. Greenville Blvd Custom Distribution Drawings
E. Transmission Construction Drawings
F. Transmission Pole Vendor Drawings

G. Structure #43 Field Drill Drawing
H. Standard Transmission Pole Framing Drawings
I. Standard Transmission Assembly Drawings
J. Sag-Tension Charts
K. Fiber Sag-Tension Charts
L. Bollard Detail Drawing

SECTION I

GENERAL INSTRUCTIONS FOR FORMAL BIDS

RELOCATION OF 12.47 KV DISTRIBUTION STRUCTURES AND 115 KV TRANSMISSION STRUCTURES ALONG EVANS RD FROM E. FIRE TOWER RD TO GREENVILLE BLVD

1. NOTICE TO BIDDERS

Sealed bids, subject to the conditions made a part hereof, will be received in the Office of the Procurement Manager, Greenville Utilities Commission, 401 S. Greene Street, Greenville, North Carolina 27834 until 2:00 PM (EST) on December 1, 2026, the day of opening. Bids submitted in a fax or e-mail in response to this Invitation for Bids **will not be acceptable.**

2. STANDARD FORMS REQUIRED

Each bidder must submit a proposal on the enclosed bid forms. **The bid must be signed by an authorized official of the firm. Return only the attached Proposal Form. Do not return the Advertisement for Bids, Instructions to Bidders or Specifications.**

3. PREPARATION OF BID

Bids must be in sealed envelopes clearly marked on the outside with the name of the bid and the bid opening date and time. Bid shall be addressed to PROCUREMENT MANAGER, GREENVILLE UTILITIES COMMISSION, 401 S. GREENE STREET, GREENVILLE, NORTH CAROLINA 27834.

4. TIME FOR OPENING BIDS

Bids will be opened promptly and read at the hour and on the date set forth in the advertisement in the Office of the Procurement Manager, Greenville Utilities Main Office, 401 S. Greene Street, Greenville, North Carolina. Bidders or their authorized agents are invited to be present.

5. BID SECURITY

5.1. Each Proposal shall be accompanied by a cashier's check, or certified check drawn on a bank or trust company insured by the Federal Deposit Insurance Corporation, or the Savings Association Insurance Fund, or an original signed/sealed Bid Bond in an amount equal to not less than five percent (5%) of the total amount of the Proposal; said deposit to be retained by the Owner as liquidated damages in event of failure of the Successful Bidder to execute the Contract within ten (10) days after the award.

5.2. Bid Bond shall be conditioned that the Surety will upon demand forthwith make payment to the Obligee upon said Bond if the Bidder fails to execute the Contract in accordance with the Bid Bond, and upon failure to immediately make payment, the Surety shall pay to the Obligee an amount equal to double the amount of said Bond. Standard Form of Bid Bond is included in these Specifications.

5.3. Only one (1) bid Surety is required, the amount of which shall be based on the total amount of all bid schedules.

6. BULLETINS AND ADDENDA

Any bulletins issued during the time of bidding or addenda to Specifications are to be considered covered in the Proposal, and in executing a Contract will become a part thereof. Receipt of addenda shall be acknowledged by the bidder in the *Form of Proposal*.

7. NC SALES TAX

Do not include NC sales taxes in bid figure; however, Greenville Utilities Commission (GUC) does pay sales tax. Sales tax should be added to the invoice as a separate item.

8. FEDERAL EXCISE TAX

GUC is exempt from Federal Excise Tax and will issue a Federal Exemption Certificate upon request to the successful bidder.

9. FORM OF EXCEPTIONS

Proposals shall include a *Form of Exceptions* utilizing forms provided which shall itemize each exception from the Specifications. The Form of Exceptions shall state the section, subsection, and paragraph designations from the part of the Specifications to which exception is taken and explain in detail the nature of the exception. A copy of this *Form of Exceptions* is included in the Form of Proposals. Exceptions will not necessarily eliminate a Bidder from consideration, even if bids without exceptions are received from others. The treatment of exceptions will be based entirely on the overall best interests of the Owner.

10. DISCREPANCY

Should the Bidder find discrepancies in or omissions from the Drawings or Documents or should he be in doubt as to their meaning, he shall at once notify the Engineer who will send written instructions to all Bidders. Neither the Owner nor the Engineer will be responsible for any oral instructions. If Plans and Specifications are found to disagree after Contract is awarded, the Engineer shall be the judge as to what was intended. The Successful Bidder is hereby made responsible for the furnishing of the necessary labor, tools and equipment reasonably inferred or evidently necessary for the proper execution and completion of the

work; for any additional work involved in the correction of apparent errors or inconsistencies, and in executing the true intent and meaning of the Drawings and Specifications as interpreted by the Engineer and all such labor and equipment shall be provided at the Contractor's expense, and under no condition will any such labor and equipment be allowed as an extra.

11. EVALUATION AND AWARD OF BIDS

11.1. The award of the Contract will be made to the lowest responsible, responsive Bidder as soon as practicable. The bid shall be awarded to the Bidder who, in the judgment of the Owner, offers the best value to the Owner. Factors to be considered by the Owner are specified in Paragraph 11.3. The Owner reserves the right to reject any and all bids.

11.2. The Owner reserves the right to waive minor irregularities or minor errors in any Proposal if it appears to the Owner that such irregularities or errors were made through inadvertence. Any such irregularities or errors so waived must be corrected on the Proposal prior to its acceptance by the Owner.

11.3. In estimating the lowest cost to the Owner as one of the factors in deciding the award of the Contract, the Owner will consider, in addition to the prices quoted in the Proposal, the following:

11.3.1. Completion date

11.3.2. Adherence to the Plans and Specifications

11.3.3. Contractor capabilities, crew experience, and past performance

11.3.4. Conditional quotations (Only firm fixed prices in U.S. dollars)

11.3.5. Any additional factors deemed appropriate by the Owner.

11.4. In the event the Bidder proposes any change or deviation from the Engineer's Plans and Specifications, such proposed changes or deviations must be submitted at the time bids are opened on the *Form of Exceptions* included. The Owner reserves the right to reject any proposed changes or deviations. All exceptions must be stated on the *Form of Exceptions*. Failure to provide a *Form of Exceptions* with the Proposal shall imply strict adherence to all details of the Plans and Specifications.

11.5. The Contract, when awarded, shall be deemed to include the Specifications for the equipment, and the Bidder shall not claim any modification thereof resulting from any representative or promise made at any time by any officer, agent, or employee of the Owner or by any other person.

12. PROMPT PAYMENT DISCOUNTS

Bidders are urged to compute all discounts into the price offered. If a prompt payment discount is offered, it may be considered in the award of the contract.

13. NUMERICAL ERRORS

In the case of a discrepancy between a unit price and the extension (the unit price multiplied by the number of units) the unit price governs. In the case where numerical bids are stated both in numbers and in words, the words govern.

14. BID WITHDRAWAL

If, within 24 hours after bids are opened, any Bidder files a duly signed written notice with the Owner and promptly thereafter demonstrates to the reasonable satisfaction of the Owner that there was a substantial mistake in the preparation of its bid, that Bidder will not be permitted to modify its bid, but may withdraw its bid in its entirety, and the Bid Security will be returned. Thereafter, the bidder will be disqualified from further bidding on the installation of the project herein specified.

15. PERFORMANCE AND PAYMENT BONDS

15.1. The Successful Bidder shall be required to furnish separate Performance and Payment Bonds executed on the forms bound herein in amounts at least equal to one hundred percent (100%) of the Contract price as security for the faithful performance of this Contract and as security for the payment of all persons performing labor and furnishing materials and equipment in connection with this Contract.

15.2. Performance and Payment Bonds shall be with a Surety company authorized and licensed to do business in the State of North Carolina and shall be for the full Contract sum.

16. EXAMINATION OF CONDITIONS

Prior to the submission of the Proposal, the Bidder shall make and shall be deemed to have made a careful examination of the Plans and Specifications on file with the Owner and with the Engineer, and all other matters that may affect the cost and the time of completion of the work.

SUBCONTRACTORS

The Bidder shall include in the Proposal a listing of all subcontractors (if any) and their respective support services to be utilized during the project. All subcontractors will be subject to approval by the Owner and Engineer.

17. COMPLETION

17.1. The award of this Contract shall be issued as soon as possible, subsequent to the bid opening, by issuance of written contract to the Contractor by the Engineer or notification from the Owner. Work on the project shall begin after award of Contract and no later than January 4, 2027.

17.2. The completion date for the projects' on-site activities shall be December 15, 2028.

17.3. Time for completion shall be extended for delays due to bad weather days or other special cases with the written consent of the Owner and/or Engineer.

17.4. The Contractor shall include in the Proposal a project construction schedule using the completion date above, indicating each major construction activity with duration and the total number of calendar days of construction time he proposes to perform his work based on the above completion date.

18. LIQUIDATED DAMAGES

Time is of the essence, and it is critical that the work be performed on schedule and time is allowed for the completion of the work in the Contract Agreement included herewith. Damages for delay shall be at the rate of four-thousand dollars ($4,000.00) per calendar day for failure of the Contractor to complete the work within the Construction Schedule. No credit shall be given for early completion of the work.

19. BIDS TO BE RETAINED

No bid may be withdrawn after the scheduled closing time for the receipt of bids for a period of sixty (60) days pending the execution of a Contract by the Successful Bidder. Should the Successful Bidder default and not execute a Contract, the Contract will be offered to the next lowest responsible, responsive Bidder.

20. DELIVERY LOCATION

The prices quoted shall include delivery of any Contractor-furnished materials and equipment to the project site, and complete installation of said materials and equipment and installation of the Owner- furnished materials. The location of the distribution facilities is shown on the Vicinity Map in the Appendices.

21. FORM OF PROPOSAL

Those bids not received on the Form of Proposal contained herein will be considered unresponsive. The forms shall be filled out completely. Any omissions may cause the entire Proposal to be rejected.

22. CONTRACTOR'S INSURANCE

22.1. General Liability: Commercial General Liability Insurance, (with coverage consistent with ISO Form CG 00 01 12 07 or its equivalent) with a limit of not less than One Million Dollars ($1,000,000) per occurrence and Two Million Dollars ($2,000,000) per project or per location general aggregate, and a deductible or self-insured retention not to exceed Twenty-five Thousand Dollars ($25,000) per occurrence, covering liability for bodily injury and property damage, arising from premises, operations, independent contractors, personal injury/advertising injury, contractual liability, and products/completed operations for not less than two (2) years from the Substantial Completion Date.

22.2. Automobile Liability: Commercial Automobile Liability Insurance, including coverage for liability arising out of the use of owned (if any), non-owned, leased or hired automobiles, for both bodily injury and property damage in accordance with Applicable Legal Requirements, with a limit of not less than One Million Dollars ($1,000,000) combined single limit per occurrence.

22.3. Workers Compensation: Worker's Compensation Insurance, with statutory limits, covering all of Subcontractor's employees, on terms and conditions as required by applicable Law and imposed by worker's compensation, occupational disease or similar laws, including the Longshore and Harbor Workers' Act, the Federal Employers' Liability and the Jones Act, if applicable.

22.4. Employers Liability: Employers' Liability Insurance with limits of not less than One Million Dollars ($1,000,000) each accident for bodily injury by accident, One Million Dollars ($1,000,000) each employee for bodily injury by disease, and One Million Dollars ($1,000,000) policy limit.

22.5. Umbrella Liability: Subcontractor must provide an Umbrella form (not Excess Liability form) that provides additional liability for underlying General Liability, Auto Liability, and Employer Liability.

22.5.1. Level 1 Contracts (Contract Value $200,000 to $499,999) - $1,000,000

22.5.2. Level 2 Contracts (Contract Value $500,000 to $999,999) - $3,000,000

22.5.3. Level 3 Contracts (Contract Value $1,000,000 & up) - $5,000,000

23. CONTRACTOR'S LICENSE

In accordance with the State of North Carolina General Statues, Contractors performing work of this caliber in the State must be licensed to do so. A current copy of the Contractor's State of North Carolina Board for General Contractor's License must be submitted with this

Proposal in the Form of Proposal. Additionally, a valid license must be maintained during the course of the work.

Contractor represents and warrants that it is fully experienced in projects of the nature, scope and magnitude of the Work, properly qualified, registered, licensed, equipped, organized and financed to perform the Work.

[Balance of Page Left Blank Intentionally]

GENERAL CONDITIONS

1. DRAWINGS AND SPECIFICATIONS

The Drawings and Specifications are complementary, one to the other. That which is shown on the Drawings or called for in the Specifications shall be as binding as if it were both called for and shown. The intention of the Drawings and Specifications is to include all labor, materials, transportation, equipment and any and all other items necessary to do a complete job which may include manufactured items and field service assistance. In case of discrepancy or disagreement in the Contract, the order of precedence shall be: Contract, Specifications, Drawings.

2. CLARIFICATIONS AND DETAILED DRAWINGS

In such cases where the nature of the work requires clarification by the Engineer, such clarification shall be furnished by the Engineer with reasonable promptness by means of written instructions or Detail Drawings or both. Clarifications and Drawings shall be consistent with the intent of Contract Documents and shall become a part thereof.

3. CHANGE OF DRAWINGS AND/OR SPECIFICATIONS

3.1. The Owner, or the Engineer on behalf of the Owner, may make changes to Drawings and/or Specifications after award of the Contract or while construction is in progress. The compensation for such changes shall be agreed upon in writing between the Contractor and the Owner prior to commencement of work involving the change. No payment shall be made to the Contractor for correcting work not in compliance with Specifications. Once the change of work has been agreed upon between all parties, the Engineer will initiate a change order. Change order pricing shall be based on unit pricing provided in this bid.

3.2. Records of conditions above and below ground, water records or other observations which may have been made by or for Owner shall be made available to Contractor for its information, upon request. Site sub-surface conditions which differ materially from the results reasonably indicated in any reports furnished by Owner or undertaken by Contractor shall be deemed to be changed work.

3.3. Except as otherwise set forth in the Contract, all loss or damage to Contractor arising out of the Work or from the action of the elements, or from any unforeseen circumstance in the prosecution of the Work including inefficiencies or claims of inefficiencies, shall be sustained and borne by Contractor at its own cost and expense.

4. COPIES OF BID DOCUMENTS

The Engineer will furnish free of charge to each pre-qualified Bidder one (1) copy of bid documents. Additional sets of these Specifications for approved Bidders and sets for Bidders seeking approval may be obtained upon request for a non-refundable payment of Fifty Dollars ($50) per set.

5. WORKING DRAWINGS AND SPECIFICATIONS AT THE JOB SITE

Contractor shall maintain, in readable condition at his office, one (1) complete set of as-built working Drawings and Specifications for his work. Such Drawings and Specifications shall be available for use by the Engineer or Owner. During construction, the Contractor will work diligently to keep the Owner abreast of electric system conditions, so as not to interfere with normal or emergency operations.

6. OWNERSHIP OF DRAWINGS AND SPECIFICATIONS

All Drawings and Specifications are instruments of service and remain the property of the Engineer whose name appears thereon. The use of these instruments on work other than this Contract without permission is prohibited. All copies of Drawings and Specifications other than Contract copies shall be returned to the Engineer upon request after completion of the work.

7. MATERIALS, EQUIPMENT, AND EMPLOYEES

7.1. The Contractor shall, unless otherwise specified, supply and pay for all labor, equipment, transportation, tools, apparatus, lights, heat, sanitary facilities, water, and incidentals necessary for the entire proper and substantial completion of his work. The Contractor shall install, maintain, and remove all equipment of the construction and be responsible for the safe, proper, and lawful construction, maintenance, and use of same. The Contractor shall construct, in the best and most workmanlike manner, a complete job and everything incidental thereto, as shown on the Plans, stated in the Specifications, or reasonably implied there from, all in accordance with the Contract Documents. Some of the major material items required for the work will be furnished by the Owner as outlined in the Technical Specifications. All other necessary materials are to be furnished by the Contractor as outlined in the Technical Specifications.

7.2. The Contractor shall not re- use any "removed" materials in the completion of this project unless indicated as a transfer unit on the construction drawings. Materials damaged or lost during construction of the work due to carelessness of the Contractor's personnel, shall be replaced in kind by the Contractor at no cost to the Owner.

7.3. If at any time during the construction and completion of the work covered by these Specifications, the conduct of any workman of the various crafts is adjudged ungentlemanly and a nuisance to the Owner or the Engineer, or if any workman is considered incompetent or detrimental to the work, the Contractor shall order such parties to be immediately removed from the grounds.

7.4. Any superintendent or foreman of the Contractor who ignores or refuses to follow written instructions of the Owner or the Engineer or his representative at the site shall be immediately removed and replaced.

7.5. The Contractor shall always ensure that he has sufficient crew compliments, both in terms of numbers and experience of personnel to perform work tasks safely. both for workers and the general public. Any instance noted to the contrary of this requirement may result in the complete shutdown of work on the project.

8. ROYALTIES, LICENSE, AND PATENTS

It is the intention of the Contract Documents that the work covered herein will not constitute in any way on an infringement on any patent whatsoever. The Contractor shall protect and save harmless the Owner against suit on account of alleged or actual infringement. The Contractor shall pay all royalties and/or license fees required on account of patented articles or processes, whether the patent rights are evidenced hereinafter.

9. INDEMNIFICATION

Bidder agrees to indemnity and save GUC of the City of Greenville, Pitt County, North Carolina, and the City of Greenville, North Carolina, its co-owners, joint-venturers, agents, employees, and insurance carriers harmless from any and all Third Party claims, actions, costs, expenses, including reasonable attorney fees, judgments, or other damages resulting from injury to any person (including injury resulting in death), or damage (including loss or destruction) to third party tangible property arising out of the negligent performance of the terms of this Contract by Bidder; including, but not limited to, Bidder's employees, agents, subcontractors, and others designated by Bidder to perform work or services in, about, or attendant to, the work and services under the terms of this Contract. Bidder shall not be held responsible for any losses, expenses, claims, subrogation, actions, costs, judgments, or other damages, directly and proximately caused by the negligence of Greenville Utilities Commission of the City of Greenville, Pitt County, North Carolina. Insurance covering this indemnity agreement by Bidder in favor of Greenville Utilities Commission of the City of Greenville, Pitt County, North Carolina, and the City of Greenville, North Carolina, shall be provided by the Bidder.

10. SURVEYS

Unless otherwise specified, the Owner, will furnish all surveys and locations for locating the principal component parts of the work. Stakes missing at the time of construction will be replaced within a reasonable amount of time after notification by the Contractor.

11. UNCORRECTED FAULTY WORK

The Contractor shall be notified of faulty or damaged work and shall have the option to respond in a reasonable period. Should the correction of faulty or damaged work be considered inadvisable or inexpedient by the Owner or the Engineer, the Owner shall be reimbursed by the Contractor for the same by a deduction in the Contract prices arrived at by a fair estimate of the probable cost of correction, approved by the Engineer.

12. DELAYS AND EXTENSION OF TIME

12.1. The time to be allowed for construction of these facilities is stated in the Instructions to Bidders. The Contractor, upon notice of award of Contract, shall prepare a construction schedule based on the allowed time, and submit such schedule to the Engineer for approval. A Pre-Construction Conference will be scheduled for all parties concerned.

12.2. If the Contractor is delayed at any time in the progress of the work by any act of negligence by the Owner or the Engineer, or by any separate Contractor employed by the Owner or by changes ordered in the work, then the time of completion shall be extended for such reasonable time as the Engineer may decide.

12.3. No extension of time for completion will be made for ordinary delays and accidents. Extensions may be granted for delays ordered by the Owner or the Engineer if the request has been made in writing within forty-eight (48) hours after the order to cease work has been given.

13. LIQUIDATED DAMAGES

Time is of the essence, and it is critical that the work be performed on schedule and time is allowed for the completion of the work in the Contract Agreement included herewith. Damages for delay shall be at the rate of four-thousand dollars ($4,000.00) per calendar day

for failure of the Contractor to complete the work within the Construction Schedule. No credit shall be given for early completion of the work.

14. CORRECTION OF WORK BEFORE FINAL PAYMENT

14.1. Any work, materials, or other parts of the work which have been condemned or declared not in accordance with the Contract by the Owner or the Engineer shall be removed from the work site by the Contractor and shall be immediately replaced by new work in accordance with the Contract at no additional cost to the Owner. Work or property of others or the Owner damaged or destroyed by virtue of such faulty work shall be made good at the expense of the Contractor whose work is faulty.

14.2. Correction of condemned work described above shall commence within twenty-four (24) hours after receipt of notice from the Owner or the Engineer and shall be pursued to completion.

14.3. Final payment will not be made until certificates of the engineer have been duly issued.

15. CORRECTION OF WORK AFTER FINAL PAYMENT

Neither the final certificate, final payment, acceptance of the premises by the Owner, nor any provision of the Contract, nor any other act or instrument of the Owner or Engineer shall relieve the Contractor from responsibility for negligence, or faulty materials or workmanship, or failure to comply with the Drawings and Specifications. He shall correct or make good any defects due thereto and repair any damage resulting there from which may appear during the period of the guarantee following final acceptance of the work by the Owner. The Owner will report any defects as they may appear to the Engineer who will give the instructions for a time limit for completion of corrections to the Contractor.

16. THE OWNER'S RIGHT TO PERFORM WORK

16.1. The Owner may perform or have performed by others work which is described in the Specifications to be performed by the Contractor, due to early delivery of equipment prior to the execution of this Contract. Upon the execution of the contract, the work performed will be deducted from the Contractor's price by the unit price set forth in the *Form of Proposal.*

16.2. If during the progress of the work or during the period of guarantee, the Contractor fails to execute the work properly or to perform any provision of the Contract, the Owner, after five (5) days' written notice to the Contractor from the Engineer or the Owner, may perform or have performed that portion of the work and may deduct the cost thereof from any amounts due or to become due the Contractor, such action and cost of same having been first approved by the Engineer. Should the cost of such action of the Owner exceed the amount due or to become due the Contractor, then the Contractor or his surety, or both, shall be liable for and shall pay to the Owner the amount of said excess.

17. CONTRACTOR'S AFFIDAVIT

The final payment of retained amount due the Contractor on account of the Contract shall not become due until the Contractor has furnished to the Owner, with a copy to the Engineer, an affidavit signed, sworn and notarized to the effect that all payments for materials, services, or any other reason in connection with his Contract have been satisfied and that no claims or liens exist against the Contractor in connection with this Contract. In the event that the Contractor cannot obtain similar affidavits from Subcontractors to protect the Contractor and the Owner from possible liens or claims against the Subcontractor, the Contractor shall state in his affidavit that no claims or liens exist against any Subcontractor to the best of his (the Contractor's) knowledge and if any appear afterwards, the Contractor shall save the Owner harmless on account thereof.

18. ASSIGNMENTS

The Contractor shall not assign any portion of this Contract nor subcontract it in its entirety. Except as may be required under terms of the Payment and/or Performance Bond, no funds or sums of money due or to become due the Contractor under this Contract may be assigned.

19. GUARANTEE

The Contractor shall guarantee his work against defect due to faulty workmanship or negligence for a period of two (2) years following final acceptance of the work. He shall make good such defective workmanship and any damage resulting therefrom without cost to the Owner.

20. ENGINEER'S STATUS

The Engineer shall, within a reasonable time after their presentation to him, make decisions on all claims of the Contractor and on all other matters relating to the execution and progress

of the work or the interpretation of the Contract Documents. All such decisions by the Engineer shall be final.

21. ENGINEER'S DECISIONS

The Engineer shall, within a reasonable time after their presentation to him, make decisions on all claims of the Contractor and on all other matters relating to the execution and progress of the work or the interpretation of the Contract Documents. All such decisions by the Engineer shall be final.

22. RIGHT-OF-WAY

The Owner will obtain all easements and/or rights-of-way required for the project.

23. ACCIDENTS

The Contractor shall provide at the site such equipment and medical facilities as are necessary to supply first-aid service to anyone who may be injured in connection with the work. The Contractor will provide a written report to the Owner of all accidents within twenty-four (24) hours of the event.

24. EQUAL EMPLOYMENT OPPORTUNITY

During the performance of this Contract, the Contractor agrees as follows:

24.1. The Contractor will not discriminate against any employee or applicant for employment because of race, color, religion, sex, national origin, political affiliation or belief, age, or physical handicap. The Contractor will take affirmative action to ensure that applicants are employed and that employees are treated during employment without regard to race, color, religion, sex, national origin, political affiliation or belief, age, or physical handicap. Such action shall include but not be limited to the following employment, upgrading, demotion or transfer, recruitment or recruitment advertising, layoff or termination, rates of pay or other forms of compensation and selection for training, including apprenticeship. The Contractor agrees to post in conspicuous places available to employees and applicants for employment notices setting forth the provisions of the nondiscrimination clause.

24.2. The Contractor will, in all solicitations or advertisements for employees placed by or on behalf of the Contractor, state that all qualified applicants will receive

consideration for employment without regard to race, color, religion, sex, national origin, political affiliation or belief, age, or physical handicap.

24.3. The Contractor will send to each labor union or representative of workers with which he has a collective bargaining agreement or other contract or other understanding, a notice advertising the labor union or workers' representative of the Contractor's commitments under the Equal Employment Opportunity Section of this Contract and shall post copies of the notice in conspicuous places available to employees and applicants for employment.

24.4. In the event of the Contractor's noncompliance with the nondiscrimination clauses of this Contract or with any of such rules, regulations, or orders, this Contract may be canceled, terminated, or suspended in whole or in part and the Contractor may be declared ineligible for further Owner contracts.

25. MEDIATION/BINDING ARBITRATION

25.1. In the event of any dispute between the Parties, the Parties agree to submit any dispute to non-binding mediation before a mutually agreeable Mediator prior to initiating litigation. If the Parties are unable to agree upon a Mediator within thirty (30) days after demand therefore, either Party may petition a Court of competent jurisdiction for the designation of a qualified Mediator for these purposes. Each Party shall bear its own costs and expenses of participating in the mediation (including, without limitation, reasonable attorneys' fees), and each Party shall bear one-half (1/2) of the costs and expenses of the Mediator. Unless otherwise agreed, the Parties will hold the mediation in Greenville, North Carolina. The matters discussed or revealed in the mediation session shall not be disclosed in any subsequent litigation.

25.2. In the event the matter is not resolved in mediation, either Party may request arbitration. The parties shall jointly select an Arbitrator and shall be bound by the decision of the Arbitrator with respect to any dispute between the parties with respect to this Agreement. If the parties are unable to mutually agree upon an Arbitrator, the Parties shall each select an Arbitrator, and the two Arbitrators so selected shall select a third Arbitrator, and the decision of the majority of the Arbitrators shall be conclusive and binding upon the Parties. The Parties at all times agree to equally split the costs of any Arbitrator(s) selected in an effort to resolve the dispute between the Parties. Any party desiring to resolve a dispute under the terms of this Agreement shall notify the other Party in writing, and the Parties shall seek to agree upon a mutually agreed-upon Arbitrator within a

period of ten (10) days from the date of such written demand. If the Parties are unable to agree within such ten (10) day period, the Parties shall each select an Arbitrator, and the two (2) Arbitrators so selected shall select a third Arbitrator within fifteen (15) days from the date of the written demand for arbitration, and a decision shall be rendered by the Arbitrator(s) so selected within five (5) days after such Arbitrator(s) is selected.

26. GOVERNMENT RESTRICTIONS

In the event any Governmental restrictions may be imposed which would necessitate alteration of the material, quality, workmanship, or performance of the items offered on this bid prior to their delivery, it shall be the responsibility of the successful Bidder to notify the GUC Procurement Manager, at once, indicating in its letter the specific regulation which required such alterations. GUC reserves the right to accept any such alterations, including any price adjustments occasioned thereby, or, in the sole discretion of GUC, to cancel the contract.

27. PATENTS AND COPYRIGHTS

The Bidder shall hold and save GUC, its officers, agents, and employees, harmless from liability of any kind, including costs and expenses, including reasonable attorney fees, on account of any copyrighted articles or any patented or unpatented invention, device or appliance manufactured or used in the performance of this contract.

28. PATENT AND COPYRIGHT INDEMNITY

The Bidder will defend or settle, at its own expense, any action brought against GUC to the extent that it is based on a claim that the product(s) provided pursuant to this agreement infringe any U.S. copyright or patent; and will pay those costs, damages, and attorney fees finally awarded against GUC in any such action attributable to any such claim, but such defense, settlements, and payments are conditioned on the following: (1) that Bidder shall be notified promptly in writing by GUC of any such claim; (2) that Bidder shall have sole control of the defense of any action on such claim and of all negotiations for its settlement or compromise; (3) that GUC shall cooperate with Bidder in a reasonable way to facilitate the settlement of defense of such claim; (4) that such claim does not arise from GUC modifications not authorized by the Bidder or from the use of combination of products provided by the Bidder with products provided by GUC or by others; and (5) should such product(s) become, or in the Bidder's opinion likely to become, the subject of such claim of infringement, then GUC shall permit Bidder, at Bidder's option and expense, either to procure for GUC the right to continue using the product(s), or replace or modify the same so

that it becomes non-infringing and performs in a substantially similar manner to the original product.

29. EXCEPTIONS

All proposals are subject to the terms and conditions outlined herein. All responses will be controlled by such terms and conditions and the submission of other terms and conditions, price catalogs, and other documents as part of a Bidder's response will be waived and have no effect on this Request for Proposal or any other contract that may be awarded resulting from this solicitation. The submission of any other terms and conditions by a Bidder may be grounds for rejection of the Bidder's proposal. The Bidder specifically agrees to the terms and conditions set forth in this set of Terms and Conditions by affixing its name on the signatory page contained herein.

30. CONFIDENTIAL INFORMATION

GUC will keep trade secrets which the Bidder does not wish to be disclosed, except as provided by statute and rule of law. Each page shall be identified in boldface at the top and bottom as "CONFIDENTIAL" by the Bidder. Cost information shall not be deemed confidential. The determination of whether a matter is confidential will be determined by North Carolina law.

31. ASSIGNMENT

No assignment of the Bidder's obligations or the Bidder's right to receive payment hereunder shall be permitted without the express written consent of GUC, provided however, upon written request approved by the GUC Procurement Manager, solely as a convenience to the Bidder, GUC may:

31.1. Forward the Bidder's payment check directly to any person or entity designated by the Bidder, and

31.2. Include any person or entity designated by Bidder as a joint payee on the Bidder’s payment check.

31.3. In no event shall such approval and action obligate GUC to anyone other than the Bidder, and the Bidder shall remain responsible for fulfillment of all contract obligations.

32. AVAILABILITY OF FUNDS

Any and all payments of compensation of this specific transaction and any continuation or any renewal or extension are dependent upon and subject to the allocation of GUC funds for the purpose set forth in this Agreement.

33. GOVERNING LAWS

All contracts, transactions, agreements, etc., are made under and shall be governed by and construed in accordance with the laws of the State of North Carolina.

34. ADMINISTRATIVE CODE

Bids, proposals, and awards are subject to applicable provisions of the North Carolina Administrative Code.

35. EXECUTION

In the discretion of GUC, failure of a duly authorized official of Bidder to sign the Signatory Page may render the bid invalid.

36. CLARIFICATIONS/INTERPRETATIONS

Any and all questions regarding these Terms and Conditions must be addressed to the GUC Procurement Manager. Do not contact the user directly. **These Terms and Conditions are a complete statement of the parties' agreement and may only be modified in writing signed by Bidder and the GUC Procurement Manager.**

37. SITUS

The place of all contracts, transactions, agreements, their situs and forum, shall be North Carolina, where all matters, whether in contract or tort, relating to the validity, construction, interpretation, and enforcement shall be determined.

38. TERMINATION OF AGREEMENT

GUC or Bidder may terminate this Agreement for just cause at any time. Bidder will be paid for all time and expenses incurred as of the termination date. Termination for just cause by either party shall be by certified letter and shall be effective thirty (30) days after signed and

acknowledged receipt of said letter. Just cause shall be based on reasonable grounds, and there must be a fair and honest cause or reason for such action. The causes for termination, include, but are not limited to:

38.1. Bidder's persistent failure to perform in accordance with the Terms and Conditions.

38.2. Bidder's disregard of laws and regulations related to this transaction

38.3. Bidder's substantial violation of the provisions of the Terms and Conditions.

39. FORCE MAJEURE

Neither party shall be considered in default in the performance of its obligations hereunder to the extent that the performance of any such obligation is prevented or delayed by any cause, existing or future, which is beyond the reasonable control of such party. In any such event of force majeure, the parties shall advise each other of such event, and the parties shall negotiate an equitable adjustment to their respective obligations under this Agreement.

40. INTEGRATED CONTRACT

These Terms and Conditions, Instructions to Bidders, Specifications, and the selected Bidder's bid represents the entire contract between the Parties. No verbal or other written agreement(s) shall be held to vary the provisions of this Agreement.

41. CONTRACT PROVISIONS

Each of the provisions of these Terms and Conditions shall apply to the full extent permitted by law, and the invalidity in whole or in part of any provision shall not affect the remainder of such provision or any other provisions.

42. E-VERIFY

E-Verify- I understand that E-Verify is the federal E-Verify program operated by the United States Department of Homeland Security and other federal agencies, or any successor or equivalent program used to verify the work authorization of newly hired employees pursuant to federal law in accordance with NCGS §64-25 et seq. I am aware of and in compliance with

the requirements of E- Verify and Article 2 of Chapter 64 of the North Carolina General Statutes. To the best of my knowledge, any subcontractors employed by me as a part of this contract are in compliance with the requirements of E-Verify and Article 2 of Chapter 64 of the North Carolina General Statutes.

43. IRAN DIVESTMENT ACT CERTIFICATION

By acceptance of this purchase order, Vendor/Contractor certifies that, as of the date of the purchase order or contract, it is not on the Final Divestment List as created by the State Treasurer pursuant to N.C.G.S. § 143-6A-4. In compliance with the requirements of the Iran Divestment Act and N.C.G.S. § 143C-6A-5(b), Vendor/Contractor shall not utilize in the performance of the contract any subcontractor that is identified on the Final Divestment List.

44. UNIFORM GUIDANCE

Contracts funded with federal grant or loan funds must be procured in a manner that conforms with all applicable federal laws, policies, and standards, including those under the Uniform Guidance (2 C.F.R. Part 200).

45. NOTICES

Notices to the Parties should be sent to the names and addresses specified below:

Mr. Cleve Haddock, Lifetime CLGPO
Procurement Manager
Greenville Utilities Commission
P.O. Box 1847
Greenville, NC 27835-1847

SPECIAL CONDITIONS

1. DEFECTIVE WORKMANSHIP

The acceptance of any workmanship by the Owner shall not preclude the subsequent rejection thereof if such workmanship shall be found to be defective after installation, and any such workmanship found defective before final acceptance of the work or within two (2) years after completion shall be remedied or replaced, as the case may be, by and at the expense of the Contractor. In the event of failure by the Contractor to do so, the Owner may remedy such defective workmanship and in such event the Contractor shall pay to the Owner the cost and expense thereof. The Contractor shall not be entitled to any payment hereunder so long as any defective workmanship, of which the Contractor shall have had notice, shall not have been remedied or replaced, as the case may be.

2. MATERIALS

2.1. At or prior to the commencement of construction, the Owner shall make available to the Contractor all materials which the Owner has on hand, and from time to time as such additional deliveries of materials, if any, are received by the Owner, the Owner shall make such materials available to the Contractor; Provided, however, that the Contractor or his authorized representative shall give to the Owner a receipt in such form as the Owner shall approve for all materials furnished to the Contractor by the Owner. Upon completion of the project, the Contractor shall return all materials furnished by the Owner which are in excess of those required for the construction. Excess will be determined by comparison of Contractor's material receipts with final inventory as approved by the Owner. The Contractor shall also return to the Owner all material, usable and scrap, removed during construction. The Contractor will reimburse the Owner, at the current invoice cost to the Owner, for loss and/or breakage resulting from Contractor's negligence, of materials furnished to the Contractor by the Owner.

2.2. The winning Bidder will use the material package supplied by the Owner. The structures and equipment lists are located in the Appendices.

2.3. The project foundation details (as applicable) will be provided to the Contractor prior to start of construction.

3. DEFECTIVE MATERIALS (SUPPLIED BY CONTRACTOR)

3.1. All materials supplied by the Contractor shall be subject to the inspection, tests and approval of the Owner. The Contractor shall furnish all information required concerning the nature or source of any materials and provide adequate facilities for testing and inspecting the materials at the plant of the Contractor.

3.2. The materials furnished hereunder shall become the property of the Owner when delivered at the point to which shipment is to be made. The Owner may, however, reject any materials and/or warranties of the Contractor and manufacturers. Recognition and subsequent rejection of any defective materials may occur either before or after incorporation of such materials into the work, provided such rejection is made within one (1) year of date of delivery of the materials. Upon any such rejection, the Contractor shall replace the rejected materials with materials complying with the Specification for Materials and warranties at the substation site. The Owner shall return the rejected materials F.O.B. truck at the same destination. In the event of the failure of the Contractor to so replace rejected materials, the Owner shall make such replacement and the cost and expense thereof shall be paid by and recoverable from the Contractor.

4. STORAGE OF MATERIALS

All material furnished by Owner shall be issued from the Owner's warehouse located at 701 Utility Way, Greenville, North Carolina. All driveways and public roadways must be kept clear. No parking, storage or staging of materials shall be placed in a driveway or roadway, causing said roadway impassable any time.

5. PROTECTION TO PERSONS AND PROPERTY

The Contractor shall always take all reasonable precautions for the safety of employees on the work and of the public, and shall comply with all applicable provisions of Federal, State, and Municipal safety laws and building and construction codes, as well as the safety rules and regulations of the Owner. All machinery and equipment and other physical hazards shall be guarded in accordance with the "Manual of Accident Prevention in Construction" of the Associated General Contractors of America unless such instructions are incompatible with Federal, State, or Municipal laws or regulations.

The following provisions shall not limit the generality of the above requirements:

5.1. The Contractor shall so conduct the construction as to cause the least possible obstruction of public highways or streets.

5.2. The Contractor shall provide and maintain all such guard lights and other protection for the public as may be required by applicable statutes, ordinances, and regulations or by local conditions.

5.3. The Contractor shall do all things necessary or expedient to protect properly any and all parallel, converging, and intersecting lines, joint line poles, highways, railways and any and all property of others from damage, and in the event that any such parallel, converging and intersecting lines, joint line poles, highways, railways or other property are damaged in the course of the construction of the line, the Contractor shall at his own expense immediately restore any or all of such damaged property to as good a state as before such damage occurred.

5.4. The Contractor shall enter and exit the right-of-way at those locations specified by Owner or the Engineer.

It shall be the responsibility of the Contractor to maintain safe and unobstructed control of traffic along all state roads, highways, and all other streets within the project area. The Contractor shall obtain sufficient and suitable traffic cones, barriers, warning signs, and other devices necessary to maintain a safe work environment for crews and the general public. Traffic control must be provided for in accordance with the Manual of Uniform Traffic Control Devices (MUTCD), the North Carolina Department of Transportation (NC D.O.T.) Supplement to the MUTCD, all local ordinances, and as approved by local and state authorities.

5.5. All ditches and access ways disturbed shall be returned to their pre-existing condition at the end of construction.

5.6. Any and all excess earth, rock, debris, underbrush, and other useless material shall be removed by the Contractor from the site of the work as rapidly as practicable as the work progresses.

5.7. Before beginning work in or around any areas where underground facilities are known to exist, the Contractor shall locate all such facilities including water, sewer, gas, telephone and electrical lines.

5.8. Upon violation by the Contractor of any provisions of this section, after written notice of such violation given to the Contractor by the Owner, the Contractor shall immediately correct such violation. Upon failure of the Contractor to do so, the Owner may correct such violation at the Contractor's expense.

5.9. The Contractor shall submit to the Owner monthly reports in duplicate of all accidents, giving such data as may be prescribed by the Owner.

6. SUPERVISION AND INSPECTION

6.1. The Contractor shall cause the construction work to receive constant supervision by a competent superintendent (hereinafter called the "Superintendent") who shall be present at all times during working hours where construction is being carried on. The Contractor shall also employ, in connection with the construction of the substation capable, experienced, and reliable foremen and such skilled workmen as may be required for the various classes of work to be performed. Directions and instructions given to the Superintendent by the Owner shall be binding upon the Contractor.

6.2. The Owner reserves the right to require the removal from the project of any employee of the Contractor if, in the judgment of the Owner, such removal shall be necessary in order to protect the interest of the Owner. The Owner shall have the right to require the Contractor to increase the number of his employees and to increase or change the amount or kind of tools and equipment if at any time the progress of the work shall be unsatisfactory to the Owner; the failure of the Owner to give any such directions shall not relieve the Contractor of his obligations to complete the work within the time and in the manner specified in this Proposal.

6.3. The manner of performance of the work, and all equipment used therein, shall be subject to the inspection, tests and approval of the Owner. The Contractor shall have an authorized agent accompany the Owner when final inspection is made and, if requested by the Owner, when any other inspection is made.

6.4. In the event that the Owner shall determine that the construction contains or may contain numerous defects, it shall be the duty of the Contractor, if requested by the Owner to have an inspection made by the Engineer for the purpose of determining the exact nature, extent, and location of such defects.

7. TEMPORARY CONSTRUCTION

All temporary construction required to accomplish the work covered in these Specifications shall be the sole responsibility of the Contractor. The Contractor shall furnish all labor and materials necessary for temporary construction including the installation and removal of structures, poles, insulators, hardware, guys, anchors, etc. All materials used for temporary construction shall be removed from the site as soon as practicable and the site restored to as good a state as before such construction. All temporary materials supplied by the Contractor will remain the property of the Contractor. All temporary construction shall be performed and shall adhere to the same safety and code requirements as the proposed work and shall be covered by all requirements of these Plans, Specifications, and Contract Documents.

No extra pay item will be issued for temporary construction, or for subsequent removal of same.

8. NORMAL WORK WEEK

8.1. The Contractor shall provide the Owner quoted prices on a per-hour basis, for various personnel and equipment, assuming a normal work week as being forty (40) hours.

8.2. The Contractor shall state in the Proposal his normal work week for the project.

8.3. Work on weekends or generally accepted holidays will only be allowed if specific outage arrangements are required or the Contractor falls behind in meeting the project's scheduled completion date.

8.4. The Contractor will not be paid for inclement weather days or for travel time to and from the job site, unless expressly requested by the Contractor as a written stipulation to his original Proposal.

8.5. The Contractor shall remain on the project until completion. The Owner will not approve requests for releasing the contractor for storm or other projects.

9. JOB-SITE OBLIGATIONS

9.1. Except as otherwise provided in the Contract, necessary sanitary conveniences for use by the Contractor's employees and Subcontractors at the Jobsite shall be furnished and maintained by the Contractor in such manner and at such

locations as shall be approved by the Company Representative and their use shall be strictly enforced.

9.2. The Contractor shall, at all times, keep its work areas in a neat, clean, and safe condition. The Contractor shall be responsible for continuous clean up and removal of its trash, debris, waste materials and scrap and disposal of same off the Jobsite. Upon completion of any portion of the Work, the Contractor shall immediately remove all its equipment, construction plant, temporary structures and surplus materials not to be used at or near the same location during later stages of the Work. Upon completion of the Work and before final payment is made, the Contractor shall, at its expense, satisfactorily dispose of all plant, buildings, rubbish, unused materials, and other equipment and materials belonging to it or used in the performance of the Work, including return to the Owner's warehouse or designated lay down area(s), at the Owner's option of any salvageable materials for which the Owner has reimbursed the Contractor or that has been supplied by the Owner for incorporation into the Work but not used; and the Contractor shall leave the premises in a neat, clean and safe condition acceptable to the Company Representative. In the event of the Contractor's failure to comply with the foregoing, the same may be accomplished by the Owner at the Contractor's expense.

9.3. The Owner reserves the right to authorize its agents or designees to enter the jobsite as it may elect for the purpose of inspecting the work or constructing or installing such collateral work as it may desire, or testing, boring or surveying, or any other purpose.

9.4. The Contractor understands and agrees that duly authorized representatives of government agencies having appropriate jurisdiction may enter the Jobsite at any time and from time to time.

9.5. If any Work or part thereof shall be covered contrary to the requirements of the Contract or the request of the Owner or Engineer, it must, if required by the Company Representative, be uncovered for observation and inspection and covered again at the Contractor's sole expense.

9.6. If any other Work that the Company Representative has not specifically requested to observe and inspect prior to being covered has been covered, the Owner or Engineer may request to see such Work or part thereof and it shall be uncovered by the Contractor. If such Work or part thereof is found to be in accordance with the Contract, the cost of uncovering and covering again shall,

by appropriate Change Form, be charged to the Owner. If such Work or part thereof fails to meet the requirements of the Contract, the Contractor shall pay all costs of uncovering, correcting, and covering again and any additional costs resulting there from.

9.7. The Contractor shall conduct daily and weekly on-site safety meetings at the beginning of each work period. These meetings should not preclude the Contractor from conducting tailgate safety meetings before each new work period, after break, different work assignments, etc. as determined by OSHA and other applicable safety laws and regulations. In addition, the Contractor shall be required to attend onsite safety meetings with the Owner.

9.8. All personnel / visitors / individuals shall have a safety briefing by the Contractor prior to entering the energized substation area.

9.9. The Contractor shall facilitate a formal safety program for all individuals entering the site.

9.10. The Contractor shall provide the Owner a copy of the Contractor's Safety Manual, outlining policies, procedures, documentation and training. The Owner will provide the Contractor with a copy of the Owner's Safety Manual. The Contractor shall perform the work using the more stringent of the two policies.

10. WORK SEQUENCING

10.1. The Contractor shall perform relocation work in a continuous and sequential manner that allows for timely transfer of existing loads, service cutovers, and retirements as construction progresses from Detail Construction Drawing to Detail Construction Drawing. Continuous or extended overhead construction without completing associated cutovers, load transfers, and placing facilities in service will not be permitted.

10.2. The Contractor shall complete each segment of work—including all transfers, cutovers, removals, and associated restoration—prior to advancing to subsequent segments, unless otherwise approved by the Owner or its representative Engineer. Work sequencing shall be coordinated with the Engineer and the Utility Owner to maintain service continuity and minimize prolonged exposure of non-energized and/or temporary facilities.

10.3. The Contractor shall submit, upon request, a proposed work sequence or schedule showing planned limits of active work, load transfers, and cutover activities. Failure to maintain acceptable sequencing or to complete cutovers in a timely manner may result in suspension of work until corrective measures are approved by the Owner or its representative Engineer.

11. TRAFFIC CONTROL AND WORK HOUR RESTRICTIONS

11.1. The Contractor shall complete the required work of installing, maintaining and removing the traffic control devices for lane closures and restoring traffic to the existing traffic pattern. The Contractor shall not close or narrow a lane of traffic on Old Tar Road during the following time restrictions:

11.1.1. DAY AND TIME RESTRICTIONS

11.1.1.1. Monday through Friday, 6:00 AM to 9:00 AM and 4:00 PM to 6:00 PM.

11.2. In addition, the Contractor shall not close or narrow a lane of traffic on ANY ROAD, detain and/or alter the traffic flow on or during holidays, holiday weekends, special events, or any other time when traffic is unusually heavy, including the following schedules:

11.2.1. HOLIDAY AND HOLIDAY WEEKEND LANE CLOSURE RESTRICTION

11.2.1.1. For unexpected occurrence that creates unusually high traffic volumes, as directed by the Engineer.

11.2.1.2. For New Year's Day, between the hours of 6:00 AM December 31st and 6:00 PM January 2nd. If New Year's Day is on a Friday, Saturday, Sunday or Monday, then until 6:00 PM the following Tuesday.

11.2.1.3. For Easter, between the hours of 6:00 AM Thursday and 6:00 PM Monday.

11.2.1.4. For Memorial Day, between the hours of 6:00 AM Friday and 6:00 PM Tuesday.

11.2.1.5. For Independence Day, between the hours of 6:00 AM the day before Independence Day and 6:00 PM the day after Independence Day. If Independence Day is on a Friday, Saturday, Sunday or Monday, then between the

hours of 6:00 AM the Thursday before Independence Day and 6:00 PM the Tuesday after Independence Day.

11.2.1.6. For Labor Day, between the hours of 6:00 AM Friday and 6:00 PM Tuesday.

11.2.1.7. For Thanksgiving Day, between the hours of 6:00 AM Tuesday and 6:00 PM Monday.

11.2.1.8. For Christmas, between the hours of 6:00 AM the Friday before the week of Christmas Day and 6:00 PM the following Tuesday after the week of Christmas Day.

11.3. No work shall be performed within the NCDOT right-of-way outside the approved timeframes or without prior authorization. Holidays and holiday weekends shall include New Year's, Easter, Memorial Day, Independence Day, Labor Day, Thanksgiving, and Christmas. The Contractor shall schedule his work so that lane closures will not be required during these periods, unless otherwise directed by the Engineer.

11.4. The Contractor is responsible for obtaining and maintaining all necessary permits, traffic control plans, and approvals related to lane closures and work scheduling.

[Balance of Page Left Blank Intentionally]

CONTRACT AGREEMENT

THIS CONTRACT made this _____ day of _____, 2026, by _____, hereinafter called Bidder, and GREENVILLE UTILITIES COMMISSION (GUC) OF THE CITY OF GREENVILLE, PITT COUNTY, NORTH CAROLINA, a corporation, hereinafter called the Owner.

WITNESSETH

THAT WHEREAS, a Contract for

GREEVILLE UTILITIES COMMISSION
RELOCATION OF 12.47 KV DISTRIBUTION STRUCTURES AND 115 KV TRANSMISSION STRUCTURES ALONG EVANS RD FROM E. FIRE TOWER RD TO GREENVILLE BLVD

has recently been awarded to Bidder by the Owner at and for a total price of _____ AND 00/100 ($_____) named in the Bidder's Proposal attached hereto;

AND WHEREAS, it was provided in said award that a formal Contract would be executed by and between Bidder and Owner, evidencing the terms of said award, and that Bidder would commence the work to be performed under this agreement on a date to be specified in a written order of Owner, and would fully complete all work thereunder no later than 711 days from the date of contract.

NOW, THEREFORE, Bidder doth hereby covenant and agree with Owner that it will well and faithfully perform and execute such work and furnish such work and furnish such materials and equipment in accordance with each and every one of the conditions, covenants, stipulations, terms, and provisions contained in said Specifications in accordance with the Plans, at the total price named therefore in the Bidder's Proposal attached hereto, and will well and faithfully comply with and perform each and every obligation imposed upon it by said Plans and Specifications and the terms of said award.

Bidder shall promptly make payments to all laborers and others employed thereon.

Bidder shall be responsible for all damages to the property of the owner that may be consequent upon the normal procedure of its work or that may be caused by or result from the negligence of Bidder, its employees, or agents during the progress of or connected with the prosecution of the work, whether within the limits of the work or elsewhere. Bidder must restore all property so injured to a condition as good as it was when Bidder entered upon the work.

By execution of this Contract, both parties acknowledge the following conditions as a part of their respective obligations:

a) Governing Law – This Contract shall be construed and enforced in accordance with the laws of the State of North Carolina. All parties agree to the jurisdiction of the Courts of North Carolina with respect to an action or dispute arising between the parties.

b) Further Assurances – The parties hereto agree to execute and deliver any and all papers and documents which may be necessary to carry out the terms of this Contract.

c) Entire Contract – This Contract (including materials incorporated herein by reference) constitutes the entire agreement between the parties hereto and there are no agreements, representations, or warranties which are not set forth herein. All prior negotiations, agreements, and understandings are superseded hereby. This Contract may not be amended or revised except by a writing signed by all parties hereto. This Contract shall be construed and interpreted without any presumption either for or against the party who caused its preparation.

d) Binding Effect – This Contract shall be binding upon an inure to the benefit of the heirs, legal representatives, successors and assigns of the respective parties hereto, provided that this Contract and all rights hereunder may not be assigned by any party hereto without the written consent of the other party.

e) Time of Performance – Time is of the essence with regard to the performance of this Contract.

f) Survivability – The terms of this Contract shall survive execution and delivery of any deeds or bills of sale called for hereunder.

g) Headings – The headings in the paragraphs of this Contract are inserted for convenience only and do not constitute a part hereof.

Bidder shall furthermore be responsible for and required to make good at its expense any and all damages of whatever nature to persons or property arising during the period of the Contract caused by carelessness, neglect, or want of due precaution on the part of Bidder, its agents, employees, or workmen. Bidder shall also indemnify and save harmless the Owner, and the officers and agents thereof, from all third party claims, suits, and proceedings of every name and description which may be brought against the Owner, or the officers and agents thereof, for or on account of any injuries or damages to persons or property received or sustained by any person or persons, firm, or corporation, by or in consequence of any materials used in said work, to the extent caused by the negligence of Bidder, its agents, employees, servants, or workmen.

It is agreed and understood that the Notice to Prospective Bidders, Definitions, Instructions to Bidders, and Technical Specifications, the accepted Bidder's Proposal, and the enumerated addenda are incorporated in this Contract by reference and are an integral part thereof as set forth herein.

And the Owner doth hereby covenant and agree with Bidder that it will pay to Bidder, when due and payable under the terms of said Specifications and said award, the above-mentioned sum;

and that it will well and faithfully comply with and perform each and every obligation imposed upon it by said Specifications and the terms of said award.

Bidder shall, upon completion of all work awarded under this Contract, furnish to the Owner invoices or copies of invoices for all materials purchased for said work; and such invoices shall state the amount of North Carolina sales tax paid for said materials. Bidder shall also furnish the Owner and affidavit certifying the total costs of materials purchased for all work performed under the Contract and the total amount of state sales tax paid for said materials.

Whenever used herein, the singular shall include the plural, the plural the singular, and the use of any genders shall be applicable to all genders as the context may require.

[Balance of Page Left Blank Intentionally]

PROVIDE CURRENT LIABILITY INSURANCE CERTIFICATE(S)
Section I General Instructions, 24. Contractor's Insurance

COVERAGES:

1. Workmen's Compensation Insurance shall include all of the Bidder's employees employed at the site of the project under his contract. In case any class of employees engaged in hazardous work under this Contract at the site of the project is not protected under the Workmen's Compensation Statute, the Bidder shall provide adequate coverage for the protection of his employees not otherwise protected.

2. Public Liability and Property damage Insurance shall be in such amounts as to adequately protect the Owner and the Bidder from claims for damages for personal injury, including accidental death, as well as from claims for property damages which may arise from operations under this Contract, whether such operations be by himself or by anyone directly or indirectly employed by him. The amount of such insurance shall be for the following:

2.1. Public Liability Insurance for bodily injury or death $1,000,000 got one person, and $2,000,000 for each accident.

2.2. Property Damage Insurance $2,000,000 for each accident and $2,000,000 aggregate for accidents during the policy period.

3. Motor Vehicle Liability Insurance shall be for the following amounts:

3.1. Bodily injury or death $1,000,000 for one person and $2,000,000 for each accident.

3.2. Property damage is $2,000,000 for each accident.

Copies of Certificates of Insurance for all aforementioned policies shall be furnished by the Bidder and shall be attached to the respective pages of the Contract Agreement at the time of signing.

It shall be understood that the above required insurance shall not be canceled or changed until thirty (30) days after written notice of such termination or alteration has been sent by registered mail to the certificate holder. Each certificate must not terminate before the contract completion date.

CERTIFICATE HOLDER:

Greenville Utilities Commission
401 South Greene Street
Greenville, NC 27834
Contact: Mr. Cleve Haddock, Procurement Manager, Lifetime CLGPO
Phone: 252-551-1533

IN TESTIMONE WHEREOF, Bidder and Owner have duly signed and sealed this Contract.

BIDDER:

(Imprint Corporate Seal
Below this line)

_____(SEAL)

By _____(SEAL)

Title _____

ATTEST:

By: _____

Title: _____

GREENVILLE UTILITIES COMMISSION (GUC) OF THE CITY OF GREENVILLE, PITT COUNTY, NORTH CAROLINA

By _____
Anthony C. Cannon

Title General Manager/CEO

ATTEST:

By: _____
Amy Wade

Title: Executive Secretary

APPROVED AS TO FORM AND LEGALITY:

By: _____
Phillip R. Dixon

Title: General Counsel

CERTIFICATE OF ATTORNEY

GREENVILLE UTILITIES COMMISSION (GUC)
OF THE CITY OF GREENVILLE,
PITT COUNTY, NORTH CAROLINA

This is to certify I have examined the attached Contract Documents, and after such examination I am of the opinion that such Documents conform to the laws of the State of North Carolina, the execution of the Contract is in due and proper form, the representatives of the respective contracting parties have full power and authority to execute such contract on behalf of the respective contracting parties, and the foregoing agreements constitute valid and binding obligations on such parties.

By: _____
Phillip R. Dixon

Title: General Counsel

Date: _____

GREENVILLE UTILITIES COMMISSION
GREENVILLE, NORTH CAROLINA

RELOCATION OF 12.47 KV DISTRIBUTION STRUCTURES AND 115 KV TRANSMISSION STRUCTURES ALONG EVANS RD FROM E. FIRE TOWER RD TO GREENVILLE BLVD

FORM OF PROPOSAL
(*Provide two (2) copies)*

Respectfully submitted this _____day of _____, 2026.

<table>
<tr><td>OWNER:</td><td>BIDDER</td></tr>
<tr><td rowspan="8">Greenville Utilities Commission
401 South Greene Street
Greenville, North Carolina 27834
P.O. Box 1847
Greenville, North Carolina 27835

Mr. Cleve Haddock, Lifetime CLGPO
Procurement Manager
Office: 252-551-1533
Cell: 252-361-3655</td><td></td></tr>
<tr><td>NAME TITLE</td></tr>
<tr><td>STREET ADDRESS</td></tr>
<tr><td>CITY/STATE/ZIP</td></tr>
<tr><td>PHONE:</td></tr>
<tr><td>FAX:</td></tr>
<tr><td>EMAIL:</td></tr>
<tr><td>SIGNATURE</td></tr>
<tr><td>MANUFACTURER OF PROPOSED EQUIPMENT</td><td rowspan="4"></td></tr>
<tr><td></td></tr>
<tr><td>MANUFACTURER</td></tr>
<tr><td>STREET ADDRESS</td></tr>
<tr><td>CITY/STATE/ZIP</td><td></td></tr>
</table>

TERMS AND CONDITIONS

1. The undersigned, hereafter called the Contractor, hereby declares that the only person or persons interested in this Proposal as principal or principals is or are named herein and that no other person than herein mentioned has any interest in this Proposal or in the Contract to be entered into; that this Proposal is made without connection with any other person, company or parties making a bid or Proposal; and that it is in all respects fair and in good faith without collusion or fraud.

2. The Contractor further declares that he has examined the site of the work and informed himself fully in regard to all conditions pertaining to the locations where the work is to be done; that he has examined the Technical Specifications for the work and Contract Documents relative there to, and has read all special provisions furnished prior to the opening of bids; that he has satisfied himself relative to the work to be performed.

3. The Contractor proposes and agrees, if this Proposal is accepted, to contract with the Owner in the form of Contract specified, to furnish all necessary labor, equipment, and materials, except materials and equipment specified to be furnished by the Owner, required for the installation of the station, complete in accordance with the Plans, Specifications and Contract Documents, to the full and entire satisfaction of the Owner with a definite understanding that no money will be allowed for extra work except as set forth in the General Conditions and Contract Documents, as filed on Change Order forms. No changes in work shall begin without prior written approval by the Owner or its representative Engineer. Change order pricing shall be based on the unit prices provided in this bid.

4. The Bid Schedule is subject to the following terms and conditions which, by reference, are made a part of this Proposal.

5. The prices of materials set forth herein do not include any sums which are or may be payable by the Contractor on account of North Carolina Sales Tax upon the sale, purchase, or use of the materials hereunder, the amount thereof shall be added to the purchase price and paid by the Owner after the Contractor has ascertained the actual sales tax to be included in the Contract price.

6. The prices quoted in the Proposal shall be firm unless otherwise clearly noted in the Proposal.

7. The price quoted includes delivery FOB substation site of any equipment and materials and complete installation at substation site. The prices of the equipment and installation set forth herein shall include the cost of delivery at the Contractor's risk to the site.

8. The Contractor shall provide the Owner quoted prices on a per-hour basis, for various personnel and equipment, assuming a normal work week as being forty (40) hours.

9. The Contractor shall state his normal work week for the project:

_____ Five (5), eight (8) hour days (Monday through Friday)

_____ Four (4), ten (10) hour days (Monday through Thursday)

_____Other, _____

10. Work on weekends or generally accepted holidays will only be allowed if specific outage arrangements are required, or if the Contractor falls behind in meeting the project's scheduled completion date. If the Contractor deems this necessary, he must receive the Owner's written approval five (5) business days prior to beginning the revised work scheme.

11. The time of completion for this project is of the essence.

12. The Contractor shall submit a proposed project construction schedule with the Proposal for review and approval by the Owner and Engineer. The targeted date for completion is December 15, 2028. If this date is not possible, please present an alternate date.

13. The time for delivery and installation shall be extended for the period of any reasonable delay due exclusively to causes beyond the control and without fault of the Contractor, including acts of God, fires, floods, strikes, and delay in transportation.

14. The Contractor will not be paid for inclement weather days or for travel time to and from the job site, unless expressly requested by the Contractor as a written stipulation to his original Proposal.

15. The Contractor-furnished materials shall conform to the "Technical Specifications" attached hereto and made a part hereof.

16. Title to the materials furnished by the Contractor shall pass to the Owner upon completion of the installation at the point above specified.

17. This Proposal is made pursuant to the provisions of the Notice and Instructions to Bidders, the Specifications, and the Contractor agrees to the terms and conditions thereof.

18. The Contractor warrants the accuracy of all statements contained in the Bidders Qualifications, if any shall be submitted, and agrees that the Owner shall rely upon such accuracy as a condition of the Contract if this Proposal is accepted.

19. The Contractor warrants that the Contractor-furnished Materials will conform to the performance data and guarantees attached which, by this reference, are made a part of this Proposal. Any exceptions or deviations from the Plans and Specifications must be clearly stated in the Proposal to warrant consideration.

20. The Contractor assumes liability for the proper care, handling, storage, and security of all materials furnished to the Contractor by the Owner for the project.

21. The undersigned further agrees that in case of failure on his part to execute said Contract within ten (10) consecutive calendar days after written notice has been given of the Award of the Contract, bid security accompanying this bid, and the monies payable thereon, shall be paid into the funds of the Owner's account set aside for this project, as liquidated damages for such failure, otherwise, the check, cash, or Bid Bond accompanying the Proposal shall be returned to the undersigned.

22. The Contractor shall maintain during the project and shall provide the Owner/Engineer one (1) complete set of "as-constructed" drawings upon the completion of the project.

23. The Contractor warrants that it possesses Electric Utility Contractor's License for the State of North Carolina. A copy of the license shall be included in this *Form of Proposal.*

24. The Contractor shall submit, in the *Form of Proposal*, the proposed project management staff, i.e., project manager, site superintendent, general foreman, etc. The qualifications / work experience level of the Bidder's proposed work force shall be included as well. The Contractor shall provide evidence of a minimum of 60% of the proposed work force having five (5) years or more tenure with the Bidder's firm. If other personnel are assigned to the project, similar information will be required prior to construction assignment.

25. The Contractor shall provide a list of recent projects of similar voltage class and complexity, along with the Owner and contact information of the representative who was reported to directly.

26. If the proposed staff along with their qualifications is not provided, the bid may be subject to non-compliance, thus, making it unacceptable.

27. The Contractor shall provide a list of subcontractors (if any) in the proposal and their respective support services which will be used by the Contractor when undertaking this project. All subcontractors will be subject to review and approval by the Owner.

28. **A mandatory pre-construction meeting will be scheduled at a later time based on the construction schedule.**

29. Uniform Guidance: Contracts funded with federal grant or loan funds must be procured in a manner that conforms with all applicable federal laws, policies, and standards, including those under the Uniform Guidance (2 C.F.R. Part 200).

INSERT

ADDENDA / CLARIFICATIONS / BULLETINS

Section I General Instructions, 6. Bulletins and Addenda

PROPOSAL PAGES

DISTRIBUTION CONSTRUCTION ASSEMBLY UNITS

Definitions:

POLE UNITS

A pole unit consists of one pole in place. It does not include pole-top construction assembly unit or other parts attached to the pole. The first two digits of the unit number column indicate the length of the pole; the following digits specify the RUS Class.

Pole Plan Under Which the Poles are to be Furnished: (Check one)

1. *Insured Warranted* ☐ 2. *Independently Inspected* ☒
3. *Quality Assured* ☐
4. *Either Insured Warranted, Independently Inspected, or quality Assured* ☐

POLE TOP CONSTUCTION ASSEMBLY UNITS

A pole top construction assembly unit generally consists of the insulator(s), crossarm(s), braces, and hardware, except tie wire, required to support the power conductors and overhead ground wire, as indicated on the applicable drawing. It does not include the pole, the downlead, and butt coil, which are separate units.

GUY CONSTRUCTION ASSEMBLY UNITS (DG UNITS)

A guy construction assembly unit consists of the hardware and wire. Guy guards are designated separately.

ANCHOR CONSTRUCTION ASSEMBLY UNITS

An anchor construction assembly unit consists of the anchor with rod or rods, complete, ready for attaching the guy wire.

DISTRIBUTION CONSTRUCTION ASSEMBLY UNITS

Part 1A - Pole Units - Direct Embedded			Labor	
Unit NO.	**Embedded Depth (FT)**	**NO. of Units**	**Unit Labor $**	**Extended Labor $**
35 Foot Class 5 Pole	5.5	22		
40 Foot Class 4 Pole	6	7		
45 Foot Class 4 Pole	6.5	9		
50 Foot Class 3 Pole	7	8		
55 Foot Class 3 Pole	7.5	50		
60 Foot Class 2 Pole	8	20		
65 Foot Class 2 Pole	8.5	12		
65 Foot Steel Pole	8.5	3		
Install Pole Tag		133		
Pole/Guy Bollards		110		

Part 1B - Pole Framing Units		Labor	
Drawing NO.	**NO. of Units**	**Unit Labor $**	**Extended Labor $**
Single Phase Single Dead End (Tap), Suspension (A5)	12		
Two Phase Single Deadend (Tap), Suspension (B5)	3		
Three Phase Tangent, MIF Construction Single Pin (C1)	35		
Three Phase Tangent, MIF Vertical Single Pin, Pole Top (C1.V)	1		
Three Phase, Tangent, MIF Vertical Single Pin (C1.V1)	4		
Three Phase, Tangent, MIF Z Construction Single Pin (C1.Z)	4		
Three Phase Small Angle, MIF Construction Double Pin (C2)	21		
Three Phase Large Angle, Suspension Insulator (C3)	1		
Three Phase Large Angle, Double Deadend Suspension (C4)	2		
Three Phase Single Deadend, Crossarm Suspension (C5)	19		
Three Phase Single Deadend (Tap), Vertical Suspension (C5.V)	3		
Three Phase Tangent Double Deadend, Cross Suspension (C6)	15		
Three Phase Tangent, Double Deadend Suspension (C6.V)	1		
XRM-10A	92		
XRM-10DDE	27		

Part 1C - Guy Construction Units		Labor	
Drawing NO.	**NO. of Units**	**Unit Labor $**	**Extended Labor $**
DG-12_14	208		
SWG-12_14	14		
TG_SG	38		

Part 1D - Anchor Construction Units		Labor	
Drawing NO.	**NO. of Units**	**Unit Labor $**	**Extended Labor $**
DA	110		
TA-2	20		

Part 1E - OH Conductor Units		Labor	
Unit NO.	**NO. of Units (FT)**	**Unit Labor $**	**Extended Labor $**
#6 Aluminum Triplex (Poly)	9789		
#2 Aluminum Triplex (Clam)	575		
1/0 Aluminum Triplex (Murex)	820		
2/0 Aluminum Triplex (Rucina)	395		
4/0 Aluminum Triplex (Zuzara)	656		
1/0 Aluminum Quadraplex (Criollo)	104		
1/0 Aluminum Clad Steel Reinforced (Raven) (Per Phase)	20532		
336MCM Aluminum Clad Steel Reinforced (Merlin) (Per Phase)	60302		
795MCM Stranded Aluminum (Arbutus) (Per Phase)	25863		

DISTRIBUTION CONSTRUCTION ASSEMBLY UNITS CONTINUED

Part 1F - OH Transformer Units		Labor	
Unit NO.	**NO. of Units**	**Unit Labor $**	**Extended Labor $**
Single Phase Transformer, 10 kVA CSP (120/240)	12		
Single Phase Transformer, 15 kVA CSP (120/240)	10		
Single Phase Transformer, 25 kVA CSP (120/240)	10		
Single Phase Transformer, 50 kVA CSP (120/240)	4		
Single Phase Transformer, 75 kVA CSP (120/240)	2		
Single Phase Transformer, 100 kVA CSP (120/240)	1		
Three Phase Transformer Bank, (3) 25 kVA Conventional (120/240)	1		
Three Phase Transformer Bank, (3) 50 kVA Conventional (120/240)	1		
Three Phase Transformer Bank, (3) 75 kVA Conventional (120/240)	2		

Part 1G - Protection & Sectionalizing Units		Labor	
Unit NO.	**NO. of Units**	**Unit Labor $**	**Extended Labor $**
Surge Arrestor - Three Phase	7		
Fused Cutout - Single Phase	16		
Fused Cutout - Two Phase	3		
Fused Cutout - Three Phase	26		
600A Line Drop Switches - Three Phase	1		
600A Inline Switches - Three Phase	4		
900A Horizontal Gang Switch- Three Phase	3		
600A Over/Under Tie Gang Switch-Three Phase	1		
600A Vertical Gang Switch-Three Phase	2		

Part 1H - Riser Pole (OH to UG) Units		Labor	
Unit NO.	**NO. of Units**	**Unit Labor $**	**Extended Labor $**
Single Phase 200A w/ Fused Cutout	15		
Two Phase 200A w/ Fused Cutout	3		
Three Phase 200A w/ Fused Cutout	24		
Three Phase 600A w/ Line Drops	1		

Part 1I - Voltage Alteration Units		Labor	
Unit NO.	**NO. of Units**	**Unit Labor $**	**Extended Labor $**
Capacitor Bank (Three Phase)	3		

Part 1J - OH Secondary Service Units		Labor	
Unit NO.	**NO. of Units**	**Unit Labor $**	**Extended Labor $**
Connect Service On Pole	178		
Service Assembly - Secondary Riser Up Pole	31		
Light Fixture Installation	102		

Part 2A - Excavation Units		Labor	
Unit NO.	**NO. of Units (FT)**	**Unit Labor $**	**Extended Labor $**
Machine Trench (minimum 24" cover)	291		
Machine Trench (minimum 40" cover)	43		
Reseed Trench	668		

DISTRIBUTION CONSTRUCTION ASSEMBLY UNITS CONTINUED

Part 2B - Boring Units		Labor	
Unit NO.	NO. of Units (FT)	Unit Labor $	Extended Labor $
2" Directional Boring (1 conduit)	5327		
2" Directional Boring (2 conduits)	518		
3" Directional Boring (1 conduit)	2657		
4" Directional Boring (1 conduit)	5255		
4" Directional Boring (2 conduits)	621		
4" Directional Boring (3 conduits)	1612		

Part 2C - Conduit Installation Units		Labor	
Unit NO.	NO. of Units (FT)	Unit Labor $	Extended Labor $
2" Conduit	6406		
3" Conduit	2790		
4" Conduit	10890		
6" Conduit	30		
2" PVC 90* Elbow	53		
2" Galvanized 90* Elbow	34		
3" PVC 90* Elbow	38		
4" PVC 90* Elbow	11		
4" PVC 45* Elbow	8		
4" Galvanized 90* Elbow	50		
5" PVC 90* Elbow	2		
6" PVC 90* Elbow	3		

Part 2D - UG Primary in Conduit Installation Units		Labor	
Unit NO.	NO. of Units (FT)	Unit Labor $	Extended Labor $
1/0 AWG Aluminum(1 Phase)	21607		
750 MCM Aluminum (1 Phase)	3060		

Part 2E - UG Secondary in Conduit Installation Units		Labor	
Unit NO.	NO. of Units (FT)	Unit Labor $	Extended Labor $
#6 Aluminum Triplex	2270		
2/0 Aluminum Triplex	1032		
4/0 Aluminum Triplex	1277		
350 Aluminum Triplex	1056		
4/0 Aluminum Quadraplex	278		
350 Aluminum Quadraplex	511		

Part 2F - Padmounted Transformers & Equipment		Labor	
Unit NO.	**NO. of Units**	**Unit Labor $**	**Extended Labor $**
Single Phase Transformer Pad	3		
Single Phase Ground Assembly (Pad Mount Equipment)	3		
Thress Phase Ground Assembly (Pad Mount Equipment)	6		
Three Phase Transformer Pad (75kVA - 300kVA)	6		
25 kVA Single Phase Padmount Transformer	1		
50 kVA Single Phase Padmount Transformer	1		
75 kVA Single Phase Padmount Transformer	1		
150 kVA Three Phase Padmount Transformer	4		
300 kVA Three Phase Padmount Transformer	2		
Single Phase Sectionalizing Cabinet	4		
Two Phase Sectionalizing Cabinet	2		
Three Phase Sectionalizing Cabinet	7		
200A Load Break Elbow	152		
10 kV Elbow Arrestor	2		
200A Terminator	96		
600A Terminator	3		
8x8 Manhole	2		

Part 2G - Secondary Pedestal/Service		Labor	
Unit NO.	**NO. of Units**	**Unit Labor $**	**Extended Labor $**
9x14 Pedestal	21		
9x14 Pedestal Flat Lid	21		
18x24 Pedestal	27		
18x24 Pedestal Flat Lid	27		
4 Point Secondary Buss Kit	140		
Connect Service in Pedestal or Transformer	88		
Connect Service in Meter Base	16		

Part 2H - Streetlight Poles		Labor	
Unit NO.	**NO. of Units**	**Unit Labor $**	**Extended Labor $**
24' Black Aluminum Streetlight Pole	7		
35' Concrete Streetlight Pole	8		

Part 3A - Fiber Units		Labor	
Unit NO.	**NO. of Units**	**Unit Labor $**	**Extended Labor $**
96 Count ADSS Fiber	6723		
192 Count ADSS Fiber	661		
150' Storage Loop	6		
96 Count ADSS Tangent	13		
96 Count ADSS Deadend	50		
192 Count ADSS Tangent	1		
192 Count ADSS Deadend	2		

TRANSMISSION CONSTRUCTION ASSEMBLY UNITS

Part 4A - Transmission Structure Units					Labor	
Structure NO.	Unit NO.	Weight (LBS)	Embedment Depth (FT)	NO. of Units	Unit Labor $	Extended Labor $
44	75', SW-V18	6245		1		
	Virbratory Tapered Caisson	5582	26	1		
45	80', SW-V17	6704		1		
	Virbratory Tapered Caisson	5357	26	1		
46	80', SW-H6	4077		1		
	Virbratory Tapered Caisson	3683	19	1		
46A	85', SW-H6	4308		1		
	Virbratory Tapered Caisson	3728	19.5	1		
47	80', SW-V17	6794		1		
	Virbratory Tapered Caisson	5226	19	1		
48	90', Custom Engr DE	19960		1		
	Virbratory Caisson, Flanged Base Plate	19062	30	1		
49	95', Custom Engr DE	21420		1		
	Virbratory Caisson, Flanged Base Plate	21270	36	1		
50	95', SW-V17	8843		1		
	Virbratory Tapered Caisson	5219	21	1		
51	90', SW-H8	5043		1		
	Virbratory Tapered Caisson	5542	24	1		
52	90', SW-V17	7947		1		
	Virbratory Tapered Caisson	5511	24	1		
54	90', SW-V17	7917		1		
	Virbratory Tapered Caisson	4791	18	1		
55	90', SW-V18	8112		1		
	Virbratory Tapered Caisson	5400	19.5	1		
56	95', SW-V17	8753		1		
	Virbratory Tapered Caisson	4736	25	1		
57	95', SW-H6	4999		1		
	Virbratory Tapered Caisson	5373	22.5	1		
58	90', SW-H6	5161		1		
	Virbratory Tapered Caisson	4100	22.5	1		
59	80', SW-V17	6824		1		
	Virbratory Tapered Caisson	5065	24.5	1		
Str 1	90', Custom Greenville Blvd	13557		1		
	Virbratory Caisson, Flanged Base Plate	18091	33	1		
Str 1A	75', Greenville Blvd SW-V20	8725		1		
	Virbratory Tapered Caisson	6593	28.5	1		

Part 4B - Transmission Conductors Units		Labor	
Unit NO.	NO. of Units (FT)	Unit Labor $	Extended Labor $
1272 AAC (Narcissus)	19500		
7#9 Alumoweld	6250		

Part 4C - Remobilization		Labor	
Unit NO.	NO. of Units (FT)	Unit Labor $	Extended Labor $
Remobilization	1		

PROPOSAL SUMMARY

In the space below, please provide a price for the following Construction Assembly Units per the attached specifications.

QUOTATIONS SHOULD BE RECEIVED BY 2:00 pm ON December 1, 2026. Quotations can be mailed or delivered to Cleve Haddock, Lifetime CLGPO, Procurement Manager, 401 South Greene Street, Greenville, N.C. 27834.Greenville Utilities Commission reserves the right to reject any and all bids that are not in GUC's best interest.

DISTRIBUTION CONSTRUCTION ASSEMBLY UNITS

Distribution Removal ..... $_____

Wood Pole Install..... $_____

Tubular Steel Pole Install ..... $_____

Distribution Pole Top Assembly..... $_____

Distribution UG Primary Install…….....$_____

Guy Assembly..... $_____

Anchor Assembly..... $_____

Conductor Assembly..... $_____

OH/UG Service Units.....$_____

TRANSMISSION CONSTRUCTION ASSEMBLY UNITS

Transmission Removal .....$_____

Transmission Steel Pole Install.....$_____

Vibratory Caisson Install…….....$_____

Transmission Conductor Assembly .....$_____

Structure 1A Installation Greenville Blvd
Substation Radial Conversion……$_____

Remobilization Costs…….....$_____

TOTAL CONSTRUCTION ASSEMBLY UNITS $_____

Note: Will be awarded as a total bid.

Complete and Check All Math: It is the responsibility of the Bidder to extend unit prices and supply a total for all item(s)

It is certified that this bid is made in good faith and without collusion or connection with any other person bidding on the same above listed items. It is also certified that this bid is made in good faith and without collusion or connection with any GUC employee(s).

Certified check or cash for $_____or bid bond for $_____attached.

Firm Name:_____ Phone: (_____)_____

Address:_____

City _____ State _____ Zip Code _____

Fax (____)_____ E-mail _____

Authorized Official _____ Title _____
Typed Name

_____ Date _____
Signature

2 Copies of your bid should be received no later than December 1, 2026 at 2:00 pm (EST).

NO BIDS CONSIDERED UNLESS SUBMITTED ON THIS FORM(S)

INSERT

PROPOSED CONSTRUCTION SCHEDULE

General Instructions, 19. Completion
Terms and Conditions – Item 12

INSERT

CERTIFICATE(S) OF INSURANCE

General Instructions, 24. Contractor's Insurance

INSERT

CONTRACTOR'S LICENSE

General Instructions, 25. Contractor's License
Terms and Conditions – Item 23

FORM OF EXCEPTIONS
General Instructions, 9. Form of Exceptions,
General Instructions, 11. Evaluation and Award of Bids

BIDDER: _____

OWNER: GREENVILLE UTILITIES COMMISSION, NORTH CAROLINA

PROJECT DESCRIPTION: RELOCATION OF 12.47 kV DISTRIBUTION STRUCTURES AND 115 kV TRANSMISSION STRUCTURES ALONG EVANS RD FROM E. FIRE TOWER RD TO GREENVILLE BLVD

INSTRUCTIONS: The following is a list of exceptions to the Bidding Documents and/or Technical Specifications pertaining to the furnishing of the subject materials. Bidders shall identify each exception by Specification page and paragraph number on this form. The omission of exception implies complete compliance with Plans and Specifications.

BID DOCUMENT/ SPECIFICATION PAGE NO. AND PARAGRAPH	**EXCEPTION/VARIATION**

EQUAL EMPLOYMENT OPPORTUNITY AFFIDAVIT

General Conditions, 24. Equal Employment Opportunity

The Contractor shall include the provisions of the Equal Employment Opportunity, as found in General Conditions section, in every Subcontract unless exempted by rules, regulations, or orders of the Owner so that such provisions will be binding upon each Subcontractor.

Bidder: _____

By: _____

Date: _____

PROPOSED PROJECT MANAGEMENT STAFF

Terms and Conditions – Item 24

Title/Function	**Name**	**Years with Firm**	**Total Years Experience**
Project Manager			
Site Superintendent			
General Foreman - Foundations			

CONTRACTOR HAS ☐ DOES NOT HAVE ☐ SIXTY PERCENT (60%) OF PROPOSED WORK FORCE WITH FIVE (5) YEARS CONTINUOUS SERVICE WITH BIDDER'S FIRM

REFERENCES

Terms and Conditions – Item 25

CONTACT INFORMATION FOR RECENT SIMILAR PROJECTS

Owner Name	**Project Description**	**Contact Name and Phone Number**

LIST OF SUBCONTRACTORS

Terms and Conditions – Item 27

SUBCONTRACTOR	**PROPOSED WORK TO BE PERFORMED**

Letter of Compliance to E-Verify for Greenville Utilities Commission

1. I have submitted a bid for contract or desire to enter into a contract with the Greenville Utilities Commission;

2. As part of my duties and responsibilities pursuant to said bid and/or contract, I affirm that I am aware of and in compliance with the requirements of E-Verify, Article 2 of Chapter 64 of the North Carolina General Statutes, to include (mark which applies):

   a. ____ After hiring an employee to work in the United States I verify the work authorization of said employee through E-Verify and retain the record of the verification of work authorization while the employee is employed and for one year thereafter; or

   b. ___I employ less than twenty-five (25) employees in the State of North Carolina.

3. As part of my duties and responsibilities pursuant to said bid and/or contract, I affirm that to the best of my knowledge and subcontractors employed as a part of this bid and/or contract, are in compliance with the requirements of E-Verify, Article 2 of Chapter 64 of the North Carolina General Statutes, to include (mark which applies):

   a. ____ After hiring an employee to work in the United States the subcontractor verifies the work authorization of said employee through E-Verify and retains the record of the verification of work authorization while the employee is employed and for one year thereafter; or

   b. ___Employ less than twenty-five (25) employees in the State of North Carolina.

Specify subcontractor:_____

_____(Company Name)

By: _____(Typed Name)

_____(Authorized Signatory)

_____(Title)

_____(Date)

LETTER OF COMPLIANCE TO THE
IRAN DIVESTMENT ACT CERTIFICATION

Name of Vendor or Bidder: _____

_____

IRAN DIVESTMENT ACT CERTIFICATION
REQUIRED BY N.C.G.S. 143C-6A-5(a)

As of the date listed below, the vendor or bidder listed above is not listed on the Final Divestment List created by the State Treasurer pursuant to N.C.G.S. 143-6A-4.

The undersigned hereby certifies that he or she is authorized by the vendor or bidder listed above to make the foregoing statement.

_____

Signature Date

_____

Printed Name Title

BID BOND

KNOW ALL MEN BY THESE PRESENT, THAT WE _____

_____

as Principal, and _____

as Surety, who is duly licensed to act as Surety in North Carolina, are held and firmly bound unto the Greenville Utilities Commission, Greenville, NC, as Obligee, in the penal sum of _____ _____ DOLLARS ($_____) (5% Bid Bond), lawful money of the United States of America, for the payment of which, well and truly to be made, we bind ourselves, our heirs, administrators, successors and assigns, jointly and severally, firmly by these present.

SIGNED, Sealed and dated this _____day of _____, 2026.

WHEREAS, the said Principal is herewith submitting a Proposal for

RELOCATION OF 12.47 KV DISTRIBUTION STRUCTURES AND 115 KV TRANSMISSION STRUCTURES ALONG EVANS RD FROM E. FIRE TOWER RD TO GREENVILLE BLVD

and the Principal desires to file this Bid Bond in Lieu of making the cash deposit as required by the bidding documents contained herein;

NOW, THEREFORE, THE CONDITION OF THE ABOVE OBLIGATION is such that if the principal shall be awarded the Purchase Order for which the bid is submitted and shall accept the Purchase Order within ten (10) days after the award of same to the principal, then this obligation shall be null and void; but if the principal fails to so accept such purchase order as required by the bidding documents contained herein, the Surety shall, upon demand, forthwith pay to the Obligee the amount set forth in the first paragraph hereof, and upon failure to forthwith make such payment, the Surety shall pay the Obligee an amount equal to double the amount of this Bid Bond as set forth in the first paragraph hereof. Power of Attorney from the surety to is Attorney-in-Fact is attached hereto.

_____

Principal

By _____(SEAL)

_____

Corporate Surety

By _____(SEAL)

PERFORMANCE BOND/PAYMENT BOND

Date of Execution: _____

Name of Principal: _____

(Contractor) _____

Name of Surety: _____

Name of Contracting Body: _____

Amount of Bond: _____

Project: _____

KNOW ALL THESE MEN BY THESE PRESENT, That We, the Principal and Surety above named, are held and firmly bound unto the above named Contracting Body, hereinafter called the Contracting Body, in the penal sum of the amount stated above the payment of which sum well and truly to be made, we bind ourselves, our heirs, executors, administrators, and successors, jointly and severally, firmly by these present.

THE CONDITION OF THIS OBLIGATION IS SUCH that whereas the Principal entered into a certain Contract with the Contracting Body, identified as shown above and hereto attached.

NOW, THEREFORE, if the Principal shall well and truly perform and fulfill all the undertakings, covenants, terms, conditions, and agreements of said Contract during the original term of said Contract and any extensions there of that may be granted by the Contracting Body, with or without notice to the Surety, and during the life of any guaranty required under the Contract, and shall also well and truly perform and fulfill all the undertakings, covenants, terms, conditions, and agreements of any and all duly authorized modifications of said Contract that may hereafter be made, notice of which modifications to the Surety being hereby waived, then, this obligation to be void; otherwise to remain in full force and virtue.

IN WITNESS WHEREOF, the above bounded parties have executed this instrument under the several seals on the date indicated above, the name and corporate seal of each corporate party being hereto affixed, and these present duly signed by its undersigned representative, pursuant to authority of its governing body.

Executed in five (5) counterparts.

Witness:	CONTRACTOR:
_____	_____
(Proprietorship or Partnership)	(Trade or Corporate Name)
ATTEST:	
By: _____	By: _____
Title: _____	Title: _____
(Corporate Secretary or Assistant Secretary Only)	
	(CORPORATE SEAL)
Witness:	SURETY COMPANY:
_____	_____
Countersigned:	By: _____
_____	Title: _____
	(Attorney-in-Fact)
_____	
N.C. Licensed Resident Agent	
_____	
_____	
(Name and Address – Surety Agent)	(SURETY SEAL)
_____	
_____	
Surety Company Name and N.C. Regional or Branch Office Address	

SPACE FOR ATTACHING POWER OF ATTORNEY
(Performance Bond)

SECTION II

TERMS AND CONDITIONS FOR THE PURCHASE OF APPARATUS, SUPPLIES, MATERIALS, LABOR AND EQUIPMENT

These Terms and Conditions, made and entered into on this the __ day of _____, by and between GREENVILLE UTILITIES COMMISSION OF THE CITY OF GREENVILLE, PITT COUNTY, NORTH CAROLINA, with one of its principal offices and places of business at 401 S. Greene Street, Post Office Box 1847, Greenville, Pitt County, North Carolina 27835-1847, hereinafter referred to as "GUC" and _____, a _____ organized and existing under and by virtue of the laws of the State of _____, with one of its principal offices and places of business at _____, hereinafter referred to as "PROVIDER";

1.0 TAXES

No taxes shall be included in any bid prices. GUC is exempt from Federal Excise Tax. GUC is not exempt from North Carolina state sales and use tax or, if applicable, Pitt County sales and use tax. Such taxes shall be shown as a separate item on the invoice.

2.0 INVOICES

It is understood and agreed that orders will be shipped at the established contract prices and quantities in effect on dates orders are placed. Invoicing at variance with this provision may subject the contract to cancellation. Applicable North Carolina sales tax shall be invoiced as a separate line item. All invoices must bear the GUC purchase order number. Mail all invoices to Greenville Utilities Commission, Finance Department, P. O. Box 1847, Greenville, NC 27835-1847.

3.0 PAYMENT TERMS

Payments for equipment, materials, or supplies will be made after the receipt and acceptance of the equipment, materials, supplies or services and after submission of a proper invoice. GUC's normal payment policy is thirty (30) days. GUC will not be responsible for any goods delivered without a purchase order having been issued. Payment will be made in U. S. currency only.

4.0 QUANTITIES

Quantities specified are only estimates of GUC's requirements. GUC reserves the right to purchase more or less than the stated quantities at prices indicated in the submitted Proposal Form based on our actual needs.

5.0 AFFIRMATIVE ACTION

The Provider will take affirmative action in complying with all Federal and State requirements concerning fair employment and employment of the handicapped, and concerning the treatment of all employees, without discrimination by reason of race, color, religion, sex, national origin, or physical handicap.

6.0 CONDITION AND PACKAGING

Unless otherwise indicated in the bid, it is understood and agreed that any item offered or shipped shall be new and in first class condition, that all containers shall be new and suitable for storage or shipment, and that prices include standard commercial packaging.

7.0 SAMPLES

Samples of items, if required, must be furnished free of expense to GUC, and if not destroyed, will, upon request, be returned at the Provider's expense. Request for the return of samples must be made at the bid opening, otherwise, the samples will become GUC's property. Each individual sample must be labeled with Provider's name.

8.0 SPECIFICATIONS

Any deviation from specifications must be clearly pointed out, otherwise, it will be considered that items offered are in strict compliance with specifications, and the Provider will be held responsible. Deviations must be explained in detail. **The Provider shall not construe this paragraph as inviting deviation or implying that any deviation will be acceptable.**

9.0 INFORMATION AND DESCRIPTIVE LITERATURE

Providers are to furnish all information requested. Further, as may be specified elsewhere, each Provider must submit with its proposal: cuts, sketches, descriptive literature, and/or complete specifications covering the products offered. Reference to literature submitted with a previous bid does not satisfy this provision. Bids which do not comply with these requirements will be subject to rejection.

10.0 AWARD OF CONTRACT

As directed by statute, qualified bids will be evaluated and acceptance made of the lowest responsible, responsive bid most advantageous to GUC as determined upon consideration of such factors as prices offered, the quality of the article(s) offered, the general reputation and

performance capabilities of the Provider, substantial conformity with the specifications and other conditions set forth in the bid, the suitability of the article(s) for the intended use, the related services needed, the date(s) of delivery and performance, and such other factors deemed by GUC to be pertinent or peculiar to the purchase in question.

Acceptance of the order includes acceptance of all terms, conditions, prices, delivery instructions, and specifications as shown on this set of Terms and Conditions and in this order or attached to and made a part of this order.

The conditions of this order cannot be modified except by written amendment in the form of "Amended Purchase Order," which has been approved by GUC's Procurement Manager.

In the event of a Provider's failure to deliver or perform as specified, GUC reserves the right to cancel the order or any part thereof, without prejudice to GUC's other rights. The Provider agrees that GUC may return part of or all of any shipment at Provider's expense. GUC may charge the Provider with all reasonable expenses resulting from such failure to deliver or perform.

11.0 MEDIATION/BINDING ARBITRATION

In the event of any dispute between the Parties, the Parties agree to submit any dispute to non-binding mediation before a mutually agreeable Mediator prior to initiating litigation. If the Parties are unable to agree upon a Mediator within thirty (30) days after demand therefore, either Party may petition a Court of competent jurisdiction for the designation of a qualified Mediator for these purposes. Each Party shall bear its own costs and expenses of participating in the mediation (including, without limitation, reasonable attorneys' fees), and each Party shall bear one-half (1/2) of the costs and expenses of the Mediator. Unless otherwise agreed, the Parties will hold the mediation in Greenville, North Carolina. The matters discussed or revealed in the mediation session shall not be disclosed in any subsequent litigation.

In the event the matter is not resolved in mediation, either Party may request arbitration. The parties shall jointly select an Arbitrator, and shall be bound by the decision of the Arbitrator with respect to any dispute between the parties with respect to this Agreement. If the parties are unable to mutually agree upon an Arbitrator, the Parties shall each select an Arbitrator, and the two Arbitrators so selected shall select a third Arbitrator, and the decision of the majority of the Arbitrators shall be conclusive and binding upon the Parties. The Parties at all times agree to equally split the costs of any Arbitrator(s) selected in an effort to resolve the dispute between the Parties. Any party desiring to resolve a dispute under the terms of this Agreement shall notify the other Party in writing, and the Parties shall seek to agree upon a mutually agreed-upon Arbitrator within a period of ten (10) days from the date of such written demand. If the Parties are unable to

agree within such ten (10) day period, the Parties shall each select an Arbitrator, and the two (2) Arbitrators so selected shall select a third Arbitrator within fifteen (15) days from the date of the written demand for arbitration, and a decision shall be rendered by the Arbitrator(s) so selected within five (5) days after such Arbitrator(s) is selected.

12.0 GOVERNMENT RESTRICTIONS

In the event any Governmental restrictions may be imposed which would necessitate alteration of the material, quality, workmanship, or performance of the items offered on this bid prior to their delivery, it shall be the responsibility of the successful Provider to notify the GUC Procurement Manager, at once, indicating in its letter the specific regulation which required such alterations. GUC reserves the right to accept any such alterations, including any price adjustments occasioned thereby, or, in the sole discretion of GUC, to cancel the contract.

13.0 INSURANCE

13.1 Coverage – During the term of the contract, the Provider at its sole cost and expense shall provide commercial insurance of such type and with the following coverage and limits:

13.1.1 Workers' Compensation – The Provider shall provide and maintain Workers' Compensation Insurance, as required by the laws of North Carolina, as well as employer's liability coverage with minimum limits of $1,000,000 each accident, covering all Provider's employees who are engaged in any work under the contract. If any work is sublet, the Provider shall require the subcontractor to provide the same coverage for any of its employees engaged in any work under the contract.

13.1.2 General Liability – Commercial Liability Coverage written on an "occurrence" basis in the minimum amount of $1,000,000 per occurrence.

13.1.3 Automobile – Automobile Liability Insurance, to include coverage for all owned, hired, and non-owned vehicles used in connection with the contract with a minimum combined single limit of $1,000,000 per accident.

13.1.4 Cyber –The Vendor shall maintain Cyber Liability Insurance with limits of $3,000,000 per occurrence, providing protection against liability for: (1) privacy breaches (including liability arising from the loss or disclosure of confidential information no matter how it occurs); (2) system breach; (3)

denial or loss of service; (4) introduction, implantation, or spread of malicious software code; and (5) unauthorized access to or use of computer systems. Cyber Liability Insurance shall not include any exclusion or restriction for unencrypted portable devices or other media. Vendor shall provide evidence of continuation or renewal for a period of two (2) years following termination of the Agreement.

13.2 Requirements - Providing and maintaining adequate insurance coverage is a material obligation of the Provider. All such insurance shall meet all laws of the State of North Carolina. Such insurance coverage shall be obtained from companies that are authorized to provide such coverage and that are authorized to do business in North Carolina by the Commissioner of Insurance. The Provider shall at all times comply with the terms of such insurance policies and all requirements of the insurer under any of such insurance policies, except as they may conflict with existing North Carolina laws or this contract. The limits of coverage under each insurance policy maintained by the Provider shall not be interpreted as limiting the Provider's liability and obligations under the contract. It is agreed that the coverage as stated shall not be canceled or changed until thirty (30) days after written notice of such termination or alteration has been sent by registered mail to GUC's Procurement Manager.

14.0 PATENTS AND COPYRIGHTS

The Provider shall hold and save GUC, its officers, agents, and employees, harmless from liability of any kind, including costs and expenses, including reasonable attorney fees, on account of any copyrighted articles or any patented or unpatented invention, device or appliance manufactured or used in the performance of this contract.

15.0 PATENT AND COPYRIGHT INDEMNITY

The Provider will defend or settle, at its own expense, any action brought against GUC to the extent that it is based on a claim that the product(s) provided pursuant to this agreement infringe any U.S. copyright or patent; and will pay those costs, damages, and attorney fees finally awarded against GUC in any such action attributable to any such claim, but such defense, settlements, and payments are conditioned on the following: (1) that Provider shall be notified promptly in writing by GUC of any such claim; (2) that Provider shall have sole control of the defense of any action on such claim and of all negotiations for its settlement or compromise; (3) that GUC shall cooperate with Provider in a reasonable way to facilitate the settlement of defense of such claim; (4) that such claim does not arise from GUC modifications not authorized by the Provider or from the use of combination of products provided by the Provider with products provided by GUC or by others; and (5) should such product(s) become, or in the

Provider's opinion likely to become, the subject of such claim of infringement, then GUC shall permit Provider, at Provider's option and expense, either to procure for GUC the right to continue using the product(s), or replace or modify the same so that it becomes non-infringing and performs in a substantially similar manner to the original product.

16.0 EXCEPTIONS

All proposals are subject to the terms and conditions outlined herein. All responses will be controlled by such terms and conditions and the submission of other terms and conditions, price catalogs, and other documents as part of a Provider's response will be waived and have no effect on this Request for Proposal or any other contract that may be awarded resulting from this solicitation. The submission of any other terms and conditions by a Provider may be grounds for rejection of the Provider's proposal. The Provider specifically agrees to the terms and conditions set forth in this set of Terms and Conditions by affixing its name on the signatory page contained herein.

17.0 CONFIDENTIAL INFORMATION

Except as provided by statute and rule of law, GUC will keep trade secrets which the Provider does not wish disclosed confidential. Each page shall be identified in boldface at the top and bottom as "CONFIDENTIAL" by the Provider. Cost information shall not be deemed confidential. The determination of whether a matter is confidential will be determined by North Carolina law.

18.0 ASSIGNMENT

No assignment of the Provider's obligations or the Provider's right to receive payment hereunder shall be permitted without the express written consent of GUC, provided however, upon written request approved by the GUC Procurement Manager, solely as a convenience to the Provider, GUC may:

- Forward the Provider's payment check directly to any person or entity designated by the Provider, and

- Include any person or entity designated by Provider as a joint payee on the Provider's payment check.

- In no event shall such approval and action obligate GUC to anyone other than the Provider, and the Provider shall remain responsible for fulfillment of all contract obligations.

19.0 ACCESS TO PERSON AND RECORDS

GUC shall have reasonable access to persons and records of Provider as a result of all contracts entered into by GUC.

20.0 INSPECTION AT BIDDER'S SITE

GUC reserves the right to inspect, at a reasonable time, the item, plant, or other facilities of a prospective Provider prior to contract award and during the contract term as necessary for GUC's determination that such item, plant, or other facilities conform with the specifications/requirements and are adequate and suitable for the proper and effective performance of the contract. Provider may limit GUC's access to restricted areas.

21.0 AVAILABILITY OF FUNDS

Any and all payments of compensation of this specific transaction and any continuation or any renewal or extension are dependent upon and subject to the allocation of GUC funds for the purpose set forth in this Agreement.

22.0 GOVERNING LAWS

All contracts, transactions, agreements, etc., are made under and shall be governed by and construed in accordance with the laws of the State of North Carolina.

23.0 ADMINISTRATIVE CODE

Bids, proposals, and awards are subject to applicable provisions of the North Carolina Administrative Code and General Statues and Laws of the State of North Carolina.

24.0 EXECUTION

In the discretion of GUC, failure of a duly authorized official of Provider to sign the Signatory Page may render the bid invalid.

25.0 CLARIFICATIONS/INTERPRETATIONS

Any and all questions regarding these Terms and Conditions must be addressed to the GUC Procurement Manager. Do not contact the user directly. **These Terms and Conditions are a**

complete statement of the parties' agreement and may only be modified in writing signed by Provider and the GUC Procurement Manager.

26.0 SITUS

The place of all contracts, transactions, agreements, their situs and forum, shall be North Carolina, where all matters, whether in contract or tort, relating to the validity, construction, interpretation, and enforcement shall be determined.

27.0 TERMINATION OF AGREEMENT

GUC or Provider may terminate this Agreement for just cause at any time. Provider will be paid for all time and expenses incurred as of the termination date. Termination for just cause by either party shall be by certified letter and shall be effective thirty (30) days after signed and acknowledged receipt of said letter. Just cause shall be based on reasonable grounds, and there must be a fair and honest cause or reason for such action. The causes for termination, include, but are not limited to: (1) Provider's persistent failure to perform in accordance with the Terms and Conditions, (2) Provider's disregard of laws and regulations related to this transaction, and/or (3) Provider's substantial violation of the provisions of the Terms and Conditions.

28.0 DELIVERY

Shipments will be made only upon releases from a purchase order issued by GUC in accordance with GUC's current needs.
Time is of the essence with respect to all deliveries under this Agreement.
Delivery of all equipment, materials, or supplies shall be made Free on Board (FOB) GUC Warehouse, 701 Utility Way, Greenville, North Carolina 27834, unless otherwise specified. The agreed price for such equipment, materials, or supplies shall include all costs of delivery and ownership, and risks of loss shall not be transferred from Provider to GUC until express written acceptance of delivery and inspection by GUC. Delivery hours are between 8:00 AM and 4:30 PM Monday-Friday only. **GUC's purchase order number is to be shown on the packing slip or any related documents.** GUC reserves the right to refuse or return any delivery with no purchase order number or which is damaged. GUC will not be charged a restocking fee for any delivery which is refused or returned.

29.0 INDEMNITY PROVISION

Provider agrees to indemnify and save GREENVILLE UTILITIES COMMISSION of the City of Greenville, Pitt County, North Carolina, and the City of Greenville, North Carolina, its co-

owners, joint venturers, agents, employees, and insurance carriers harmless from any and all losses, claims, actions, costs, expenses including reasonable attorney fees, judgments, subrogations, or other damages resulting from injury to any person (including injury resulting in death), or damage (including loss or destruction) to property of whatsoever nature of any person arising out of or incident to the performance of the terms of this Contract by Provider, including, but not limited to, Provider's employees, agents, subcontractors, and others designated by Provider to perform work or services in, about, or attendant to, the work and services under the terms of this Contract. Provider shall not be held responsible for any losses, expenses, claims, subrogations, actions, costs, judgments, or other damages, directly, solely, and proximately caused by the negligence of Greenville Utilities Commission of the City of Greenville, Pitt County, North Carolina. Insurance covering this indemnity agreement by the Provider in favor of Greenville Utilities Commission of the City of Greenville, Pitt County, North Carolina, and the City of Greenville, North Carolina, shall be provided by Provider.

30.0 FORCE MAJEURE

Neither party shall be considered in default in the performance of its obligations hereunder to the extent that the performance of any such obligation is prevented or delayed by any cause, existing or future, which is beyond the reasonable control of such party. In any such event of force majeure, the parties shall advise each other of such event, and the parties shall negotiate an equitable adjustment to their respective obligations under this Agreement.

31.0 WARRANTY(IES)

The Provider hereby includes all warranties, whether expressed or implied, including, but not limited to, the Implied Warranty of Merchantability and the Implied Warranty of Fitness for a Particular Purpose.

32.0 INTEGRATED CONTRACT

These Terms and Conditions, Instructions to Bidders, Specifications, and the selected Provider's bid represents the entire contract between the Parties. No verbal or other written agreement(s) shall be held to vary the provisions of this Agreement.

33.0 CONTRACT PROVISIONS

Each of the provisions of these Terms and Conditions shall apply to the full extent permitted by law, and the invalidity in whole or in part of any provision shall not affect the remainder of such provision or any other provisions.

34.0 E-VERIFY

E-Verify - I understand that E-Verify is the federal E-Verify program operated by the United States Department of Homeland Security and other federal agencies, or any successor or equivalent program used to verify the work authorization of newly hired employees pursuant to federal law in accordance with NCGS §64-25 et seq. I am aware of and in compliance with the requirements of E-Verify and Article 2 of Chapter 64 of the North Carolina General Statutes. To the best of my knowledge, any subcontractors employed by me as a part of this contract are in compliance with the requirements of E-Verify and Article 2 of Chapter 64 of the North Carolina General Statutes.

35.0 IRAN DIVESTMENT ACT CERTIFICATION

By acceptance of this purchase order, Vendor/Contractor certifies that, as of the date of the purchase order or contract, it is not on the Final Divestment List as created by the State Treasurer pursuant to N.C.G.S. § 143-6A-4. In compliance with the requirements of the Iran Divestment Act and N.C.G.S. § 143C-6A-5(b), Vendor/Contractor shall not utilize in the performance of the contract any subcontractor that is identified on the Final Divestment List.

36.0 UNIFORM GUIDANCE

Contracts funded with federal grant or loan funds must be procured in a manner that conforms with all applicable federal laws, policies, and standards, including those under the Uniform Guidance (2 C.F.R. Part 200).

37.0 SAFETY STATEMENTS

Safety Culture Commitment Statement:
At Greenville Utilities, we are committed to a culture of safety that prioritizes the well-being of our employees, contractors, and the communities we serve.
We believe that everyone deserves to work in a safe environment, and we are dedicated to fostering a culture where **safety is a core value, not just a priority**.
Here's what that means to us:

- **Employee and Contractor Safety:** We are committed to providing a safe work environment for all employees and contractors. We will invest in safety training, resources, and equipment to prevent accidents and injuries.

- **Open Communication:** We encourage open and honest communication about safety concerns. We believe everyone has a right and responsibility to speak up about unsafe work practices and potential hazards.

- **Continuous Improvement:** We are committed to continuous improvement in safety performance. We will learn from incidents and near misses, and we will actively seek ways to improve our safety processes and procedures.

- **Accountability:** We hold ourselves and our contractors accountable for safe work practices. This includes providing clear safety expectations, enforcing safety rules, and recognizing safe behavior.

- **Collaboration:** We believe in working collaboratively with employees, contractors, and regulatory agencies to achieve the highest level of safety.

Our commitment to safety extends beyond our employees. We work closely with our contractors to ensure they share our safety values. We expect them to implement robust safety programs, train their workers thoroughly, and adhere to all safety regulations.
We are confident that by working together, we can create a culture of safety where everyone goes home safe and healthy every day.
This commitment statement is a public declaration of our unwavering dedication to safety. We will continue to strive for zero incidents while promoting a positive safety culture that prioritizes the well-being of everyone involved in our utility operations.

Safety Management System Commitment Statement:
At Greenville Utilities, we are unwavering in our commitment to delivering safe and reliable utility service through a robust Safety Management System (SMS). This system forms the foundation of our safety culture, ensuring the well-being of our employees, contractors, and the communities we serve.

Our SMS commitment emphasizes:

- **Zero Incidents:** We believe all incidents are preventable. We strive for zero incidents by proactively managing risks and continuously improving our safety practices.

- **Empowered Workforce:** We foster a culture where safety is everyone's responsibility. This includes providing comprehensive safety training for both employees and contractors, empowering them to identify and report hazards.

- **Data-Driven Decisions:** We utilize data from inspections, incident investigations, and performance metrics to make informed decisions for risk mitigation and continuous improvement of our SMS.

- **Leadership Engagement:** Our leadership team actively demonstrates a commitment to safety by participating in safety reviews, audits, and promoting safety as a core value.
- **Contractor Collaboration:** We extend our safety commitment to our contractors. We require contractors working on our system to adhere to SMS principles, participate in safety briefings, and maintain strong safety programs within their own organizations.

- **Transparent Communication:** We believe in open communication about safety. We encourage employees and contractors to report concerns without fear of reprisal. We also maintain transparent communication with stakeholders about SMS performance.

This SMS commitment is a continuous journey, not a destination. We are dedicated to regularly reviewing and updating our system to reflect best practices and emerging technologies. Through continuous improvement and a commitment to a positive safety culture, we aim to remain an industry leader in safe and reliable utility service.

38.0 INFORMATION TECHNOLOGY

All Contracts are subject to Greenville Utilities Commission Information Technology Contract Provisions. These may be viewed at www.guc.com/doing-business-us.

39.0 NOTICES

Notices to the Parties should be sent to the names and addresses specified below:

Cleve Haddock, Lifetime CLGPO
Procurement Manager
Greenville Utilities Commission
P.O. Box 1847
Greenville, NC 27835-1847

Vendor Specified on Page 1 of Section III when awarded.

SECTION III

GREENVILLE UTILITIES COMMISSION

TECHNICAL SPECIFICATIONS—INSTALLATION SPECIFICATIONS

DECEMBER 1, 2026

1. SCOPE OF WORK

This specification defines the requirements for the installation, removal, transfer, and handling of electric utility infrastructure along Evans Rd from E. Fire Tower Rd to Greenville Blvd, including all labor, equipment, and materials necessary to complete the project.

1.1. Work Included

1.1.1. Construction of a new 12.47 kV distribution lines and 115 kV transmission lines adjacent to the existing line to accommodate NCDOT road widening.

1.1.2. Installation of approximately 150 distribution structures, 18 transmission structures, 135,000 feet of primary overhead conductor, 26,000 feet of primary underground conductor, and 110 bollards, as well as the removal of 150 distribution structures, 18 transmission structures, 120,000 feet of overhead primary and 27,000 of underground primary.

1.1.3. Transfer or replacement of all poles, equipment, primary and secondary conductors, and related hardware as depicted on the Detail Construction Drawings.

NOTE: Greenville Utilities Commission (GUC) will provide all materials necessary for the project. Contractor proposals shall include all labor, equipment, and incidental items required to complete the work.

1.2. Estimated Conductor Quantities

Conductor Type	Approx. Length (Linear Feet Per Phase)	Conductor Size
Primary Overhead	20,000	1272 AAC
	26,000	795 AAC
	60,500	336 ACSR

	20,500	1/0 ACSR
	6,300	7#9 Alumoweld
Primary Underground	3,100	750 AL
	22,000	1/0 AWG Aluminum

1.3. Work Sequence Requirement and Location:

1.3.1. Work to begin with the distribution corridor, starting on the northwest corner of E. Fire Tower Rd and Evans Rd and heading north from Pull Point #1 to Pull Point #2, noted on Detail Construction Drawings. Cutovers must be performed before continuing past Pull Point #2.

1.3.2. Continue construction of distribution corridor up to Pull Point #3. Perform cutovers. Construct underground facilities at Regency Blvd and perform cutovers. Continue from Pull Point to Pull Point, as noted on the Detail Construction Drawings, performing cutovers before moving on to the next section.

1.3.3. Setting of the transmission structures along E. Fire Tower Rd and at Greenville Blvd can be performed concurrently with the construction of the distribution corridor, but no load will be transferred while other construction is ongoing.

1.3.4. Aerial fiber along Greenville Blvd. will be transferred from the existing facilities to the new facilities. Aerial fiber along E. Fire Tower Rd will be all new construction.

1.3.5. No deviations from this sequencing will be allowed, unless coordinated with the Owner and Engineer and is contingent on system capacities, transmission structure availability, and the Owner's discretion.

1.4. Parcel with Outstanding Easements

1.4.1. Parcels with outstanding easements will not be available for construction until verbal or written authorization is issued by the Owner or its representative Engineer. These parcels are identified in red on the Detail Construction Drawings #20, #21, and #28: parcel identification numbers are 216, 217, 225, 226, 232 and 237.

1.5. Contractor Responsibilities

1.5.1. Verify all materials provided by GUC before installation.

1.5.2. Verify nails in the field before setting poles. Poles shall be placed on the nail as shown in the plans. Deviations without prior engineering approval shall be corrected at the Contractor's expense.

1.5.3. Provide 3 weeks' notice for switching. Prolonged switching shall not be permitted. Temporary mechanical jumpers shall not be used for long term construction. Contractor will be responsible for assisting with switching procedures, this includes but is not limited to removing/installing jumpers, installing/removing floaters, operating switches, using load break mechanicals, and installing mechanicals. Delays in switching shall not be considered valid reasons to request a change order.

1.5.4. Coordinate with GUC, GUC Representatives, and DOT as required.

1.5.5. Ensure all installations, removals, and transfers of poles, pedestals, cabinets, conductors, and hardware replacements, are complete.

1.5.6. Follow the sequence of double and single circuit relocations.

1.5.7. Follow special provision ensuring loads are transferred and cutovers are performed as work progresses.

1.5.8. Minimize facility exposure of temporary construction unless approved by engineering.

1.5.9. Maintain compliance with all applicable safety, regulatory, and industry standards.

1.5.10. Maintain compliance with all NCDOT-established working hours, lane closure restrictions, and traffic control requirements.

1.5.11. Include all labor, equipment, and incidental items in the proposal.

1.5.12. Engineering will obtain permits for work at railroad crossings and provide them to the Contractor. Obtaining flagging for activities inside railroad Right of Ways will be the responsibility of the Contractor.

1.5.13. Any Change Orders for work not accounted for in this bid will use the original bid unit pricing. Approved Change Orders will be paid out all at once at the end of the project.

2. GENERAL

2.1. These specifications provide for the construction of overhead and underground distribution and overhead transmission power facilities as specified by the owner. The owner is defined as the organization contracting for the services.

2.2. It is the responsibility of the owner to ensure that all construction work shall be accomplished in a thorough and workmanship manner in accordance with the staking sheets, plans and specifications, and the construction drawings.

2.3. If construction work is performed by the Owner's force labor account crews instead of a contractor, any reference to "Contractor" in the narrative portions or drawings of this specification shall also apply to the force labor account crews.

2.4. The provisions of 7 CFR 1724.50, Compliance with National Electrical Safety Code (NESC) applies to all borrower electric system facilities regardless of the source of financing.

2.4.1. The owner shall ensure that its electric system, including all electric distribution, transmission, and generating facilities, is designed, constructed, operated, and maintained in accordance with all applicable provisions of the most current and accepted criteria of the NESC and all applicable and current electrical and safety requirements of any State or local government entity in which they serve.

2.4.2. Any electrical standard requirement established by GUC are in addition to, and not in substitution for or a modification of, the most current and accepted criteria of the NESC and any applicable electrical or safety requirement of any State or local governmental entity.

2.5. All work shall be done in a thorough and workmanlike manner to produce a complete and functional system with minimal interruption to customers served by existing facilities.

3. CODES AND STANDARDS

Codes, standards, or other documents referred to in this specification shall be considered as part of this specification. The following codes and standards are referenced:

3.1. American Institute of Steel Construction (AISC), *Specification for the Design, Fabrication and Erection of Structural Steel for Buildings*, latest edition.
3.2. American Society of Civil Engineers (ASCE) Standard, *Design of Steel Transmission Pole Structures*, Manual 48, latest edition.
3.3. American Society for Testing and Materials (ASTM), various standards, latest version.
3.4. American Concrete Institute (ACI), *Building Code Requirements for Reinforced Concrete*, ACI 318, latest edition.
3.5. American Welding Society (AWS), *Structural Welding Code*, AWS D1.1, latest edition.
3.6. American National Standards Institute (ANSI), *National Electrical Safety Code*, ANSI C2, latest edition.

3.7. Society for Protective Coatings (SSPC, formerly Steel Structure Painting Council), *Surface Preparation Specification*, SSPC SP6/NACE NO.3, latest edition.

4. REMOVALS

4.1. Removals shall consist of removing each and every item designated on the drawings, the disassembling of structures into material items, and the transportation of the items from the site of the work to the storage area designated by the Commission. Conductor removal shall include the coiling or reeling of the conductor removed in a workmanlike manner.

4.2. Poles with telecommunication attachments shall be topped at the highest attachment. Poles without telecommunication attachments shall be removed.

4.3. Conductor removal shall include the coiling or reeling of the conductor removed in a workmanlike manner.

4.4. Anchor assemblies shall be removed by removing the anchor rod only. If the anchor rod cannot be unscrewed, the rod must be cut or bent down so as to be a minimum of eighteen inches (18") below the ground line. Screw-type anchors shall be completely removed.

4.5. The removal shall include any necessary handling, re-sagging, and retying of conductors in those cases where an existing assembly unit will be removed and replaced by a new assembly unit and where any existing conductor is to be retained. Removal will also include any holding or handling of main line or tap conductors at tap lines, angles, and deadends where such is involved and the reinstalling of such conductor, including re-sagging and reconnection. It shall also include reinstalling any conductors temporarily detached.

4.6. The Contractor shall reinstall, at his own expense, any other items removed by him for his own convenience.

4.7. Wood poles shall be cut into sections no longer than 45 feet in length and transported to the wood pole disposal area designated by the Commission.

4.8. All materials removed as part of the work and not specified to be reused will remain the property of the Commission.

4.9. Steel poles are to be returned to the Commission under direction of the Engineer. Concrete poles are to be disposed and will be the responsibility of the Contractor.

5. TRANSFERRING

5.1. Transferring shall consist of disconnecting existing material and reinstalling this material in a different location on the same structure or a new structure, provided the new structure is adjacent to the existing structure.

5.2. The transfer shall include any necessary handling, re-sagging, and retying of all conductors in those cases where an existing assembly unit will be removed and replaced by a new assembly unit and where any existing conductor is to be retained. Transfer will also include any holding or handling of all conductors at tap lines, angles, and deadends where such is involved and the reinstalling of such conductor, including re-sagging and reconnection. It shall also include reinstalling any conductors temporarily detached.

5.3. Contractor will be responsible for all service transfers.

6. POLES-WOOD AND/OR TUBULAR STEEL

6.1. Inspection

6.1.1. All main-line distribution poles will be wood, unless otherwise noted.

6.1.2. The Contractor shall not install a pole that, in his opinion, or the opinion of the Commission or Engineer, has been damaged or is otherwise unsafe. The Contractor shall promptly report any damaged or questionable pole or other component to the Commission and Engineer and confirm the report in writing.

6.2. Handling and Storage

6.2.1. The Contractor will be responsible for any damage to the poles and arms resulting from his handling, transporting, or storing procedures.

6.2.2. Poles and structural members' arms shall not be stored directly on the ground. Stored poles and arms shall be elevated from the ground using wood or other suitable non-abrasive blocking. Poles are to be stored with identification marks clearly visible.

6.3. Lifting and Setting

6.3.1. All poles shall be lifted in accordance with such precaution required to eliminate the possibility of bending or overstressing any section. Nylon slings shall be used to avoid damage to pole finish. During lifting, all flexible components shall be restrained to prevent any damage to insulators or pole finish.

6.3.2. The minimum setting depths shall be as follows:

Pole Length (Feet)	Setting Depth (Feet)
30	5.5
35	6.0
40	6.0
45	6.5
50	7.0
55	7.5
60	8.0
65	8.5
70	9.0
75	9.5
80	10.0
85	10.5
90	11.0
95	11.5

Additional embedment may be required for some construction units

6.3.3. On sloping ground, the depth of the hole shall always be measured from the low side of the hole.

6.3.4. Holes shall be approximately eight inches (8”) larger than the butt diameter of the pole unless noted otherwise and shall be at least as large at the bottom as at the top.

6.3.5. All poles shall be set plumb and in alignment except at line angle points. At line angles where horizontal post insulators are stacked on one side of the pole or suspension insulator construction is used, poles shall be offset on the bisector of the angle so that conductors will hang directly over the point of intersection in line with the tangent in both directions. All poles shall be plumb after conductors are strung. Where poles are set along the edge of cuts or embankments, or where the soil is liable to be washed out, special precautions shall be taken to ensure durable foundations and the setting depth shall be measured from the lower side of the hole.

6.4. Excavation and Backfill

6.4.1. Unsuitable Material: The Contractor shall excavate for the foundation to the dimensions and outline shown on the Drawings. Excavated material which conforms to the Specifications for backfill material may be used for this purpose. Materials which are not suitable for backfill and excess material shall be disposed of as directed by the Commission or Engineer.

6.4.2. Excavation Classification: All excavation will be classified as "common excavation." All excavation including soft shale, gravel, or other material which can be removed by hand or machine is defined as common excavation.

6.4.3. Excavation Preparation: Excavation in earth shall be to clean level surfaces of undisturbed material of adequate bearing value. Over-excavation shall be backfilled with well compacted six-inch (6") layers of aggregate base course (ABC) gravel. If the over-excavation is unnecessary, the cost of the backfill shall be borne by the Contractor. The quality of the soil and the adequacy of its bearing value shall be decided by the Engineer before backfill material is placed in any excavation. Where water is encountered, the excavation shall be kept dry by pumping during the installation of the structure and during the backfilling process. If unsuitable material is encountered at the proposed bearing surface, the Engineer may require further excavation to reach sound bearing. Backfill labor and material for this type of required over-excavation will be supplied at the Contractor's expense and should be included in the Unit Price for "M-2 (Stone Backfill)" in the Proposal Section. The Contractor will be paid on a per cubic yard unit basis.

6.4.4. Gravel Base: The stone or gravel base cited in Section 6.4.3 shall consist of a mixture of graded aggregate, coarse and fine, together with soil binder. The coarse aggregate shall consist of sound, tough, durable particles or fragments of gravel or stone. The material shall be placed in six-inch (6") layers and thoroughly compacted. A gravel base shall be formed before pole is placed in the excavated hole.

6.4.5. Excavation Maintenance: The excavation shall be maintained in a safe, clean and sound condition up to the time of placement of pole. The excavation shall be suitably protected when not attended. Whenever necessary, the Contractor shall re-excavate materials which have accumulated in the previously prepared excavation. Any muck or other

unsatisfactory bearing material resulting from frost action or entrance of water into excavation previously prepared to the required depth for sound bearing shall be removed and replaced with well compacted ABC gravel backfill at the Contractor's expense.

6.4.6. Sheeting and Shoring: The Contractor shall do all bracing, sheeting, and shoring necessary to support and protect all excavations as required for safety and to conform to laws and regulations of all governmental bodies having jurisdiction. When sheeting is used, it shall be removed during or upon completion of backfilling.

6.4.7. Backfill: All backfill around the pole base shall be compacted in six-inch (6") layers by means of mechanical tampers. Excavated material is suitable for backfill, the Contractor shall at his expense spread and aerate the material around the structure after the excavation has been completely backfilled with the specified material. The surplus earth shall be placed around the pole in a conical shape and packed tightly in order that water will drain away from the pole. The degree of compaction to be attained for all backfill shall be the equivalent density of adjacent undisturbed earth. Large stones, muck, frozen material, roots, or other undesirable material shall not be used for backfilling. This material, furnished by the Contractor, shall be locally available and when placed and compacted in six-inch (6") layers will bind and compact around the foundation. Sources of this material shall be approved by the Engineer.

6.5. Repair or Alteration

6.5.1. Repair: Bent, twisted, or otherwise damaged structural members shall not be repaired or installed except at the written direction of the Engineer. Repair methods shall be approved by the manufacturer. Damaged base plates or butt splice plates shall not be repaired or installed. Pole wall sections shall not be repaired in the area of slip joints or lap splices.

6.5.2. Touch-Up: It will be the responsibility of the Contractor to touch up all galvanized steel pole and bolt surfaces or Ameron Dimetcote painted surfaces that are damaged by the Contractor during handling, transporting, storing, or erecting. Galvon or similar touch-up material for galvanized surfaces or Ameron Dimetcote for painted surfaces will be furnished by the Commission and will be applied in accordance with the manufacturer's recommendations. Areas of the pole to be below the ground line shall be repaired prior to pole installation with

materials designated by the manufacturer to inhibit corrosion

6.6. Vibratory Pole Base

6.6.1. Vibratory pole bases shall be installed by use of a vibratory hammer. The Contractor shall include the cost of the vibratory hammer in the pole labor installation unit.

6.6.2. Vibratory pole bases shall be installed in accordance with the construction assembly drawings. (See TMF-VPB and TMF-VPB-F)

6.6.3. Vibratory pole bases shall be installed with a frequency between 400 and 1600 vibrations per minute and a stroke amplitude between one- half inch (1/2") and one and one-half inches (1-1/2") maximum.

6.6.4. The Contractor is responsible for any damages incurred during vibratory pole base installation. The Contractor is responsible for obtaining the services of a geotechnical engineering firm to provide vibration monitoring.

6.6.5. Peak Particle Velocity shall be limited to two inches (2") per second maximum for residences.

6.6.6. Ground vibrations shall be limited to 40 Hz minimum and should be monitored in areas in close proximity to building, walls, driveways, underground utilities, etc. to prevent damage.

6.7. Holes in Pole

6.7.1. Transmission and distribution under-build pole top assembly attachment point holes will be predrilled at the factory. However, the Contractor may be responsible for field drilling transmission, distribution, fiber attachments, or any other holes required for construction (see drawings for details). Cost for drilling these holes shall be part of the pole top assembly unit. In no instances will additional charges be paid for drilling holes. The contractor shall touch up the finish of all other holes with cold galvanizing.

6.7.2. Mismatched Bolts and/or Holes: The Engineer shall be promptly notified of the discovery of mismatched bolts and holes, misaligned connections, or misaligned foundation bolts. The Engineer will decide upon the corrective action to be taken.

6.7.3. Any unused holes are to be plugged and sealed using galvanized steel plugs or caulk and plastic plugs.

7. ROCK ENCOUNTERED DURING EXCAVATIONS

7.1. The Contractor shall be responsible for the removal and disposition of solid rock when encountered in holes for wood poles and tubular steel poles. Solid rock shall be defined as solid, naturally occurring mineral formations that cannot be effectively removed by conventional trenchers, backhoes, or pressure augers on line-trucks. Loose rock or limestone in intermittent layers that result in "difficult digging" shall not be defined as solid rock excavations. "Solid rock" shall require the use of air hammers, blasting or other specialized equipment. (Note: Blasting must be approved by the Commission in accordance with local ordinances.)

7.2. An adder (M-1 (Rockhole)) will be quoted by the Bidder in the Proposal Section to establish a labor cost for rock excavations, including disposition to the Commission's landfill, on a per- cubic-yard basis. Quantities will be agreed upon jointly by the Contractor and the Commission (or Engineer) as the excavations occur. Over excavation to remove rock will not be counted in the quantity of rock excavations. The volume of rock excavation adder will be computed based on the normal pole hole diameter and depth, as if no rock were encountered. Rock adders will not apply to man-made surface treatments, such as asphalt, concrete or gravel.

~~8.~~ DAVIT ARMS

8.1. Davit arms are being used on some structures for this project. The arms and all attachment hardware are being supplied by the steel pole manufacturer. It will be the Contractor's responsibility to install the davit arms and ensure proper orientation of the arms.

9. GUYS AND ANCHORS

9.1. Guys shall be attachment type utilizing preformed guy grips or strand vices. Guys shall be installed in locations specified by the Engineer. Points of attachment to poles shall be as shown on Construction Drawings. Guys shall be installed before conductors or overhead ground wires are strung.

9.2. All anchors and rods shall be in line with the strain. All anchors are to be single or multiple helix screw type or expanding rock type and shall be located as staked by the Engineer. Anchor rods shall be so installed that approximately six inches (6") of the rod shall remain out of the ground or extend more than twelve inches (12") out of the ground in cultivated fields. The setting of each anchor in regard to depth, torque, and position shall be inspected by the Commission's Construction representative and his approval given in writing. The Contractor shall fill out anchor installation reports, furnished by the Engineer, as each anchor is installed.

No anchor installations shall be invoiced without copies of the installation reports properly filled out and attached.

9.3. All anchors shall be installed using a Hydraulic Torque Indicator control tool. Expanding rock type anchors shall be installed and torqued per manufacturer's recommendations.

9.4. Anchor locations shall be checked and verified by the Contractor prior to installation to assure that guys do not conflict with phase conductors. This is especially critical when transmission guying passes through distribution phase positions. Where fiberglass guy strain insulators are installed in guys, a minimum of ten inches (10") must be maintained to any under-build phase conductors.

9.5. Where multiple fiberglass guy strain insulators are to be installed, in one (1) guy strand, they shall be connected using a chain link of the appropriate size.

10. HARDWARE

10.1. Hardware shall be installed as indicated on the Drawings. All bolts shall be installed with nuts and locknuts. Bolts shall be long enough to accommodate the necessary nuts, washers, etc. without projecting more than one and one-half inches (1-1/2") or less than one-half inch (1/2") at the free end. They shall not project more than one-fourth inch (1/4") into an eye-nut installed.

10.2. All bolts and nuts shall be installed to torques specified by the pole manufacturer or the Engineer. Wrenches used in assembly of anchor bolts shall not deform nuts nor damage factory finish.

10.3. Upon completion of pole setting, conductor sagging and pole plumbing, all top and bottom anchor bolt nuts shall be secured by tack welding to the pole base plate. The weld area shall be cleaned, primed and painted in accordance with the manufacturers' recommendations.

10.4. Care should be exercised during all phases of construction to protect all bolt threads. Nuts should operate on bolt threads without forcing. In case of anchor bolt thread damage during pole installation, repairs shall be made as directed by the Engineer.

10.5. Any unused holes are to be plugged and sealed using galvanized steel plugs or caulk and plastic plugs. No holes or voids are to be left unsealed when installation is complete.

11. INSULATORS

11.1. Care shall be exercised in handling and erecting insulators.

11.2. All insulators shall be handled with utmost care during storage, transportation, assembly, and installation. Care shall be taken to avoid bending stresses in insulator strings during handling. Insulators shall not be dropped. Insulators subjected to these or any other abuses or damage shall be permanently marked, rejected from the job and charged to the Contractor.

11.3. All insulators shall be protected from the accumulation of all foreign materials insofar as is possible. Mud, grease, and other foreign materials shall be cleaned from insulators using clean rags. Wire brushes may not be used for the cleaning of any insulator parts. Upon installation, all insulators shall be clean on all surfaces. Workmen shall not climb on insulators at any time.

12. GROUNDING ASSEMBLY

12.1. Wood Poles

12.1.1. Driven ground rods (DM-9) shall be installed on all wood distribution poles as indicated on the Staking Sheets.

12.1.2. Refer to the following drawing for the grounding of wood distribution poles: DM-9

12.2. Direct Embedded and Vibratory Base Steel Poles

12.2.1. Driven pole grounds (TM-9SP) shall be installed on all steel transmission poles.

12.2.2. Steel transmission poles with distribution under-build shall share a common ground rod (TM-9SP).

12.2.3. Refer to the following drawings for the grounding of direct embedded steel transmission poles:

TM-9SP TM-9R
TM-9X(S)

12.2.4. Installation cost of ground rods to include testing of ground resistance and generating a report of test results.

The following is the minimum information to be included in the test report:

12.2.4.1. Ambient Air Temperature

12.2.4.2. Relative soil moisture content (i.e. Dry, Moist, Wet)

12.2.4.3. Total number of rods installed to achieve 25 ohms.

12.2.4.4. Ground Resistance Reading after installation of each ground rod section

12.2.4.5. Type of meter used

12.2.4.6. Date and time of test

12.2.4.7. Person or persons performing test

All measurements are to be made without connection to steel pole or neutrals.

Ground Resistance Test reports to be submitted to Owner and Engineer for all installed structures.

12.3. Where transmission and distribution assemblies are joint use structures, a common ground shall be shared. For wood poles, the common ground will be a ground wire. For steel poles, the common ground will be the pole itself.

12.4. Guys and overhead ground wires shall be attached to the common ground.

12.5. The distribution neutral shall be attached to the common ground.

12.6. Ground rods shall be driven to their full length into undisturbed earth according to the unit assembly drawings. The top of the ground rod shall be located a minimum of one foot (1'-0") below grade or as indicated otherwise on the Assembly Drawings.

12.7. Ground rods shall be 1-5/8" x 8'-0" and 1-5/8" x 12'-0" Copper. Extensions (DM-9) shall be added if necessary, to obtain a verifiable ground resistance of twenty-five (25) ohms or less.

12.8. Ground wire for distribution poles shall be No.4 AWG soft drawn tinned copper wire.

13. CONDUCTORS

13.1. Distribution Conductors

13.1.1. Care shall be exercised to avoid kinking, twisting, or abrading the conductor in any manner. Conductors shall not be trampled on, run over by vehicles, or dragged over sharp rocks. The wire on each reel shall be inspected for cuts, kinks, or other injuries. Injured portions or crooked or imperfect splices in the conductor shall be cut out and the wire respliced.

13.1.2. Conductors shall be pulled over suitable rollers or stringing blocks properly mounted on the pole or crossarm to prevent binding while stringing.

13.1.3. Installation of conductors and accessories shall be done in accordance with manufacturer's recommendations.

13.1.4. With post- and pin-type insulators, the conductors shall be tied in the top groove of the insulator on tangent poles and on the side of the insulator away from the strain at angles greater than ten degrees (10°). Post- and pin-type insulators shall be tight on the pins and on tangent construction the top groove must be in line with the conductor after tying in

13.1.5. There shall not be more than one splice per conductor in any span and no splice shall be located within ten feet (10'-0") of the conductor support. Splices will not be permitted in road or street crossing spans.

13.1.6. Utmost care shall be exercised in installing parallel groove clamps. The contact surface of the conductor shall be clean and bright. A steel brush shall be the principal cleaning medium; contact compound shall be used for all connections to aluminum conductors. Those same precautions for cleaning shall also apply to the conductor before splicing.

13.1.7. Conductors shall be sagged in accordance with sag and tension charts or tables furnished by the Engineer. Under no circumstances will a decrease in the specified sag be allowed. Sagging by sighting between targets or dynamometer is recommended.

13.1.8. The conductor temperature at the time and place of stringing shall be determined by a certified, thermometer inserted in a short section of conductor. The temperature at which the conductor is sagged and the spans in which sags are measured shall be recorded and the information given to the Engineer.

13.2. Transmission Conductors

13.2.1. The Contractor shall install all phase conductors and shield wires by the tension stringing method. This method shall always result in the conductor having sufficient tension to clear all obstructions by an amount adequate to provide safety to personnel and the public. The conductor shall not be allowed to touch or drag across the surface of the ground, any obstruction or guard structure.

13.2.2. If at any time during the construction of the line the conductor should come into contact with the ground or should suffer any other form of

damage the conductor shall be lowered and inspected by the Commission's designated Construction Representative. The Commission's Construction Representative shall judge the method of repair or cleaning to be exercised by and at the expense of the Contractor. Forms of repair may include but will not be limited to cleaning of foreign matter, smoothing with suitable abrasives (emery cloth or equal), cutting and splicing, or replacing.

13.2.3. The Contractor shall install guard structures at crossings of all other overhead utilities, all railroads, public roads, and navigable waterways. Other guard structures may be installed for the protection of the conductor. Guard structures shall be of such construction as to prevent the conductor from dragging on the structure surface since such contact would require conductor repair. Upon completion of conductor stringing in a line section, all guard structures shall be immediately removed in their entirety and all pole holes shall be backfilled and properly compacted to original grade. The Contractor shall be responsible for obtaining the required local, state, and/or federal permits for erection of guard structures on public rights-of- way.

The Contractor shall submit to the Commission a sketch of the guard pole installations with dimensions locating and outlining the number of guard poles and their placement on public rights-of-way. The Contractor shall supply this information two weeks in advance of the guard pole use. Once this sketch has been approved by the state, no changes regarding number and placement of guard structures will be allowed without proper written approval.

13.2.4. The Contractor shall notify the Commission's designated construction representative at least five (5) days in advance of the intended date of conductor pulling across any transmission or distribution line, any highway, stream, or environmentally sensitive area (wetlands, etc.). The Contractor shall also directly notify any public authorities of such operations as may be required in permits, which the Commission or Contractor has obtained.

13.2.5. OHGWs will deadend at structure prior to crossing under DEP transmission lines and will begin at the structure immediately following the DEP crossing.

13.2.6. The Contractor shall make himself aware of potential sources of electrical contact, induction, or static charge buildup which may be encountered during construction of the line. The Contractor shall be responsible for conducting operations in such a manner as to avoid hazards of this type. Measures shall be taken by the Contractor to prevent dangerous voltages between various pieces of equipment and between equipment and ground

in cases of accidental contact with foreign electric sources. Such measures shall include but not be limited to bonding of pulling equipment and installation of adequate conductor and equipment grounds during all phases of construction. The Contractor shall be responsible for the evaluation of hazards and the determination of protective methods. The Contractor's methods must be in compliance with OSHA Safety Regulations and are subject to review by the Commission's Engineer and the Commission's Construction Representative.

13.2.7. All equipment used by the Contractor shall be of such type and condition as to ensure installation of conductor without damage. Such damage would include strand overstress, birdcaging, marring of the surface, or the accumulation of foreign material. Tensioning and pulling equipment shall be operated in such a manner as to avoid overstressing of conductors or structures.

13.2.7.1. The tensioner shall be of a double bullwheel design with an offset of approximately one-half (1/2) groove width between the tandem bullwheels. Bullwheels shall be arranged so that conductor enters the system on the left and exits on the right side of the system (facing direction of pull). These directions shall be reversed for left-handed lay conductors. Single V-groove bullwheels will not be allowed. Bullwheel grooves shall be of a polished smooth finish or may be elastomer lined. However, polished smooth bullwheel grooves will not be allowed where the pulling line passes in the same grooves as the conductor. The tensioner shall have a braking system capable of continuously holding a desired tension. Heat from the braking system shall not be transmitted to the conductor. Conductor reels shall be located behind the tensioner with a maximum recommended angle of two degrees (2°) for entry of conductor into the bullwheel. A constant back tension of approximately 1,000 pounds should be maintained on the conductor to minimize birdcaging in the tensioner and conductor over-running. The tensioner and puller shall be located so that under no condition is the average slope of the top conductor less than four (4) horizontal to one (1) vertical. If sagging temperature is 60°F or greater, the Commission's Construction Representative may allow a slope of as low as 3:1 to be used.

13.2.7.2. Stringing blocks (stringing sheaves or travelers) shall be of such a design as to minimize conductor deformation during pulling and to enhance good sagging practice through low friction. Blocks shall be equipped with ball or roller bearings and shall be maintained in accordance with the manufacturer's

recommendations. It is recommended that block grooves be elastomer lined. Unlined smooth polished grooves may be used for conductor stringing if the block material is aluminum or magnesium alloy. However, in no case shall unlined grooves be used if steel pulling line is used.

13.2.8. Pulling and sagging of conductor shall be accomplished as specified below.

13.2.8.1. Pulling tensions shall be limited to 10% of rated strength as specified in IEEE 524. See sag and tension charts in Appendix E for each conductor's rated strength (Ultimate Tension). The Contractor shall obtain approval by the Commission's Engineer to exceed the 10% of rated strength limit. The Contractor is instructed to select pulling sites such that maximum sags near the tensioner position will not result in inadequate ground clearances. Block efficiency and pulling tension limits may preclude pulls of the maximum dimension noted above.

13.2.8.2. Conductor shall not be left in stringing blocks for more than twenty-four (24) hours before pulling to initial sags specified by the Commission's Engineer. If so directed by the Commission's Construction Representative, sag tables corrected for creep time shall be used. After being sagged, the conductor shall remain in the stringing blocks for twelve (12) hours prior to being clipped in. However, the total time in stringing blocks shall not exceed four (4) days, ninety-six (96) hours prior to clipping in.

13.2.8.3. Conductor sagging shall be accomplished by use of a combination of dynamometer and sag boards. Sags will be checked at a minimum of three (3) locations for each mile of sag distance. No sag distance shall have less than two (2) spans checked before acceptance. Sags shall be checked in each unusually long span and on each side of unusual horizontal or vertical angles. The Contractor and the Commission's Construction Representative will mutually agree on which spans are to be used as sag checks at least two (2) days prior to the commencement of a pulling operation. The Contractor shall make available to the Commission's Engineer for sag checking such instruments and setups as are being used to sag the conductor. Sag tolerances shall be minus zero (0) plus six inches (6") from those furnished by the Engineer. Temperatures used in establishing sags shall be established by a certified etched- glass thermometer inserted in

a sample conductor section exposed to sunlight and air temperatures the same as those to which the tensioned conductor is exposed.

13.2.8.4. If emergency conditions or inclement weather require the pulling- sagging sequence to be interrupted before the completion of clipping in, it shall be the responsibility of the Contractor to make sure that adequate clearances exist under the conductor at all points and that the conductor is secure. The conductor tension shall not exceed seventy percent (70%) of the sag tension for the average temperature of the period. The Commission's Engineer will notify the Contractor of any adjustments required to the standard sag tables.

13.2.9. Utmost care shall be exercised in installing parallel groove clamps. The contact surface of the conductor shall be clean and bright. A steel brush shall be the principal cleaning medium; contact compound shall be used for all connections to aluminum conductors. Those same precautions for cleaning shall also apply to the conductor before splicing.

13.2.10. Jumpers and other leads connected to line conductors shall have sufficient slack to allow free movement of the conductors. Slack will be provided at least two (2) bends in a vertical plane, one in a horizontal plane or the equivalent.

14. RIGHT OF WAY GENERAL

14.1. Access to right-of-way areas shall be from existing public or private roads or along existing Commission rights-of-way. Where private roads or trails are used, the Contractor shall obtain permission in writing from the property owner for their use with copies to be furnished to the Commission's Engineer.

14.2. All right-of-way clearing shall be completed for a section of the line before pole setting may begin. No poles shall be set with right-of-way not completely cleared.

14.3. All right-of-way clearing will be by the Commission.

14.4. At the completion of construction and clean-up, the Contractor shall regrade all disturbed right-of-way areas to their preconstruction contours where practicable. All cuts or fills shall maintain a maximum slope of 3:1 in order to insure as little run off as possible. Any soil erosion and sedimentation devices required to stabilize and/or reduce further erosion shall be installed. All devices installed during construction and no longer required shall be removed. All disturbed or denuded areas shall be covered with topsoil, if required, fertilized, limed, seeded,

strawed, and tacked as necessary. Fertilizer, lime, and seed rates and mixes shall be as specified by the local soil conservation service for the time of year applied. All cost for right-of-way clean-up and restoration shall be included in the overall price of the project.

14.5. Maintenance of Existing Rights-of-Way

Existing rights-of-way, both public and private, must be maintained during construction in such a manner so as not to create a hazard. Deep ruts shall be backfilled and graded out. Denuded grass and vegetation areas shall be replanted with a suitable seed mixture. At the end of the construction, the right-of-way should be left in as good or better condition than it was before construction began. All cost of maintaining existing right-of-way and/or reseeding shall be borne by the Contractor.

14.6. Temporary Service or Access Roads

14.6.1. If, during the course of construction, it should become necessary for the Contractor to construct, modify, widen, grade, or perform any other earth work in order to provide access to or work areas around any facilities covered in this Contract, he shall do so at his own cost.

14.6.2. The Contractor shall be responsible for all permits required for such construction. He shall also be responsible for the installation and maintenance of any soil erosion and sediment control devices required by local, county, or state agencies.

14.6.3. All cost associated with the construction, maintenance, removal, and rehabilitation of any area associated with the rights-of-way, access roads, service roads, etc., shall be included in the Contractor's overall price. A separate cost item will not be billed for this work.

14.7. Poles & Foundations in Wetlands

14.7.1. Any excavation for poles and/or foundations in wetland areas shall utilize extra precaution to avoid disturbing the root mat around the excavated area. Tree stumps and root mats must be left intact in forested wetlands.

14.7.2. Any excess excavated soil in wetland areas must be removed from the wetland area and deposited (spread evenly) on higher ground.

14.7.3. No concrete may be poured directly in wetland areas. The use of steel vibratory casings/forms must be used to prevent contact of concrete with surface waters. The cost of the casing/form must be included in the foundation unit.

14.7.4. No mechanized clearing (bulldozers) in jurisdictional wetlands.

14.7.5. Minimize soil disturbance in jurisdictional wetlands (use mats where possible).

14.7.6. Maintain preconstruction contours in jurisdictional wetlands.

15. STORAGE OF MATERIAL AND EQUIPMENT

15.1. All material and equipment to be used in construction shall be stored so as to be protected from deteriorating effects of the elements. If outdoor storage cannot be avoided, the material and equipment must be protected from the elements as appropriate, and with due regard to public safety.

15.2. All materials will be furnished by owner. Materials shall be requested two weeks in advance of needing said materials. Failure of the contractor to verify they've received the needed material to complete their daily work plan shall not be considered a valid reason to request a change order.

16. HANDLING OF CABLE

16.1. The cable shall be handled carefully at all times to avoid damage, and shall not be dragged across the ground, fences or sharp projections. This includes setting up utility signs to mark cable laying in a vehicle traffic area to prevent cable damage. Care shall be exercised to avoid excessive bending of the cable. The ends of the cable shall be sealed at all times against moisture with suitable end caps. Where it is necessary to cut the cable, the ends will be terminated or sealed immediately after the cutting operation.

17. PLOWING

17.1. When cables, flexible conduit, and cable-in-conduit are to be installed by plowing, it is the responsibility of the owner to ensure that the plowing equipment be subject to the approval of the Owner and the public authorities having jurisdiction over highway and road rights-of-way. The plow shall be provided with a means to assure positive hold- down of the plow blade to provide proper depth at all times. All cable will be installed in conduit.

17.2. The design of the plowshare shall ensure that the cable passing through the plow will not be bent in a radius less than 12 times the outside diameter of the cable. The

equipment shall be capable of extending the plow a minimum of 6 inches below the specified depth under all terrain conditions of plow utilization.

17.3. The owner shall ensure that equipment and construction methods used during construction cause minimum displacement of the soil. The slot made in the soil by the cable plows shall be closed immediately by driving a vehicle track or wheel over the slot or by other suitable means.

17.4. Starting and terminating points of the plowing operation shall be excavated prior to cable installation to reduce possible cable damage and to assure sufficient burial depth.

17.5. During the plowing operation, care is to be exercised to feed the cable or wire into the ground through the plow loosely and at minimum tension. Besides using proper equipment and construction methods, supervision by the owner or owner's representative shall be furnished at all times at the site of plowing operations to assure compliance with these specifications.

17.6. If, during the plowing operation, the plow should strike a buried object or rock that would stop the equipment and necessitate removal of the plow from the ground, the plow must be removed from the ground carefully and, if practical, without backing the plow. If it should be necessary to back the plow to remove it from the ground, the cable must be uncovered a sufficient distance back for inspection by the Owner to determine whether the cable or wire has been damaged.

17.7. The cable shall be inspected carefully as it is payed out from the reel to be certain that it is free from visible defects. Every instance of damaged cable observed at any time, whether prior to installation, during installation, or when discovered by test or observation subsequent to installation in plant, shall be immediately called to the attention of the Owner. Repair or correction of such damage shall be done promptly and in accordance with the written instruction of the Owner. The location of any such repair shall be indicated on the staking sheet.

18. SPECIAL REQUIREMENTS FOR COORDINATION BETWEEN OWNER AND CONTRACTOR WHERE CABLE/CONDUIT IS TO BE INSTALLED BY PLOWING

18.1. Staking sheets shall be reviewed jointly in the field by the contractor and Owner prior to the start of construction. At that time, the Contractor shall propose any desirable changes or clarifications. These changes, if approved by the Owner, shall be made and recorded on the staking sheets. No changes on the staking sheets shall

be made by the Contractor without the prior written approval of the Owner. A representative of the Owner shall remain in the immediate vicinity of the plowing operations at all times and will consider and possibly approve any acceptable changes proposed by the Contractor. A representative of the Owner shall also inspect any damage to cable and approve acceptable methods of repair or correction of such damage in accordance with the provisions of these specifications.

18.2. In the event that rock is encountered during the plowing operation so that the buried cable cannot be installed to the required minimum depths in soil, the Contractor shall determine for the Owner the nature and extent of the rock encountered. Based on this information, the Owner will determine whether the cable is to be rerouted, trenched in rock, protected by conduit or concrete or a change made to aerial construction. This decision shall be made promptly, and appropriate changes in units shall be made on the staking sheets. Such changes shall be in writing, dated, and initialed by the Owner.

18.3. Due to the necessity of making on-the-spot corrections and changes on staking sheets, it may not be possible for the Owner to issue revised staking sheets to the Contractor in all cases. When changes are made, dated, and initialed by the Owner on a set of the Contractor's staking sheets, it shall be the Contractor's responsibility to transfer these changes to all other sets of staking sheets being used by the Contractor for construction purposes.

18.4. The Contractor shall provide a competent representative to work with the Owner on the inventory and inspection of buried cable units. The inventory of buried cable will be made as soon after the plowing operation as practical to avoid later disagreements on the quantity of cable installed when changes are required in the project.

19. TRENCHING

19.1. It is the responsibility of the owner to ensure that all trenching depths specified are listed as minimum as measured from the final grade to the top surface of the cable or conduit.

19.2. The routing shall be as shown on the staking sheets and plans and specifications unless conditions encountered are such that changes are necessary to accomplish the work. In such event, the Owner shall be notified promptly.

19.3. If rock or other difficult digging (i.e. trench caves in) is involved, the Contractor shall determine the nature and extent of the difficulty, and the Owner will determine whether rerouting, rock trenching, plowing, rock sawing or other changes are necessary.

19.4. Loose soil or crumbly rock shall not be considered as "difficult digging." The trench widths specified are minimums and should be increased as necessary to obtain the required depths in loose soils.

19.5. Where trenches are intended for more than one cable, particular care shall be taken to provide for extra depth and width to allow for soil falling into the trench during the laying of the first cables.

19.6. Care shall be exercised to minimize the likelihood of waterflow since this may cause trench damage and reduction in trench depth. If this occurs, the trench must be cleared to the specified depth before installing the cable.

19.7. All trenches including secondary and service trenches shall follow straight lines between staked points to the greatest extent possible to help in cable locating. The trenches shall be dug so that the bottom has a smooth grade. Large rocks, stones and gravel in excess of l inch shall be removed from the bottom of the trench. Where this cannot be done, a 2 inch bed of sand or clean soil shall be placed in the bottom of the trench.

19.8. Construction shall be arranged so that trenches will be left open for the shortest practical time to avoid creating a hazard to the public and to minimize the likelihood of collapse of the trench due to other construction activity, rain, accumulation of water in the trench, etc.

20. INSTALLING CABLE IN TRENCH

20.1. It is the responsibility of the owner to ensure that the cable shall be placed in the trench as soon after the trenching operation as feasible. Wherever possible, cable shall be payed out from the reel mounted on a moving vehicle or trailer. The reel shall be supported so that it can turn easily without undue strain on the cable. The cable shall be carefully placed in the trench by hand. All cable placements shall be done under constant supervision to be certain that no damage to the cable occurs.

20.2. The cable shall be inspected carefully as it is removed from the reel in laying operations to be certain that it is free from visible defects. The Owner shall decide upon corrective action when defects are discovered.

20.3. Where more than one cable are to be placed in a trench, the spacings required by the specifications must be observed. Care shall be taken that any soil falling into the trench during the laying of the first cable does not reduce the clearances of the last cable below that specified. Should this occur, the excess soil shall be removed carefully by hand or with equipment so as not to damage the installed cables.

20.4. Sufficient slack, and in no case less than 24 inches, shall be left at all risers, transformer pads, pedestals and terminal points so that movements of cable after backfilling will not cause damaging strain on the cable or terminals. The cable trench shall be mechanically compacted 36 inches minimum from all riser poles, pads, pedestals and terminal points.

20.5. The ends of all secondary cable terminated below ground shall be long enough to reach at least 12 inches above the top of the underground enclosure.

21. INSTALLING CABLE BY DIRECTIONAL BORE

21.1. It is the responsibility of the owner to investigate the boring route. If the bore is in public/private right- of-way, a review of the permit is required to determine what type of construction may be required for the installation. During the boring operation, multiple bend/turns should be avoided as it increases the pulling tension on the cable. The cable and or conduits must be handled and or trained with proper guides at the entry and exit points to prevent damage. Procedures for cable handling in trenching and plowing also apply to installation by directional boring.

22. MINIMUM BENDING RADIUS OF CABLE

22.1. The minimum bending radius of primary cable is 12 times the overall diameter of the cable. The minimum bending radius of secondary and service cable is six times the overall diameter of the cable. In all cases the minimum radius specified is measured to the surface of the cable on the inside of the bend. No cable bends shall be made within 6 inches of a cable terminal base.

23. CONDUIT

23.1. All cable will be installed in conduit.

23.2. Cable Protection shall have all exposed ends of the conduit plugged during construction to prevent the entrance of foreign matter and moisture into the conduit. Burrs or sharp projections which might injure the cable shall be removed. Conduits shall be sized to meet the fill limits based on the number and size of cables to be installed. Lubricants used in the aid of cable pulling shall be compatible with both the conduit and cable.

23.3. Direct Buried Riser shield or conduit shall extend at least 18 inches below grade at all riser poles. If full round conduit is used as a riser shield, an end bell shall be installed on the lower end to prevent damage to the cable. Any aluminum portion of the riser shall not be placed below grade.

23.4. Three Phase Riser Guide conduit provides good protection when all three phases are in one conduit. The advantage of each phase in a separate conduit is having improved reliability and lower cable pulling tensions. However, the disadvantages has the separated phase and neutral currents causing induced current in magnetic metal conduits leading to increases in line losses which develops heat that can damage the cable insulation.

23.5. It is the responsibility of the contractor to perform cable pulling calculations prior to pulling through a conduit system so that maximum cable tensions are not exceeded. When pulling conductors into a conduit system, the contractor shall lubricate cable as needed to reduce pulling tensions.

24. TAGGING OF CABLES AT TERMINATION POINTS

24.1. As the cables are laid, it is the responsibility of the contractor to ensure that they are identified and tagged. The identification shall be of a permanent type, such as that done on plastic or corrosion resistant metal tags. The tag shall be securely attached to the cable. Paper or cloth tags are not acceptable. Each phase shall be marked with appropriate color tape and plastic tag.

25. JOINTS/SPLICES *(Not Applicable to this Project)*

25.1. Cable joints/splices shall be of the pre-molded rubber, heat-shrink, or cold-shrink type, of the correct voltage rating and shall be installed in accordance with the joint/splice manufacturer's instructions. Joints/Splices that depend solely on tape for a moisture barrier shall not be used.

25.2. Not more than one joint/splice may be permitted for each 2000 feet of cable installed unless authorized by the Owner. No bends may be permitted within 12 inches of the ends of a joint/splice. The cable or circuit numbers and the exact location of all joints/splices shall be noted on the staking sheets (as built).

26. PRIMARY CABLE TERMINATION AND STRESS CONES

26.1. Prefabricated stress cones or terminations shall be installed in accordance with the manufacturer's instructions at all primary cable terminals. They shall be suitable for the size and type of cable that they are used with and for the environment in which they will operate.

26.2. Any indication of misfit, such as a loose or exceptionally tight fit, shall be called to the Owner's attention. The outer semi-conductive surface of the termination shall be bonded to the system neutral. A heat-shrink or cold-shrink sleeve shall be installed to seal between the body of the termination and the cable jacket.

27. SPECIAL PRECAUTION FOR CABLE JOINTS/SPLICES AND TERMINATIONS

27.1. A portable covering or shelter shall be available for use when joints/splices or terminations are being prepared and when prefabricated terminations are being switched. The shelter shall be used as necessary to keep rain, snow and windblown dust off the insulating surfaces of these devices. Since cleanliness is essential in the preparation and installation of primary cable fittings, care shall be exercised to prevent the transfer of conducting particles from the hands to insulating surfaces.

27.2. Mating surfaces shall be wiped with a solvent to remove any possible accumulation of dirt, moisture or other conducting materials. A silicone grease or similar lubricant should be applied afterwards in accordance with the manufacturer's recommendations. Whenever prefabricated cable devices are opened, the unenergized mating surfaces shall be lubricated with silicone grease before the fittings are reconnected.

28. SECONDARY AND SERVICE CONNECTIONS

28.1. A suitable inhibiting compound shall be used with all secondary and service connections.

28.2. All secondary cable connections located below grade or in secondary pedestals shall be made with pre-insulated secondary connector blocks. Diving bells with open terminals, insulating boots or moisture barriers that depend solely on tape are not acceptable.

28.3. All transformer secondary phase terminal connections shall be completely insulated. If the secondary phase terminals are threaded studs, the connection shall be made with a pre-insulated secondary transformer connection block. If the transformer secondary phase terminals are insulated cable leads, connection shall be made with a pre-insulated secondary connector block or with a secondary prefabricated joint/splice when the transformer leads continue directly to the service.

28.4. If a transformer is so large that it must have secondary spades, the spades shall be taped or otherwise insulated. Boots used for insulation shall be taped or secured so that they cannot be readily slipped off.

28.5. Secondary connections to terminals of pole-mounted transformers shall be made so that moisture cannot get inside the cable insulation. This may be accomplished by covering the terminals and bare conductor ends with an appropriate moisture sealant or providing a drip loop.

28.6. The secondary connections and insulation shall have accommodations for all future and existing services as shown on the plans and specifications.

29. PEDESTALS

29.1. Where required, pedestal stakes shall be driven vertically into the bottom of the trench before cables are placed and shall be located as shown on the staking sheets. Pedestal posts and supporting stakes shall be in place before the cable is installed. All pedestals should be approximately at the same height above finished grade.

30. INSPECTION AND INVENTORY OF BURIED UNITS

30.1. Before any backfilling operations are begun, it is the responsibility of the Owner to ensure that the Contractor and Owner shall jointly inspect all trenches, cable placement, risers, pedestal stakes, and other construction that will not be accessible after backfilling, and an inventory of units shall be taken. If corrections are required, a second inspection shall be made after completion of the changes.

31. BACKFILLING

31.1. The first 6 inches of trench backfill shall be free from rock, gravel or other material which might damage the cable jacket. In lieu of cleaning the trench, the Contractor may, at the Contractor's option, place a 2-inch bed of clean sand or soil under the cable and 4 inches of clean soil above the cable. Cleaned soil backfill when used shall contain no solid material larger than l inch. This soil layer shall be carefully compacted so that the cable will not be damaged.

31.2. Backfilling shall be completed in such a manner that voids will be minimized. Excess soil shall be piled on top and shall be well tamped.

31.3. Pieces of scrap cable or other material remaining after installation shall not be buried in the trench as a means of disposal.

31.4. Conduit provides protection for the cable to be installed. However, the backfilling method for cable in conduit shall be the same as direct buried cable. Additional protection can be obtained by pouring a concrete cap over a partial filled backfill above the direct buried cable or conduit.

31.5. Further protection for the conduits is done by concrete encapsulation using spacers to ensure enough concrete surrounds the conduits.

32. EQUIPMENT PADS

32.1. The site for the pad shall be on undisturbed earth adjacent to but not over the trench.

32.2. The site shall be cleared of all debris and excavated to the specified depth. Gravel or sand may be added to the site and thoroughly compacted.

32.3. The developer/property owner shall provide the finished grade so steps can be taken to ensure foundations are installed level at the specified elevation.

32.4. Existing equipment pads shall be replaced in the same location as current equipment.

33. TRANSFORMERS

33.1. Existing transformers shall be carefully lifted to replace the existing pad. Existing transformers will not be replaced unless a conditional assessment of the transformer warrants replacement.

33.2. Transformers shall be handled carefully to avoid damage to the finish and shall be positioned in accordance with the staking sheets and the plans and specifications. Only qualified and experienced personnel shall be allowed to make connections and cable terminations.

34. BELOW GRADE ENCLOSURES

34.1. Excavations for sleeve-type transformer pads and other below-grade enclosures shall be made so as to disturb the surrounding earth as little as practical.

34.2. Enclosures shall be installed with side walls plumb. When enclosures are of fiber, plastic, or other semi-flexible material, backfilling should be done with covers in place and with careful tamping so as to avoid distortion of the enclosure.

34.3. When installation is complete, the cover of the enclosure shall not be lower than and not more than 2 inches higher than the grade specified by the Owner.

34.4. Soil in the immediate vicinity shall be tamped and sloped away from the enclosure. At the Owner's option, the excess soil shall be removed from the site or spread evenly over the surface of the ground to the satisfaction of the Owner.

35. SACRIFICIAL ANODES

35.1. Sacrificial anodes specified shall be installed with backfill package intact and connecting leads positioned for proper connection after the equipment is in place. Anodes shall not be moved, positioned, lifted, nor lowered into place by pulling on the connecting leads.

36. GROUNDING

36.1. All neutral conductors, ground electrodes, sacrificial anodes and grounded parts of equipment shall be interconnected. All interconnections for grounding shall be made and consistent with installation standard used by the owner. A copper-clad or galvanized steel ground rod with minimum length of 8 feet shall be installed at all equipment locations and at all accessible cable joints/splices and taps.

36.2. All pad-mounted equipment enclosures, including transformers, shall be grounded in such a manner that two separate grounding paths exist between the enclosure and the grounding rod(s).

37. INSTALLED CABLE AND ACCEPTANCE TESTS

37.1. Continuity: After installation of the cable, authorized personnel shall perform a simple continuity test on the system. This can easily be accomplished by grounding the conductor at the source and checking for continuity from the end of each tap with an ohmmeter or with a battery and ammeter.

37.2. HiPot Test: In addition to continuity tests, contractors shall perform HiPot test on all cable.

37.3. WARNING: A hazardous voltage may exist on the cable; therefore, before handling the cable, the conductor shall be grounded to permit any charge to drain to earth.

38. PLACEMENT OF SURGE ARRESTERS

38.1. The arrester connection on a riser pole shall have the grounding conductor going from system neutral to the pole ground to surge arrester ground then to cable neutral/ground.

38.2. The combination of both the line lead length and ground lead length shall be less than 3 feet. The higher margin of protection on the underground cable system is reached when the riser type class arresters are used at each overhead riser pole cable termination.

38.3. Also, by the placement of a distribution class arresters at open points on the cable system to help limit the transient voltage reflection peaks.

38.4. NOTE: a higher surge arrester MCOV rating should be selected for both open and mid-point arresters on the underground cables system as compared to the MCOV rating of the overhead riser pole arrester.

SECTION IV

GREENVILLE UTILITIES COMMISSION

TECHNICAL SPECIFICATIONS-MATERIALS SPECIFICATIONS

DECEMBER 1, 2026

1. SCOPE

All hardware, conductors, and insulators needed to complete each structure will be replaced. Greenville Utilities Commission will furnish all distribution and transmission materials required for the construction unless otherwise noted in this specification. The proposal submitted by the contractor shall include all labor, equipment, and all other necessary items to complete this project. Steel poles are expected to be delivered mid-December 2026.

2. GENERAL

2.1. All materials shall be new, except items specified for reuse, and will be furnished by the Commission and the Contractor as outlined in this specification.

2.2. All materials issued to the Contractor must be acknowledged by a material receipt.

2.3. Materials removed and salvaged must be returned to the Commission's warehouse and a receipt will be issued to the Contractor for materials returned.

2.4. The Contractor will be charged for all materials removed which are neither reused nor returned to the Commission's warehouse. Current stock item prices will be used to determine the removed material charge.

2.5. A brief description of the materials is furnished hereinafter for the Contractor's information.

2.6. Reference to ASTM, NEMA, AWS, SSPC, or ACI Standard implies reference to the latest revision or to its replacement if it has been discontinued.

3. POLES-WOOD - *Furnished by Owner*

3.1. All poles shall meet the requirements of ANSI Standard "Specifications and Dimensions for Wood Poles 05.1," the latest revision thereof.

3.2. Poles shall be framed as indicated on the Drawings. All holes shall be field drilled and treated with a two percent (2%) solution of Copper Napthenate or other EPA approved preservative before framing.

3.3. New poles shall be Southern Yellow Pine or Douglas Fir and shall meet the requirements set forth in ANSI Specification and Dimensions for Wood Poles 05.1. Treatment shall be AWPA Standard C4 for the Preservative Treatment of Poles by Waterborne Process. The preservative shall be Chromated Copper Arsenate, CCA, conforming to AWPA Specification P5, or the latest revisions thereof.

4. POLES-TUBULAR STEEL - *Furnished by Owner*

4.1. All poles will meet the requirements of the Steel Structures Specifications pertaining to this project.

4.2. The contractor will be responsible for field drilling any other holes required for construction. Cost for drilling these holes shall be part of the pole top assembly unit. In no instance will additional charges be paid for drilling holes. The Contractor shall touch up the finish of all field drilled holes using high zinc content paint (Galvon) supplied by the pole manufacturer.

4.3. Poles may be delivered in two (2) or three (3) pieces. The Contractor is responsible for all field assembly required for these poles. Additionally, the Contractor is responsible for providing any equipment (i.e., jacks) required to join pieces.

4.4. Any unused holes are to be plugged and sealed using galvanized steel plugs or caulk and plastic plugs.

5. HARDWARE - *Furnished by Owner*

5.1. Hardware shall be hot dip galvanized.

5.2. Bolts and nuts shall conform to ANSI Standards as follows:
- 5.2.1. C135.1 for machine, carriage, and double-arming bolts
- 5.2.2. C135.4 for eye bolts
- 5.2.3. Cl35.3 for lag screws

5.3. Steel parts shall conform to ASTM Specifications A36.

5.4. Malleable iron shall conform to ASTM Specifications A47.

5.5. Galvanizing shall conform to ASTM Specifications A153.

6. GUY WIRE - *Furnished by Owner*

6.1. Guy wire shall be 3/8" High Strength Steel rated 10,800 pounds ultimate strength and supplied by the Owner.

7. OVERHEAD GROUND WIRE - *Furnished by Owner*

7.1. A 7 No. 9 Alumoweld overhead ground wire shall be installed.

8. ANCHORS - *Furnished by Owner*

8.1. Distribution anchors shall be a no wrench 96" long with a single 10" helix. Anchors have a tripleye and are rated 10,000 lbs. in Class 6 soil.

8.2. Transmission anchors shall be double helix (8" and 10"), with one and one-half inch (1- 1/2") square shaft rod and a twin eye, rated 23,000 lbs. in Class 6 soil. Combined with a twelve-inch (12") Helix-extension, the anchor is rated at 32,000 lbs. in Class 6 soil.

8.3. The anchors shall be installed per the manufacturer's recommendations.

8.4. The ultimate holding capacity of distribution anchors is dependent upon the soil properties. Holding capacity for Class 6 soil is 10,000 lbs.

8.5. The ultimate holding capacity of the transmission anchors is dependent upon the soil properties. Holding capacity for Class 6 soil is 23,000 lbs. (32,000 lbs. when combined with a twelve-inch (12") Helix-extension).

8.6. The holding capacity of the anchors is dependent upon the torque values achieved while setting the anchors. Additionally, it will be necessary for the eye of the anchor to be installed a specific distance out of the ground in accordance with the construction drawings.

8.7. In order for the Contractor to meet the specification criteria for both torque and depth, it may be necessary to use multiple shaft length extensions in increments of three and one- half feet (3'-6"), and six feet (6'-0").

9. INSULATORS - *Furnished by Owner*

9.1. <u>Distribution Suspension</u>

9.1.1. Insulators shall be polymer and shall conform to ANSI, IEEE, ASTM, and AEIC Standards for insulators. All suspension insulators shall be gray.

Insulator Type	Flashover (kV)		Leakage (in.)	Suggested Manufacturer	Catalog Number
	Dry	Wet			
Polymer Suspension	155	135	31	Ohio Brass	4010250215

9.1.2. Suspension insulators shall be attached via shoulder eye through bolts, or guy plates.

9.2. Distribution Horizontal Post

9.2.1. Porcelain 15 kV Pin insulators shall be Porcelain products or equivalent.

Insulator Type	Flashover (kV)		Leakage (in.)	Suggested Manufacturer	Catalog Number
	Dry	Wet			
Porcelain 15 kV Pin	55	30	7	Porcelain Products	263-S

9.2.2. Mechanical strength 2500 lbs, design cantilever load.

9.3. Transmission Suspension

9.3.1. Insulators shall be polymer and shall conform to ANSI, IEEE, ASTM, and AEIC Standards for insulators. All suspension insulators shall be gray.

9.3.2.

Insulator Type	Flashover (kV)	Leakage (in.)	Suggested Manufacturer	Catalog Number

Insulator Type	Flashover (kV) Dry	Flashover (kV) Wet	Leakage (in.)	Suggested Manufacturer	Catalog Number
Polymer Suspension	402	362	119.0	MacLean	S54080038-MXSS019

9.3.3. Suspension insulators shall be attached via shoulder eye through bolts, transmission guy plates, or pre-manufactured vangs built into the steel pole.

9.4. Transmission Horizontal Post

9.4.1. Polymer horizontal mounting line post insulators for 115 kV shall be Ohio Brass or NGK Locke for steel pole mounting.

9.4.2.

Insulator Type	Flashover (kV) Dry	Flashover (kV) Wet	Leakage (in.)	Suggested Manufacturer	Catalog Number
Polymer Horizontal Post	455	405	113.0	Ohio Brass	P250043-S0070

9.4.3. Mechanical strength 7.2 kN, design cantilever load.

10. FIBERGLASS STRAIN INSULATOR - *Furnished by Owner*

10.1. Fiberglass strain insulator for use in guys shall have an ultimate strength of 16,000 pounds; shall have an insulating distance of thirty-six inches (36") and shall be equipped with clevis ends and the number of rollers required.

11. CONNECTORS AND SPLICES - *Furnished by Owner*

11.1. All connectors and splices for 1272 AAC, 795 AAC, 556 ACSR, 336 ACSR, 1/0 ACSR, and 7 No. 9 Alumoweld OHGW conductors shall be the compression type. Full tension compression splices shall develop strength equal to not less than ninety-five percent (95%) of the ASTM rated strength of the conductor. See Material List and Cross Reference pages provided by Greenville Utilities Commission for preferred manufacturer and catalog numbers.

12. ARMOR RODS - *Furnished by Owner*

12.1. Where armor rods are installed on phase conductors or OHGW, they shall be of a type specifically designed for the conductor being protected and shall be manufactured with aluminum alloy, aluminized acceptable. Armor rods shall be installed with the midpoint within two inches (2") of the center of the suspension clamp. The maximum distance between the ends of any two (2) individual rods within a bundle shall not exceed one-half inch (1/2").

13. CONDUCTOR CLAMPS - *Furnished by Owner*

13.1. Trunnion Clamps and Suspension Clamps

13.1.1. Suspension clamps and connecting pieces, material items on tangent and light/medium angle type pole top assemblies for 1272 AAC, 795 AAC, 556 ACSR, 336 ACSR, 1/0 ACSR, and 7 No. 9 Alumoweld OHGW conductors shall be sized to fit conductor with Armor Rod as manufactured by Preformed or approved equal. See Material List and Cross Reference pages provided by Greenville Utilities Commission for preferred manufacturer and catalog numbers.

13.2. Cushion Grip Supports

13.2.1. Cushion grip supports on tangent and light/medium angle type pole top assemblies shall be sized to fit 1272 AAC, 795 AAC, 556 ACSR, 336 ACSR, 1/0 ACSR, and 7 No. 9 Alumoweld OHGW conductors. See Material List and Cross Reference pages provided by Greenville Utilities Commission for preferred manufacturer and catalog numbers.

14. DEADENDS - *Furnished by Owner*

14.1. Deadends for 1272 AAC, 795 AAC, 556 ACSR, 336 ACSR, 1/0 ACSR, and 7 No. 9 Alumoweld OHGW conductors may be bolted, quadrant type or full compression. See Material List and Cross Reference pages provided by Greenville Utilities Commission for preferred manufacturer and catalog numbers.

15. GROUNDING - *Furnished by Owner*

15.1. All poles shall have driven grounds as indicated on the Drawings. Guys and overhead ground wire shall be attached to the common ground.

15.2. Ground rods shall be 5/8” x 8’ and 5/8” x 12’ copper. Extensions shall be added if necessary, to obtain a verifiable ground resistance of 25 ohms or less. Ground rods shall be installed at the direction of the Engineer. Threaded ground rod couplings shall be used to secure each ground rod section as it is installed.

15.3. Ground wire for poles shall be No. 4 AWG soft drawn tinned copper wire unless otherwise specified.

16. STATIC GROUND BRACKETS *(Not Applicable to this Project)*

16.1. The ground wire cable supports shall be Hughes Brothers 2855 series or approved equal for tangent and light angle structures.

17. CONDUCTOR - *Furnished by Owner*

17.1. Overhead conductor for the distribution line is 336 ACSR with 1/0 ACSR neutral for the corridor along Evans Rd. from E. Fire Tower Rd to Greenville Blvd. Primary taps along this route will be 1/0 ACSR with 1/0 neutral.

17.2. Triple circuit distribution from railroad crossing to Evans Rd and Greenville Blvd intersection will consist of 336 ACSR with 336 ACSR neutral conductors. Aerial fiber will be transferred along this corridor.

17.3. Transmission circuit along E. Fire Tower will be 1272 AAC with under build distribution circuits being 795 AAC and 336 ACSR neutral. Transmission conductors will be transferred from existing structure #60 to proposed structure #59 and from existing structure #43 to proposed structure #44. Transmission conductors between structure #59 and structure #44 will be new installations. New distribution conductors will be pulled through from pull point to pull point, as noted on Drawings. New distribution cross arms will be installed and holes field drilled on structure #43.

17.4. Overhead Service conductors consist of 4/0, 2/0, 1/0, #2, and #6 triplex and 4/0 quadruplex.

18. OWNER–FURNISHED MATERIAL STANDARDS - *Furnished by Owner*

18.1. The successful bidder will be provided a list of Owner-furnished material pages as a "Standard" for reference. The Commission may substitute other manufacturer's products of equal or better quality.

Appendix A: Detail Construction Drawings

[Balance of Page Left Blank Intentionally]

LEGEND

- INSTALL (RED)
- REMOVE (GREEN)
- EXISTING TO REMAIN (BLUE)
- ABANDON (ORANGE)
- TEMPORARY (YELLOW)
- PERMANENT UTILITIES EASEMENT
- AERIAL UTILITIES EASEMENT

DETAIL CONSTRUCTION DRAWING	PIKE ENGINEERING
Site Contact: James Richardson	Phone Number: (919) 612-9716
Site Contact:	Phone Number:
GUC Contact: Doug Boone	Phone Number: (252) 364-9271
GUC Contact: Jeff Williams(Tues.-Fri.)	Phone Number: (252) 378-6224
Address: U-2817 Evans St	Scale: 1" = 50'
	Sheet #: 12

PIKE ENGINEERING
4721 HARGROVE ROAD
RALEIGH, NC 27616
LICENSURE #: F-1217

ISSUED FOR CONSTRUCTION

VERIFY PHASING AT TIME OF CONSTRUCTION. PHASING ON PRINT IS BASED ON RECORDS.

PRELIMINARY DESIGN BASED ON 25% PLANS. THIS PRELIMINARY DESIGN IS SUBJECT TO CHANGE BASED ON RIGHT-OF-WAY ACQUISITION, SCOPE CHANGES, FINAL PLAN CHANGES, COORDINATION WITH OTHER UTILITIES, ETC.

NAD 83/NA 2011

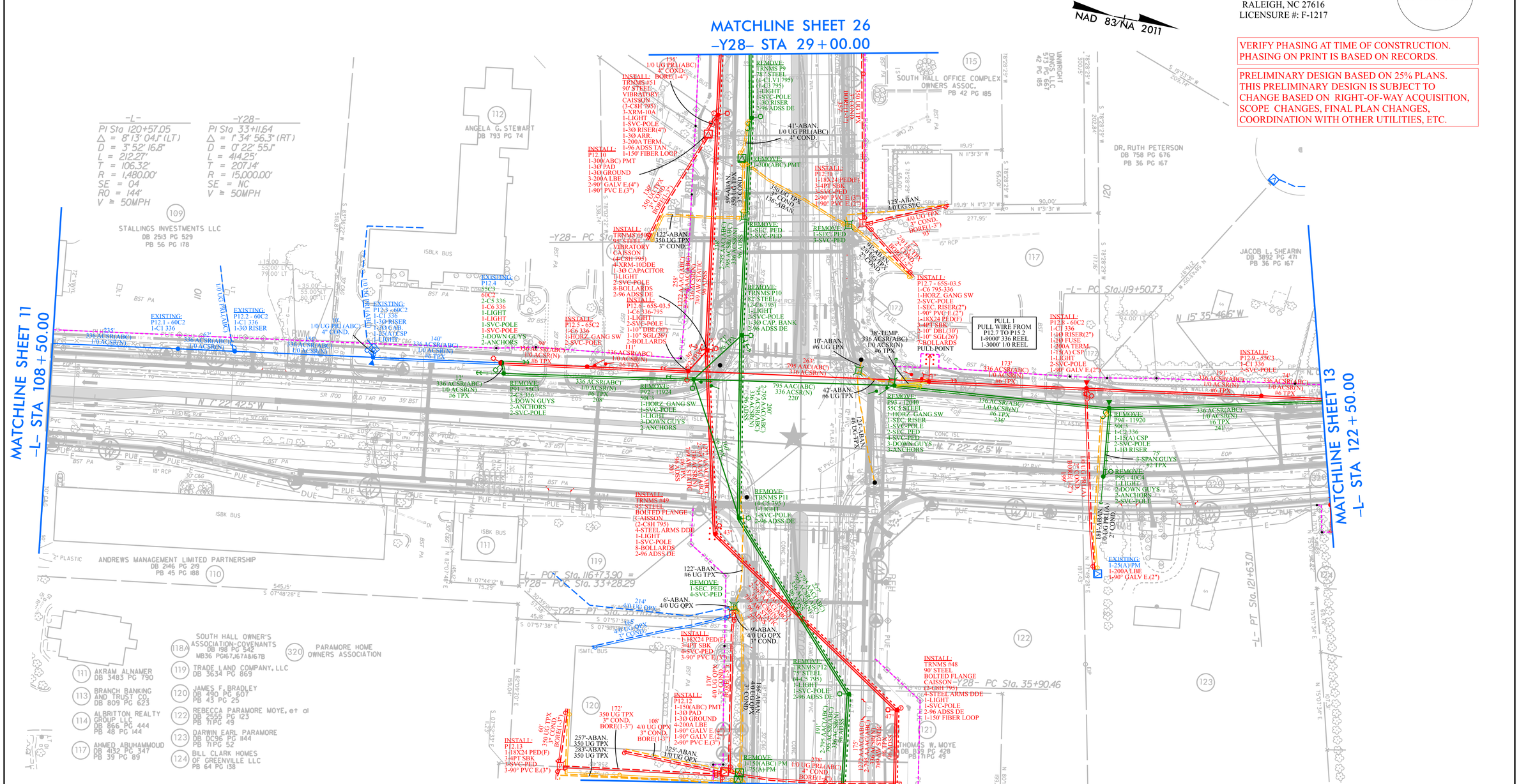
MATCHLINE SHEET 26
-Y28- STA 29+00.00
MATCHLINE SHEET 11
-L- STA 108+50.00
MATCHLINE SHEET 13
-L- STA 122+50.00
MATCHLINE SHEET 27
-Y28- STA 37+00.00
-L- PI Sta 120+57.05
Δ = 8° 13' 04.1" (LT)
D = 3° 52' 16.8"
L = 212.27'
T = 106.32'
R = 1,480.00'
SE = 04
RO = 144'
V = 50MPH
-Y28- PI Sta 33+11.64
Δ = 1° 34' 56.3" (RT)
D = 0° 22' 55.1"
L = 414.25'
T = 207.14'
R = 15,000.00'
SE = NC
V = 50MPH
-Y28- PC Sta 29+85.14
-L- PC Sta 119+50.73
-L- PT Sta 121+63.01
-L- POT Sta 116+73.90 = -Y28- PC Sta 33+28.29
-Y28- PT Sta 33+42.43
-Y28- PC Sta 35+90.46
N 15° 35' 46.6" W
N 7° 22' 42.5" W
SOUTH HALL OFFICE COMPLEX OWNERS ASSOC. PB 42 PG 185
DR. RUTH PETERSON DB 758 PG 676 PB 36 PG 167
JACOB L. SHEARIN DB 3892 PG 471 PB 36 PG 167
ANGELA G. STEWART DB 793 PG 74
STALLINGS INVESTMENTS LLC DB 2513 PG 529 PB 56 PG 178
ANDREWS MANAGEMENT LIMITED PARTNERSHIP DB 2146 PG 219 PB 45 PG 188
SOUTH HALL OWNER'S ASSOCIATION-COVENANTS DB 198 PG 542 MB36 PG167,167A&167B
PARAMORE HOME OWNERS ASSOCIATION
AKRAM ALNAMER DB 3483 PG 790
TRADE LAND COMPANY, LLC DB 3634 PG 869
BRANCH BANKING AND TRUST CO DB 809 PG 623
JAMES F. BRADLEY DB 490 PG 607 PB 43 PG 25
ALBRITTON REALTY GROUP, LLC DB 866 PG 444 PB 48 PG 144
REBECCA PARAMORE MOYE, et al DB 2555 PG 123 PB 71PG 49
AHMED ABUHAMMOUD DB 4132 PG 347 PB 39 PG 89
DARWIN EARL PARAMORE DB DC96 PG 1144 PB 71PG 52
BILL CLARK HOMES OF GREENVILLE LLC PB 64 PG 138
THOMAS W. MOYE DB 3879 PG 428 PB 71PG 49
PULL 1 PULL WIRE FROM P12.7 TO P15.2 1-9000' 336 REEL 1-3000' 1/0 REEL
PULL POINT
REMOVE: TRNMS #51 90' STEEL VIBRATORY CAISSON (3-C8H 795) 3-XRM-10A 1-LIGHT 1-SVC-POLE 1-30 RISER 2-96 ADSS DE
INSTALL: TRNMS #51 90' STEEL VIBRATORY CAISSON (3-C8H 795) 4-XRM-10DE 1-30 CAPACITOR 1-LIGHT 2-SVC-POLE 8-BOLLARDS 2-96 ADSS DE
INSTALL: TRNMS #49 95' STEEL BOLTED FLANGE CAISSON (2-C8H 795) 4-STEEL ARMS DDE 1-LIGHT 1-SVC-POLE 8-BOLLARDS 2-96 ADSS DE
INSTALL: TRNMS #52 95' STEEL VIBRATORY CAISSON (4-C8H 795) 4-XRM-10DE 1-30 CAPACITOR 1-LIGHT 2-SVC-POLE 8-BOLLARDS 2-96 ADSS DE
INSTALL: TRNMS #50 75' STEEL (4-C5 795) 1-LIGHT 1-SVC-POLE 8-BOLLARDS 2-96 ADSS DE
INSTALL: TRNMS #48 90' STEEL BOLTED FLANGE CAISSON (4-C8H 795) 4-STEEL ARMS DDE 1-LIGHT 1-SVC-POLE 2-96 ADSS DE 1-150' FIBER LOOP
REMOVE: TRNMS P9 82' STEEL (4-C1 V1795) (4-C1 795) 1-LIGHT 1-SVC-POLE 1-30 RISER 2-96 ADSS DE
REMOVE: TRNMS P10 82' STEEL (2-C6 795) 1-LIGHT 2-SVC-POLE 1-30 CAP. BANK 2-96 ADSS DE
REMOVE: TRNMS P11 (4-C5 795) 1-LIGHT 1-SVC-POLE 2-96 ADSS DE
REMOVE: TRNMS P12 75' STEEL (4-C5 795) 1-LIGHT 1-SVC-POLE 2-96 ADSS DE
REMOVE: P93 - 11924 50C3 1-HORZ. GANG SW. 1-SVC-POLE 1-LIGHT 3-DOWN GUYS 3-ANCHORS
REMOVE: P93 - 12040 55C3 STEEL 1-HORZ. GANG SW 1-SEC. RISER 1-SVC-POLE 2-SEC. PED 4-SVC-PED 3-DOWN GUYS 3-ANCHORS
REMOVE: P95 - 11920 50C3 1-C2 336 1-18(A) CSP 2-SVC-POLE 1-10 RISER 3-SPAN GUYS #2 TPX
REMOVE: P95 - 40C4 1-LIGHT 2-DOWN GUYS 2-ANCHORS 2-SVC-POLE
REMOVE: 1-SEC. PED 2-SVC-PED
REMOVE: 1-SEC. PED 3-SVC-PED
REMOVE: 1-SEC. PED 4-SVC-PED
REMOVE: 1-150(ABC) PM 1-75(A) PM
INSTALL: P12.7 - 65S-03.5 1-C6 795-336 1-HORZ. GANG SW 2-SVC-POLE 1-SEC. RISER(2") 1-90° PVC E.(2") 1-18X24 PED(F) 3-IPT SBK 2-10" DBL(30') 2-10" SGL(26') 7-BOLLARDS
INSTALL: P12.8 - 65S-03.5 1-C6 336-795 1-LIGHT 2-SVC-POLE 1-10" DBL(30') 1-10" SGL(26') 2-BOLLARDS
INSTALL: P12.5 - 65C2 1-C6 336 1-HORZ. GANG SW 2-SVC-POLE
INSTALL: P12.12 1-150(ABC) PMT 1-30 PAD 1-30 GROUND 4-200A LBE 1-90° GALV E.(4") 1-90° GALV E.(2") 2-90° PVC E.(3")
INSTALL: P12.13 1-18X24 PED(F) 3-IPT SBK 1-SVC-PED 3-90° PVC E.(3")
INSTALL: P12.10 1-30(ABC) PMT 1-30 PAD 1-30 GROUND 1-200A LBE 2-90° GALV E.(4") 1-90° PVC E.(3")
INSTALL: P12.9 - 55C3 1-C1 336 2-SVC-POLE
INSTALL: P12.8 - 60C2 1-CT 336 1-10 RISER(2") 1-10 FUSE 1-200A TERM. 1-18(A) CSP 1-LIGHT 2-SVC-POLE 1-90° GALV E.(2")
INSTALL: P12.7 - 55S-03.5 1-C6 795-336 1-HORZ. GANG SW 2-SVC-POLE 1-SEC. RISER(2") 1-90° PVC E.(2") 1-18X24 PED(F) 3-IPT SBK 2-10" DBL(30') 2-10" SGL(26') 7-BOLLARDS
EXISTING: P12.1 - 60C2 1-C1 336
EXISTING: P12.2 - 60C2 1-C1 336 1-30 RISER
EXISTING: P12.3 - 60C2 1-C1 336 1-30 RISER 1-30 CAP. 1-25(A) CSP 1-LIGHT
EXISTING: P12.4 55C3 60C2 2-C5 336 1-C6 336 1-LIGHT 1-LIGHT 1-SVC-POLE 1-SVC-POLE 3-DOWN GUYS 2-ANCHORS
EXISTING: 1-25(A)PM 1-200A LBE 1-90° GALV E.(2")
1/0 UG PRI.(ABC) 4" COND.
336 ACSR(ABC) 1/0 ACSR(N) #6 TPX
795 AAC(ABC) 336 ACSR(N)
41'-ABAN. 1/0 UG PRI.(ABC) 4" COND.
50'-ABAN. 350 UG TPX 3" COND.
122'-ABAN. 350 UG TPX 3" COND.
129'-ABAN. 4/0 UG SEC.
91'-ABAN. 2/0 UG PRI. 3" COND.
6'-ABAN. 4/0 UG QPX
9'-ABAN. 4/0 UG QPX 2" COND.
10'-ABAN. #6 UG TPX
42'-ABAN. #6 UG TPX
122'-ABAN. #6 UG TPX
38'-TEMP. 336 ACSR(ABC) 1/0 ACSR(N) #6 TPX
263' 795 AAC(ABC) 336 ACSR(N)
220'
200'
214'
172'
108'
257'-ABAN. 350 UG TPX
283'-ABAN. 350 UG TPX
125'-ABAN. 1/0 UG QPX
175'
173'
191'
241'
247'
ISBK BUS
ISMTL BUS
ISBLK BUS
BST PA
EOP
EOT
SR 1700
OLD TAR RD
35' BST
18" RCP
15" RCP
2" PLASTIC
8" PVC
12" PVC
24" PVC
30" C&G
CONC ISL
N 07°44'12" W 75.29'
S 07°48'28" E 545.15'
S 07°57'38" E 45.18'
S 07°57'38" E 51.38'
S 07°57'38" E 30.00'
S 18°28'29" W 202.84'
S 18°28'29" W 197.45'
S 18°28'29" W 119.49'
S 18°28'29" W 90.00'
S 18°28'29" W 277.95'
S 18°28'29" W 300.05'
N 11°31'31" W 119.19'
N 11°31'31" W 90.00'
S 19°33'31" W 208.74'
N 75°01'34" E 197.45'
N 75°01'34" E 197.45'
N 75°01'34" E 197.45

LEGEND

- INSTALL (RED)
- REMOVE (GREEN)
- EXISTING TO REMAIN (BLUE)
- ABANDON (ORANGE)
- TEMPORARY (YELLOW)
- PERMANENT UTILITIES EASEMENT
- AERIAL UTILITIES EASEMENT

DETAIL CONSTRUCTION DRAWING	PIKE ENGINEERING
Site Contact: James Richardson	Phone Number: (919) 612-9716
Site Contact:	Phone Number:
GUC Contact: Doug Boone	Phone Number: (252) 364-9271
GUC Contact: Jeff Williams(Tues.-Fri.)	Phone Number: (252) 378-6224
Address: U-2817 Evans St	Scale: 1" = 50'
	Sheet #: 13

PIKE ENGINEERING
4721 HARGROVE ROAD
RALEIGH, NC 27616
LICENSURE #: F-1217

ISSUED FOR CONSTRUCTION

VERIFY PHASING AT TIME OF CONSTRUCTION. PHASING ON PRINT IS BASED ON RECORDS.

PRELIMINARY DESIGN BASED ON 25% PLANS. THIS PRELIMINARY DESIGN IS SUBJECT TO CHANGE BASED ON RIGHT-OF-WAY ACQUISITION, SCOPE CHANGES, FINAL PLAN CHANGES, COORDINATION WITH OTHER UTILITIES, ETC.

-Y34-
PI Sta 11+59.21
Δ = 17° 26' 46.1" (RT)
D = 11° 27' 33.0"
L = 152.25'
T = 76.72'
R = 500.00'
SE = EX

-Y35-
PI Sta 10+66.23
Δ = 12° 24' 49.7" (RT)
D = 19° 05' 54.9"
L = 65.00'
T = 32.63'
R = 300.00'
SE = EX

-Y39-
PI Sta 10+56.07
Δ = 9° 52' 27.8" (LT)
D = 12° 43' 56.6"
L = 77.55'
T = 38.87'
R = 450.00'
SE = EX

NAD 83/NA 2011

MATCHLINE SHEET 12
-L- STA 122+50.00

MATCHLINE SHEET 14
-L- STA 135+00.00

NO.	DATE	REVISION	BY	CK	APP
7	08-09-23	Received full set of updates on 08-09-23.	DSV		
6	07-24-23	Received signal pole locations on 07-24-23.	DSV		
5	05-25-23	Received updated hyd drn, ss, row, dsn files on 05-25-23.	DSV		
4	02-01-23	Full set of updates received on 02-01-23.	DSV		
3	01-06-23	Full set of updates received on 01-06-23.	DSV		
2	11-09-22	Full set of updates received on 11-09-22.	DSV		
1	08-26-22	Full set of updates received on 08-26-22.	DSV		
8	07-22-24	Full set of updates received on 07-22-24.	DSV		

LEGEND

- INSTALL (RED)
- REMOVE (GREEN)
- EXISTING TO REMAIN (BLUE)
- ABANDON (ORANGE)
- TEMPORARY (YELLOW)
- PERMANENT UTILITIES EASEMENT
- AERIAL UTILITIES EASEMENT

DETAIL CONSTRUCTION DRAWING	PIKE ENGINEERING
Site Contact: James Richardson	Phone Number: (919) 612-9716
Site Contact:	Phone Number:
GUC Contact: Doug Boone	Phone Number: (252) 364-9271
GUC Contact: Jeff Williams(Tues.-Fri.)	Phone Number: (252) 378-6224
Address: U-2817 Evans St	Scale: 1" = 50'
	Sheet #: 14

PIKE ENGINEERING
4721 HARGROVE ROAD
RALEIGH, NC 27616
LICENSURE #: F-1217

ISSUED FOR CONSTRUCTION

VERIFY PHASING AT TIME OF CONSTRUCTION. PHASING ON PRINT IS BASED ON RECORDS.

PRELIMINARY DESIGN BASED ON 25% PLANS. THIS PRELIMINARY DESIGN IS SUBJECT TO CHANGE BASED ON RIGHT-OF-WAY ACQUISITION, SCOPE CHANGES, FINAL PLAN CHANGES, COORDINATION WITH OTHER UTILITIES, ETC.

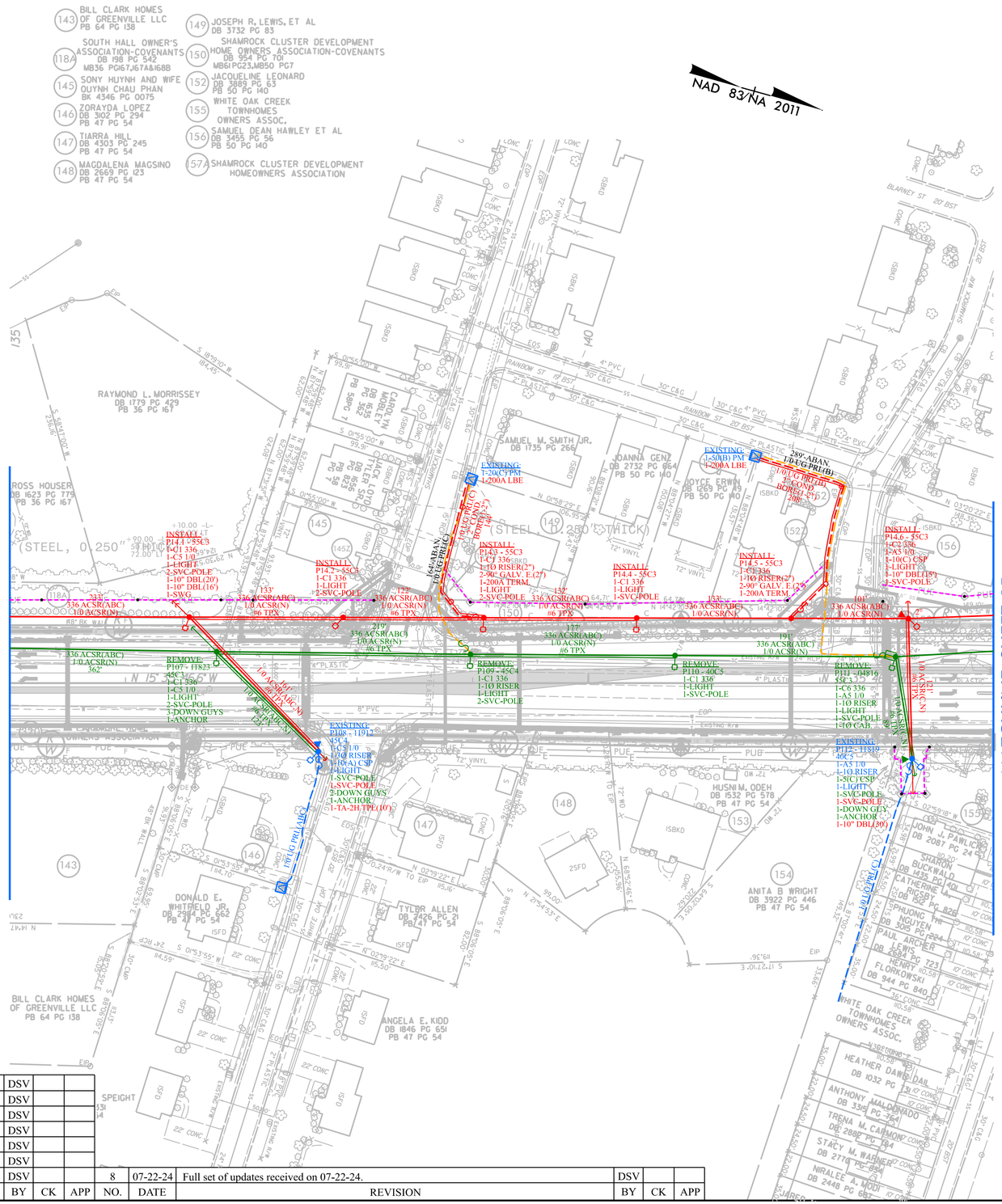
NAD 83/NA 2011
MATCHLINE SHEET 13
–L– STA 135+00.00
MATCHLINE SHEET 15
–L– STA 143+50.00
BILL CLARK HOMES OF GREENVILLE LLC PB 64 PG 138
SOUTH HALL OWNER'S ASSOCIATION-COVENANTS DB 198 PG 542 MB36 PG167,J67A&I68B
SONY HUYNH AND WIFE QUYNH CHAU PHAN BK 4346 PG 0075
ZORAYDA LOPEZ DB 3102 PG 294 PB 47 PG 54
TIARRA HILL DB 4303 PG 245 PB 47 PG 54
MAGDALENA MAGSINO DB 2669 PG 123 PB 47 PG 54
JOSEPH R, LEWIS, ET AL DB 3732 PG 83
SHAMROCK CLUSTER DEVELOPMENT HOME OWNERS ASSOCIATION-COVENANTS DB 954 PG 70(MB61PG23,MB50 PG7
JACQUELINE LEONARD DB 3889 PG 63 PB 50 PG 140
WHITE OAK CREEK TOWNHOMES OWNERS ASSOC.
SAMUEL DEAN HAWLEY ET AL DB 3455 PG 56 PB 50 PG 140
SHAMROCK CLUSTER DEVELOPMENT HOMEOWNERS ASSOCIATION
RAYMOND L. MORRISSEY DB 1779 PG 429 PB 36 PG 167
ROSS HOUSER DB 1623 PG 779 PB 36 PG 167
SAMUEL M. SMITH JR. DB 1735 PG 266
JOANNA GENZ DB 2732 PG 664 PB 50 PG 140
JOYCE ERWIN DB 1269 PG 49 PB 50 PG 140
HUSNIM. ODEH DB 1532 PG 578 PB 47 PG 54
ANITA B WRIGHT DB 3922 PG 446 PB 47 PG 54
DONALD E. WHITFIELD JR DB 2984 PG 662 PB 47 PG 54
TYLOR ALLEN DB 2426 PG 21 PB 47 PG 54
ANGELA E. KIDD DB 1846 PG 651 PB 47 PG 54
JOHN H. PAWLICKI DB 2087 PG 24
SHARON BUCKWALD DB 1435 PG 401
CATHERINE M. HENRY DB 1435 PG 826
PHUONG NGUYEN DB 3005 PG 1294
PAUL ARCHER DB 2684 PG 723
HENRY FLORKOWSKI DB 944 PG 840
WHITE OAK CREEK TOWNHOMES OWNERS ASSOC.
HEATHER DAWN DAIL DB 1032 PG
ANTHONY MALDONADO DB 3351 PG 564
TRENA M. CAMMON DB 2886 PG 394
STACY M. WARNER DB 2770 PG 894
NIRALEE A. MODI DB 2448 PG 682
(STEEL, 0.250" THICK)
INSTALL: P1.41 - 45C3 1-C1 336 1-C5 1/0 1-LIGHT 2-SVC-POLE 1-10" DBL(20') 1-10" DBL(16') 1-SWG
INSTALL: P14.2 - 55C3 1-C1 336 1-LIGHT 2-SVC-POLE
INSTALL: P143 - 55C3 1-C1 336 1-TO RISER(2") 2-90° GALV. E.(2") 1-200A TERM. 1-LIGHT 2-SVC-POLE
INSTALL: P14.4 - 55C3 1-C1 336 1-LIGHT 1-SVC-POLE
INSTALL: P14.5 - 55C3 1-C1 336 1-TO RISER(2") 2-90° GALV. E.(2") 1-200A TERM.
INSTALL: P14.6 - 55C3 1-C2 336 1-A5 1/0 1-10(C) CSP 1-LIGHT 1-10" DBL(15') 1-SVC-POLE
REMOVE: P107 - H823 45C3 1-C1 336 1-C5 1/0 1-LIGHT 2-SVC-POLE 3-DOWN GUYS 1-ANCHOR
REMOVE: P109 - 45C4 1-C1 336 1-TO RISER 1-LIGHT 2-SVC-POLE
REMOVE: P110 - 40C5 1-C1 336 1-LIGHT 1-SVC-POLE
REMOVE: P111 - 04816 55C3 1-C0 336 1-A5 1/0 1-TO RISER 1-LIGHT 1-SVC-POLE 1-TO CAB.
EXISTING: P112 - H819 40C5 1-A5 1/0 1-TO RISER 1-5(C) CSP 1-LIGHT 1-SVC-POLE 1-SVC-POLE 1-DOWN GUY 1-ANCHOR 1-10" DBL(30')
EXISTING: P108 - 11912 45C4 1-C5 1/0 1-TO RISER 1-10(A) CSP 1-LIGHT 1-SVC-POLE 1-SVC-POLE 2-DOWN GUYS 1-ANCHOR 1-TA-2H TPE(10')
EXISTING: T-200C PM 1-200A LBE
EXISTING: T-50(B) PM 1-200A LBE
289'-ABAN. 1-DUG PR(B)
336 ACSR(ABC) 1/0 ACSR(N) #6 TPX
1/0 ACSR(ABC)
336 ACSR(ABC) 1/0 ACSR(N)
4" PVC
30' C&G
20' BST
RAINBOW ST
SHAMROCK WAY
BLARNEY ST
EOS
EOP
EIP
PUE
ISBKD
CONC
DSWD
72' VINYL
4" PLASTIC
8" PVC
24" RCP
30" RCP
22' CONC
S 18°37'10" W 184.45'
S 58°47'00" W 258.46'
N 15°57'00" W 99.91'
S 01°55'00" W 99.91'
S 01°58'29" E 206.95'
N 02°19'22" E 115.46'
N 01°20'22" E 140.38'
S 17°21'10" E 119.36'
S 68°39'40" E 99.00'
S 21°53'10" W 114.59'
S 89°20'56" E 83.39'
S 89°20'56" E 83.39'
S 89°20'56" E 83.39

LEGEND

- INSTALL (RED)
- REMOVE (GREEN)
- EXISTING TO REMAIN (BLUE)
- ABANDON (ORANGE)
- TEMPORARY (YELLOW)
- PERMANENT UTILITIES EASEMENT
- AERIAL UTILITIES EASEMENT

DETAIL CONSTRUCTION DRAWING	PIKE ENGINEERING
Site Contact: James Richardson	Phone Number: (919) 612-9716
Site Contact:	Phone Number:
GUC Contact: Doug Boone	Phone Number: (252) 364-9271
GUC Contact: Jeff Williams(Tues.-Fri.)	Phone Number: (252) 378-6224
Address: U-2817 Evans St	Scale: 1" = 50'
	Sheet #: 15

PIKE ENGINEERING
4721 HARGROVE ROAD
RALEIGH, NC 27616
LICENSURE #: F-1217

ISSUED FOR CONSTRUCTION

VERIFY PHASING AT TIME OF CONSTRUCTION. PHASING ON PRINT IS BASED ON RECORDS.

PRELIMINARY DESIGN BASED ON 25% PLANS. THIS PRELIMINARY DESIGN IS SUBJECT TO CHANGE BASED ON RIGHT-OF-WAY ACQUISITION, SCOPE CHANGES, FINAL PLAN CHANGES, COORDINATION WITH OTHER UTILITIES, ETC.

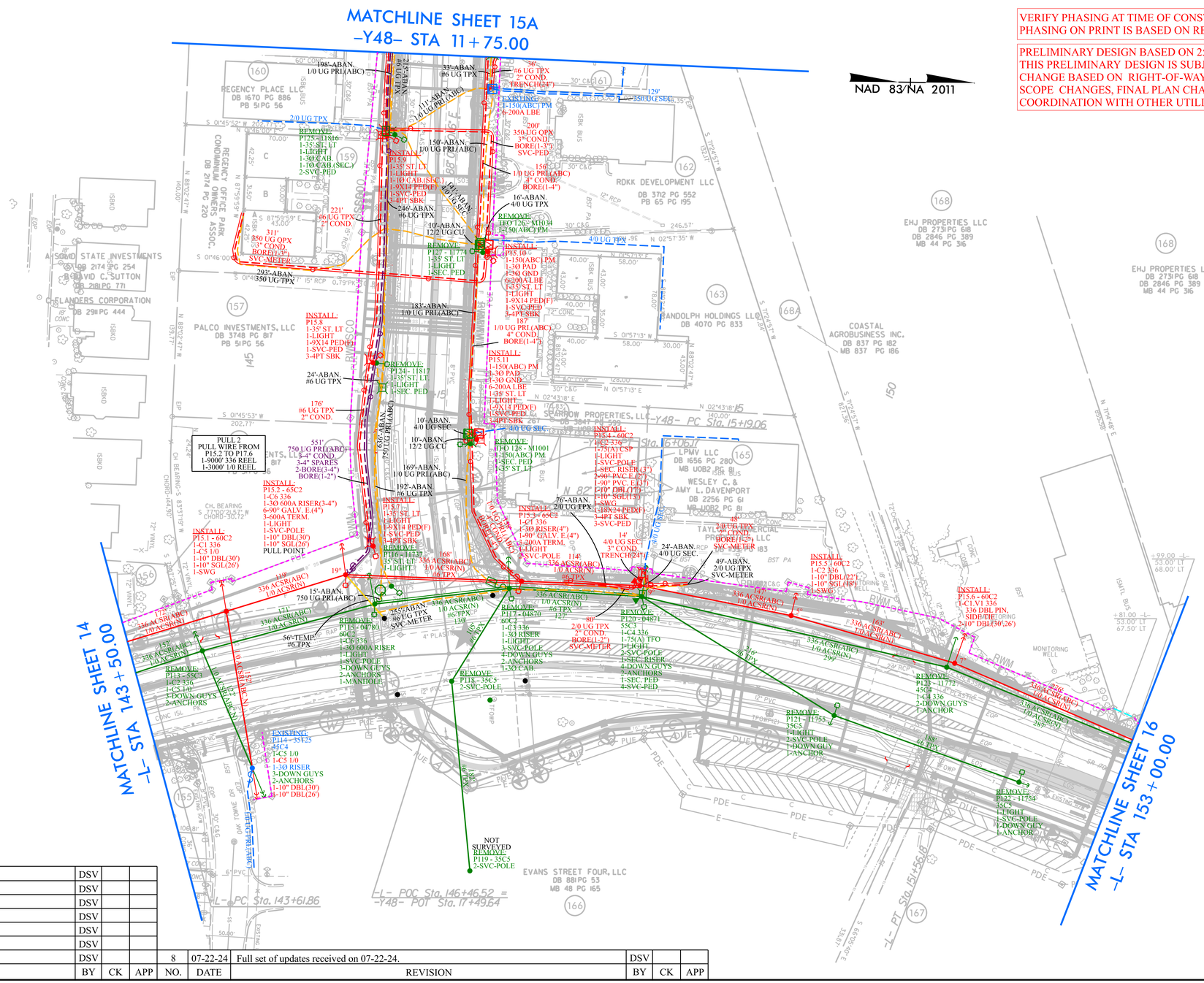

NO.	DATE	REVISION	BY	CK	APP
7	08-09-23	Received full set of updates on 08-09-23.	DSV		
6	07-24-23	Received signal pole locations on 07-24-23.	DSV		
5	05-25-23	Received updated hyd drn, ss, row, dsn files on 05-25-23.	DSV		
4	02-01-23	Full set of updates received on 02-01-23.	DSV		
3	01-06-23	Full set of updates received on 01-06-23.	DSV		
2	11-09-22	Full set of updates received on 11-09-22.	DSV		
1	08-26-22	Full set of updates received on 08-26-22.	DSV		
8	07-22-24	Full set of updates received on 07-22-24.	DSV		

LEGEND

- INSTALL (RED)
- REMOVE (GREEN)
- EXISTING TO REMAIN (BLUE)
- ABANDON (ORANGE)
- TEMPORARY (YELLOW)
- PERMANENT UTILITIES EASEMENT
- AERIAL UTILITIES EASEMENT

DETAIL CONSTRUCTION DRAWING	PIKE ENGINEERING
Site Contact: James Richardson	Phone Number: (919) 612-9716
Site Contact:	Phone Number:
GUC Contact: Doug Boone	Phone Number: (252) 364-9271
GUC Contact: Jeff Williams(Tues.-Fri.)	Phone Number: (252) 378-6224
Address: U-2817 Evans St	Scale: 1" = 50'
	Sheet #: 15A

PIKE ENGINEERING
4721 HARGROVE ROAD
RALEIGH, NC 27616
LICENSURE #: F-1217

ISSUED FOR CONSTRUCTION

VERIFY PHASING AT TIME OF CONSTRUCTION. PHASING ON PRINT IS BASED ON RECORDS.

PRELIMINARY DESIGN BASED ON 25% PLANS. THIS PRELIMINARY DESIGN IS SUBJECT TO CHANGE BASED ON RIGHT-OF-WAY ACQUISITION, SCOPE CHANGES, FINAL PLAN CHANGES, COORDINATION WITH OTHER UTILITIES, ETC.

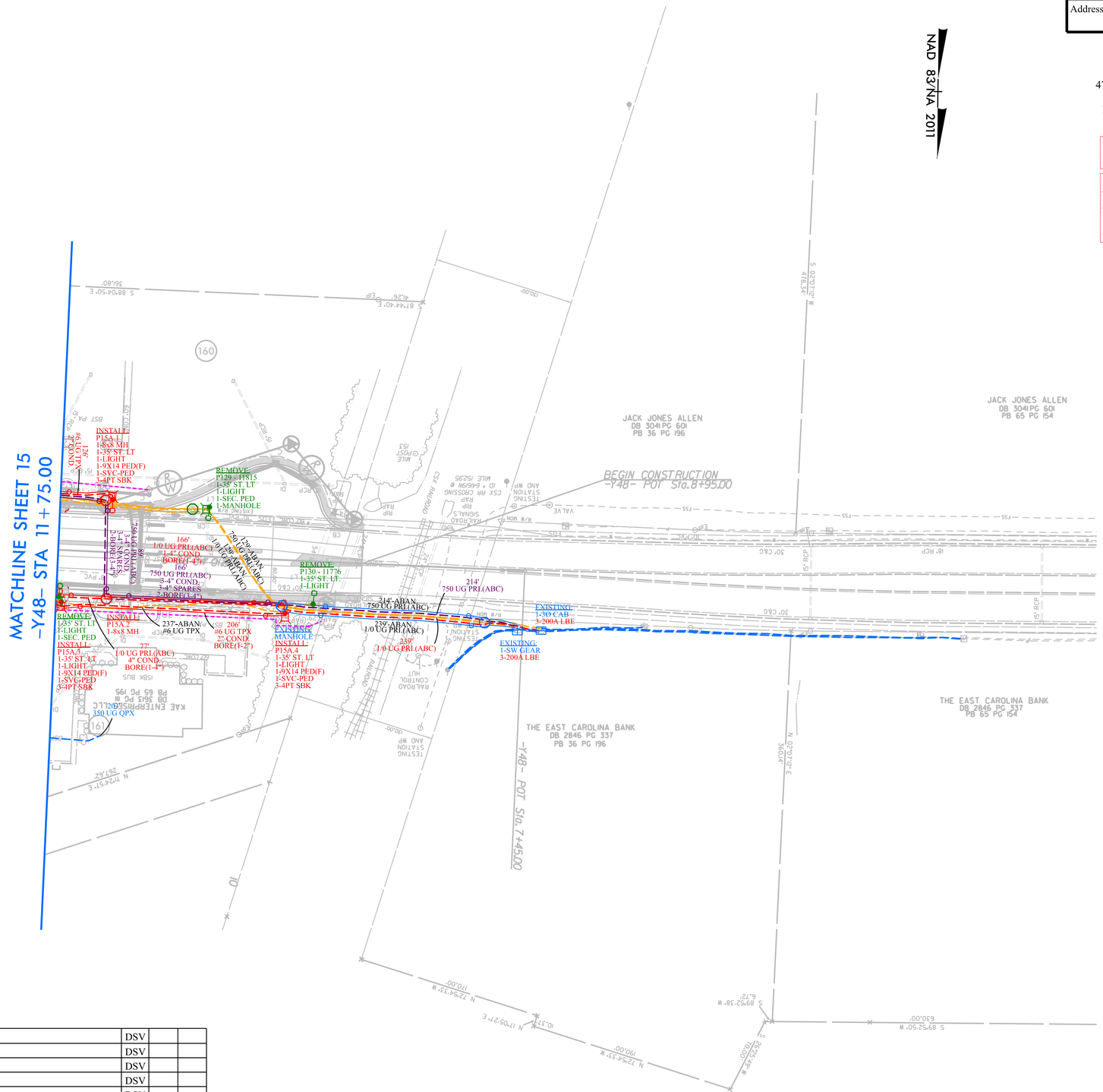

NO.	DATE	REVISION	BY	CK	APP
7	08-09-23	Received full set of updates on 08-09-23.	DSV		
6	07-24-23	Received signal pole locations on 07-24-23.	DSV		
5	05-25-23	Received updated hyd drn, ss, row, dsn files on 05-25-23.	DSV		
4	02-01-23	Full set of updates received on 02-01-23.	DSV		
3	01-06-23	Full set of updates received on 01-06-23.	DSV		
2	11-09-22	Full set of updates received on 11-09-22.	DSV		
1	08-26-22	Full set of updates received on 08-26-22.	DSV		
8	07-22-24	Full set of updates received on 07-22-24.	DSV		

LEGEND

- INSTALL (RED)
- REMOVE (GREEN)
- EXISTING TO REMAIN (BLUE)
- ABANDON (ORANGE)
- TEMPORARY (YELLOW)
- PERMANENT UTILITIES EASEMENT
- AERIAL UTILITIES EASEMENT

DETAIL CONSTRUCTION DRAWING	PIKE ENGINEERING
Site Contact: James Richardson	Phone Number: (919) 612-9716
Site Contact:	Phone Number:
GUC Contact: Doug Boone	Phone Number: (252) 364-9271
GUC Contact: Jeff Williams(Tues.-Fri.)	Phone Number: (252) 378-6224
Address: U-2817 Evans St	Scale: 1" = 50'
	Sheet #: 16

PIKE ENGINEERING
4721 HARGROVE ROAD
RALEIGH, NC 27616
LICENSURE #: F-1217

ISSUED FOR CONSTRUCTION

VERIFY PHASING AT TIME OF CONSTRUCTION. PHASING ON PRINT IS BASED ON RECORDS.

PRELIMINARY DESIGN BASED ON 25% PLANS. THIS PRELIMINARY DESIGN IS SUBJECT TO CHANGE BASED ON RIGHT-OF-WAY ACQUISITION, SCOPE CHANGES, FINAL PLAN CHANGES, COORDINATION WITH OTHER UTILITIES, ETC.

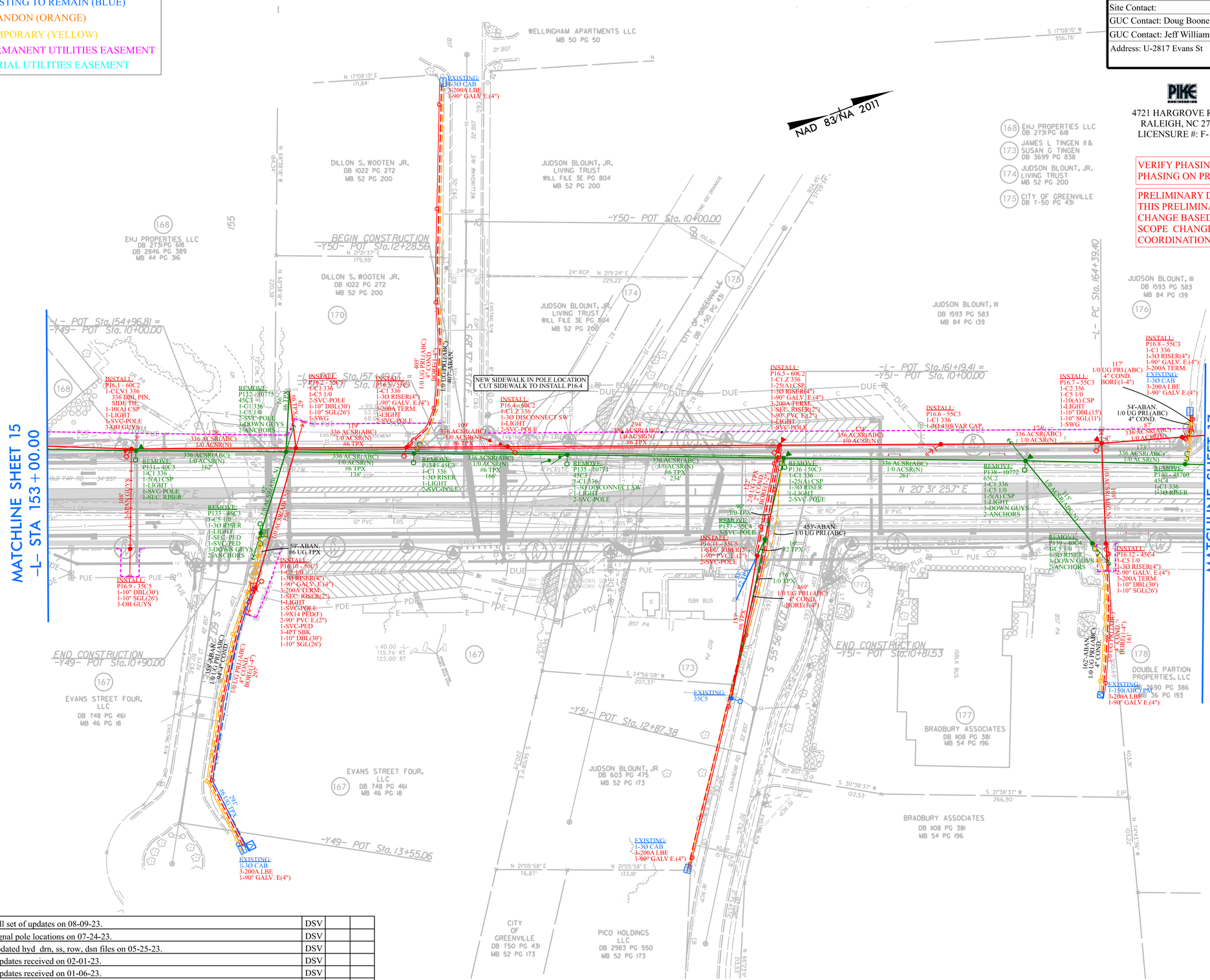

NO.	DATE	REVISION	BY	CK	APP
7	08-09-23	Received full set of updates on 08-09-23.	DSV		
6	07-24-23	Received signal pole locations on 07-24-23.	DSV		
5	05-25-23	Received updated hyd drn, ss, row, dsn files on 05-25-23.	DSV		
4	02-01-23	Full set of updates received on 02-01-23.	DSV		
3	01-06-23	Full set of updates received on 01-06-23.	DSV		
2	11-09-22	Full set of updates received on 11-09-22.	DSV		
1	08-26-22	Full set of updates received on 08-26-22.	DSV		
8	07-22-24	Full set of updates received on 07-22-24.	DSV		

LEGEND

- INSTALL (RED)
- REMOVE (GREEN)
- EXISTING TO REMAIN (BLUE)
- ABANDON (ORANGE)
- TEMPORARY (YELLOW)
- PERMANENT UTILITIES EASEMENT
- AERIAL UTILITIES EASEMENT

DETAIL CONSTRUCTION DRAWING	PIKE ENGINEERING
Site Contact: James Richardson	Phone Number: (919) 612-9716
Site Contact:	Phone Number:
GUC Contact: Doug Boone	Phone Number: (252) 364-9271
GUC Contact: Jeff Williams(Tues.-Fri.)	Phone Number: (252) 378-6224
Address: U-2817 Evans St	Scale: 1" = 50'
	Sheet #: 17

PIKE ENGINEERING
4721 HARGROVE ROAD
RALEIGH, NC 27616
LICENSURE #: F-1217

ISSUED FOR CONSTRUCTION

VERIFY PHASING AT TIME OF CONSTRUCTION. PHASING ON PRINT IS BASED ON RECORDS.

PRELIMINARY DESIGN BASED ON 25% PLANS. THIS PRELIMINARY DESIGN IS SUBJECT TO CHANGE BASED ON RIGHT-OF-WAY ACQUISITION, SCOPE CHANGES, FINAL PLAN CHANGES, COORDINATION WITH OTHER UTILITIES, ETC.

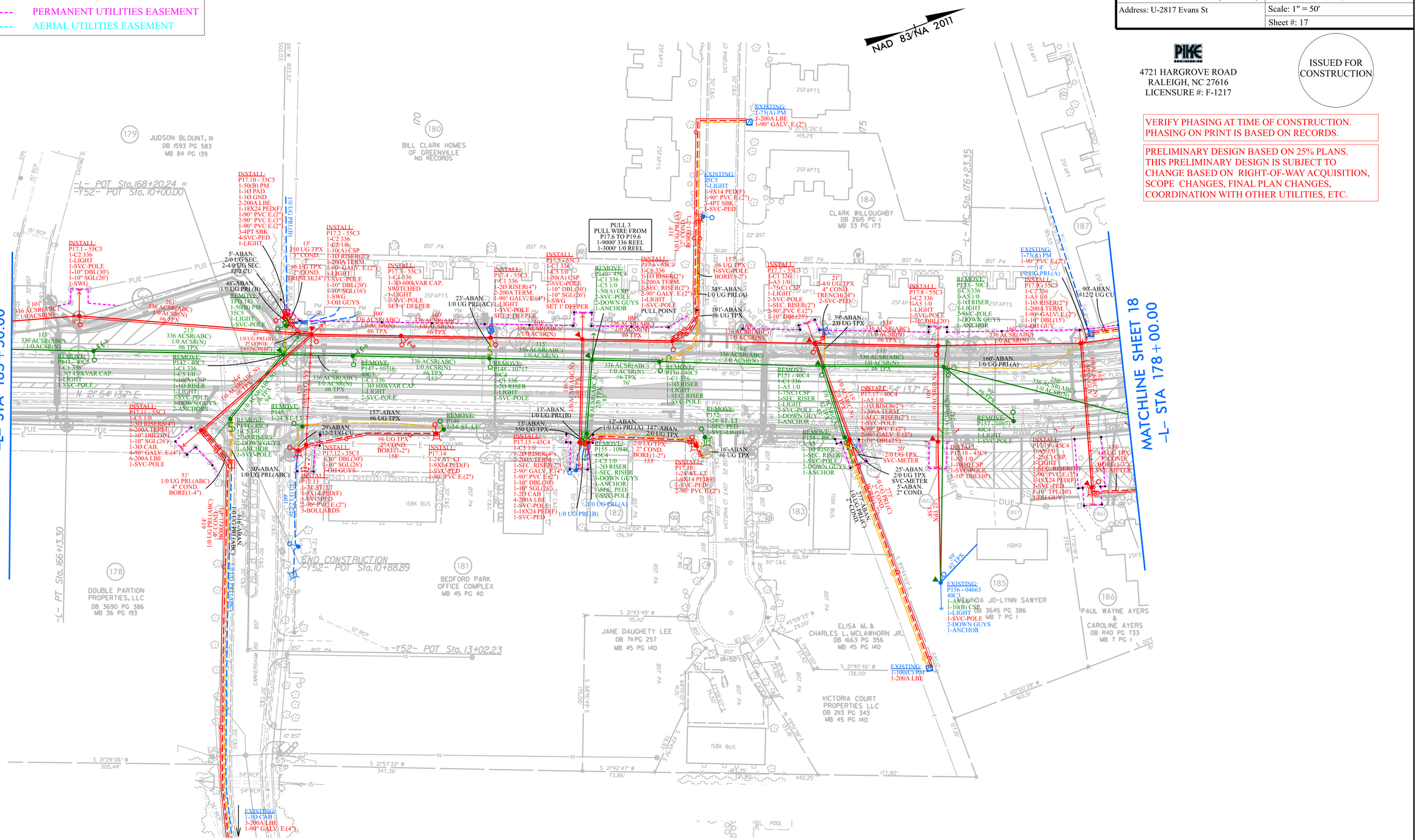
NAD 83/NA 2011
MATCHLINE SHEET 16
-L- STA 165+50.00
MATCHLINE SHEET 18
-L- STA 178+00.00
-L- PT Sta.166+13.30
-L- POT Sta.168+20.24 = -Y52- POT Sta.10+00.00
-L- PC Sta.176+23.35
-Y52- POT Sta.10+88.89
-Y52- POT Sta.13+02.23
END CONSTRUCTION
JUDSON BLOUNT, III DB 1593 PG 583 MB 84 PG 139
BILL CLARK HOMES OF GREENVILLE NO RECORDS
CLARK WILLOUGHBY DB 2615 PG 1 MB 33 PG 173
DOUBLE PARTION PROPERTIES, LLC DB 3690 PG 386 MB 36 PG 193
BEDFORD PARK OFFICE COMPLEX MB 45 PG 40
JANE DAUGHETY LEE DB 711 PG 257 MB 45 PG 140
ELISA M. & CHARLES L. MCLAWHORN JR. DB 1663 PG 356 MB 45 PG 140
VICTORIA COURT PROPERTIES LLC DB 213 PG 343 MB 45 PG 140
LINDA JO-LYNN SAWYER DB 3645 PG 386 MB 7 PG 1
PAUL WAYNE AYERS & CAROLINE AYERS DB R40 PG 733 MB 7 PG 1
PULL 3 PULL WIRE FROM P17.6 TO P19.6 1-9000' 336 REEL 1-3000' 1/0 REEL
PULL POINT
INSTALL: P17.1 - 55C5 1-C2 336 1-LIGHT 1-SVC-POLE 1-10" DBL(30') 1-10" SGL(26') 1-SWG
INSTALL: P17.10 - 35C5 1-50(B) PM 1-1O PAD 1-1O GND 2-200A LBE 1-18X24 PED(F) 1-90° PVC E.(2") 2-90° PVC E.(3") 1-90° PVC E.(2") 3-4PT SBK 4-SVC-PED 1-LIGHT
INSTALL: P17.12 - 35C5 1-C2 336 1-C5 1/0 1-10(A) CSP 1-TO RISER(2") 1-200A TERM. 1-90° GALV. E.(2") 1-LIGHT 1-SVC-POLE 1-10" DBL(20') 1-10" SGL(16') 1-SWG 3-OH GUYS
INSTALL: P17.2 - 55C3 1-C1 336 1-C5 1/0 1-50(A) CSP 2-SVC-POLE 2-DOWN GUYS 1-ANCHOR
INSTALL: P17.3 - 55C3 1-C1 336 1-3O 600KVAR CAP. 2-SVC-POLE SWITCHED 1-LIGHT
INSTALL: P17.4 - 55C3 1-C1 336 1-20 RISER(4") 2-200A TERM. 1-90° GALV. E.(4") 1-LIGHT 1-SVC-POLE SET 1' DEEPER
INSTALL: P17.5 - 55C3 1-C1 336 1-C5 1/0 1-50(A) CSP 2-SVC-POLE 1-10" DBL(30') 1-10" SGL(26') 1-SWG SET 1' DEEPER
INSTALL: P17.6 - 55C3 1-C6 336 1-10 RISER(2") 1-200A TERM. 1-SEC. RISER(2") 2-90° GALV. E.(2") 1-LIGHT 1-SVC-POLE
INSTALL: P17.7 - 55C3 1-C1 336 1-A5 1/0 1-75(C) CSP 1-LIGHT 2-SVC-POLE 1-10" DBL(25')
INSTALL: P17.8 - 55C3 1-C2 336 1-A5 1/0 1-10 RISER 1-LIGHT 2-SVC-POLE 3-DOWN GUYS 3-ANCHOR
INSTALL: P17.9 - 55C3 1-C2 336 1-A5 1/0 1-10 RISER(2") 1-200A TERM. 1-90° GALV. E.(2") 1-10" DBL(15') 1-OH GUY
INSTALL: P17.11 - 35C3 1-C5 1/0 2-30 RISERS(4") 6-200A TERM. 1-10" DBL(30') 1-30 CAB 4-90° GALV. E.(4") 6-200A LBE 1-SVC-POLE
INSTALL: P17.13 1-24' ST. LT 1-9X14 PED(F) 1-SVC-PED 2-90° PVC E.(2") 3-BOLLARDS
INSTALL: P17.14 1-24' ST. LT 1-9X14 PED(F) 1-SVC-PED 1-90° PVC E.(2")
INSTALL: P17.15 - 45C4 1-C5 1/0 5-20 RISER(4") 2-200A TERM. 1-SEC. RISER(2") 2-90° GALV. E.(4") 1-90° PVC E.(2") 1-10" DBL(30') 1-10" SGL(26') 1-20 CAB 4-200A LBE 1-SVC-POLE 1-18X24 PED(F) 1-SVC-PED
INSTALL: P17.16 1-24' ST. LT 1-9X14 PED(F) 1-SVC-PED 2-90° PVC E.(2")
INSTALL: P17.17 - 40C4 1-A5 1/0 1-10 RISER(2") 1-200A TERM. 1-SEC. RISER(2") 1-SVC-POLE 2-90° PVC E.(2") 1-10" DBL(25')
INSTALL: P17.18 - 45C4 1-A5 1/0 1-10(B) CSP 1-LIGHT 1-SEC. RISER(2") 2-90° PVC E.(3") 1-18X24 PED(F) 1-SVC-PED 1-10" TPL(20') 1-OH GUY
INSTALL: 1-75(A) PM 1-200A LBE 1-90° GALV. E.(2")
INSTALL: 1-75(A) PM 1-90° PVC E.(2") 1-1" 1/0 UG PRI.(A)
INSTALL: 35C5 1-LIGHT 1-9X14 PED(F) 1-90° PVC E.(2") 3-4PT SBK 1-SVC-PED
INSTALL: 1-C2 336 1-LIGHT 1-SVC-POLE 1-10" DBL(20') 1-OH GUY
INSTALL: 1-C1 336 1-LIGHT 1-SVC-POLE 1-10" DBL(25')
INSTALL: 1-C2 336 1-A5 1/0 1-LIGHT 1-SVC-POLE 1-10' DBL(20')
REMOVE: 1TO 1A3 1-50(B) PM 35C3 1-LIGHT 1-SVC-POLE
REMOVE: P141 - 40C5 1-C1 336 1-3O 450KVAR CAP. 1-LIGHT 1-SVC-POLE
REMOVE: P142 - 40C5 1-C1 336 1-C5 1/0 1-10(A) CSP 1-1O RISER 1-LIGHT 1-SVC-POLE 3-DOWN GUYS 2-ANCHORS
REMOVE: P144 - 45C5 1-C5 1/0 2-20 RISERS 2-DOWN GUYS 1-ANCHOR 1-SVC-POLE
REMOVE: P145 1-24' ST. LT
REMOVE: P146 1-24' ST. LT
REMOVE: P147 - 10716 40C5 1-C1 336 1-3O 600KVAR CAP. 1-LIGHT 2-SVC-POLE
REMOVE: P148 - 10717 40C4 1-C1 336 2-20 RISER 1-LIGHT 1-SVC-POLE
REMOVE: P149 - 45C4 1-C1 336 1-C5 1/0 2-SVC-POLE 2-DOWN GUYS 1-ANCHOR
REMOVE: P150 - 40C5 1-C1 336 1-10 RISER 1-LIGHT 1-SEC. RISER 1-SVC-POLE
REMOVE: P151 - 40C4 1-C1 336 1-A5 1/0 1-75(C) CSP 1-LIGHT 2-SVC-POLE 1-DOWN GUY 1-ANCHOR
REMOVE: P152 1-24' ST. LT 1-SEC. PED 1-SVC-LIGHT
REMOVE: P154 - 40C4 1-A5 1/0 1-10 RISER 1-SEC. RISER 1-SVC-POLE 2-DOWN GUYS 1-ANCHOR
REMOVE: P155 - 10946 45C4 1-C5 1/0 1-20 RISER 1-SEC. RISER 3-DOWN GUYS 1-ANCHOR 1-SEC. PED 1-SVC-POLE
REMOVE: P156 - 04663 40C3 1-A5 1/0 1-10(B) CSP 1-LIGHT 1-SVC-POLE 2-DOWN GUYS 1-ANCHOR
REMOVE: P157 - 10971 40C4 1-LIGHT 1-SVC-POLE
REMOVE: P158 - 10972 40C4 1-LIGHT 1-SVC-POLE
REMOVE: P159 - 50C3 1-C3 336 1-A5 1/0 1-10 RISER 1-LIGHT 2-SVC-POLE 3-DOWN GUYS 1-ANCHOR
REMOVE: P160 - 50C3 1-C3 336 1-A5 1/0 1-10 RISER 1-LIGHT 2-SVC-POLE 3-DOWN GUYS 1-ANCHOR
EXISTING: 1-75(A) PM 1-200A LBE 1-90° GALV. E.(2")
EXISTING: 35C5 1-LIGHT 1-9X14 PED(F) 1-90° PVC E.(2") 3-4PT SBK 1-SVC-PED
EXISTING: 1-75(A) PM 1-90° PVC E.(2") 1-1" 1/0 UG PRI.(A)
EXISTING: 1-30 CAB 3-200A LBE 1-90° GALV. E.(4")
EXISTING: P156 - 04663 40C3 1-A5 1/0 1-10(B) CSP 1-LIGHT 1-SVC-POLE 2-DOWN GUYS 1-ANCHOR
EXISTING: 1-100(C) PM 1-200A LBE
48'-ABAN. 1/0 UG PRI.(B)
5'-ABAN. 2/0 UG SEC. 2-4/0 UG SEC. 1/2/2 CU
23'-ABAN. 1/0 UG PRI.(AC)
29'-ABAN. 1/2/2 UG CU
50'-ABAN. 1/0 UG PRI.(ABC)
13'-ABAN. 350 UG TPX
13'-ABAN. 1/0 UG PRI.(B)
12'-ABAN. 1/0 UG PRI.(A)
147'-ABAN. 2/0 UG TPX
16'-ABAN. #6 UG TPX
157'-ABAN. #6 UG TPX
345'-ABAN. 1/0 UG PRI.(A)
191'-ABAN. #6 UG TPX
39'-ABAN. 2/0 UG TPX
90'-ABAN. #1/2/2 UG CU
160'-ABAN. 1/0 UG PRI.(A)
25'-ABAN. 2/0 UG TPX SVC-METER
5'-ABAN. 2" COND.
336 ACSR(ABC) 1/0 ACSR(N) #6 TPX
1/0 UG PRI.(ABC) 4" COND. BORE(1-4")
2/0 UG PRI.(ABC) 4" COND. BORE(1-4")
1/0 UG PRI.(B) 2" COND. TRENCH(24")
#6 UG TPX 2" COND. BORE(1-2")
#6 UG TPX 2" COND. TRENCH(24")
#6 UG TPX 2" COND. BORE(1-2")
#6 UG TPX 2" COND. BORE(1-2")
2/0 UG TPX 2" COND. BORE(1-2")
315' (0.1) 1/0 UG PRI.(AB) 2" COND. BORE(1-2")
#6 UG TPX SVC-METER
#6 UG TPX 1-SVC-POLE BORE(1-2")
#6 UG TPX 4" COND. TRENCH(24") 2-SVC-PED
#6 UG TPX 1-SVC-POLE SET 1' DEEPER
#6 UG TPX 1-SVC-POLE
#6 UG TPX
#6 UG TPX
#6 UG TPX

LEGEND

- INSTALL (RED)
- REMOVE (GREEN)
- EXISTING TO REMAIN (BLUE)
- ABANDON (ORANGE)
- TEMPORARY (YELLOW)
- PERMANENT UTILITIES EASEMENT
- AERIAL UTILITIES EASEMENT

DETAIL CONSTRUCTION DRAWING	PIKE ENGINEERING
Site Contact: James Richardson	Phone Number: (919) 612-9716
Site Contact:	Phone Number:
GUC Contact: Doug Boone	Phone Number: (252) 364-9271
GUC Contact: Jeff Williams(Tues.-Fri.)	Phone Number: (252) 378-6224
Address: U-2817 Evans St	Scale: 1" = 50'
	Sheet #: 18

NAD 83/NA 2011

PIKE ENGINEERING
4721 HARGROVE ROAD
RALEIGH, NC 27616
LICENSURE #: F-1217

ISSUED FOR CONSTRUCTION

VERIFY PHASING AT TIME OF CONSTRUCTION. PHASING ON PRINT IS BASED ON RECORDS.

PRELIMINARY DESIGN BASED ON 25% PLANS. THIS PRELIMINARY DESIGN IS SUBJECT TO CHANGE BASED ON RIGHT-OF-WAY ACQUISITION, SCOPE CHANGES, FINAL PLAN CHANGES, COORDINATION WITH OTHER UTILITIES, ETC.

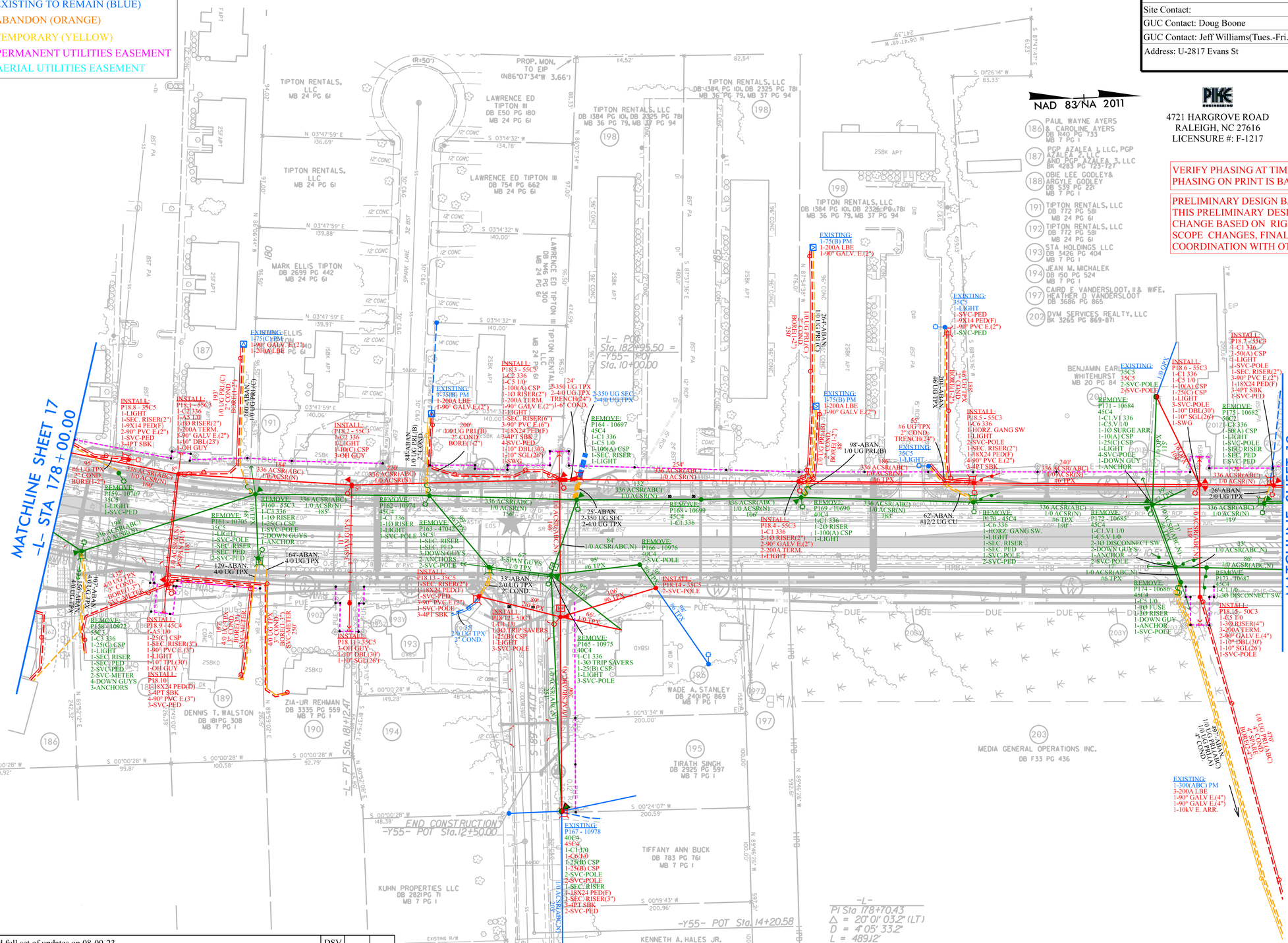
MATCHLINE SHEET 17
-L- STA 178+00.00
MATCHLINE SHEET 19
-L- STA 191+00.00
TIPTON RENTALS, LLC
DB 1384 PG 101, DB 2325 PG 781
MB 36 PG 79, MB 37 PG 94
LAWRENCE ED TIPTON III
DB E50 PG 180
MB 24 PG 61
TIPTON RENTALS, LLC
DB 754 PG 662
MB 24 PG 61
MARK ELLIS TIPTON
DB 2699 PG 442
MB 24 PG 61
LAWRENCE ED TIPTON III
DB N46 PG 300
MB 24 PG 61
PROP. MON. TO EIP (N86°07'34"W 3.66')
-L- PC Sta. 182+95.50
-Y55- POT Sta. 10+00.00
-L- PT Sta. 181+42.47
-Y55- POT Sta. 12+50.00
END CONSTRUCTION
-L- PI Sta 178+10.43
Δ = 20°01'03.2" (LT)
D = 4°05'33.2"
L = 489.12'
T = 247.08'
R = 1,400.00'
SE = 04
RO = 144'
V = 50MPH
-Y55- POT Sta. 14+20.58
PAUL WAYNE AYERS & CAROLINE AYERS DB R40 PG 733 MB 7 PG 1
PGP AZALEA 1, LLC, PGP AZALEA 2, LLC AND PGP AZALEA 3, LLC BK 4283 PG 723-727
OBIE LEE GODLEY& ARGYLE GODLEY DB 539 PG 221 MB 7 PG 1
TIPTON RENTALS, LLC DB 772 PG 581 MB 24 PG 61
TIPTON RENTALS, LLC DB 772 PG 581 MB 24 PG 61
STA HOLDINGS LLC DB 3426 PG 404 MB 7 PG 1
JEAN M. MICHALEK DB 150 PG 524 MB 7 PG 1
CAIRD F. VANDERSLOOT, II & WIFE, HEATHER D VANDERSLOOT DB 3686 PG 865
DVM SERVICES REALTY, LLC BK 3265 PG 869-871
BENJAMIN EARL WHITEHURST MB 20 PG 84
DENNIS T. WALSTON DB 181PG 308 MB 7 PG 1
ZIA-UR REHMAN DB 3335 PG 559 MB 7 PG 1
WADE A. STANLEY DB 2401PG 869 MB 7 PG 1
TIRATH SINGH DB 2925 PG 597 MB 7 PG 1
TIFFANY ANN BUCK DB 783 PG 761 MB 7 PG 1
KUHN PROPERTIES LLC DB 2821PG 71 MB 7 PG 1
KENNETH A. HALES JR. & DONNARIE M. HALES DB 3054 PG 372 MB 7 PG 1
MEDIA GENERAL OPERATIONS INC. DB F33 PG 436
INSTALL: P18.8 - 35C5 1-LIGHT 1-SEC. RISER(2") 1-9X14 PED(F) 2-90° PVC E.(2") 1-SVC-PED 1-4PT SBK
INSTALL: P18.1 - 55C3 1-C2 336 1-C5 1/0 2-10 RISER(2") 1-200A TERM. 1-90° GALV E.(2") 1-10" DBL(23") 1-OH GUY
INSTALL: P18.2 - 55C3 1-C3 336 1-LIGHT 1-10(C) CSP 1-OH GUY
INSTALL: P18.3 - 55C3 1-C2 336 1-C5 1/0 1-100(A) CSP 1-10 RISER(2") 1-200A TERM. 1-90° GALV E.(2") 1-10" DBL(30') 1-10" SGL(26') 1-SWG
INSTALL: P18.4 - 55C3 1-C6 336 1-HORZ. GANG SW 1-LIGHT 2-SVC-POLE 1-SEC. RISER(2") 1-18X24 PED(F) 1-90° PVC E.(2") 3-4PT SBK
INSTALL: P18.5 - 55C3 1-C6 336 1-HORZ. GANG SW 1-LIGHT 3-SVC-POLE 1-SEC. RISER(2") 1-18X24 PED(F) 1-90° PVC E.(2") 3-4PT SBK
INSTALL: P18.6 - 55C3 1-C1 336 1-C5 1/0 (") 1-10(A) CSP 1-25(C) CSP 1-LIGHT 3-SVC-POLE 1-10" DBL(30') 1-10" SGL(26') 1-SWG
INSTALL: P18.7 - 55C3 1-C1 336 1-50(A) CSP 1-LIGHT 4-SVC-POLE 1-SEC. RISER 1-SEC. PED 1-SVC-PED 1-90° 1-ANCHOR
INSTALL: P18.9 - 45C4 1-A5 1/0 1-25(C) CSP 1-SEC. RISER(2") 1-90° PVC E.(3") 1-OH GUY
INSTALL: P18.10 - 18X24 PED(D) 3-4PT SBK 4-90° PVC E.(3") 3-SVC-PED
INSTALL: P18.11 - 35C5 3-OH GUY 1-10" DBL(30') 1-10" SGL(26')
INSTALL: P18.12 - 50C3 1-C1 1/0 1-30 TRIP SAVERS 1-SBK CSP 1-LIGHT 3-SVC-POLE
INSTALL: P18.13 - 35C5 1-SEC. RISER(2") 1-18X24 PED(F) 1-SVC-POLE 3-90° PVC E.(2") 3-SVC-POLE 3-4PT SBK
INSTALL: P18.14 - 35C5 2-SVC-POLE
INSTALL: P18.15 - 50C3 1-C1 1/0 1-30 RISER(4") 3-200A TERM. 3-90° GALV E.(4") 1-10" DBL(30') 1-10" SGL(26') 1-SVC-POLE
INSTALL: P18.16 - 50C3 1-C1 336 1-50(A) CSP 1-LIGHT 1-SEC. RISER(2") 3-90° PVC E.(2") 1-18X24 PED(F) 3-4PT SBK 1-SVC-PED
REMOVE: P159 - 10707 35C5 1-LIGHT 1-SVC-PED
REMOVE: P160 - 55C3 1-C3 336 1-10 RISER 1-25(C) CSP 1-SVC-POLE 2-DOWN GUYS 1-ANCHOR 2-SVC-PED
REMOVE: P161 - 10705 35C5 1-LIGHT 1-SVC-POLE 1-SEC. RISER 1-SEC. PED 2-SVC-PED
REMOVE: P162 - 10974 45C4 1-C1 336 1-10 RISER 1-SEC. RISER 1-SEC. PED 1-SVC-POLE
REMOVE: P163 - 47042 35C5 1-SEC. RISER 1-SEC. PED 3-DOWN GUYS 2-ANCHORS 2-SVC-POLE
REMOVE: P164 - 10697 45C4 1-C1 336 1-C5 1/0 1-100(A) CSP 1-SEC. RISER 1-LIGHT
REMOVE: P165 - 10975 40C4 1-C1 336 1-30 TRIP SAVERS 1-25(B) CSP 1-LIGHT 3-SVC-POLE
REMOVE: P166 - 10976 40C4 2-SVC-POLE
REMOVE: P167 - 10978 40C4 45C4 1-C1 1/0 1-C6 3/0 1-25(B) CSP 1-25(B) CSP 2-SVC-POLE 2-SVC-POLE 1-SEC. RISER 1-18X24 PED(F) 1-SEC. RISER(3") 1-4PT SBK 1-SVC-PED
REMOVE: P168 - 10699 45C4 1-C1 336
REMOVE: P169 - 10690 40C4 1-C1 336 1-20 RISER 1-100(A) CSP 1-LIGHT
REMOVE: P170 - 45C4 1-C6 336 1-HORZ. GANG SW. 1-LIGHT 1-SEC. RISER 1-SEC. PED 1-SVC-POLE 2-SVC-PED
REMOVE: P172 - 10685 45C4 1-C1 V1 1/0 1-C5 V 1/0 2-30 DISCONNECT SW. 2-DOWN GUYS 1-ANCHOR 1-SVC-POLE
REMOVE: P173 - 10682 45C4 1-C1 1/0 1-30 DISCONNECT SW.
REMOVE: P174 - 10686 45C4 1-C5 1/0 1-10 FUSE 1-30 RISER 1-DOWN GUY 1-ANCHOR 1-SVC-POLE
REMOVE: P175 - 10682 50C2 1-C 336 1-50(A) CSP 1-LIGHT 1-SEC. RISER 1-SEC. PED 1-SVC-PED
EXISTING: 1-75(C) PM 1-200A LBE 1-90° GALV. E.(2") 1-200A LBE
EXISTING: 1-75(B) PM 1-200A LBE 1-90° GALV E.(2")
EXISTING: 35C5 1-LIGHT 1-SVC-PED 1-9X14 PED(F) 1-90° PVC E.(2") 1-SVC-PED
EXISTING: 35C5 35C5 2-SVC-POLE 2-SVC-POLE
EXISTING: 1-300(ABC) PM 3-200A LBE 1-90° GALV E.(4") 1-90° GALV E.(4") 1-10kV E. ARR.
336 ACSR(ABC) 1/0 ACSR(N)
336 ACSR(ABC) 1/0 ACSR(N) #6 TPX
160'-ABAN. 4/0 UG TPX
129'-ABAN. 4/0 UG TPX
165'-ABAN. 4/0 UG TPX
98'-ABAN. 1/0 UG PRI.(B)
84'-ABAN. 1/0 UG PRI.(B) 2" COND.
264'-ABAN. 1/0 UG PRI.(C) 2" COND.
201'-ABAN. #6 UG TPX
62'-ABAN. #12/2 UG CU
26'-ABAN. 2/0 UG TPX
33'-ABAN. 2/0 UG TPX 2" COND.
25'-ABAN. 2-350 UG SEC. 2-4/0 UG TPX
2-350 UG TPX 2-4/0 UG TPX TRENCH(24") 1-6" COND.
#6 UG TPX 2" COND. TRENCH(24")
2-4/0 UG TPX 2" COND. BORE(12") 4" SPARE
1/0 UG PRI.(B) 2" COND. BORE(12")
1/0 UG PRI.(C) 2" COND. BORE(12")
1/0 UG PRI.(A) 1/0 UG PRI.(B) 1/0 UG PRI.(C) 4" SPARE BORE(24")
1/0 UG PRI.(A) 1/0 UG PRI.(B) 1/0 UG PRI.(C) 4" SPARE BORE(24") #6 UG TPX

LEGEND

- INSTALL (RED)
- REMOVE (GREEN)
- EXISTING TO REMAIN (BLUE)
- ABANDON (ORANGE)
- TEMPORARY (YELLOW)
- PERMANENT UTILITIES EASEMENT
- AERIAL UTILITIES EASEMENT

DETAIL CONSTRUCTION DRAWING	PIKE ENGINEERING
Site Contact: James Richardson	Phone Number: (919) 612-9716
Site Contact:	Phone Number:
GUC Contact: Doug Boone	Phone Number: (252) 364-9271
GUC Contact: Jeff Williams(Tues.-Fri.)	Phone Number: (252) 378-6224
Address: U-2817 Evans St	Scale: 1" = 50'
	Sheet #: 19

PIKE ENGINEERING
4721 HARGROVE ROAD
RALEIGH, NC 27616
LICENSURE #: F-1217

ISSUED FOR CONSTRUCTION

VERIFY PHASING AT TIME OF CONSTRUCTION. PHASING ON PRINT IS BASED ON RECORDS.

PRELIMINARY DESIGN BASED ON 25% PLANS. THIS PRELIMINARY DESIGN IS SUBJECT TO CHANGE BASED ON RIGHT-OF-WAY ACQUISITION, SCOPE CHANGES, FINAL PLAN CHANGES, COORDINATION WITH OTHER UTILITIES, ETC.

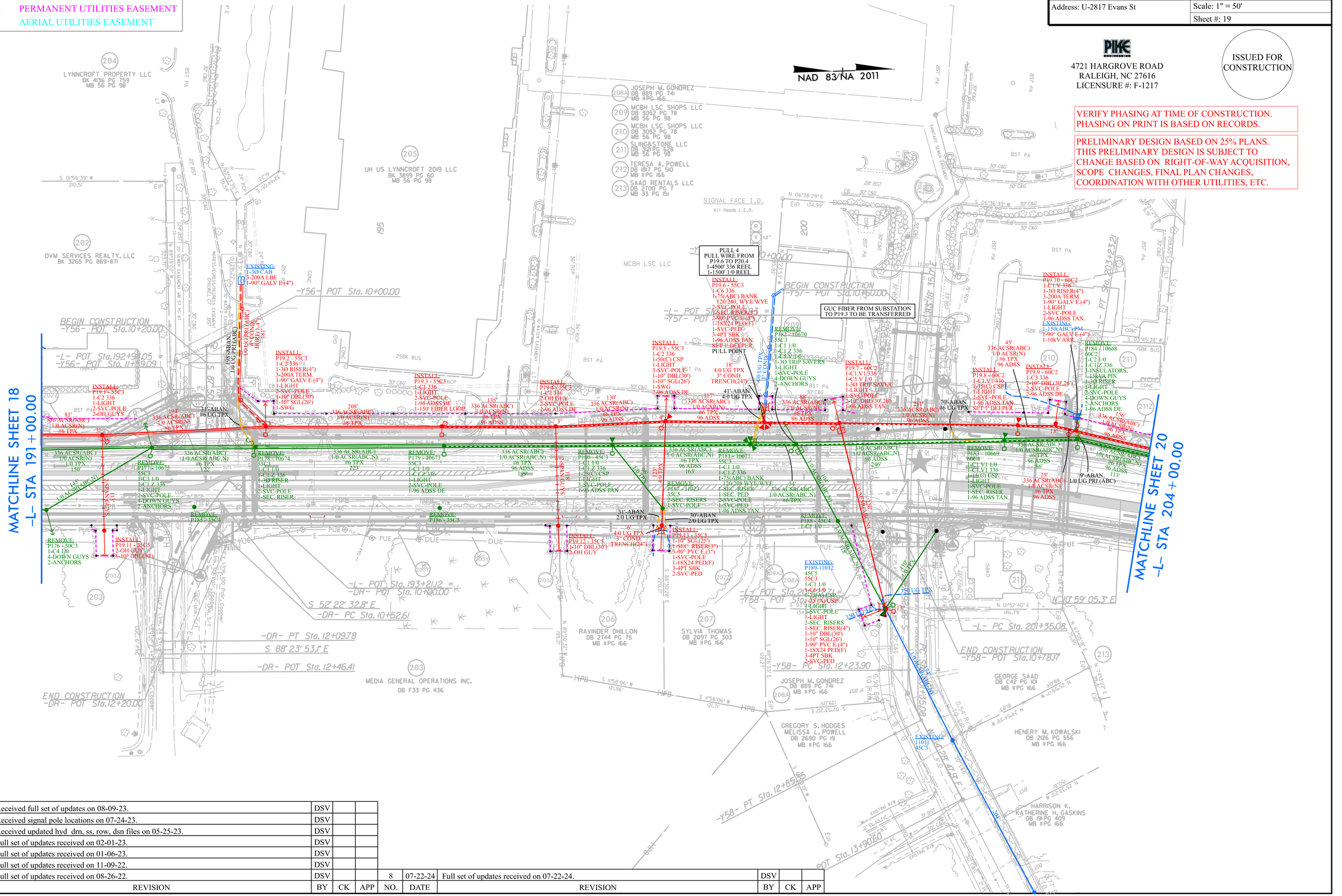
NAD 83/NA 2011
MATCHLINE SHEET 18
-L- STA 191+00.00
MATCHLINE SHEET 20
-L- STA 204+00.00
LYNNCROFT PROPERTY LLC
BK 4136 PG 759
MB 56 PG 98
DVM SERVICES REALTY, LLC
BK 3265 PG 869-871
UH US LYNNCROFT 2019 LLC
BK 3899 PG 60
MB 56 PG 98
JOSEPH M. GONDREZ
DB 889 PG 741
MB II PG 166
MCBH LSC SHOPS LLC
DB 3052 PG 78
MB 56 PG 98
SLINGASTONE LLC
DB 3021PG 628
MB 56 PG 98
TERESA A. POWELL
DB 1817 PG 510
MB II PG 166
SAAD RENTALS LLC
DB 2700 PG 7
MB 33 PG 151
MCBH LSC LLC
RAVINDER DHILLON
DB 2744 PG 75
MB II PG 166
SYLVIA THOMAS
DB 2097 PG 303
MB II PG 166
MEDIA GENERAL OPERATIONS INC.
DB F33 PG 436
GREGORY S. HODGES
MELISSA L. POWELL
DB 2690 PG 19
MB II PG 166
GEORGE SAAD
DB C42 PG 101
MB II PG 166
HENERY M. KOWALSKI
DB 2126 PG 556
MB II PG 166
HARRISON K. KATHERINE H. GASKINS
DB 191 PG 409
MB II PG 166
-L- POT Sta.10+00.00
-Y56- POT Sta.10+00.00
BEGIN CONSTRUCTION
-Y56- POT Sta.10+20.00
-L- POT Sta.192+98.05
-Y56- POT Sta.11+89.09
-L- POT Sta.193+21.2 =
-DR- POT Sta.10+00.00
S 52° 22' 32.8" E
-DR- PC Sta.10+52.61
-DR- PT Sta.12+09.78
S 88° 23' 53.1" E
-DR- POT Sta.12+46.41
END CONSTRUCTION
-DR- POT Sta.12+20.00
-Y57- POT Sta.10+00.00
-L- POT Sta.200+00.00
-Y57- POT Sta.10+50.00
-L- POT Sta.203+23.2
-L- PT Sta.203+32.2
-Y58- POT Sta.10+00.00
-L- PC Sta.201+35.08
-Y58- PC Sta.12+23.90
END CONSTRUCTION
-Y58- POT Sta.10+78.17
-Y58- PT Sta.12+85.35
POT Sta.13+90.20
N 10° 59' 05.3" E
N 26° 47' 49" E
GUC FIBER FROM SUBSTATION TO P19.3 TO BE TRANSFERRED
PULL 4 PULL WIRE FROM P19.6 TO P20.4 1-4500' 336 REEL 1-1500' 1/0 REEL
INSTALL: P19.6 - 55C3 1-C6 336 1-75(ABC) BANK 120/240, WYE/WYE 2-SVC-POLE 2-SEC RISER(3") 2-90° PVC E.(3") 1-18X24 PED(F) 1-SVC-PED 3-4FT SBK 1-96 ADSS TAN. SET 1' DEEPER
PULL POINT
INSTALL: P19.5 - 55C3 1-C2 336 1-SWC CSP 1-LIGHT 3-SVC-POLE 1-10" DBL(30') 1-10" SGL(26') 1-SWG 296 ADSS DE
INSTALL: P19.3 - 55C3 1-LIGHT 2-SVC-POLE 1-96 ADSS DE 1-150' FIBER LOOP
INSTALL: P19.4 - 55C3 1-C2 336 2-OH GUYS 2-SVC-POLE 2-96 ADSS DE
INSTALL: P19.2 - 55C3 1-C2 336 PA 3-200A TERM. 1-90° GALV E.(4") 1-30 RISER(4") 1-LIGHT 2-SVC-POLE 1-10" DBL(30') 1-10" SGL(26') 1-SWG
EXISTING: 1-30 CAB 3-200A LBE 3-90° GALV E(4")
REMOVE: P19.2 - 10674 1-C2 336 PA 1-30 RISER 1-90° GALV E.(4") 3-200A TERM. 1-SWG
REMOVE: P178 - 10674 55C3 1-C1 1/0 1-C1 Z 336 1-30 RISER 1-LIGHT 2-SVC-POLE 1-SEC. RISER
REMOVE: P179 - 10673 55C3 1-C1 1/0 1-C1 Z 336 1-LIGHT 2-SVC-POLE 1-96 ADSS DE
REMOVE: P180 - 45C3 1-C1 1/0 1-C1 Z 336 1-25(C) CSP 1-LIGHT 3-SVC-POLE 1-96 ADSS TAN.
REMOVE: P181 - 10671 55C3 1-75(ABC) BANK 120/208 WYE/WYE 1-SEC. RISER 1-SEC. PED 2-SVC-POLE 1-SVC-PED 1-96 ADSS TAN.
REMOVE: P183 - 10669 60C3 1-C1 V1 1/0 1-C1 V1 336 1-25(C) CSP 1-LIGHT 1-SVC-POLE 1-SEC. RISER 1-96 ADSS TAN.
REMOVE: P184 - 10668 60C2 1-C1 1/0 1-C1 Z 336 1-INSULATORS, 1-SAVA PIN 1-30 RISER 1-LIGHT 3-SVC-POLE 4-DOWN GUYS 2-ANCHORS 1-96 ADSS DE
REMOVE: P185 - 35C4
REMOVE: P186 - 35C5
REMOVE: P187 - 11023 35C5 2-SEC. RISERS 2-SVC-POLE 1-SVC-POLE
REMOVE: P188 - 45C4 1-C1 1/0
REMOVE: P176 - 50C3 1-C4 1/0 4-DOWN GUYS 2-ANCHORS
INSTALL: P19.11 - 35C5 1-2-OH GUY 1-10" DBL(30')
INSTALL: P19.12 - 35C5 1-10" DBL(30') 2-OH GUY
INSTALL: P19.13 - 35C5 1-10" SGL(25') 1-SEC. RISER(3") 1-90° PVC E.(3") 1-SVC-POLE 1-18X24 PED(F) 1-4PT SBK 2-SVC-PED
INSTALL: P19.7 - 60C2 1-C1 V1 336 1-30 TRIP SAVER 1-LIGHT 1-SVC-POLE 1-10" DBL(30' 26') 1-96 ADSS TAN.
INSTALL: P19.8 - 60C2 1-C1 V1 336 1-75(CL)CSP 1-LIGHT 1-SVC-POLE 1-96 ADSS TAN. SET 1' DEEPER
INSTALL: P19.9 - 60C2 1-C3 336 2-10° DBL(30',26') 2-SVC-POLE 2-96 ADSS DE
INSTALL: P19.10 - 60C2 1-C1 V 336 1-30 RISER(4") 3-200A TERM. 1-90° GALV E.(4") 1-LIGHT 2-SVC-POLE 1-96 ADSS TAN.
EXISTING: 1-150(ABC) PM 1-90° GALV E.(4") 1-10kV ARR.
REMOVE: P189 - 11012 45C5 55C3 1-C1 1/0 1-C6 1/0 1-25(A) CSP 1-25(C) CSP 1-LIGHT 1-SVC-POLE 2-SEC. RISERS 1-SEC. RISER(4") 1-10" DBL(30') 1-10" SGL(26') 3-90° PVC E.(4") 1-18X24 PED(F) 3-4PT SBK 2-SVC-PED
EXISTING: 1101 35C3
41'-ABAN. 4/0 UG TPX
70'-ABAN. #6 UG TPX
31'-ABAN. #6 UG TPX
30'-ABAN. 2/0 UG TPX
9'-ABAN. 1/0 UG PRI.(ABC)
336 ACSR(ABC) 1/0 ACSR(N) #6 TPX 96 ADSS
336 ACSR(ABC) 1/0 ACSR(ABC,N) #6 TPX 96 ADSS
336 ACSR(ABC) 1/0 ACSR(ABC,N) #6 TPX 96 ADSS 163'
336 ACSR(ABC) 1/0 ACSR(ABC,N) #6 TPX 96 ADSS 246'
336 ACSR(ABC) 1/0 ACSR(ABC,N) #6 TPX 96 ADSS 86'
336 ACSR(ABC) 1/0 ACSR(ABC,N) #6 TPX 96 ADSS 113'
336 ACSR(ABC) 1/0 ACSR(ABC,N) #6 TPX 96 ADSS 199'
336 ACSR(ABC) 1/0 ACSR(ABC,N) #6 TPX 96 ADSS 221'
336 ACSR(ABC) 1/0 ACSR(N) #6 TPX 96 ADSS 150'
336 ACSR(ABC) 1/0 ACSR(N) #6 TPX 96 ADSS 81'
336 ACSR(ABC) 1/0 ACSR(N) #6 TPX 96 ADSS 45'
336 ACSR(ABC) 1/0 ACSR(N) #6 TPX 96 ADSS 156'
336 ACSR(ABC) 1/0 ACSR(N) #6 TPX 96 ADSS 208'
336 ACSR(ABC) 1/0 ACSR(N) #6 TPX 96 ADSS 135'
336 ACSR(ABC) 1/0 ACSR(N) #6 TPX 96 ADSS 130'
336 ACSR(ABC) 1/0 ACSR(N) #6 TPX 96 ADSS 88'
336 ACSR(ABC) 1/0 ACSR(N) #6 TPX 96 ADSS 54'
336 ACSR(ABC) 1/0 ACSR(N) #6 TPX 96 ADSS 25'
336 ACSR(ABC) 1/0 ACSR(N) #6 TPX 96 ADSS 156'
336 ACSR(ABC) 1/0 ACSR(N) #6 TPX 96 ADSS 198'
336 ACSR(ABC) 1/0 ACSR(N) #6 TPX 96 ADSS 122'
336 ACSR(ABC) 1/0 ACSR(N) #6 TPX 96 ADSS 221'
336 ACSR(ABC) 1/0 ACSR(N) #6 TPX 96 ADSS 199

LEGEND

- INSTALL (RED)
- REMOVE (GREEN)
- EXISTING TO REMAIN (BLUE)
- ABANDON (ORANGE)
- TEMPORARY (YELLOW)
- PERMANENT UTILITIES EASEMENT
- AERIAL UTILITIES EASEMENT

DETAIL CONSTRUCTION DRAWING	PIKE ENGINEERING
Site Contact: James Richardson	Phone Number: (919) 612-9716
Site Contact:	Phone Number:
GUC Contact: Doug Boone	Phone Number: (252) 364-9271
GUC Contact: Jeff Williams(Tues.-Fri.)	Phone Number: (252) 378-6224
Address: U-2817 Evans St	Scale: 1" = 50'
	Sheet #: 20

PIKE ENGINEERING
4721 HARGROVE ROAD
RALEIGH, NC 27616
LICENSURE #: F-1217

ISSUED FOR CONSTRUCTION

VERIFY PHASING AT TIME OF CONSTRUCTION. PHASING ON PRINT IS BASED ON RECORDS.

PRELIMINARY DESIGN BASED ON 25% PLANS. THIS PRELIMINARY DESIGN IS SUBJECT TO CHANGE BASED ON RIGHT-OF-WAY ACQUISITION, SCOPE CHANGES, FINAL PLAN CHANGES, COORDINATION WITH OTHER UTILITIES, ETC.

NAD 83/NA 2011

MATCHLINE SHEET 28 -Y60- STA 27+00.00

MATCHLINE SHEET 19 -L- STA 204+00.00

MATCHLINE SHEET 21 -L- STA 217+00.00

MATCHLINE SHEET 29 -Y60- STA 37+50.00

-L- POT Sta.212+71.56 = -Y60- POT Sta.33+21.45

NO.	DATE	REVISION	BY	CK	APP
7	08-09-23	Received full set of updates on 08-09-23.	DSV		
6	07-24-23	Received signal pole locations on 07-24-23.	DSV		
5	05-25-23	Received updated hyd drn, ss, row, dsn files on 05-25-23.	DSV		
4	02-01-23	Full set of updates received on 02-01-23.	DSV		
3	01-06-23	Full set of updates received on 01-06-23.	DSV		
2	11-09-22	Full set of updates received on 11-09-22.	DSV		
1	08-26-22	Full set of updates received on 08-26-22.	DSV		
8	07-22-24	Full set of updates received on 07-22-24.	DSV		

LEGEND

- INSTALL (RED)
- REMOVE (GREEN)
- EXISTING TO REMAIN (BLUE)
- ABANDON (ORANGE)
- TEMPORARY (YELLOW)
- PERMANENT UTILITIES EASEMENT
- AERIAL UTILITIES EASEMENT

DETAIL CONSTRUCTION DRAWING	PIKE ENGINEERING
Site Contact: James Richardson	Phone Number: (919) 612-9716
Site Contact:	Phone Number:
GUC Contact: Doug Boone	Phone Number: (252) 364-9271
GUC Contact: Jeff Williams(Tues.-Fri.)	Phone Number: (252) 378-6224
Address: U-2817 Evans St	Scale: 1" = 50'
	Sheet #: 21

PIKE ENGINEERING
4721 HARGROVE ROAD
RALEIGH, NC 27616
LICENSURE #: F-1217

ISSUED FOR CONSTRUCTION

VERIFY PHASING AT TIME OF CONSTRUCTION. PHASING ON PRINT IS BASED ON RECORDS.

PRELIMINARY DESIGN BASED ON 25% PLANS. THIS PRELIMINARY DESIGN IS SUBJECT TO CHANGE BASED ON RIGHT-OF-WAY ACQUISITION, SCOPE CHANGES, FINAL PLAN CHANGES, COORDINATION WITH OTHER UTILITIES, ETC.

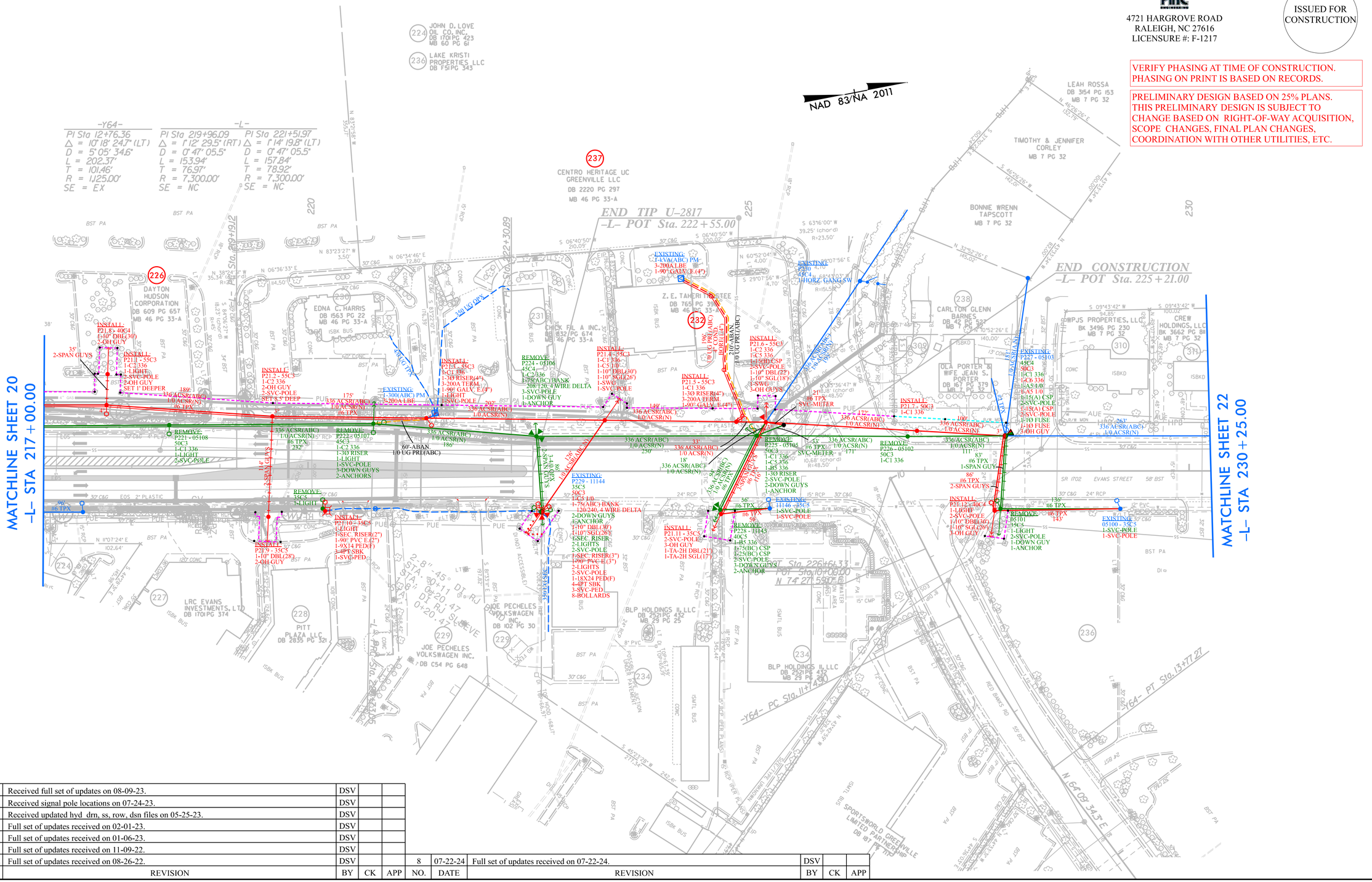

NO.	DATE	REVISION	BY	CK	APP	NO.	DATE	REVISION	BY	CK	APP
7	08-09-23	Received full set of updates on 08-09-23.	DSV								
6	07-24-23	Received signal pole locations on 07-24-23.	DSV								
5	05-25-23	Received updated hyd_drn, ss, row, dsn files on 05-25-23.	DSV								
4	02-01-23	Full set of updates received on 02-01-23.	DSV								
3	01-06-23	Full set of updates received on 01-06-23.	DSV								
2	11-09-22	Full set of updates received on 11-09-22.	DSV								
1	08-26-22	Full set of updates received on 08-26-22.	DSV			8	07-22-24	Full set of updates received on 07-22-24.	DSV		

LEGEND

- INSTALL (RED)
- REMOVE (GREEN)
- EXISTING TO REMAIN (BLUE)
- ABANDON (ORANGE)
- TEMPORARY (YELLOW)
- PERMANENT UTILITIES EASEMENT
- AERIAL UTILITIES EASEMENT

DETAIL CONSTRUCTION DRAWING	PIKE ENGINEERING
Site Contact: James Richardson	Phone Number: (919) 612-9716
Site Contact:	Phone Number:
GUC Contact: Doug Boone	Phone Number: (252) 364-9271
GUC Contact: Jeff Williams(Tues.-Fri.)	Phone Number: (252) 378-6224
Address: U-2817 Evans St	Scale: 1" = 50'
	Sheet #: 25

PIKE ENGINEERING
4721 HARGROVE ROAD
RALEIGH, NC 27616
LICENSURE #: F-1217

ISSUED FOR CONSTRUCTION

VERIFY PHASING AT TIME OF CONSTRUCTION. PHASING ON PRINT IS BASED ON RECORDS.

PRELIMINARY DESIGN BASED ON 25% PLANS. THIS PRELIMINARY DESIGN IS SUBJECT TO CHANGE BASED ON RIGHT-OF-WAY ACQUISITION, SCOPE CHANGES, FINAL PLAN CHANGES, COORDINATION WITH OTHER UTILITIES, ETC.

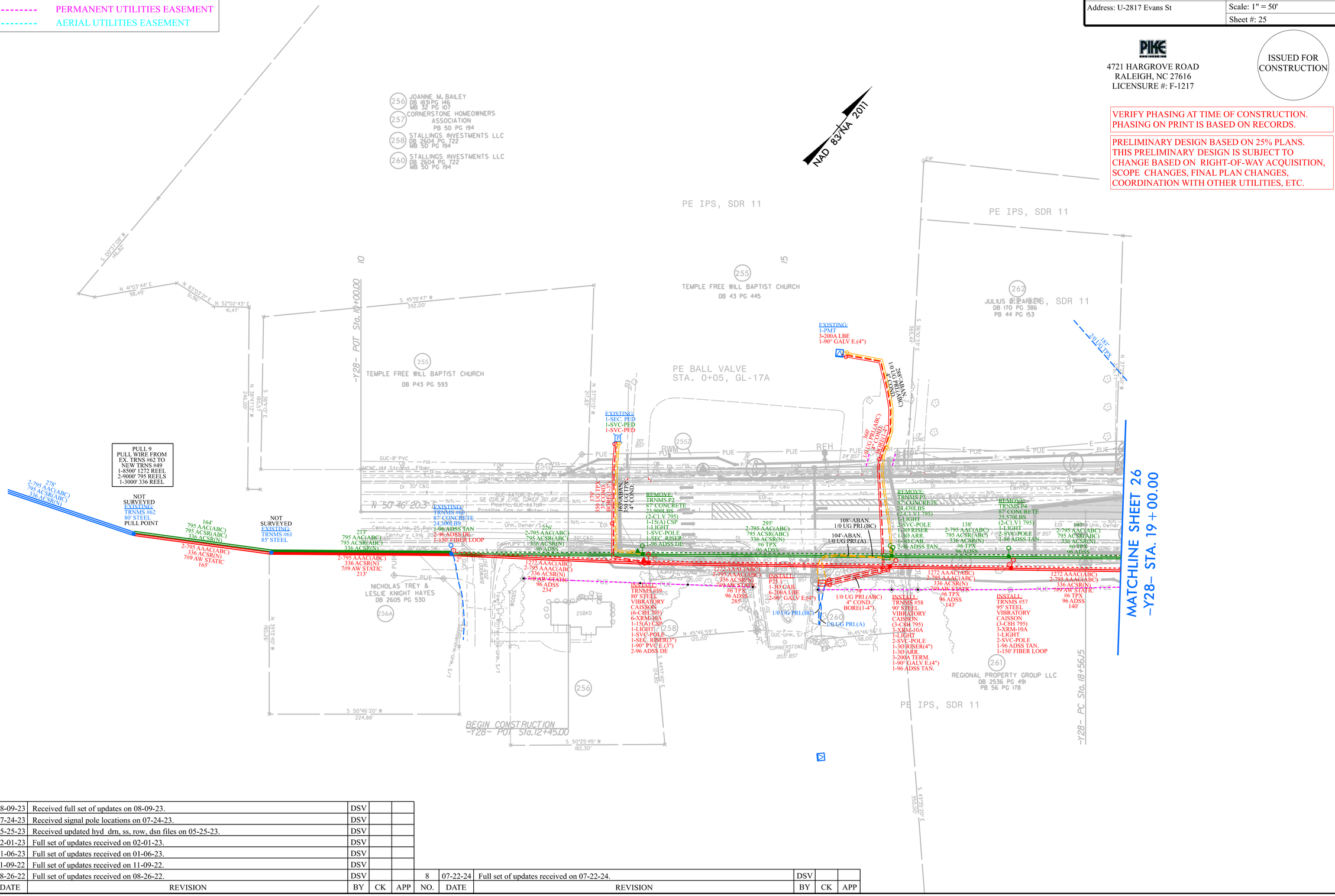

NO.	DATE	REVISION	BY	CK	APP
7	08-09-23	Received full set of updates on 08-09-23.	DSV		
6	07-24-23	Received signal pole locations on 07-24-23.	DSV		
5	05-25-23	Received updated hyd drn, ss, row, dsn files on 05-25-23.	DSV		
4	02-01-23	Full set of updates received on 02-01-23.	DSV		
3	01-06-23	Full set of updates received on 01-06-23.	DSV		
2	11-09-22	Full set of updates received on 11-09-22.	DSV		
1	08-26-22	Full set of updates received on 08-26-22.	DSV		
8	07-22-24	Full set of updates received on 07-22-24.	DSV		

LEGEND

- INSTALL (RED)
- REMOVE (GREEN)
- EXISTING TO REMAIN (BLUE)
- ABANDON (ORANGE)
- TEMPORARY (YELLOW)
- PERMANENT UTILITIES EASEMENT
- AERIAL UTILITIES EASEMENT

DETAIL CONSTRUCTION DRAWING	PIKE ENGINEERING
Site Contact: James Richardson	Phone Number: (919) 612-9716
Site Contact:	Phone Number:
GUC Contact: Doug Boone	Phone Number: (252) 364-9271
GUC Contact: Jeff Williams(Tues.-Fri.)	Phone Number: (252) 378-6224
Address: U-2817 Evans St	Scale: 1" = 50'
	Sheet #: 26

PIKE ENGINEERING
4721 HARGROVE ROAD
RALEIGH, NC 27616
LICENSURE #: F-1217

ISSUED FOR CONSTRUCTION

VERIFY PHASING AT TIME OF CONSTRUCTION. PHASING ON PRINT IS BASED ON RECORDS.

PRELIMINARY DESIGN BASED ON 25% PLANS. THIS PRELIMINARY DESIGN IS SUBJECT TO CHANGE BASED ON RIGHT-OF-WAY ACQUISITION, SCOPE CHANGES, FINAL PLAN CHANGES, COORDINATION WITH OTHER UTILITIES, ETC.

NAD 83/NA 2011

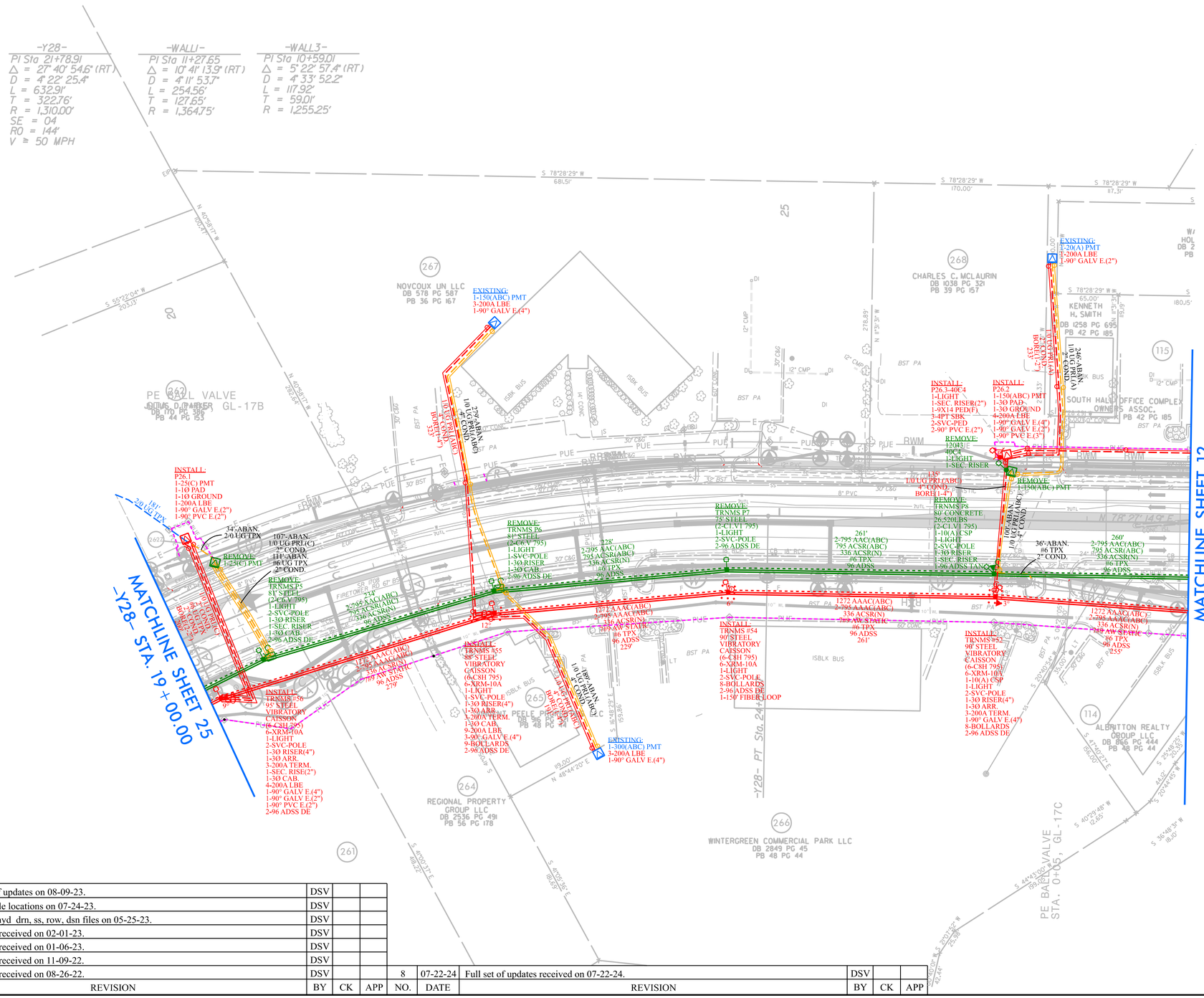
-Y28-
PI Sta 21+78.91
Δ = 27° 40' 54.6" (RT)
D = 4° 22' 25.4"
L = 632.91'
T = 322.76'
R = 1,310.00'
SE = 04
RO = 144'
V = 50 MPH
-WALL1-
PI Sta 11+27.65
Δ = 10° 41' 13.9" (RT)
D = 4° 11' 53.7"
L = 254.56'
T = 127.65'
R = 1,364.75'
-WALL3-
PI Sta 10+59.01
Δ = 5° 22' 57.4" (RT)
D = 4° 33' 52.2"
L = 117.92'
T = 59.01'
R = 1,255.25'
MATCHLINE SHEET 25
-Y28- STA. 19+00.00
MATCHLINE SHEET 12
-Y28- STA 29+00.00
-Y28- PT Sta. 24+
NOVCOUX UN LLC
DB 578 PG 587
PB 36 PG 167
CHARLES C. MCLAURIN
DB 1038 PG 321
PB 39 PG 157
KENNETH H. SMITH
DB 1258 PG 695
PB 42 PG 185
SOUTH HALL OFFICE COMPLEX OWNERS ASSOC.
PB 42 PG 185
PE BALL VALVE
JONAS D PARKER
DB 170 PG 356
PB 44 PG 153
PE BALL VALVE
STA. 0+65, GL-17C
PELE PROPERTIES LLC
DB 2536 PG 491
PB 48 PG 44
REGIONAL PROPERTY GROUP LLC
DB 2536 PG 491
PB 56 PG 178
WINTERGREEN COMMERCIAL PARK LLC
DB 2849 PG 45
PB 48 PG 44
ALBRITTON REALTY GROUP LLC
DB 866 PG 444
PB 48 PG 44
EXISTING:
1-150(ABC) PMT
3-200A LBE
1-90° GALV E.(4")
EXISTING:
1-28(A) PMT
3-200A LBE
1-90° GALV E.(2")
EXISTING:
1-300(ABC) PMT
3-200A LBE
1-90° GALV E.(4")
INSTALL:
P26.1
1-25(C) PMT
1-10 PAD
1-10 GROUND
1-200A LBE
1-90° GALV E.(2")
1-90° PVC E.(2")
INSTALL:
TRNMS #56
95' STEEL
VIBRATORY
CAISSON
(6-CSH 795)
6-XRM-10A
1-LIGHT
2-SVC-POLE
1-30 RISER(4")
1-30 ARR.
3-200A TERM.
1-SEC. RISE(2")
1-30 CAB.
4-200A LBE
1-90° GALV E.(4")
1-90° GALV E.(2")
1-90° PVC E.(2")
2-96 ADSS DE
INSTALL:
TRNMS #55
88' STEEL
VIBRATORY
CAISSON
(6-CSH 795)
6-XRM-10A
1-LIGHT
1-SVC-POLE
1-30 RISER(4")
1-30 ARR.
3-200A TERM.
9-200A LBE
3-90° GALV E.(4")
9-BOLLARDS
2-96 ADSS DE
INSTALL:
TRNMS #54
90' STEEL
VIBRATORY
CAISSON
(6-CSH 795)
6-XRM-10A
1-LIGHT
2-SVC-POLE
8-BOLLARDS
2-96 ADSS DE
1-150' FIBER LOOP
INSTALL:
TRNMS #52
90' STEEL
VIBRATORY
CAISSON
(6-CSH 795)
6-XRM-10A
1-10(A) CSP
1-LIGHT
2-SVC-POLE
1-30 RISER(4")
1-30 ARR.
3-200A TERM.
1-90° GALV E.(4")
8-BOLLARDS
2-96 ADSS DE
INSTALL:
P26.3-40C4
1-LIGHT
1-SEC. RISER(2")
1-9X14 PED(F)
3-4PT SBK
2-SVC-PED
2-90° PVC E.(2")
INSTALL:
P26.2
1-150(ABC) PMT
1-30 PAD
1-30 GROUND
4-200A LBE
1-90° GALV E.(4")
1-90° GALV E.(2")
1-90° PVC E.(3")
REMOVE:
1-25(C) PMT
REMOVE:
TRNMS P6
81' STEEL
(2-C6 V 795)
1-LIGHT
1-SVC-POLE
1-30 RISER
1-30 CAB.
2-96 ADSS DE
REMOVE:
TRNMS P5
81' STEEL
(2-C6 V 795)
1-LIGHT
2-SVC-POLE
1-30 RISER
1-SEC. RISER
1-30 CAB.
2-96 ADSS DE
REMOVE:
TRNMS P7
75' STEEL
(2-C1 V1 795)
1-LIGHT
2-SVC-POLE
2-96 ADSS DE
REMOVE:
TRNMS P8
80' CONCRETE
26,520LBS
(2-C1 V1 795)
1-10(A) CSP
1-LIGHT
2-SVC-POLE
1-30 RISER
1-SEC. RISER
1-96 ADSS TANG
REMOVE:
1-150(ABC) PMT
REMOVE:
12043
40C4
1-LIGHT
1-SEC. RISER
34'-ABAN.
2/0 UG TPX
107'-ABAN.
1/0 UG PRI(C)
2" COND.
111'-ABAN.
#6 UG TPX
2" COND.
279'-ABAN.
1/0 UG PRI(A)
4" COND.
BORE I-IN
107'-ABAN.
1/0 UG PRI(A)
4" COND.
36'-ABAN.
#6 TPX
2" COND.
260'
2-795 AAC(ABC)
795 ACSR(ABC)
336 ACSR(N)
#6 TPX
96 ADSS
255'
261'
2-795 AAC(ABC)
795 ACSR(ABC)
336 ACSR(N)
#6 TPX
96 ADSS
228'
2-795 AAC(ABC)
795 ACSR(ABC)
336 ACSR(N)
#6 TPX
96 ADSS
1272 AAAC(ABC)
2-795 AAAC(ABC)
336 ACSR(N)
#6 TPX
96 ADSS
229'
1272 AAAC(ABC)
2-795 AAAC(ABC)
336 ACSR(N)
#6 TPX
96 ADSS
279'
1272 AAAC(ABC)
2-795 AAAC(ABC)
336 ACSR(N)
#6 TPX
96 ADSS
255'
1272 AAAC(ABC)
2-795 AAAC(ABC)
336 ACSR(N)
#6 TPX
96 ADSS
261'
181'
2/0 UG TPX
S 78°28'29" W
681.51'
S 78°28'29" W
170.00'
S 78°28'29" W
117.31'
N 40°58'17" W
100.47'
S 55°22'04" W
203.13'
N 40°58'17" W
282.47'
N 11°51'31" W
278.89'
S 16°48'29" E
159.86'
N 48°44'20" E
N 40°00'37" E
S 40°00'37" E
S 40°58'17" E
S 44°43'00" W
S 40°29'48" W
S 36°48'39" W
N 78°27'49" E
S 20°47'52" W
S 20°48'05" W
S 20°48'05" W
S 20°48'05

LEGEND

- INSTALL (RED)
- REMOVE (GREEN)
- EXISTING TO REMAIN (BLUE)
- ABANDON (ORANGE)
- TEMPORARY (YELLOW)
- PERMANENT UTILITIES EASEMENT
- AERIAL UTILITIES EASEMENT

DETAIL CONSTRUCTION DRAWING	PIKE ENGINEERING
Site Contact: James Richardson	Phone Number: (919) 612-9716
Site Contact:	Phone Number:
GUC Contact: Doug Boone	Phone Number: (252) 364-9271
GUC Contact: Jeff Williams(Tues.-Fri.)	Phone Number: (252) 378-6224
Address: U-2817 Evans St	Scale: 1" = 50'
	Sheet #: 27

PIKE ENGINEERING
4721 HARGROVE ROAD
RALEIGH, NC 27616
LICENSURE #: F-1217

ISSUED FOR CONSTRUCTION

VERIFY PHASING AT TIME OF CONSTRUCTION. PHASING ON PRINT IS BASED ON RECORDS.

PRELIMINARY DESIGN BASED ON 25% PLANS. THIS PRELIMINARY DESIGN IS SUBJECT TO CHANGE BASED ON RIGHT-OF-WAY ACQUISITION, SCOPE CHANGES, FINAL PLAN CHANGES, COORDINATION WITH OTHER UTILITIES, ETC.


-Y28-
PI Sta 40+83.04
Δ = 15°12' 25.8" (LT)
D = 1° 33' 09.8"
L = 979.38'
T = 492.59'
R = 3,690.00'
SE = 03
RO = 108'
V = 50 MPH
-Y29-
PI Sta 10+53.13
Δ = 10° 02' 01.9" (RT)
D = 10° 25' 02.7"
L = 96.32'
T = 48.28'
R = 550.00'
SE = EX
-WALL2-
PI Sta 11+09.57
Δ = 4° 46' 55.2" (LT)
D = 4° 02' 59.6"
L = 118.08'
T = 59.07'
R = 1,414.75'
NAD 83/NA 2011
MATCHLINE SHEET 12
-Y28- STA 37+00.00
MATCHLINE SHEET 27A
-Y28- STA 47+00.00
-Y28- POC Sta. 40+84.72
-Y29- POT Sta. 12+67.05
-Y29- POC Sta.10+35.00
-Y29- POT Sta. 10+00.00
-Y29- PC Sta. 10+04.85
-Y29- PT Sta. 11+01.16
-Y28- PT Sta. 45+69.84
BEGIN CONSTRUCTION
N 2°13' 50.0" W
N 31° 15' 51.9" W
REBECCA PARAMORE MOYE, et al
DB 2555 PG 123
PB 71PG 49
SNODIE ALLEN PARAMORE JR.
DB 63 PG 246
PB 71PG 49
THOMAS W. MOYE
DB B39 PG 428
PB 71PG 49
LEE BYUNG
DB 577 PG 172
PB 43 PG 113
FREDERICK BEST
DB 3379 PG 12
IGNATIUS T. WATERMAN
DB 1102 PG 241
PB 28 PG 164
SHIRLEY A. CARRAWAY
DB 941PG 110
PB 28 PG 164
TREETOPS LLC
DB 535 PG 323
GREATER WORKS CHURCH OF JESUS CHRIST
DB 3626 PG 716
MB 32 PG 261
TREETOPS GENERAL HOMEOWNERS ASSOCIATION INC
DB 132 PG 135
PB 76 PG 676
INSTALL: TRNMS #47 80' STEEL VIBRATORY CAISSON (4-C8H 795) 4-XRM/10DDE 1-LIGHT 2-SVC-POLE 1-3Ø RISER(4") 1-3Ø ARR. 3-200A TERM. 1-3Ø CAB. 6-200A LBE 3-90° GALV E.(4") 2-96 ADSS DE
INSTALL: TRNMS #46A 85' STEEL VIBRATORY CAISSON (6-C8H 795) 6-XRM-10A 1-LIGHT 2-SVC-POLE 1-3Ø RISER(4") 1-3Ø ARR. 3-200A TERM. 1-3Ø CAB. 6-200A LBE 3-90° GALV E.(4") 2-96 ADSS DE
INSTALL: TRNMS #46 80' STEEL VIBRATORY CAISSON (3-C8H 795) 3-XRM-10A 1-15(A) CSP 1-LIGHT 2-SVC-POLE 1-96 ADSS TAN 1-150' FIBER LOOP
INSTALL: TRNMS #45 80' STEEL VIBRATORY CAISSON (6-CSH 795) 6-XRM-10A 1-LIGHT 1-SVC-POLE 2-96 ADSS DE
INSTALL: TRNMS #44 75' STEEL VIBRATORY CAISSON (6-C8H 795) 6-XRM-10A 1-795 VERT. GANG SW 1-LIGHT 1-SVC-POLE 1-3Ø RISER(4") 1-3Ø ARR. 3-200A TERM. 1-SEC. RISER(2") 1-3Ø CAB. 4-200A LBE 2-90° GALV E.(4") 1-90° GALV E.(2") 1-90° PVC E.(2") 2-96 ADSS DE
REMOVE: TRNMS P14 80' STEEL (2-C1 V1 795) 1-LIGHT 2-SVC-POLE 1-3Ø RISER 1-3Ø CAB 2-96 ADSS DE
REMOVE: TRNMS P13 80' STEEL (2-C1 V1 795) 1-LIGHT 2-SVC-POLE 1-3Ø RISER 1-3Ø CAB 2-96 ADSS DE
REMOVE: TRNMS P14 80' STEEL (2-C1 V1 795) 1-15(A)VCSP 1-LIGHT 2-SVC-POLE 3-ADSS DE
REMOVE: TRNMS P16 80' STEEL (2-C1 V1 795) 1-LIGHT 1-SVC-POLE 1-96 ADSS TAN.
REMOVE: TRNMS P17 80' CONCRETE (1-C1 V1 795) (1-C6 V 795) 1-795 VERT. GANG SW 1-LIGHT 1-SVC-POLE 1-10 RISER 1-10 CAB. 1-SEC. RISER 1-96 ADSS TAN
EXISTING: 1-35' CONC. SL 1-18X24 PED(F) 3-4PT SBK 1-SVC-PED 1-90° PVC E.(2")
EXISTING: 1-35' CONC. SL 1-SEC. PED 1-18X24 PED(F) 3-4PT SBK 3-SVC-PED 3-90° PVC E.(2")
EXISTING: 1-35' CONC. SL
EXISTING: 1-3Ø CAB. 1-TRANS BM 3-200A LBE 1-90° GALV E.(4")
EXISTING: 1-25(A) PM 1-200A LBE 1-90° GALV E.(2") 1-90° PVC E.(2")
1272 AAAC(ABC) 2-795 AAAC(ABC) 336 ACSR(N) 789 AW STATIC #6 TPX 96 ADSS
2-795 AAAC(ABC) 795 ACSR(ABC) 336 ACSR(N) #6 TPX 96 ADSS
2-795 AAAC(ABC) 795 ACSR(ABC) 336 ACSR(N) 1/0 TPX 96 ADSS
2-795 AAAC(ABC) 795 ACSR(ABC) 336 ACSR(N) 96 ADSS 258'
INSTALL: 1-75(A) PMT 1-1Ø PAD 1-1Ø GROUND 1-200A LBE 2-90° GALV E.(2") 2-90° PVC E.(2")
138'-ABAN. #6 UG TPX
#6 UG TPX 3" COND. BORE(1-2")
1/0 UG PRI.(4A) 2" COND. BORE(1-2")
110' 138'-ABAN. 12/2 UG CU
73' #6 UG TPX 2" COND. BORE(1-2")
350' UG TPX 3" COND. BORE(1-3") 97'
#6 UG TPX 3" COND. BORE(1-2") 114'
#6 UG TPX
1/0 UG PRI.(4A) 2" COND. BORE(1-2")

LEGEND

- INSTALL (RED)
- REMOVE (GREEN)
- EXISTING TO REMAIN (BLUE)
- ABANDON (ORANGE)
- TEMPORARY (YELLOW)
- PERMANENT UTILITIES EASEMENT
- AERIAL UTILITIES EASEMENT

DETAIL CONSTRUCTION DRAWING	PIKE ENGINEERING
Site Contact: James Richardson	Phone Number: (919) 612-9716
Site Contact:	Phone Number:
GUC Contact: Doug Boone	Phone Number: (252) 364-9271
GUC Contact: Jeff Williams(Tues.-Fri.)	Phone Number: (252) 378-6224
Address: U-2817 Evans St	Scale: 1" = 50'
	Sheet #: 27A

PIKE ENGINEERING
4721 HARGROVE ROAD
RALEIGH, NC 27616
LICENSURE #: F-1217

ISSUED FOR CONSTRUCTION

VERIFY PHASING AT TIME OF CONSTRUCTION. PHASING ON PRINT IS BASED ON RECORDS.

PRELIMINARY DESIGN BASED ON 25% PLANS. THIS PRELIMINARY DESIGN IS SUBJECT TO CHANGE BASED ON RIGHT-OF-WAY ACQUISITION, SCOPE CHANGES, FINAL PLAN CHANGES, COORDINATION WITH OTHER UTILITIES, ETC.

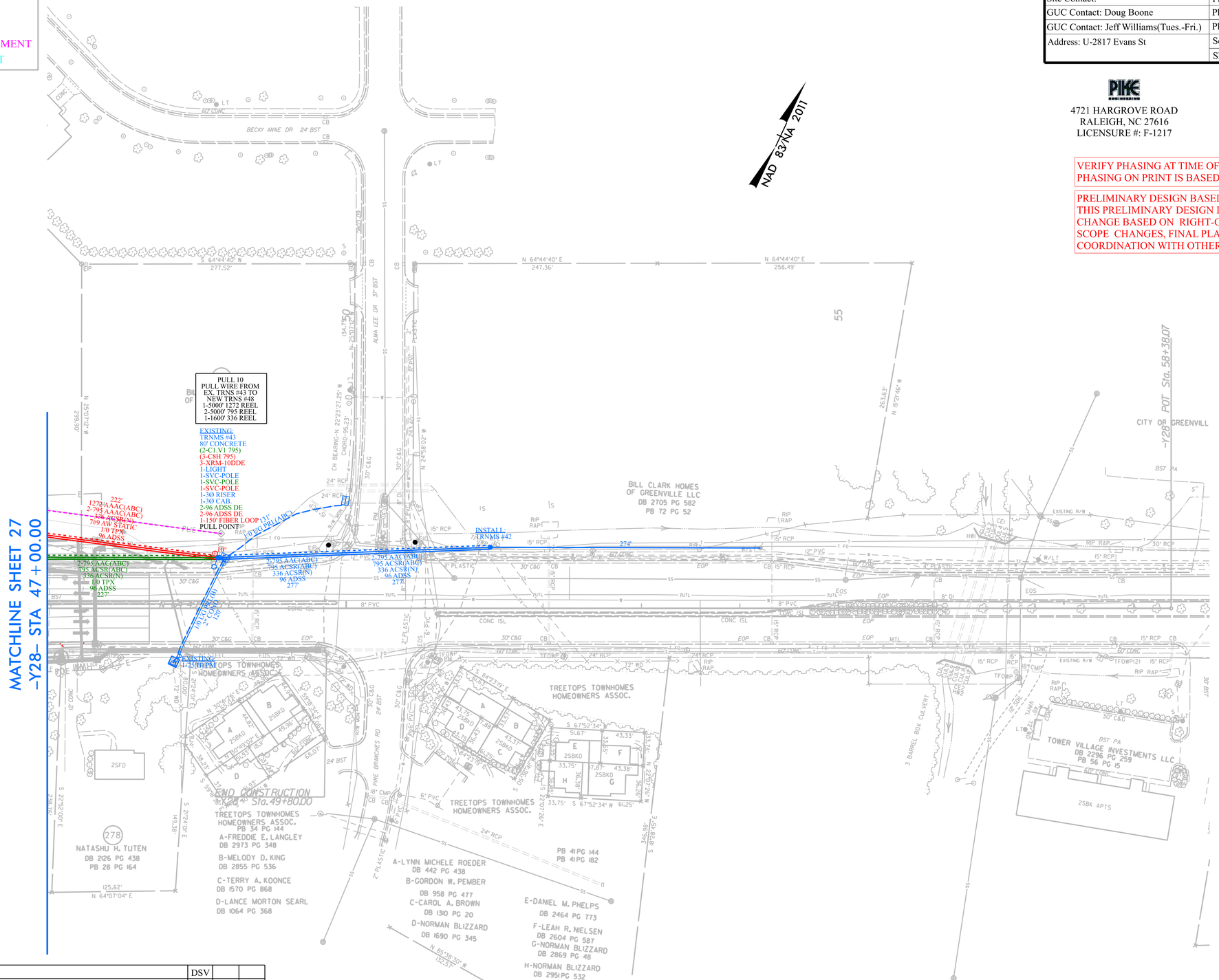

NO.	DATE	REVISION	BY	CK	APP	NO.	DATE	REVISION	BY	CK	APP
7	08-09-23	Received full set of updates on 08-09-23.	DSV								
6	07-24-23	Received signal pole locations on 07-24-23.	DSV								
5	05-25-23	Received updated hyd drn, ss, row, dsn files on 05-25-23.	DSV								
4	02-01-23	Full set of updates received on 02-01-23.	DSV								
3	01-06-23	Full set of updates received on 01-06-23.	DSV								
2	11-09-22	Full set of updates received on 11-09-22.	DSV								
1	08-26-22	Full set of updates received on 08-26-22.	DSV			8	07-22-24	Full set of updates received on 07-22-24.	DSV		

LEGEND

- INSTALL (RED)
- REMOVE (GREEN)
- EXISTING TO REMAIN (BLUE)
- ABANDON (ORANGE)
- TEMPORARY (YELLOW)
- PERMANENT UTILITIES EASEMENT
- AERIAL UTILITIES EASEMENT

DETAIL CONSTRUCTION DRAWING	PIKE ENGINEERING
Site Contact: James Richardson	Phone Number: (919) 612-9716
Site Contact:	Phone Number:
GUC Contact: Doug Boone	Phone Number: (252) 364-9271
GUC Contact: Jeff Williams(Tues.-Fri.)	Phone Number: (252) 378-6224
Address: U-2817 Evans St	Scale: 1" = 50'
	Sheet #: 28

PIKE ENGINEERING
4721 HARGROVE ROAD
RALEIGH, NC 27616
LICENSURE #: F-1217

ISSUED FOR CONSTRUCTION

VERIFY PHASING AT TIME OF CONSTRUCTION. PHASING ON PRINT IS BASED ON RECORDS.

PRELIMINARY DESIGN BASED ON 25% PLANS. THIS PRELIMINARY DESIGN IS SUBJECT TO CHANGE BASED ON RIGHT-OF-WAY ACQUISITION, SCOPE CHANGES, FINAL PLAN CHANGES, COORDINATION WITH OTHER UTILITIES, ETC.

NAD 83/NA 2011

-Y60-
PI Sta 19+07.93
Δ = 41° 56' 14.7" (LT)
D = 2° 29' 47.6"
L = 1,679.82'
T = 879.53'
R = 2,295.00'
SE = 03
RO = 101'
V = 50MPH

BEGIN CONSTRUCTION
-Y60- POC Sta.20+50.00

2-6"-45° DI RJ BEND
STA. 0+10
STA. 0+27.68
1-6" DI RJ SLEEVE
STA. 0+27.68

MATCHLINE SHEET 20
-Y60- STA 27+00.00

NO.	DATE	REVISION	BY	CK	APP
7	08-09-23	Received full set of updates on 08-09-23.	DSV		
6	07-24-23	Received signal pole locations on 07-24-23.	DSV		
5	05-25-23	Received updated hyd drn, ss, row, dsn files on 05-25-23.	DSV		
4	02-01-23	Full set of updates received on 02-01-23.	DSV		
3	01-06-23	Full set of updates received on 01-06-23.	DSV		
2	11-09-22	Full set of updates received on 11-09-22.	DSV		
1	08-26-22	Full set of updates received on 08-26-22.	DSV		
8	07-22-24	Full set of updates received on 07-22-24.	DSV		

LEGEND

- INSTALL (RED)
- REMOVE (GREEN)
- EXISTING TO REMAIN (BLUE)
- ABANDON (ORANGE)
- TEMPORARY (YELLOW)
- PERMANENT UTILITIES EASEMENT
- AERIAL UTILITIES EASEMENT

DETAIL CONSTRUCTION DRAWING	PIKE ENGINEERING
Site Contact: James Richardson	Phone Number: (919) 612-9716
Site Contact:	Phone Number:
GUC Contact: Doug Boone	Phone Number: (252) 364-9271
GUC Contact: Jeff Williams(Tues.-Fri.)	Phone Number: (252) 378-6224
Address: U-2817 Evans St	Scale: 1" = 50'
	Sheet #: 29

PIKE ENGINEERING
4721 HARGROVE ROAD
RALEIGH, NC 27616
LICENSURE #: F-1217

ISSUED FOR CONSTRUCTION

VERIFY PHASING AT TIME OF CONSTRUCTION. PHASING ON PRINT IS BASED ON RECORDS.

PRELIMINARY DESIGN BASED ON 25% PLANS. THIS PRELIMINARY DESIGN IS SUBJECT TO CHANGE BASED ON RIGHT-OF-WAY ACQUISITION, SCOPE CHANGES, FINAL PLAN CHANGES, COORDINATION WITH OTHER UTILITIES, ETC.

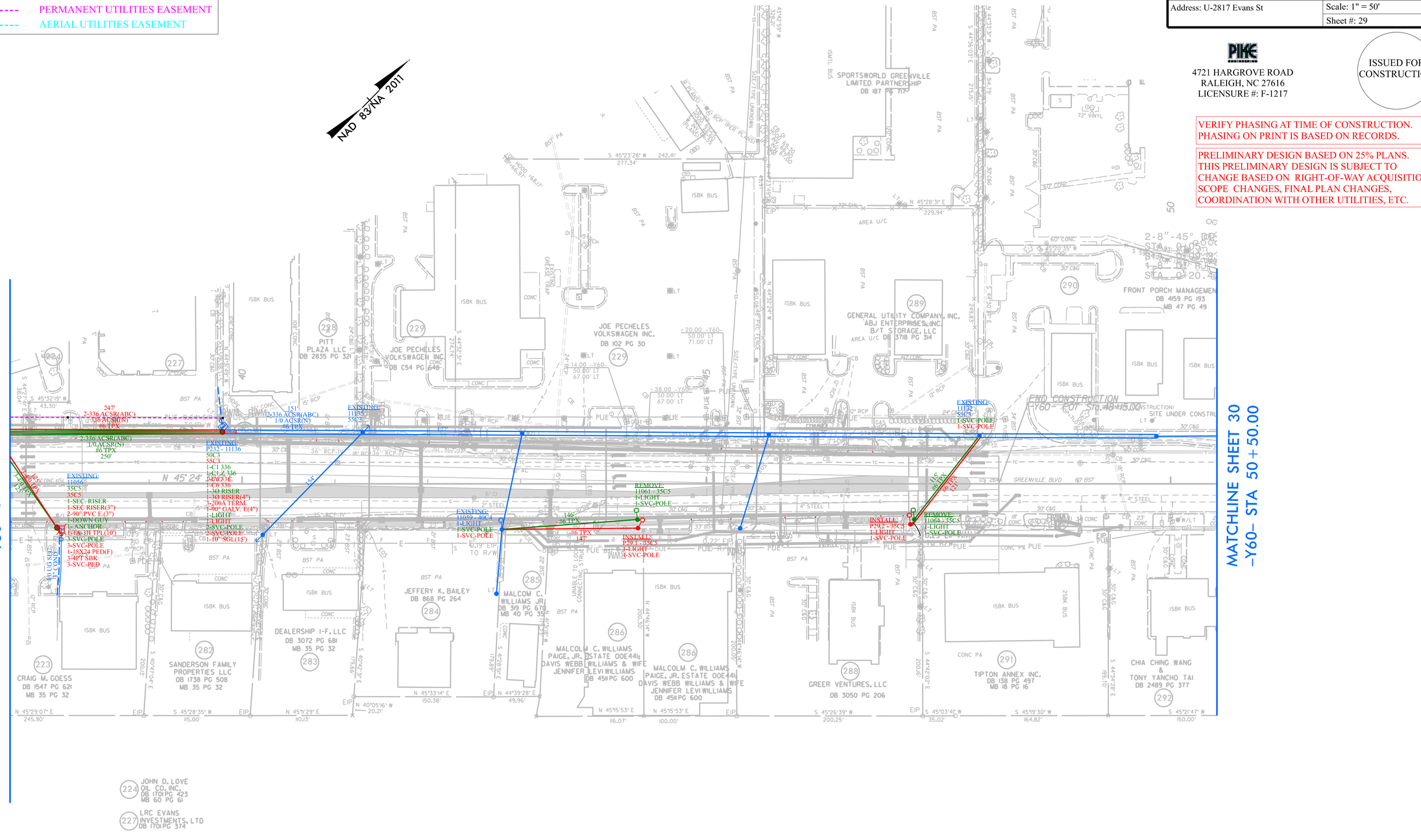

NO.	DATE	REVISION	BY	CK	APP	NO.	DATE	REVISION	BY	CK	APP
7	08-09-23	Received full set of updates on 08-09-23.	DSV			8	07-22-24	Full set of updates received on 07-22-24.	DSV		
6	07-24-23	Received signal pole locations on 07-24-23.	DSV								
5	05-25-23	Received updated hyd drn, ss, row, dsn files on 05-25-23.	DSV								
4	02-01-23	Full set of updates received on 02-01-23.	DSV								
3	01-06-23	Full set of updates received on 01-06-23.	DSV								
2	11-09-22	Full set of updates received on 11-09-22.	DSV								
1	08-26-22	Full set of updates received on 08-26-22.	DSV								

Appendix B: Standard Distribution Pole Framing

[Balance of Page Left Blank Intentionally]

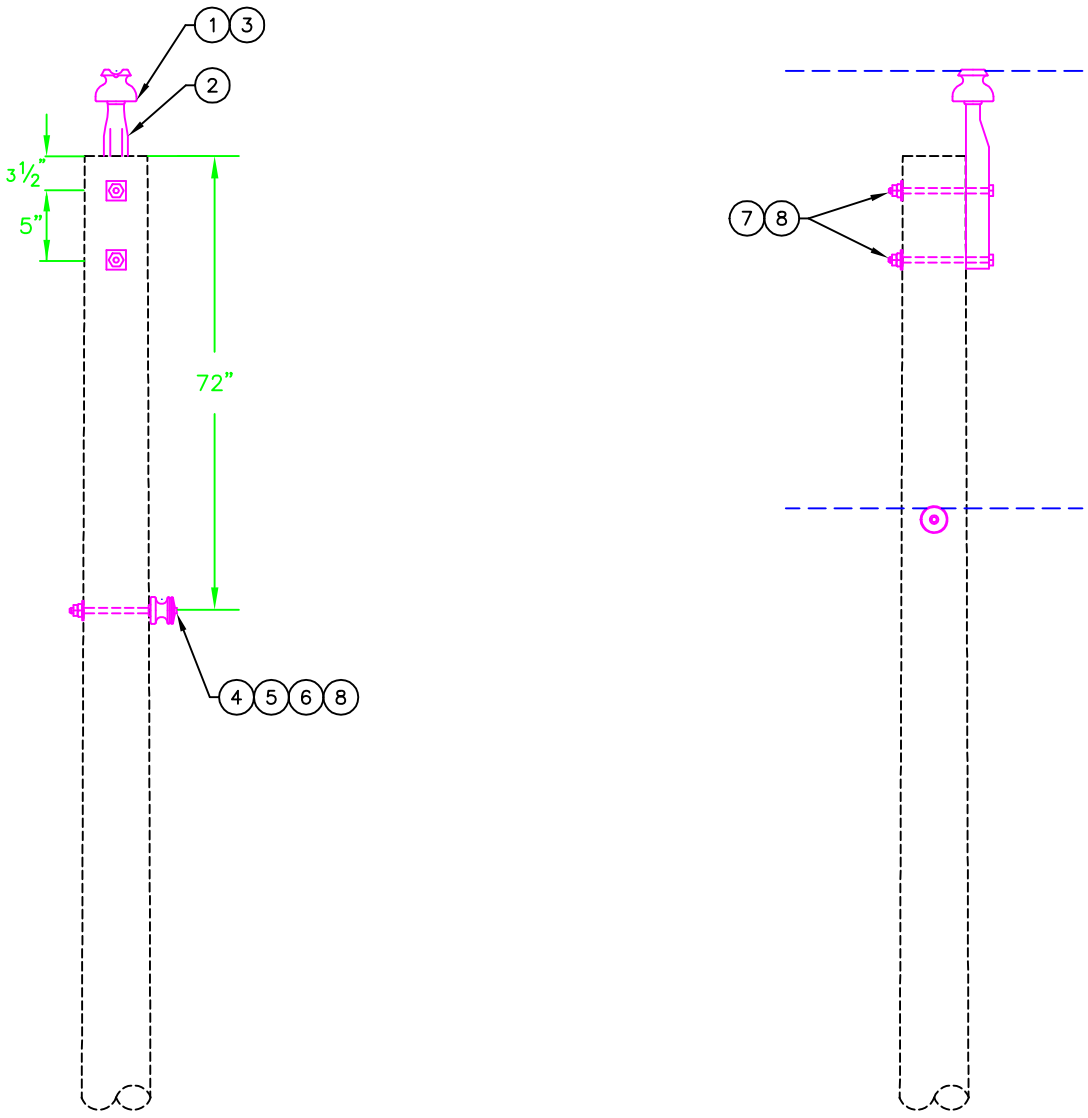

NOTES:

1) SEE DRAWINGS DN–GG AND DM–9 FOR INFORMATION AND MATERIALS RELATED TO GROUNDING.

DWG REF	QTY	LIST OF MATERIALS DESCRIPTION	STOCK #
1	1	INSULATORS, 15 kV PIN TYPE	203710
2	1	PIN, 18" POLE TOP	203430
3	1	PREFORMS, 1/0 WRAP TIE	203590
4	1	INSULATORS, SPOOL "J–151"	208280
5	1	BOLTS, 5/8" x 12" SPOOL	202000
6	1	PREFORMS, 1/0 SPOOL TIE	203650
7	2	BOLTS, 5/8" x 12"	202070
8	3	WASHERS, 2 1/4" SQUARE	204440

GREENVILLE UTILITIES COMMISSION
GREENVILLE, NORTH CAROLINA

Greenville Utilities

7.2KV PRIMARY, SINGLE PHASE
TANGENT, SINGLE PIN/POST

DWN.	JLS	DATE:	08/21/19
CKD.	KW	APPD.	
SCALE:	NONE		

DATE	REVISION	DATE	REVISION

DWG. NO.

A1

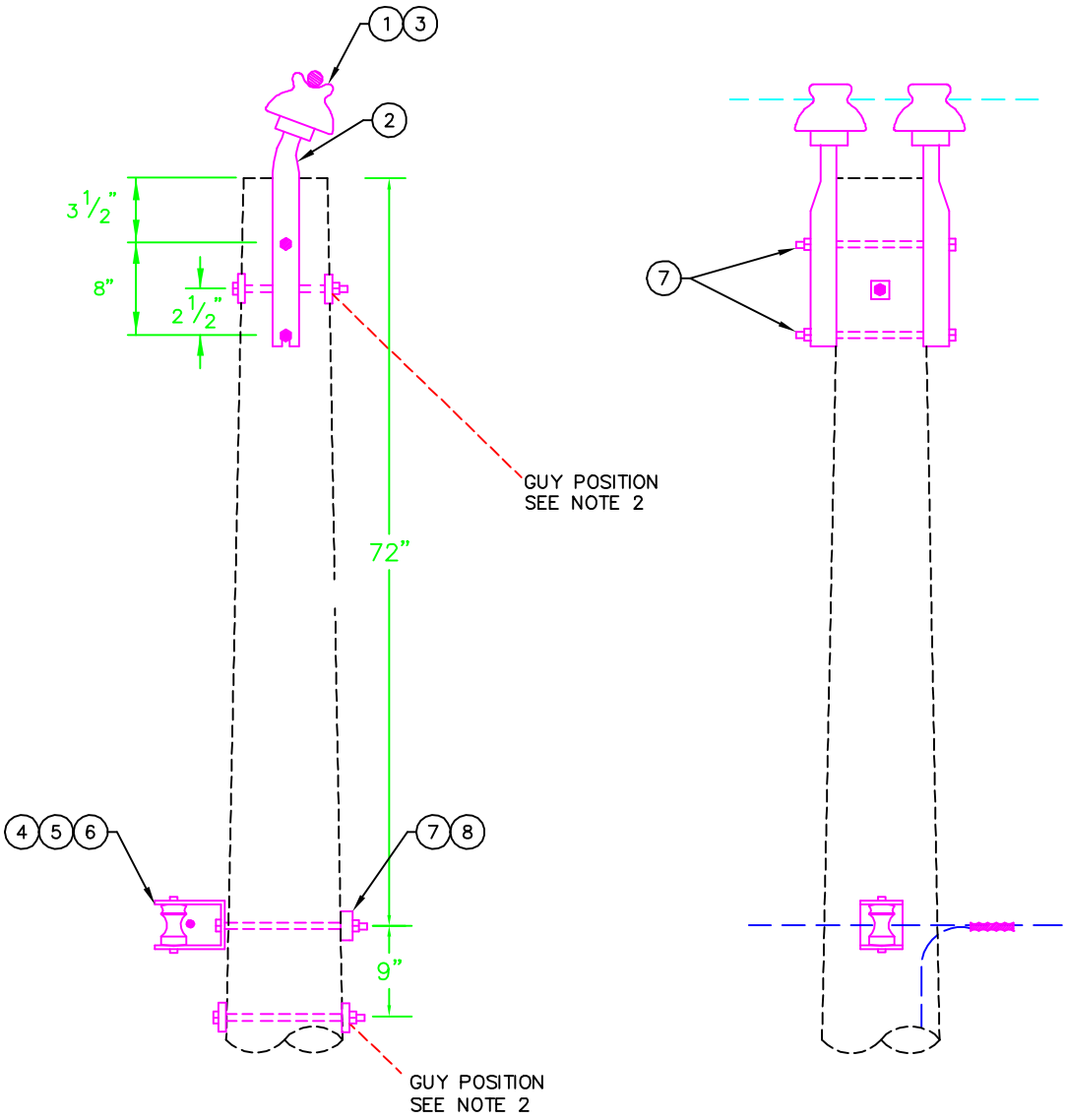

NOTES:

1) LINE ANGLE FOR A DOUBLE PIN INSULATOR SHOULD BE (1°–12°).

2) SEE DRAWINGS DG–12(14), DG–GG, AND DM–9 FOR INFORMATION AND MATERIALS RELATED TO GUYING AND GROUNDING.

DWG REF	QTY	LIST OF MATERIALS DESCRIPTION	STOCK #
1	2	INSULATORS, 15 kV PIN TYPE	203710
2	2	PIN, ANGLE POLE TOP	206000
3	1	PREFORMS, 1/0 DOUBLE SUPPORT	203580
4	1	INSULATORS, SPOOL "J–151"	208280
5	1	CLEVIS, 1342	208290
6	1	PREFORMS, 1/0 SPOOL TIE	203650
7	3	BOLTS, 5/8" x 12"	202070
8	1	WASHERS, 3 X 3 CURVED	204450

GREENVILLE UTILITIES COMMISSION
GREENVILLE, NORTH CAROLINA

Greenville Utilities

7.2KV PRIMARY, SINGLE PHASE
SMALL ANGLE, DOUBLE PIN OR POST

DWN.	JLS	DATE: 8/15/2019	
CKD.	KW	APPD.	
SCALE:	NTS		

DATE	REVISION	DATE	REVISION

DWG. NO.

A2

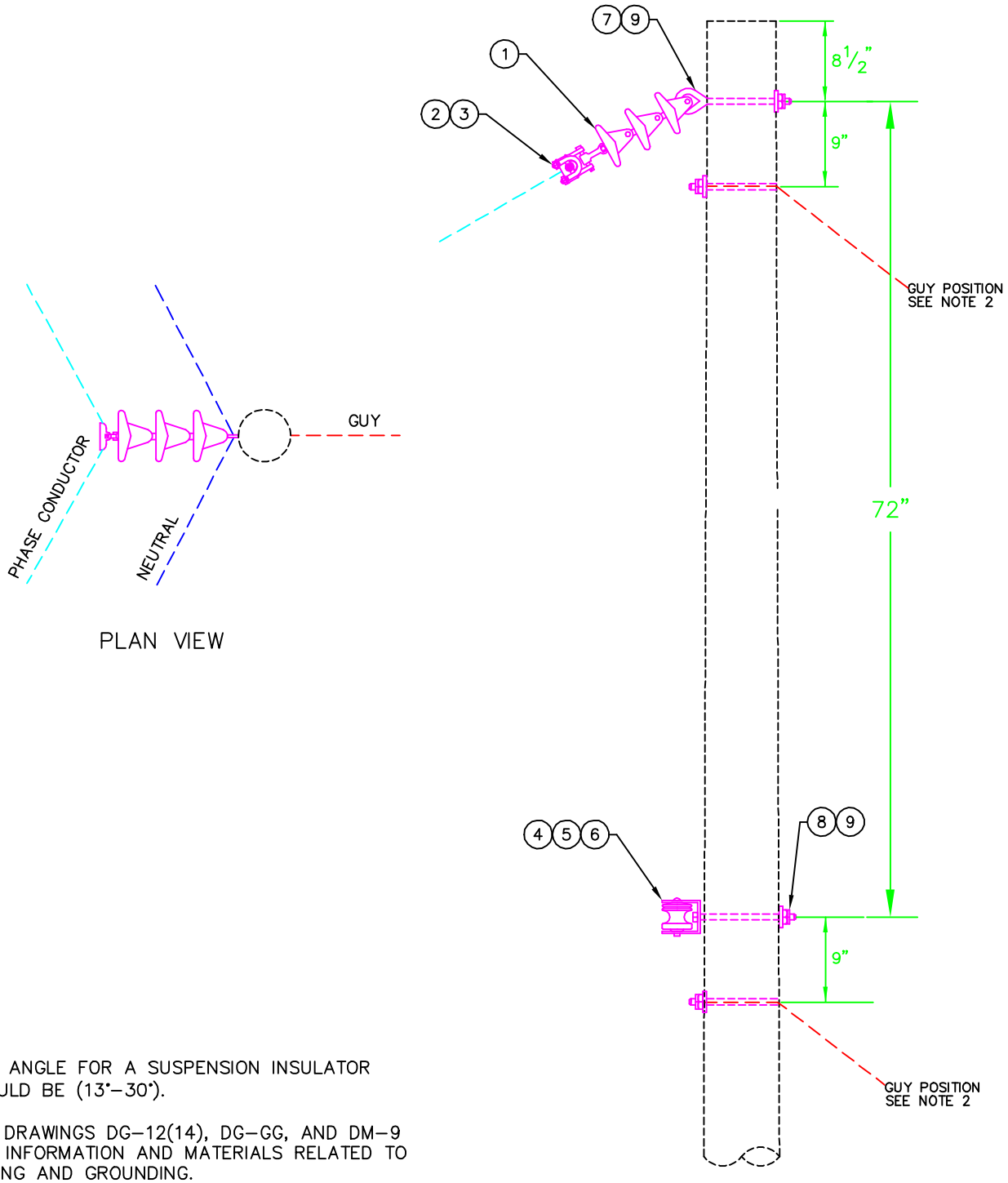

PLAN VIEW

NOTES:

1) LINE ANGLE FOR A SUSPENSION INSULATOR SHOULD BE (13°–30°).

2) SEE DRAWINGS DG–12(14), DG–GG, AND DM–9 FOR INFORMATION AND MATERIALS RELATED TO GUYING AND GROUNDING.

DWG REF	QTY	LIST OF MATERIALS DESCRIPTION	STOCK #
1	1	INSULATORS, POLYMER DEAD END BELLS	206920
2	1	CLAMPS, 1/0 SUSPENSION	202420
3	1	RODS, 1/0 ARMOR	201960
4	1	INSULATORS, SPOOL "J–151"	208280
5	1	CLEVIS, 1342	208290
6	1	PREFORMS, 1/0 SPOOL TIE	203650
7	1	BOLTS, 5/8" x 10" EYE	202280
8	1	BOLTS, 5/8" x 12"	202070
9	2	WASHERS, 3 X 3 CURVED	204450

GREENVILLE UTILITIES COMMISSION
GREENVILLE, NORTH CAROLINA

Greenville Utilities

7.2KV PRIMARY, SINGLE PHASE
LARGE ANGLE, SUSPENSION INSULATOR

DWN.	JLS	DATE:	08/21/2019
CKD.	KW	APPD.	
SCALE:	NONE		

DATE	REVISION	DATE	REVISION

DWG. NO.
A3

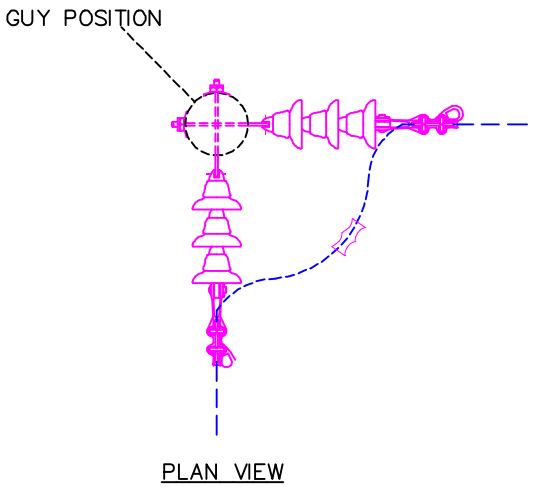

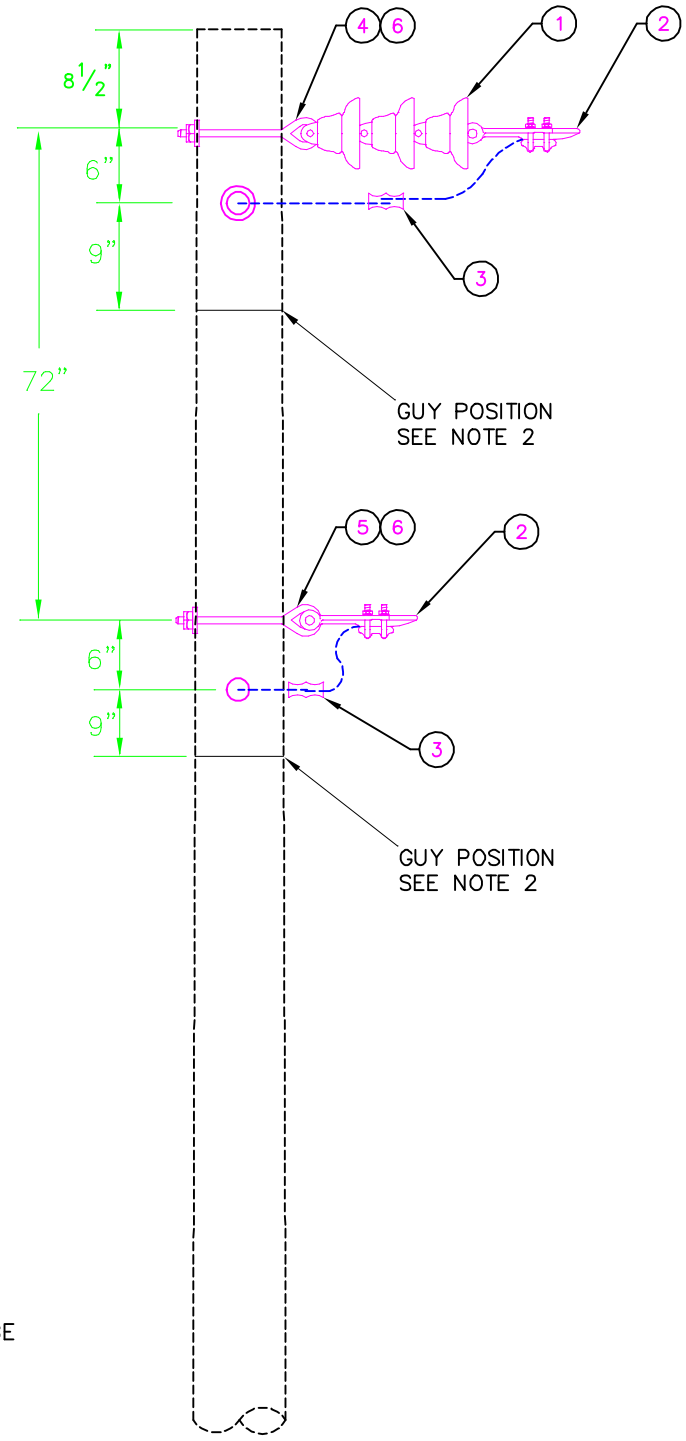

NOTES:

1) LINE ANGLE FOR A DOUBLE DEADEND SHOULD BE GREATER THAN 30°.

2) SEE DRAWINGS DG-12(14), DG-GG, AND DM-9 FOR INFORMATION AND MATERIALS RELATED TO GUYING AND GROUNDING.

DWG REF	QTY	LIST OF MATERIALS DESCRIPTION	STOCK #
1	2	INSULATORS, POLYMER DEAD END BELLS	206920
2	4	SHOE, #6 – 1/0 DEAD END	207570
3	2	SQUEEZONS, #4	203010
4	2	BOLTS, 5/8" x 10" EYE	202280
5	2	BOLTS, 5/8" x 12" EYE	202290
6	4	WASHERS, 3 X 3 CURVED	204450

GREENVILLE UTILITIES COMMISSION
GREENVILLE, NORTH CAROLINA

Greenville Utilities

7.2KV PRIMARY, SINGLE PHASE
LARGE ANGLE, DOUBLE DEADEND SUSPENSION

DWN.	JLS	DATE:	08/22/2019
CKD.	KW	APPD.	
SCALE:	NONE		

DATE	REVISION	DATE	REVISION

DWG. NO.

A4

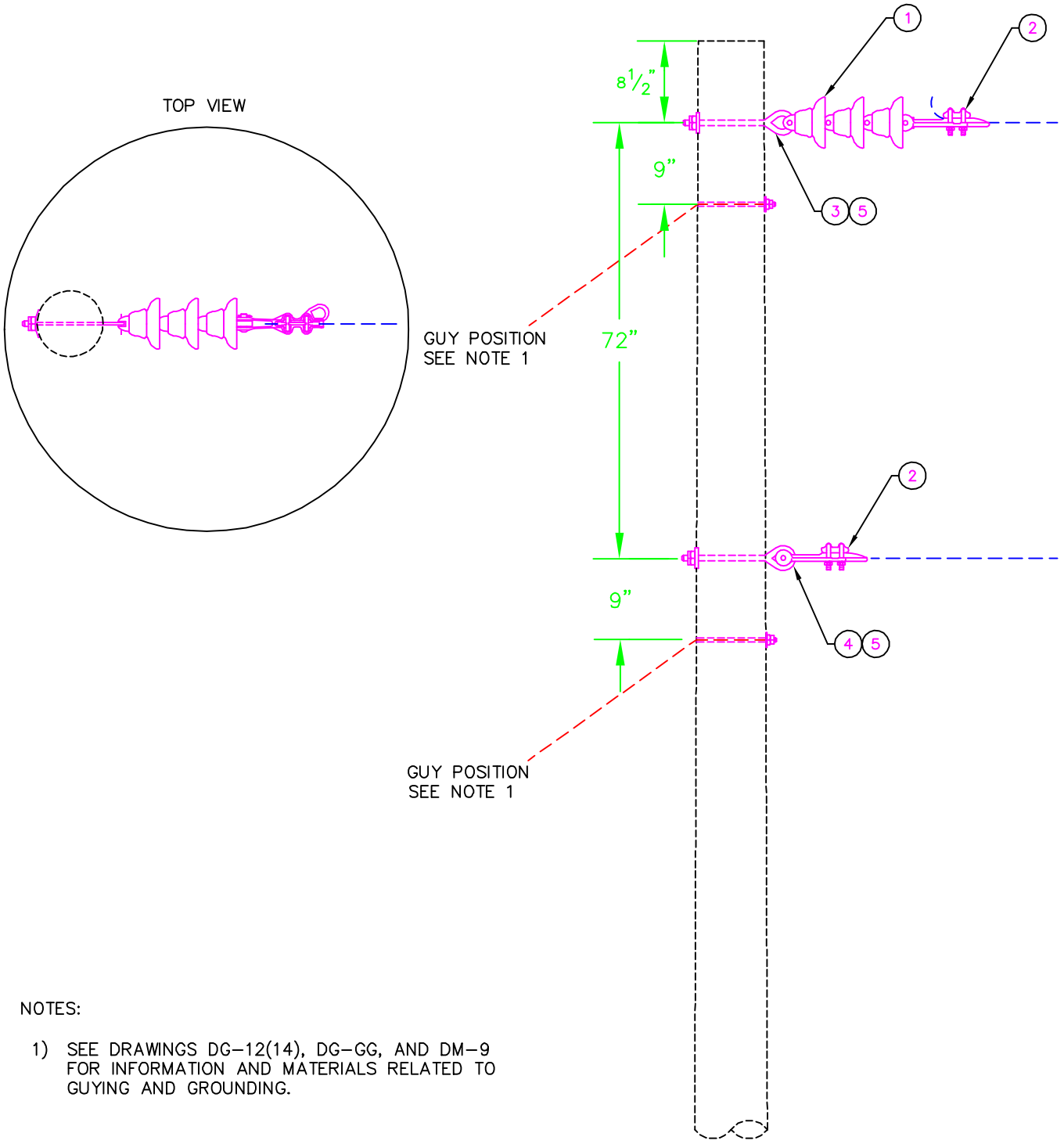

NOTES:

1) SEE DRAWINGS DG-12(14), DG-GG, AND DM-9 FOR INFORMATION AND MATERIALS RELATED TO GUYING AND GROUNDING.

DWG REF	QTY	LIST OF MATERIALS DESCRIPTION	STOCK #
1	1	INSULATORS, POLYMER DEAD END BELLS	206920
2	2	SHOE, #6 – 1/0 DEAD END	207570
3	1	BOLTS, 5/8" x 10" EYE	202280
4	1	BOLTS, 5/8" x 12" EYE	202290
5	2	WASHERS, 3 X 3 CURVED	204450

GREENVILLE UTILITIES COMMISSION
GREENVILLE, NORTH CAROLINA

Greenville Utilities

7.2KV PRIMARY, SINGLE PHASE
SINGLE DEADEND (TAP), SUSPENSION

DWN.	JLS	DATE:	08/21/2019
CKD.	KW	APPD.	
SCALE:	NONE		

DATE	REVISION	DATE	REVISION

DWG. NO.

A5

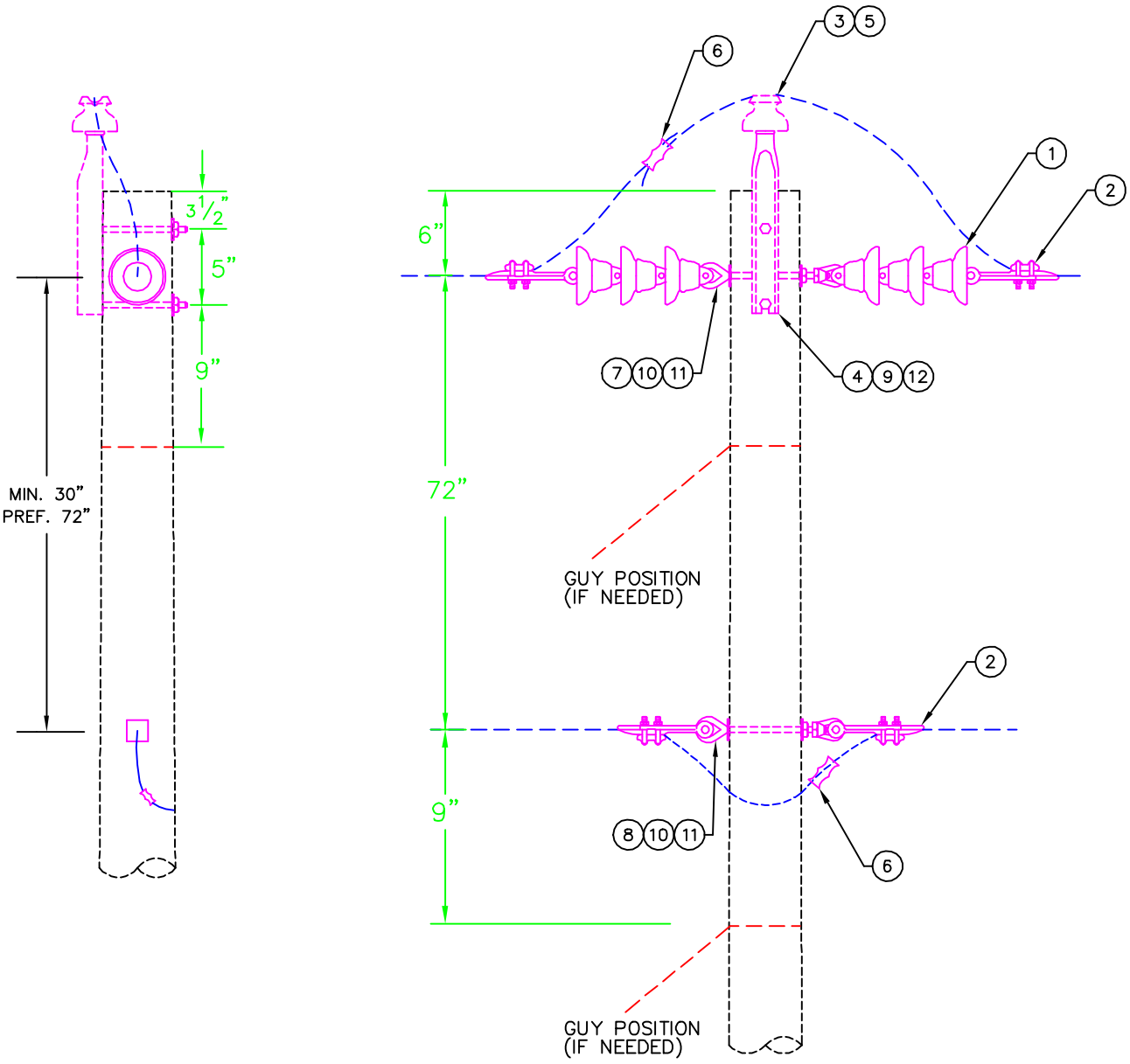

NOTES:

1) SEE DRAWINGS DG-12(14), DG-GG, AND DM-9 FOR INFORMATION AND MATERIALS RELATED TO GUYING AND GROUNDING.

DWG REF	QTY	LIST OF MATERIALS DESCRIPTION	STOCK #
1	2	INSULATORS, POLYMER DEAD END BELLS	206920
2	4	SHOE, #6 – 1/0 DEAD END	207570
3	1	INSULATORS, 15 kV PIN TYPE	203710
4	1	PIN, 18" POLE TOP	203430
5	1	PREFORMS, 1/0 WRAP TIE	203590
6	2	SQUEEZONS, #4	203010
7	1	BOLTS, 5/8" x 10" EYE	202280
8	1	BOLTS, 5/8" x 12" EYE	202290
9	2	BOLTS, 5/8" x 12"	202070
10	2	NUTS, 5/8" EYE	204420
11	2	WASHERS, 3 X 3 CURVED	204450
12	2	2 1/4" SQUARE WASHER	204440

GREENVILLE UTILITIES COMMISSION
GREENVILLE, NORTH CAROLINA

Greenville Utilities

7.2KV PRIMARY, SINGLE PHASE
TANGENT, DOUBLE DEADEND SUSPENSION

DWN.	JLS	DATE:	08/22/2019
CKD.	KW	APPD.	
SCALE:	NONE		

DATE	REVISION	DATE	REVISION

DWG. NO.

A6

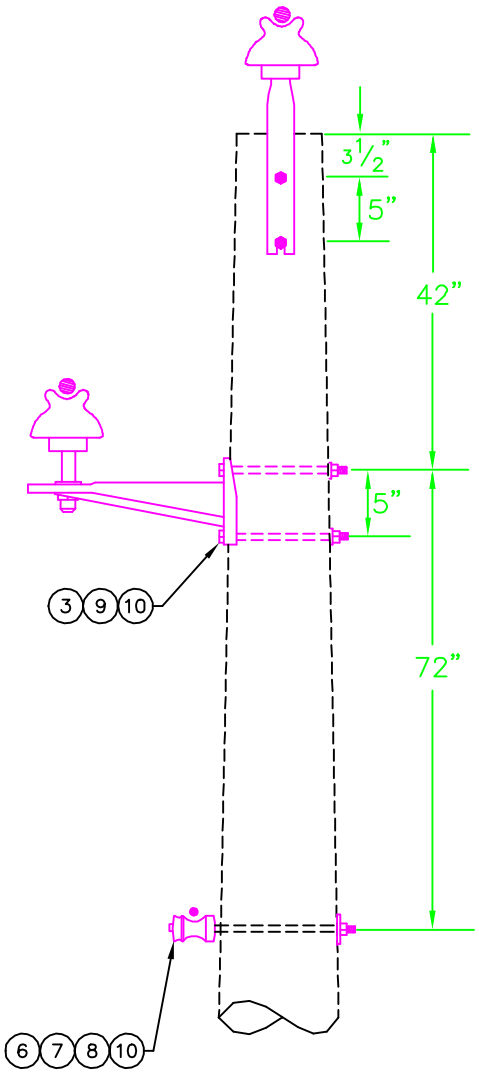

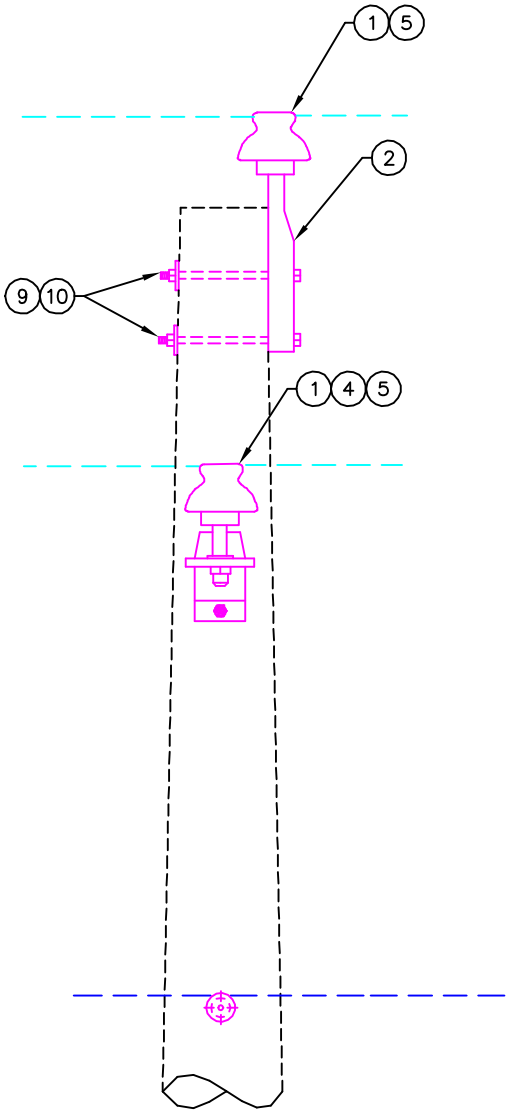

NOTES:

1) SEE DRAWINGS DN–GG AND DM–9 FOR INFORMATION AND MATERIALS RELATED GROUNDING.

DWG REF	QTY	LIST OF MATERIALS DESCRIPTION	STOCK #
1	2	INSULATORS, 15 kV PIN TYPE	203710
2	1	PIN, 18" POLE TOP	203430
3	1	BRACKETS, MIF	203420
4	1	PIN, SHANK	203440
5	2	PREFORMS, 1/0 WRAP TIE	203590
6	1	INSULATORS, SPOOL "J–151"	208280
7	1	BOLTS, 5/8" x 12" SPOOL	202000
8	1	PREFORMS, 1/0 SPOOL TIE	203650
9	4	BOLTS, 5/8" x 12"	202070
10	5	WASHERS, 2 1/4" SQUARE	204440

GREENVILLE UTILITIES COMMISSION
GREENVILLE, NORTH CAROLINA

Greenville Utilities

12.47/7.2KV PRIMARY, TWO PHASE
TANGENT, MIF CONSTUCTION SINGLE PIN

DWN.	JLS	DATE:	08/23/2019
CKD.	EGS	APPD.	
SCALE:	NTS		

DATE	REVISION	DATE	REVISION

DWG. NO.

B1

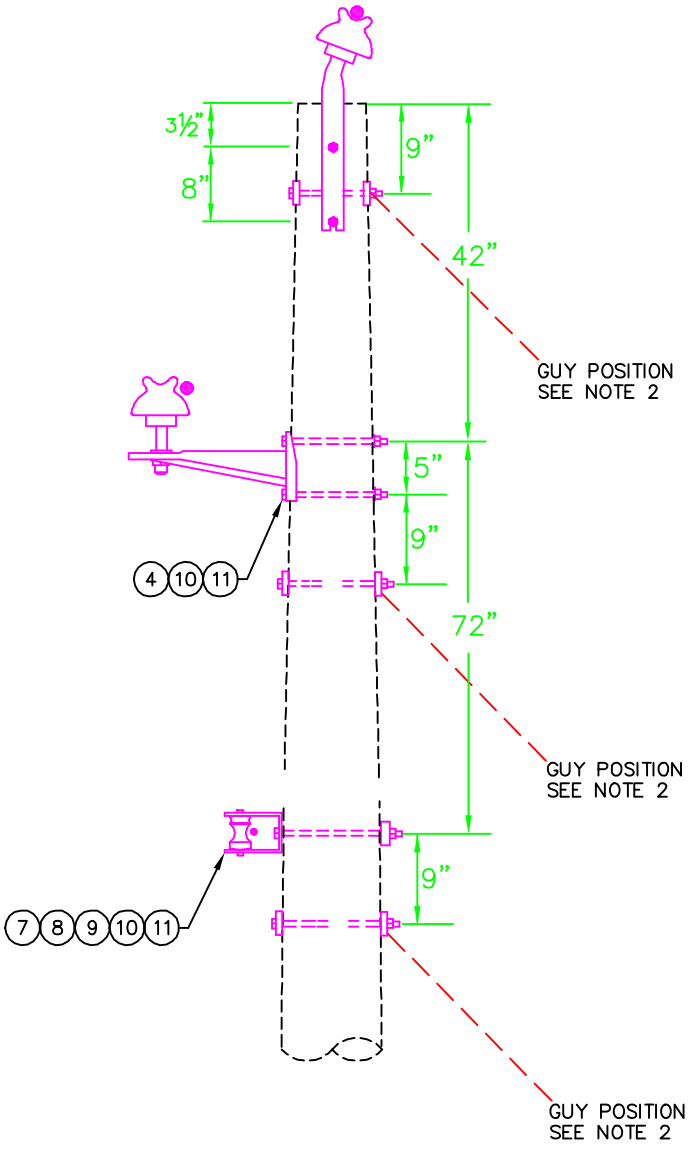

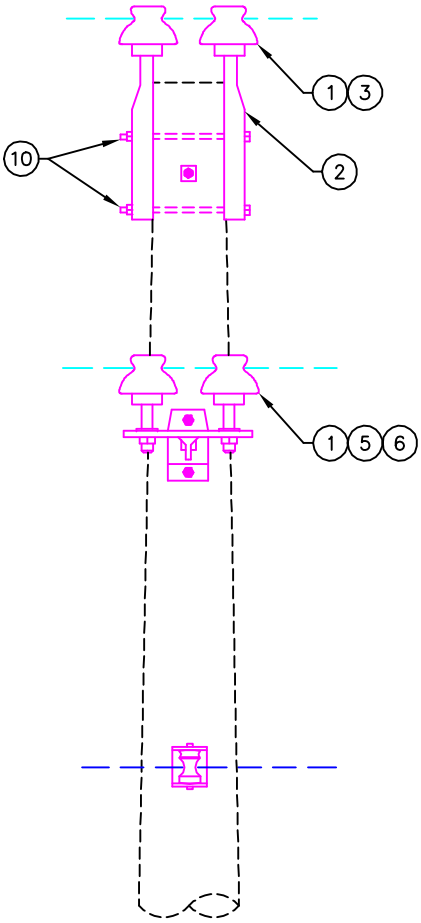

NOTES:

1) LINE ANGLE FOR A DOUBLE PIN INSULATOR SHOULD BE (1°–12°).

2) SEE DRAWINGS DG–12(14), DG–GG, AND DM–9 FOR INFORMATION AND MATERIALS RELATED TO GUYING AND GROUNDING.

DWG REF	QTY	LIST OF MATERIALS DESCRIPTION	STOCK #
1	4	INSULATORS, 15 kV PIN TYPE	203710
2	2	PIN, ANGLE POLE TOP	206000
3	1	PREFORMS, 1/0 DOUBLE SUPPORT	203580
4	1	BRACKETS, MIF	203420
5	2	PIN, SHANK	203440
6	1	PREFORMS, 1/0 DOUBLE SIDE TIE	203540
7	1	INSULATORS, SPOOL "J–151"	208280
8	1	CLEVIS, 1342	208290
9	1	PREFORMS, 1/0 SPOOL TIE	203650
10	5	BOLTS, 5/8" x 12"	202070
11	3	WASHERS, 3 X 3 CURVED	204450

GREENVILLE UTILITIES COMMISSION
GREENVILLE, NORTH CAROLINA

Greenville Utilities

12.47/7.2KV PRIMARY, TWO PHASE
SMALL ANGLE, MIF CONSTRUCTION DOUBLE PIN

DWN.	JLS	DATE: 08/23/2019	
CKD.	KW	APPD.	
SCALE:	NTS		
DATE	REVISION	DATE	REVISION

DWG. NO.
B2

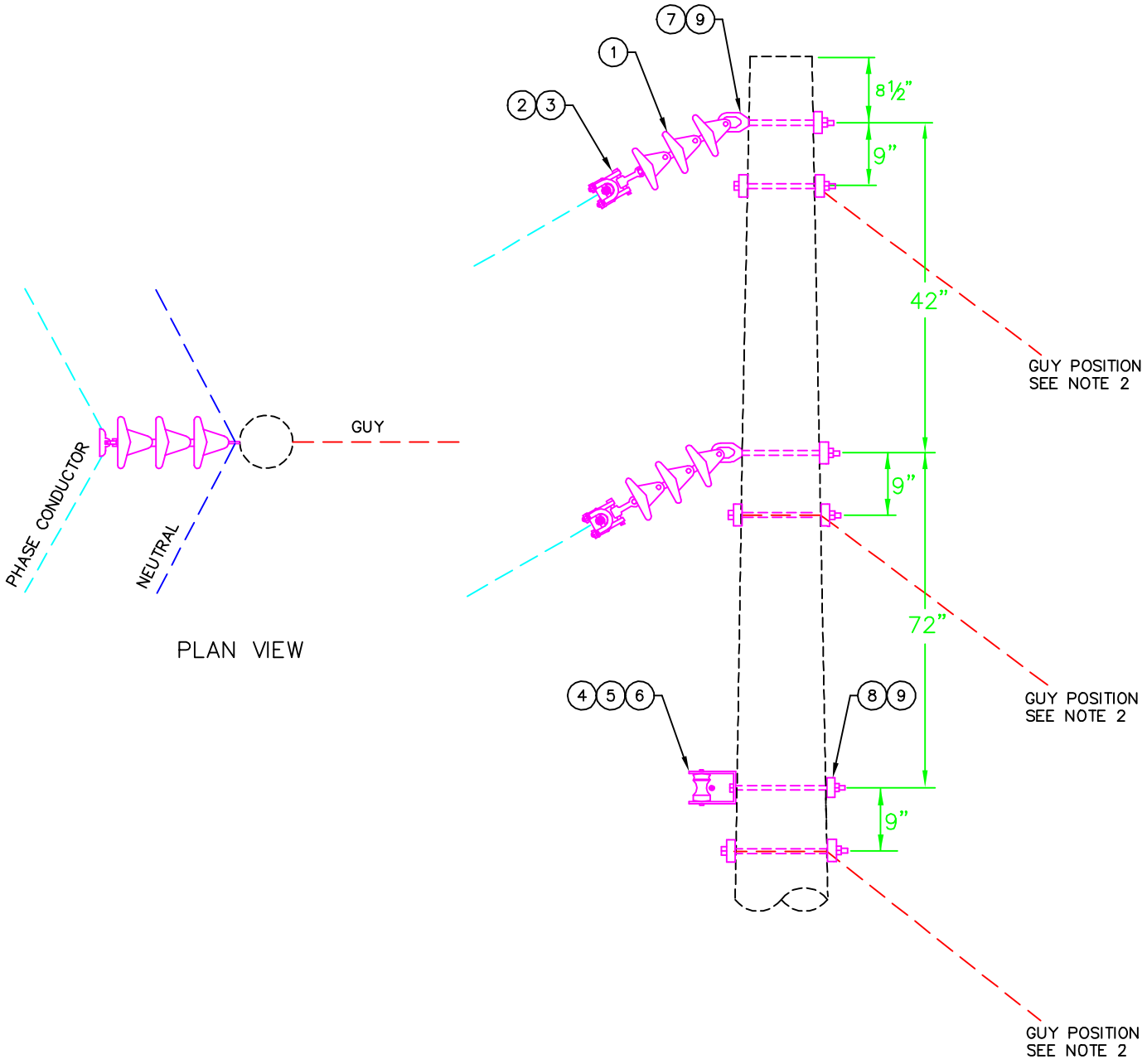

NOTES:

1) LINE ANGLE FOR A SUSPENSION INSULATOR SHOULD BE (13°–30°).

2) SEE DRAWINGS DG–12(14), DG–GG, AND DM–9 FOR INFORMATION AND MATERIALS RELATED TO GUYING AND GROUNDING.

DWG REF	QTY	LIST OF MATERIALS DESCRIPTION	STOCK #
1	2	INSULATORS, POLYMER DEAD END BELLS	206920
2	2	CLAMPS, 1/0 SUSPENSION	202420
3	2	RODS, 1/0 ARMOR	201960
4	1	INSULATORS, SPOOL "J–151"	208280
5	1	CLEVIS, 1342	208290
6	1	PREFORMS, 1/0 SPOOL TIE	203650
7	2	BOLTS, 5/8" x 12" EYE	202290
8	1	BOLTS, 5/8" x 12"	202070
9	3	WASHERS, 3 X 3 CURVED	204450

GREENVILLE UTILITIES COMMISSION
GREENVILLE, NORTH CAROLINA

Greenville Utilities

12.47/7.2KV PRIMARY, TWO PHASE
LARGE ANGLE, SUSPENSION INSULATOR

DWN.	JLS	DATE:	08/23/2019
CKD.	KW	APPD.	
SCALE:	NTS		

DATE	REVISION	DATE	REVISION

DWG. NO.

B3

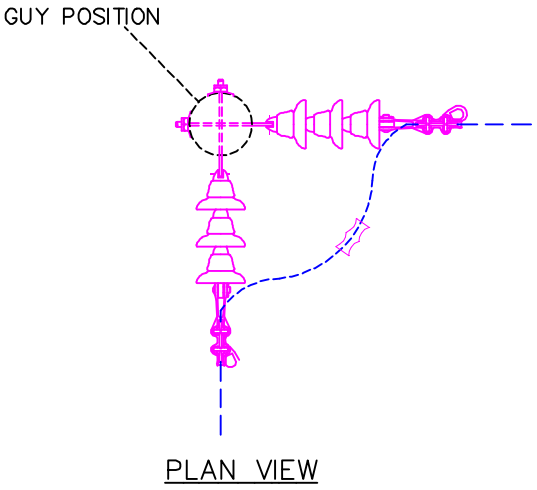

PLAN VIEW

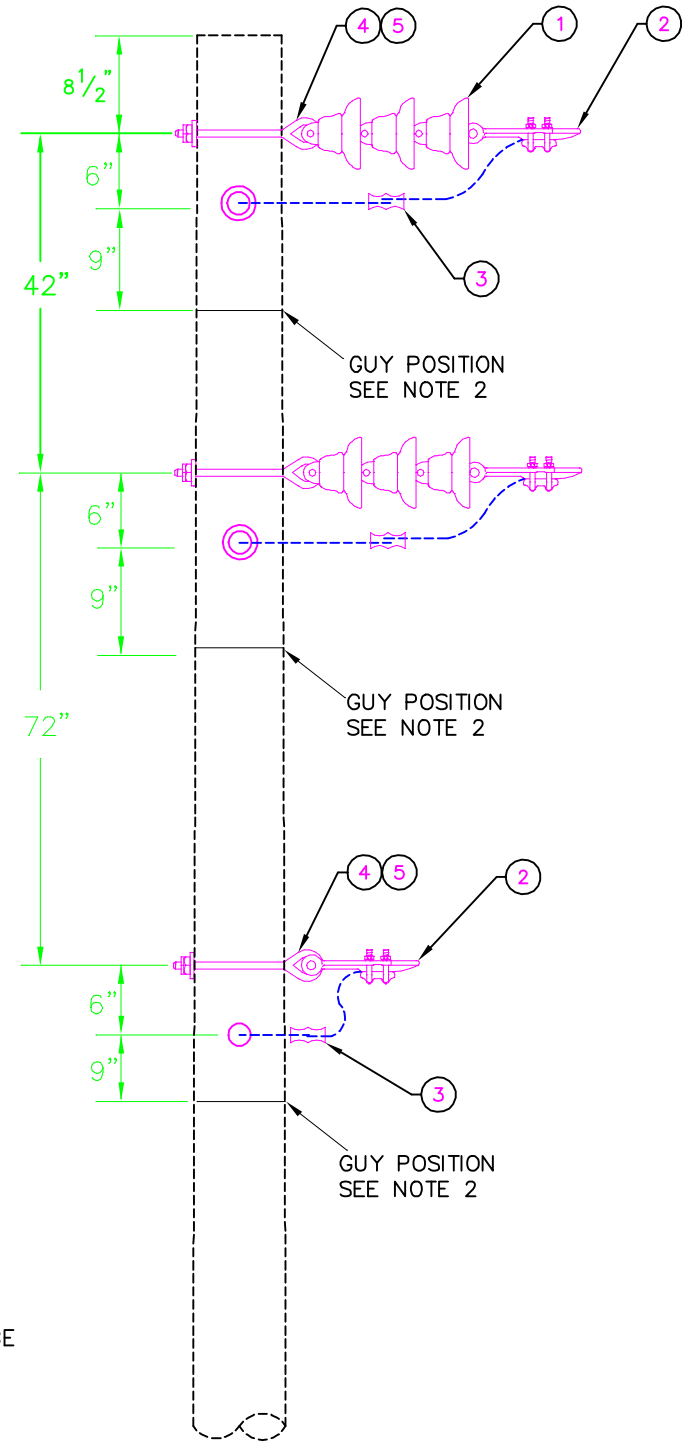

NOTES:

1) LINE ANGLE FOR A DOUBLE DEADEND SHOULD BE GREATER THAN 30°.

2) SEE DRAWINGS DG-12(14), DG-GG, AND DM-9 FOR INFORMATION AND MATERIALS RELATED TO GUYING AND GROUNDING.

DWG REF	QTY	LIST OF MATERIALS DESCRIPTION	STOCK #
1	4	INSULATORS, POLYMER DEAD END BELLS	206920
2	6	SHOE, #6 – 1/0 DEAD END	207570
3	3	SQUEEZONS, #4	203010
4	6	BOLTS, 5/8" x 12" EYE	202290
5	6	WASHERS, 3 X 3 CURVED	204450

GREENVILLE UTILITIES COMMISSION
GREENVILLE, NORTH CAROLINA

Greenville Utilities

12.47/7.2KV PRIMARY, TWO PHASE
LARGE ANGLE, DOUBLE DEADEND SUSPENSION

DWN.	JLS	DATE:	08/23/2019
CKD.	KW	APPD.	
SCALE:	NONE		

DATE	REVISION	DATE	REVISION

DWG. NO.

B4

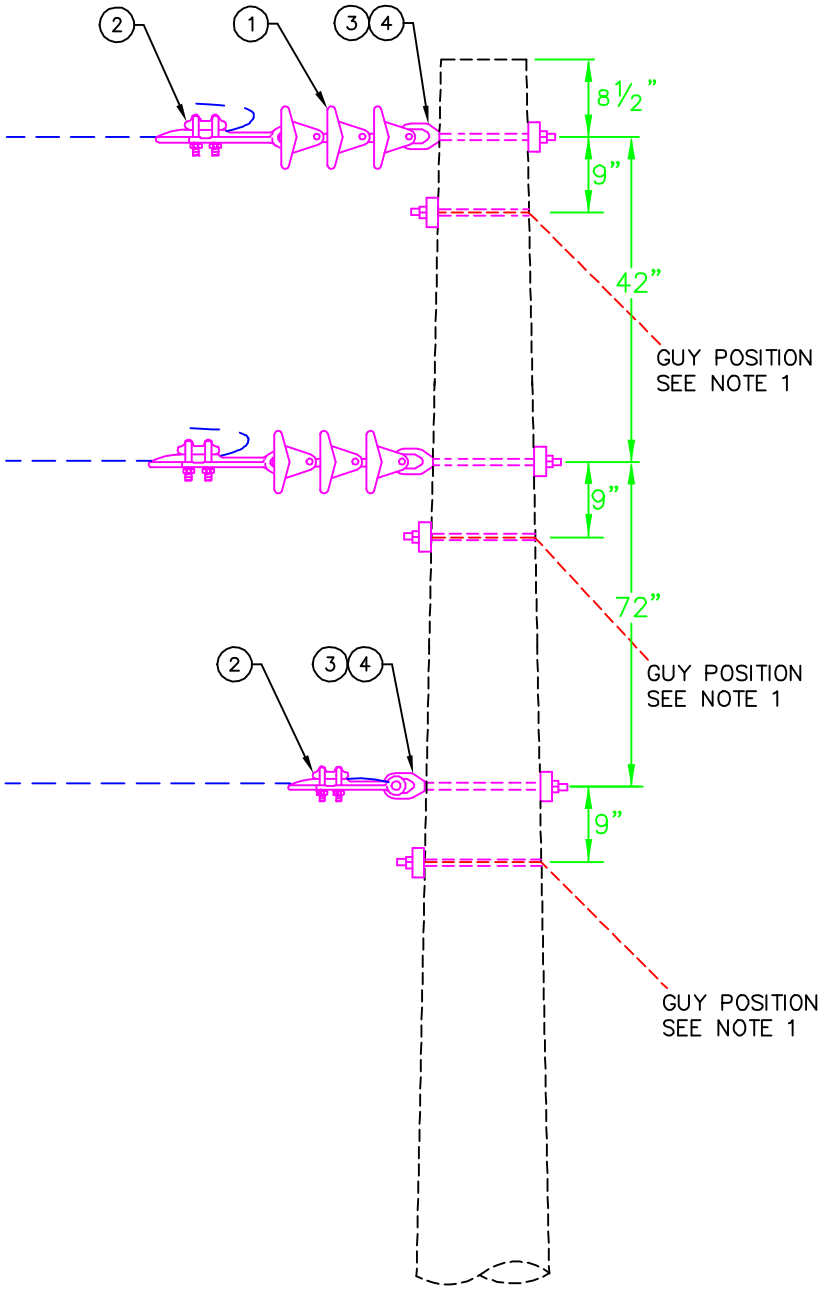

NOTES:

1) SEE DRAWINGS DG-12(14), DG-GG, AND DM-9 FOR INFORMATION AND MATERIALS RELATED TO GUYING AND GROUNDING.

DWG REF	QTY	LIST OF MATERIALS DESCRIPTION	STOCK #
1	2	INSULATORS, POLYMER DEAD END BELLS	206920
2	3	SHOE, #6 – 1/0 DEAD END	207570
3	3	BOLTS, 5/8" x 12" EYE	202290
4	3	WASHERS, 3 X 3 CURVED	204450

GREENVILLE UTILITIES COMMISSION
GREENVILLE, NORTH CAROLINA

Greenville Utilities

12.47/7.2KV PRIMARY, TWO PHASE
SINGLE DEADEND (TAP), SUSPENSION

DWN.	JLS	DATE:	08/26/2019
CKD.	KW	APPD.	
SCALE:	NONE		

DATE	REVISION	DATE	REVISION

DWG. NO.

B5

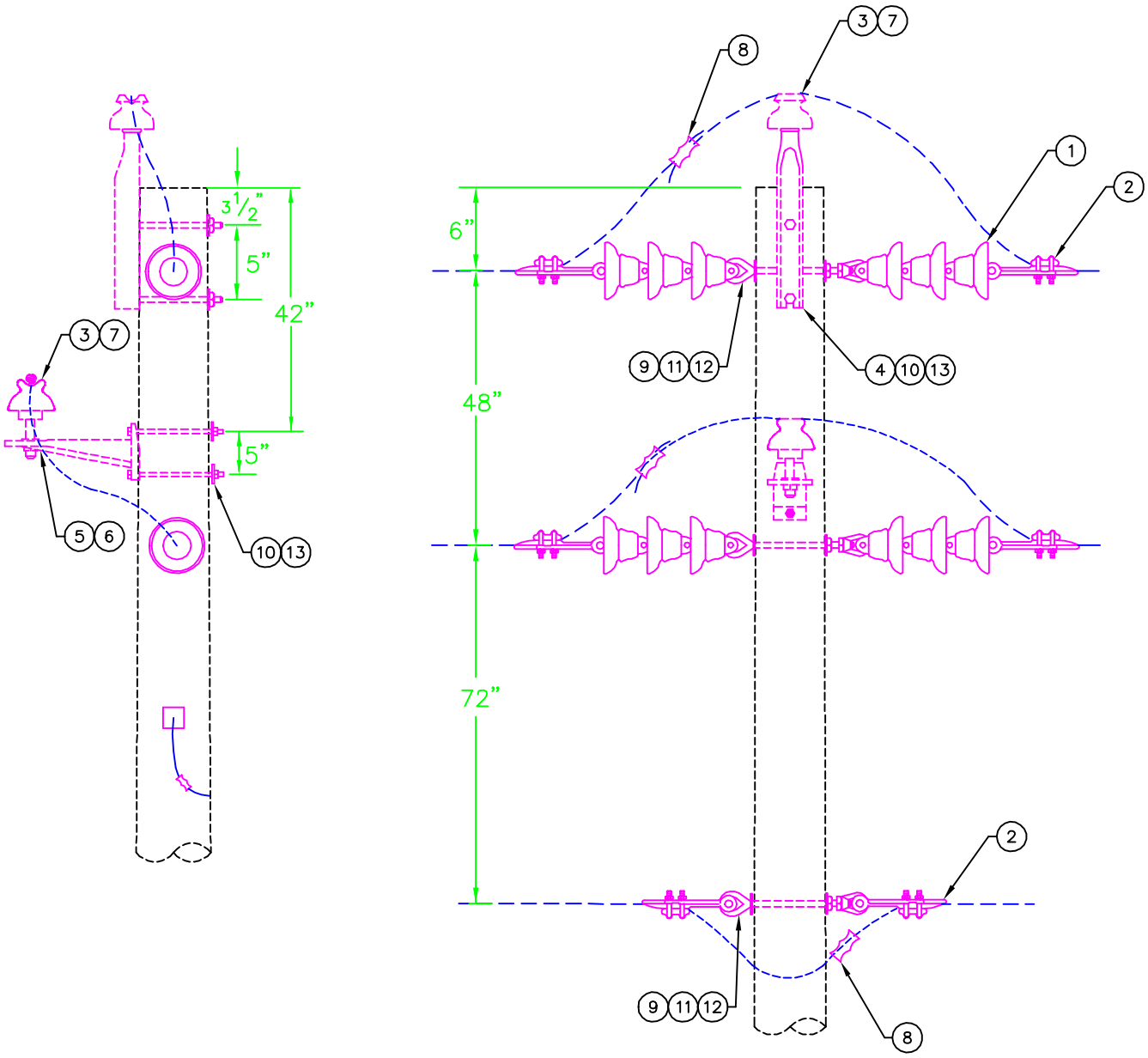

NOTES:

1) SEE DRAWINGS DN–GG AND DM–9 FOR INFORMATION AND MATERIALS RELATED TO GUYING AND GROUNDING.

DWG REF	QTY	LIST OF MATERIALS DESCRIPTION	STOCK #
1	4	INSULATORS, POLYMER DEAD END BELLS	206920
2	6	SHOE, #6 – 1/0 DEAD END	207570
3	2	INSULATORS, 15 kV PIN TYPE	203710
4	1	PIN, 18" POLE TOP	203430
5	1	BRACKETS, MIF	203420
6	1	PIN, SHANK	203440
7	2	PREFORMS, 1/0 WRAP TIE	203590
8	3	SQUEEZONS, #4	203010
9	3	BOLTS, 5/8" x 12" EYE	202290
10	4	BOLTS, 5/8" x 12"	202070
11	3	NUTS, 5/8" EYE	204420
12	3	WASHERS, 3 X 3 CURVED	204450
13	4	2 1/4" SQUARE WASHER	204440

GREENVILLE UTILITIES COMMISSION
GREENVILLE, NORTH CAROLINA

Greenville Utilities

12.47/7.2KV PRIMARY, TWO PHASE
TANGENT, DOUBLE DEADEND SUSPENSION

DWN.	JLS	DATE: 08/26/2019	
CKD.	KW	APPD.	
SCALE:	NONE		
DATE	REVISION	DATE	REVISION

DWG. NO.

B6

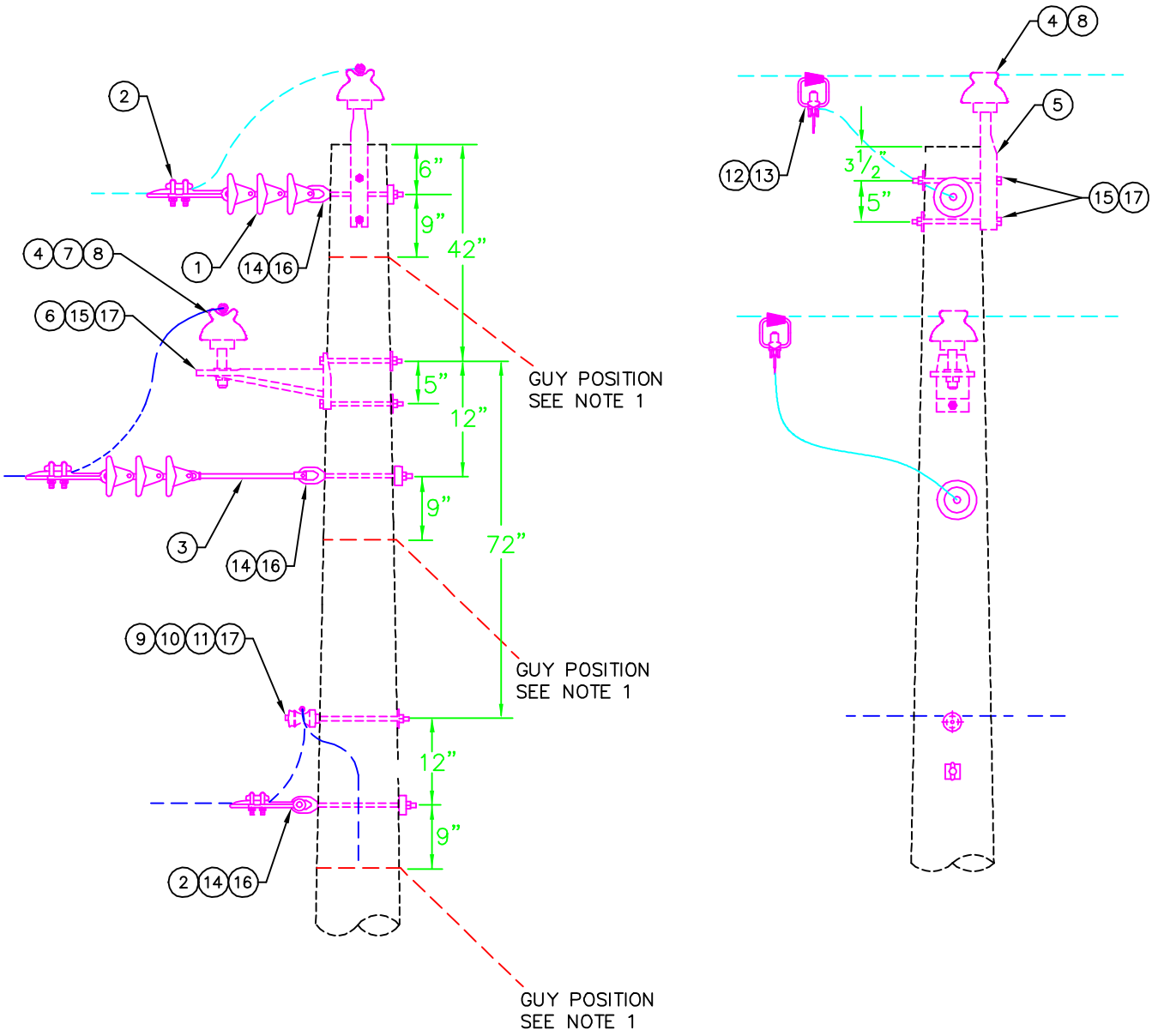

DWG REF	QTY	LIST OF MATERIALS DESCRIPTION	STOCK #
1	2	INSULATORS, POLYMER DEAD END BELLS	206920
2	3	SHOE, #6 – 1/0 DEAD END	207570
3	1	EXTENSION, 14" LINKS	210340
4	1	INSULATORS, 15 kV PIN TYPE	203710
5	1	PIN, 18" POLE TOP	203430
6	1	BRACKETS, MIF	203420
7	1	PIN, SHANK	203440
8	2	PREFORMS, 1/0 WRAP TIE	203590
9	1	INSULATORS, SPOOL "J-151"	208280
10	1	BOLTS, 5/8" x 12" SPOOL	202000
11	1	PREFORMS, 1/0 SPOOL TIE	203650
12	2	CLAMPS, 1/0 SINGLE STIRRUP	202390
13	2	TAPS, HOT LINE CLAMPS	202350
14	3	BOLTS, 5/8" x 12" EYE	202290
15	4	BOLTS, 5/8" x 12"	202070
16	3	WASHERS, 3 X 3 CURVED	204450
17	5	2 1/4" SQUARE WASHER	204440

NOTES:

1) SEE DRAWINGS DG-12(14), DG-GG, AND DM-9 FOR INFORMATION AND MATERIALS RELATED TO GUYING AND GROUNDING.

2) BOND TAP NEUTRAL TO MAIN LINE NEUTRAL AND POLE GROUND. SEE DN-GG FOR DETAILS.

GREENVILLE UTILITIES COMMISSION
GREENVILLE, NORTH CAROLINA

Greenville Utilities

12.47/7.2KV PRIMARY, TWO PHASE
TANGENT WITH TWO PHASE DEAD END TAP

DWN.	JLS	DATE: 08/26/2019	DWG. NO.
CKD.	KW	APPD.	
SCALE:	NONE		B7

DATE	REVISION	DATE	REVISION

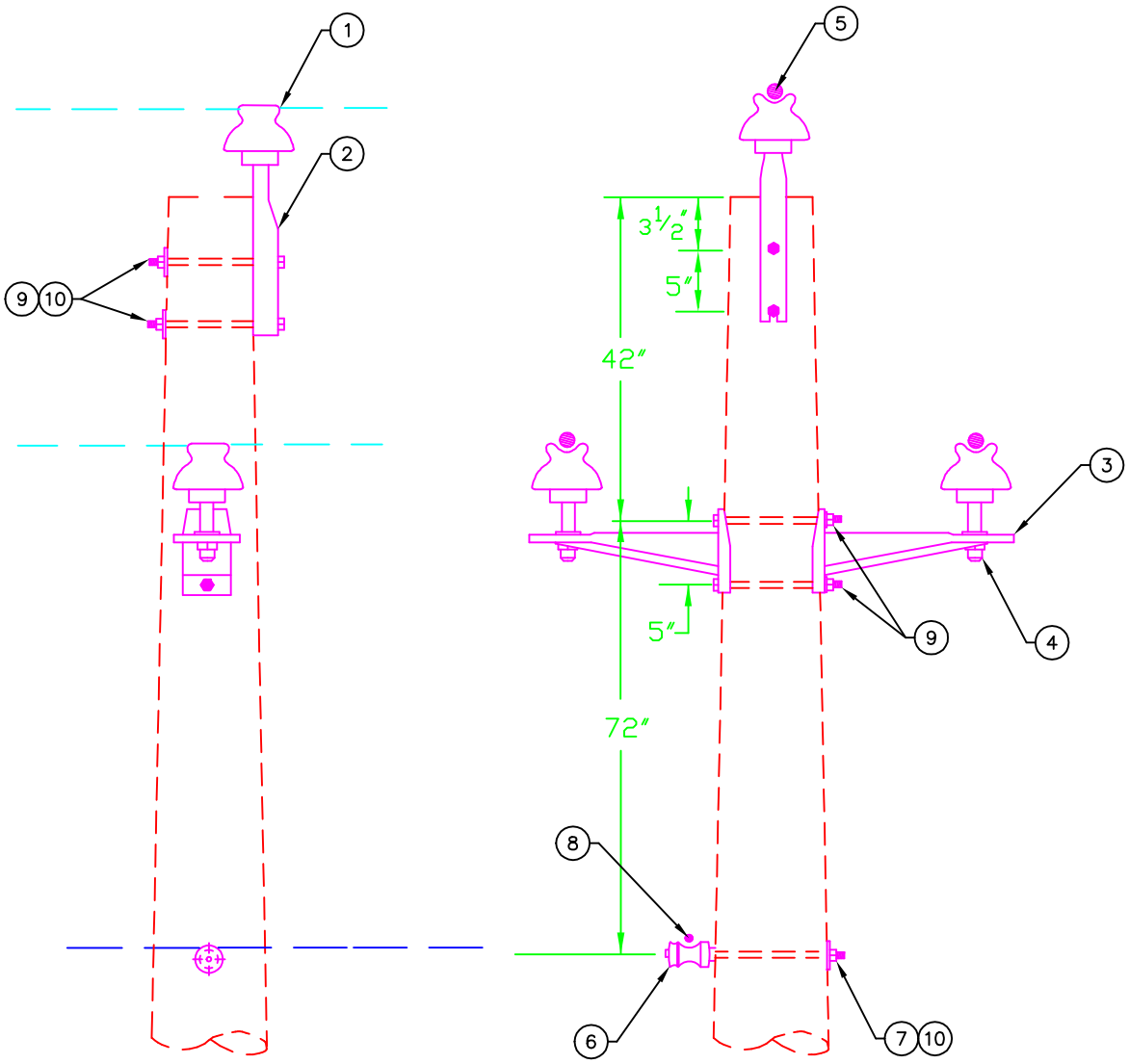

NOTES:

1) SEE DRAWINGS DN–GG AND DM–9 FOR INFORMATION AND MATERIALS RELATED GROUNDING.

2) MATERIAL VARIES WITH CONDUCTOR SIZE (1/0, 336, AND 795). SEE MATERIALS LIST FOR DETAILS.

DWG REF	QTY 1/0	QTY 336	QTY 795	LIST OF MATERIALS DESCRIPTION	STOCK#
1	3	3	–	INSULATORS, 15 kV PIN TYPE	203710
1	–	–	3	INSULATOR, 25 kV POST TYPE	207720
2	1	1	–	PIN, 18" POLE TOP	203430
2	–	–	1	BRACKET, 35 kV POLE TOP	207890
3	2	2	2	BRACKETS, MIF	203420
4	2	2	–	PIN, SHANK	203440
4	–	–	3	BOLTS, 3/4" x 3/4" STUD	210361
5	3	–	–	PREFORMS, 1/0 WRAP TIE	203590
5	–	3	–	PREFORMS, 336 WRAP LOCK TIE	203600
5	–	–	3	PREFORMS, 795 WRAP LOCK TIE	203660
6	1	1	1	INSULATORS, SPOOL "J–151"	208280
7	1	1	1	BOLTS, 5/8" x 12" SPOOL	202000
8	1	1	–	PREFORMS, 1/0 SPOOL TIE	203650
8	–	–	1	PREFORMS, 336 SPOOL TIE	207580
9	4	4	4	BOLTS, 5/8" x 12"	202070
10	3	3	3	WASHERS, 2 1/4" SQUARE	204440

GREENVILLE UTILITIES COMMISSION
GREENVILLE, NORTH CAROLINA

Greenville Utilities

12.47/7.2KV PRIMARY, THREE PHASE
TANGENT, MIF CONSTRUCTION SINGLE PIN

DWN.	JLS	DATE: 08/27/2019	
CKD.	KW	APPD.	
SCALE:	NTS		

DATE	REVISION	DATE	REVISION

DWG. NO.

C1

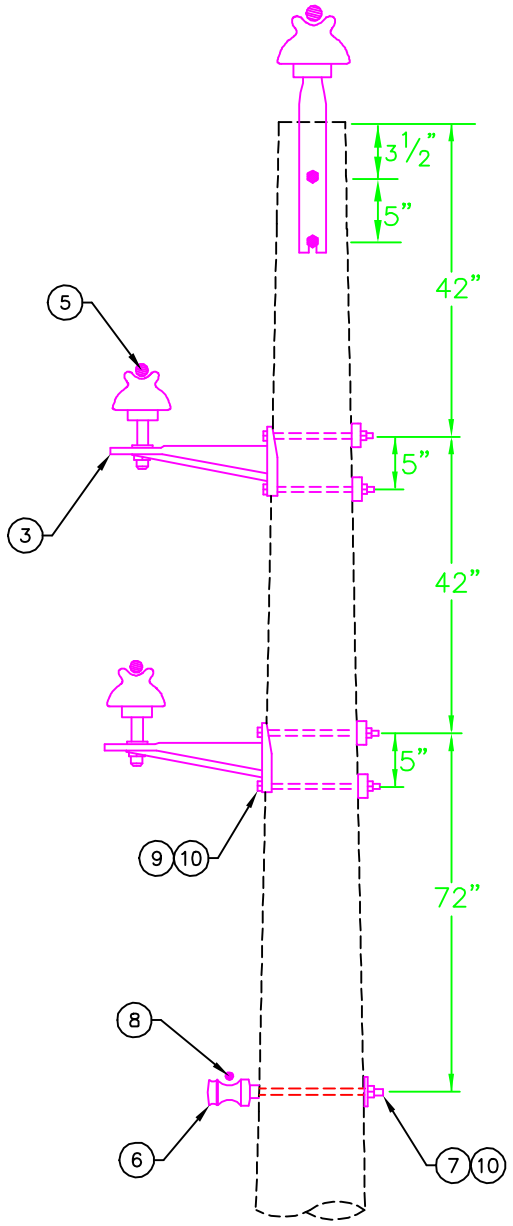

NOTES:

1) SEE DRAWINGS DN–GG AND DM–9 FOR INFORMATION AND MATERIALS RELATED GROUNDING.

2) MATERIAL VARIES WITH CONDUCTOR SIZE (1/0, 336, AND 795). SEE MATERIALS LIST FOR DETAILS.

DWG REF	QTY 1/0	QTY 336	QTY 795	LIST OF MATERIALS DESCRIPTION	STOCK#
1	3	3	–	INSULATORS, 15 kV PIN TYPE	203710
1	–	–	3	INSULATOR, 25 kV POST TYPE	207720
2	1	1	–	PIN, 18" POLE TOP	203430
2	–	–	1	BRACKET, 35 kV POLE TOP	207890
3	2	2	2	BRACKETS, MIF	203420
4	2	2	–	PIN, SHANK	203440
4	–	–	3	BOLTS, 3/4" x 3/4" STUD	210361
5	3	–	–	PREFORMS, 1/0 WRAP TIE	203590
5	–	3	–	PREFORMS, 336 WRAP LOCK TIE	203600
5	–	–	3	PREFORMS, 795 WRAP LOCK TIE	203660
6	1	1	1	INSULATORS, SPOOL "J–151"	208280
7	1	1	1	BOLTS, 5/8" x 12" SPOOL	202000
8	1	1	–	PREFORMS, 1/0 SPOOL TIE	203650
8	–	–	1	PREFORMS, 336 SPOOL TIE	207580
9	6	6	6	BOLTS, 5/8" x 12"	202070
10	7	7	7	WASHERS, 2 1/4" SQUARE	204440

GREENVILLE UTILITIES COMMISSION
GREENVILLE, NORTH CAROLINA

Greenville Utilities

12.47/7.2KV PRIMARY, THREE PHASE
TANGENT, MIF VERTICAL SINGLE PIN, POLE TOP

DWN.	JLS	DATE: 08/28/2019	
CKD.	KW	APPD.	
SCALE:	NTS		

DATE	REVISION	DATE	REVISION

DWG. NO.

C1.V

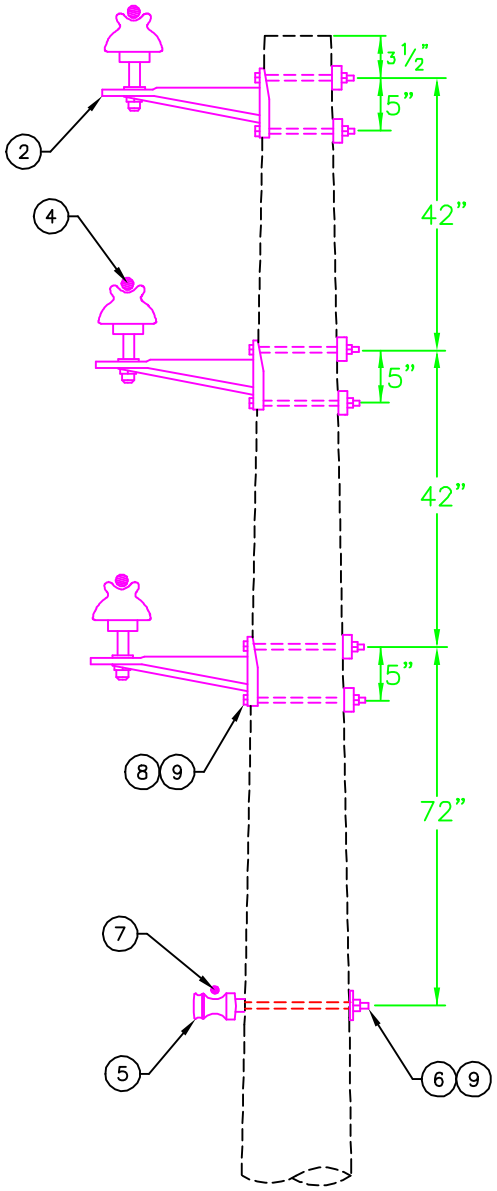

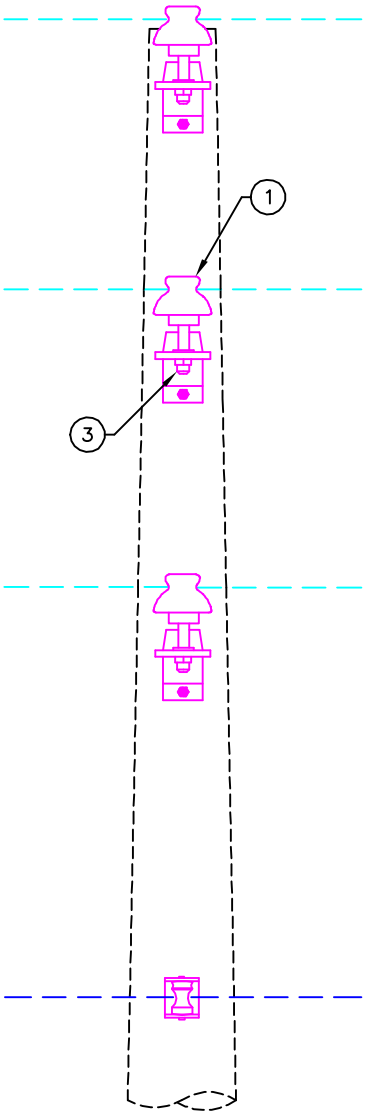

NOTES:

1) SEE DRAWINGS DN–GG AND DM–9 FOR INFORMATION AND MATERIALS RELATED GROUNDING.

2) MATERIAL VARIES WITH CONDUCTOR SIZE (1/0, 336, AND 795). SEE MATERIALS LIST FOR DETAILS.

DWG REF	QTY 1/0	336	795	LIST OF MATERIALS DESCRIPTION	STOCK#
1	3	3	–	INSULATORS, 15 kV PIN TYPE	203710
1	–	–	3	INSULATOR, 25 kV POST TYPE	207720
2	3	3	3	BRACKETS, MIF	203420
3	3	3	–	PIN, SHANK	203440
3	–	–	3	BOLTS, 3/4" x 3/4" STUD	210361
4	3	–	–	PREFORMS, 1/0 WRAP TIE	203590
4	–	3	–	PREFORMS, 336 WRAP LOCK TIE	203600
4	–	–	3	PREFORMS, 795 WRAP LOCK TIE	203660
5	1	1	1	INSULATORS, SPOOL "J–151"	208280
6	1	1	1	BOLTS, 5/8" x 12" SPOOL	202000
7	1	1	–	PREFORMS, 1/0 SPOOL TIE	203650
7	–	–	1	PREFORMS, 336 SPOOL TIE	207580
8	6	6	6	BOLTS, 5/8" x 12"	202070
9	7	7	7	WASHERS, 2 1/4" SQUARE	204440

GREENVILLE UTILITIES COMMISSION
GREENVILLE, NORTH CAROLINA

Greenville Utilities

12.47/7.2KV PRIMARY, THREE PHASE
TANGENT, MIF VERTICAL SINGLE PIN

DWN.	JLS	DATE: 08/28/2019	
CKD.	KW	APPD.	
SCALE:	NTS		
DATE	REVISION	DATE	REVISION

DWG. NO.

C1.V1

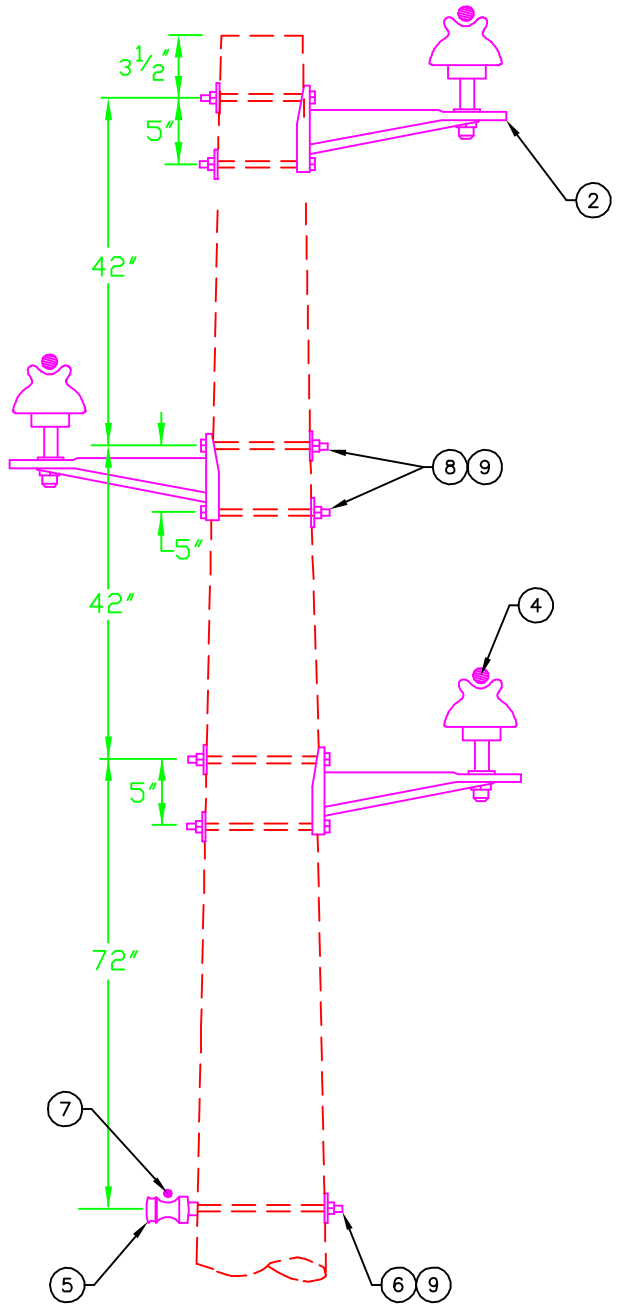

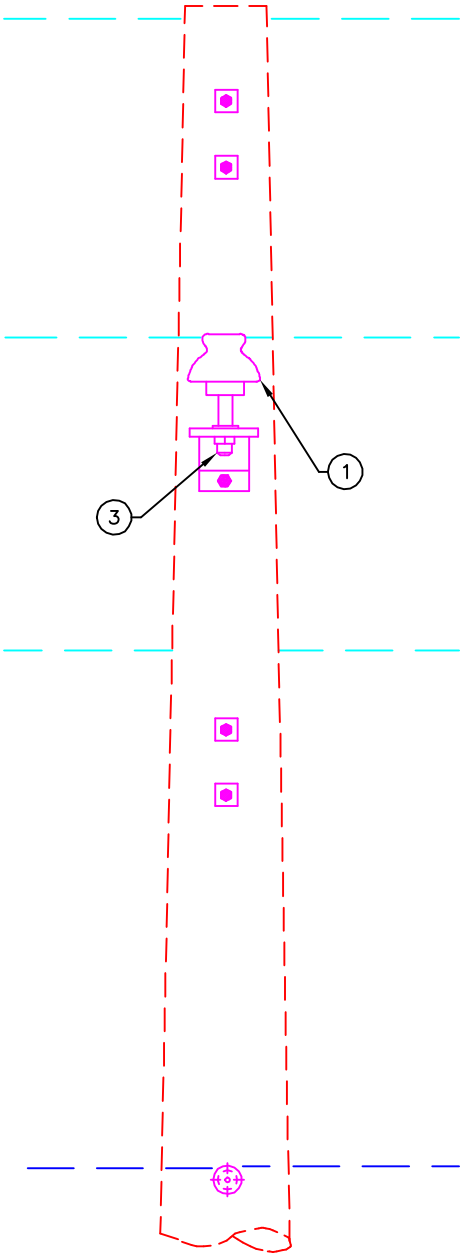

NOTES:

1) SEE DRAWINGS DN–GG AND DM–9 FOR INFORMATION AND MATERIALS RELATED GROUNDING.

2) MATERIAL VARIES WITH CONDUCTOR SIZE (1/0, 336, AND 795). SEE MATERIALS LIST FOR DETAILS.

DWG REF	QTY 1/0	336	795	LIST OF MATERIALS DESCRIPTION	STOCK#
1	3	3	–	INSULATORS, 15 kV PIN TYPE	203710
1	–	–	3	INSULATOR, 25 kV POST TYPE	207720
2	3	3	3	BRACKETS, MIF	203420
3	3	3	–	PIN, SHANK	203440
3	–	–	3	BOLTS, 3/4" x 3/4" STUD	210361
4	3	–	–	PREFORMS, 1/0 WRAP TIE	203590
4	–	3	–	PREFORMS, 336 WRAP LOCK TIE	203600
4	–	–	3	PREFORMS, 795 WRAP LOCK TIE	203660
5	1	1	1	INSULATORS, SPOOL "J–151"	208280
6	1	1	1	BOLTS, 5/8" x 12" SPOOL	202000
7	1	1	–	PREFORMS, 1/0 SPOOL TIE	203650
7	–	–	1	PREFORMS, 336 SPOOL TIE	207580
8	6	6	6	BOLTS, 5/8" x 12"	202070
9	7	7	7	WASHERS, 2 1/4" SQUARE	204440

GREENVILLE UTILITIES COMMISSION
GREENVILLE, NORTH CAROLINA

Greenville Utilities

12.47/7.2KV PRIMARY, THREE PHASE
TANGENT, MIF Z CONSTRUCTION SINGLE PIN

DWN.	JLS	DATE: 08/28/2019	
CKD.	KW	APPD.	
SCALE:	NTS		
DATE	REVISION	DATE	REVISION

DWG. NO.

C1.Z

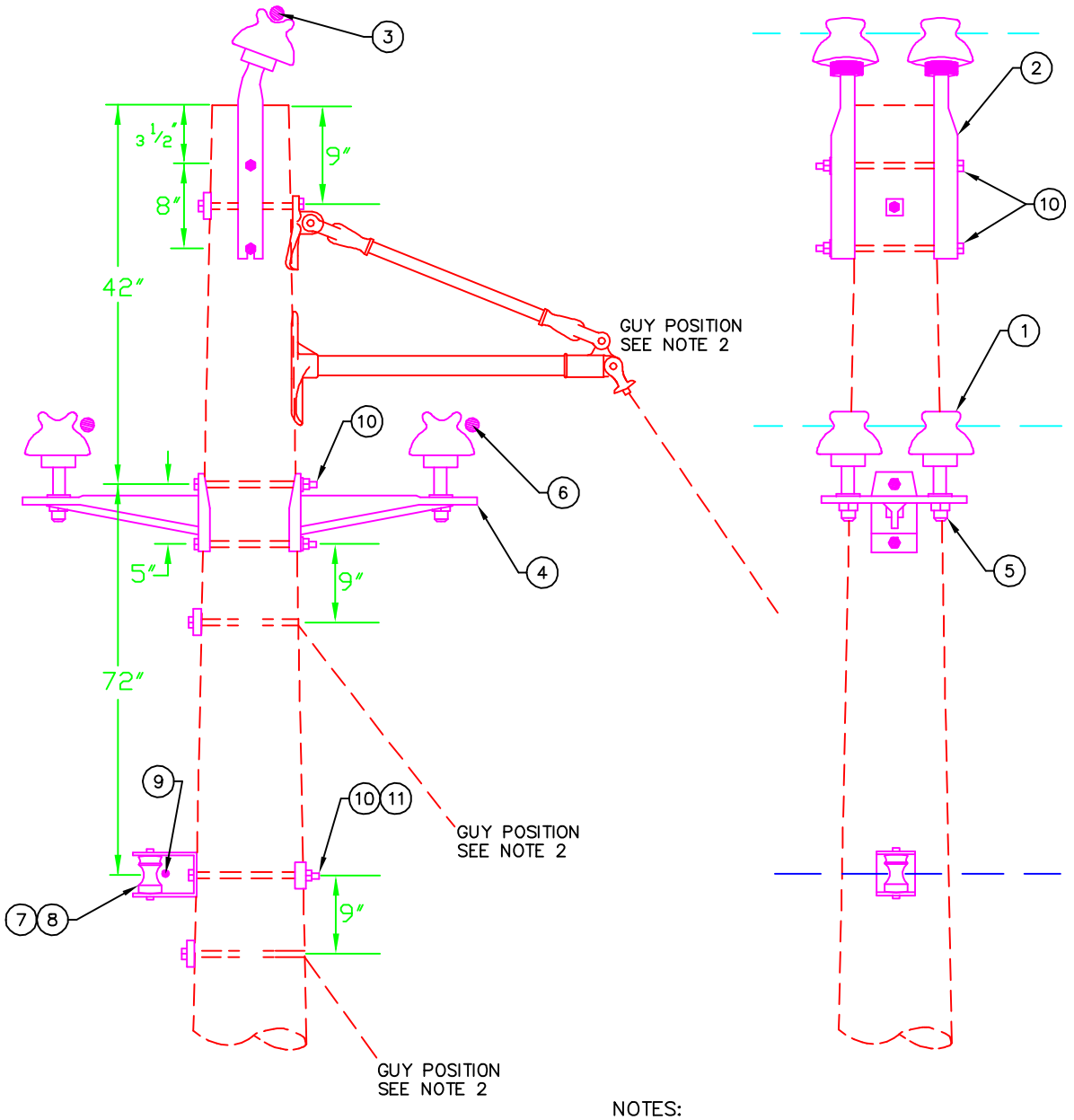

DWG REF	QTY 1/0	336	795	LIST OF MATERIALS DESCRIPTION	STOCK#
1	6	6	–	INSULATORS, 15 kV PIN TYPE	203710
1	–	–	6	INSULATOR, 25 kV POST TYPE	207720
2	2	2	–	PIN, 18" POLE TOP	203430
2	–	–	2	BRACKET, 35 kV POLE TOP	207890
3	1	–	–	PREFORMS, 1/0 DOUBLE SUPPORT	203580
3	–	1	–	PREFORMS, 336 DOUBLE SUPPORT TIE	203570
3	–	–	1	PREFORMS, 795 DOUBLE SUPPORT TIE	203670
4	2	2	2	BRACKETS, MIF	203420
5	4	4	–	PIN, SHANK	203440
5	–	–	6	BOLTS, 3/4" x 3/4" STUD	210361
6	2	–	–	PREFORMS, 1/0 DOUBLE SIDE TIE	203540
6	–	2	–	PREFORMS, 336 DOUBLE SIDE TIE	203550
6	–	–	2	PREFORMS, 795 DOUBLE SIDE TIE	207800
7	1	1	1	INSULATORS, SPOOL "J-151"	208280
8	1	1	1	CLEVIS, 1342	208290
9	1	1	–	PREFORMS, 1/0 SPOOL TIE	203650
9	–	–	1	PREFORMS, 336 SPOOL TIE	207580
10	5	5	5	BOLTS, 5/8" x 12"	202070
11	1	1	1	WASHERS, 3 X 3 CURVED	204450

NOTES:

1) LINE ANGLE FOR A DOUBLE PIN INSULATOR SHOULD BE (1°–12°).

2) SEE DRAWINGS SWG–12(14), DG–12(14), DG–GG, AND DM–9 FOR INFORMATION AND MATERIALS RELATED TO GUYING AND GROUNDING.

3) MATERIAL VARIES WITH CONDUCTOR SIZE (1/0, 336, AND 795). SEE MATERIALS LIST FOR DETAILS

GREENVILLE UTILITIES COMMISSION
GREENVILLE, NORTH CAROLINA

Greenville Utilities

12.47/7.2KV PRIMARY, THREE PHASE
SMALL ANGLE, MIF CONSTRUCTION DOUBLE PIN

DWN.	JLS	DATE: 08/28/2019	
CKD.	KW	APPD.	
SCALE:	NTS		

DATE	REVISION	DATE	REVISION

DWG. NO.

C2

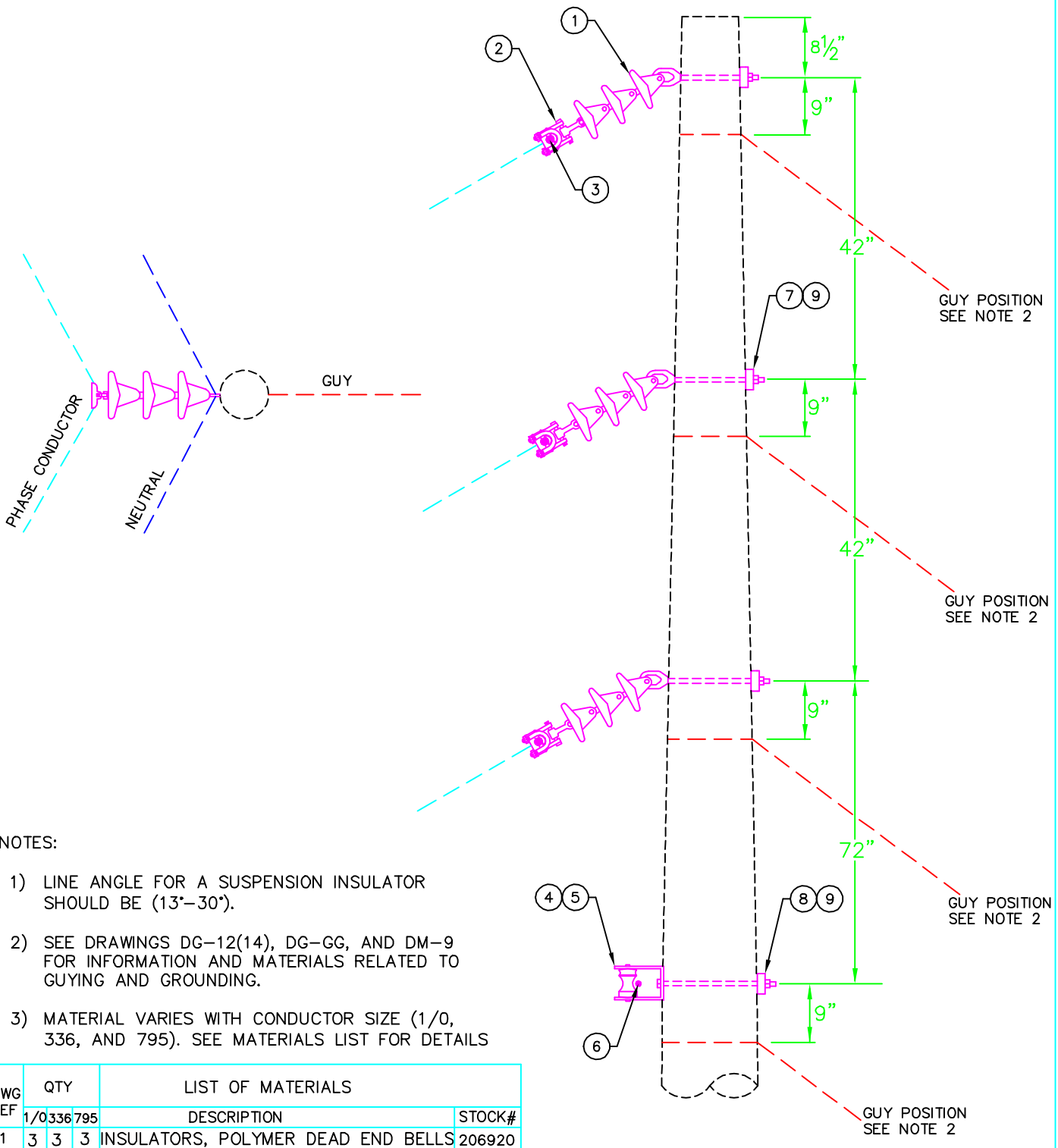

NOTES:

1) LINE ANGLE FOR A SUSPENSION INSULATOR SHOULD BE (13°–30°).

2) SEE DRAWINGS DG–12(14), DG–GG, AND DM–9 FOR INFORMATION AND MATERIALS RELATED TO GUYING AND GROUNDING.

3) MATERIAL VARIES WITH CONDUCTOR SIZE (1/0, 336, AND 795). SEE MATERIALS LIST FOR DETAILS

DWG REF	QTY 1/0	QTY 336	QTY 795	LIST OF MATERIALS DESCRIPTION	STOCK#
1	3	3	3	INSULATORS, POLYMER DEAD END BELLS	206920
2	3	–	–	CLAMPS, 1/0 SUSPENSION	202420
2	–	3	–	CLAMPS, 336 SUSPENSION	202400
2	–	–	3	CLAMPS, 795 SUSPENSION	202430
3	3	–	–	RODS, 1/0 ARMOR	201960
3	–	3	–	RODS, 336 ARMOR	201980
3	–	–	3	RODS, 795 ARMOR	207740
4	1	1	1	INSULATORS, SPOOL "J–151"	208280
5	1	1	1	CLEVIS, 1342	208290
6	1	1	–	PREFORMS, 1/0 SPOOL TIE	203650
6	–	–	1	PREFORMS, 336 SPOOL TIE	207580
7	3	3	3	BOLTS, 5/8" x 12" EYE	202290
8	1	1	1	BOLTS, 5/8" x 12"	202070
9	4	4	4	WASHERS, 3 X 3 CURVED	204450

GREENVILLE UTILITIES COMMISSION
GREENVILLE, NORTH CAROLINA

Greenville Utilities

12.47/7.2KV PRIMARY, THREE PHASE
LARGE ANGLE, SUSPENSION INSULATOR

DWN.	JLS	DATE:	09/03/2019
CKD.	KW	APPD.	
SCALE:	NTS		

DATE	REVISION	DATE	REVISION

DWG. NO.

C3

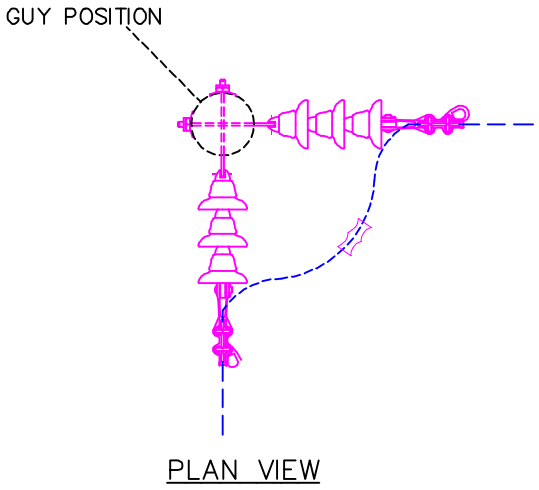

PLAN VIEW

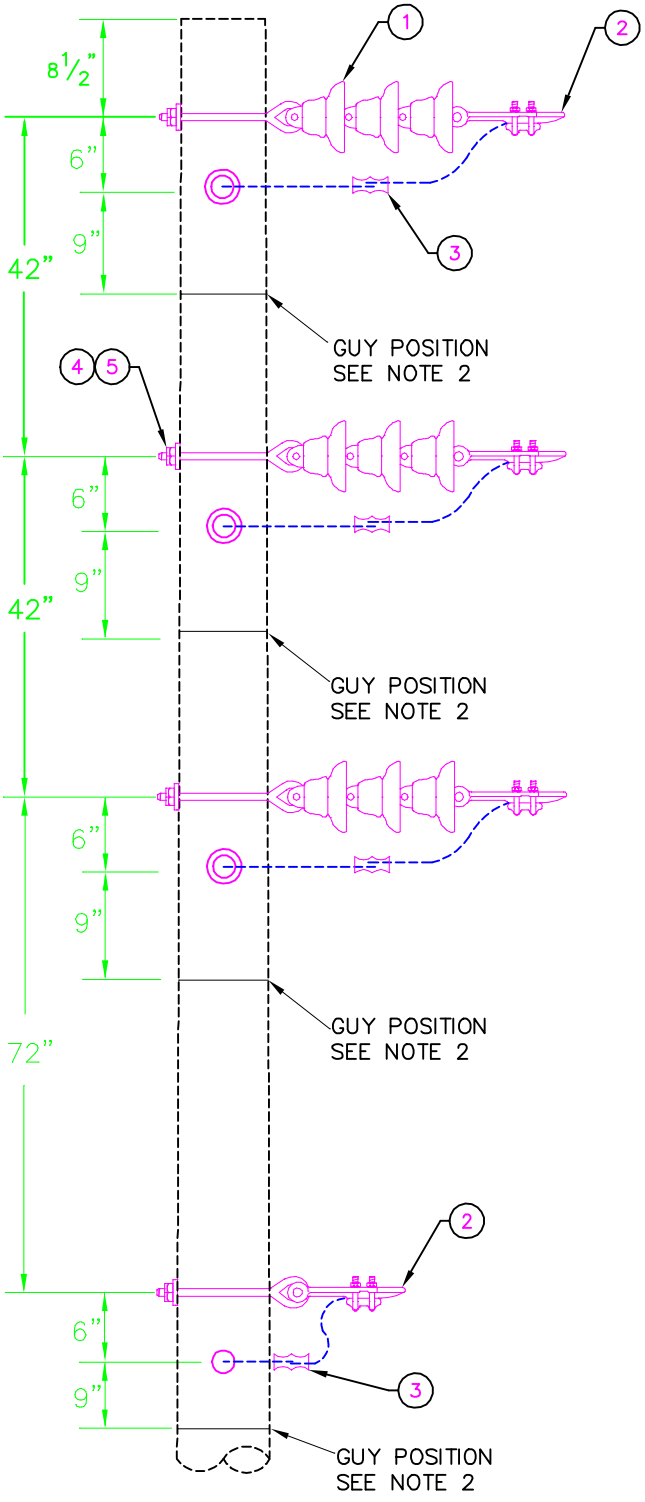

NOTES:

1) LINE ANGLE FOR A DOUBLE DEADEND SHOULD BE GREATER THAN 30°.

2) SEE DRAWINGS DG-12(14), DG-GG, AND DM-9 FOR INFORMATION AND MATERIALS RELATED TO GUYING AND GROUNDING.

3) MATERIAL VARIES WITH CONDUCTOR SIZE (1/0, 336, AND 795). SEE MATERIALS LIST FOR DETAILS.

DWG REF	QTY 1/0	QTY 336	QTY 795	LIST OF MATERIALS DESCRIPTION	STOCK #
1	6	6	6	INSULATORS, POLYMER DEAD END BELLS	206920
2	8	2	–	SHOE, #6 – 1/0 DEAD END	207570
2	–	6	2	SHOE, 336 DEAD END	202450
2	–	–	6	SHOE, 795 DEAD END	202440
3	4	1	–	SQUEEZONS, #4	203010
3	–	3	1	CONN., 602007 AMPACT 336-336	202880
3	–	–	3	CONN., 795-795 AMPACT	202940
4	8	8	8	BOLTS, 5/8" X 12" EYE	202290
5	8	8	8	WASHERS, 3 X 3 CURVED	204450

GREENVILLE UTILITIES COMMISSION
GREENVILLE, NORTH CAROLINA

Greenville Utilities

12.47/7.2KV PRIMARY, THREE PHASE
LARGE ANGLE, DOUBLE DEADEND SUSPENSION

DWN.	JLS	DATE: 09/03/2019	
CKD.	KW	APPD.	
SCALE:	NONE		
DATE	REVISION	DATE	REVISION

DWG. NO.

C4

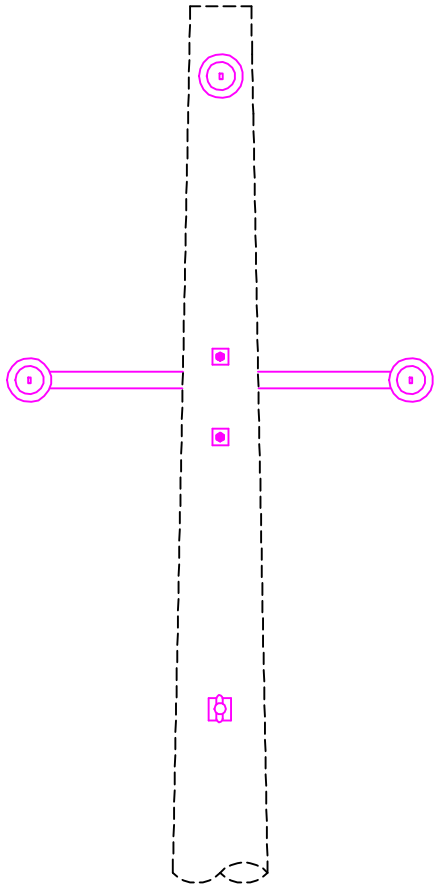

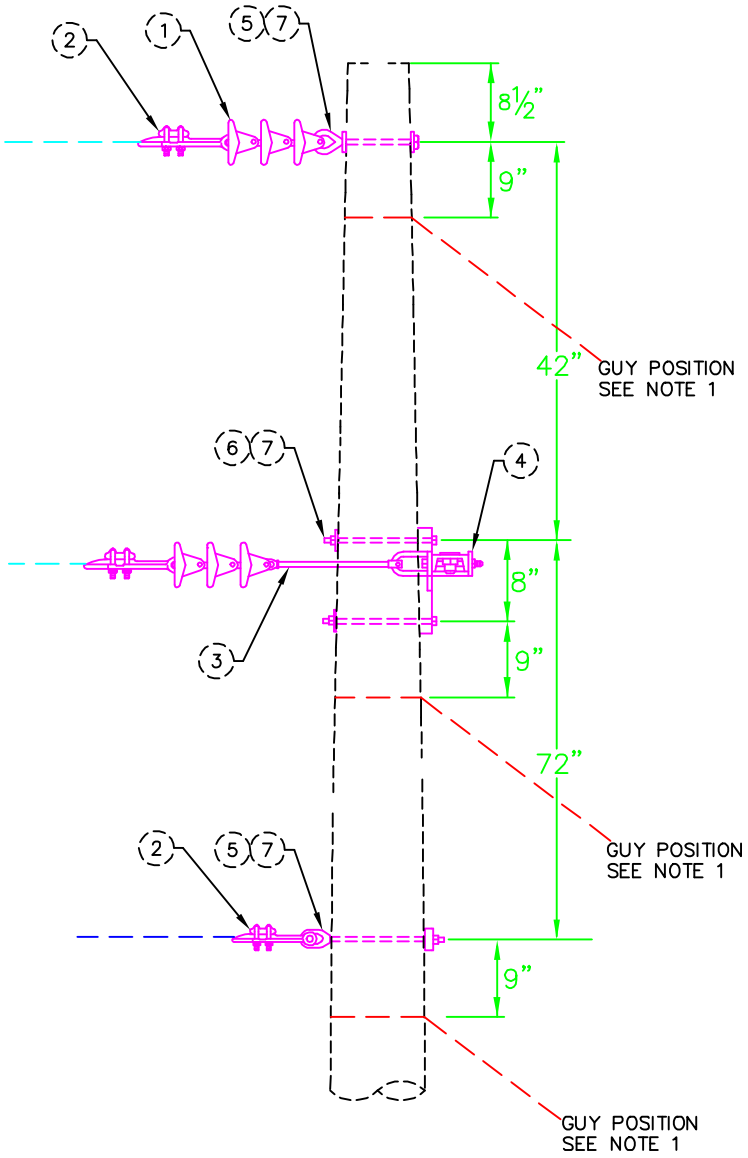

NOTES:

1) SEE DRAWINGS DG–12(14), DG–GG, AND DM–9 FOR INFORMATION AND MATERIALS RELATED TO GUYING AND GROUNDING.

2) MATERIAL VARIES WITH CONDUCTOR SIZE (1/0, 336, AND 795). SEE MATERIALS LIST FOR DETAILS.

DWG REF	QTY 1/0	QTY 336	QTY 795	LIST OF MATERIALS DESCRIPTION	STOCK #
1	3	3	3	INSULATORS, POLYMER DEAD END BELLS	206920
2	4	1	–	SHOE, #6 – 1/0 DEAD END	207570
2	–	3	1	SHOE, 336 DEAD END	202450
2	–	–	3	SHOE, 795 DEAD END	202440
3	2	2	2	EXTENSIONS, 14" LINKS	210340
4	1	1	1	ARMS, STEEL DEAD END CROSS	203800
5	2	2	2	BOLTS, 5/8" x 12" EYE	202290
6	2	2	2	BOLTS, 3/4" x 12"	202230
7	4	4	4	WASHERS, 3 X 3 CURVED	204450

GREENVILLE UTILITIES COMMISSION
GREENVILLE, NORTH CAROLINA

Greenville Utilities

12.47/7.2KV PRIMARY, THREE PHASE
SINGLE DEADEND, CROSSARM SUSPENSION

DWN.	JLS	DATE: 09/03/2019	
CKD.	KW	APPD.	
SCALE:	NONE		

DATE	REVISION	DATE	REVISION

DWG. NO.

C5

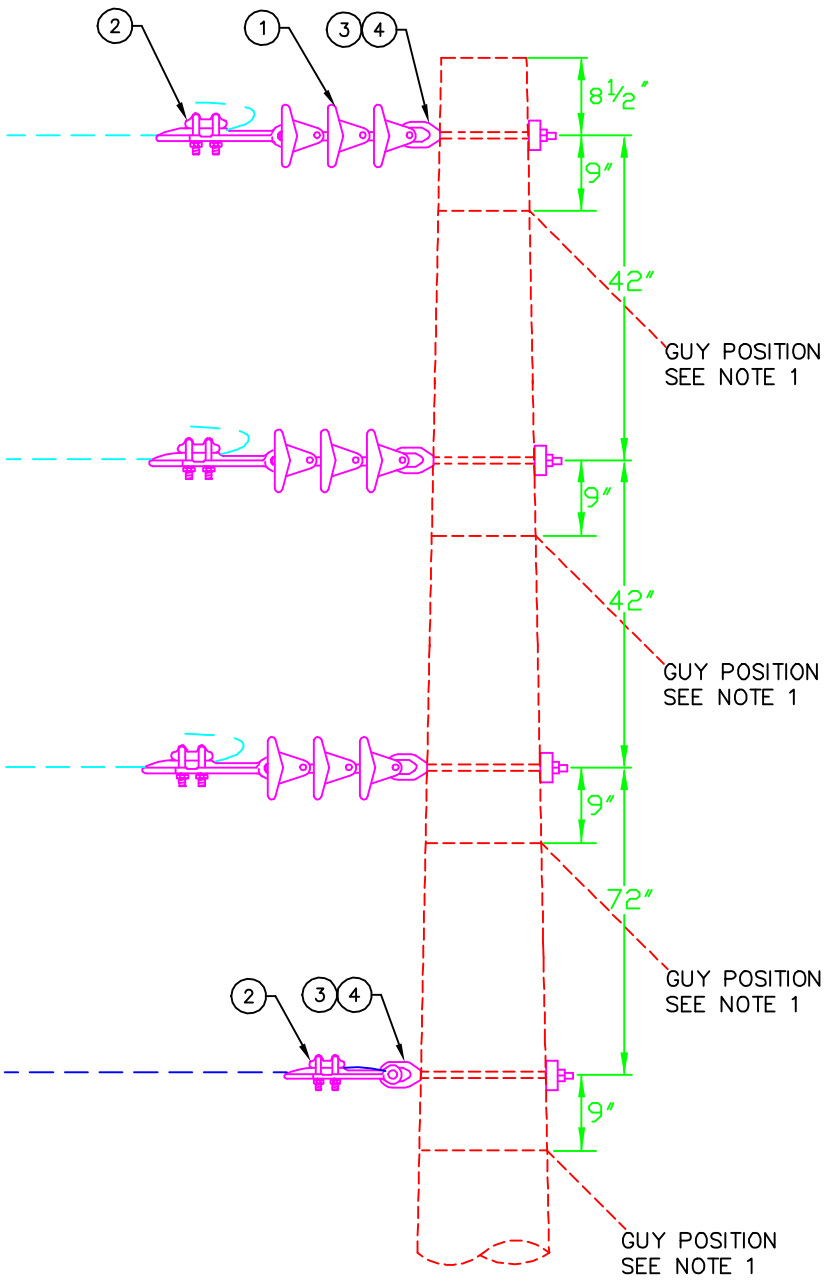

NOTES:

1) SEE DRAWINGS DG–12(14), DG–GG, AND DM–9 FOR INFORMATION AND MATERIALS RELATED TO GUYING AND GROUNDING.

2) MATERIAL VARIES WITH CONDUCTOR SIZE (1/0, 336, AND 795). SEE MATERIALS LIST FOR DETAILS.

DWG REF	QTY 1/0	QTY 336	QTY 795	LIST OF MATERIALS DESCRIPTION	STOCK #
1	3	3	3	INSULATORS, POLYMER DEAD END BELLS	206920
2	4	1	–	SHOE, #6 - 1/0 DEAD END	207570
2	–	3	1	SHOE, 336 DEAD END	202450
2	–	–	3	SHOE, 795 DEAD END	202440
3	4	4	4	BOLTS, 5/8" X 12" EYE	202290
4	4	4	4	WASHERS, 3 X 3 CURVED	204450

GREENVILLE UTILITIES COMMISSION
GREENVILLE, NORTH CAROLINA

Greenville Utilities

12.47/7.2KV PRIMARY, THREE PHASE
SINGLE DEADEND (TAP), VERTICAL SUSPENSION

DWN.	JLS	DATE:	09/03/2019
CKD.	KW	APPD.	
SCALE:	NONE		

DATE	REVISION	DATE	REVISION

DWG. NO.

C5.V

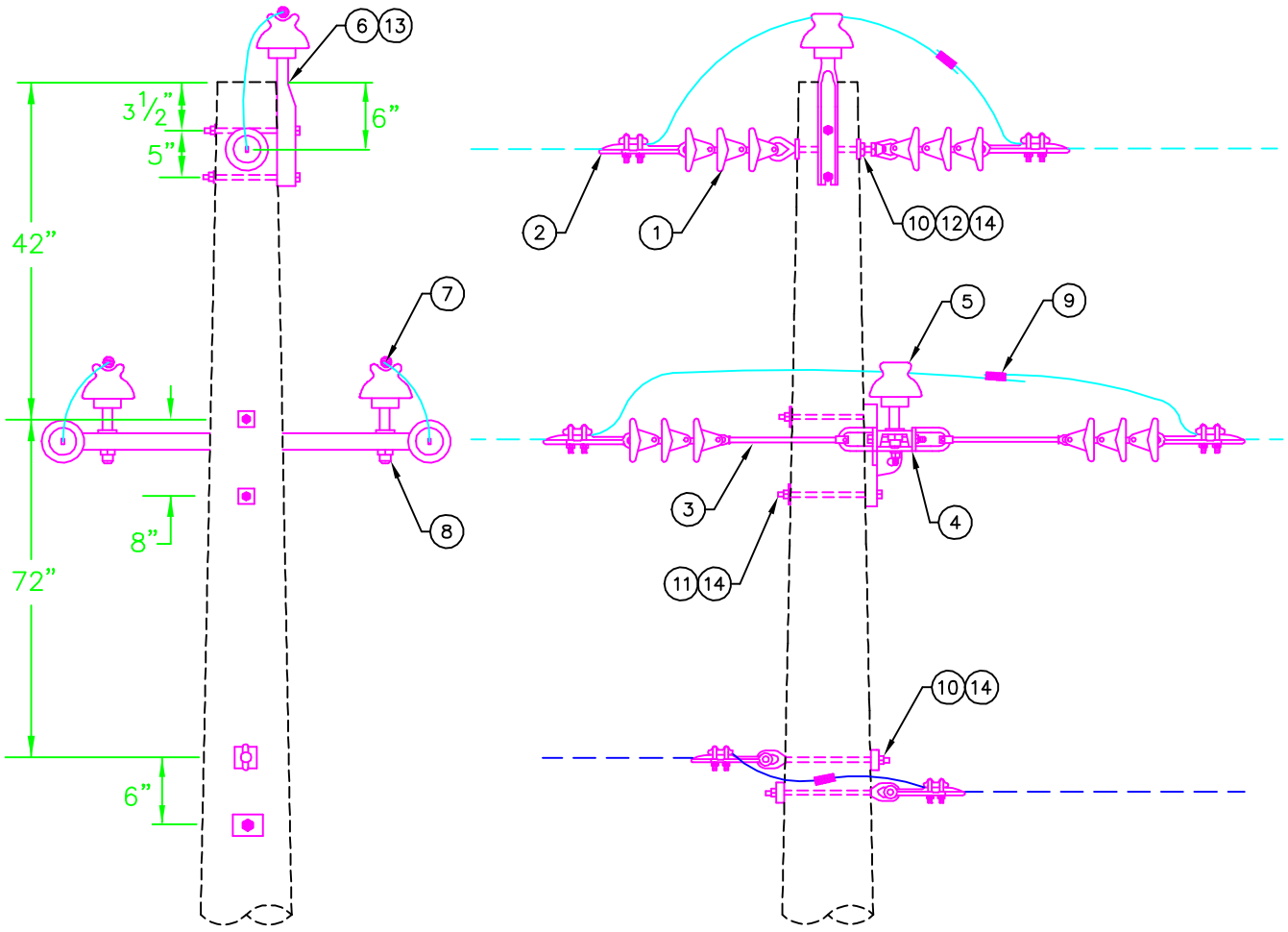

DWG REF	QTY 1/0	QTY 336	QTY 795	LIST OF MATERIALS DESCRIPTION	STOCK#
1	6	6	6	INSULATORS, POLYMER DEAD END BELLS	203710
2	8	2	–	SHOE, #6 – 1/0 DEAD END	207570
2	–	6	2	SHOE, 336 DEAD END	202450
2	–	–	6	SHOE, 795 DEAD END	202440
3	4	4	4	EXTENSIONS, 14" LINKS JW=DO NOT USE 2026.01.13	210340
4	1	1	1	ARMS, STEEL DEAD END CROSS	203800
5	3	3	–	INSULATORS, 15 kV PIN TYPE	203710
5	–	–	3	INSULATOR, 25 kV POST TYPE	207720
6	1	1	–	PIN, 18" POLE TOP	203430
6	–	–	1	BRACKET, 35 kV POLE TOP	207890
7	3	–	–	PREFORMS, 1/0 WRAP TIE	203590
7	–	3	–	PREFORMS, 336 WRAP LOCK TIE	203600
7	–	–	3	PREFORMS, 795 WRAP LOCK TIE	203660
8	2	2	–	PINS, LONG SHANK CROSS ARM	210311
8	–	–	2	PINS, 35 KV CROSS	–
9	4	1	–	SQUEEZONS, #4	203010
9	–	3	1	CONN., 602007 AMPACT 336–336	202880
9	–	–	3	CONN., 795–795 AMPACT	202940
10	3	3	3	BOLTS, 5/8" x 12" EYE	202290
11	2	2	2	BOLTS, 3/4" x 12"	202230
12	1	1	1	NUTS, 5/8" EYE	204420
13	–	–	1	BOLTS, 3/4" x 3/4" STUD	210361
14	5	5	5	WASHERS, 3 X 3 CURVED	204450

NOTES:

1) SEE DRAWINGS DN–GG AND DM–9 FOR INFORMATION AND MATERIALS RELATED TO GUYING AND GROUNDING.

2) MATERIAL VARIES WITH CONDUCTOR SIZE (1/0, 336, AND 795). SEE MATERIALS LIST FOR DETAILS.

GREENVILLE UTILITIES COMMISSION
GREENVILLE, NORTH CAROLINA

Greenville Utilities

12.47/7.2KV PRIMARY, THREE PHASE
TANGENT DOUBLE DEADEND, CROSS. SUSPEN.

DWN.	JLS	DATE:	09/04/2019
CKD.	KW	APPD.	
SCALE:	NTS		

DATE	REVISION	DATE	REVISION

DWG. NO.

C6

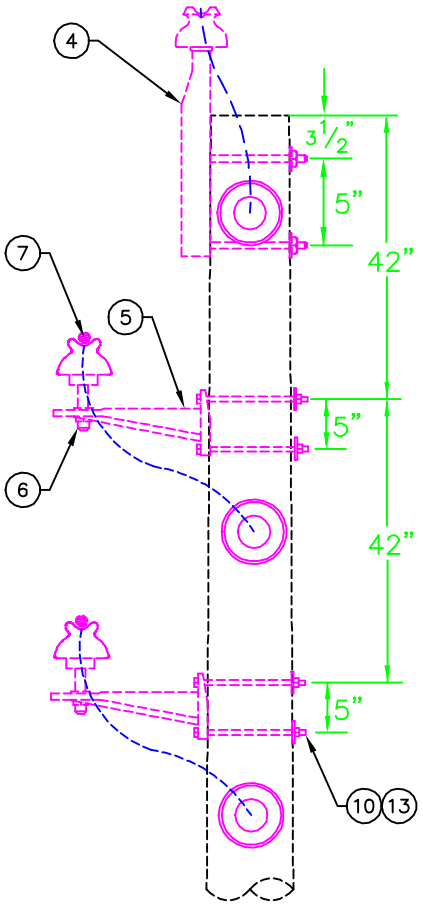

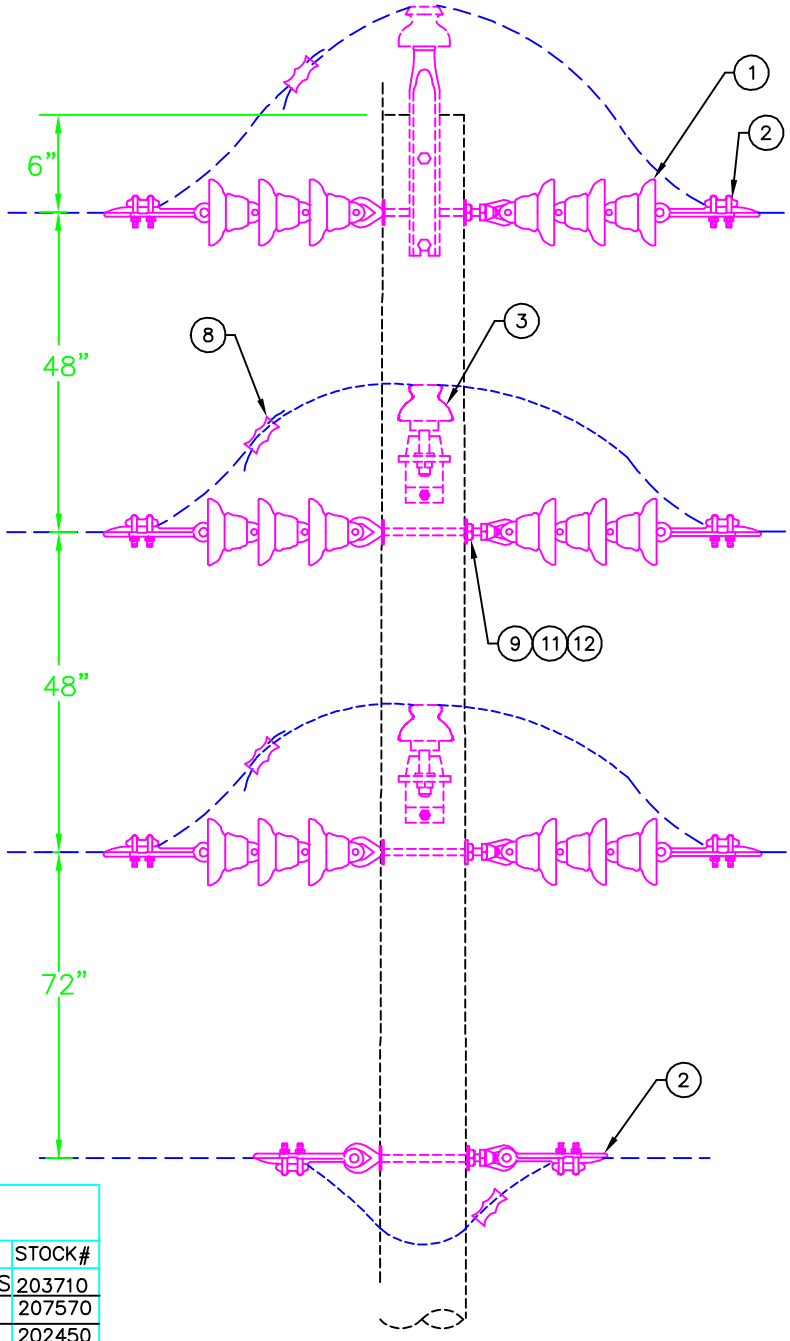

DWG REF	QTY 1/0	QTY 336	QTY 795	LIST OF MATERIALS DESCRIPTION	STOCK#
1	6	6	6	INSULATORS, POLYMER DEAD END BELLS	203710
2	8	2	–	SHOE, #6 – 1/0 DEAD END	207570
2	–	6	2	SHOE, 336 DEAD END	202450
2	–	–	6	SHOE, 795 DEAD END	202440
3	3	3	–	INSULATORS, 15 kV PIN TYPE	203710
3	–	–	3	INSULATOR, 25 kV POST TYPE	207720
4	1	1	–	PIN, 18" POLE TOP	203430
4	–	–	1	BRACKET, 35 kV POLE TOP	207890
5	1	1	1	BRACKETS, MIF	203420
6	2	2	–	PIN, SHANK	203440
6	–	–	3	BOLTS, 3/4" x 3/4" STUD	210361
7	3	–	–	PREFORMS, 1/0 WRAP TIE	203590
7	–	3	–	PREFORMS, 336 WRAP LOCK TIE	203600
7	–	–	3	PREFORMS, 795 WRAP LOCK TIE	203660
8	4	1	–	SQUEEZONS, #4	203010
8	–	3	1	CONN., 602007 AMPACT 336–336	202880
8	–	–	3	CONN., 795–795 AMPACT	202940
9	4	4	4	BOLTS, 5/8" x 12" EYE	202290
10	6	6	6	BOLTS, 5/8" x 12"	202070
11	4	4	4	NUTS, 5/8" EYE	204420
12	3	3	3	WASHERS, 3 X 3 CURVED	204450
13	5	5	5	2 1/4" SQUARE WASHER	204440

NOTES:

1) SEE DRAWINGS DN–GG AND DM–9 FOR INFORMATION AND MATERIALS RELATED TO GUYING AND GROUNDING.

GREENVILLE UTILITIES COMMISSION
GREENVILLE, NORTH CAROLINA

Greenville Utilities

12.47/7.2KV PRIMARY, THREE PHASE
TANGENT, DOUBLE DEADEND SUSPENSION

DWN.	JLS	DATE: 09/04/2019	
CKD.	KW	APPD.	
SCALE:	NONE		

DATE	REVISION	DATE	REVISION

DWG. NO.

C6.V

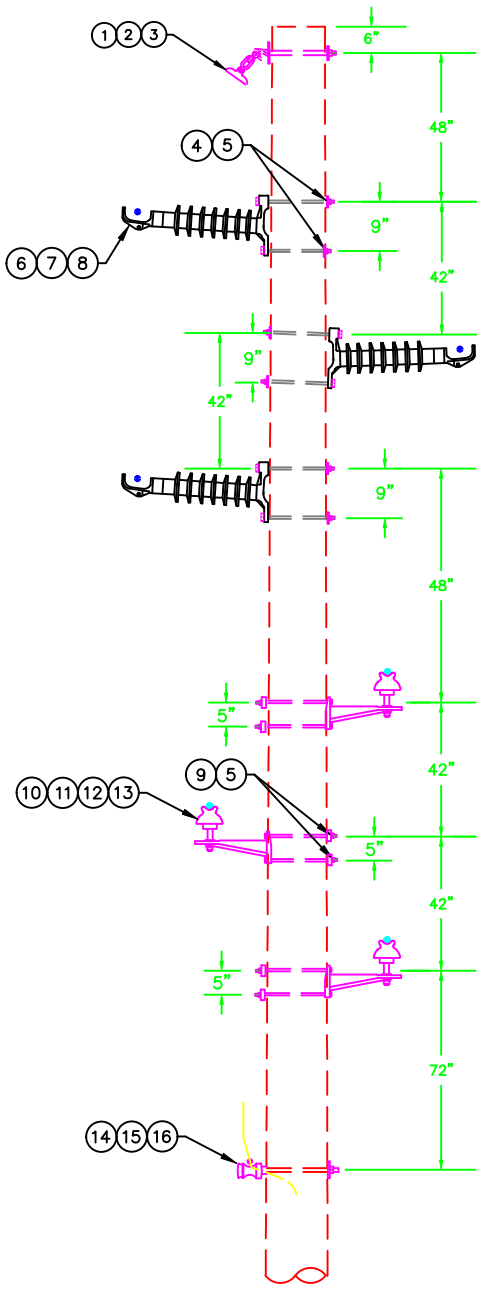

60' POLE

NOTES:

1) SEE DRAWINGS DN-GG AND DM-9 FOR INFORMATION AND MATERIALS RELATED GROUNDING.

2) MATERIAL VARIES WITH CONDUCTOR SIZE. SEE MATERIALS LIST FOR DETAILS.

LIST OF MATERIALS

DWG REF	QTY	DESCRIPTION	STOCK#
1	1	BOLT, 5/8" X 8", EYE	202279
2	1	CLAMPS, 1/0 SUSPENSION	202420
3	1	ROD, (7#9) ARMOR	208570
4	6	5/8" X 10" MACHINE BOLT	202060
5	12	P143 CURVED WASHER	204450
6	3	34 kV POST INSULATOR	203760
7	3	ARMOR ROD	–
8	3	TRUNION CLAMP	NS
9	6	5/8" X 12" MACHINE BOLT	202070
10	3	BRACKETS, MIF	203420
11	3	PIN, SHANK	203440
12	3	INSULATORS, 15 KV PIN TYPE	203710
13	3	PREFORMS, WRAP LOCK TIE	–
14	1	NO. J151 SPOOL INSULATOR	208280
15	1	PREFORMED SPOOL TIE	–
16	1	5/8" X 12" SPOOL BOLT	202000

GREENVILLE UTILITIES COMMISSION
GREENVILLE, NORTH CAROLINA

Greenville Utilities

34.5 KV PRIMARY, THREE PHASE
TANGENT, MIF Z CONSTRUCTION SINGLE PIN

DWN.	DRB	DATE: 04/29/2024	
CKD.	JLS	APPD.	
SCALE:	NTS		
DATE	REVISION	DATE	REVISION

DWG. NO.

SPZD1.Z1

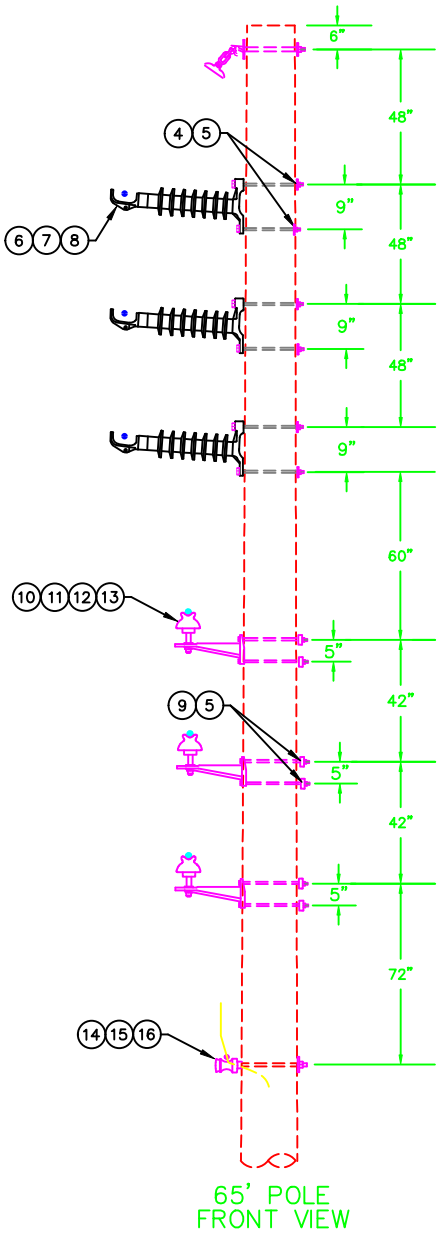

65' POLE
FRONT VIEW

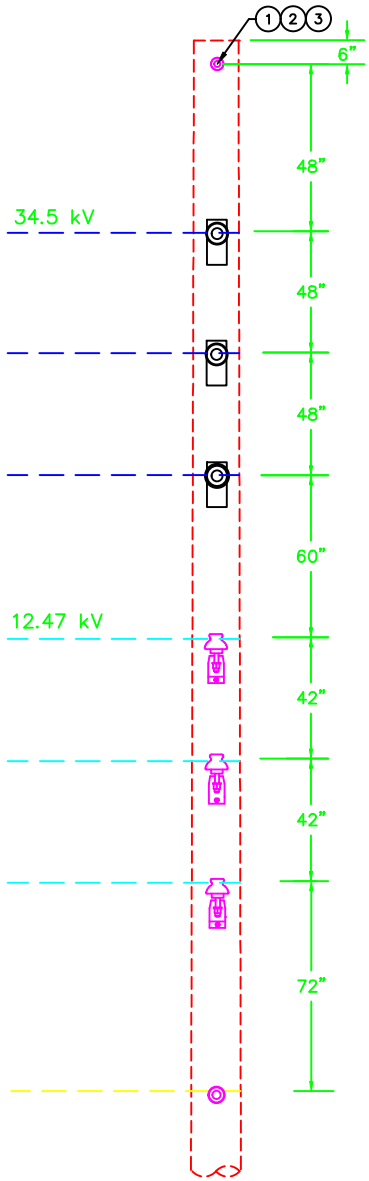

65' POLE
SIDE VIEW

NOTES:

1) SEE DRAWINGS DN–GG AND DM–9 FOR INFORMATION AND MATERIALS RELATED GROUNDING.

2) MATERIAL VARIES WITH CONDUCTOR SIZE (1/0, 336, AND 795). SEE MATERIALS LIST FOR DETAILS.

LIST OF MATERIALS

DWG REF	QTY	DESCRIPTION	GUC STOCK#
1	1	BOLT, 5/8" X 8", EYE	202279
2	1	CLAMPS, 1/0 SUSPENSION	202420
3	1	ROD, (7#9) ARMOR	208570
4	6	5/8" X 10" MACHINE BOLT	202060
5	12	P143 CURVED WASHER	204450
6	3	34 kV POST INSULATOR	203760
7	3	ARMOR ROD	–
8	3	TRUNION CLAMP	NS
9	6	5/8" X 12" MACHINE BOLT	202070
10	3	BRACKETS, MIF	203420
11	3	PIN, SHANK	203440
12	3	INSULATORS, 15 KV PIN TYPE	203710
13	3	PREFORMS, WRAP LOCK TIE	–
14	1	NO. J151 SPOOL INSULATOR	208280
15	1	PREFORMED SPOOL TIE	–
16	1	5/8" X 12" SPOOL BOLT	202000

GREENVILLE UTILITIES COMMISSION
GREENVILLE, NORTH CAROLINA

Greenville Utilities

12.47/7.2KV PRIMARY, THREE PHASE
TANGENT, 34KV POST, 12.47 MIF VERTICAL

DWN.	DRB	DATE: 04/29/2024	
CKD.	JLS	APPD.	
SCALE:	NTS		

DATE	REVISION	DATE	REVISION

DWG. NO.

SPVD1.V1

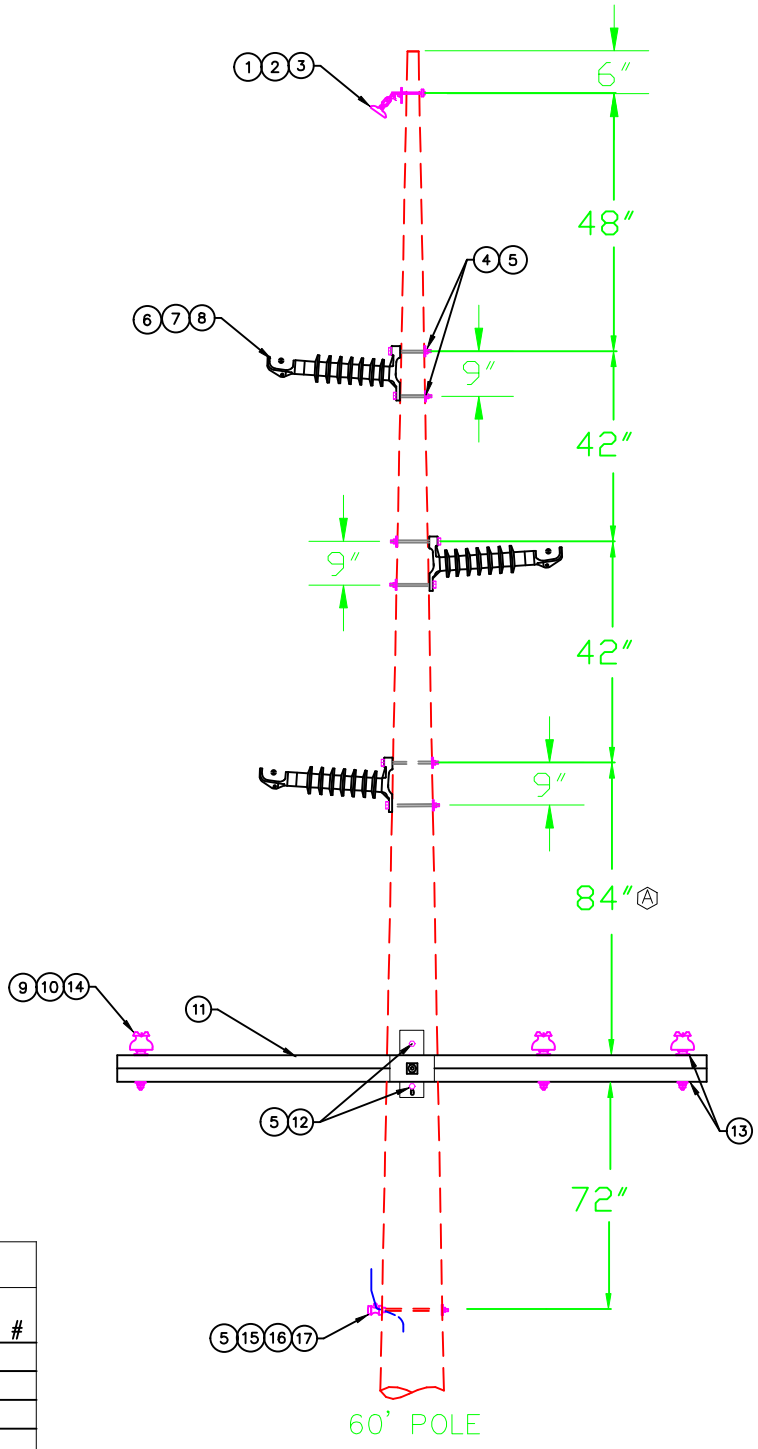

NOTES:

1) DRAWING NOT TO SCALE
2) SEE DRAWINGS DN–GG & DM–9 FOR INFORMATION AND MATERIALS RELATED TO GROUNDING.
3) MATERIAL VARIES WITH CONDUCTOR SIZE (1/0, 336, & 795). SEE MATERIALS LIST FOR DETAILS.
4) INSTALL 4" X 4" SQUARE WASHER (ITEM 12) ON TOP AND BOTTOM OF CROSSARM AT EACH INSULATOR.

Ⓐ DISTANCE BETWEEN CROSSARM AND INSULATOR CAN BE REDUCED. CONSULT WITH ENGINEERING.

LIST OF MATERIALS

DWG REF	QTY	DESCRIPTION	GUC STOCK #
1	1	BOLT, 5/8" X 8", EYE	202279
2	1	CLAMPS, 1/0 SUSPENSION	202420
3	1	ROD, (7#9) ARMOR	208570
4	6	5/8" X 10" MACHINE BOLT	202060
5	9	P143 CURVED WASHER	204450
6	3	34 kV POST INSULATOR	203760
7	3	TRUNION CLAMP	NS
8	3	ARMOR ROD	–
9	3	No. 887 SHORT SHANK PINS	203440
10	3	INSULATORS, 15 KV PIN TYPE	203710
11	1	ARMS, 10' H/T FIBERGLASS CROSS	203814
12	2	5/8" X 12" MACHINE BOLT	202070
13	6	WASHER, SQUARE, 4" X 4"	220012
14	3	PREFORMED WRAPLOCK TIES	–
15	1	NO. J151 SPOOL INSULATOR	208280
16	1	PREFORMED SPOOL TIE	–
17	1	5/8" X 12" SPOOL BOLT	202000

GREENVILLE UTILITIES COMMISSION
GREENVILLE, NORTH CAROLINA

Greenville Utilities

34.5 KV 3–PHASE TANGENT Z–FRAME
12.47 KV DISTRIBUTION CROSSARM UB

DWN. DRB		DATE: 2/26/2024	
CKD. JLS		APPD. JLS	
SCALE: N.T.S.			
DATE	REVISION	DATE	REVISION

DWG. NO.

SPZD1.C1

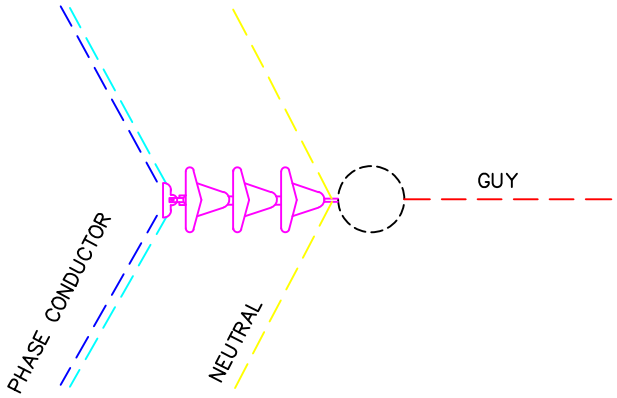

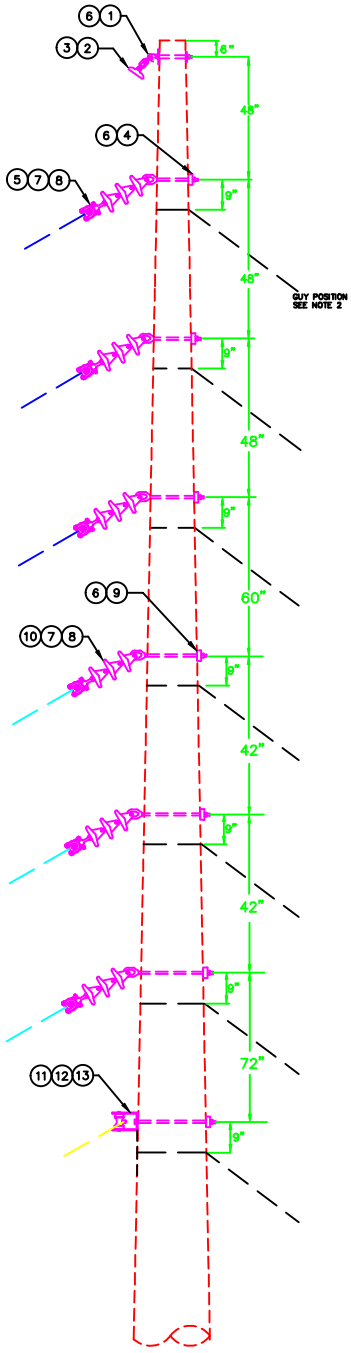

65' POLE

NOTES:

1) LINE ANGLE FOR A SUSPENSION INSULATOR SHOULD BE (13°–30°).

2) SEE DRAWINGS DG–12(14), DG–GG, AND DM–9 FOR INFORMATION AND MATERIALS RELATED TO GUYING AND GROUNDING.

3) MATERIAL VARIES WITH CONDUCTOR SIZE (1/0, 336, AND 795). SEE MATERIALS LIST FOR DETAILS

LIST OF MATERIALS

DWG REF	QTY	DESCRIPTION	GUC STOCK#
1	1	BOLT, 5/8" X 8", EYE	202279
2	1	CLAMPS, 1/0 SUSPENSION	202420
3	1	ROD, (7#9) ARMOR	208570
4	3	BOLT, 5/8" X 10" EYE	202280
5	3	INSULATORS, 34 KV DEAD END	208330
6	6	P143 CURVED WASHER	204450
7	6	CLAMPS, SUSPENSION	–
8	6	ARMOR ROD	–
9	3	BOLT, 5/8" X 12", EYE	202290
10	3	INSULATORS, POLYMER DEAD END BELLS	203710
11	1	NO. J151 SPOOL INSULATOR	208280
12	1	PREFORMED SPOOL TIE	–
13	1	5/8" X 12" SPOOL BOLT	202000
14			
15			

GREENVILLE UTILITIES COMMISSION
GREENVILLE, NORTH CAROLINA

Greenville Utilities

12.47/7.2KV PRIMARY, THREE PHASE
LARGE ANGLE, SUSPENSION INSULATOR

DWN.	DRB	DATE: 04/29/2024	
CKD.	JLS	APPD.	
SCALE:	NTS		

DATE	REVISION	DATE	REVISION

DWG. NO.

SSVD3.V3

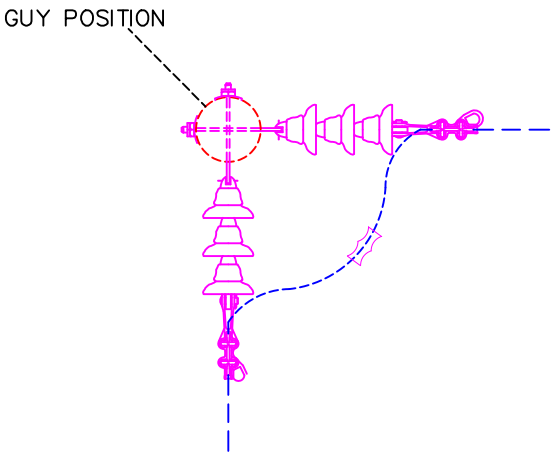

PLAN VIEW

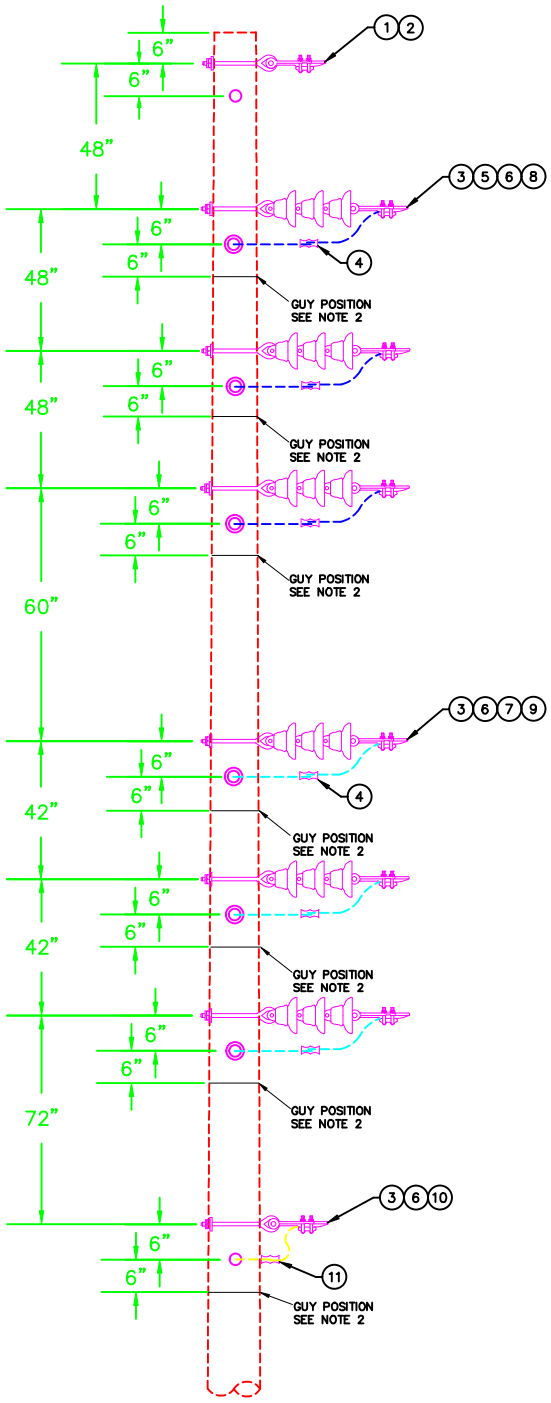

NOTES:

1) LINE ANGLE FOR A DOUBLE DEADEND SHOULD BE GREATER THAN 30°.

2) SEE DRAWINGS DG-12(14), DG-GG, AND DM-9 FOR INFORMATION AND MATERIALS RELATED TO GUYING AND GROUNDING.

3) MATERIAL VARIES WITH CONDUCTOR SIZE. SEE MATERIALS LIST FOR DETAILS.

LIST OF MATERIALS

DWG REF	QTY	DESCRIPTION	GUC STOCK#
1	2	BOLT, 5/8" X 8", EYE	202279
2	2	OHGW DEADEND	220003
3	14	SHOE, DEADEND	–
4	–	CONNECTOR, AMPACT	–
5	6	BOLT, 5/8" X 10", EYE	202280
6	14	P143 CURVED WASHER	204450
7	6	BOLT, 5/8" X 12", EYE	202290
8	6	INSULATORS, 34 KV DEADEND	208330
9	6	INSULATORS, POLYMER DEAD END BELLS	203710
10	2	BOLTS, 5/8" X 14" EYE	202300
11	–	SQUEEZONS, #2	203050

GREENVILLE UTILITIES COMMISSION
GREENVILLE, NORTH CAROLINA

Greenville Utilities

34.5 KV PRIMARY, THREE PHASE
LARGE ANGLE, DOUBLE DEADEND SUSPENSION

DWN.	DRB	DATE: 04/29/2024	
CKD.	JLS	APPD.	
SCALE:	NONE		

DATE	REVISION	DATE	REVISION

DWG. NO.

SSVD4.V4

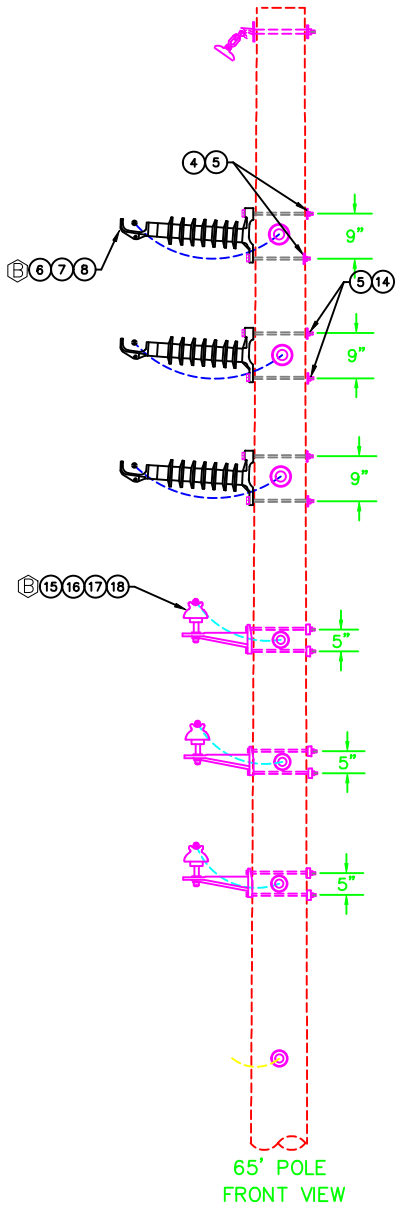

65' POLE
FRONT VIEW

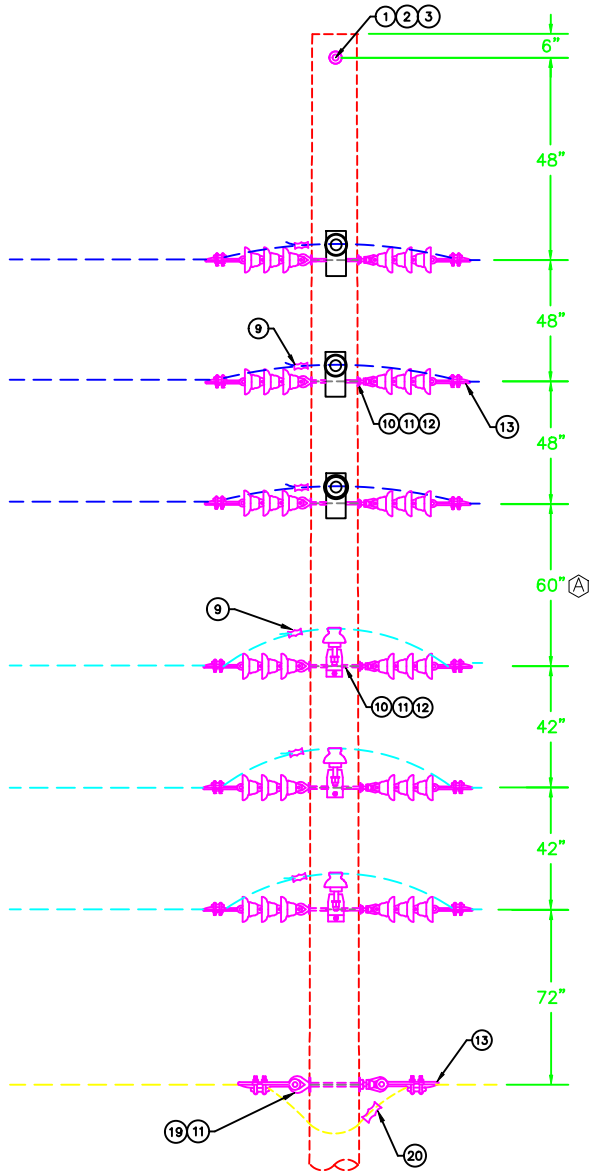

65' POLE
SIDE VIEW

NOTES:

1) DRAWING NOT TO SCALE
2) SEE DRAWINGS DN-GG & DM-9 FOR INFORMATION AND MATERIALS RELATED TO GROUNDING.
3) MATERIAL VARIES WITH CONDUCTOR SIZE (1/0, 336, & 795). SEE MATERIALS LIST FOR DETAILS.

(A) DISTANCE CAN BE REDUCED. CONSULT WITH ENGINEERING.

(B) INSTALL EYEBOLTS CENTERED IN-BETWEEN MOUNTING BOLTS FOR ITEM(6) & ITEM(15).

LIST OF MATERIALS

DWG REF	QTY	DESCRIPTION	GUC STOCK#
1	1	BOLT, 5/8" X 8", EYE	202279
2	1	CLAMPS, 1/0 SUSPENSION	202420
3	1	ROD, (7#9) ARMOR	208570
4	6	5/8" X 10" MACHINE BOLT	202060
5	6	P143 CURVED WASHER	204450
6	3	34 kV POST INSULATOR	203760
7	3	ARMOR ROD	–
8	3	TRUNION CLAMP	NS
9	–	CONNECTOR, AMPACT	–
10	6	BOLT, 5/8" X 10", EYE	202280
11	7	NUTS, 5/8" EYE	204420
12	12	INSULATORS, POLYMER DEAD END BELLS	203710
13	14	SHOE, DEAD END	–
14	6	5/8" X 12" MACHINE BOLT	202070
15	3	BRACKETS, MIF	203420
16	3	PIN, SHANK	203440
17	3	INSULATORS, 15 KV PIN TYPE	203710
18	3	PREFORMS, WRAP LOCK TIE	–
19	1	BOLTS, 5/8" X 12" EYE	202290
20	–	SQUEEZONS, #2	203050

GREENVILLE UTILITIES COMMISSION
GREENVILLE, NORTH CAROLINA

Greenville Utilities

34.5/12.47 KV, THREE PHASE
TANGENT, DOUBLE DEADEND SUSPENSION

DWN.	DRB	DATE: 02/27/2024	DWG. NO.
CKD.	JLS	APPD.	
SCALE:	NONE		SSVD6.V6

DATE	REVISION	DATE	REVISION

Appendix C: Standard Assembly Drawings

[Balance of Page Left Blank Intentionally]

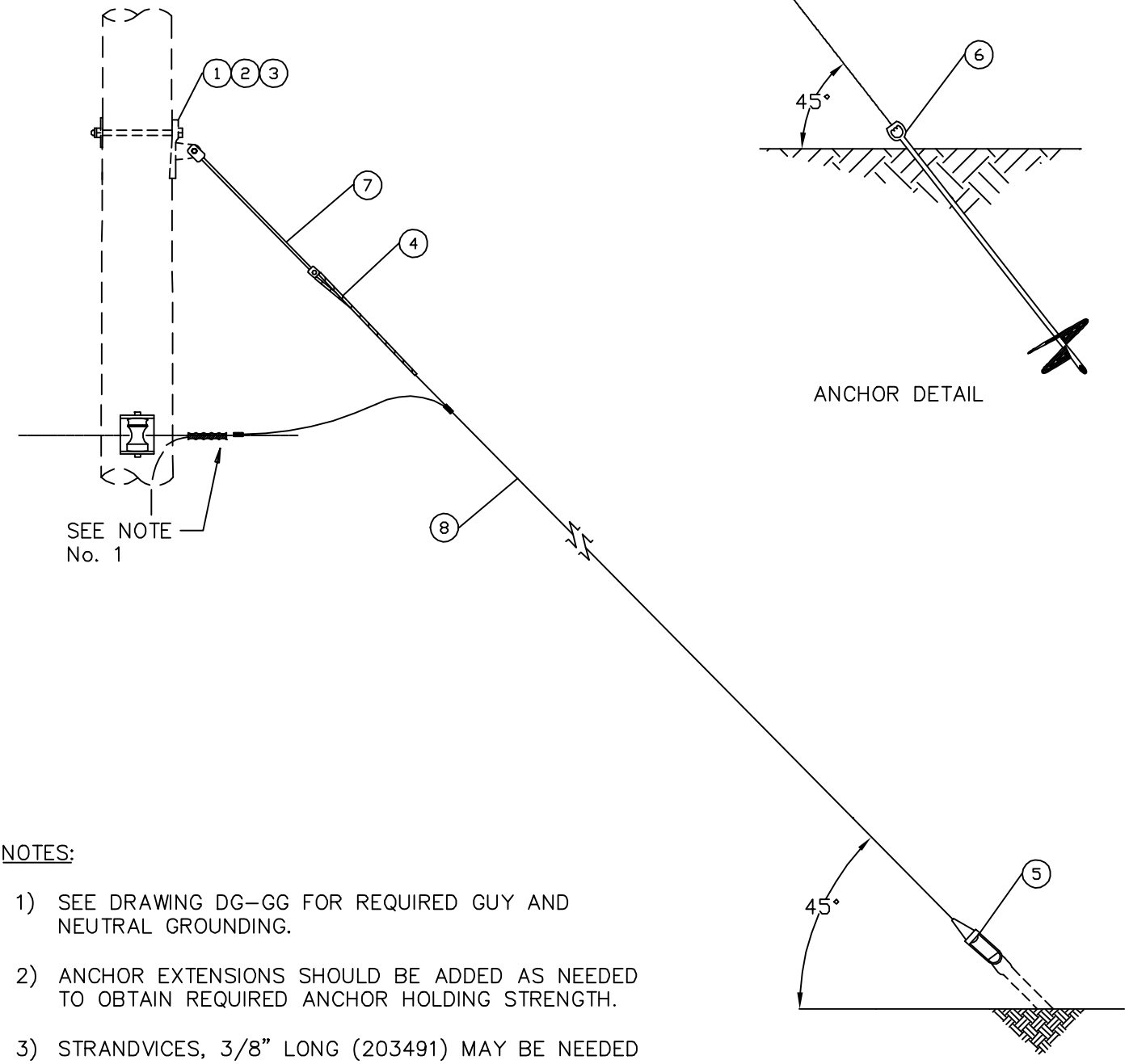

ANCHOR DETAIL

NOTES:

1) SEE DRAWING DG–GG FOR REQUIRED GUY AND NEUTRAL GROUNDING.

2) ANCHOR EXTENSIONS SHOULD BE ADDED AS NEEDED TO OBTAIN REQUIRED ANCHOR HOLDING STRENGTH.

3) STRANDVICES, 3/8" LONG (203491) MAY BE NEEDED WHEN ATTACHING 2 GUYS TO A SINGLE ANCHOR.

DWG. REF.	QTY 12	QTY 14	LIST OF MATERIALS DESCRIPTION	STOCK #
1	1	1	PLATES, P–345 GUY	203410
2	1	–	BOLTS, 3/4" X 12" MACHINE	202230
2	–	1	BOLTS, 3/4" X 14" MACHINE	202240
3	1	1	WASHERS, 3 X 3 CURVED	204450
4	1	1	GRIPS, 3/8" PREFORM GUY GDE–2107	207540
5	1	1	STRANDVICES, 3/8"	203490
6	1	1	ANCHOR, 10" SCREW	203980
7	*	*	ISOLATORS, STRAIN X REQUIRED LENGTH	–
8	*	*	WIRE, 3/8" GUY	204470
	1	1	GUARD, YELLOW GUY	208690
			* QUANTITY DEPENDS ON POLE HEIGHT & CONDUCTOR CLEARANCE	

GREENVILLE UTILITIES COMMISSION
GREENVILLE, NORTH CAROLINA

Greenville Utilities

DISTRIBUTION SINGLE DOWN GUY

DWN. JLS		DATE: 07/31/19	
CKD. KW		APPD. KW	
SCALE: N.T.S.			
DATE		DATE	REVISION

DWG. NO.
DG–12
DG–14

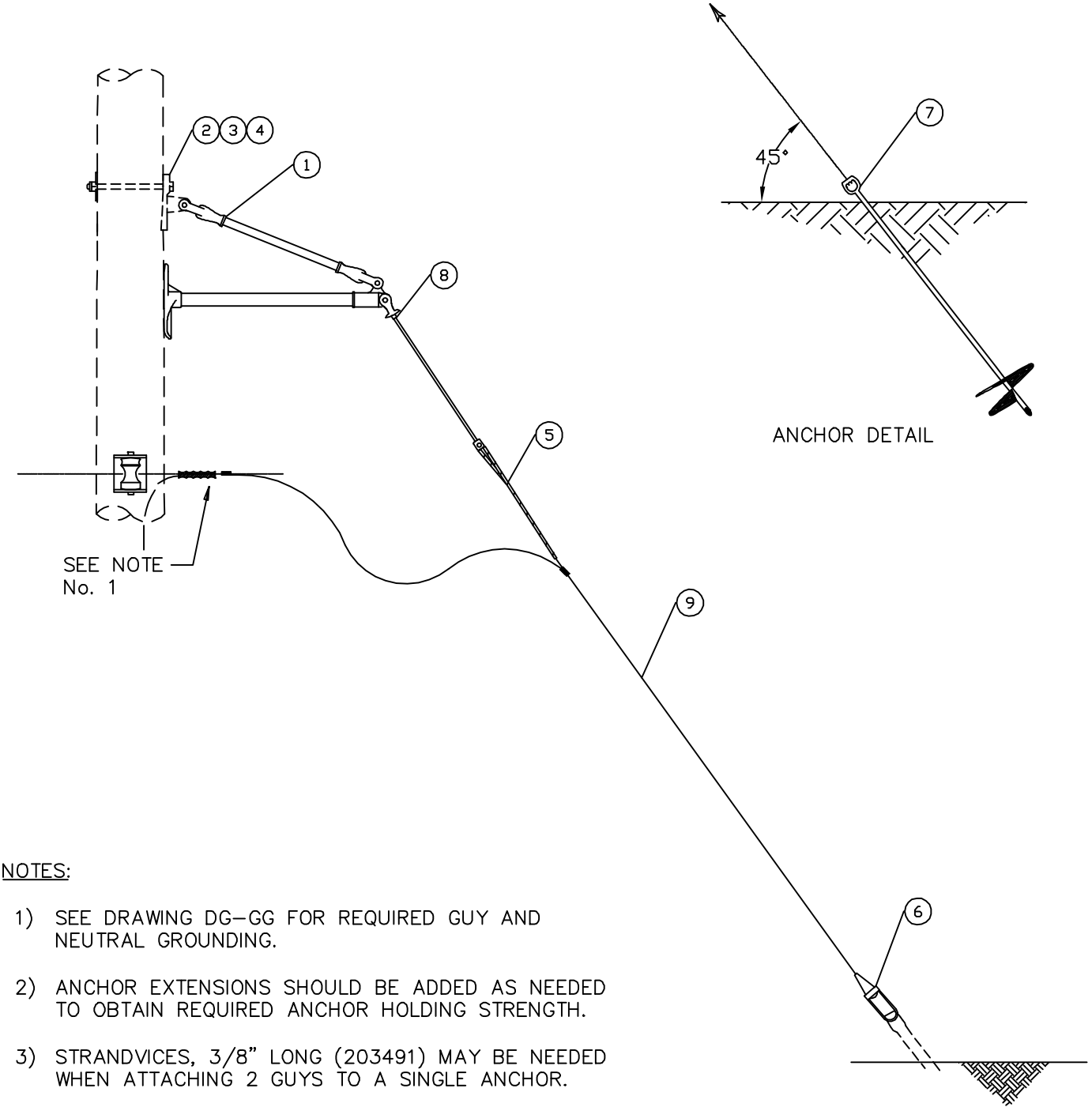

NOTES:

1) SEE DRAWING DG–GG FOR REQUIRED GUY AND NEUTRAL GROUNDING.

2) ANCHOR EXTENSIONS SHOULD BE ADDED AS NEEDED TO OBTAIN REQUIRED ANCHOR HOLDING STRENGTH.

3) STRANDVICES, 3/8" LONG (203491) MAY BE NEEDED WHEN ATTACHING 2 GUYS TO A SINGLE ANCHOR.

DWG. REF.	QTY 12	QTY 14	LIST OF MATERIALS DESCRIPTION	STOCK #
1	1	1	GUY, FIBERGLASS SIDEWALK	207420
2	1	1	PLATES, P–345 GUY	203410
3	1	–	BOLTS, 3/4" X 12" MACHINE	202230
3	–	1	BOLTS, 3/4" X 14" MACHINE	202240
4	1	1	WASHERS, 3 X 3 CURVED	204450
5	1	1	GRIPS, 3/8" PREFORM GUY GDE–2107	207540
6	1	1	STRANDVICES, 3/8"	203490
7	1	1	ANCHOR, 10" SCREW	203980
8	*	*	ISOLATORS, STRAIN X REQUIRED LENGTH	–
9	*	*	WIRE, 3/8" GUY	204470
	1	1	GUARD, YELLOW GUY	208690
			* QUANTITY DEPENDS ON POLE HEIGHT & CONDUCTOR CLEARANCE	

GREENVILLE UTILITIES COMMISSION
GREENVILLE, NORTH CAROLINA

Greenville Utilities

DISTRIBUTION SIDEWALK GUY

DWN. JLS		DATE: 08/28/19	
CKD. KW		APPD. KW	
SCALE: N.T.S.			
DATE		DATE	REVISION

DWG. NO.
SWG–12
SWG–14

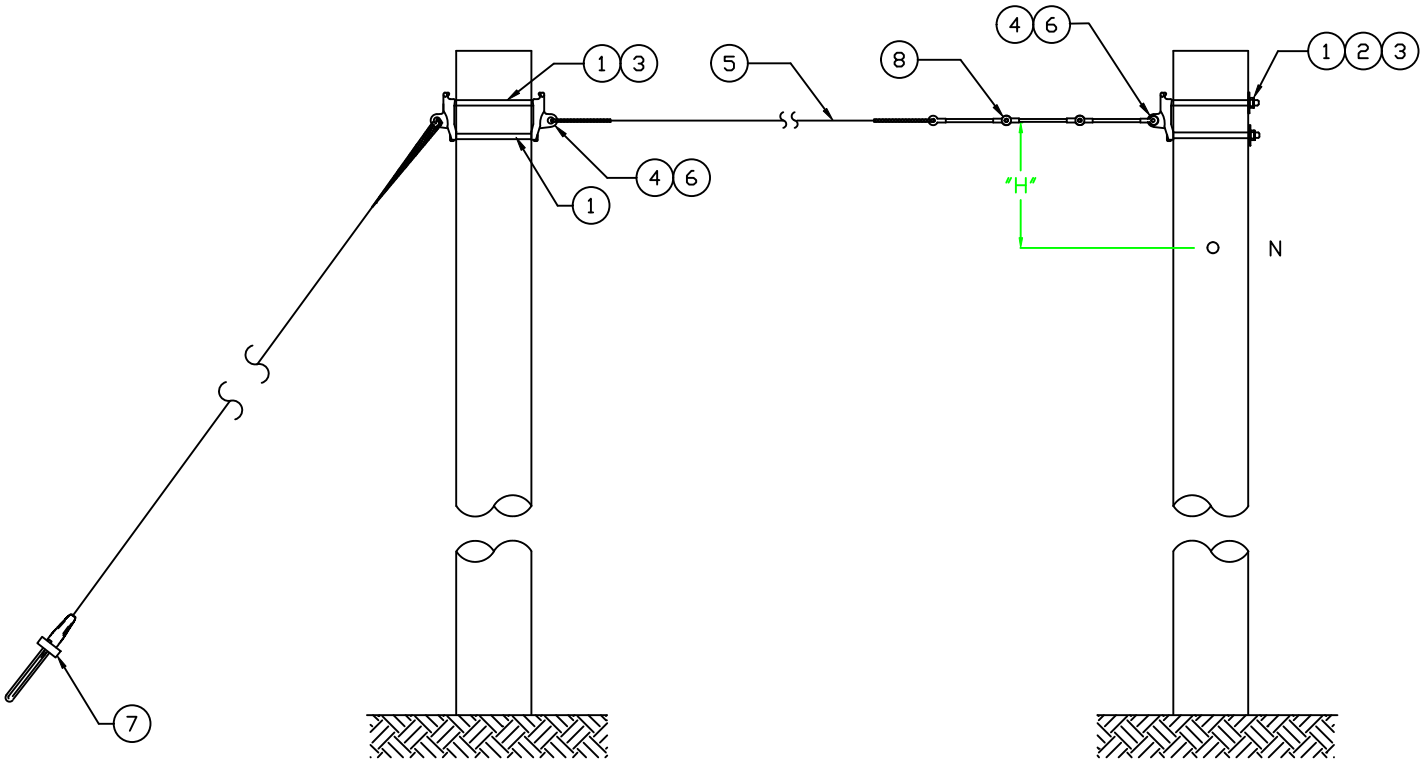

NOTES:

1. ALL GUYS MUST CONTAIN GUY STRAIN INSULATORS. THE COMBINED LENGTH OF STRAIN INSULATORS MUST BE GREATER THAN "H" (VERTICAL DISTANCE BETWEEN GUY WIRE AND NEUTRAL CONDUCTOR)
2. GROUNDS ARE TO STOP AT THE NEUTRAL POSITION EXCEPT TO RISE TO A LIGHTNING ARRESTER OR TRANSFORMER.
3. GUY ATTACHMENT POINT SHALL BE 9" BELOW CONDUCTOR ATTACHMENT POINT.

DWG. REF.	QTY	LIST OF MATERIALS DESCRIPTION
1	4	BOLT, MACHINE 5/8" X REQUIRED LENGTH
2	2	WASHER, SQUARE 2 1/4"
3	4	WASHER, LOCK 5/8"
4	3	PLATES, P-345 GUY
5	*	WIRE, 3/8" GUY
6	3	GRIPS, 3/8" PREFORM GUY
7	1	STRANDVICES, 3/8"
8	*	GUY, STRAIN INSULATOR
* QUANTITY VARIES. USE AS REQUIRED		

GREENVILLE UTILITIES COMMISSION
GREENVILLE, NORTH CAROLINA

Greenville Utilities

SPAN GUY – WITH PREFORMED GRIPS.

DWN. DRB		DATE: 12/21/2022	
CKD. JLS		APPD. JLS	
SCALE: N.T.S.			
DATE		DATE	REVISION
		10/31/23	1

DWG. NO.
DG-SG

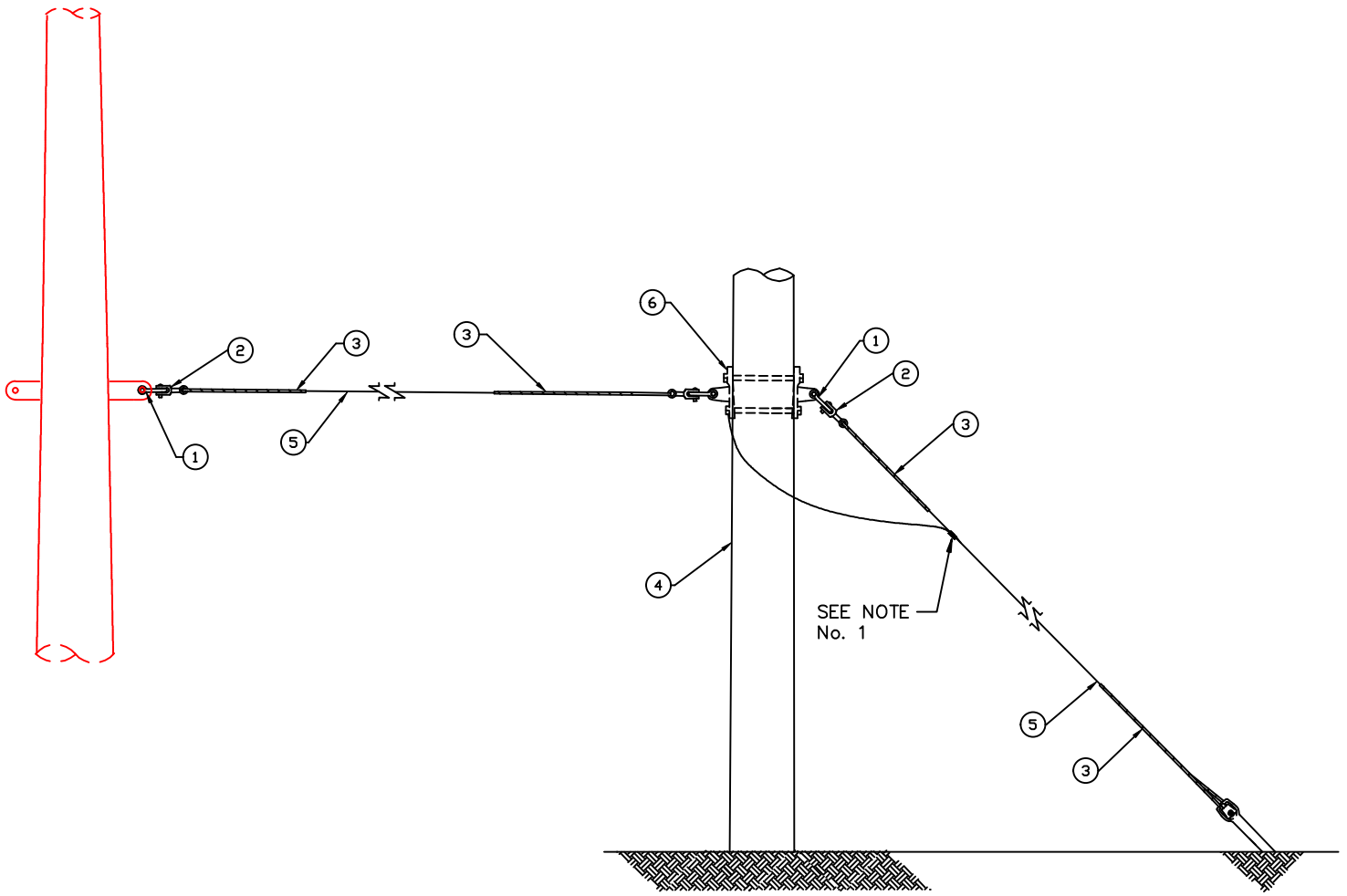

NOTES:

1) SEE DRAWING TG–GG FOR REQUIRED GUY GROUNDING TO BE INCLUDED WITH THE GUY UNIT.

2) SPECIFY SIZE OF GUY WIRE, MAXIMUM ULTIMATE RATED STRENGTH TO BE 33,000 LBS. REFER TO SPECIFIC WIRE SPECIFICATIONS FOR RATED STRENGTH.

3) GUY STRAIN INSULATOR MAY BE REQUIRED. SEE STRUCTURE DRAWING/MATERIAL LIST TO VERIFY.

DWG. REF.	QTY	LIST OF MATERIALS DESCRIPTION
1	3	ANCHOR SHACKLE, 30,000 LBS (MINIMUM)
2	3	CLEVIS – THIMBLE TYPE (40,000 LBS)
3	4	GUY – GRIP, PREFORMED
4	1	WOODEN POLE
5	*	GUY – WIRE
6	2	PLATE, P–345 GUY
* GUY WIRE AS REQUIRED		

GREENVILLE UTILITIES COMMISSION
GREENVILLE, NORTH CAROLINA

Greenville Utilities

SPAN GUY – WITH PREFORMED GRIPS.

DWN. DRB		DATE: 5/23/2022	
CKD. JLS		APPD. JLS	
SCALE: N.T.S.			
DATE		DATE	REVISION

DWG. NO.
TG–SG

SOIL CLASSIFICATION DATA				
CLASS	COMMON SOIL-TYPE DESCRIPTION	GEOLOGICAL SOIL CLASSIFICATION	PROBE VALUES IN.-LBS. (NM)	TYPICAL BLOW COUNT "N" PER ASTM-D1586
5	MEDIUM DENSE COARSE SANDS AND SANDY GRAVEL; STIFF TO VERY STIFF SILTS AND CLAYS	SAPROLITES, RESIDUAL SOILS	300-400 (34-45)	14-25
6	LOOSE TO MEDIUM DENSE FINE TO COARSE SANDS; STIFF CLAYS AND SILTS	DENSE HYDRAULIC FILL; COMPACTED FILL; RESIDUAL SOILS	200-300 (23-34)	7-14
7	LOOSE FINE SANDS; ALLUVIUM; LOESS; MEDIUM TO STIFF AND VARIED CLAYS; FILL	FLOOD PLAIN SOILS; LAKE CLAYS; ADOBE; GUMBO, FILL	100-200 (11-23)	4-8

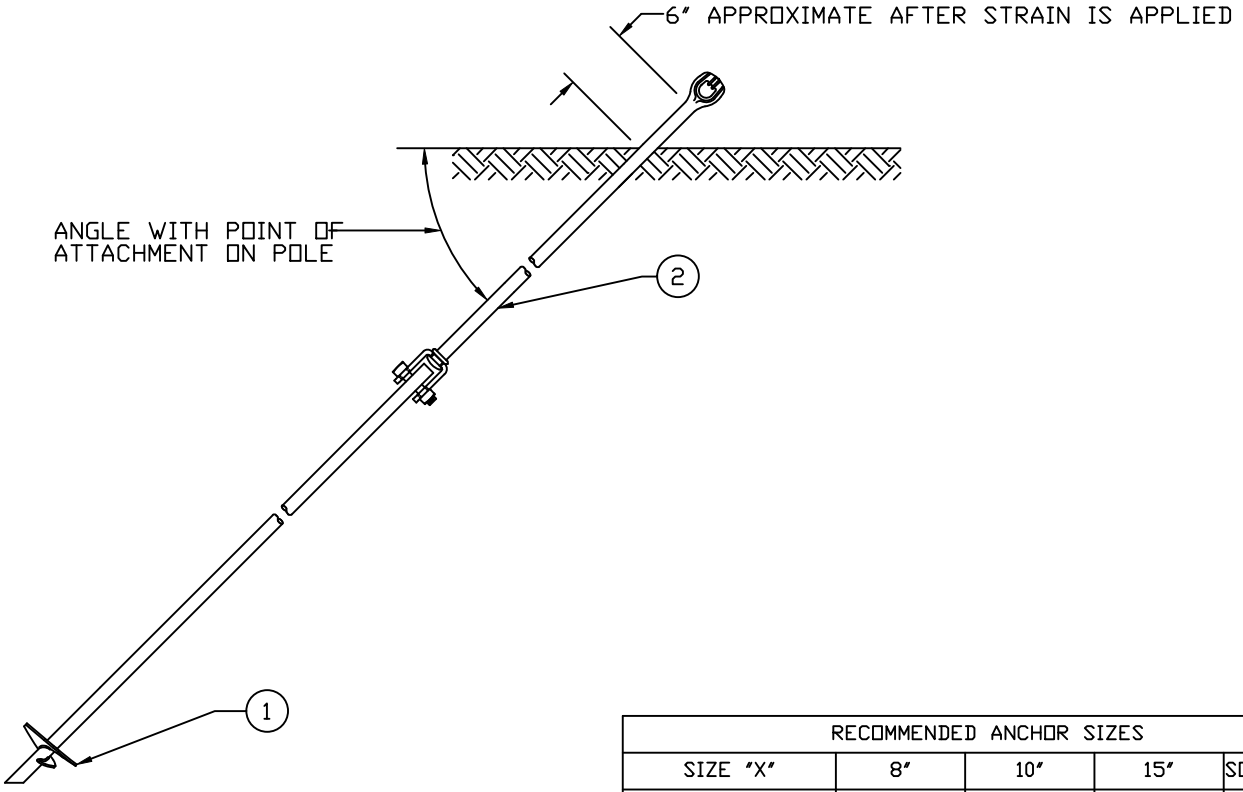

RECOMMENDED ANCHOR SIZES				
SIZE "X"	8"	10"	15"	SOIL CLASS
HOLDING STRENGTH	12,000 LBS	18,000 LBS	28,000 LBS	5
HOLDING STRENGTH	9,000 LBS	14,000 LBS	24,000 LBS	6
HOLDING STRENGTH	6,000 LBS	10,000 LBS	20,000 LBS	7

NOTES:

1. USE THE NUMBER OF EXTENSION RODS NEEDED TO REACH THE DEPTH WHERE MAXIMUM HOLDING POWER IS OBTAINED.
2. GROUNDING OF THE GUY IS NOT RECOMMENDED TO PREVENT CATHODIC CORROSION OF THE ANCHOR.
3. ALL GUYS MUST CONTAIN A GUY STRAIN INSULATOR SUFFICIENT TO PROVIDE TWO FEET OF AIR CLEARANCE.

DWG. REF.	LIST OF MATERIALS ea.	DESCRIPTION
1	1	ANCHOR, 6FT LONG
2	1	ANCHOR, EXTENSION 2 FT
	*	ANCHOR, EXTENSION 4 FT

* QUANTITY AS REQUIRED

GREENVILLE UTILITIES COMMISSION
GREENVILLE, NORTH CAROLINA

Greenville Utilities

DISTRIBUTION ANCHOR ASSEMBLY

DWN. DRB		DATE: 12/21/23	
CKD. JLS		APPD. JLS	
SCALE: N.T.S.			
DATE		DATE	REVISION

DWG. NO.

DA

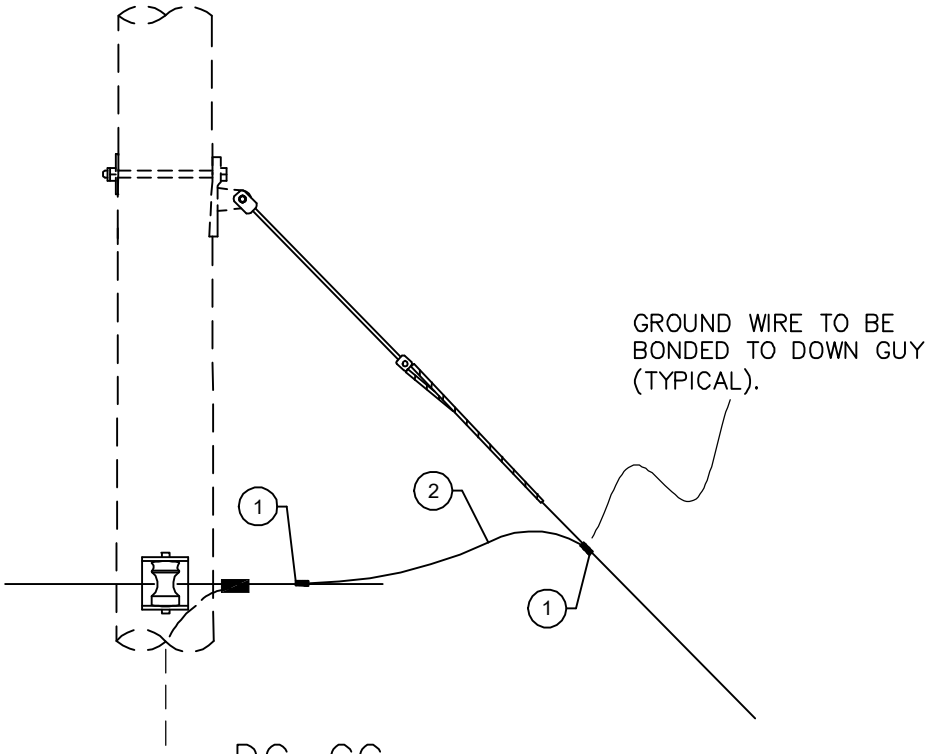

DG–GG

NOTES:

1) NEUTRAL SHALL BE GROUNDED AT EVERY TRANSFORMER LOCATION AND ADDITIONAL POINTS TO TOTAL NOT LESS THAN 4 GROUNDS PER MILE. (TYPICALLY 1 GROUND EVERY 4 POLES)

2) WHEN MULTIPLE GUYS ARE PRESENT, GUYS WILL BE TIED TOGETHER USING THE LAST GUY TO GROUND TO THE NEUTRAL. ADD WIRE AND SQUEEZONS AS NEEDED.

3) SEE DRAWING DM–9 FOR DRIVEN GROUND ROD GROUNDING ASSEMBLY.

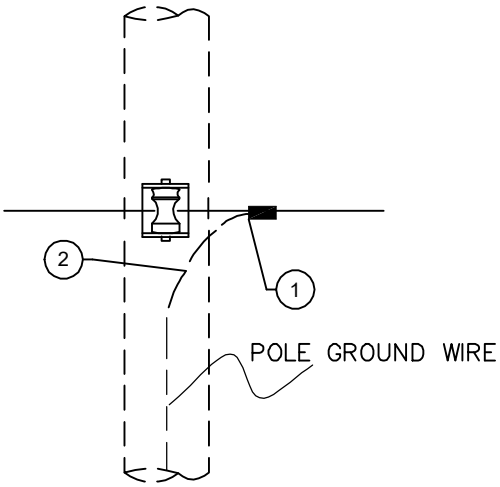

DN–GG

DWG. REF.	QTY DG	QTY DN	LIST OF MATERIALS DESCRIPTION	STOCK #
1	2	1	SQUEEZONS, #2	203050
2	*	*	WIRE, #4 SOFT DRAWN COPPER (ft)	204490
			* As Required	

GREENVILLE UTILITIES COMMISSION
GREENVILLE, NORTH CAROLINA

Greenville Utilities

DISTRIBUTION GUY AND NEUTRAL GROUNDING GUIDE

DWN. JLS		DATE: 08/12/19	
CKD. KW		APPD. KW	
SCALE: N.T.S.			
DATE		DATE	REVISION

DWG. NO.
DG–GG
DN–GG

NG-1/0 SUB-ASSY

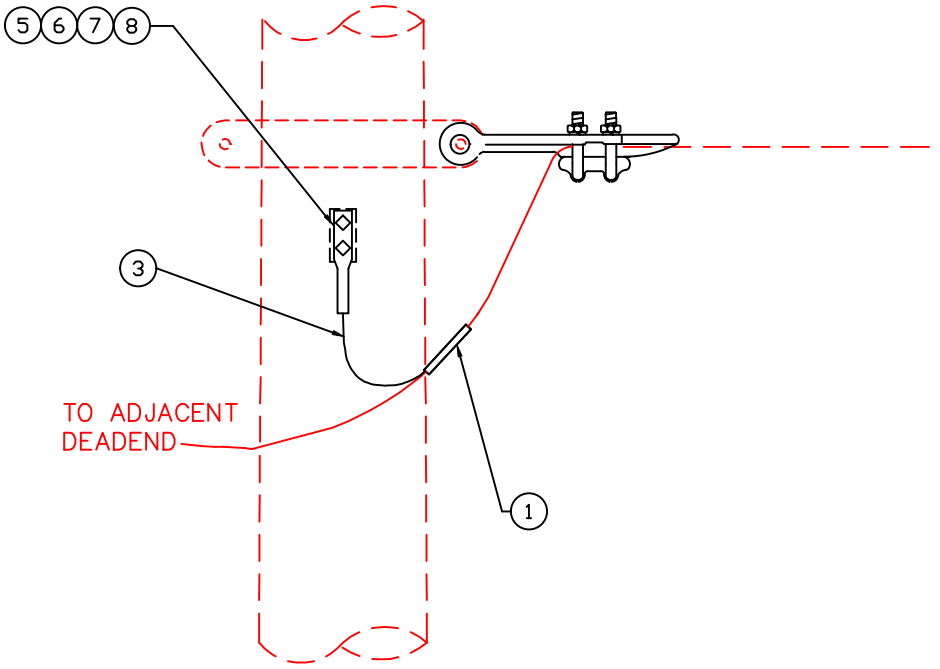

NG-336 SUB-ASSY

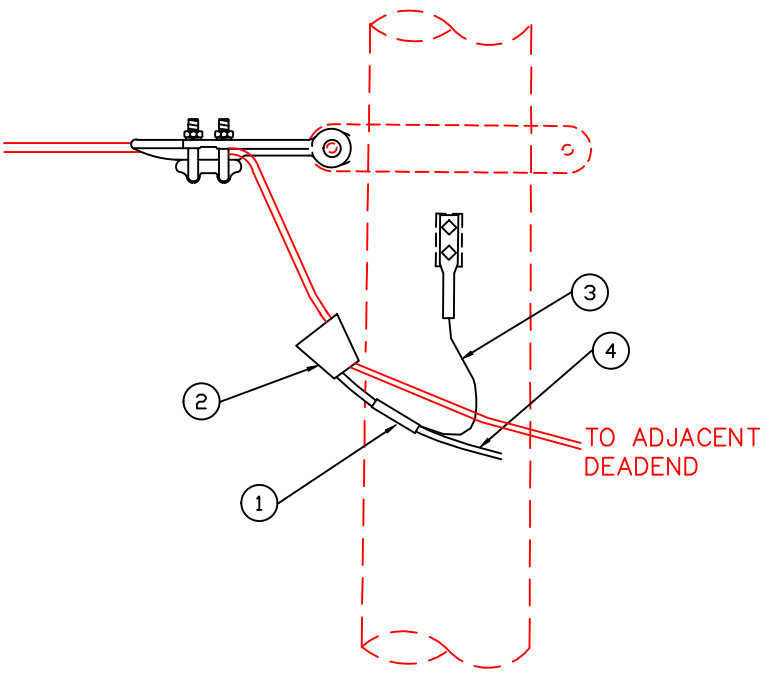

DWG. REF.	NG-1/0 QTY	NG-336 QTY	LIST OF MATERIALS DESCRIPTION
1	1	1	SQUEEZEON CONNECTOR #2
2		1	AMPACT CONNECTOR 336-1/0
3	*	*	WIRE, #4 SOFT DRAWN
4		*	WIRE 1/0 ACSR
5	1	1	#4 COPPER 2-HOLE NEMA PAD
6	2	2	BOLT MACHINE, 1/2" X 1"
7	2	2	FLAT WASHER, 1/2"
8	2	2	LOCK WASHER, 1/2"
*LENGTH OF WIRE AS REQUIRED			

GREENVILLE UTILITIES COMMISSION
GREENVILLE, NORTH CAROLINA

Greenville Utilities

NEUTRAL GROUNDING ASSEMBLY

DWN. DRB		DATE: 06/01/2022	
CKD. JLS		APPD. JLS	
SCALE: N.T.S.			
DATE		DATE	REVISION

DWG. NO.
NG-1

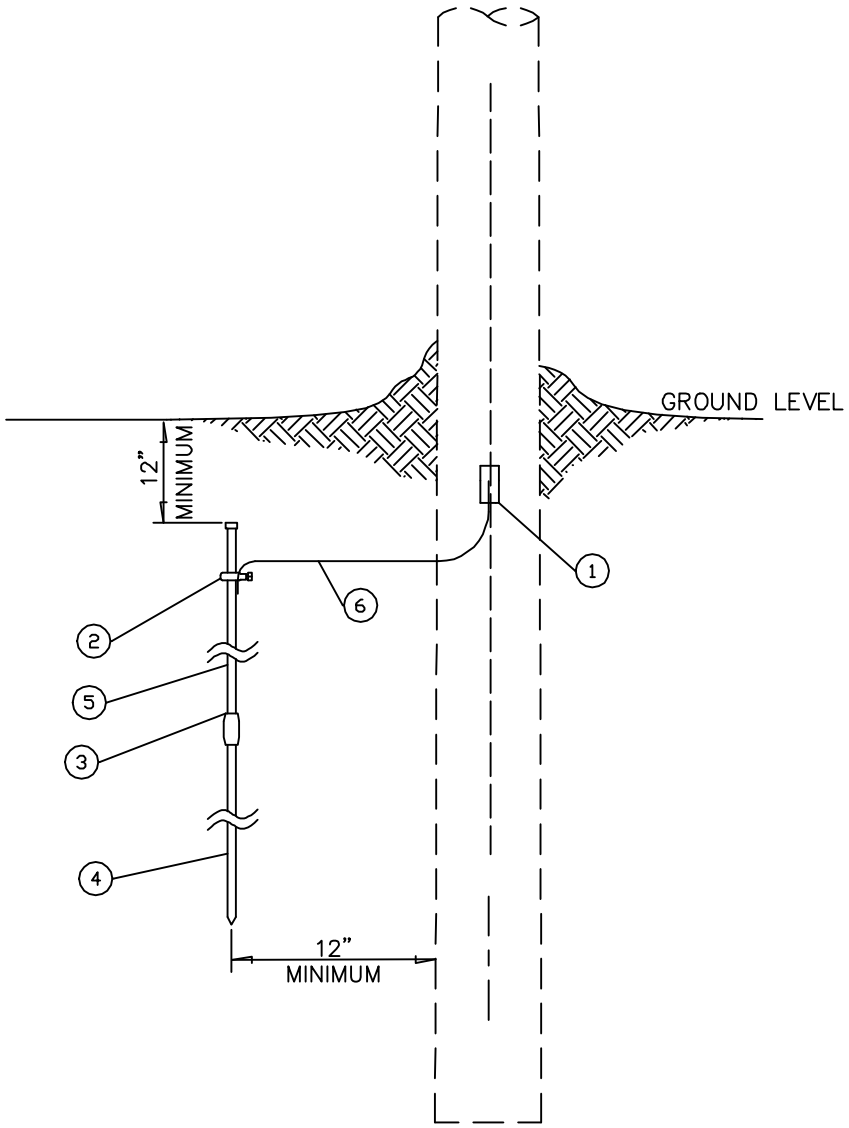

NOTES:

1) MAXIMUM GROUND RESISTANCE READING SHALL BE 25 OHMS. IF THE CLAMP–ON RESISTANCE MEASUREMENT IS USED, THE GROUND ROD SHALL BE INSTALLED AND TEMPORARILY BONDED UNTIL THE GROUND RESISTANCE READING IS TAKEN.

2) ADDITIONAL ROD SECTIONS SHALL BE ADDED AS NECESSARY TO REDUCE RESISTANCE TO 25 OHMS MAXIMUM. HORIZONTAL SPACING BETWEEN ADDITIONAL RODS SHALL BE NO LESS THAN 6 FEET.

3) GROUND ROD SHALL BE INSTALLED IN UNDISTURBED SOIL.

DWG. REF.	QTY	LIST OF MATERIALS	
		DESCRIPTION	STOCK #
1	*	SQUEEZONS, YC4C4 COPPER	206240
2	1	GROUND – ROD CLAMP, 5/8"	NS
3	1	GROUND – ROD COUPLING, 5/8"	NS
4	1	GROUND – ROD, 5/8" x 12'–0"	207440
5	1	GROUND – ROD, 5/8" x 8'–0"	203850
6	*	GROUND – WIRE, #4 (ft.)	204490
		* – As Required	

GREENVILLE UTILITIES COMMISSION
GREENVILLE, NORTH CAROLINA

Greenville Utilities

DRIVEN GROUND ROD GROUNDING ASSEMBLY – WOOD POLE

DWN. JLS		DATE: 08/13/19	
CKD. KW		APPD. KW	
SCALE: N.T.S.			
DATE		DATE	REVISION

DWG. NO.

DM–9

FRONT VIEW

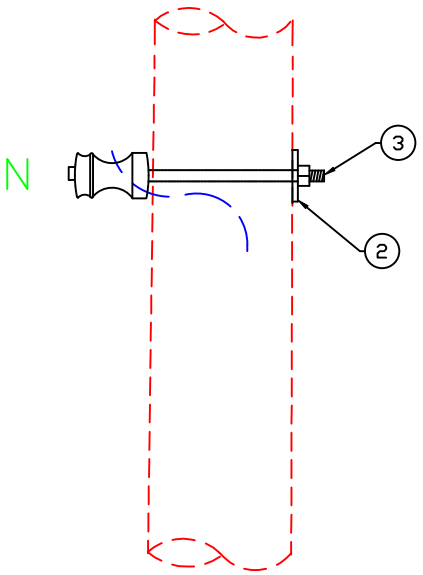

SIDE VIEW

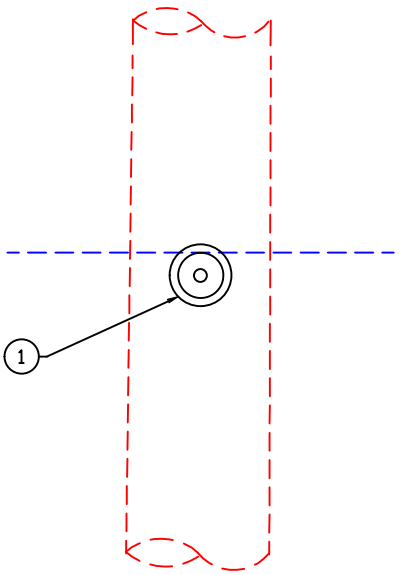

DWG. REF.	QTY	LIST OF MATERIALS
		DESCRIPTION
1	1	INSULATOR, SPOOL "J151"
2	1	WASHER, SQUARE, 2 1/4"
3	1	SPOOL BOLT X REQ. LENGTH
4	1	PREFORM WRAPLOCK X REQ. LENGTH, WIRE SIZE

GREENVILLE UTILITIES COMMISSION
GREENVILLE, NORTH CAROLINA

Greenville Utilities

NEUTRAL SPOOL ASSEMBLY

DWN. DRB		DATE: 08/18/2022	
CKD. JLS		APPD. JLS	
SCALE: N.T.S.			
DATE		DATE	REVISION

DWG. NO.

NS-1

OVERHEAD VIEW

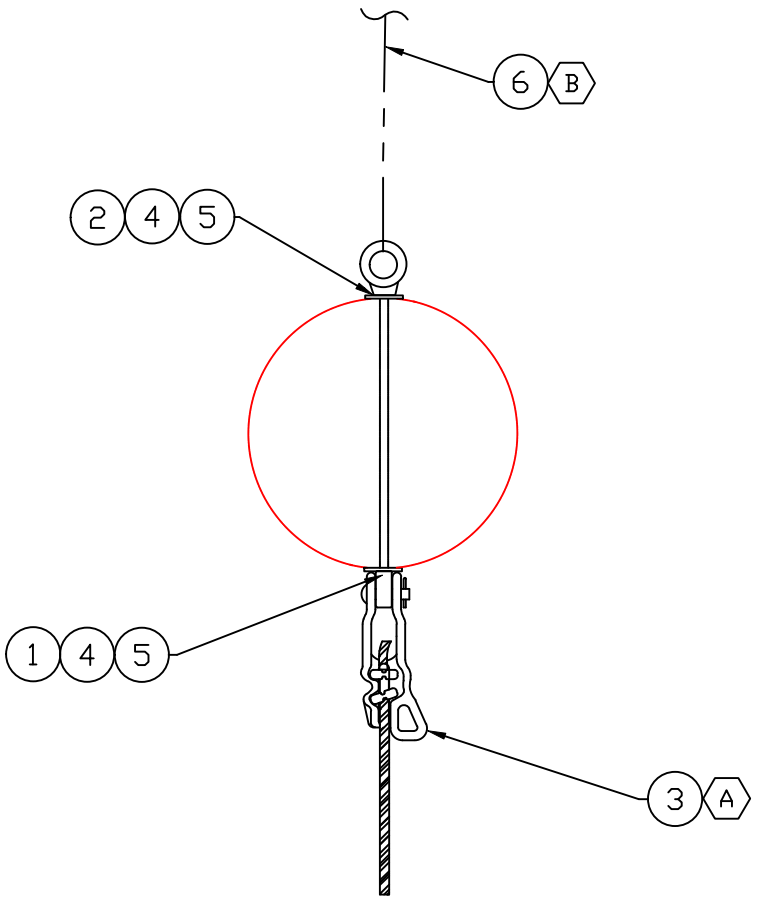

NOTES:

(A) SELECT DEADEND SHOE APPROPRIATE FOR WIRE SIZE.

(B) REFERENCE DWG TG-21 FOR SINGLE DOWN GUY ASSEMBLY.

DWG. REF.	QTY	LIST OF MATERIALS DESCRIPTION
1	1	EYE BOLT, 5/8" X LENGTH"
2	1	5/8" EYE NUT
3	1	DEADEND SHOE
4	2	WASHER, SQUARE, 4" X 4" X 13/16" HOLE
5	2	SPRING LOCK WASHER, 5/8"
6	1	SINGLE DOWN GUY

GREENVILLE UTILITIES COMMISSION
GREENVILLE, NORTH CAROLINA

Greenville Utilities

NEUTRAL DEADEND

DWN. DRB | DATE: 06/03/2022

CKD. JLS | APPD. JLS

SCALE: N.T.S.

DATE		DATE	REVISION

DWG. NO.
NDE-1

OVERHEAD VIEW

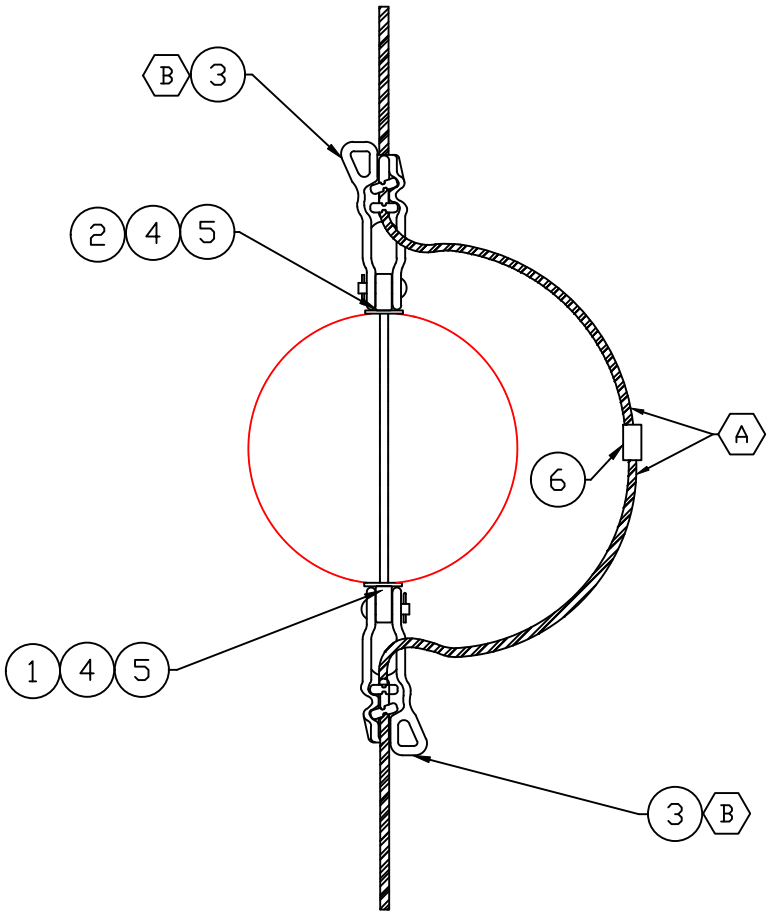

NOTES:

Ⓐ MEASURE AND TRIM EXCESS NEUTRAL CONDUCTORS AS REQUIRED AND CONNECT ENDS WITH SQUEEZON/AMPACT, ITEM (6).

Ⓑ SELECT DEADEND SHOE & SQUEEZON/AMPACT APPROPRIATE FOR WIRE SIZE.

DWG. REF.	QTY	LIST OF MATERIALS DESCRIPTION
1	1	EYE BOLT, 5/8" X LENGTH"
2	1	5/8" EYE NUT
3	2	DEADEND SHOE
4	2	WASHER, SQUARE, 4" X 4" X 13/16" HOLE
5	2	SPRING LOCK WASHER, 5/8"
6	1	SQUEEZON/AMPACT (REQUIRED SIZE)

GREENVILLE UTILITIES COMMISSION
GREENVILLE, NORTH CAROLINA

Greenville Utilities

NEUTRAL DOUBLE DEADEND

DWN. DRB		DATE: 06/03/2022	DWG. NO.
CKD. JLS		APPD. JLS	NDDE-1
SCALE: N.T.S.			
DATE		DATE	REVISION

SIDE VIEW

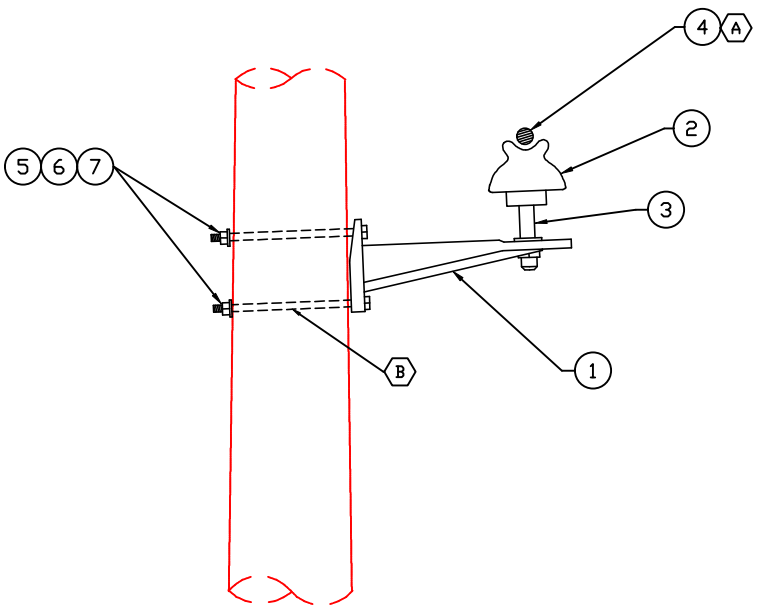

NOTES:

Ⓐ SELECT INSULATOR & WRAP LOCK APPROPRIATE FOR WIRE SIZE.

Ⓑ SELECT BOLT LENGTH APPROPRIATE FOR POLE DIAMETER

DWG. REF.	QTY	LIST OF MATERIALS DESCRIPTION
1	1	BRACKET, 18" FIBERGLASS
2	1	INSULATOR, PIN TYPE
3	1	PIN SHANK
4	1	PREFORM, WRAP LOCK
5	2	BOLT, MACHINE 5/8" REQUIRED LENGTH
6	2	WASHERS, 2 1/4" SQUARE
7	2	SPRING LOCK WASHER 5/8"

GREENVILLE UTILITIES COMMISSION
GREENVILLE, NORTH CAROLINA

Greenville Utilities

MIF BRACKET ASSEMBLY

DWN. DRB		DATE: 06/06/2022	
CKD. JLS		APPD. JLS	
SCALE: N.T.S.			
DATE		DATE	REVISION

DWG. NO.
MIF-1

SIDE VIEW

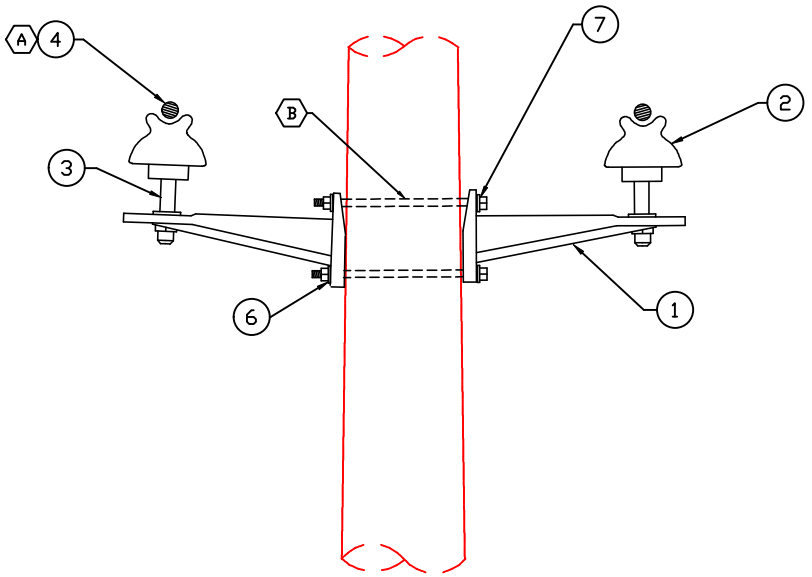

NOTES:

Ⓐ SELECT INSULATOR & WRAP LOCK APPROPRIATE FOR WIRE SIZE.

Ⓑ SELECT BOLT LENGTH APPROPRIATE FOR POLE DIAMETER

DWG. REF.	QTY	LIST OF MATERIALS DESCRIPTION
1	2	BRACKET, 18" FIBERGLASS
2	2	INSULATOR, PIN TYPE
3	2	PIN SHANK
4	2	PREFORM, WRAP LOCK
5	2	BOLT, MACHINE 5/8" REQUIRED LENGTH
6	2	SPRING LOCK WASHER 5/8"

GREENVILLE UTILITIES COMMISSION
GREENVILLE, NORTH CAROLINA

Greenville Utilities

DOUBLE MIF BRACKET ASSEMBLY

DWN. DRB		DATE: 06/06/2022	
CKD. JLS		APPD. JLS	
SCALE: N.T.S.			
DATE		DATE	REVISION

DWG. NO.
MIFD-1

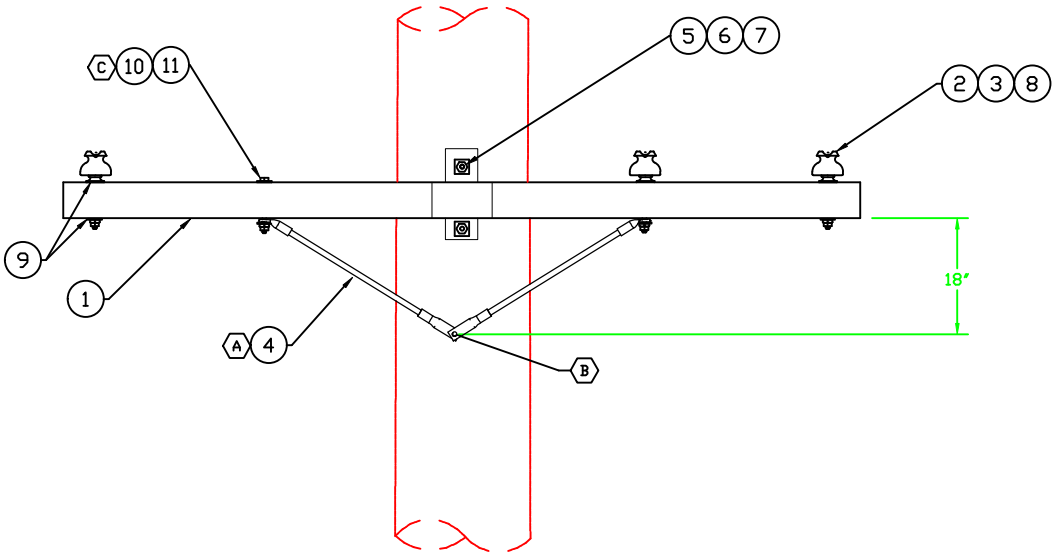

SIDE VIEW

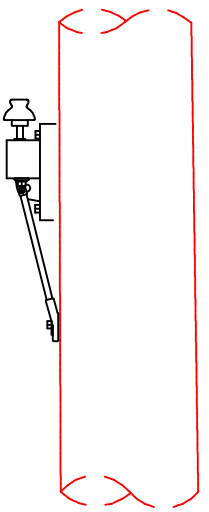

NOTES:

1) INSULATOR ITEM(2) & ITEM(3) WILL VARY BASED ON WIRE SIZE.

Ⓐ MOUNT BRACE USING EXISTING HOLES IN CROSSARM.

Ⓑ HOLE TO BE FIELD DRILLED AT SPECIFIED LOCATION.

Ⓒ INSTALL 3 X 3 SQUARE WASHER, ITEM(9), ON TOP AND BOTTOM OF CROSSARM.

DWG. REF.	XRM-10A QTY	LIST OF MATERIALS DESCRIPTION
1	1	ARMS, 10' H/T FIBERGLASS
2	3	PIN INSULATOR
3	3	PREFORMS, WRAP LOCK
4	1	CROSSARM BRACE
5	3	BOLT, MACHINE 5/8" X LENGTH"
6	3	SPRING LOCK WASHER, 5/8"
7	3	WASHER, SQ. 4 X 4 X 13/16"
8	3	CROSSARM PINS
9	8	3 X 3 SQUARE WASHERS
10	1	5/8" x 8" BOLT
11	1	5/8" LOCK WASHER

GREENVILLE UTILITIES COMMISSION
GREENVILLE, NORTH CAROLINA

Greenville Utilities

10' TANGENT DISTRIBUTION CROSSARM

DWN. DRB		DATE: 5/27/2022	DWG. NO.
CKD. JLS		APPD. JLS	XRM-10A
SCALE: N.T.S.			
DATE		DATE	REVISION

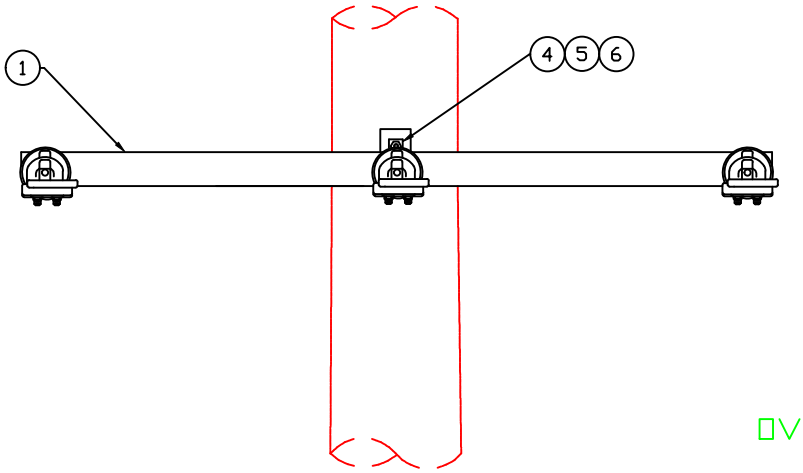

OVERHEAD VIEW

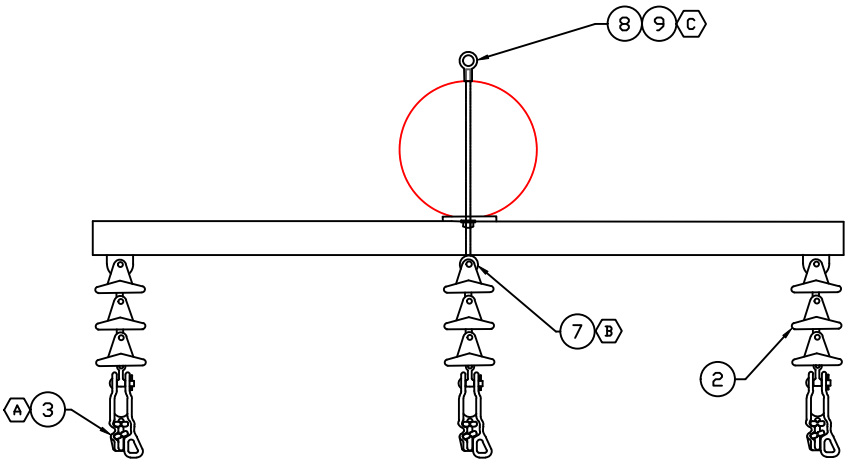

NOTES:

Ⓐ SELECT DEADEND SHOE APPROPRIATE FOR WIRE SIZE.

Ⓑ EYEBOLT TO BE INSTALLED IN TOP HOLE OF CROSSARM BRACKET, AS SHOWN.

Ⓒ GUY ASSEMBLY NOT SHOWN. SEE DWG TG-21 FOR REFERENCE.

DWG. REF.	XRM-10B QTY	LIST OF MATERIALS DESCRIPTION
1	1	ARMS, 10' DE FIBERGLASS
2	3	INSULATORS, POLY DE BELLS
3	3	DEADEND SHOE
4	1	BOLT, MACHINE 5/8" X LENGTH"
5	2	SPRING LOCK WASHER, 5/8"
6	3	WASHER, SQ. 4 X 4 X 13/16"
7	1	EYE BOLT, 5/8" X LENGTH"
8	1	5/8" EYE NUT
9	1	GUY ASSEMBLY

GREENVILLE UTILITIES COMMISSION
GREENVILLE, NORTH CAROLINA

Greenville Utilities

10' DEADEND DISTRIBUTION CROSSARM

DWN. DRB | DATE: 5/27/2022

CKD. JLS | APPD. JLS

SCALE: N.T.S.

DATE		DATE	REVISION

DWG. NO.
XRM-10DE

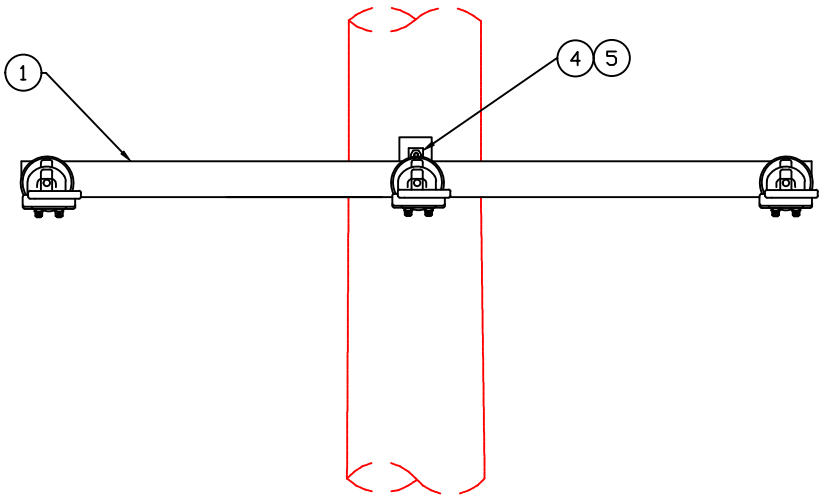

OVERHEAD VIEW

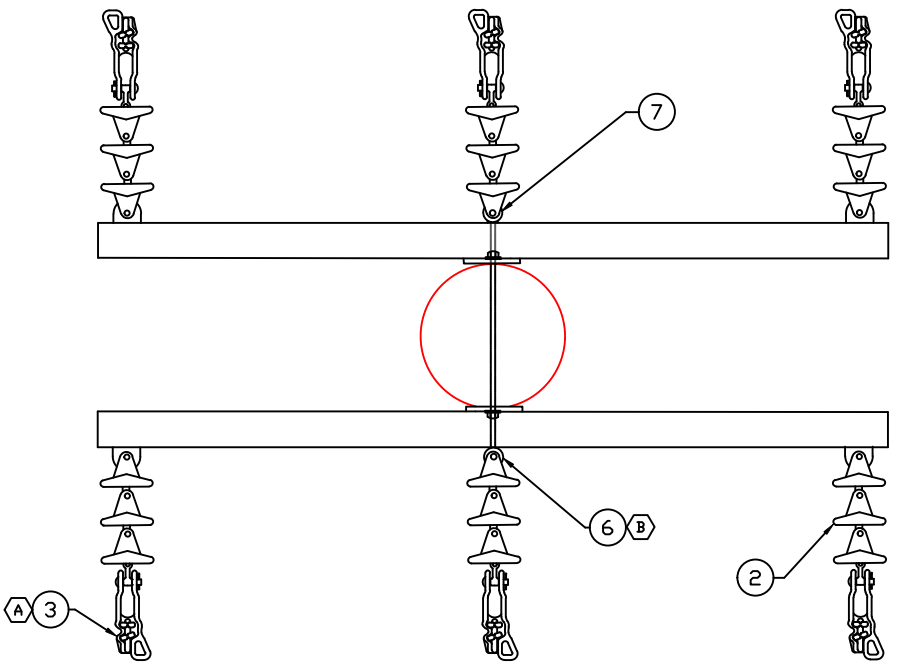

NOTES:

Ⓐ SELECT DEADEND SHOE APPROPRIATE FOR WIRE SIZE.

Ⓑ EYEBOLT TO BE INSTALLED IN TOP HOLE OF CROSSARM BRACKET, AS SHOWN.

DWG. REF.	QTY	LIST OF MATERIALS DESCRIPTION
1	2	ARMS, 10' DE FIBERGLASS
2	6	INSULATORS, POLY DE BELLS
3	6	DEADEND SHOE
4	1	BOLT, MACHINE 5/8" X LENGTH"
5	2	SPRING LOCK WASHER, 5/8"
6	1	EYE BOLT, 5/8" X LENGTH"
7	1	5/8" EYE NUT

GREENVILLE UTILITIES COMMISSION
GREENVILLE, NORTH CAROLINA

Greenville Utilities

10' DOUBLE DEADEND DISTRIBUTION CROSSARM

DWN. DRB		DATE: 5/27/2022	
CKD. JLS		APPD. JLS	
SCALE: N.T.S.			
DATE		DATE	REVISION

DWG. NO.
XRM-10DDE

NOTES:

1. THE TABLE BELOW SHALL BE COMPLETED FOR EACH PROJECT.
2. SUITABLE SUSPENSION CLAMPS MUST BE SELECTED FOR THE CONDUCTOR BEING USED. THE FOLLOWING ARE TO BE CONSIDERED: TYPE OF CONDUCTOR, DIAMETER OF CONDUCTOR (CONSIDERING ARMOR RODS AND/OR LINERS), ETC.
3. THE CAPACITY OF THE HARDWARE MUST BE EQUAL TO OR GREATER THAN THE SPECIFIED MECHANICAL LOAD OF THE INSULATOR UNITS SHOWN IN THE TABLE BELOW.

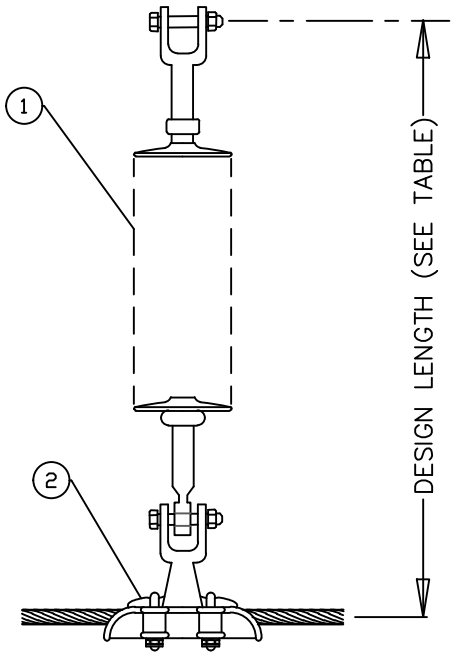

TANGENT ASSEMBLY
DM–1AM (OR) DM–1BM

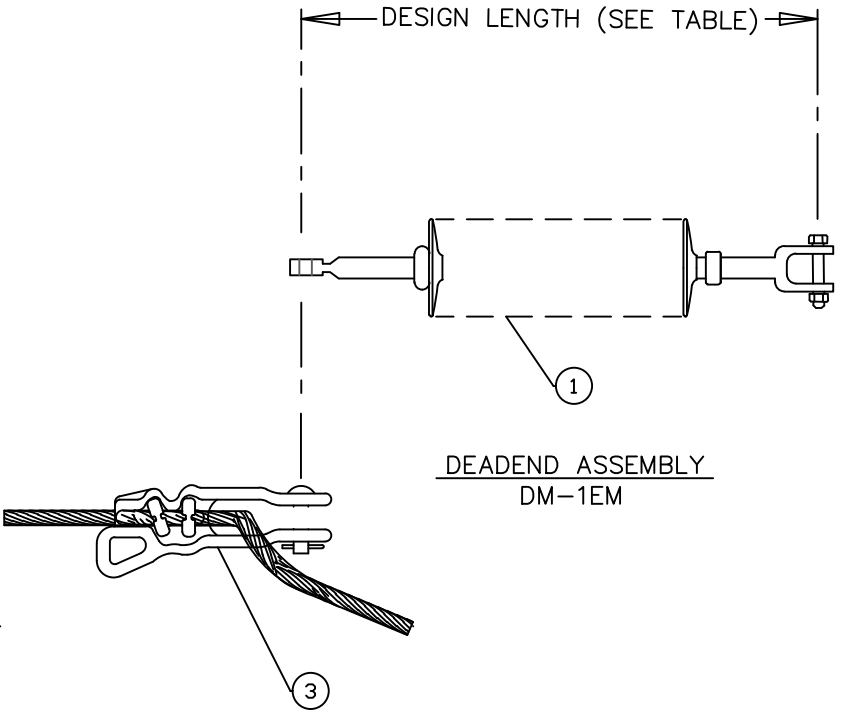

DEADEND ASSEMBLY
DM–1EM

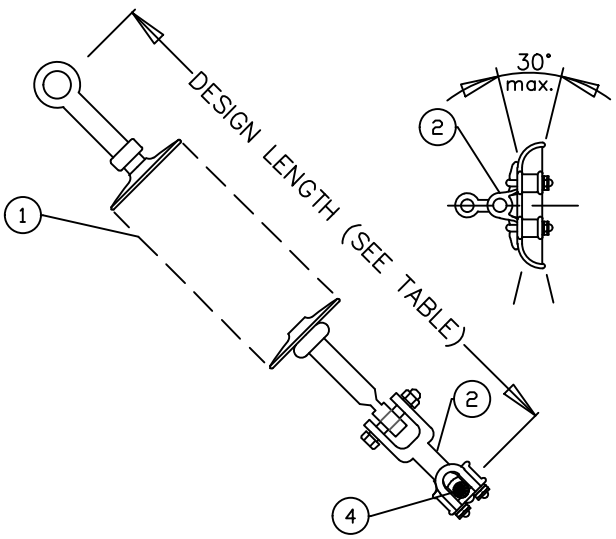

ANGLE ASSEMBLY
DM–1CM

15 KV STOCK NUMBER: 206920	ASSEMBLY		
	TANGENT	ANGLE	DEADEND
QUANTITY OF UNITS	1	1	1
INSULATION LEVEL (kV)	18	18	18
LEAKAGE DISTANCE (in.)	16	16	16
SPEC. MECH. LOAD (lb.)	10,000	10,000	10,000
INSULATOR WEIGHT (lb.)	2.3	2.3	2.3
DESIGN LENGTH (in.)	12.5	12.5	12.5
COLOR OF UNITS	GRAY	GRAY	GRAY

LIST OF MATERIALS

DWG. REF.	ITEM	DESCRIPTION
1		INSULATOR, SUSPENSION. POLYMER
2		CLAMP, SUSPENSION x REQ. CONDUCTOR SIZE
3		DEADEND SHOE, x REQ. CONDUCTOR SIZE
4	*	ARMOR ROD x REQ. CONDUCTOR SIZE

* Armor Rod not required if suspension clamp is cushioned

GREENVILLE UTILITIES COMMISSION
GREENVILLE, NORTH CAROLINA

Greenville Utilities

SUSPENSION INSULATOR ASSEMBLY

DWN. DRB | DATE: 06/01/2022
CKD. JLS | APPD. JLS
SCALE: N.T.S.

DWG. NO.
DM–1

DATE	DATE	REVISION

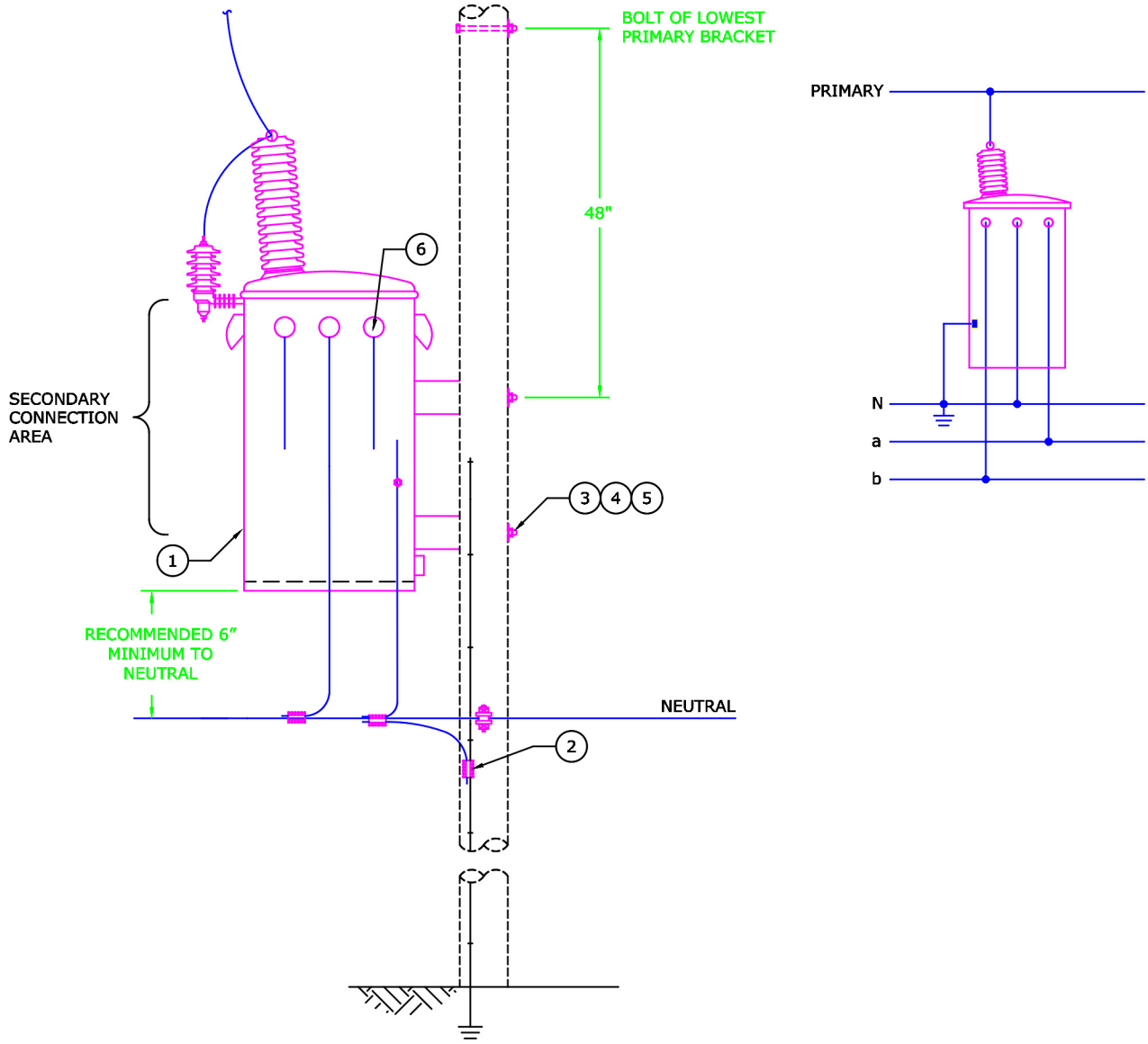

SIDE VIEW

NOTES:

1. BOND TRANSFORMER NEUTRAL AND TRANSFORMER GROUND TO SYSTEM NEUTRAL AND SYSTEM GROUND.
2. CSP TRANSFORMERS MAY BE MOUNTED AT 45° TO THE LINE.
3. PLACE BIRD GUARDS AND USE INSULATED CONDUCTOR ON ALL PRIMARY LEADS.
4. GROUNDS ARE TO STOP AT THE NEUTRAL POSITION EXCEPT TO RISE TO A LIGHTNING ARRESTER OR TRANSFORMER WHEN APPLICABLE.
5. SEE DRAWING MG-11EC FOR CONDUCTOR SIZE.
6. CURRENT LIMITTING FUSES AS REQUIRED. SEE DWG. M5-9CLEC.
7. NO DISCONNECT NEEDED ON A SINGLE PHASE TRANSFORMER.
8. TRANSFORMER SHALL BE INSTALLED SO THAT SECONDARY BUSHINGS ARE ON ROAD SIDE.
9. X2 GROUND WIRE SHALL BE #2 BARE COPPER & TANK GROUNDS SHALL BE #6 BARE COPPER.

DWG REF	QTY	LIST OF MATERIALS DESCRIPTION	STOCK #
1	1	TRANSFORMER, REQUIRED SIZE	–
2	–	CONNECTOR	–
3	2	BOLT, MACHINE	–
4	2	WASHER, SQUARE FLAT, 2 1/4"	–
5	2	WASHER, SQUARE, FLAT	–
6	–	UB-4 OR UB-6 AS NEEDED	–
7	1	CLAMP (NOT SHOWN)	–
8	1	STIRRUP, SIZE AS REQ. (NOT SHOWN)	–

GREENVILLE UTILITIES COMMISSION
GREENVILLE, NORTH CAROLINA

Greenville Utilities

SINGLE-PHASE CSP TRANSFORMER
240/120 VOLT

DWN.	JLS	DATE:	11/29/21
CKD.	KW	APPD.	
SCALE:	NONE		

DATE	REVISION	DATE	REVISION

DWG. NO.

G105EC

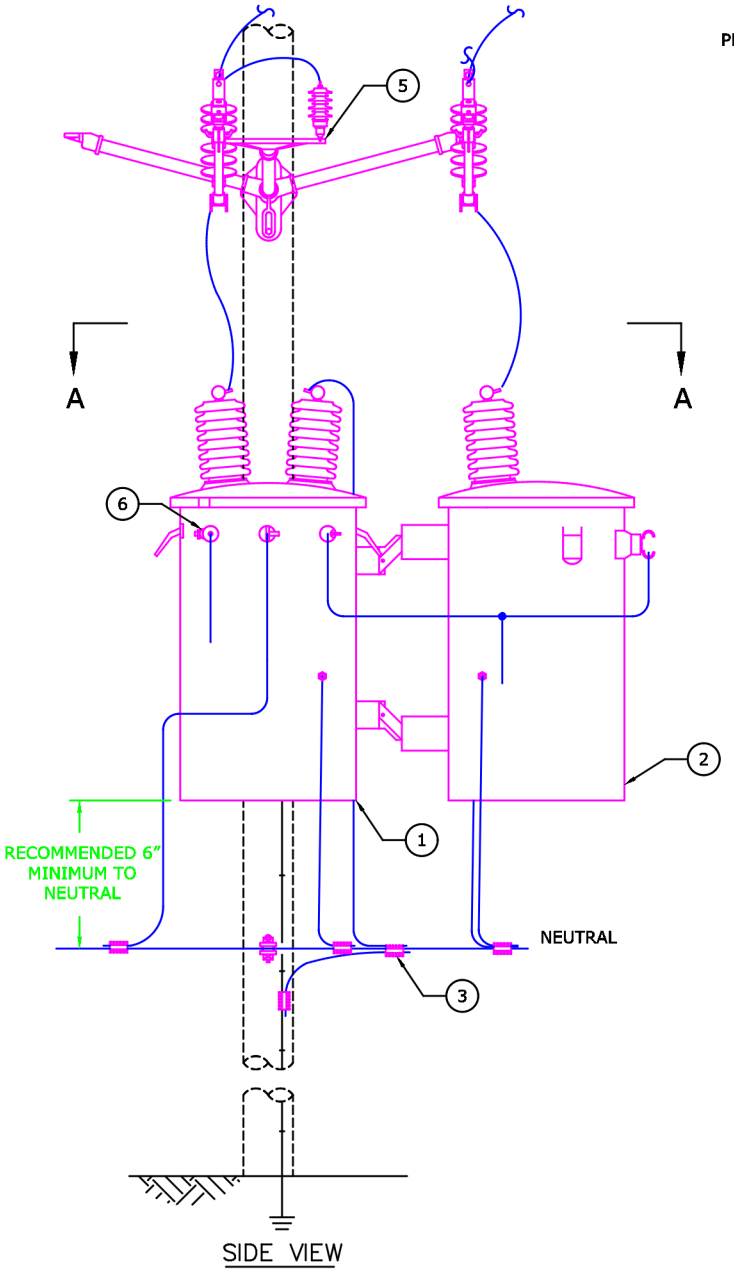

SIDE VIEW

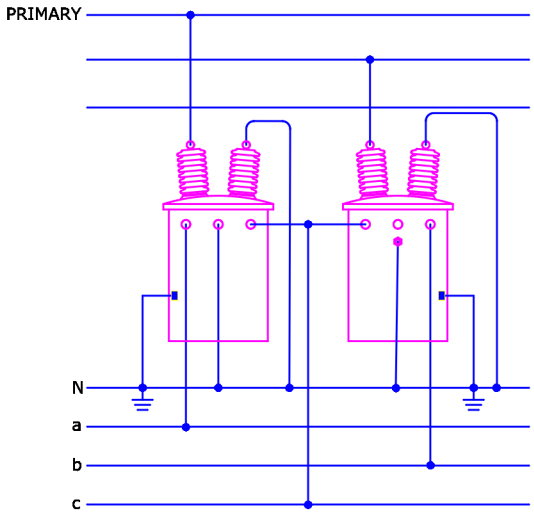

WARNING

DO NOT USE CSP TRANSFORMERS IN THIS CONFIGURATION.

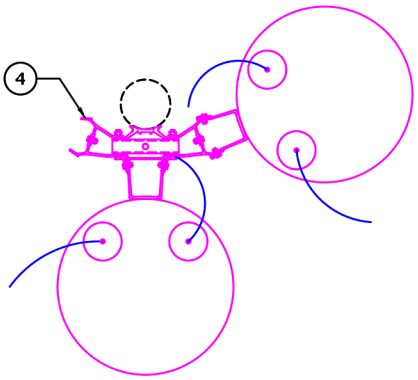

SECTION A–A

NOTES:

1. BOND TRANSFORMER NEUTRAL AND TRANSFORMER GROUND TO SYSTEM NEUTRAL AND SYSTEM GROUND.
2. PLACE BIRD GUARDS AND USE INSULATED CONDUCTOR ON ALL PRIMARY LEADS.
3. GROUNDS ARE TO STOP AT THE NEUTRAL POSITION EXCEPT TO RISE TO A LIGHTNING ARRESTER OR TRANSFORMER WHEN APPLICABLE.
4. SEE DRAWING MG–11EC FOR CONDUCTOR SIZE.
5. CURRENT LIMITTING FUSES AS REQUIRED. SEE DWG. M5–9CLEC.
6. X2 GROUND WIRE SHALL BE #2 BARE COPPER & TANK GROUNDS SHALL BE #6 BARE COPPER.
7. H2 GROUND WIRE SHALL BE #4 INSULATED COPPER.
8. APPARATUS BRACKET AND NEUTRAL HEIGHT MAY VARY DEPENDING ON SIZE OF TRANSFORMER BANK.

DWG REF	QTY	LIST OF MATERIALS DESCRIPTION	STOCK #
1	1	TRANSFORMER, REQUIRED SIZE	–
2	1	TRANSFORMER, REQUIRED SIZE	–
3	–	CONNECTOR	–
4	1	BRACKET, CLUSTER MOUNT	–
5	1	3–PHASE APPARATUS BRACKET	–
6	–	UB–4 OR UB–6 AS NEEDED	–
7	2	CLAMP (NOT SHOWN)	–
8	2	STIRRUP, SIZE AS REQ. (NOT SHOWN)	–

GREENVILLE UTILITIES COMMISSION
GREENVILLE, NORTH CAROLINA

Greenville Utilities

TWO TRANSFORMER, 240/120 VOLT
3–PHASE, 4 WIRE DELTA BANK

DWN.	JLS	DATE:	11/29/21
CKD.	KW	APPD.	
SCALE:	NONE		

DATE	REVISION	DATE	REVISION

DWG. NO.

G210EC

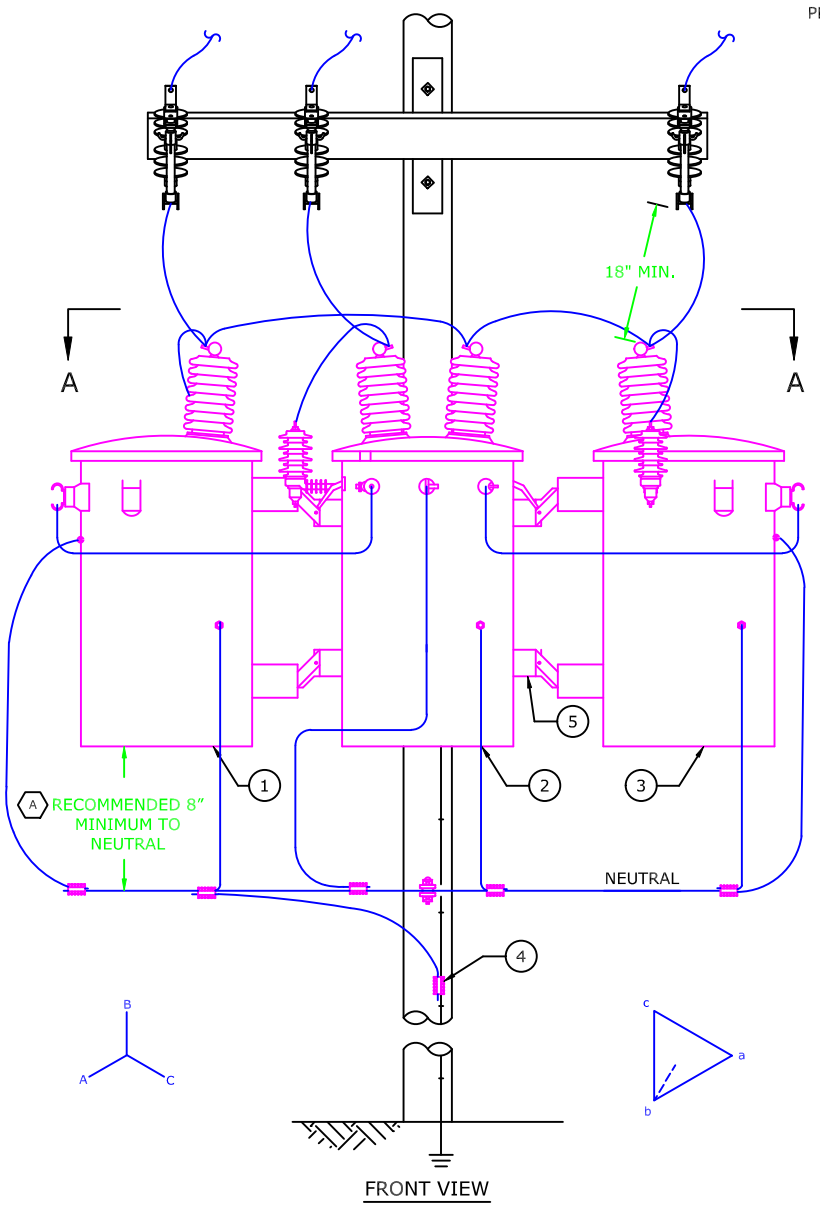

FRONT VIEW

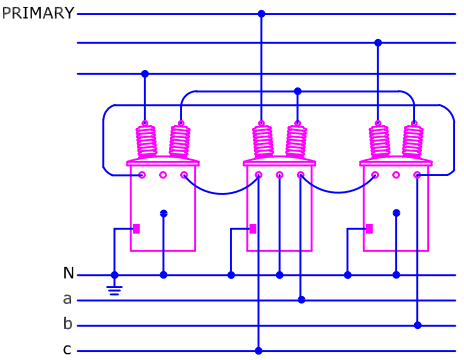

WARNING

DO NOT USE CSP TRANSFORMERS IN THIS CONFIGURATION.

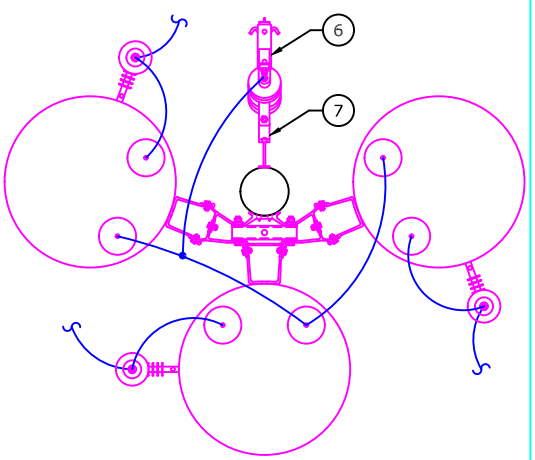

SECTION A-A

NOTES:

1. BOND TRANSFORMER NEUTRAL AND TRANSFORMER GROUND TO SYSTEM NEUTRAL AND SYSTEM GROUND.
2. PLACE BIRD GUARDS AND USE INSULATED CONDUCTOR ON ALL PRIMARY LEADS.
3. MAY USE HARDENED SPIN TOP BUSHINGS IN LIEU OF BIRD GUARDS.
4. GROUNDS ARE TO STOP AT THE NEUTRAL POSITION EXCEPT TO RISE TO A LIGHTNING ARRESTER OR TRANSFORMER WHEN APPLICABLE.
5. TRANS* DENOTES TRANSFORMER KVA SIZE
6. DO NOT PERMANENTLY GROUND HIGH SIDE TRANSFORMER NEUTRAL.
7. INSTALL ADDITIONAL CUTOUT FOR TEMPORARY GROUNDING HIGH SIDE TRANSFORMER NEUTRAL.
8. SEE DWG. MG-11EC FOR CONDUCTOR SIZE.
9. SEE DWG. M2-1EC FOR TRANSFORMER GROUNDING.
10. FUSES AS REQUIRED, SEE DWGS. M5-9EC AND M5-9CLEC.

(A) PLEASE CONSULT NESC IF YOU ARE GOING TO MOUNT THE TRANSFORMER AT A DIFFERENT CLEARANCE.

DWG REF	QTY	LIST OF MATERIALS DESCRIPTION	STOCK #
1	1	TRANSFORMER, REQUIRED SIZE	–
2	1	TRANSFORMER, REQUIRED SIZE	–
3	1	TRANSFORMER, REQUIRED SIZE	–
4	–	CONNECTOR	–
5	1	BRACKET, CLUSTER MOUNT	–
6	1	SWITCH, FUSED CUTOUT	–
7	1	BRACKET, 1PH, CUTOUT/ARRESTER	–
			–
			–

GREENVILLE UTILITIES COMMISSION
GREENVILLE, NORTH CAROLINA

Greenville Utilities

THREE TRANSFORMER, 240/120 VOLT
3–PHASE, 4 WIRE DELTA SECONDARY BANK

DWN.	DRB	DATE:	08/05/2022
CKD.	JLS	APPD.	
SCALE:	NONE		

DATE	REVISION	DATE	REVISION

DWG. NO.

G310EC

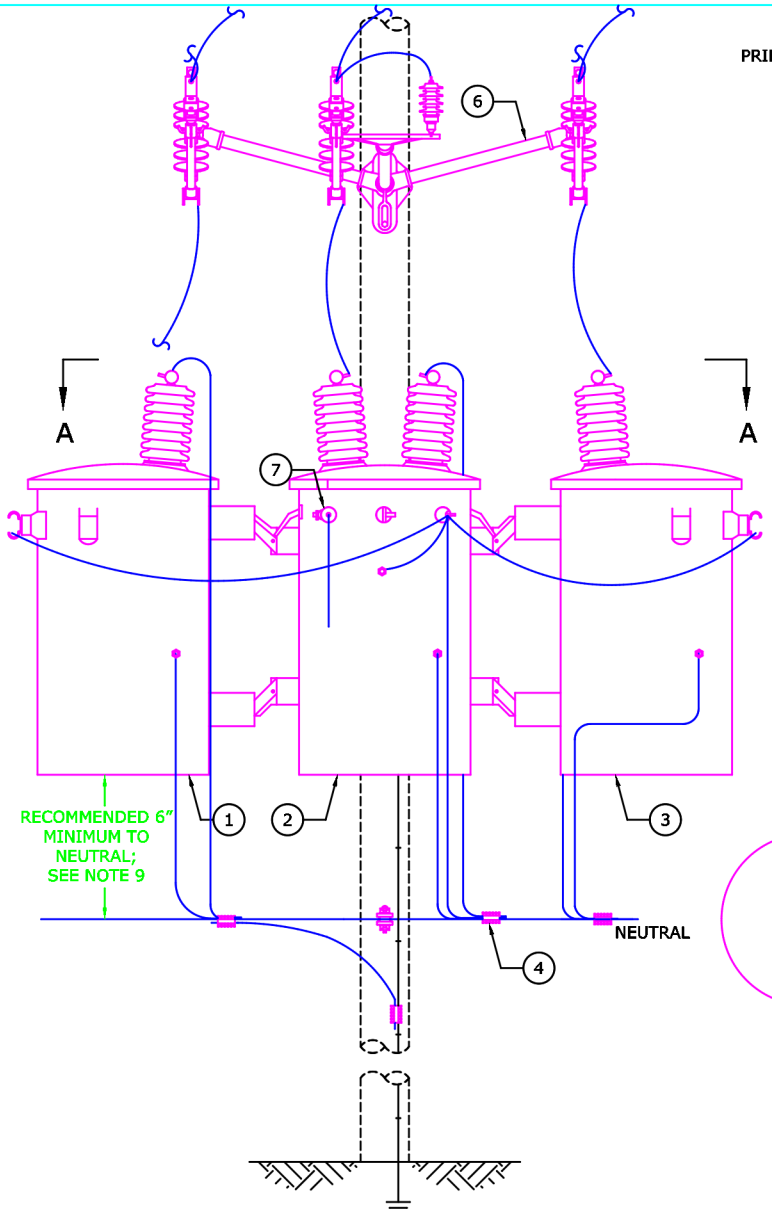

FRONT VIEW

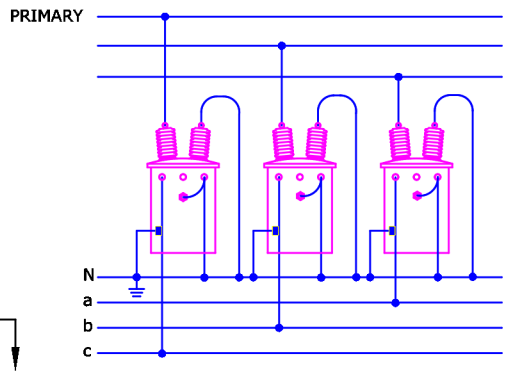

WARNING

DO NOT USE CSP TRANSFORMERS IN THIS CONFIGURATION.

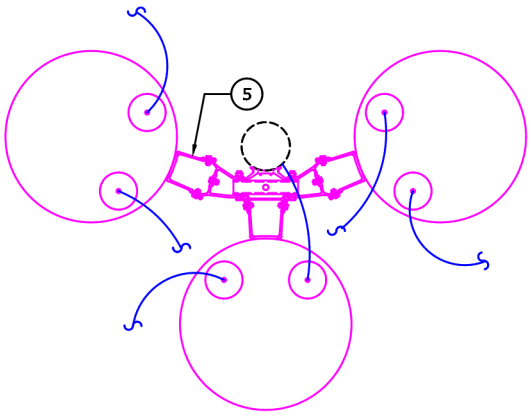

SECTION A–A

NOTES:

1. BOND TRANSFORMER NEUTRAL AND TRANSFORMER GROUND TO SYSTEM NEUTRAL AND SYSTEM GROUND.
2. PLACE BIRD GUARDS AND USE INSULATED CONDUCTOR ON ALL PRIMARY LEADS.
3. GROUNDS ARE TO STOP AT THE NEUTRAL POSITION EXCEPT TO RISE TO A LIGHTNING ARRESTER OR TRANSFORMER WHEN APPLICABLE.
4. SEE DRAWING MG–11EC FOR CONDUCTOR SIZE.
5. CURRENT LIMITTING FUSES AS REQUIRED. SEE DWG. M5–9CLEC.
6. X2 GROUND WIRE SHALL BE #2 BARE COPPER & TANK GROUNDS SHALL BE #6 BARE COPPER.
7. H2 GROUND WIRE SHALL BE #4 INSULATED COPPER.
8. APPARATUS BRACKET AND NEUTRAL HEIGHT MAY VARY DEPENDING ON SIZE OF TRANSFORMER BANK.

DWG REF	QTY	LIST OF MATERIALS DESCRIPTION	STOCK #
1	1	TRANSFORMER, REQUIRED SIZE	–
2	1	TRANSFORMER, REQUIRED SIZE	–
3	1	TRANSFORMER, REQUIRED SIZE	–
4	–	CONNECTOR	–
5	1	BRACKET, CLUSTER MOUNT	–
6	1	3–PHASE APPARATUS BRACKET	–
7	–	UB–4 OR UB–6 AS NEEDED	–
8	3	CLAMP (NOT SHOWN)	–
9	3	STIRRUP, SIZE AS REQ. (NOT SHOWN)	–

GREENVILLE UTILITIES COMMISSION
GREENVILLE, NORTH CAROLINA

Greenville Utilities

THREE TRANSFORMER, 208/120 VOLT 3–PHASE, 4 WIRE WYE BANK

DWN.	JLS	DATE:	11/29/21
CKD.	KW	APPD.	
SCALE:	NONE		

DATE	REVISION	DATE	REVISION

DWG. NO.

G312EC

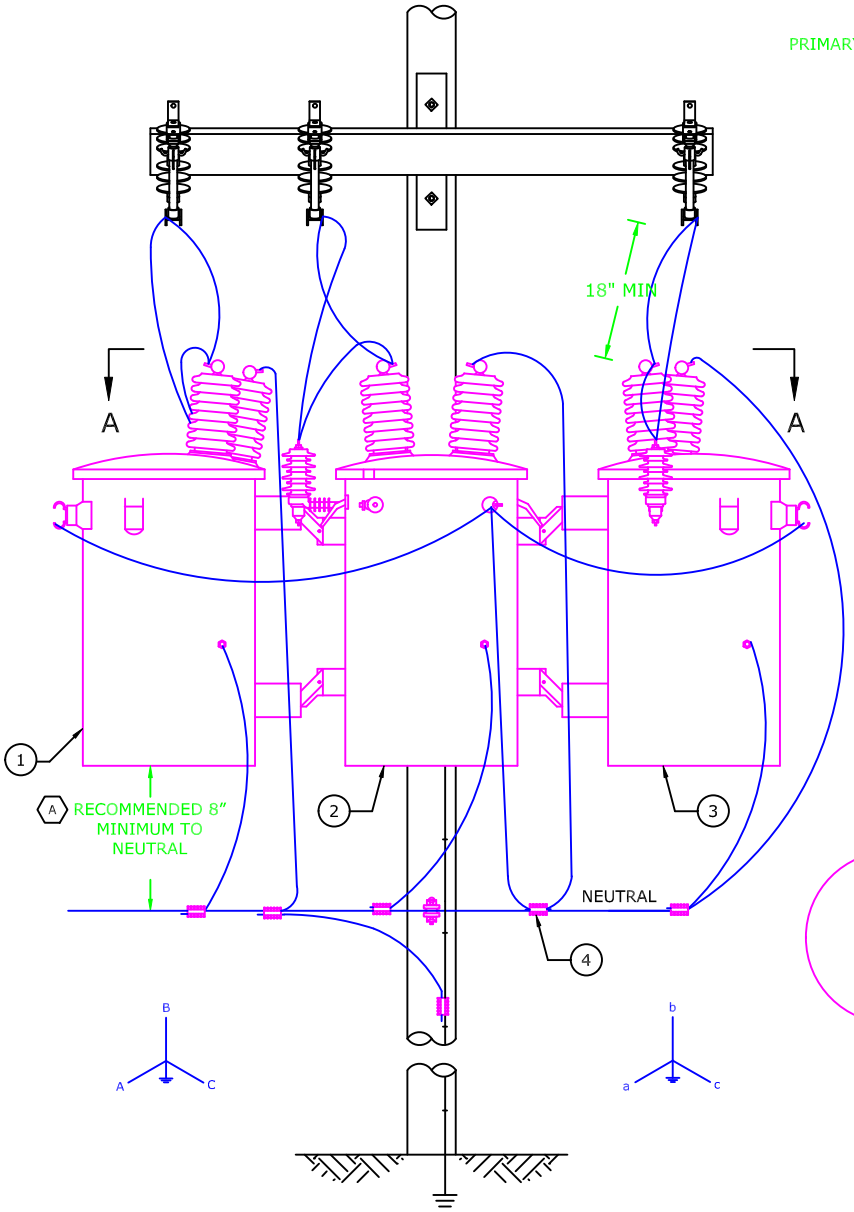

FRONT VIEW

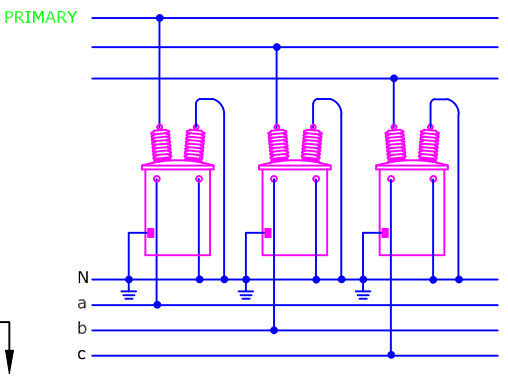

WARNING

DO NOT USE CSP TRANSFORMERS IN THIS CONFIGURATION.

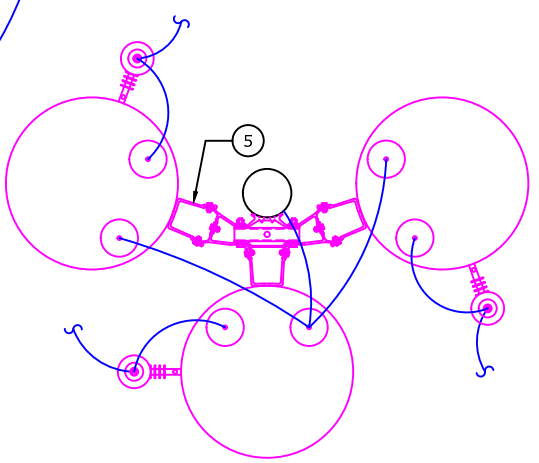

SECTION A-A

NOTES:

1. BOND TRANSFORMER NEUTRAL TO SYSTEM NEUTRAL AND SYSTEM GROUND.
2. PLACE BIRD GUARDS AND USE INSULATED CONDUCTOR ON ALL PRIMARY LEADS.
3. MAY USE HARDENED SPIN TOP BUSHINGS IN LIEU OF BIRD GUARDS.
4. GROUNDS ARE TO STOP AT THE NEUTRAL POSITION EXCEPT TO RISE TO A LIGHTNING ARRESTER OR TRANSFORMER WHEN APPLICABLE.
5. TRANS* DENOTES TRANSFORMER KVA SIZE.
6. SEE DRAWING MG-11EC FOR CONDUCTOR SIZE.
7. SEE DWG. M2-1EC FOR TRANSFORMER GROUNDING.
8. FUSES AS REQUIRED, SEE DWGS. M5-9EC AND M5-9CLEC.

(A) PLEASE CONSULT NESC IF YOU ARE GOING TO MOUNT THE TRANSFORMER AT A DIFFERENT CLEARANCE.

DWG REF	QTY	LIST OF MATERIALS DESCRIPTION	STOCK #
1	1	TRANSFORMER, REQUIRED SIZE	–
2	1	TRANSFORMER, REQUIRED SIZE	–
3	1	TRANSFORMER, REQUIRED SIZE	–
4	–	CONNECTOR	–
5	1	BRACKET, CLUSTER MOUNT	–
			–
			–
			–
			–
			–

GREENVILLE UTILITIES COMMISSION
GREENVILLE, NORTH CAROLINA

Greenville Utilities

THREE TRANSFORMER, 480Y/277 VOLT
3–PHASE, 4 WIRE WYE SECONDARY BANK

DWN.	DRB	DATE:	08/05/2022
CKD.	JLS	APPD.	
SCALE:	NONE		

DATE	REVISION	DATE	REVISION

DWG. NO.

G314EC

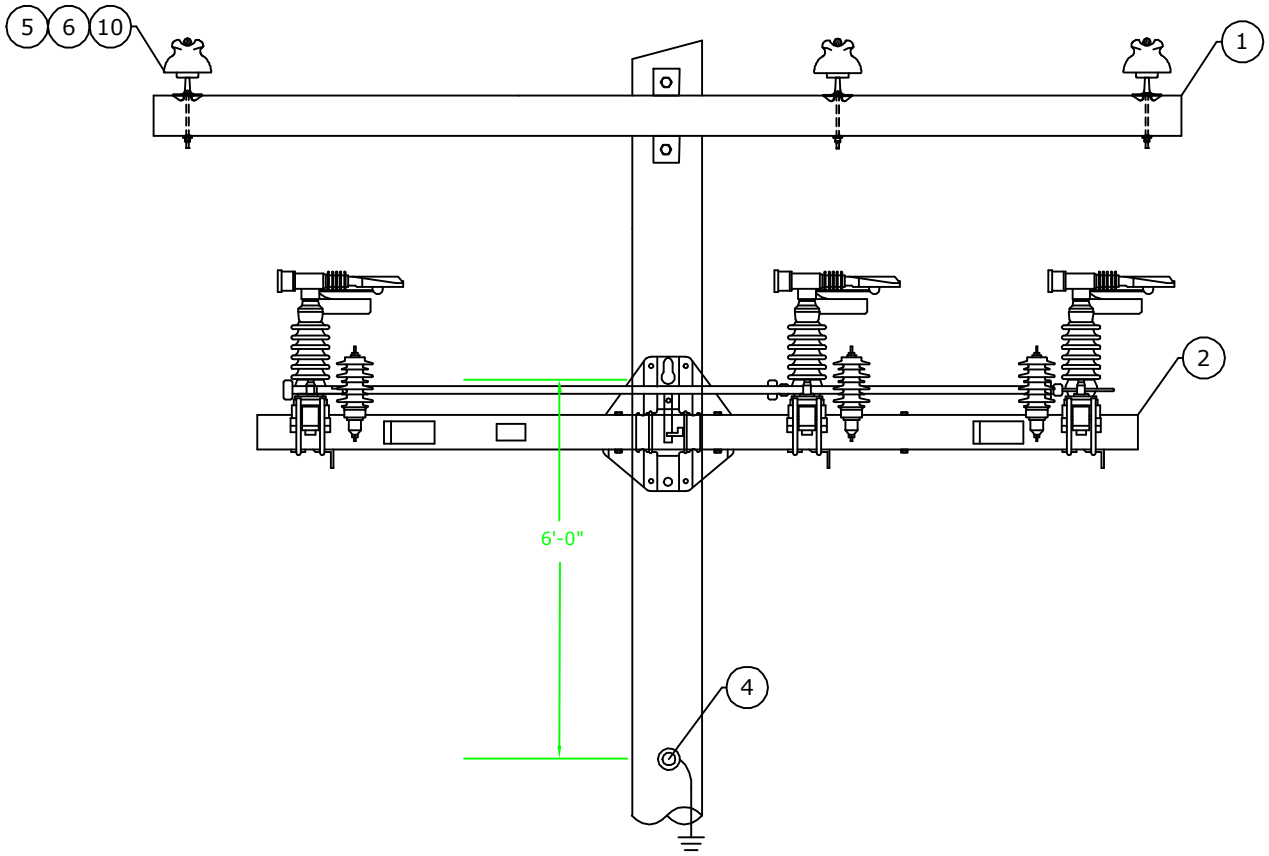

FRONT VIEW

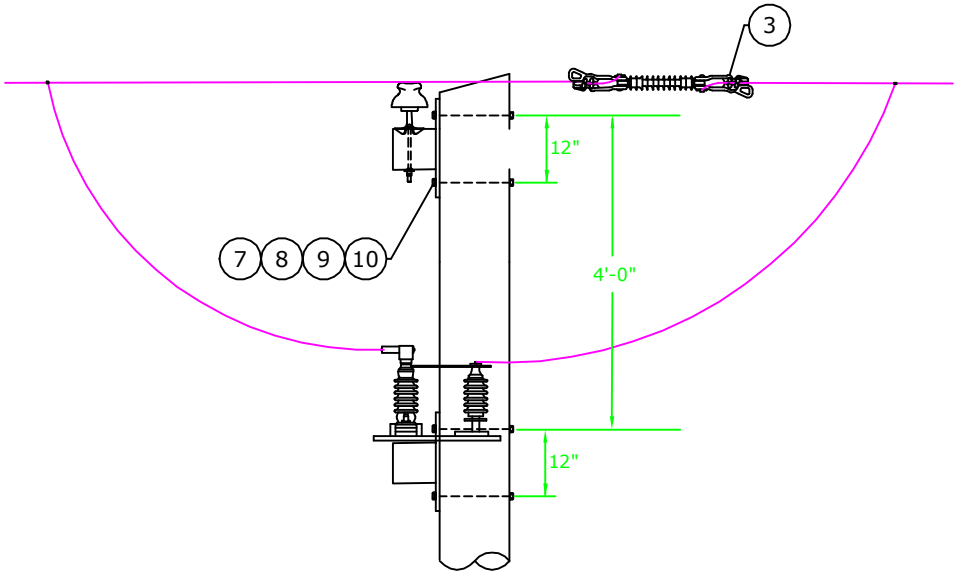

SIDE VIEW

NOTES:

1) FIBERGLASS CROSSARM BRACE NOT SHOWN IN DRAWING.

DWG. REF.	ea.	DESCRIPTION	ITEM	DET.
1	1	10' DISTRIBUTION CROSSARM DE	–	
2	1	15 KV HORIZONTAL GANG SWITCH	–	
3	3	DEAD END ASSEMBLY, SECONDARY	–	
4	1	NEUTRAL ASSEMBLY, DEADEND	–	TM-4E
5	3	25 KV PIN INSULATOR	–	
6	3	25 KV PINS, LONG SHANK CROSS	–	
7	4	BOLT, MACHINE 5/8" x 20"	–	
8	4	SPRING LOCK WASHER, 5/8"	–	
9	4	NUT, 5/8"	–	
10	7	WASHER, SQUARE, 3 x 3 x 1/4" w/ 13/16"	–	

LIST OF MATERIALS

GREENVILLE UTILITIES COMMISSION
GREENVILLE, NORTH CAROLINA

Greenville Utilities

HORIZONTAL GANG SWITCH DETAIL

DWN. JLS		DATE: 11/23/21	
CKD. KW		APPD. KW	
SCALE: N.T.S.		PAGE 1 OF 1	
DATE	REVISION	DATE	REVISION

DWG. NO.

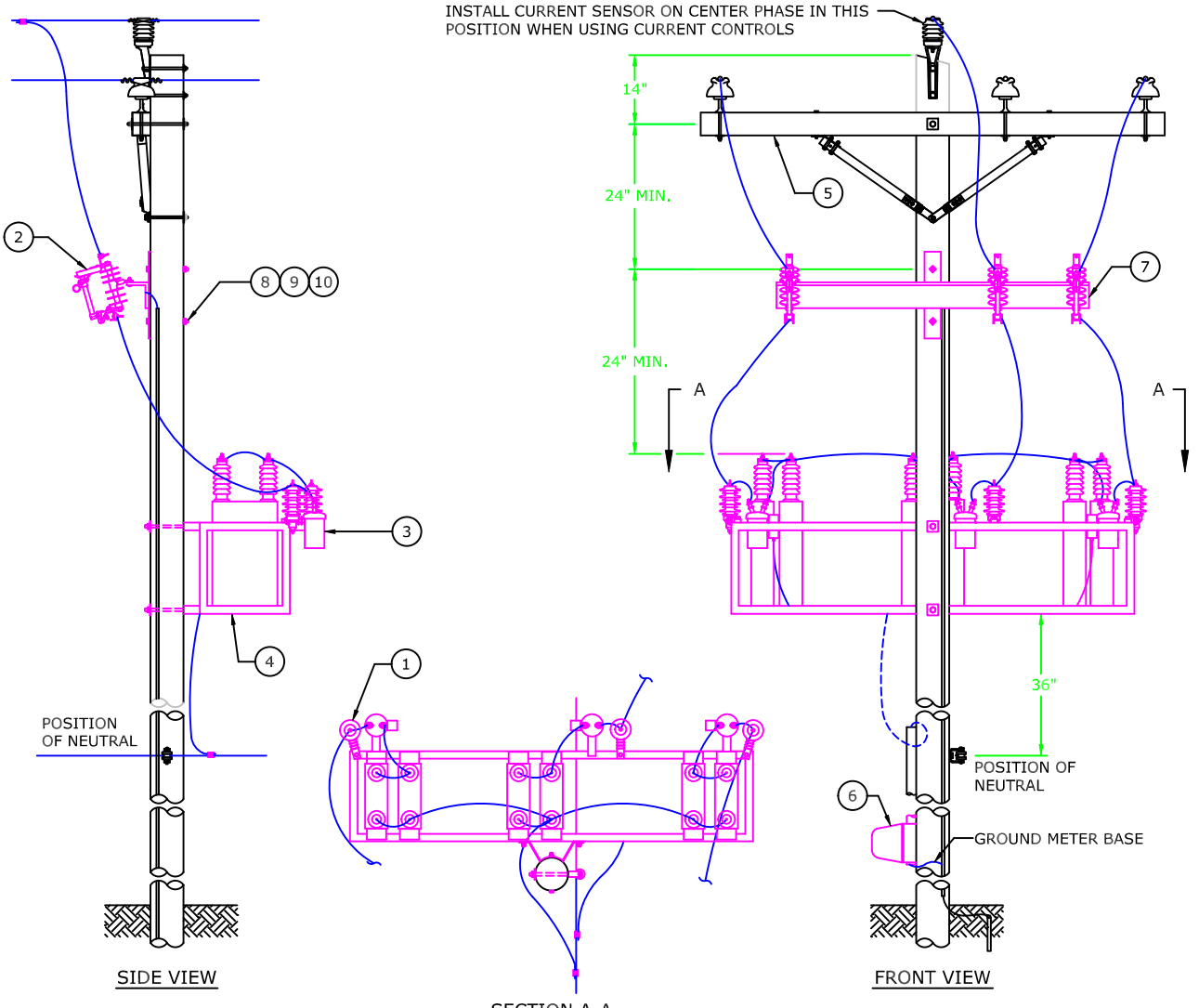

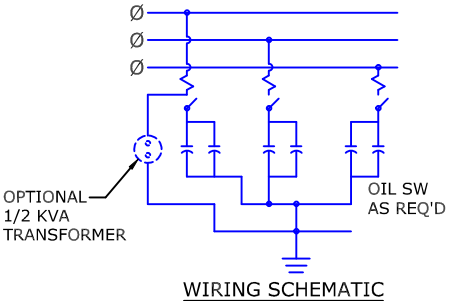

WIRING SCHEMATIC

NOTES:

1. TIE NEUTRAL BUSHINGS OF ALL CAPACITORS IN SERIES TOGETHER AND TIE TO SYSTEM IN SERIES TOGETHER AND TIE TO SYSTEM POLE GROUND.
2. GROUND CAPACITOR RACK TO POLE GROUND IN AT LEAST TWO PLACES.
3. SPECIFY INSULATING CAPS FOR PRIMARY TERMINAL BUSHINGS.
4. CURRENT LIMITING FUSES AS REQUIRED. SEE DWG. M5-9CLEC.
5. PLACE BIRD GUARDS AND USE INSULATED CONDUCTOR ON ALL PRIMARY LEADS.
6. MAY USE HARDENED SPIN TOP BUSHING IN LIEU OF BIRD GUARDS.
7. ALL GROUND WIRE SHALL BE #4 BARE COPPER.
8. SEE DWG. M5-6EC FOR ARRESTER INFORMATION.
9. SEE DWG. M2-1EC FOR GROUND ROD DETAIL.

DWG REF	QTY	LIST OF MATERIALS DESCRIPTION	STOCK #
1	3	ARRESTER, INTERMEDIATE	–
2	1	SWITCH, FUSED CUTOUT	–
3	1	SWITCH, OIL	–
4	–	ASSEMBLY, CAPACITOR BANK	–
5	1	CROSSARM, SYP, WOOD	–
6	1	CONTROLLER, CAPACITOR BANK	–
7	1	BRACKET, 3 PH, CUTOUT/ARRESTER	–
8		BOLT, MACHINE	–
9		WASHER, SQUARE FLAT, 2 1/4"	–
10		WASHER, LOCK 5/8"	–

GREENVILLE UTILITIES COMMISSION
GREENVILLE, NORTH CAROLINA

Greenville Utilities

CAPACITOR ASSEMBLY
THREE–PHASE CROSSARM CONSTRUCTION

DWN.	DRB	DATE:	08/05/2022
CKD.	JLS	APPD.	
SCALE:	NONE		

DATE	REVISION	DATE	REVISION

DWG. NO.

M9-13EC

Appendix D: Greenville Blvd Custom Distribution Drawings

[Balance of Page Left Blank Intentionally]

Sub-Assembly	Description	Manufacturer	Manufacturer P/N	Stock Number	Quantity
Tangent Horz Sgl Ckt (336)	ARMS, 10' H/T FIBERGLASS CROSS	PUPI	TB2500-120-052	203814	1
	INSULATORS, 15kV PIN TYPE	Porcelain Products	263-S	203710	3
	PIN, 18" POLE TOP	Chance	2170P	203430	1
	PREFORMS, 336 WRAP LOCK TIE	Preform	UTC-1110	203600	3
	PINS, LONG SHANK CROSS ARM	Chance	881AP	210311	2

Sub-Assembly	Description	Manufacturer	Manufacturer P/N	Stock Number	Quantity
Dbl Ckt Vertical Tangent (336)	ARMS, 10' H/T FIBERGLASS CROSS	PUPI	TB2500-120-052	203814	3
	INSULATORS, 15kV PIN TYPE	Porcelain Products	263-S	203710	6
	PREFORMS, 336 WRAP LOCK TIE	Preform	UTC-1110	203600	6
	PINS, LONG SHANK CROSS ARM	Chance	881AP	210311	6

Sub-Assembly	Description	Manufacturer	Manufacturer P/N	Stock Number	Quantity
C4 Primary Junction	INSULATORS, POLYMER DEAD-END BELLS	Hubbell/OB	401025-0215	206920	3
	SHOE, 336 DEAD END	Maclean	HDSO-70	202450	4
	CONN., 602009 AMPACT 336-336	TE	602007	202880	4
	BOLTS, 5/8" X 12" EYE	Chance	5512	202290	4
	WASHER, 3 X 3 CURVED	Hubbell	682212	204450	4

Sub-Assembly	Description	Manufacturer	Manufacturer P/N	Stock Number	Quantity
Tangent (336) NEU	INSULATORS, SPOOL "J-151"	Porcelain Products	5101	208290	1
	PERFORMS, 336 WRAP LOCK TIE	Perform	UTC-1110	203600	1

Sub-Assembly	Description	Manufacturer	Manufacturer P/N	Stock Number	Quantity
Fiber Attachment	FIBER, 96 DIELECTRIC DE	Unknown	Unknown	Unknown	2

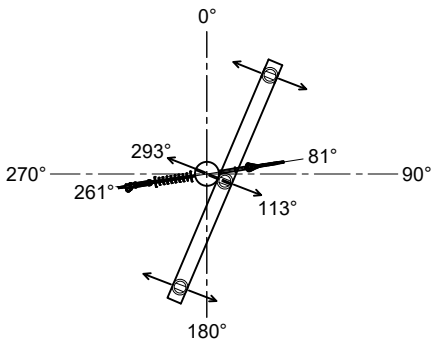

PLAN VIEW

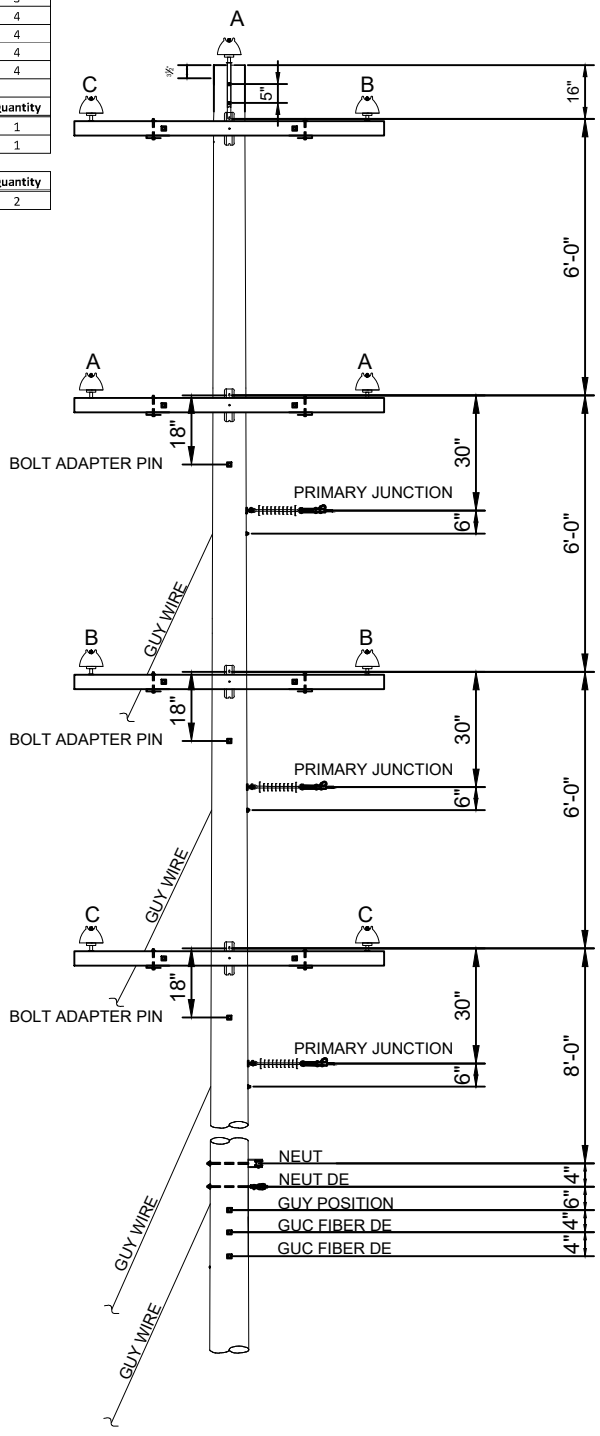

ELEVATION VIEW

NOTICE:
THE DATA IN THIS DOCUMENT INCORPORATES PROPRIETARY RIGHTS OF PIKE ENGINEERING, LLC. ANY PARTY ACCEPTING THIS DOCUMENT DOES SO IN CONFIDENCE AND AGREES THAT IT SHALL NOT BE DUPLICATED IN WHOLE OR PART, NOR DISCLOSED TO OTHERS WITHOUT THE CONSENT OF PIKE ENGINEERING, LLC.

CONTRACTOR SHALL VERIFY ALL CONDITIONS ON JOB SITE & NOTIFY PROJECT MANAGER OF ANY VARIATIONS FROM DIMENSIONS SHOWN ON THESE DRAWINGS BEFORE PROCEEDING WITH ANY CONSTRUCTION.

ISSUED/REVISED FOR:

LVL.	APPR. BY	DATE	DESCRIPTION
A	ADT	06/25/25	ISSUED FOR REVIEW

PROJECT ENGINEER:	K.A.C.
ENGINEER:	F.M.G.
DESIGNER:	F.M.G.
DRAFTER:	F.M.G.
DATE:	06/25/25
SCALE:	NTS
CHECKED BY:	K.A.C.
ELEC. APPROVAL:	N/A
CIVIL APPROVAL:	N/A

PIKE ENGINEERING
PIKE ENGINEERING, LLC.
1800 INNOVATION POINT
SUITE 200
FORT MILL SC, 29715
COA No. COXXXX

PROJECT DESIGNED FOR:
Greenville Utilities

STRUCTURE NAME:
POLE P20.5

DRAWING TITLE:
DISTRIBUTION POLE FRAMING DRAWING P20.5

PROJECT NUMBER
33461-000

DRAWING	SEQ. No.	REV.
SK	03	A

Sub-Assembly	Description	Manufacturer	Manufacturer P/N	Stock Number	Quantity
Sgl Ckt Horz DDE Medium Angle (336)	INSULATORS, POLYMER DEAD-END BELLS	Hubbell/OB	401025-0215	206920	6
	SHOE, 336 DEAD END	Maclean	HDSO-70	202450	6
	ARMS, 8' DEAD-END FIBERGLASS CROSS	PUPI	DA3000-96E2-B72	203813	1
	INSULATORS, 15kV PIN TYPE	Porcelain Products	263-S	203710	3
	PIN, 18" POLE TOP	Chance	2170P	203430	1
	PREFORMS, 336 WRAP LOCK TIE	Preform	UTC-1110	203600	3
	PINS, LONG SHANK CROSS ARM	Chance	881AP	210311	2
	CONN., 602007 AMPACT 336-336	TE	602007	202880	3

Sub-Assembly	Description	Manufacturer	Manufacturer P/N	Stock Number	Quantity
Dbl Ckt Vertical DE Medium Angle (336)	INSULATORS, POLYMER DEAD-END BELLS	Hubbell/OB	401025-0215	206920	12
	SHOE, 336 DEAD END	Maclean	HDSO-70	202450	12
	ARMS, 8' DEAD-END FIBERGLASS CROSS	PUPI	DA3000-96E2-B72	203813	3
	INSULATORS, 15kV PIN TYPE	Porcelain Products	263-S	203710	6
	PREFORMS, 336 WRAP LOCK TIE	Preform	UTC-1110	203600	6
	PINS, LONG SHANK CROSS ARM	Chance	881AP	210311	6
	CONN., 602007 AMPACT 336-336	TE	602007	202880	6

Sub-Assembly	Description	Manufacturer	Manufacturer P/N	Stock Number	Quantity
DE (336) NEU	SHOE, 336 DEAD END	Maclean	HDSO-70	202450	3
	CONN., 602009 AMPACT 336-336	TE	602007	202880	3

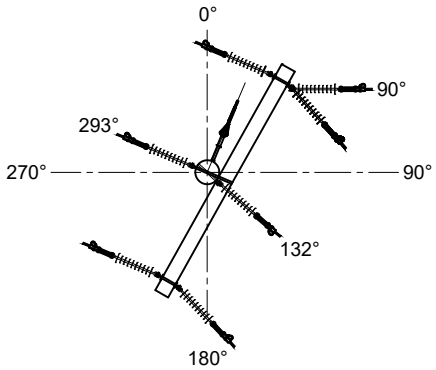

PLAN VIEW

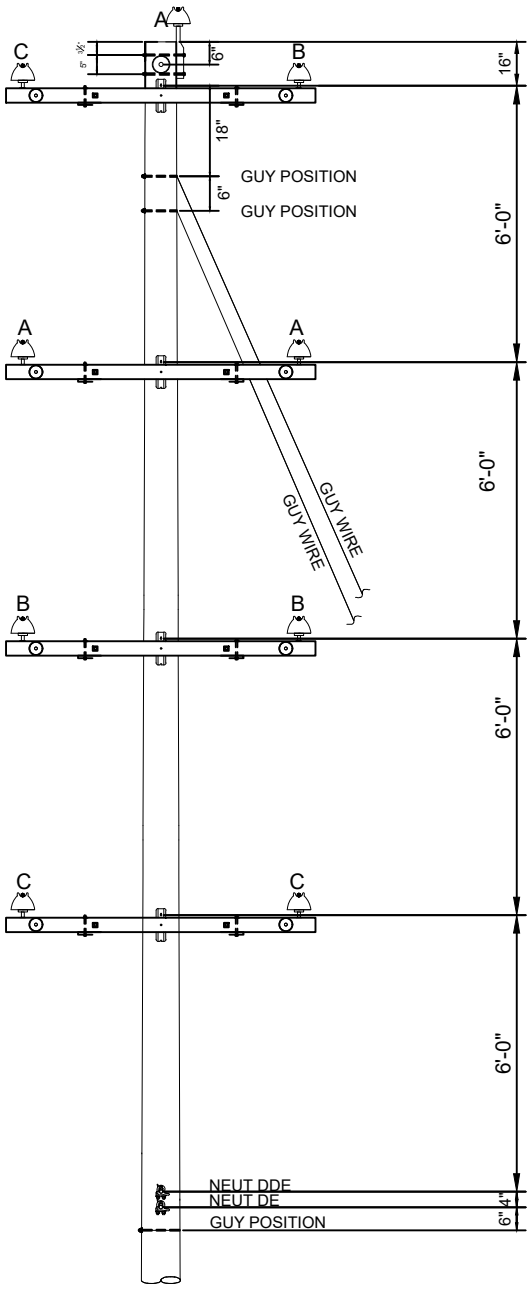

ELEVATION VIEW

NOTICE:
THE DATA IN THIS DOCUMENT INCORPORATES PROPRIETARY RIGHTS OF PIKE ENGINEERING, LLC. ANY PARTY ACCEPTING THIS DOCUMENT DOES SO IN CONFIDENCE AND AGREES THAT IT SHALL NOT BE DUPLICATED IN WHOLE OR PART, NOR DISCLOSED TO OTHERS WITHOUT THE CONSENT OF PIKE ENGINEERING, LLC.

CONTRACTOR SHALL VERIFY ALL CONDITIONS ON JOB SITE & NOTIFY PROJECT MANAGER OF ANY VARIATIONS FROM DIMENSIONS SHOWN ON THESE DRAWINGS BEFORE PROCEEDING WITH ANY CONSTRUCTION.

ISSUED/REVISED FOR:

LVL.	APPR. BY	DATE	DESCRIPTION
A	ADT	06/25/25	ISSUED FOR REVIEW

PROJECT ENGINEER:	K.A.C.
ENGINEER:	F.M.G
DESIGNER:	F.M.G
DRAFTER:	F.M.G
DATE:	06/25/25
SCALE:	NTS
CHECKED BY:	K.A.C.
ELEC. APPROVAL:	N/A
CIVIL APPROVAL:	N/A

PIKE ENGINEERING
PIKE ENGINEERING, LLC.
1800 INNOVATION POINT
SUITE 200
FORT MILL SC 29715
COA No. C0XXXX

PROJECT DESIGNED FOR: Greenville Utilities

STRUCTURE NAME: POLE P20.6

DRAWING TITLE: DISTRIBUTION POLE FRAMING DRAWING P20.6

PROJECT NUMBER: 33461-000

DRAWING: SK 01 | SEQ No. | REV: A

Sub-Assembly	Description	Manufacturer	Manufacturer P/N	Stock Number	Quantity
Sgl Ckt Horz DDE Small Angle (336)	INSULATORS, POLYMER DEAD-END BELLS	Hubbell/OB	401025-0215	206920	6
	SHOE, 336 DEAD END	Maclean	HDSO-70	202450	6
	ARMS, 10' DEAD-END FIBERGLASS CROSS	PUPI	DA3000-120E2-B92	203815	1
	INSULATORS, 15kV PIN TYPE	Porcelain Products	263-S	203710	3
	PIN, 18" POLE TOP	Chance	2170P	203430	1
	PREFORMS, 336 WRAP LOCK TIE	Preform	UTC-1110	203600	3
	PINS, LONG SHANK CROSS ARM	Chance	881AP	210311	2
	CONN., 602007 AMPACT 336-336	TE	602007	202880	3

Sub-Assembly	Description	Manufacturer	Manufacturer P/N	Stock Number	Quantity
Dbl Ckt Vertical DDE Small Angle (336)	INSULATORS, POLYMER DEAD-END BELLS	Hubbell/OB	401025-0215	206920	12
	SHOE, 336 DEAD END	Maclean	HDSO-70	202450	12
	ARMS, 10' DEAD-END FIBERGLASS CROSS	PUPI	DA3000-120E2-B92	203815	3
	INSULATORS, 15kV PIN TYPE	Porcelain Products	263-S	203710	6
	PREFORMS, 336 WRAP LOCK TIE	Preform	UTC-1110	203600	6
	PINS, LONG SHANK CROSS ARM	Chance	881AP	210311	6
	CONN., 602007 AMPACT 336-336	TE	602007	202880	6

Sub-Assembly	Description	Manufacturer	Manufacturer P/N	Stock Number	Quantity
DE (336) NEU	SHOE, 336 DEAD END	Maclean	HDSO-70	202450	2
	CONN., 602009 AMPACT 336-336	TE	602007	202880	1

Sub-Assembly	Description	Manufacturer	Manufacturer P/N	Stock Number	Quantity
Fiber Attachment	FIBER, 96 DDE	Dulmison	FOSC-6065-PB	212040	2

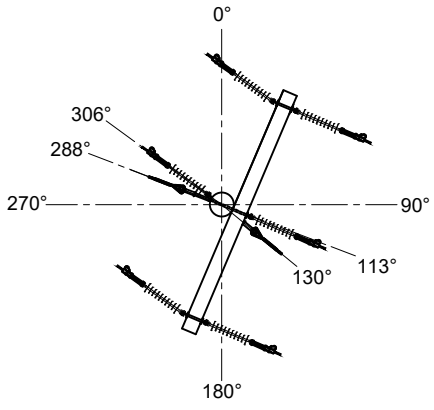

PLAN VIEW

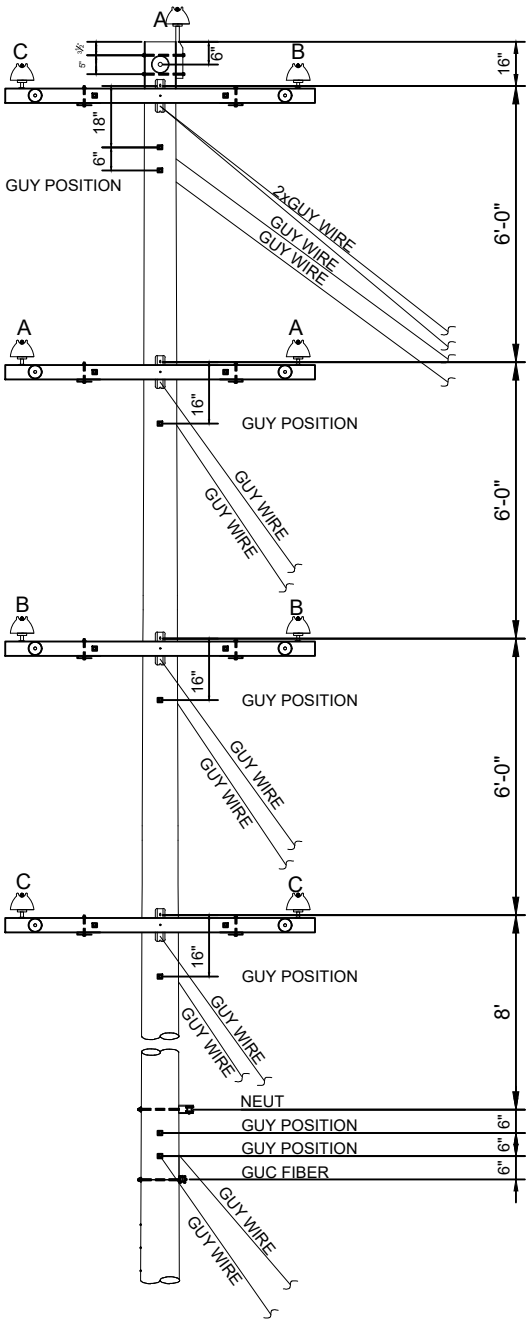

ELEVATION VIEW

NOTICE:
THE DATA IN THIS DOCUMENT INCORPORATES PROPRIETARY RIGHTS OF PIKE ENGINEERING, LLC. ANY PARTY ACCEPTING THIS DOCUMENT DOES SO IN CONFIDENCE AND AGREES THAT IT SHALL NOT BE DUPLICATED IN WHOLE OR PART, NOR DISCLOSED TO OTHERS WITHOUT THE CONSENT OF PIKE ENGINEERING, LLC.

CONTRACTOR SHALL VERIFY ALL CONDITIONS ON JOB SITE & NOTIFY PROJECT MANAGER OF ANY VARIATIONS FROM DIMENSIONS SHOWN ON THESE DRAWINGS BEFORE PROCEEDING WITH ANY CONSTRUCTION.

ISSUED/REVISED FOR:

LVL.	APPR. BY	DATE	DESCRIPTION
A	ADT	06/25/25	ISSUED FOR REVIEW

PROJECT ENGINEER:	K.A.C.
ENGINEER:	F.M.G.
DESIGNER:	F.M.G.
DRAFTER:	F.M.G.
DATE:	06/25/25
SCALE:	NTS
CHECKED BY:	K.A.C.
ELEC. APPROVAL:	N/A
CIVIL APPROVAL:	N/A

PIKE ENGINEERING
PIKE ENGINEERING, LLC.
1800 INNOVATION POINT
SUITE 200
FORT MILL SC. 29715
COA No. C0XXXX

PROJECT DESIGNED FOR: Greenville Utilities

STRUCTURE NAME: POLE 20.12

DRAWING TITLE: DISTRIBUTION POLE FRAMING DRAWING P20.12

PROJECT NUMBER: 33461-000

DRAWING SEQ No.: SK 02 REV.: A

Sub-Assembly	Description	Manufacturer	Manufacturer P/N	Stock Number	Quantity
Tangent Horz Sgl Ckt (336)	ARMS, 10' H/T FIBERGLASS CROSS	PUPI	TB2500-120-052	203814	1
	INSULATORS, 15kV PIN TYPE	Porcelain Products	263-S	203710	3
	PIN, 18" POLE TOP	Chance	2170P	203430	1
	PREFORMS, 336 WRAP LOCK TIE	Preform	UTC-1110	203600	3
	PINS, LONG SHANK CROSS ARM	Chance	881AP	210311	2

Sub-Assembly	Description	Manufacturer	Manufacturer P/N	Stock Number	Quantity
Dbl Ckt Vertical Tangent (336)	ARMS, 10' H/T FIBERGLASS CROSS	PUPI	TB2500-120-052	203814	3
	INSULATORS, 15kV PIN TYPE	Porcelain Products	263-S	203710	6
	PREFORMS, 336 WRAP LOCK TIE	Preform	UTC-1110	203600	6
	PINS, LONG SHANK CROSS ARM	Chance	881AP	210311	6

Sub-Assembly	Description	Manufacturer	Manufacturer P/N	Stock Number	Quantity
Tangent (336) NEU	INSULATORS, SPOOL "J-151"	Porcelain Products	5101	208290	1
	PERFORMS, 336 WRAP LOCK TIE	Perform	UTC-1110	203600	1

Sub-Assembly	Description	Manufacturer	Manufacturer P/N	Stock Number	Quantity
Fiber Attachment	FIBER, 96 TANGENT	Unknown	Unknown	Unknown	1

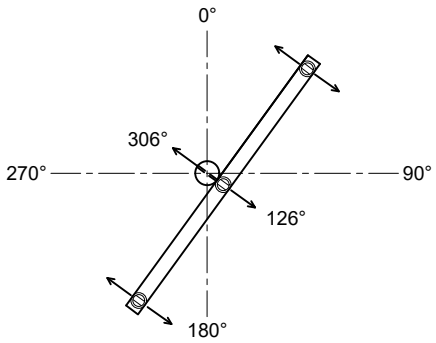

PLAN VIEW

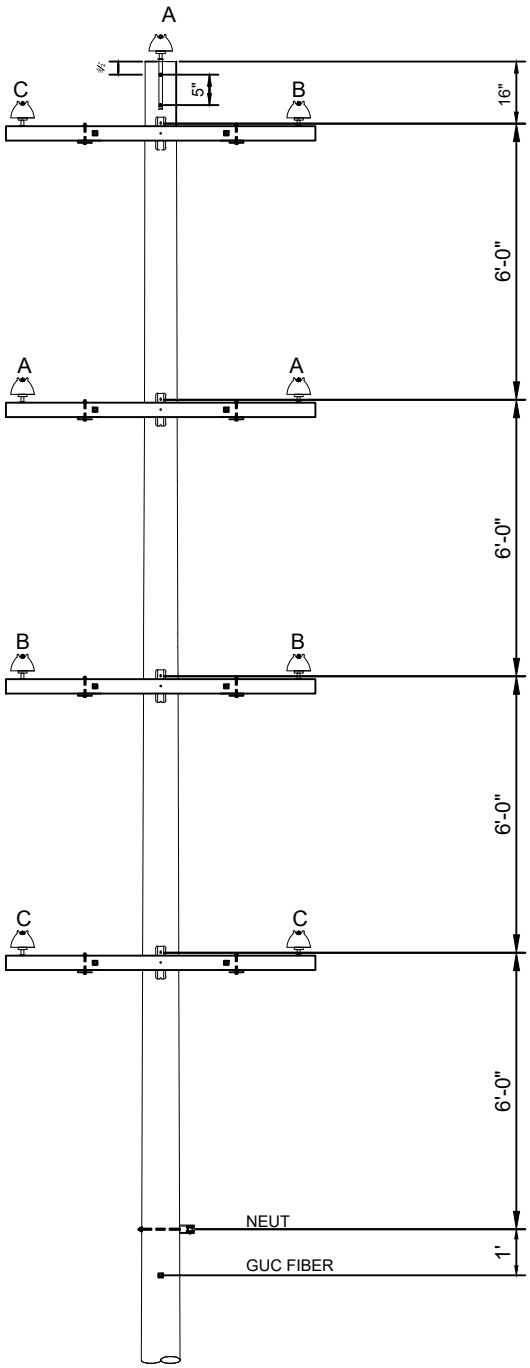

ELEVATION VIEW

NOTICE:
THE DATA IN THIS DOCUMENT INCORPORATES PROPRIETARY RIGHTS OF PIKE ENGINEERING, LLC. ANY PARTY ACCEPTING THIS DOCUMENT DOES SO IN CONFIDENCE AND AGREES THAT IT SHALL NOT BE DUPLICATED IN WHOLE OR PART, NOR DISCLOSED TO OTHERS WITHOUT THE CONSENT OF PIKE ENGINEERING, LLC.

CONTRACTOR SHALL VERIFY ALL CONDITIONS ON JOB SITE & NOTIFY PROJECT MANAGER OF ANY VARIATIONS FROM DIMENSIONS SHOWN ON THESE DRAWINGS BEFORE PROCEEDING WITH ANY CONSTRUCTION.

ISSUED/REVISED FOR:

LVL.	APPR. BY	DATE	DESCRIPTION
A	ADT	06/25/25	ISSUED FOR REVIEW

PROJECT ENGINEER:	K.A.C.
ENGINEER:	F.M.G.
DESIGNER:	F.M.G.
DRAFTER:	F.M.G.
DATE:	06/25/25
SCALE:	NTS
CHECKED BY:	K.A.C.
ELEC. APPROVAL:	N/A
CIVIL APPROVAL:	N/A

PIKE ENGINEERING
PIKE ENGINEERING, LLC.
1800 INNOVATION POINT
SUITE 200
FORT MILL SC 29715
COA No. C0XXXX

PROJECT DESIGNED FOR: Greenville Utilities

STRUCTURE NAME: POLE P20.14

DRAWING TITLE: DISTRIBUTION POLE FRAMING DRAWING P20.14

PROJECT NUMBER: 33461-000

DRAWING SEQ No.: SK 05 REV.: A

Sub-Assembly	Description	Manufacturer	Manufacturer P/N	Stock Number	Quantity
Sgl Ckt Horz Small Angle (336)	ARMS, 10' H/T FIBERGLASS CROSS	PUPI	TB2500-120-052	203814	2
	PIN, ANGLE POLE TOP	Maclean	P-403	206000	2
	INSULATORS, 15kV PIN TYPE	Porcelain Products	263-S	203710	4
	PINS, LONG SHANK CROSS ARM	Chance	881AP	210311	4
	PREFORMS, 336 DBL SUPPORT TIE	Preform	DST-0158	206000	1
	PREFORMS, 336 DBL SIDE TIE	Preform	DBST-1108	203550	2
	BOLTS, 5/8" x REQUIRED LENGTH	TBD	TBD	TBD	2
	WASHER, SQUARE, 4" x 4" x 13/16" HOLE	Chance	6818	220012	6
	SPRING LOCK WASHER, 5/8"	Chance	C2050186	NS	2

Sub-Assembly	Description	Manufacturer	Manufacturer P/N	Stock Number	Quantity
Dbl Ckt Vertical Small Angle (336)	ARMS, 10' H/T FIBERGLASS CROSS	PUPI	TB2500-120-052	203814	6
	INSULATORS, 15kV PIN TYPE	Porcelain Products	263-S	203710	12
	PINS, LONG SHANK CROSS ARM	Chance	881AP	210311	12
	PREFORMS, 336 DBL SIDE TIE	Preform	DBST-1108	203550	6
	BOLTS, 5/8" x REQUIRED LENGTH	TBD	TBD	TBD	6
	WASHER, SQUARE, 4" x 4" x 13/16" HOLE	Chance	6818	220012	18
	SPRING LOCK WASHER, 5/8"	Chance	C2050186	NS	6

Sub-Assembly	Description	Manufacturer	Manufacturer P/N	Stock Number	Quantity
C4 1/0 TAP	INSULATORS, POLYMER DEAD-END BELLS	Hubbell/OB	401025-0215	206920	3
	SHOE, #6-1/0 DEAD END	Maclean	HDSO-47	207570	4
	CONN., 602001 AMPACT 1/0-336	TE	602007	202960	4
	BOLTS, 5/8" X 12" EYE	Chance	5512	202290	4
	WASHER, 3 X 3 CURVED	Hubbell	682212	204450	4

Sub-Assembly	Description	Manufacturer	Manufacturer P/N	Stock Number	Quantity
Small Angle (336) NEU	INSULATORS, SPOOL "J-151"	Porcelain Products	5101	208290	1
	CLEVIS, 1342	MPS	J0342	206000	1
	PREFORMS, 336 WRAP LOCK TIE	Preform	UTC-1110	203600	1

Sub-Assembly	Description	Manufacturer	Manufacturer P/N	Stock Number	Quantity
Fiber Attachment	FIBER, 96 TANGENT	Dulmison	FOSC-6065-PB	212040	1

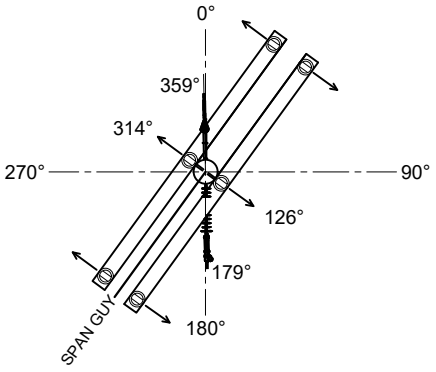

PLAN VIEW

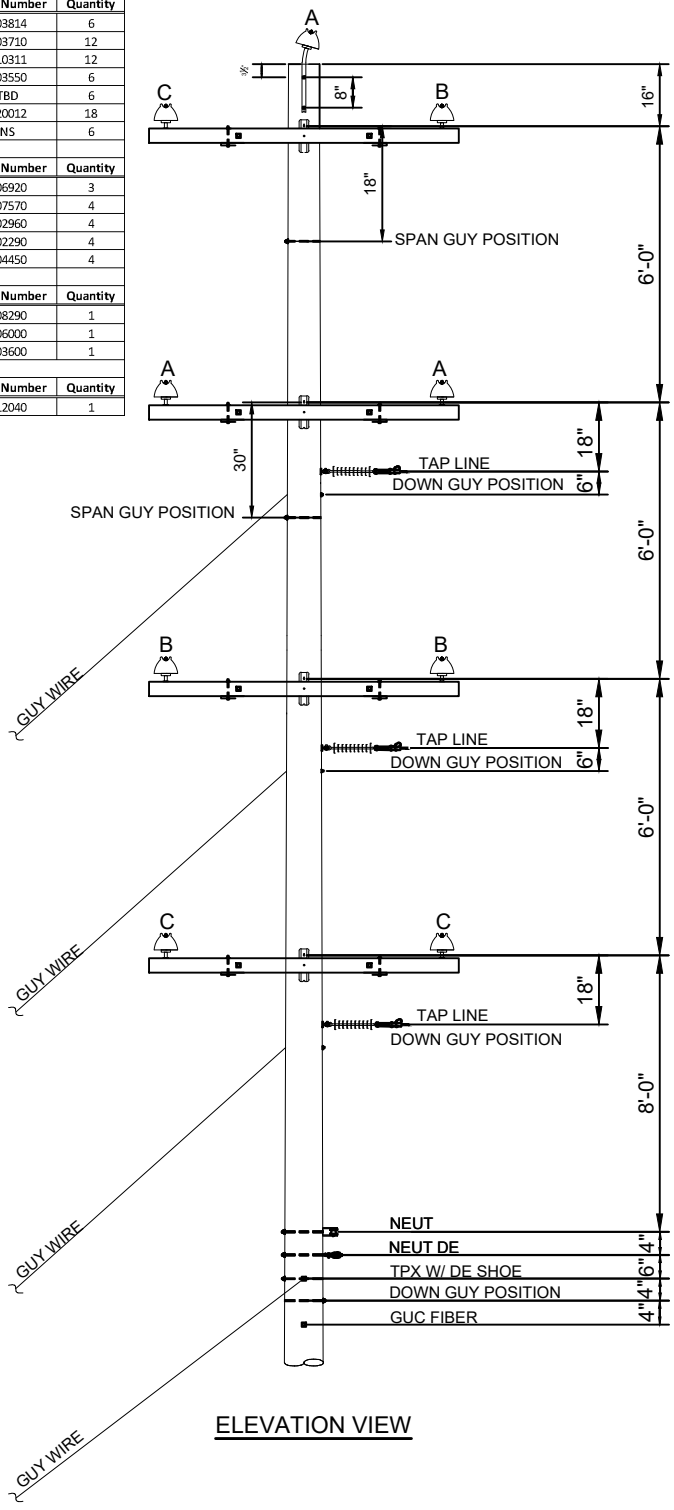

ELEVATION VIEW

NOTICE:
THE DATA IN THIS DOCUMENT INCORPORATES PROPRIETARY RIGHTS OF PIKE ENGINEERING, LLC. ANY PARTY ACCEPTING THIS DOCUMENT DOES SO IN CONFIDENCE AND AGREES THAT IT SHALL NOT BE DUPLICATED IN WHOLE OR PART, NOR DISCLOSED TO OTHERS WITHOUT THE CONSENT OF PIKE ENGINEERING, LLC.

CONTRACTOR SHALL VERIFY ALL CONDITIONS ON JOB SITE & NOTIFY PROJECT MANAGER OF ANY VARIATIONS FROM DIMENSIONS SHOWN ON THESE DRAWINGS BEFORE PROCEEDING WITH ANY CONSTRUCTION.

ISSUED/REVISED FOR:

LVL.	APPR. BY	DATE	DESCRIPTION
A	ADT	06/25/25	ISSUED FOR REVIEW

PROJECT ENGINEER:	K.A.C.
ENGINEER:	F.M.G.
DESIGNER:	F.M.G.
DRAFTER:	F.M.G.
DATE:	06/25/25
SCALE:	NTS
CHECKED BY:	K.A.C.
ELEC. APPROVAL:	N/A
CIVIL APPROVAL:	N/A

PIKE ENGINEERING
PIKE ENGINEERING, LLC.
1800 INNOVATION POINT
SUITE 200
FORT MILL SC, 29715
COA No. C0XXXX

PROJECT DESIGNED FOR: Greenville Utilities

STRUCTURE NAME: POLE P28.3

DRAWING TITLE: DISTRIBUTION POLE FRAMING DRAWING P28.3

PROJECT NUMBER: 33461-000

DRAWING NO.: SK 04 REV.: A

Sub-Assembly	Description	Manufacturer	Manufacturer P/N	Stock Number	Quantity
Sgl Ckt Horz Small Angle (336)	ARMS, 10' H/T FIBERGLASS CROSS	PUPI	TB2500-120-052	203814	2
	PIN, ANGLE POLE TOP	Maclean	P-403	206000	2
	INSULATORS, 15kV PIN TYPE	Porcelain Products	263-S	203710	4
	PINS, LONG SHANK CROSS ARM	Chance	881AP	210311	4
	PREFORMS, 336 DBL SUPPORT TIE	Preform	DST-0158	206000	1
	PREFORMS, 336 DBL SIDE TIE	Preform	DBST-1108	203550	2
	BOLTS, 5/8" x REQUIRED LENGTH	TBD	TBD	TBD	2
	WASHER, SQUARE, 4" x 4" x 13/16" HOLE	Chance	6818	220012	6
	SPRING LOCK WASHER, 5/8"	Chance	C2050186	NS	2

Sub-Assembly	Description	Manufacturer	Manufacturer P/N	Stock Number	Quantity
Dbl Ckt Vertical Small Angle (336)	ARMS, 10' H/T FIBERGLASS CROSS	PUPI	TB2500-120-052	203814	6
	INSULATORS, 15kV PIN TYPE	Porcelain Products	263-S	203710	12
	PINS, LONG SHANK CROSS ARM	Chance	881AP	210311	12
	PREFORMS, 336 DBL SIDE TIE	Preform	DBST-1108	203550	6
	BOLTS, 5/8" x REQUIRED LENGTH	TBD	TBD	TBD	6
	WASHER, SQUARE, 4" x 4" x 13/16" HOLE	Chance	6818	220012	18
	SPRING LOCK WASHER, 5/8"	Chance	C2050186	NS	6

Sub-Assembly	Description	Manufacturer	Manufacturer P/N	Stock Number	Quantity
C4 1/0 TAP	INSULATORS, POLYMER DEAD-END BELLS	Hubbell/OB	401025-0215	206920	3
	SHOE, #6-1/0 DEAD END	Maclean	HDSO-47	207570	4
	CONN., 602001 AMPACT 1/0-336	TE	602007	202960	4
	BOLTS, 5/8" X 12" EYE	Chance	5512	202290	4
	WASHER, 3 X 3 CURVED	Hubbell	682212	204450	4

Sub-Assembly	Description	Manufacturer	Manufacturer P/N	Stock Number	Quantity
Small Angle (336) NEU	INSULATORS, SPOOL "J-151"	Porcelain Products	5101	208290	3
	CLEVIS, 1342	MPS	J0342	206000	3
	PREFORMS, 336 WRAP LOCK TIE	Preform	UTC-1110	203600	3

Sub-Assembly	Description	Manufacturer	Manufacturer P/N	Stock Number	Quantity
Fiber Attachment	FIBER, 96 TANGENT	Dulmison	FOSC-6065-PB	212040	1

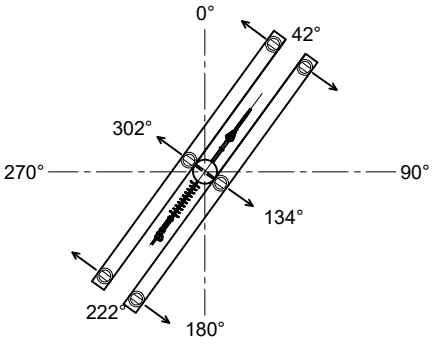

PLAN VIEW

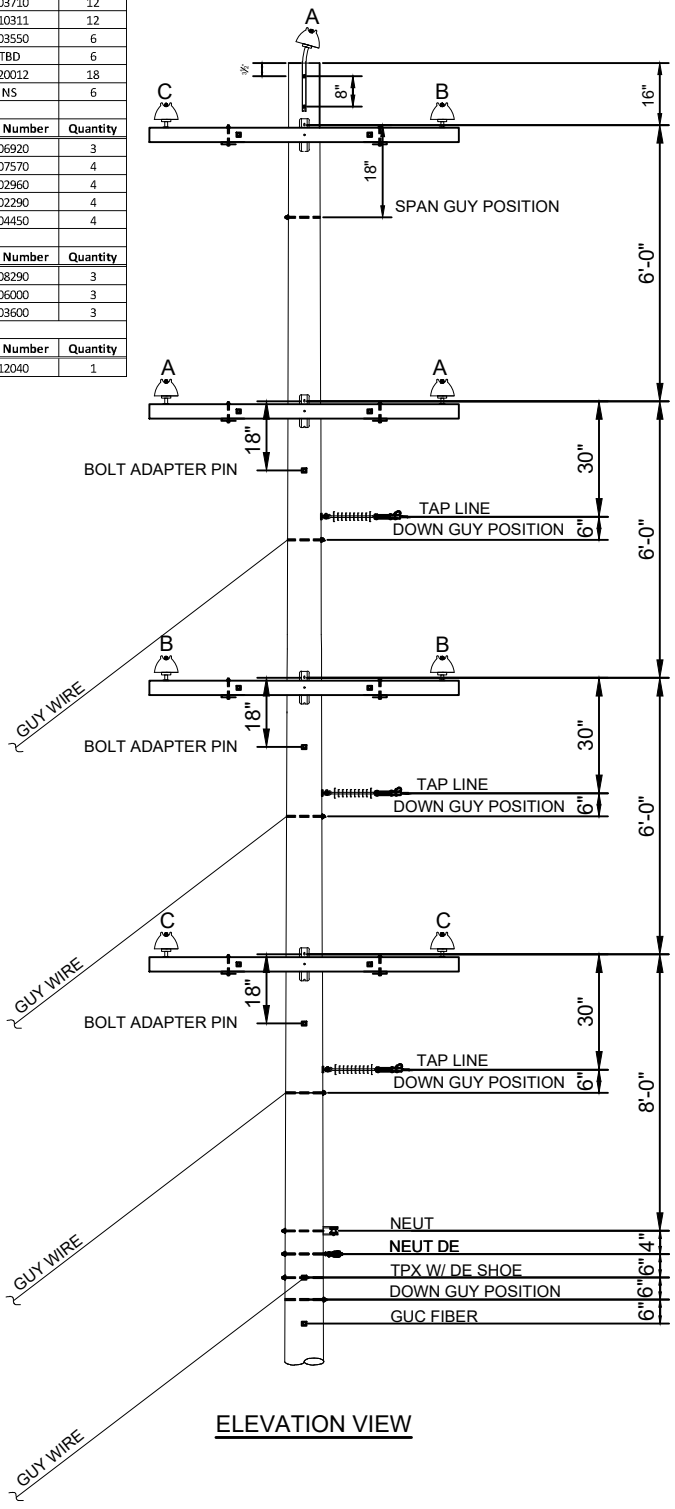

ELEVATION VIEW

NOTICE:
THE DATA IN THIS DOCUMENT INCORPORATES PROPRIETARY RIGHTS OF PIKE ENGINEERING, LLC. ANY PARTY ACCEPTING THIS DOCUMENT DOES SO IN CONFIDENCE AND AGREES THAT IT SHALL NOT BE DUPLICATED IN WHOLE OR PART, NOR DISCLOSED TO OTHERS WITHOUT THE CONSENT OF PIKE ENGINEERING, LLC.

CONTRACTOR SHALL VERIFY ALL CONDITIONS ON JOB SITE & NOTIFY PROJECT MANAGER OF ANY VARIATIONS FROM DIMENSIONS SHOWN ON THESE DRAWINGS BEFORE PROCEEDING WITH ANY CONSTRUCTION.

ISSUED/REVISED FOR:

LVL.	APPR. BY	DATE	DESCRIPTION
A	ADT	06/25/25	ISSUED FOR REVIEW

PROJECT ENGINEER:	K.A.C.
ENGINEER:	F.M.G.
DESIGNER:	F.M.G.
DRAFTER:	F.M.G.
DATE:	06/25/25
SCALE:	NTS
CHECKED BY:	K.A.C.
ELEC. APPROVAL:	N/A
CIVIL APPROVAL:	N/A

PIKE ENGINEERING
PIKE ENGINEERING, LLC.
1800 INNOVATION POINT
SUITE 200
FORT MILL SC, 29715
COA No. COXXXX

PROJECT DESIGNED FOR: Greenville Utilities

STRUCTURE NAME: POLE P28.6

DRAWING TITLE: DISTRIBUTION POLE FRAMING DRAWING P28.6

PROJECT NUMBER: 33461-000

DRAWING: SK | SEQ No.: 06 | REV.: A

Sub-Assembly	Description	Manufacturer	Manufacturer P/N	Stock Number	Quantity
Sgl Ckt Horz DDE Small Angle (336)	INSULATORS, POLYMER DEAD-END BELLS	Hubbell/OB	401025-0215	206920	6
	SHOE, 336 DEAD END	Maclean	HDSO-70	202450	6
	EXTENSIONS, 14" LINKS	MPS	J6658	210340	4
	ARMS, 10' DEAD-END FIBERGLASS CROSS	PUPI	DA3000-120E2-B92	203815	1
	INSULATORS, 15kV PIN TYPE	Porcelain Products	263-S	203710	3
	PIN, 18" POLE TOP	Chance	2170P	203430	1
	PREFORMS, 336 WRAP LOCK TIE	Preform	UTC-1110	203600	3
	PINS, LONG SHANK CROSS ARM	Chance	881AP	210311	2
	CONN., 602007 AMPACT 336-336	TE	602007	202880	3

Sub-Assembly	Description	Manufacturer	Manufacturer P/N	Stock Number	Quantity
Dbl Ckt Vertical DDE Small Angle (336)	INSULATORS, POLYMER DEAD-END BELLS	Hubbell/OB	401025-0215	206920	12
	SHOE, 336 DEAD END	Maclean	HDSO-70	202450	12
	EXTENSIONS, 14" LINKS	MPS	J6658	210340	12
	ARMS, 10' DEAD-END FIBERGLASS CROSS	PUPI	DA3000-120E2-B92	203815	3
	INSULATORS, 15kV PIN TYPE	Porcelain Products	263-S	203710	6
	PREFORMS, 336 WRAP LOCK TIE	Preform	UTC-1110	203600	6
	PINS, LONG SHANK CROSS ARM	Chance	881AP	210311	6
	CONN., 602007 AMPACT 336-336	TE	602007	202880	6

Sub-Assembly	Description	Manufacturer	Manufacturer P/N	Stock Number	Quantity
DE (336) NEU	SHOE, 336 DEAD-END	Maclean	HDSO-70	202450	2
	CONN., 602007 AMPACT 336-336	TE	602007	202880	1

Sub-Assembly	Description	Manufacturer	Manufacturer P/N	Stock Number	Quantity
Fiber Attachment	FIBER, 96 DIELECTRIC DDE	Unknown	Unkown	Unknown	2

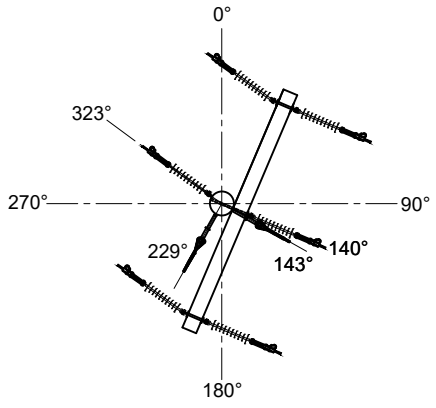

PLAN VIEW

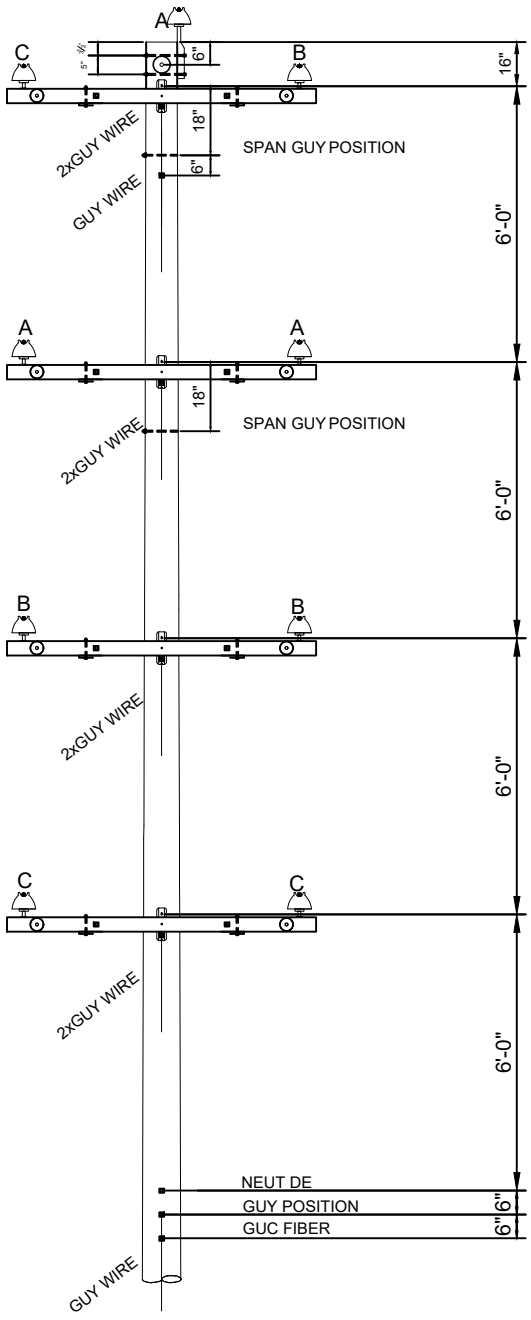

ELEVATION VIEW

NOTICE:
THE DATA IN THIS DOCUMENT INCORPORATES PROPRIETARY RIGHTS OF PIKE ENGINEERING, LLC. ANY PARTY ACCEPTING THIS DOCUMENT DOES SO IN CONFIDENCE AND AGREES THAT IT SHALL NOT BE DUPLICATED IN WHOLE OR PART, NOR DISCLOSED TO OTHERS WITHOUT THE CONSENT OF PIKE ENGINEERING, LLC.

CONTRACTOR SHALL VERIFY ALL CONDITIONS ON JOB SITE & NOTIFY PROJECT MANAGER OF ANY VARIATIONS FROM DIMENSIONS SHOWN ON THESE DRAWINGS BEFORE PROCEEDING WITH ANY CONSTRUCTION.

ISSUED/REVISED FOR:

LVL.	APPR. BY	DATE	DESCRIPTION
A	ADT	06/25/25	ISSUED FOR REVIEW

PROJECT ENGINEER:	K.A.C.
ENGINEER:	F.M.G.
DESIGNER:	F.M.G.
DRAFTER:	F.M.G.
DATE:	06/25/25
SCALE:	NTS
CHECKED BY:	K.A.C.
ELEC. APPROVAL:	N/A
CIVIL APPROVAL:	N/A

PIKE ENGINEERING
PIKE ENGINEERING, LLC
1800 INNOVATION POINT
SUITE 200
FORT MILL SC, 29715
COA No. C0XXXX

PROJECT DESIGNED FOR: Greenville Utilities

STRUCTURE NAME: POLE P216

DRAWING TITLE: DISTRIBUTION POLE FRAMING DRAWING P216

PROJECT NUMBER: 33461-000

DRAWING	SEV. No.	REV.
SK 07		A

Appendix E: Transmission Construction Drawings

[Balance of Page Left Blank Intentionally]

Appendix F: Transmission Pole Vendor Drawings

[Balance of Page Left Blank Intentionally]

700 E. McLEROY BLVD
SAGINAW, TEXAS 76179
682.286.0046 PH
682.286.0086 FX
CHMINDUSTRIES.COM

PHASE: SUBMITTAL

JOB #: 12899

CUSTOMER: GREENVILLE UTILITIES STEEL STRUCTURES- NC

FINISH: GALVANIZED

STRUCTURE DETAILS

SEE GENERAL NOTES AND DETAILS SHEET FOR SUPPLEMENTARY INFORMATION

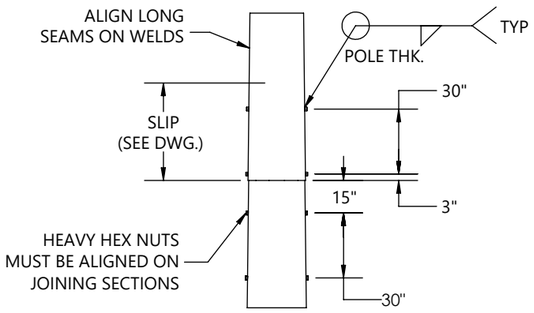

JACKING NUTS DETAIL

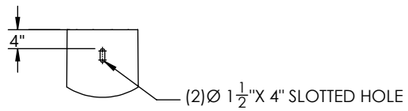

GALVANIZING LIFTING SLOT

HOLES LOCATED AT BOTTOM OF TOP SHAFT, TOP OF BOTTOM SHAFT, AND BOTH TOP AND BOTTOM OF MID SHAFT.

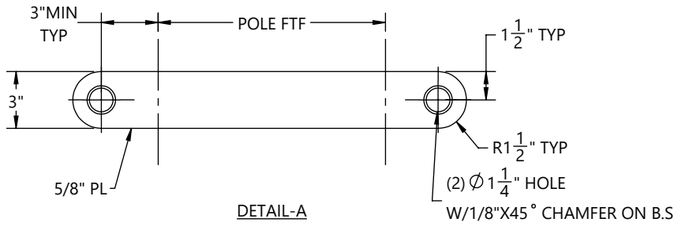

DETAIL-A

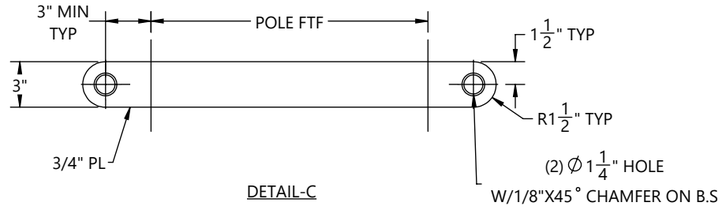

DETAIL-C

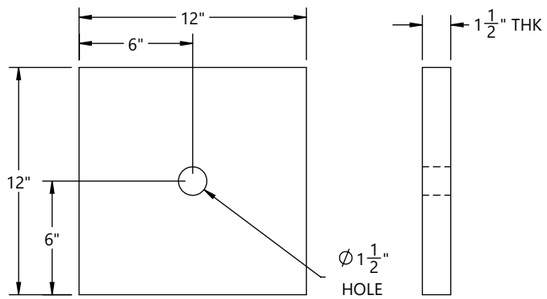

DETAIL-B

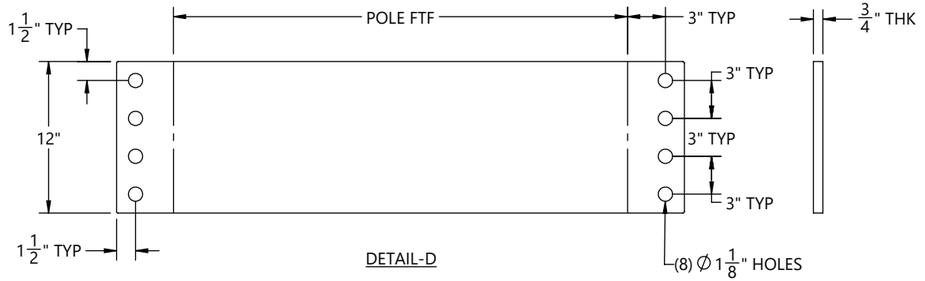

DETAIL-D

GENERAL NOTES:

1. SHAFTS MEASURED FLAT-TO-FLAT.
2. WELDING CODE: AWS D1.1
3. ALL FULL PENETRATION WELDS TO BE UT INSPECTED

AS APPLICABLE:

GALVANIZED NOTES:

1. HOT DIPPED GALVANIZED PER ASTM A123
2. IF REQUIRED, REPAIR PER ASTM A780

PROTECTIVE COATING:

1. TYPE: TARGUARD
2. THICKNESS: 16 MILS
3. INCLUDING BEARING PLATE.

DO NOT COAT GROUNDING FEATURES

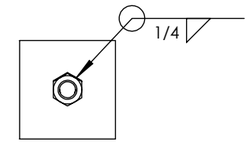

GALVANIZED GROUNDING NUT DETAIL

REV.	ECR #	DESCRIPTION	APPROVED BY	DATE
1		SUBMITTAL FOR APPROVAL	EV	07/17/2026

REVISIONS

BY		DATE
DRAWN:	KR	07/17/2026
CHK'D:	EV	07/17/2026

CHM INDUSTRIES
700 E. McLEROY BLVD
SAGINAW, TEXAS 76179
682.286.0046 PH
682.286.0086 FX
CHMINDUSTRIES.COM

(SEE CHM IND., INC. PROCEDURE CHM-PR-1.7.3-F1 FOR STANDARD TOLERANCES)

QTY: N/A | GLM: (FT-K) - | JOB NO. 12899 | PART NO. - | DWG NO. 12899-GND

CUST NAME: GREENVILLE UTILITIES STEEL STRUCTURES- NC

STR #: TYPE/CLASS-HEIGHT:

DESCRIPTION: GENERAL NOTE DETAILS

SCALE: NTS DO NOT SCALE DRAWING

REV. 1 | SHEET: 5 of 10

THIS DWG IS PROPERTY OF CHM INDUSTRIES AND CONTAINS PROPRIETARY INFORMATION WHICH MAY NOT BE COPIED OR REPRODUCED WITHOUT PRIOR WRITTEN CONSENT FROM CHM INDUSTRIES.

FINISH:	BLACK WEIGHT	GALVANIZED WEIGHT
GALVANIZED	9881 LBS	10474 LBS
WEIGHTS ABOVE INCLUDE ALL BOM ITEMS		

SEE GENERAL NOTES AND DETAILS SHEET FOR SUPPLEMENTARY INFORMATION

ITEM #	PART #	DESCRIPTION	QTY.
1	12899-00100-BOT	BOTTOM SECTION, 32.05" X 30.14" X 5/16" X 8'-6"	1
2	12899-00100-MID	MIDDLE SECTION, 31.90" X 25.60" X 5/16" X 28'-0"	1
3	12899-00100-TOP	TOP SECTION, 27.12" X 17.00" X 1/4" X 45'-0"	1

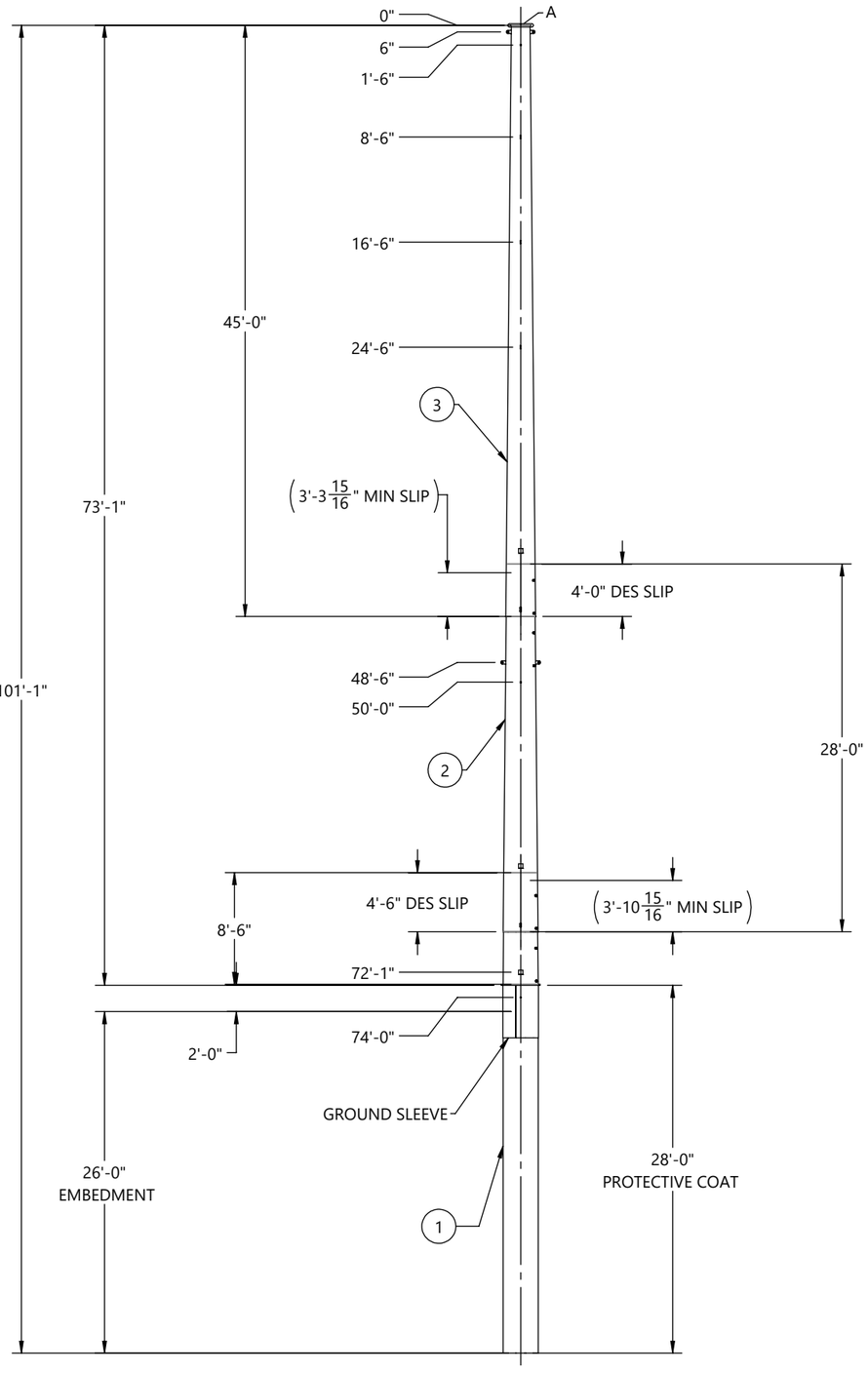

FRONT VIEW
(LOOKING @ 0° REF
ORIENTATION DETAIL)

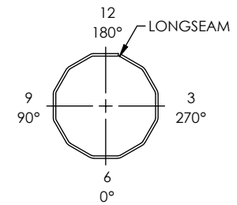

ORIENTATION DETAIL
TOP VIEW

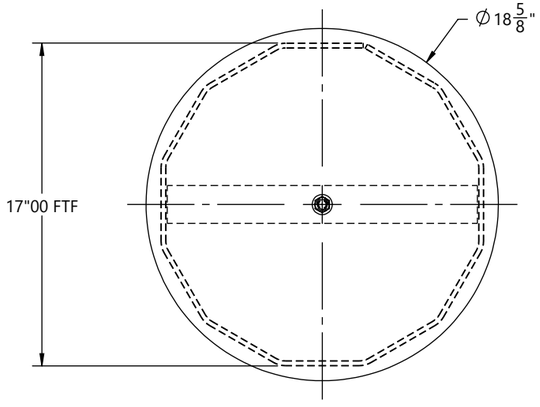

SECTION B-B

HOLE CHART		
HOLE SIZE (INCH)	DISTANCE FROM TOP OF SHAFT	FLAT(S)
13/16"	9'-0"	3, 9
13/16"	10'-0"	3, 9
13/16"	17'-0"	3, 9
13/16"	18'-0"	3, 9
13/16"	25'-0"	3, 9
13/16"	26'-0"	3, 9
11/16"	33'-0"	6,12
11/16"	34'-0"	6,12
11/16"	37'-0"	6,12
11/16"	38'-0"	6,12
11/16"	41'-0"	6,12
11/16"	42'-0"	6,12

CUSTOMER PLEASE VERIFY
HOLES AT 41'-0" & 42'-0"ELEVATION ,
ARE FALLING ON SLIP, PLEASE SUGGEST

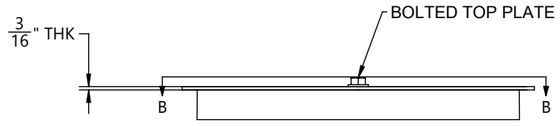

DETAIL A

BY		DATE
DRAWN:	KR	07/17/2026
CHK'D:	EV	07/17/2026

REV.	ECR #	DESCRIPTION	APPROVED BY	DATE
1		SUBMITTAL FOR APPROVAL	EV	07/17/2026

REVISIONS

CHM INDUSTRIES
700 E. McLEROY BLVD
SAGINAW, TEXAS 76179
682.286.0046 PH
682.286.0086 FX
CHMINDUSTRIES.COM

(SEE CHM IND., INC. PROCEDURE CHM-PR-1.7.3-F1 FOR STANDARD TOLERANCES)

QTY: 1 | GLM: (FT-K) 1281.5 | JOB NO. 12899 | PART NO. 12899-00100-MN | DWG NO. 12899-00100

CUST NAME: GREENVILLE UTILITIES STEEL STRUCTURES- NC
STR #: 44 TYPE/CLASS-HEIGHT: S18-75'-0"
DESCRIPTION: STRUCTURE, 32.05" X 17.00" X 73'-0"

SCALE: NTS
DO NOT SCALE DRAWING
REV. 1 | SHEET: 1 of 6

THIS DWG IS PROPERTY OF CHM INDUSTRIES AND CONTAINS PROPRIETARY INFORMATION WHICH MAY NOT BE COPIED OR REPRODUCED WITHOUT PRIOR WRITTEN CONSENT FROM CHM INDUSTRIES.

FINISH:	BLACK WEIGHT	GALVANIZED WEIGHT
GALVANIZED	4394 LBS	4658 LBS
WEIGHTS ABOVE INCLUDE ALL BOM ITEMS		

SEE GENERAL NOTES AND DETAILS SHEET FOR SUPPLEMENTARY INFORMATION

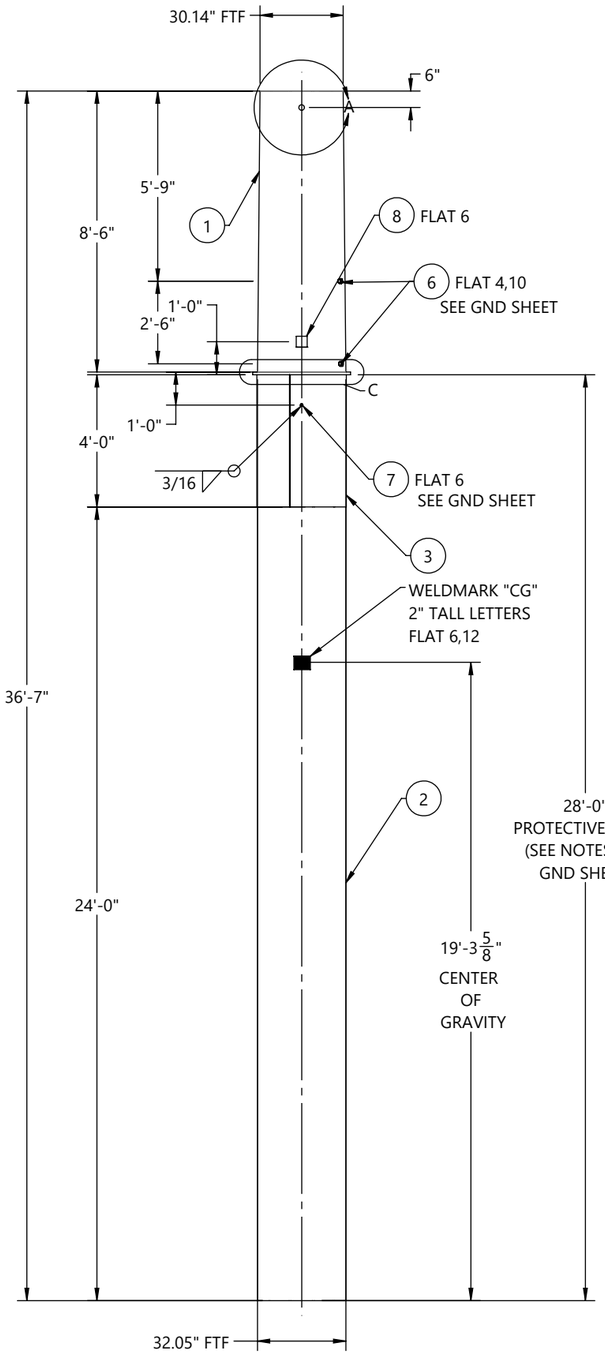

FRONT VIEW
(LOOKING @ 0° REF
ORIENTATION DETAIL)

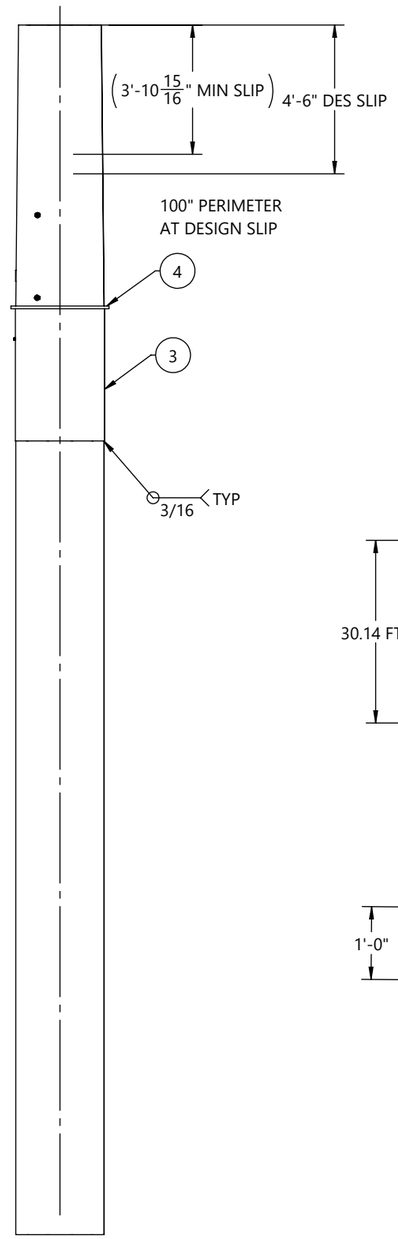

SIDE VIEW
(LOOKING @ 270° REF
ORIENTATION DETAIL)

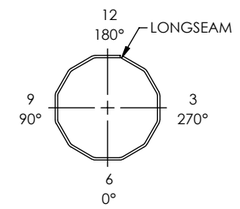

ORIENTATION DETAIL
TOP VIEW

ITEM #	PART #	DESCRIPTION	MAT'L	QTY.
1	12899-00100-SHB	SHAFT, 12S, 32.05" X 30.14" X 5/16" X 8'-6"	A572 GR65	1
2	12899-00100-CAS-SHS	SHAFT, 12S, 32.05" X 32.05" X 5/16" X 28'-0"	A572 GR65	1
3	12899-00100-CAS-SHG	GND SLV HALF, 12S, 32.43" X 32.43" X 3/16" X 4'-0"	A572 GR65	2
4	12899-00100-PLT	SPLICE PLATE, Ø35 9/16" X 1"	A572 GR65	1
5	12899-00100-EAR	DRIVING EAR 1'-0" X 1'-2 1/2" X 1"	A572 GR65	2
6	43026	NUT, HEAVY HEX, 1-8, A563 DH3	A563-DH3	4
7	43010	NUT, HEAVY HEX, 1/2-13, HDG, A563 DH	A563-DH	1
8	B22011	4X4 ID TAG, A588	A588	1

GREENVILLE UTILITIES STEEL STRUCTURES- NC
STR#: 44, S18-75'-0"
GLM: 1281.5 FT-K
STR WT: 10474 LBS
SEC WT: 4658 LBS
DOM: [mm/YYYY]
CHM-12899-00100
12899-00100-BOT

ID TAG

TEXT TO BE 7/16" LETTERS
TAGS TO BE ORIENTED ON 0° FLAT
WEIGHT ON ID TAG IS FINISHED GALV. WEIGHT

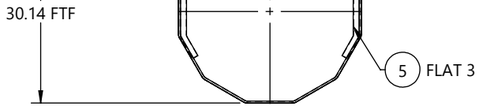

SECTION B-B

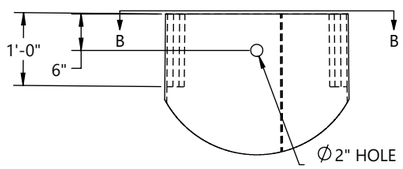

DETAIL A

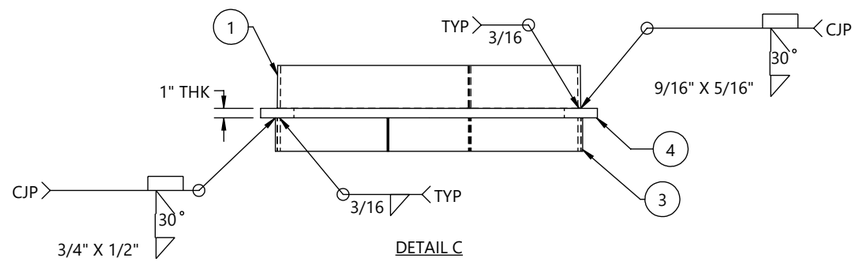

DETAIL C

REV.	ECR #	DESCRIPTION	APPROVED BY	DATE
1		SUBMITTAL FOR APPROVAL	EV	07/17/2026

REVISIONS

BY		DATE
DRAWN:	KR	07/17/2026
CHK'D:	EV	07/17/2026

CHM INDUSTRIES
700 E. McLEROY BLVD
SAGINAW, TEXAS 76179
682.286.0046 PH
682.286.0086 FX
CHMINDUSTRIES.COM

(SEE CHM IND., INC. PROCEDURE CHM-PR-1.7.3-F1 FOR STANDARD TOLERANCES)

QTY: 1 | GLM: (FT-K) 1281.5 | JOB NO. 12899 | PART NO. 12899-00100-BOT | DWG NO. 12899-00100

CUST NAME: GREENVILLE UTILITIES STEEL STRUCTURES- NC
STR #: 44 TYPE/CLASS-HEIGHT: S18-75'-0"
DESCRIPTION: BOTTOM SECTION, 32.05" X 30.14" X 5/16" X 8'-6"

SCALE: NTS
DO NOT SCALE DRAWING
REV.: 1 | SHEET: 2 of 6

THIS DWG IS PROPERTY OF CHM INDUSTRIES AND CONTAINS PROPRIETARY INFORMATION WHICH MAY NOT BE COPIED OR REPRODUCED WITHOUT PRIOR WRITTEN CONSENT FROM CHM INDUSTRIES.

FINISH:	BLACK WEIGHT	GALVANIZED WEIGHT
GALVANIZED	2731 LBS	2895 LBS
WEIGHTS ABOVE INCLUDE ALL BOM ITEMS		

SEE GENERAL NOTES AND DETAILS SHEET FOR SUPPLEMENTARY INFORMATION

ITEM #	PART #	DESCRIPTION	MAT'L	QTY.
1	12899-00100-SHM	SHAFT, 12S, 31.90" X 25.60" X 5/16" X 28'-0"	A572 GR65	1
2	12899-00100-VS205	VANG, OBROUND, 2-SIDED, 36 5/16" X 3" X 5/8"	A572 GR65	1
3	43026	NUT, HEAVY HEX, 1-8, A563 DH3	A563-DH3	8
4	43010	NUT, HEAVY HEX, 1/2-13, HDG, A563 DH	A563-DH	1
5	B22011	4X4 ID TAG, A588	A588	1

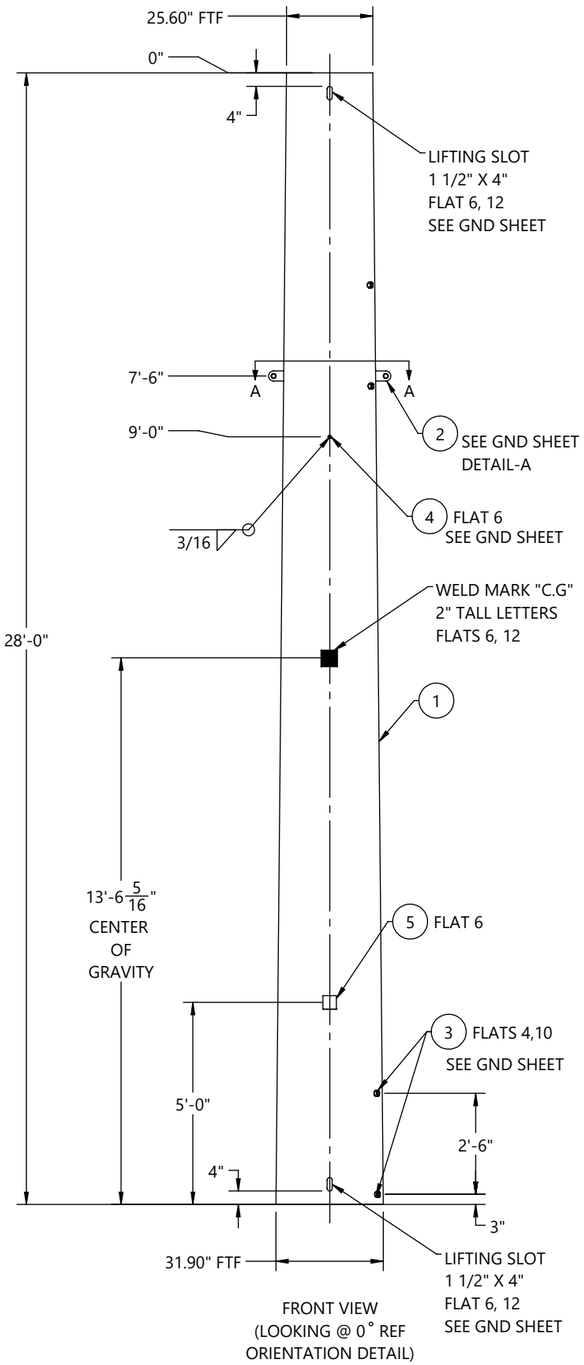

FRONT VIEW
(LOOKING @ 0° REF
ORIENTATION DETAIL)

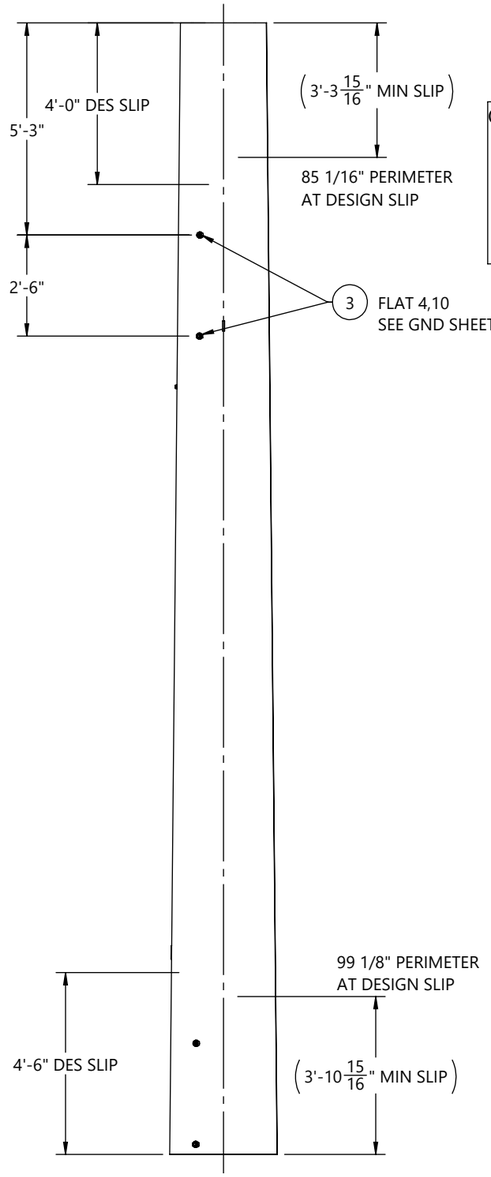

SIDE VIEW
(LOOKING @ 270° REF
ORIENTATION DETAIL)

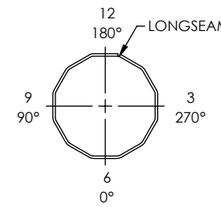

ORIENTATION DETAIL
TOP VIEW

GREENVILLE UTILITIES STEEL STRUCTURES- NC
STR#: 44, S18-75'-0"
SEC WT: 2895 LBS
DOM: [mm/YYYY]
CHM-12899-00100
12899-00100-MID

ID TAG

TEXT TO BE 7/16" LETTERS
TAGS TO BE ORIENTED ON 0° FLAT
WEIGHT ON ID TAG IS FINISHED GALV. WEIGHT

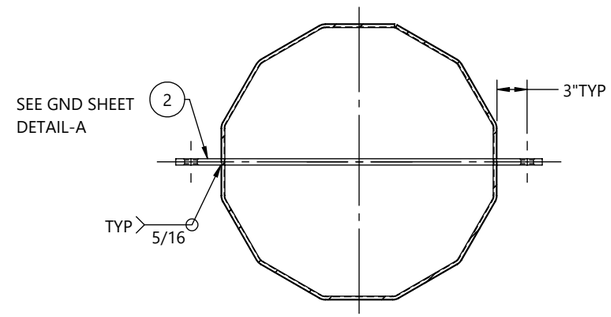

SECTION A-A

BY		DATE
DRAWN:	KR	07/17/2026
CHK'D:	EV	07/17/2026

(SEE CHM IND., INC. PROCEDURE CHM-PR-1.7.3-F1 FOR STANDARD TOLERANCES)

REV.	ECR #	DESCRIPTION	APPROVED BY	DATE
1		SUBMITTAL FOR APPROVAL	EV	07/17/2026

REVISIONS

CHM INDUSTRIES
700 E. McLEROY BLVD
SAGINAW, TEXAS 76179
682.286.0046 PH
682.286.0086 FX
CHMINDUSTRIES.COM

QTY: 1 | GLM: (FT-K) 1281.5 | JOB NO. 12899 | PART NO. 12899-00100-MID | DWG NO. 12899-00100

CUST NAME: GREENVILLE UTILITIES STEEL STRUCTURES- NC
STR #: 44 TYPE/CLASS-HEIGHT: S18-75'-0"
DESCRIPTION: MIDDLE SECTION, 31.90" X 25.60" X 5/16" X 28'-0"

SCALE: NTS
DO NOT SCALE DRAWING
REV. 1 | SHEET: 3 of 6

THIS DWG IS PROPERTY OF CHM INDUSTRIES AND CONTAINS PROPRIETARY INFORMATION WHICH MAY NOT BE COPIED OR REPRODUCED WITHOUT PRIOR WRITTEN CONSENT FROM CHM INDUSTRIES.

FINISH:	BLACK WEIGHT	GALVANIZED WEIGHT
GALVANIZED	2756 LBS	2921 LBS
WEIGHTS ABOVE INCLUDE ALL BOM ITEMS		

SEE GENERAL NOTES AND DETAILS SHEET FOR SUPPLEMENTARY INFORMATION

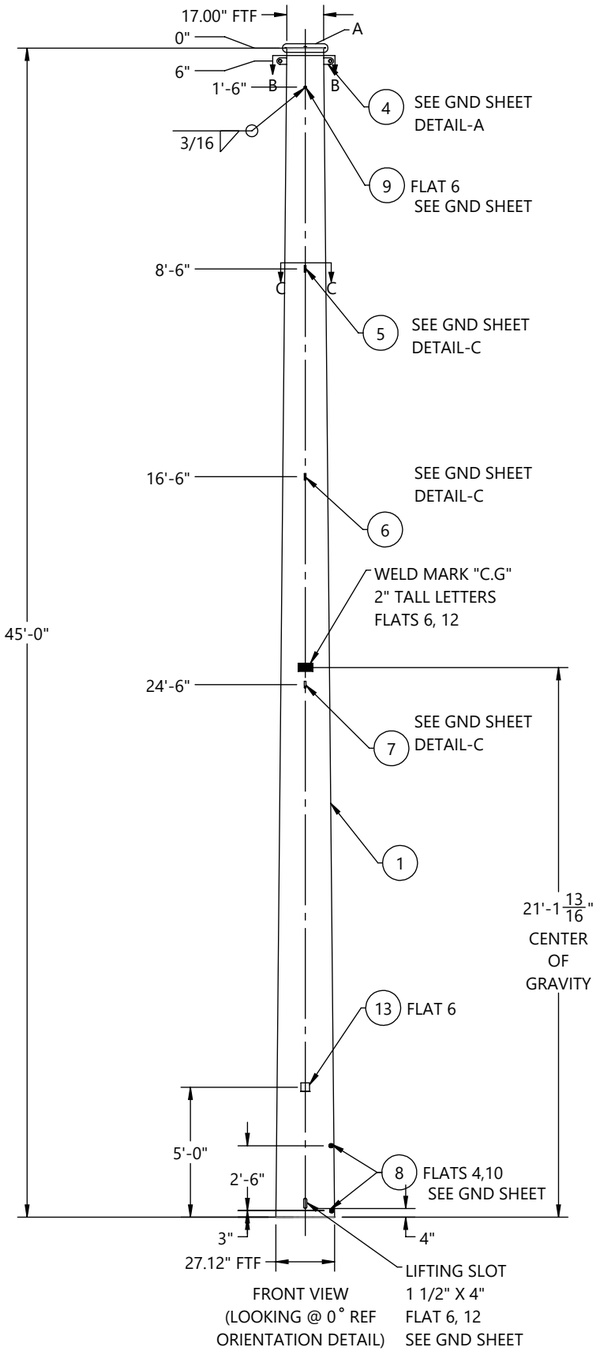

FRONT VIEW
(LOOKING @ 0° REF ORIENTATION DETAIL)

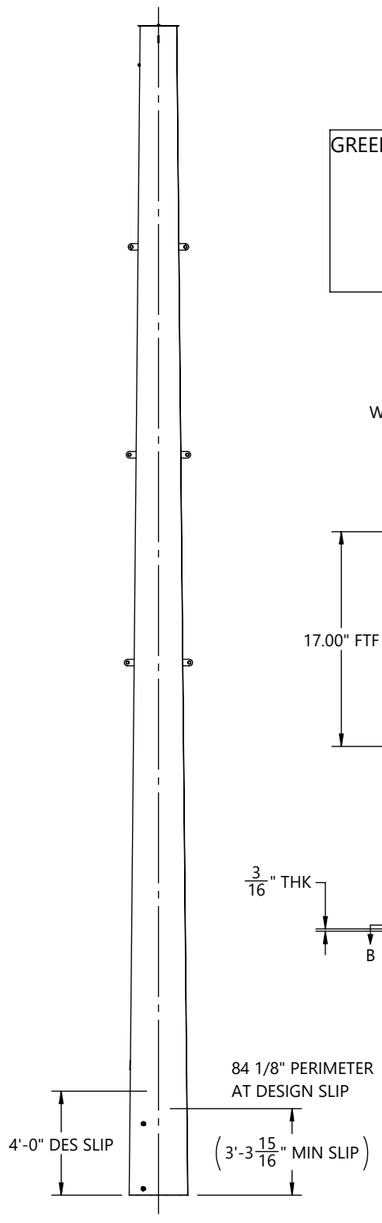

SIDE VIEW
(LOOKING @ 270° REF ORIENTATION DETAIL)

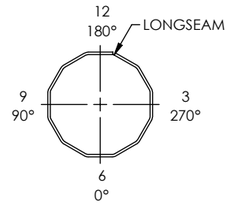

ORIENTATION DETAIL
TOP VIEW

GREENVILLE UTILITIES STEEL STRUCTURES- NC
STR#: 44, S18-75'-0"
SEC WT: 2921 LBS
DOM: [mm/YYYY]
CHM-12899-00100
12899-00100-TOP

ID TAG

TEXT TO BE 7/16" LETTERS
TAGS TO BE ORIENTED ON 0° FLAT
WEIGHT ON ID TAG IS FINISHED GALV. WEIGHT

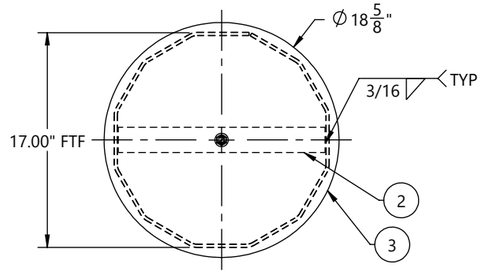

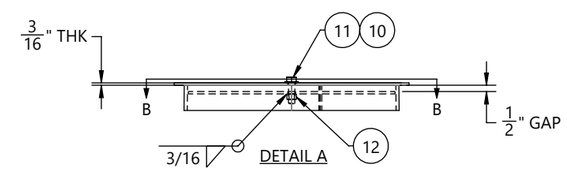

BOM TABLE				
ITEM #	PART #	DESCRIPTION	MAT'L	QTY.
1	12899-00100-SHT	SHAFT, 12S, 27.12" X 17.00" X 1/4" X 45'-0"	A572 GR65	1
2	12899-00100-TS	TOP STRAP, 16 3/8" X 2" X 3/16"	A572 GR65	1
3	12899-00100-CP	COVER PLATE, Ø18 5/8" X 3/16"	A572 GR65	1
4	12899-00100-VS201	VANG, OBROUND, 2-SIDED, 26 1/8" X 3" X 5/8"	A572 GR65	1
5	12899-00100-VS202	VANG, OBROUND, 2-SIDED, 27 15/16" X 3" X 3/4"	A572 GR65	1
6	12899-00100-VS203	VANG, OBROUND, 2-SIDED, 29 11/16" X 3" X 3/4"	A572 GR65	1
7	12899-00100-VS204	VANG, OBROUND, 2-SIDED, 31 1/2" X 3" X 3/4"	A572 GR65	1
8	43026	NUT, HEAVY HEX, 1-8, A563 DH3	A563-DH3	4
9	43010	NUT, HEAVY HEX, 1/2-13, HDG, A563 DH	A563-DH	1
10	44018	WASHER, FLAT, 1/2", HDG, F436 T1	F436-T1	1
11	42120	BOLT, 1/2-13 X 1-3/4", HDG, HH, A307 A	A307-A	1
12	43029	NUT, HEX, 1/2-13, BLK, A563 DH	A563-DH	1
13	B22011	4X4 ID TAG, A588	A588	1

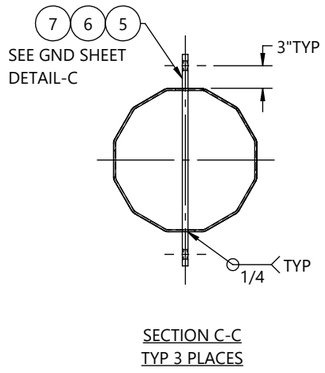

SECTION C-C
TYP 3 PLACES

HOLE CHART		
HOLE SIZE (INCH)	DISTANCE FROM TOP OF SHAFT	FLAT(S)
13/16"	9'-0"	3, 9
13/16"	10'-0"	3, 9
13/16"	17'-0"	3, 9
13/16"	18'-0"	3, 9
13/16"	25'-0"	3, 9
13/16"	26'-0"	3, 9
11/16"	33'-0"	6,12
11/16"	34'-0"	6,12
11/16"	37'-0"	6,12
11/16"	38'-0"	6,12
11/16"	41'-0"	6,12
11/16"	42'-0"	6,12

CUSTOMER PLEASE VERIFY
HOLES AT 41'-0" & 42'-0"ELEVATION ,
ARE FALLING ON SLIP PLEASE SUGGEST

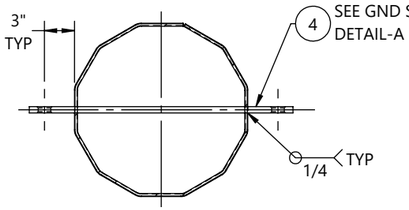

SECTION B-B

BY		DATE
DRAWN:	KR	07/17/2026
CHK'D:	EV	07/17/2026

REV.	ECR #	DESCRIPTION	APPROVED BY	DATE
1		SUBMITTAL FOR APPROVAL	EV	07/17/2026

REVISIONS

CHM INDUSTRIES
700 E. McLEROY BLVD
SAGINAW, TEXAS 76179
682.286.0046 PH
682.286.0086 FX
CHMINDUSTRIES.COM

(SEE CHM IND., INC. PROCEDURE CHM-PR-1.7.3-F1 FOR STANDARD TOLERANCES)

QTY: 1	GLM: (FT-K) 1281.5	JOB NO. 12899	PART NO. 12899-00100-TOP	DWG NO. 12899-00100

CUST NAME: GREENVILLE UTILITIES STEEL STRUCTURES- NC
STR #: 44 TYPE/CLASS-HEIGHT: S18-75'-0"
DESCRIPTION: TOP SECTION, 27.12" X 17.00" X 1/4" X 45'-0"

SCALE: NTS
DO NOT SCALE DRAWING
REV.: 1
SHEET: 4 of 6

THIS DWG IS PROPERTY OF CHM INDUSTRIES AND CONTAINS PROPRIETARY INFORMATION WHICH MAY NOT BE COPIED OR REPRODUCED WITHOUT PRIOR WRITTEN CONSENT FROM CHM INDUSTRIES.

SEE GENERAL NOTES AND DETAILS SHEET FOR SUPPLEMENTARY INFORMATION

INDIVIDUAL STRUCTURE BILL OF MATERIALS			
ITEM NO.	PART NUMBER	DESCRIPTION	QTY.
1	12899-00100-BOT	BOTTOM SECTION, 32.05" X 30.14" X 5/16" X 8'-6"	1
1.1	12899-00100-SHB	SHAFT, 12S, 32.05" X 30.14" X 5/16" X 8'-6"	1
1.2	B22011	4X4 ID TAG, A588	1
1.3	43026	NUT, HEAVY HEX, 1-8, A563 DH3	4
1.4	12899-00100-EAR	DRIVING EAR 1'-0" X 1'-2 1/2" X 1"	2
1.5	ASSY-00100-CAS-MN	STRUCTURE, 32.05" X 32.05" X 28'-0"	1
1.5.1	ASSY-00100-CAS-SNG	SINGLE SECTION, 32.05" X 32.05" X 5/16" X 28'-0"	1
1.5.1.1	12899-00100-CAS-SHS	SHAFT, 12S, 32.05" X 32.05" X 5/16" X 28'-0"	1
1.5.1.2	12899-00100-CAS-SHG	GND SLV HALF, 12S, 32.43" X 32.43" X 3/16" X 4'-0"	2
1.5.1.3	12899-00100-PLT	SPLICE PLATE, Ø35 9/16" X 1"	1
1.6	43010	NUT, HEAVY HEX, 1/2-13, HDG, A563 DH	1
2	12899-00100-MID	MIDDLE SECTION, 31.90" X 25.60" X 5/16" X 28'-0"	1
2.1	12899-00100-SHM	SHAFT, 12S, 31.90" X 25.60" X 5/16" X 28'-0"	1
2.2	B22011	4X4 ID TAG, A588	1
2.3	43026	NUT, HEAVY HEX, 1-8, A563 DH3	8
2.4	12899-00100-VS205	VANG, OBROUND, 2-SIDED, 36 5/16" X 3" X 5/8"	1
2.5	43010	NUT, HEAVY HEX, 1/2-13, HDG, A563 DH	1
3	12899-00100-TOP	TOP SECTION, 27.12" X 17.00" X 1/4" X 45'-0"	1
3.1	12899-00100-SHT	SHAFT, 12S, 27.12" X 17.00" X 1/4" X 45'-0"	1
3.2	12899-00100-TS	TOP STRAP, 16 3/8" X 2" X 3/16"	1
3.3	12899-00100-VS201	VANG, OBROUND, 2-SIDED, 26 1/8" X 3" X 5/8"	1
3.4	B22011	4X4 ID TAG, A588	1
3.5	43026	NUT, HEAVY HEX, 1-8, A563 DH3	4
3.6	43010	NUT, HEAVY HEX, 1/2-13, HDG, A563 DH	1
3.7	12899-00100-CP	COVER PLATE, Ø18 5/8" X 3/16"	1
3.8	44018	WASHER, FLAT, 1/2", HDG, F436 T1	1
3.9	42120	BOLT, 1/2-13 X 1-3/4", HDG, HH, A307 A	1
3.10	43029	NUT, HEX, 1/2-13, BLK, A563 DH	1
3.11	12899-00100-VS202	VANG, OBROUND, 2-SIDED, 27 15/16" X 3" X 3/4"	1
3.12	12899-00100-VS203	VANG, OBROUND, 2-SIDED, 29 11/16" X 3" X 3/4"	1
3.13	12899-00100-VS204	VANG, OBROUND, 2-SIDED, 31 1/2" X 3" X 3/4"	1

BY		DATE
DRAWN:	KR	07/17/2026
CHK'D:	EV	07/17/2026

CHM INDUSTRIES
700 E. McLEROY BLVD
SAGINAW, TEXAS 76179
682.286.0046 PH
682.286.0086 FX
CHMINDUSTRIES.COM

(SEE CHM IND., INC. PROCEDURE CHM-PR-1.7.3-F1 FOR STANDARD TOLERANCES)

QTY: 1	GLM: (FT-K) 1281.5	JOB NO. 12899	PART NO. 12899-00100-SBOM	DWG NO. 12899-00100

CUST NAME: GREENVILLE UTILITIES STEEL STRUCTURES- NC
STR #: 44 TYPE/CLASS-HEIGHT: S18-75'-0"
DESCRIPTION: STRUCTURE, 32.05" X 17.00" X 73'-0"

SCALE: NTS DO NOT SCALE DRAWING
REV. 1
SHEET: 5 of 6

THIS DWG IS PROPERTY OF CHM INDUSTRIES AND CONTAINS PROPRIETARY INFORMATION WHICH MAY NOT BE COPIED OR REPRODUCED WITHOUT PRIOR WRITTEN CONSENT FROM CHM INDUSTRIES.

SEE GENERAL NOTES AND DETAILS SHEET FOR SUPPLEMENTARY INFORMATION

TOTAL JOB MATERIAL REQUIREMENTS				
ITEM NO.	PART NUMBER	DESCRIPTION	QTY.	JOB QTY.
1	42120	BOLT, 1/2-13 X 1-3/4", HDG, HH, A307 A	1	1
2	43026	NUT, HEAVY HEX, 1-8, A563 DH3	16	16
3	44018	WASHER, FLAT, 1/2", HDG, F436 T1	1	1
4	B22011	4X4 ID TAG, A588	3	3
5	12899-00100-VS201	VANG, OBROUND, 2-SIDED, 26 1/8" X 3" X 5/8"	1	1
6	12899-00100-CP	COVER PLATE, Ø18 5/8" X 3/16"	1	1
7	12899-00100-SHB	SHAFT, 12S, 32.05" X 30.14" X 5/16" X 8'-6"	1	1
8	12899-00100-SHM	SHAFT, 12S, 31.90" X 25.60" X 5/16" X 28'-0"	1	1
9	12899-00100-SHT	SHAFT, 12S, 27.12" X 17.00" X 1/4" X 45'-0"	1	1
10	12899-00100-TS	TOP STRAP, 16 3/8" X 2" X 3/16"	1	1
11	12899-00100-VS205	VANG, OBROUND, 2-SIDED, 36 5/16" X 3" X 5/8"	1	1
12	43010	NUT, HEAVY HEX, 1/2-13, HDG, A563 DH	3	3
13	43029	NUT, HEX, 1/2-13, BLK, A563 DH	1	1
14	12899-00100-EAR	DRIVING EAR 1'-0" X 1'-2 1/2" X 1"	2	2
15	12899-00100-VS202	VANG, OBROUND, 2-SIDED, 27 15/16" X 3" X 3/4"	1	1
16	12899-00100-VS203	VANG, OBROUND, 2-SIDED, 29 11/16" X 3" X 3/4"	1	1
17	12899-00100-VS204	VANG, OBROUND, 2-SIDED, 31 1/2" X 3" X 3/4"	1	1
18	12899-00100-CAS-SHS	SHAFT, 12S, 32.05" X 32.05" X 5/16" X 28'-0"	1	1
19	12899-00100-CAS-SHG	GND SLV HALF, 12S, 32.43" X 32.43" X 3/16" X 4'-0"	2	2
20	12899-00100-PLT	SPLICE PLATE, Ø35 9/16" X 1"	1	1

BY		DATE
DRAWN:	KR	07/17/2026
CHK'D:	EV	07/17/2026

CHM INDUSTRIES

700 E. McLEROY BLVD
SAGINAW, TEXAS 76179
682.286.0046 PH
682.286.0086 FX
CHMINDUSTRIES.COM

(SEE CHM IND., INC. PROCEDURE CHM-PR-1.7.3-F1 FOR STANDARD TOLERANCES)

QTY: 1 | GLM: (FT-K) 1281.5 | JOB NO. 12899 | PART NO. 12899-00100-PBOM | DWG NO. 12899-00100

CUST NAME: GREENVILLE UTILITIES STEEL STRUCTURES- NC

STR #: 44 TYPE/CLASS-HEIGHT: S18-75'-0"

DESCRIPTION: STRUCTURE, 32.05" X 17.00" X 73'-0"

SCALE: NTS DO NOT SCALE DRAWING

REV: 1 SHEET: 6 of 6

THIS DWG IS PROPERTY OF CHM INDUSTRIES AND CONTAINS PROPRIETARY INFORMATION WHICH MAY NOT BE COPIED OR REPRODUCED WITHOUT PRIOR WRITTEN CONSENT FROM CHM INDUSTRIES.

FINISH:	BLACK WEIGHT	GALVANIZED WEIGHT
GALVANIZED	10139 LBS	10747 LBS
WEIGHTS ABOVE INCLUDE ALL BOM ITEMS		

SEE GENERAL NOTES AND DETAILS SHEET FOR SUPPLEMENTARY INFORMATION

ITEM #	PART #	DESCRIPTION	QTY.
1	12899-00200-BOT	BOTTOM SECTION, 31.78" X 29.91" X 5/16" X 8'-6"	1
2	12899-00200-MID	MIDDLE SECTION, 31.65" X 24.45" X 5/16" X 32'-9"	1
3	12899-00200-TOP	TOP SECTION, 25.90" X 16.00" X 1/4" X 45'-0"	1

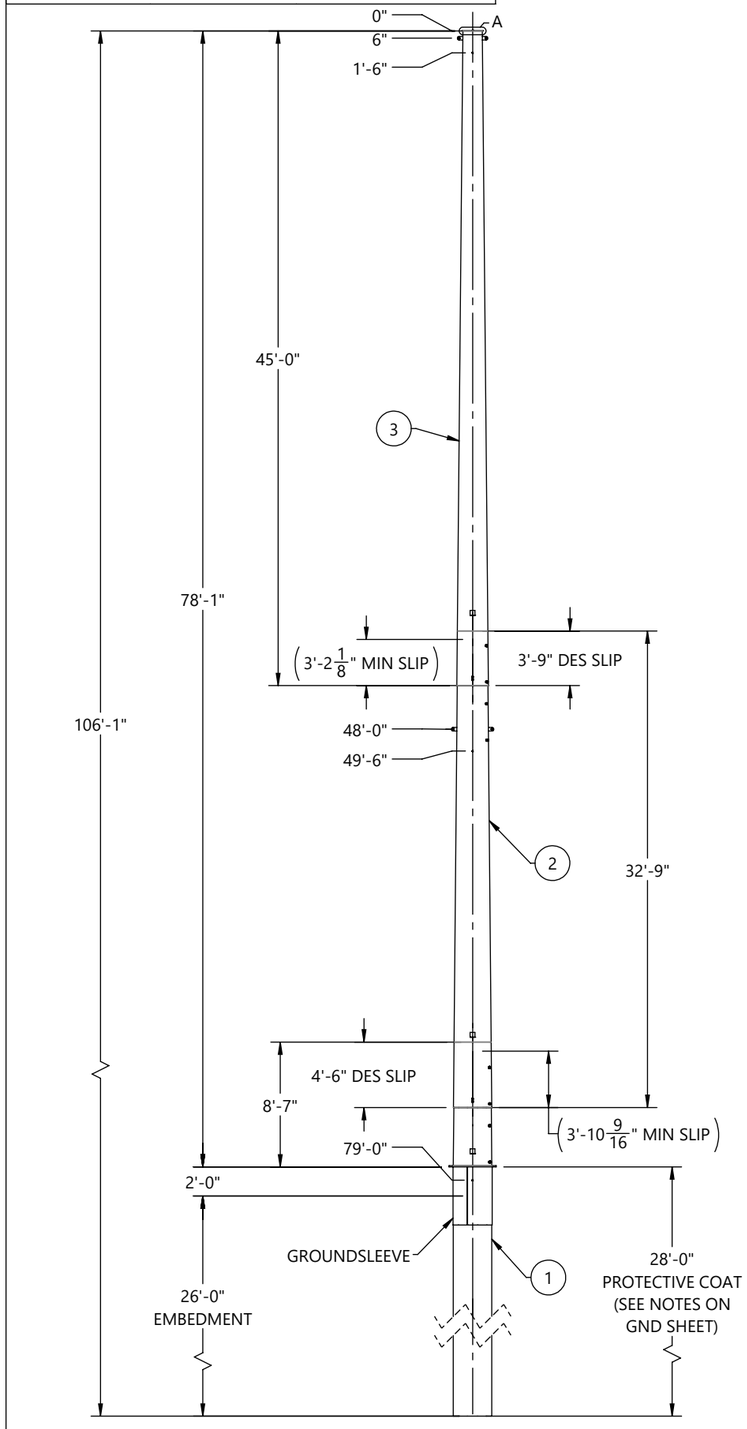

FRONT VIEW
(LOOKING @ 0° REF
ORIENTATION DETAIL)

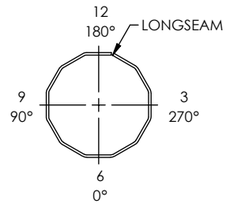

ORIENTATION DETAIL
TOP VIEW

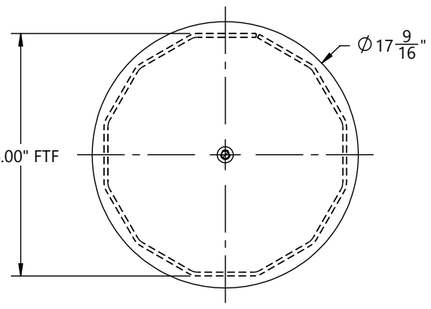

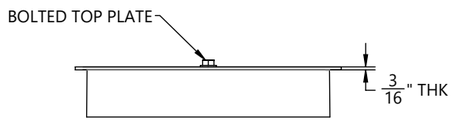

DETAIL A

HOLE CHART		
HOLE SIZE (INCH)	DISTANCE FROM TOP OF SHAFT	FLAT(S)
13/16"	8' - 0"	3, 9
13/16"	9' - 0"	3, 9
13/16"	16' - 0"	3, 9
13/16"	17' - 0"	3, 9
13/16"	24' - 0"	3, 9
13/16"	25' - 0"	3, 9
11/16"	33' - 0"	6, 12
11/16"	34' - 0"	6, 12
11/16"	37' - 0"	6, 12
11/16"	38' - 0"	6, 12
11/16"	41' - 0"	6, 12
11/16"	42' - 0"	6, 12

CUSTOMER PLEASE
VERIFY.
HOLES AT 41'-0", 42'-0"
ELEVATIONS ARE FALLING
IN BETWEEN SLIP JOINT,
PLEASE SUGGEST.

BY	DATE
DRAWN: KB	06/29/2026
CHK'D: EV	06/29/2026

REV.	ECR #	DESCRIPTION	APPROVED BY	DATE
1		SUBMITTAL FOR APPROVAL	EV	07/20/2026

REVISIONS

CHM INDUSTRIES
700 E. McLEROY BLVD
SAGINAW, TEXAS 76179
682.286.0046 PH
682.286.0086 FX
CHMINDUSTRIES.COM

(SEE CHM IND., INC. PROCEDURE CHM-PR-1.7.3-F1 FOR STANDARD TOLERANCES)

QTY: 1 | GLM: (FT-K) 1296.11 | JOB NO. 12899 | PART NO. 12899-00200-MN | DWG NO. 12899-00200

CUST NAME: GREENVILLE UTILITIES STEEL STRUCTURES- NC
STR #: 45 TYPE/CLASS-HEIGHT: S17-80'-0"
DESCRIPTION: STRUCTURE, 31.78" X 16.00" X 78'-0"

SCALE: NTS DO NOT SCALE DRAWING
REV. 1 | SHEET: 1 of 6

THIS DWG IS PROPERTY OF CHM INDUSTRIES AND CONTAINS PROPRIETARY INFORMATION WHICH MAY NOT BE COPIED OR REPRODUCED WITHOUT PRIOR WRITTEN CONSENT FROM CHM INDUSTRIES.

FINISH:	BLACK WEIGHT	GALVANIZED WEIGHT
GALVANIZED	4458 LBS	4725 LBS
WEIGHTS ABOVE INCLUDE ALL BOM ITEMS		

SEE GENERAL NOTES AND DETAILS SHEET FOR SUPPLEMENTARY INFORMATION

ITEM #	PART #	DESCRIPTION	MAT'L	QTY.
1	12899-00200-SHB	SHAFT, 12S, 31.78" X 29.91" X 5/16" X 8'-6"	A572 GR65	1
2	12899-00200-CAS-SHS	SHAFT, 12S, 31.78" X 31.78" X 5/16" X 28'-0"	A572 GR65	1
3	12899-00200-CAS-SHG	GND SLV HALF, 12S, 32.16" X 32.16" X 3/16" X 4'-0"	A572 GR65	2
4	12899-00200-PLT	SPLICE PLATE, Ø38 3/4" X 1"	A572 GR65	1
5	12899-00200-EAR	DRIVING EAR, 1'-0" X 1'-4" X1"	A572 GR65	2
6	B22011	4X4 ID TAG, A588	A588	1
7	43026	NUT, HEAVY HEX, 1-8, A563 DH3	A563-DH3	4
8	43010	NUT, HEAVY HEX, 1/2-13, HDG, A563 DH	A563-DH	1

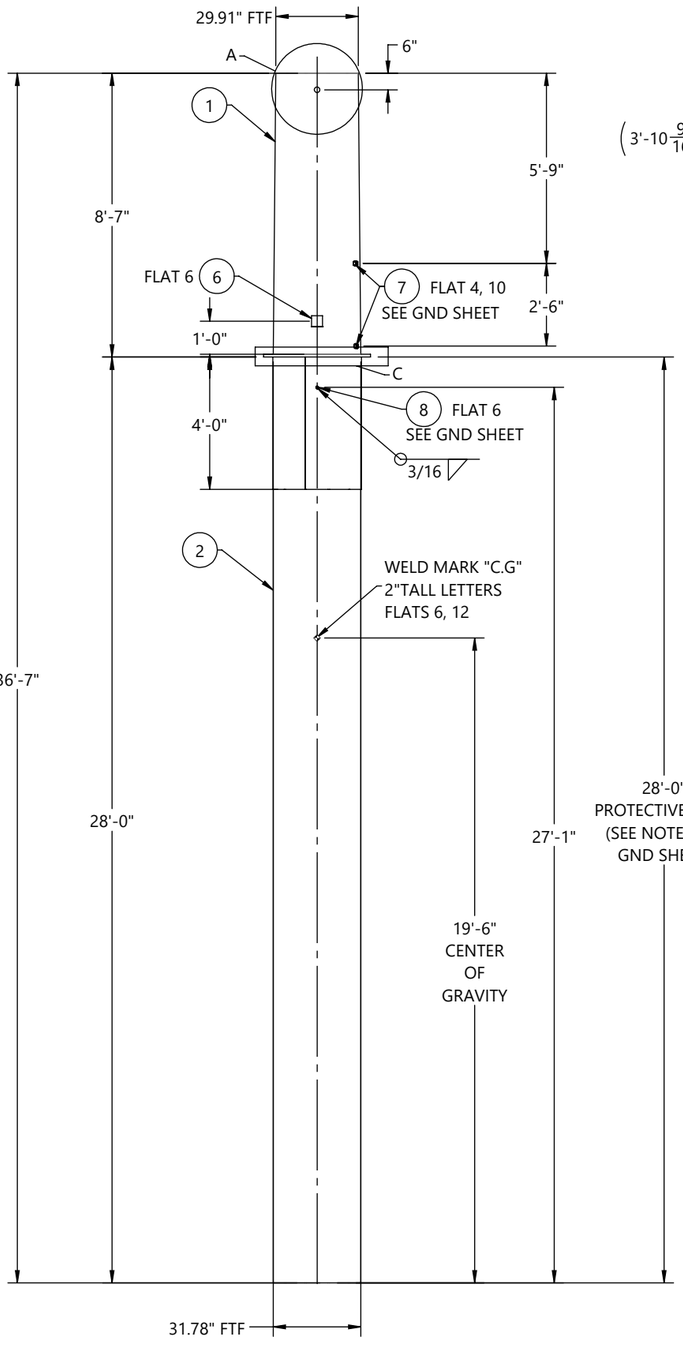

FRONT VIEW
(LOOKING @ 0° REF
ORIENTATION DETAIL)

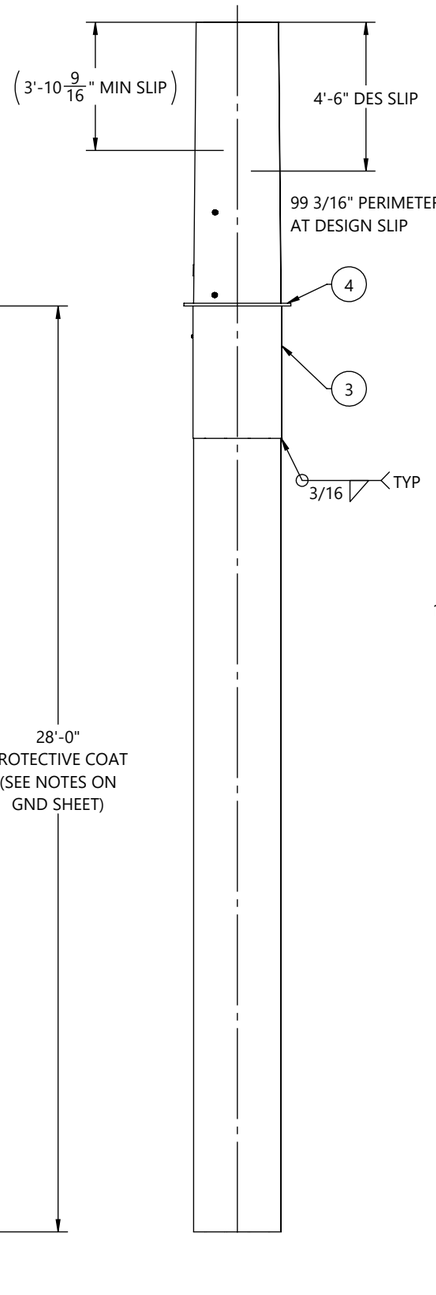

SIDE VIEW
(LOOKING @ 270° REF
ORIENTATION DETAIL)

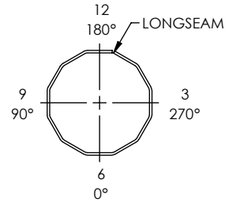

ORIENTATION DETAIL
TOP VIEW

GREENVILLE UTILITIES STEEL STRUCTURES- NC
STR#: 45, S17-80'-0"
GLM: 1296.11 FT-K
STR WT: 10747 LBS
SEC WT: 4725 LBS
DOM: [mm/YYYY]
CHM-12899-00200
12899-00200-BOT

ID TAG

TEXT TO BE 7/16" LETTERS
TAGS TO BE ORIENTED ON 0° FLAT
WEIGHT ON ID TAG IS FINISHED GALV. WEIGHT

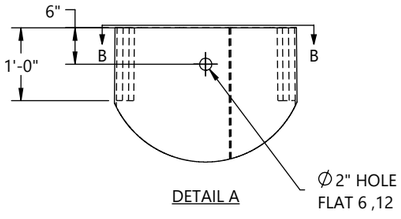

DETAIL A

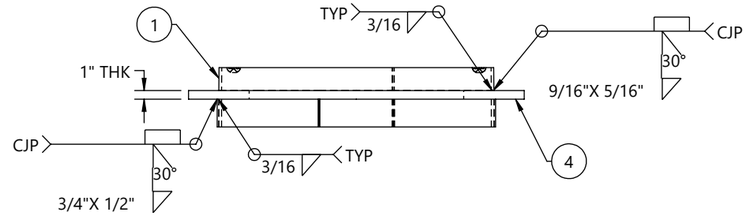

DETAIL C

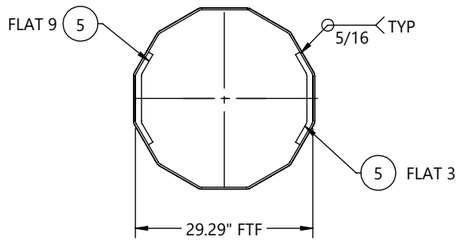

SECTION B-B

REV.	ECR #	DESCRIPTION	APPROVED BY	DATE
1		SUBMITTAL FOR APPROVAL	EV	07/20/2026

REVISIONS

BY	DATE
DRAWN: KB	06/29/2026
CHK'D: EV	06/29/2026

CHM INDUSTRIES
700 E. McLEROY BLVD
SAGINAW, TEXAS 76179
682.286.0046 PH
682.286.0086 FX
CHMINDUSTRIES.COM

(SEE CHM IND., INC. PROCEDURE CHM-PR-1.7.3-F1 FOR STANDARD TOLERANCES)

QTY: 1 | GLM: (FT-K) 1296.11 | JOB NO. 12899 | PART NO. 12899-00200-BOT | DWG NO. 12899-00200

CUST NAME: GREENVILLE UTILITIES STEEL STRUCTURES- NC
STR #: 45 TYPE/CLASS-HEIGHT: S17-80'-0"
DESCRIPTION: BOTTOM SECTION, 31.78" X 29.91" X 5/16" X 8'-6"

SCALE: NTS DO NOT SCALE DRAWING | REV. 1 | SHEET: 2 of 6

THIS DWG IS PROPERTY OF CHM INDUSTRIES AND CONTAINS PROPRIETARY INFORMATION WHICH MAY NOT BE COPIED OR REPRODUCED WITHOUT PRIOR WRITTEN CONSENT FROM CHM INDUSTRIES.

FINISH:	BLACK WEIGHT	GALVANIZED WEIGHT
GALVANIZED	3115 LBS	3302 LBS
WEIGHTS ABOVE INCLUDE ALL BOM ITEMS		

SEE GENERAL NOTES AND DETAILS SHEET FOR SUPPLEMENTARY INFORMATION

ITEM #	PART #	DESCRIPTION	MAT'L	QTY.
1	12899-00200-SHM	SHAFT, 12S, 31.65" X 24.45" X 5/16" X 32'-9"	A572 GR65	1
2	12899-00200-VS209	VANG, OBROUND, 2-SIDED, 34 15/16" X 3" X 5/8"	A572 GR65	1
3	43010	NUT, HEAVY HEX, 1/2-13, HDG, A563 DH	A563-DH	1
4	43026	NUT, HEAVY HEX, 1-8, A563 DH3	A563-DH3	8
5	B22011	4X4 ID TAG, A588	A588	1

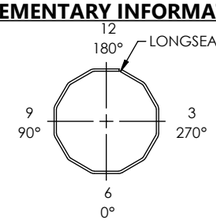

ORIENTATION DETAIL
TOP VIEW

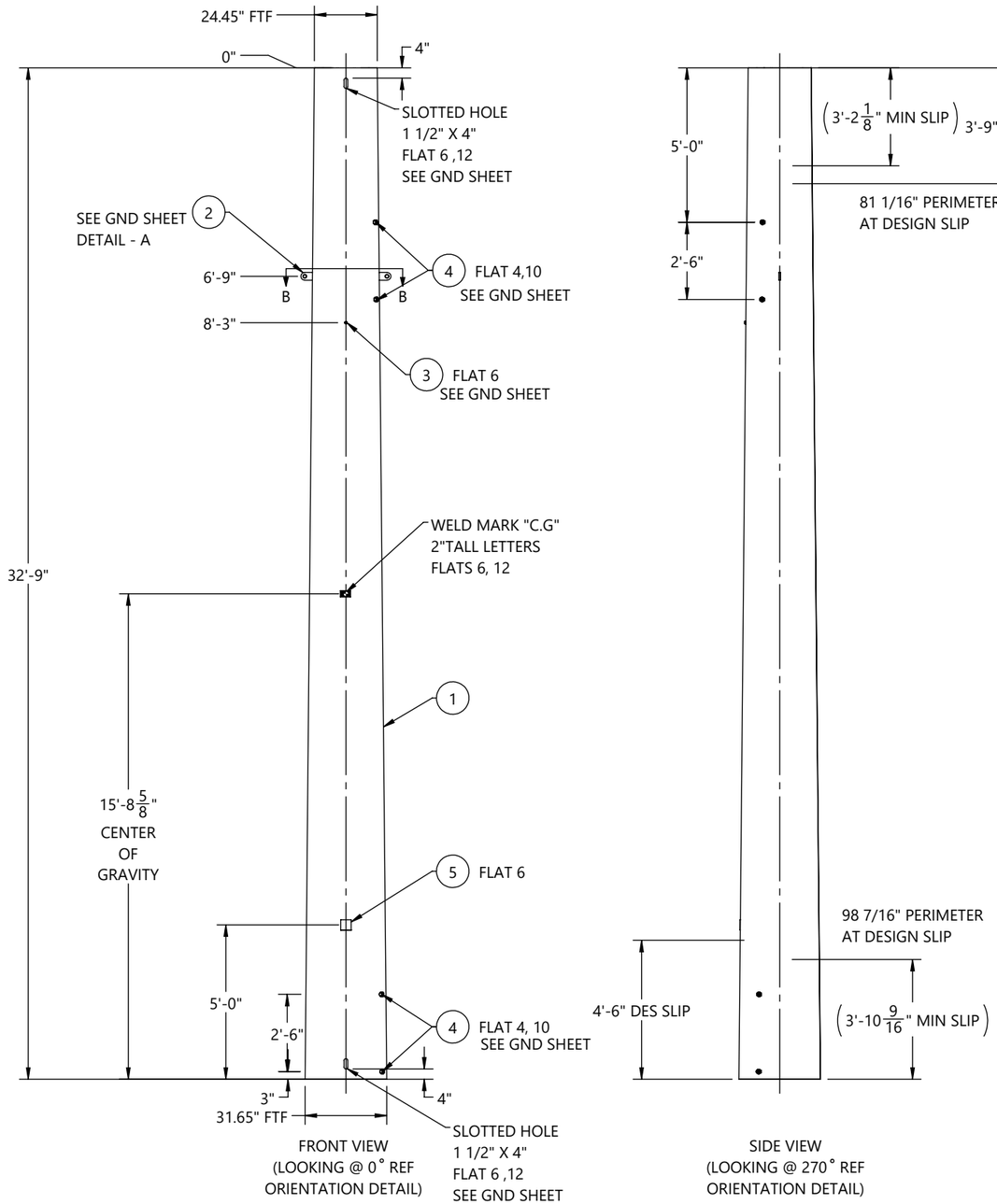

FRONT VIEW
(LOOKING @ 0° REF
ORIENTATION DETAIL)

SIDE VIEW
(LOOKING @ 270° REF
ORIENTATION DETAIL)

GREENVILLE UTILITIES STEEL STRUCTURES- NC
STR#: 45, S17-80'-0"
SEC WT: 3302 LBS
DOM: [mm/YYYY]
CHM-12899-00200
12899-00200-MID

ID TAG

TEXT TO BE 7/16" LETTERS
TAGS TO BE ORIENTED ON 0° FLAT
WEIGHT ON ID TAG IS FINISHED GALV. WEIGHT

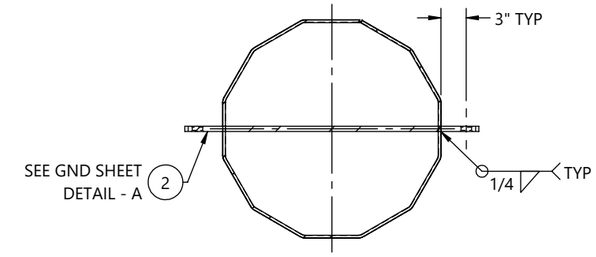

SECTION B-B

BY		DATE
DRAWN:	KB	06/29/2026
CHK'D:	EV	06/29/2026

REV.	ECR #	DESCRIPTION	APPROVED BY	DATE
1		SUBMITTAL FOR APPROVAL	EV	07/20/2026

REVISIONS

CHM INDUSTRIES
700 E. McLEROY BLVD
SAGINAW, TEXAS 76179
682.286.0046 PH
682.286.0086 FX
CHMINDUSTRIES.COM

(SEE CHM IND., INC. PROCEDURE CHM-PR-1.7.3-F1 FOR STANDARD TOLERANCES)

QTY: 1 | GLM: (FT-K) 1296.11 | JOB NO. 12899 | PART NO. 12899-00200-MID | DWG NO. 12899-00200

CUST NAME: GREENVILLE UTILITIES STEEL STRUCTURES- NC
STR #: 45 TYPE/CLASS-HEIGHT: S17-80'-0"
DESCRIPTION: MIDDLE SECTION, 31.65" X 24.45" X 5/16" X 32'-9"

SCALE: NTS DO NOT SCALE DRAWING
REV. 1 | SHEET: 3 of 6

THIS DWG IS PROPERTY OF CHM INDUSTRIES AND CONTAINS PROPRIETARY INFORMATION WHICH MAY NOT BE COPIED OR REPRODUCED WITHOUT PRIOR WRITTEN CONSENT FROM CHM INDUSTRIES.

FINISH:	BLACK WEIGHT	GALVANIZED WEIGHT
GALVANIZED	2565 LBS	2719 LBS
WEIGHTS ABOVE INCLUDE ALL BOM ITEMS		

SEE GENERAL NOTES AND DETAILS SHEET FOR SUPPLEMENTARY INFORMATION

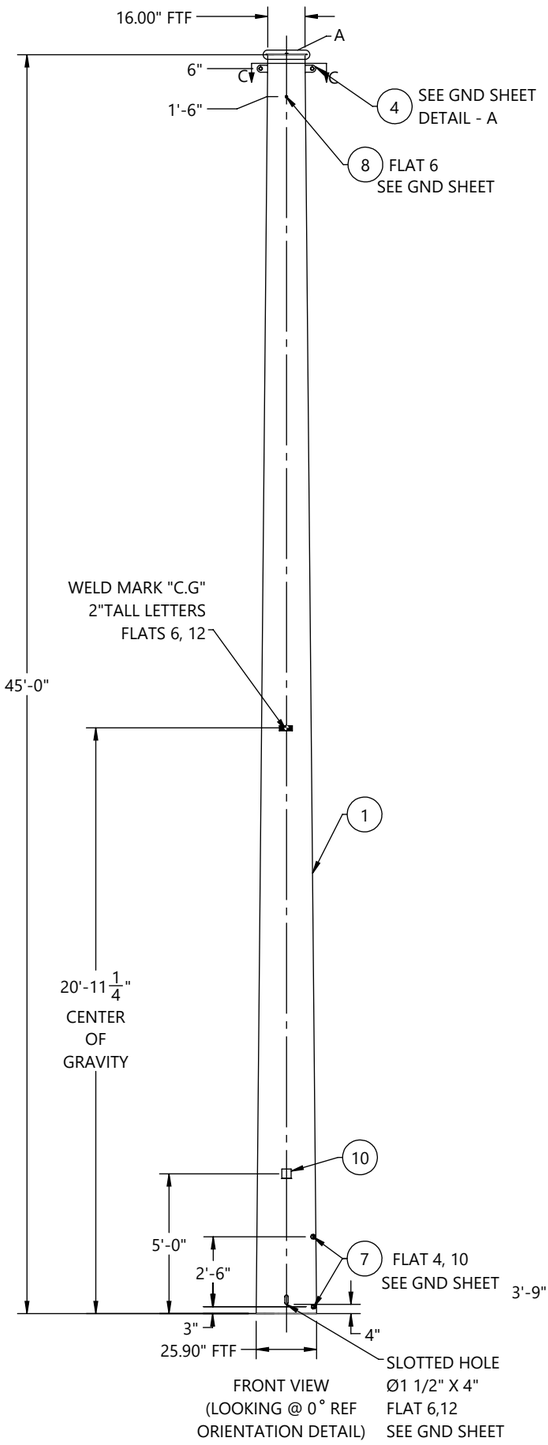

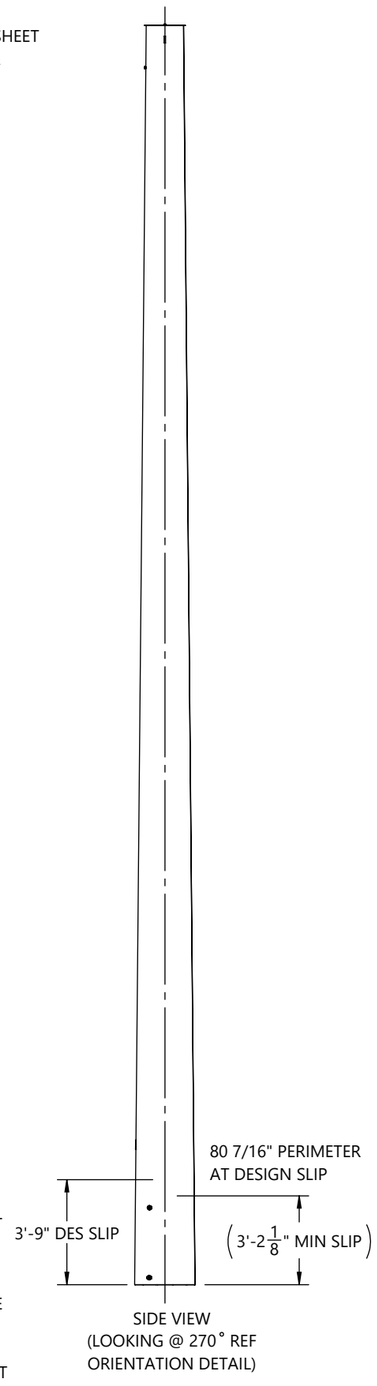

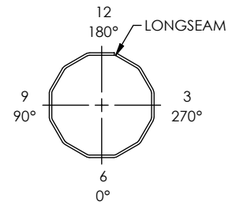

ORIENTATION DETAIL
TOP VIEW

ITEM #	PART #	DESCRIPTION	MAT'L	QTY.
1	12899-00200-SHT	SHAFT, 12S, 25.90" X 16.00" X 1/4" X 45'-0"	A572 GR65	1
2	12899-00200-TS	TOP STRAP, 15 3/8" X 2" X 3/16"	A572 GR65	1
3	12899-00200-CP	COVER PLATE, Ø17 9/16" X 3/16"	A572 GR65	1
4	12899-00200-VS201	VANG, OBROUND, 2-SIDED, 25 1/8" X 3" X 5/8"	A572 GR65	1
5	44018	WASHER, FLAT, 1/2", HDG, F436 T1	F436-T1	1
6	43029	NUT, HEX, 1/2-13, BLK, A563 DH	A563-DH	1
7	43026	NUT, HEAVY HEX, 1-8, A563 DH3	A563-DH3	4
8	43010	NUT, HEAVY HEX, 1/2-13, HDG, A563 DH	A563-DH	1
9	42120	BOLT, 1/2-13 X 1-3/4", HDG, HH, A307 A	A307-A	1
10	B22011	4X4 ID TAG, A588	A588	1

GREENVILLE UTILITIES STEEL STRUCTURES- NC
STR#: 45, S17-80'-0"
SEC WT: 2719 LBS
DOM: [mm/YYYY]
CHM-12899-00200
12899-00200-TOP

ID TAG

TEXT TO BE 7/16" LETTERS
TAGS TO BE ORIENTED ON 0° FLAT
WEIGHT ON ID TAG IS FINISHED GALV. WEIGHT

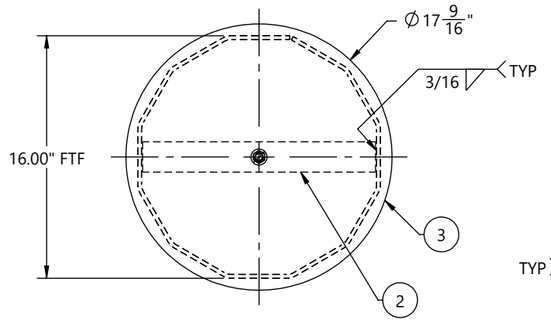

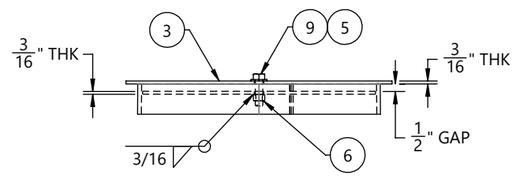

DETAIL A

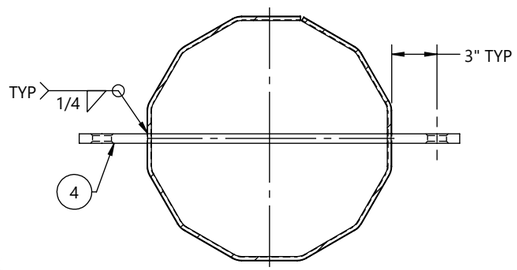

SECTION C-C

HOLE CHART		
HOLE SIZE (INCH)	DISTANCE FROM TOP OF SHAFT	FLAT(S)
13/16"	8' - 0"	3, 9
13/16"	9' - 0"	3, 9
13/16"	16' - 0"	3, 9
13/16"	17' - 0"	3, 9
13/16"	24' - 0"	3, 9
13/16"	25' - 0"	3, 9
11/16"	33' - 0"	6, 12
11/16"	34' - 0"	6, 12
11/16"	37' - 0"	6, 12
11/16"	38' - 0"	6, 12
11/16"	41' - 0"	6, 12
11/16"	42' - 0"	6, 12

CUSTOMER PLEASE VERIFY.
HOLES AT 41'-0", 42'-0" ELEVATIONS ARE FALLING IN BETWEEN SLIP JOINT, PLEASE SUGGEST.

BY	DATE
DRAWN: KB	06/29/2026
CHK'D: EV	06/29/2026

REV.	ECR #	DESCRIPTION	APPROVED BY	DATE
1		SUBMITTAL FOR APPROVAL	EV	07/20/2026

REVISIONS

CHM INDUSTRIES
700 E. McLEROY BLVD
SAGINAW, TEXAS 76179
682.286.0046 PH
682.286.0086 FX
CHMINDUSTRIES.COM

(SEE CHM IND., INC. PROCEDURE CHM-PR-1.7.3-F1 FOR STANDARD TOLERANCES)

QTY: 1 | GLM: (FT-K) 1296.11 | JOB NO. 12899 | PART NO. 12899-00200-TOP | DWG NO. 12899-00200

CUST NAME: GREENVILLE UTILITIES STEEL STRUCTURES- NC
STR #: 45 TYPE/CLASS-HEIGHT: S17-80'-0"
DESCRIPTION: TOP SECTION, 25.90" X 16.00" X 1/4" X 45'-0"

SCALE: NTS DO NOT SCALE DRAWING
REV. 1 | SHEET: 4 of 6

THIS DWG IS PROPERTY OF CHM INDUSTRIES AND CONTAINS PROPRIETARY INFORMATION WHICH MAY NOT BE COPIED OR REPRODUCED WITHOUT PRIOR WRITTEN CONSENT FROM CHM INDUSTRIES.

SEE GENERAL NOTES AND DETAILS SHEET FOR SUPPLEMENTARY INFORMATION

INDIVIDUAL STRUCTURE BILL OF MATERIALS			
ITEM NO.	PART NUMBER	DESCRIPTION	QTY.
1	12899-00200-BOT	BOTTOM SECTION, 31.78" X 29.91" X 5/16" X 8'-6"	1
1.1	12899-00200-SHB	SHAFT, 12S, 31.78" X 29.91" X 5/16" X 8'-6"	1
1.2	B22011	4X4 ID TAG, A588	1
1.3	43026	NUT, HEAVY HEX, 1-8, A563 DH3	4
1.4	ASSY-00200-CAS-SNG	SINGLE SECTION, 31.78" X 31.78" X 5/16" X 28'-0"	1
1.4.1	12899-00200-CAS-SHS	SHAFT, 12S, 31.78" X 31.78" X 5/16" X 28'-0"	1
1.4.2	12899-00200-CAS-SHG	GND SLV HALF, 12S, 32.16" X 32.16" X 3/16" X 4'-0"	2
1.4.3	12899-00200-PLT	SPLICE PLATE, Ø38 3/4" X 1"	1
1.5	12899-00200-EAR	DRIVING EAR, 1'-0" X 1'-4" X1"	2
1.6	43010	NUT, HEAVY HEX, 1/2-13, HDG, A563 DH	1
2	12899-00200-MID	MIDDLE SECTION, 31.65" X 24.45" X 5/16" X 32'-9"	1
2.1	12899-00200-SHM	SHAFT, 12S, 31.65" X 24.45" X 5/16" X 32'-9"	1
2.2	B22011	4X4 ID TAG, A588	1
2.3	43026	NUT, HEAVY HEX, 1-8, A563 DH3	8
2.4	43010	NUT, HEAVY HEX, 1/2-13, HDG, A563 DH	1
2.5	12899-00200-VS209	VANG, OBROUND, 2-SIDED, 34 15/16" X 3" X 5/8"	1
3	12899-00200-TOP	TOP SECTION, 25.90" X 16.00" X 1/4" X 45'-0"	1
3.1	12899-00200-SHT	SHAFT, 12S, 25.90" X 16.00" X 1/4" X 45'-0"	1
3.2	12899-00200-TS	TOP STRAP, 15 3/8" X 2" X 3/16"	1
3.3	12899-00200-VS201	VANG, OBROUND, 2-SIDED, 25 1/8" X 3" X 5/8"	1
3.4	B22011	4X4 ID TAG, A588	1
3.5	43026	NUT, HEAVY HEX, 1-8, A563 DH3	4
3.6	43010	NUT, HEAVY HEX, 1/2-13, HDG, A563 DH	1
3.7	43029	NUT, HEX, 1/2-13, BLK, A563 DH	1
3.8	12899-00200-CP	COVER PLATE, Ø17 9/16" X 3/16"	1
3.9	44018	WASHER, FLAT, 1/2", HDG, F436 T1	1
3.10	42120	BOLT, 1/2-13 X 1-3/4", HDG, HH, A307 A	1

BY		DATE
DRAWN:	KB	06/29/2026
CHK'D:	EV	06/29/2026

CHM INDUSTRIES
700 E. McLEROY BLVD
SAGINAW, TEXAS 76179
682.286.0046 PH
682.286.0086 FX
CHMINDUSTRIES.COM

(SEE CHM IND., INC. PROCEDURE CHM-PR-1.7.3-F1 FOR STANDARD TOLERANCES)

QTY: 1 | GLM: (FT-K) 1296.11 | JOB NO. 12899 | PART NO. 12899-00200-SBOM | DWG NO. 12899-00200

CUST NAME: GREENVILLE UTILITIES STEEL STRUCTURES- NC

STR #: 45 TYPE/CLASS-HEIGHT: S17-80'-0"

DESCRIPTION: STRUCTURE, 31.78" X 16.00" X 78'-0"

SCALE: NTS DO NOT SCALE DRAWING

REV. 1 | SHEET: 5 of 6

THIS DWG IS PROPERTY OF CHM INDUSTRIES AND CONTAINS PROPRIETARY INFORMATION WHICH MAY NOT BE COPIED OR REPRODUCED WITHOUT PRIOR WRITTEN CONSENT FROM CHM INDUSTRIES.

SEE GENERAL NOTES AND DETAILS SHEET FOR SUPPLEMENTARY INFORMATION

TOTAL JOB MATERIAL REQUIREMENTS				
ITEM NO.	PART NUMBER	DESCRIPTION	QTY.	JOB QTY.
1	42120	BOLT, 1/2-13 X 1-3/4", HDG, HH, A307 A	1	1
2	43026	NUT, HEAVY HEX, 1-8, A563 DH3	16	16
3	43029	NUT, HEX, 1/2-13, BLK, A563 DH	1	1
4	44018	WASHER, FLAT, 1/2", HDG, F436 T1	1	1
5	B22011	4X4 ID TAG, A588	3	3
6	12899-00200-VS209	VANG, OBROUND, 2-SIDED, 34 15/16" X 3" X 5/8"	1	1
7	12899-00200-CP	COVER PLATE, Ø17 9/16" X 3/16"	1	1
8	12899-00200-SHB	SHAFT, 12S, 31.78" X 29.91" X 5/16" X 8'-6"	1	1
9	12899-00200-SHM	SHAFT, 12S, 31.65" X 24.45" X 5/16" X 32'-9"	1	1
10	12899-00200-SHT	SHAFT, 12S, 25.90" X 16.00" X 1/4" X 45'-0"	1	1
11	12899-00200-TS	TOP STRAP, 15 3/8" X 2" X 3/16"	1	1
12	43010	NUT, HEAVY HEX, 1/2-13, HDG, A563 DH	3	3
13	12899-00200-VS201	VANG, OBROUND, 2-SIDED, 25 1/8" X 3" X 5/8"	1	1
14	12899-00200-CAS-SHS	SHAFT, 12S, 31.78" X 31.78" X 5/16" X 28'-0"	1	1
15	12899-00200-CAS-SHG	GND SLV HALF, 12S, 32.16" X 32.16" X 3/16" X 4'-0"	2	2
16	12899-00200-PLT	SPLICE PLATE, Ø38 3/4" X 1"	1	1
17	12899-00200-EAR	DRIVING EAR, 1'-0" X 1'-4" X1"	2	2

BY		DATE
DRAWN:	KB	06/29/2026
CHK'D:	EV	06/29/2026

CHM INDUSTRIES

700 E. McLEROY BLVD
SAGINAW, TEXAS 76179
682.286.0046 PH
682.286.0086 FX
CHMINDUSTRIES.COM

(SEE CHM IND., INC. PROCEDURE CHM-PR-1.7.3-F1 FOR STANDARD TOLERANCES)

QTY: 1 | GLM: (FT-K) 1296.11 | JOB NO. 12899 | PART NO. 12899-00200-PBOM | DWG NO. 12899-00200

CUST NAME: GREENVILLE UTILITIES STEEL STRUCTURES- NC

STR #: 45 TYPE/CLASS-HEIGHT: S17-80'-0"

DESCRIPTION: STRUCTURE, 31.78" X 16.00" X 78'-0"

SCALE: NTS
DO NOT SCALE DRAWING

REV: 1 | SHEET: 6 of 6

THIS DWG IS PROPERTY OF CHM INDUSTRIES AND CONTAINS PROPRIETARY INFORMATION WHICH MAY NOT BE COPIED OR REPRODUCED WITHOUT PRIOR WRITTEN CONSENT FROM CHM INDUSTRIES.

FINISH:	BLACK WEIGHT	GALVANIZED WEIGHT
GALVANIZED	6257 LBS	6632 LBS
WEIGHTS ABOVE INCLUDE ALL BOM ITEMS		

SEE GENERAL NOTES AND DETAILS SHEET FOR SUPPLEMENTARY INFORMATION

ITEM #	PART #	DESCRIPTION	QTY.
1	12899-00300-BOT	BOTTOM SECTION, 23.52" X 21.97" X 5/16" X 8'-6"	1
2	12899-00300-MID	MIDDLE SECTION, 23.42" X 16.74" X 1/4" X 36'-6"	1
3	12899-00300-TOP	TOP SECTION, 17.82" X 10.50" X 1/4" X 40'-0"	1

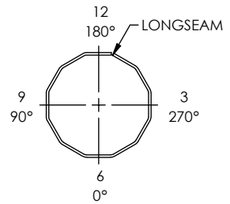

ORIENTATION DETAIL
TOP VIEW

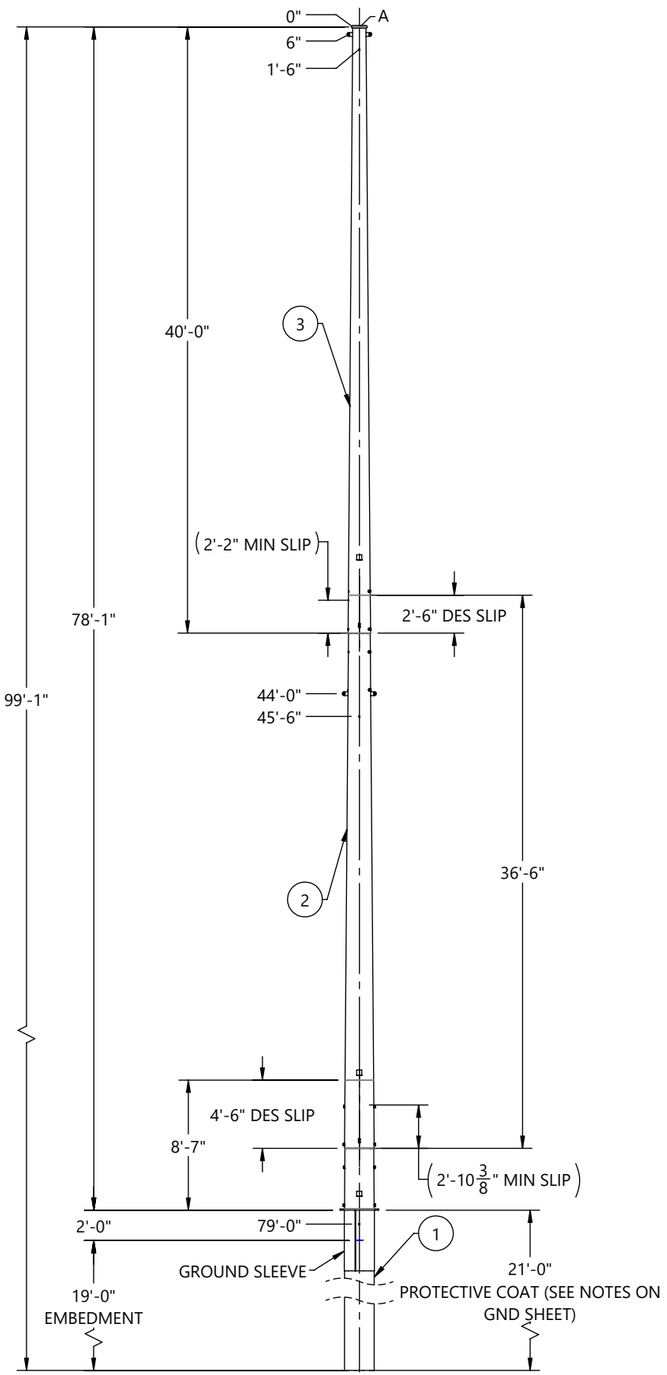

FRONT VIEW
(LOOKING @ 0° REF
ORIENTATION DETAIL)

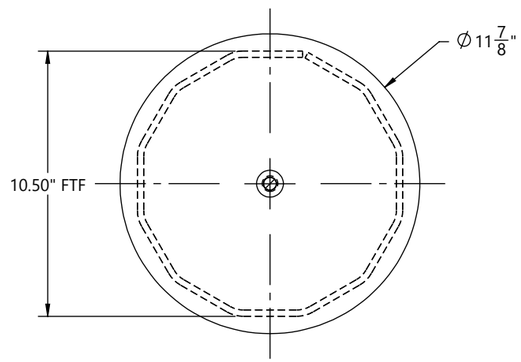

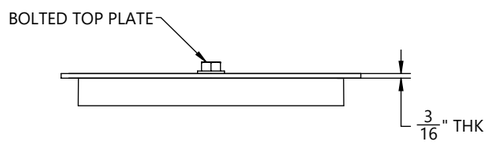

DETAIL A

HOLE CHART		
HOLE SIZE (INCH)	DISTANCE FROM TOP OF SHAFT	FLAT(S)
13/16"	8' - 0"	3, 9
13/16"	9' - 0"	3, 9
13/16"	14' - 0"	3, 9
13/16"	15' - 0"	3, 9
13/16"	20' - 0"	3, 9
13/16"	21' - 0"	3, 9
11/16"	29' - 0"	6, 12
11/16"	30' - 0"	6, 12
11/16"	33' - 0"	6, 12
11/16"	34' - 0"	6, 12
11/16"	37' - 0"	6, 12
11/16"	38' - 0"	6, 12

CUSTOMER PLEASE VERIFY
HOLES AT 37'-0" & 38'-0"
ELEVATIONS ARE FALLING
IN BETWEEN SLIP JOINT.
PLEASE SUGGEST.

BY		DATE
DRAWN:	MP	06/26/2026
CHK'D:	EV	06/26/2026

REV.	ECR #	DESCRIPTION	APPROVED BY	DATE
1		SUBMITTAL FOR APPROVAL	EV	07/17/2026

REVISIONS

CHM INDUSTRIES
700 E. McLEROY BLVD
SAGINAW, TEXAS 76179
682.286.0046 PH
682.286.0086 FX
CHMINDUSTRIES.COM

(SEE CHM IND., INC. PROCEDURE CHM-PR-1.7.3-F1 FOR STANDARD TOLERANCES)

QTY: 1 | GLM: (FT-K) 567.14 | JOB NO. 12899 | PART NO. 12899-00300-MN | DWG NO. 12899-00300

CUST NAME: GREENVILLE UTILITIES STEEL STRUCTURES-NC
STR #: 46 TYPE/CLASS-HEIGHT: S-07-4 - 80'-0"
DESCRIPTION: STRUCTURE, 23.52" X 10.50" X 78'-0"

SCALE: NTS
DO NOT SCALE DRAWING
REV. 1 | SHEET: 1 of 6

THIS DWG IS PROPERTY OF CHM INDUSTRIES AND CONTAINS PROPRIETARY INFORMATION WHICH MAY NOT BE COPIED OR REPRODUCED WITHOUT PRIOR WRITTEN CONSENT FROM CHM INDUSTRIES.

FINISH:	BLACK WEIGHT	GALVANIZED WEIGHT
GALVANIZED	2740 LBS	2904 LBS
WEIGHTS ABOVE INCLUDE ALL BOM ITEMS		

SEE GENERAL NOTES AND DETAILS SHEET FOR SUPPLEMENTARY INFORMATION

ITEM #	PART #	DESCRIPTION	MAT'L	QTY.
1	12899-00300-SHB	SHAFT, 12S, 23.52" X 21.97" X 5/16" X 8'-6"	A572 GR65	1
2	12899-00300-CAS-SHS	SHAFT, 12S, 23.52" X 23.52" X 5/16" X 21'-0"	A572 GR65	1
3	12899-00300-CAS-SHG	GND SLV HALF, 12S, 23.90" X 23.90" X 3/16" X 4'-0"	A572 GR65	2
4	12899-00300-PLT	SPLICE PLATE, Ø30 1/2" X 1"	A572 GR65	1
5	12899-00300-EAR	DRIVING EAR, 1'-0" X 1'-1 1/8" X1"	A572 GR65	2
6	B22011	4X4 ID TAG, A588	A588	1
7	43026	NUT, HEAVY HEX, 1-8, A563 DH3	A563-DH3	4
8	43010	NUT, HEAVY HEX, 1/2-13, HDG, A563 DH	A563-DH	1

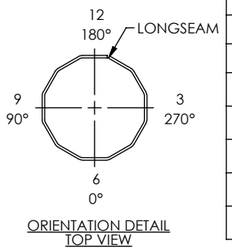

ORIENTATION DETAIL
TOP VIEW

GREENVILLE UTILITIES STEEL STRUCTURES-NC
STR#: 46, S-07-4 - 80'-0"
GLM: 567.14 FT-K
STR WT: 6632 LBS
SEC WT: 2904 LBS
DOM: [mm/YYYY]
CHM-12899-00300
12899-00300-BOT

ID TAG

TEXT TO BE 7/16" LETTERS
TAGS TO BE ORIENTED ON 0° FLAT
WEIGHT ON ID TAG IS FINISHED GALV. WEIGHT

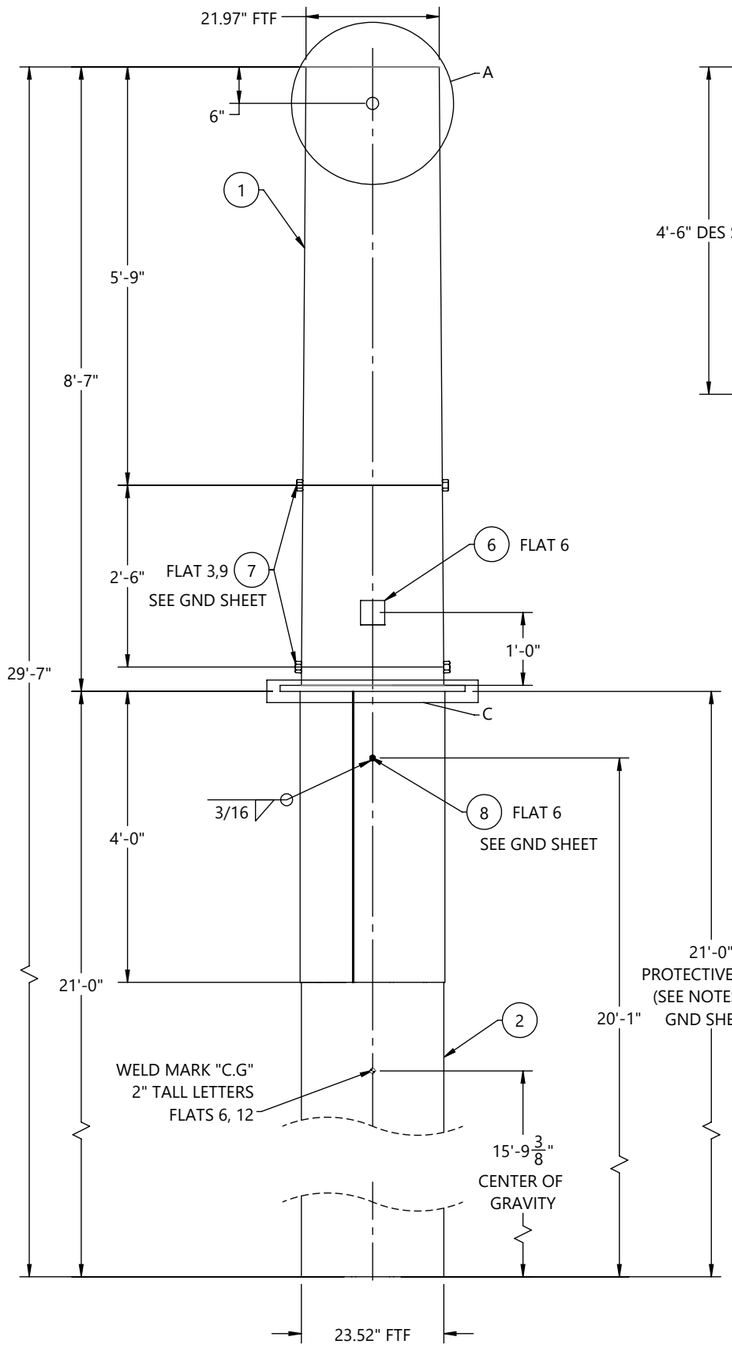

FRONT VIEW
(LOOKING @ 0° REF
ORIENTATION DETAIL)

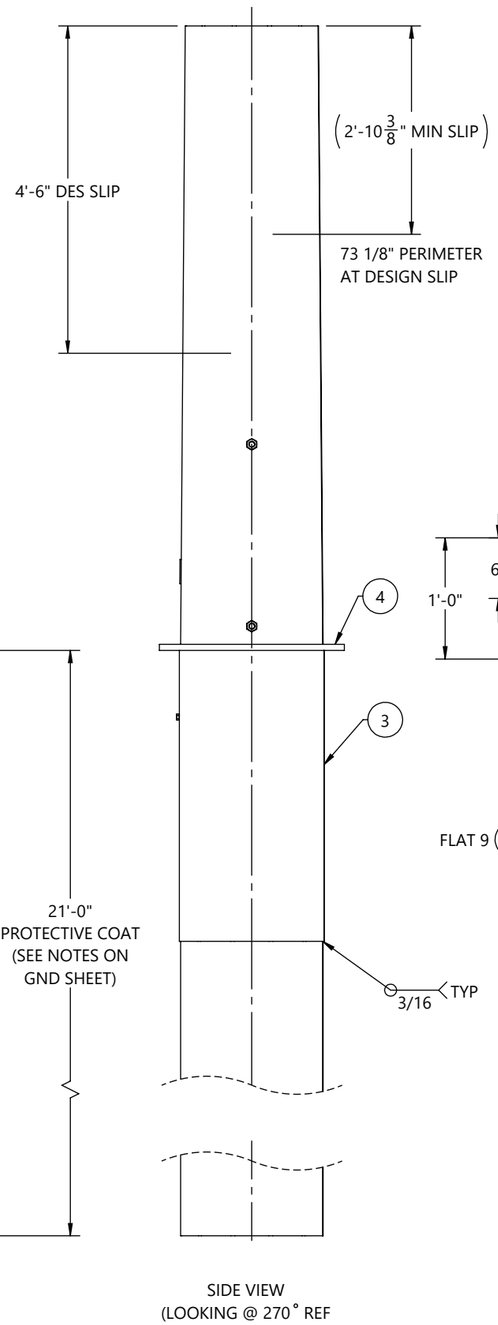

SIDE VIEW
(LOOKING @ 270° REF
ORIENTATION DETAIL)

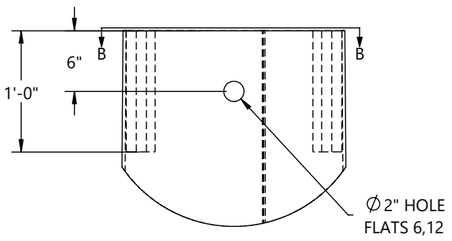

DETAIL A

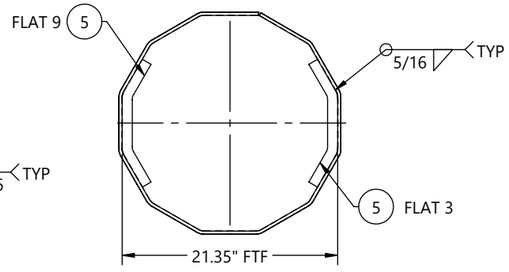

SECTION B-B

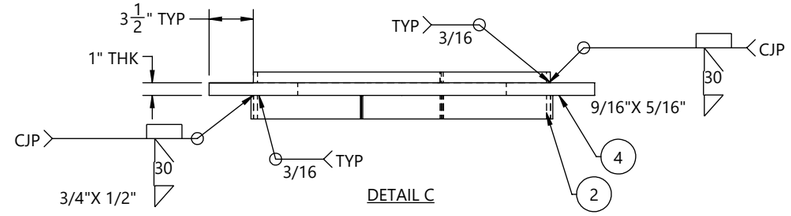

DETAIL C

1		SUBMITTAL FOR APPROVAL	EV	07/17/2026
REV.	ECR #	DESCRIPTION	APPROVED BY	DATE

REVISIONS

BY		DATE
DRAWN:	MP	06/26/2026
CHK'D:	EV	06/26/2026

CHM INDUSTRIES
700 E. McLEROY BLVD
SAGINAW, TEXAS 76179
682.286.0046 PH
682.286.0086 FX
CHMINDUSTRIES.COM

(SEE CHM IND., INC. PROCEDURE CHM-PR-1.7.3-F1 FOR STANDARD TOLERANCES)

QTY: 1	GLM: (FT-K) 567.14	JOB NO. 12899	PART NO. 12899-00300-BOT	DWG NO. 12899-00300

CUST NAME: GREENVILLE UTILITIES STEEL STRUCTURES-NC
STR #: 46 TYPE/CLASS-HEIGHT: S-07-4 - 80'-0"
DESCRIPTION: BOTTOM SECTION, 23.52" X 21.97" X 5/16" X 8'-6"

SCALE: NTS DO NOT SCALE DRAWING
REV.: 1 SHEET: 2 of 6

THIS DWG IS PROPERTY OF CHM INDUSTRIES AND CONTAINS PROPRIETARY INFORMATION WHICH MAY NOT BE COPIED OR REPRODUCED WITHOUT PRIOR WRITTEN CONSENT FROM CHM INDUSTRIES.

FINISH:	BLACK WEIGHT	GALVANIZED WEIGHT
GALVANIZED	1987 LBS	2106 LBS
WEIGHTS ABOVE INCLUDE ALL BOM ITEMS		

SEE GENERAL NOTES AND DETAILS SHEET FOR SUPPLEMENTARY INFORMATION

ITEM #	PART #	DESCRIPTION	MAT'L	QTY.
1	12899-00300-SHM	SHAFT, 12S, 23.42" X 16.74" X 1/4" X 36'-6"	A572 GR65	1
2	12899-00300-VS202	VANG, OBROUND, 2-SIDED, 27" X 3" X 5/8"	A572 GR65	1
3	43026	NUT, HEAVY HEX, 1-8, A563 DH3	A563-DH3	8
4	43010	NUT, HEAVY HEX, 1/2-13, HDG, A563 DH	A563-DH	1
5	B22011	4X4 ID TAG, A588	A588	1

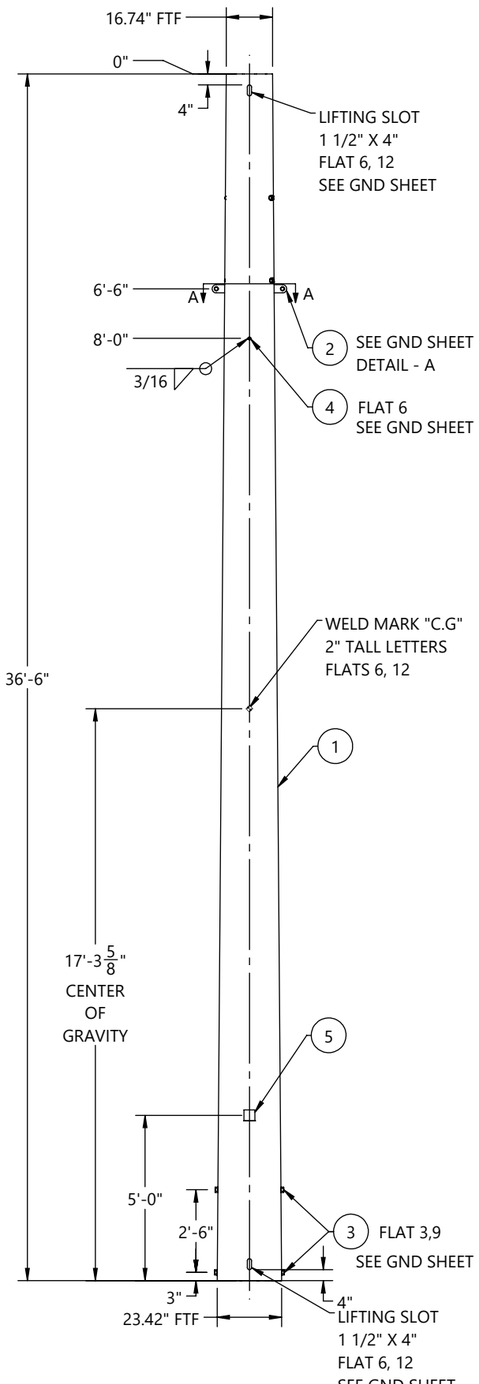

FRONT VIEW
(LOOKING @ 0° REF
ORIENTATION DETAIL)

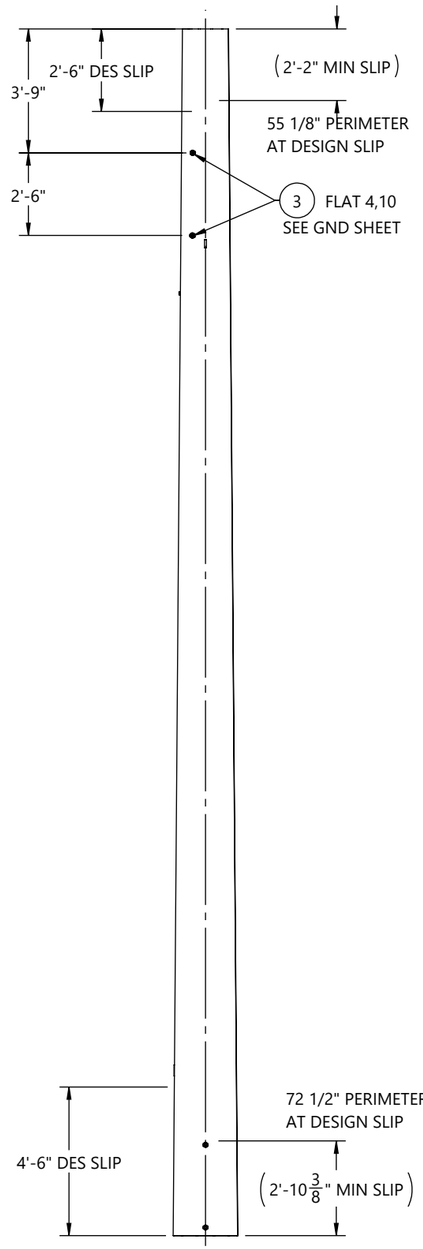

SIDE VIEW
(LOOKING @ 270° REF
ORIENTATION DETAIL)

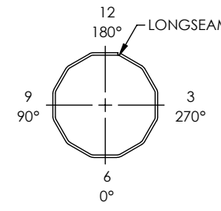

ORIENTATION DETAIL
TOP VIEW

GREENVILLE UTILITIES STEEL STRUCTURES-NC
STR#: 46, S-07-4 - 80'-0"
SEC WT: 2106 LBS
DOM: [mm/YYYY]
CHM-12899-00300
12899-00300-MID

ID TAG

TEXT TO BE 7/16" LETTERS
TAGS TO BE ORIENTED ON 0° FLAT
WEIGHT ON ID TAG IS FINISHED GALV. WEIGHT

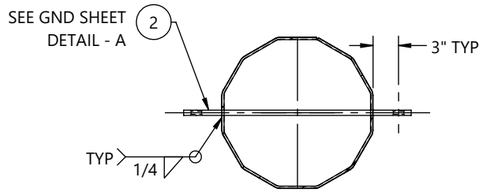

SECTION A-A

BY	DATE
DRAWN: MP	06/26/2026
CHK'D: EV	06/26/2026

REV.	ECR #	DESCRIPTION	APPROVED BY	DATE
1		SUBMITTAL FOR APPROVAL	EV	07/17/2026

REVISIONS

CHM INDUSTRIES
700 E. McLEROY BLVD
SAGINAW, TEXAS 76179
682.286.0046 PH
682.286.0086 FX
CHMINDUSTRIES.COM

(SEE CHM IND., INC. PROCEDURE CHM-PR-1.7.3-F1 FOR STANDARD TOLERANCES)

QTY: 1 | GLM: (FT-K) 567.14 | JOB NO. 12899 | PART NO. 12899-00300-MID | DWG NO. 12899-00300

CUST NAME: GREENVILLE UTILITIES STEEL STRUCTURES-NC
STR #: 46 TYPE/CLASS-HEIGHT: S-07-4 - 80'-0"
DESCRIPTION: MIDDLE SECTION, 23.42" X 16.74" X 1/4" X 36'-6"

SCALE: NTS DO NOT SCALE DRAWING
REV.: 1 SHEET: 3 of 6

THIS DWG IS PROPERTY OF CHM INDUSTRIES AND CONTAINS PROPRIETARY INFORMATION WHICH MAY NOT BE COPIED OR REPRODUCED WITHOUT PRIOR WRITTEN CONSENT FROM CHM INDUSTRIES.

FINISH:	BLACK WEIGHT	GALVANIZED WEIGHT
GALVANIZED	1530 LBS	1622 LBS
WEIGHTS ABOVE INCLUDE ALL BOM ITEMS		

SEE GENERAL NOTES AND DETAILS SHEET FOR SUPPLEMENTARY INFORMATION

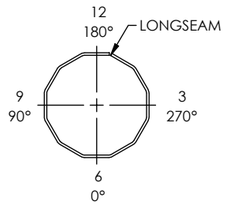

ORIENTATION DETAIL
TOP VIEW

ITEM #	PART #	DESCRIPTION	MAT'L	QTY.
1	12899-00300-SHT	SHAFT, 12S, 17.82" X 10.50" X 1/4" X 40'-0"	A572 GR65	1
2	12899-00300-TS	TOP STRAP, 9 7/8" X 2" X 3/16"	A572 GR65	1
3	12899-00300-VS201	VANG, OBROUND, 2-SIDED, 19 9/16" X 3" X 5/8"	A572 GR65	1
4	12899-00300-CP	COVER PLATE, Ø11 7/8" X 3/16"	A572 GR65	1
5	42120	BOLT, 1/2-13 X 1-3/4", HDG, HH, A307 A	A307-A	1
6	44018	WASHER, FLAT, 1/2", HDG, F436 T1	F436-T1	1
7	43010	NUT, HEAVY HEX, 1/2-13, HDG, A563 DH	A563-DH	1
8	43026	NUT, HEAVY HEX, 1-8, A563 DH3	A563-DH3	4
9	43029	NUT, HEX, 1/2-13, BLK, A563 DH	A563-DH	1
10	B22011	4X4 ID TAG, A588	A588	1

GREENVILLE UTILITIES STEEL STRUCTURES-NC
STR#: 46, S-07-4 - 80'-0"
SEC WT: 1622 LBS
DOM: [mm/YYYY]
CHM-12899-00300
12899-00300-TOP

ID TAG

TEXT TO BE 7/16" LETTERS
TAGS TO BE ORIENTED ON 0° FLAT
WEIGHT ON ID TAG IS FINISHED GALV. WEIGHT

HOLE CHART		
HOLE SIZE (INCH)	DISTANCE FROM TOP OF SHAFT	FLAT(S)
13/16"	8' - 0"	3, 9
13/16"	9' - 0"	3, 9
13/16"	14' - 0"	3, 9
13/16"	15' - 0"	3, 9
13/16"	20' - 0"	3, 9
13/16"	21' - 0"	3, 9
11/16"	29' - 0"	6,12
11/16"	30' - 0"	6,12
11/16"	33' - 0"	6,12
11/16"	34' - 0"	6,12
11/16"	37' - 0"	6,12
11/16"	38' - 0"	6,12

CUSTOMER PLEASE VERIFY HOLES AT 37'-0" & 38'-0" ELEVATIONS ARE FALLING IN BETWEEN SLIP JOINT. PLEASE SUGGEST.

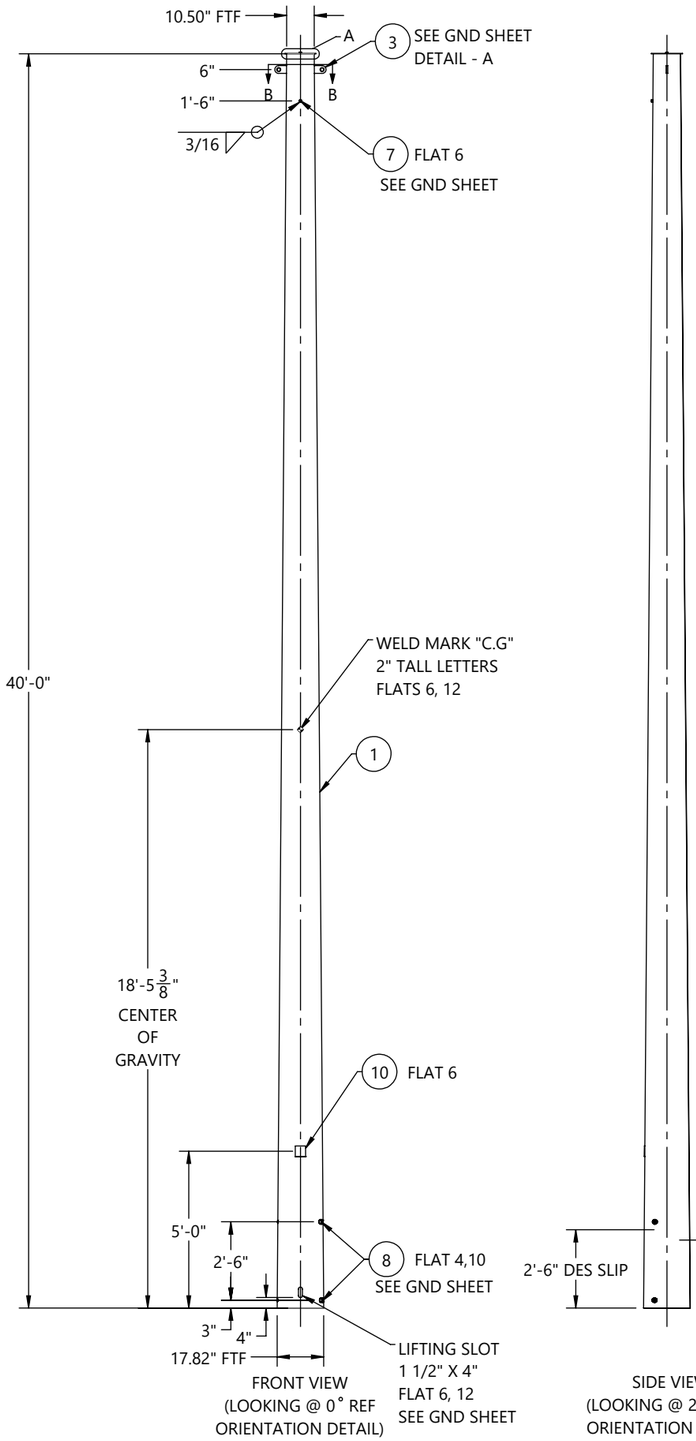

FRONT VIEW
(LOOKING @ 0° REF
ORIENTATION DETAIL)

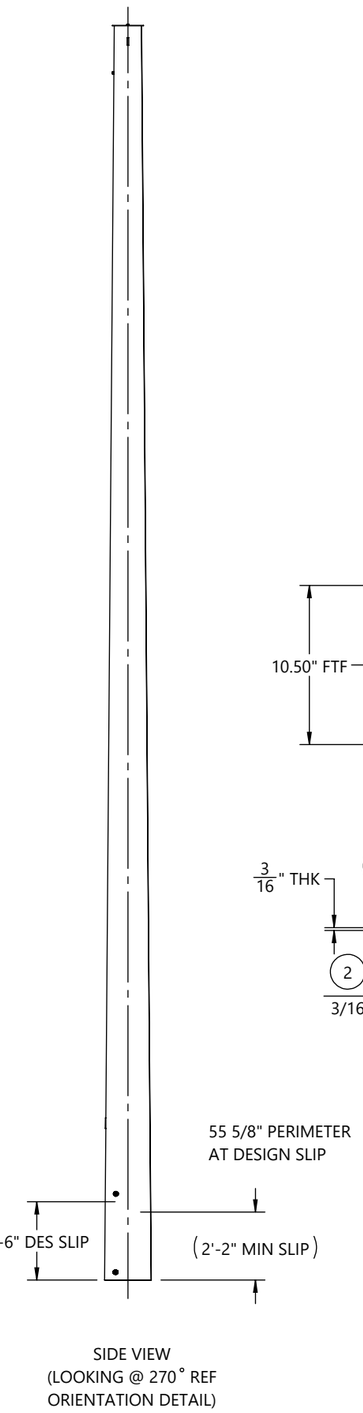

SIDE VIEW
(LOOKING @ 270° REF
ORIENTATION DETAIL)

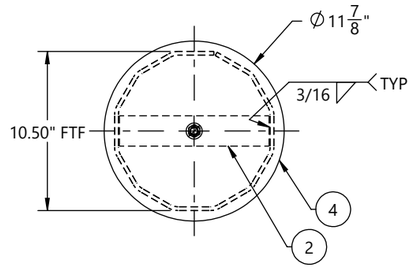

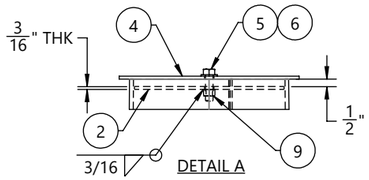

DETAIL A

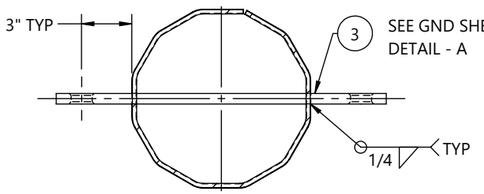

SECTION B-B

BY	DATE
DRAWN: MP	06/26/2026
CHK'D: EV	06/26/2026

REV.	ECR #	DESCRIPTION	APPROVED BY	DATE
1		SUBMITTAL FOR APPROVAL	EV	07/17/2026

REVISIONS

CHM INDUSTRIES
700 E. McLEROY BLVD
SAGINAW, TEXAS 76179
682.286.0046 PH
682.286.0086 FX
CHMINDUSTRIES.COM

(SEE CHM IND., INC. PROCEDURE CHM-PR-1.7.3-F1 FOR STANDARD TOLERANCES)

QTY: 1 | GLM: (FT-K) 567.14 | JOB NO. 12899 | PART NO. 12899-00300-TOP | DWG NO. 12899-00300

CUST NAME: GREENVILLE UTILITIES STEEL STRUCTURES-NC
STR #: 46 TYPE/CLASS-HEIGHT: S-07-4 - 80'-0"
DESCRIPTION: TOP SECTION, 17.82" X 10.50" X 1/4" X 40'-0"

SCALE: NTS DO NOT SCALE DRAWING
REV: 1 SHEET: 4 of 6

THIS DWG IS PROPERTY OF CHM INDUSTRIES AND CONTAINS PROPRIETARY INFORMATION WHICH MAY NOT BE COPIED OR REPRODUCED WITHOUT PRIOR WRITTEN CONSENT FROM CHM INDUSTRIES.

SEE GENERAL NOTES AND DETAILS SHEET FOR SUPPLEMENTARY INFORMATION

INDIVIDUAL STRUCTURE BILL OF MATERIALS			
ITEM NO.	PART NUMBER	DESCRIPTION	QTY.
1	12899-00300-BOT	BOTTOM SECTION, 23.52" X 21.97" X 5/16" X 8'-6"	1
1.1	12899-00300-SHB	SHAFT, 12S, 23.52" X 21.97" X 5/16" X 8'-6"	1
1.2	B22011	4X4 ID TAG, A588	1
1.3	43026	NUT, HEAVY HEX, 1-8, A563 DH3	4
1.4	ASSY-00300-CAS-SNG	SINGLE SECTION, 23.52" X 23.52" X 5/16" X 21'-0"	1
1.4.1	12899-00300-CAS-SHS	SHAFT, 12S, 23.52" X 23.52" X 5/16" X 21'-0"	1
1.4.2	12899-00300-CAS-SHG	GND SLV HALF, 12S, 23.90" X 23.90" X 3/16" X 4'-0"	2
1.4.3	12899-00300-PLT	SPLICE PLATE, Ø30 1/2" X 1"	1
1.5	12899-00300-EAR	DRIVING EAR, 1'-0" X 1'-1 1/8" X1"	2
1.6	43010	NUT, HEAVY HEX, 1/2-13, HDG, A563 DH	1
2	12899-00300-MID	MIDDLE SECTION, 23.42" X 16.74" X 1/4" X 36'-6"	1
2.1	12899-00300-SHM	SHAFT, 12S, 23.42" X 16.74" X 1/4" X 36'-6"	1
2.2	B22011	4X4 ID TAG, A588	1
2.3	43026	NUT, HEAVY HEX, 1-8, A563 DH3	8
2.4	12899-00300-VS202	VANG, OBROUND, 2-SIDED, 27" X 3" X 5/8"	1
2.5	43010	NUT, HEAVY HEX, 1/2-13, HDG, A563 DH	1
3	12899-00300-TOP	TOP SECTION, 17.82" X 10.50" X 1/4" X 40'-0"	1
3.1	12899-00300-SHT	SHAFT, 12S, 17.82" X 10.50" X 1/4" X 40'-0"	1
3.2	12899-00300-TS	TOP STRAP, 9 7/8" X 2" X 3/16"	1
3.3	12899-00300-VS201	VANG, OBROUND, 2-SIDED, 19 9/16" X 3" X 5/8"	1
3.4	B22011	4X4 ID TAG, A588	1
3.5	43026	NUT, HEAVY HEX, 1-8, A563 DH3	4
3.6	43010	NUT, HEAVY HEX, 1/2-13, HDG, A563 DH	1
3.7	43029	NUT, HEX, 1/2-13, BLK, A563 DH	1
3.8	12899-00300-CP	COVER PLATE, Ø11 7/8" X 3/16"	1
3.9	44018	WASHER, FLAT, 1/2", HDG, F436 T1	1
3.10	42120	BOLT, 1/2-13 X 1-3/4", HDG, HH, A307 A	1

BY		DATE
DRAWN:	MP	06/26/2026
CHK'D:	EV	06/26/2026

CHM INDUSTRIES
700 E. McLEROY BLVD
SAGINAW, TEXAS 76179
682.286.0046 PH
682.286.0086 FX
CHMINDUSTRIES.COM

(SEE CHM IND., INC. PROCEDURE CHM-PR-1.7.3-F1 FOR STANDARD TOLERANCES)

QTY: 1 | GLM: (FT-K) 567.14 | JOB NO. 12899 | PART NO. 12899-00300-SBOM | DWG NO. 12899-00300

CUST NAME: GREENVILLE UTILITIES STEEL STRUCTURES-NC

STR #: 46 TYPE/CLASS-HEIGHT: S-07-4 - 80'-0"

DESCRIPTION: STRUCTURE, 23.52" X 10.50" X 78'-0"

SCALE: NTS DO NOT SCALE DRAWING

REV. 1 | SHEET: 5 of 6

THIS DWG IS PROPERTY OF CHM INDUSTRIES AND CONTAINS PROPRIETARY INFORMATION WHICH MAY NOT BE COPIED OR REPRODUCED WITHOUT PRIOR WRITTEN CONSENT FROM CHM INDUSTRIES.

SEE GENERAL NOTES AND DETAILS SHEET FOR SUPPLEMENTARY INFORMATION

TOTAL JOB MATERIAL REQUIREMENTS				
ITEM NO.	PART NUMBER	DESCRIPTION	QTY.	JOB QTY.
1	42120	BOLT, 1/2-13 X 1-3/4", HDG, HH, A307 A	1	1
2	43026	NUT, HEAVY HEX, 1-8, A563 DH3	16	16
3	43029	NUT, HEX, 1/2-13, BLK, A563 DH	1	1
4	44018	WASHER, FLAT, 1/2", HDG, F436 T1	1	1
5	B22011	4X4 ID TAG, A588	3	3
6	12899-00300-VS201	VANG, OBROUND, 2-SIDED, 19 9/16" X 3" X 5/8"	1	1
7	12899-00300-CP	COVER PLATE, Ø11 7/8" X 3/16"	1	1
8	12899-00300-SHB	SHAFT, 12S, 23.52" X 21.97" X 5/16" X 8'-6"	1	1
9	12899-00300-SHM	SHAFT, 12S, 23.42" X 16.74" X 1/4" X 36'-6"	1	1
10	12899-00300-SHT	SHAFT, 12S, 17.82" X 10.50" X 1/4" X 40'-0"	1	1
11	12899-00300-TS	TOP STRAP, 9 7/8" X 2" X 3/16"	1	1
12	12899-00300-VS202	VANG, OBROUND, 2-SIDED, 27" X 3" X 5/8"	1	1
13	43010	NUT, HEAVY HEX, 1/2-13, HDG, A563 DH	3	3
14	12899-00300-CAS-SHS	SHAFT, 12S, 23.52" X 23.52" X 5/16" X 21'-0"	1	1
15	12899-00300-CAS-SHG	GND SLV HALF, 12S, 23.90" X 23.90" X 3/16" X 4'-0"	2	2
16	12899-00300-PLT	SPLICE PLATE, Ø30 1/2" X 1"	1	1
17	12899-00300-EAR	DRIVING EAR, 1'-0" X 1'-1 1/8" X1"	2	2

BY	DATE
DRAWN: MP	06/26/2026
CHK'D: EV	06/26/2026

CHM INDUSTRIES
700 E. McLEROY BLVD
SAGINAW, TEXAS 76179
682.286.0046 PH
682.286.0086 FX
CHMINDUSTRIES.COM

(SEE CHM IND., INC. PROCEDURE CHM-PR-1.7.3-F1 FOR STANDARD TOLERANCES)

QTY: 1 | GLM: (FT-K) 567.14 | JOB NO. 12899 | PART NO. 12899-00300-PBOM | DWG NO. 12899-00300

CUST NAME: GREENVILLE UTILITIES STEEL STRUCTURES-NC

STR #: 46 TYPE/CLASS-HEIGHT: S-07-4 - 80'-0"

DESCRIPTION: STRUCTURE, 23.52" X 10.50" X 78'-0"

SCALE: NTS DO NOT SCALE DRAWING

REV: 1 SHEET: 6 of 6

THIS DWG IS PROPERTY OF CHM INDUSTRIES AND CONTAINS PROPRIETARY INFORMATION WHICH MAY NOT BE COPIED OR REPRODUCED WITHOUT PRIOR WRITTEN CONSENT FROM CHM INDUSTRIES.

FINISH:	BLACK WEIGHT	GALVANIZED WEIGHT
GALVANIZED	6727 LBS	7131 LBS
WEIGHTS ABOVE INCLUDE ALL BOM ITEMS		

SEE GENERAL NOTES AND DETAILS SHEET FOR SUPPLEMENTARY INFORMATION

ITEM #	PART #	DESCRIPTION	QTY.
1	12899-00400-BOT	BOTTOM SECTION, 24.44" X 22.88" X 5/16" X 8'-6"	1
2	12899-00400-MID	MIDDLE SECTION, 24.33 X 16.74 X 1/4" X 41'-6"	1
3	12899-00400-TOP	TOP SECTION, 17.82" X 10.50" X 1/4" X 40'-0"	1

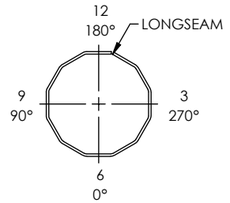

ORIENTATION DETAIL
TOP VIEW

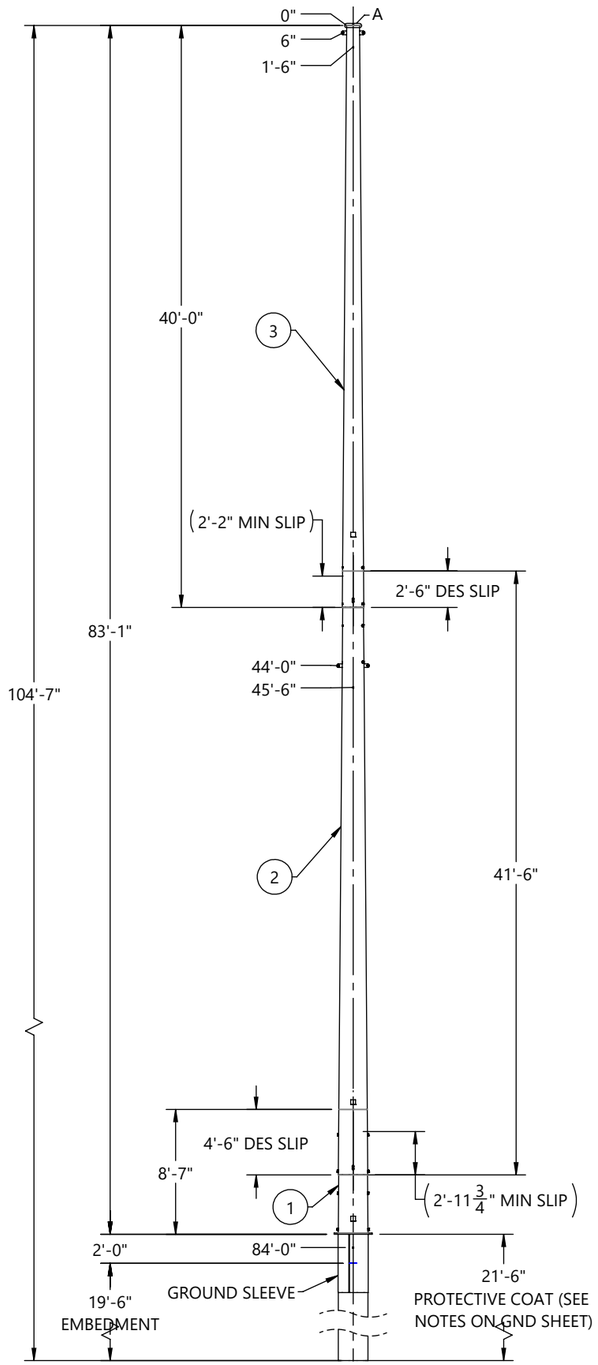

FRONT VIEW
(LOOKING @ 0° REF
ORIENTATION DETAIL)

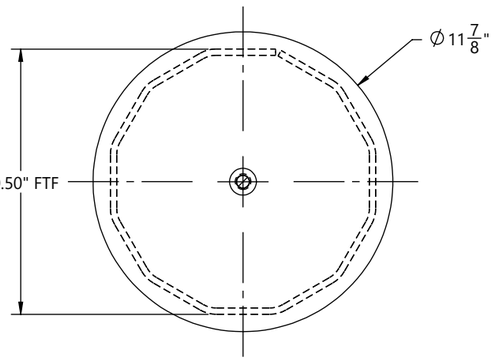

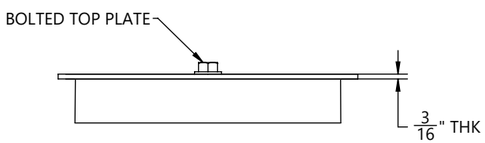

DETAIL A

HOLE CHART		
HOLE SIZE (INCH)	DISTANCE FROM TOP OF SHAFT	FLAT(S)
13/16"	8' - 0"	3, 9
13/16"	9' - 0"	3, 9
13/16"	14' - 0"	3, 9
13/16"	15' - 0"	3, 9
13/16"	20' - 0"	3, 9
13/16"	21' - 0"	3, 9
11/16"	29' - 0"	6, 12
11/16"	30' - 0"	6, 12
11/16"	33' - 0"	6, 12
11/16"	34' - 0"	6, 12
11/16"	37' - 0"	6, 12
11/16"	38' - 0"	6, 12

CUSTOMER PLEASE VERIFY
HOLES AT 37'-0" & 38'-0"
ELEVATIONS ARE FALLING
IN BETWEEN SLIP JOINT.
PLEASE SUGGEST.

BY		DATE
DRAWN:	MP	07/01/2026
CHK'D:	EV	07/01/2026

REV.	ECR #	DESCRIPTION	APPROVED BY	DATE
1		SUBMITTED FOR APPROVAL	EV	07/17/2026

REVISIONS

CHM INDUSTRIES
700 E. McLEROY BLVD
SAGINAW, TEXAS 76179
682.286.0046 PH
682.286.0086 FX
CHMINDUSTRIES.COM

(SEE CHM IND., INC. PROCEDURE CHM-PR-1.7.3-F1 FOR STANDARD TOLERANCES)

QTY: 1 | GLM: (FT-K) 605 | JOB NO. 12899 | PART NO. 12899-00400-MN | DWG NO. 12899-00400

CUST NAME: GREENVILLE UTILITIES STEEL STRUCTURES-NC

STR #: 46A TYPE/CLASS-HEIGHT: S-07.4 - 85'-0"

DESCRIPTION: STRUCTURE, 24.44" X 10.50" X 83'-0"

SCALE: NTS DO NOT SCALE DRAWING

REV. 1 | SHEET: 1 of 6

THIS DWG IS PROPERTY OF CHM INDUSTRIES AND CONTAINS PROPRIETARY INFORMATION WHICH MAY NOT BE COPIED OR REPRODUCED WITHOUT PRIOR WRITTEN CONSENT FROM CHM INDUSTRIES.

FINISH:	BLACK WEIGHT	GALVANIZED WEIGHT
GALVANIZED	2889 LBS	3062 LBS
WEIGHTS ABOVE INCLUDE ALL BOM ITEMS		

SEE GENERAL NOTES AND DETAILS SHEET FOR SUPPLEMENTARY INFORMATION

ITEM #	PART #	DESCRIPTION	MAT'L	QTY.
1	12899-00400-SHB	SHAFT, 12S, 24.44" X 22.88" X 5/16" X 8'-6"	A572 GR65	1
2	12899-00400-CAS-SHS	SHAFT, 12S, 24.44" X 24.44" X 5/16" X 21'-6"	A572 GR65	1
3	12899-00400-CAS-SHG	GND SLV HALF, 12S, 24.82" X 24.82" X 3/16" X 4'-0"	A572 GR65	2
4	12899-00400-PLT	SPLICE PLATE, Ø31 7/16" X 1"	A572 GR65	1
5	12899-00400-EAR	DRIVING EAR, 1'-0" X 1'-1 1/8" X1"	A572 GR65	2
6	43026	NUT, HEAVY HEX, 1-8, A563 DH3	A563-DH3	4
7	43010	NUT, HEAVY HEX, 1/2-13, HDG, A563 DH	A563-DH	1
8	B22011	4X4 ID TAG, A588	A588	1

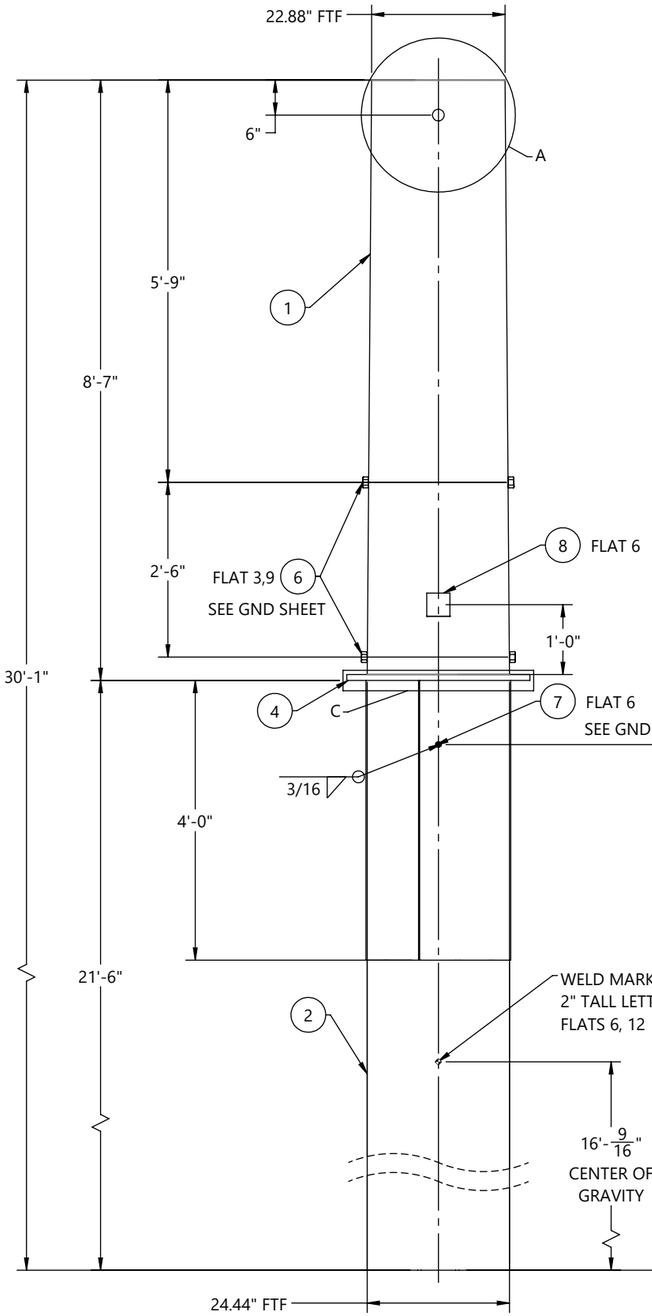

FRONT VIEW
(LOOKING @ 0° REF
ORIENTATION DETAIL)

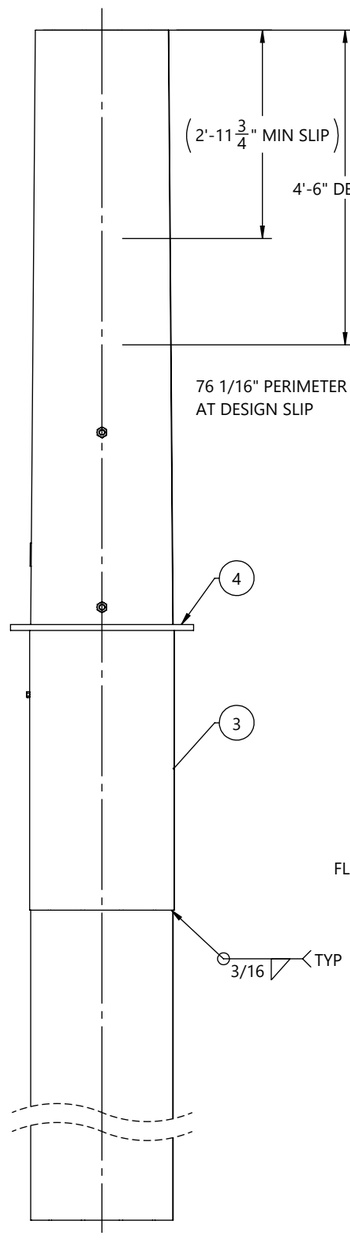

SIDE VIEW
(LOOKING @ 270° REF
ORIENTATION DETAIL)

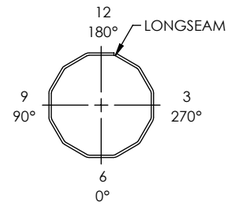

ORIENTATION DETAIL
TOP VIEW

GREENVILLE UTILITIES STEEL STRUCTURES-NC
STR#: 46A, S-07.4 - 85'-0"
GLM: 605 FT-K
STR WT: 7131 LBS
SEC WT: 3062 LBS
DOM: [mm/YYYY]
CHM-12899-00400
12899-00400-BOT

ID TAG

TEXT TO BE 7/16" LETTERS
TAGS TO BE ORIENTED ON 0° FLAT
WEIGHT ON ID TAG IS FINISHED GALV. WEIGHT

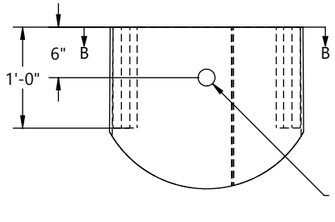

DETAIL A

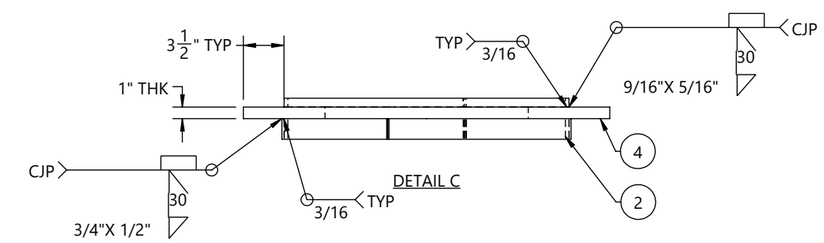

DETAIL C

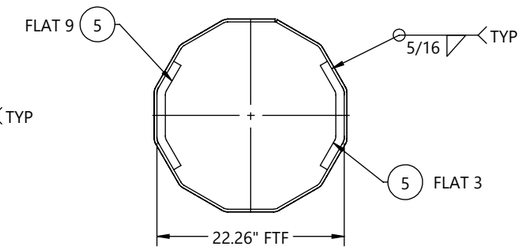

SECTION B-B

REV.	ECR #	DESCRIPTION	APPROVED BY	DATE
1		SUBMITTED FOR APPROVAL	EV	07/17/2026

REVISIONS

BY	DATE
DRAWN: MP	07/01/2026
CHK'D: EV	07/01/2026

CHM INDUSTRIES
700 E. McLEROY BLVD
SAGINAW, TEXAS 76179
682.286.0046 PH
682.286.0086 FX
CHMINDUSTRIES.COM

(SEE CHM IND., INC. PROCEDURE CHM-PR-1.7.3-F1 FOR STANDARD TOLERANCES)

QTY: 1 | GLM: (FT-K) 605 | JOB NO. 12899 | PART NO. 12899-00400-BOT | DWG NO. 12899-00400

CUST NAME: GREENVILLE UTILITIES STEEL STRUCTURES-NC
STR #: 46A TYPE/CLASS-HEIGHT: S-07.4 - 85'-0"
DESCRIPTION: BOTTOM SECTION, 24.44" X 22.88" X 5/16" X 8'-6"

SCALE: NTS
DO NOT SCALE DRAWING
REV.: 1 | SHEET: 2 of 6

THIS DWG IS PROPERTY OF CHM INDUSTRIES AND CONTAINS PROPRIETARY INFORMATION WHICH MAY NOT BE COPIED OR REPRODUCED WITHOUT PRIOR WRITTEN CONSENT FROM CHM INDUSTRIES.

FINISH:	BLACK WEIGHT	GALVANIZED WEIGHT
GALVANIZED	2308 LBS	2446 LBS
WEIGHTS ABOVE INCLUDE ALL BOM ITEMS		

SEE GENERAL NOTES AND DETAILS SHEET FOR SUPPLEMENTARY INFORMATION

ITEM #	PART #	DESCRIPTION	MAT'L	QTY.
1	12899-00400-SHM	SHAFT, 12S, 24.33" X 16.74" X 1/4" X 41'-6"	A572 GR65	1
2	12899-00400-VS202	VANG, OBROUND, 2-SIDED, 27" X 3" X 5/8"	A572 GR65	1
3	43026	NUT, HEAVY HEX, 1-8, A563 DH3	A563-DH3	8
4	43010	NUT, HEAVY HEX, 1/2-13, HDG, A563 DH	A563-DH	1
5	B22011	4X4 ID TAG, A588	A588	1

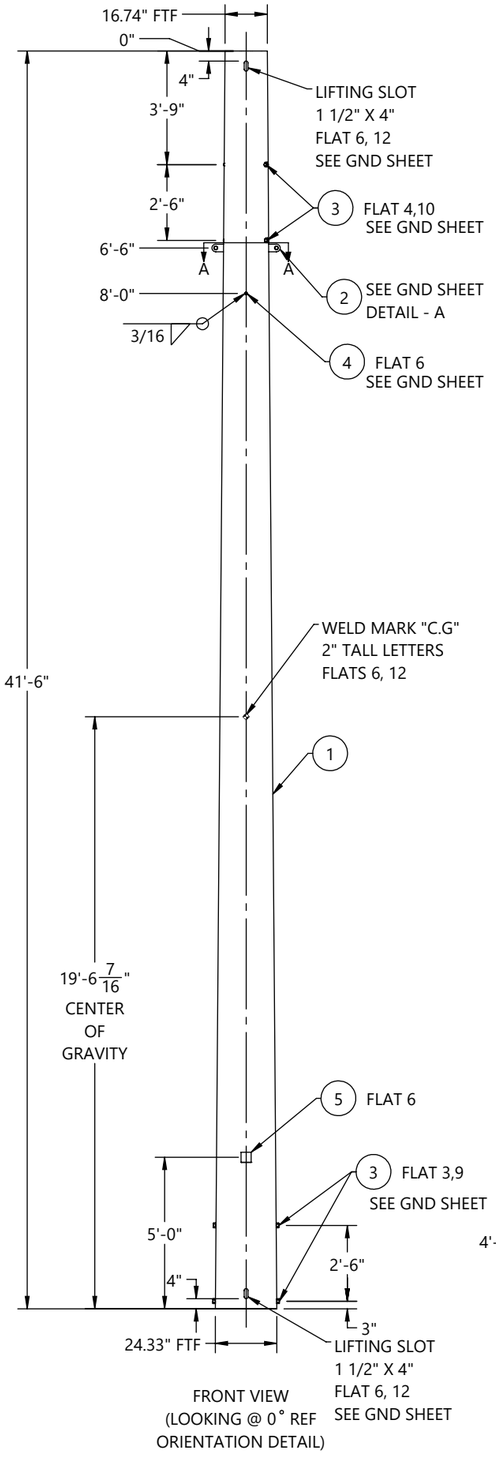

FRONT VIEW
(LOOKING @ 0° REF
ORIENTATION DETAIL)

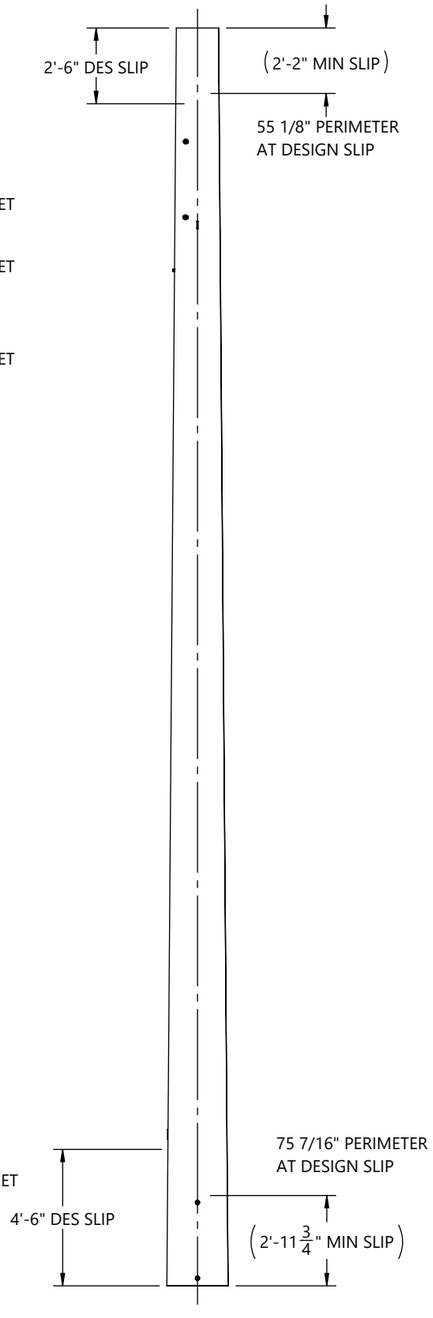

SIDE VIEW
(LOOKING @ 270° REF
ORIENTATION DETAIL)

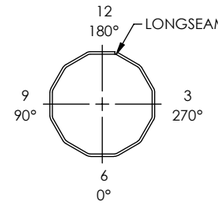

ORIENTATION DETAIL
TOP VIEW

GREENVILLE UTILITIES STEEL STRUCTURES-NC
STR#: 46A, S-07.4 - 85'-0"
SEC WT: 2446 LBS
DOM: [mm/YYYY]
CHM-12899-00400
12899-00400-MID

ID TAG

TEXT TO BE 7/16" LETTERS
TAGS TO BE ORIENTED ON 0° FLAT
WEIGHT ON ID TAG IS FINISHED GALV. WEIGHT

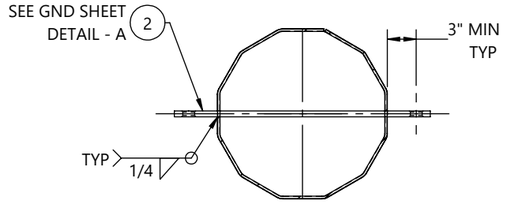

SECTION A-A

BY	DATE
DRAWN: MP	07/01/2026
CHK'D: EV	07/01/2026

REV.	ECR #	DESCRIPTION	APPROVED BY	DATE
1		SUBMITTED FOR APPROVAL	EV	07/17/2026

REVISIONS

CHM INDUSTRIES
700 E. McLEROY BLVD
SAGINAW, TEXAS 76179
682.286.0046 PH
682.286.0086 FX
CHMINDUSTRIES.COM

(SEE CHM IND., INC. PROCEDURE CHM-PR-1.7.3-F1 FOR STANDARD TOLERANCES)

QTY: 1 | GLM: (FT-K) 605 | JOB NO. 12899 | PART NO. 12899-00400-MID | DWG NO. 12899-00400

CUST NAME: GREENVILLE UTILITIES STEEL STRUCTURES-NC
STR #: 46A TYPE/CLASS-HEIGHT: S-07.4 - 85'-0"
DESCRIPTION: MIDDLE SECTION, 24.33 X 16.74 X 1/4" X 41'-6"

SCALE: NTS
DO NOT SCALE DRAWING
REV. 1 | SHEET: 3 of 6

THIS DWG IS PROPERTY OF CHM INDUSTRIES AND CONTAINS PROPRIETARY INFORMATION WHICH MAY NOT BE COPIED OR REPRODUCED WITHOUT PRIOR WRITTEN CONSENT FROM CHM INDUSTRIES.

FINISH:	BLACK WEIGHT	GALVANIZED WEIGHT
GALVANIZED	1530 LBS	1622 LBS
WEIGHTS ABOVE INCLUDE ALL BOM ITEMS		

SEE GENERAL NOTES AND DETAILS SHEET FOR SUPPLEMENTARY INFORMATION

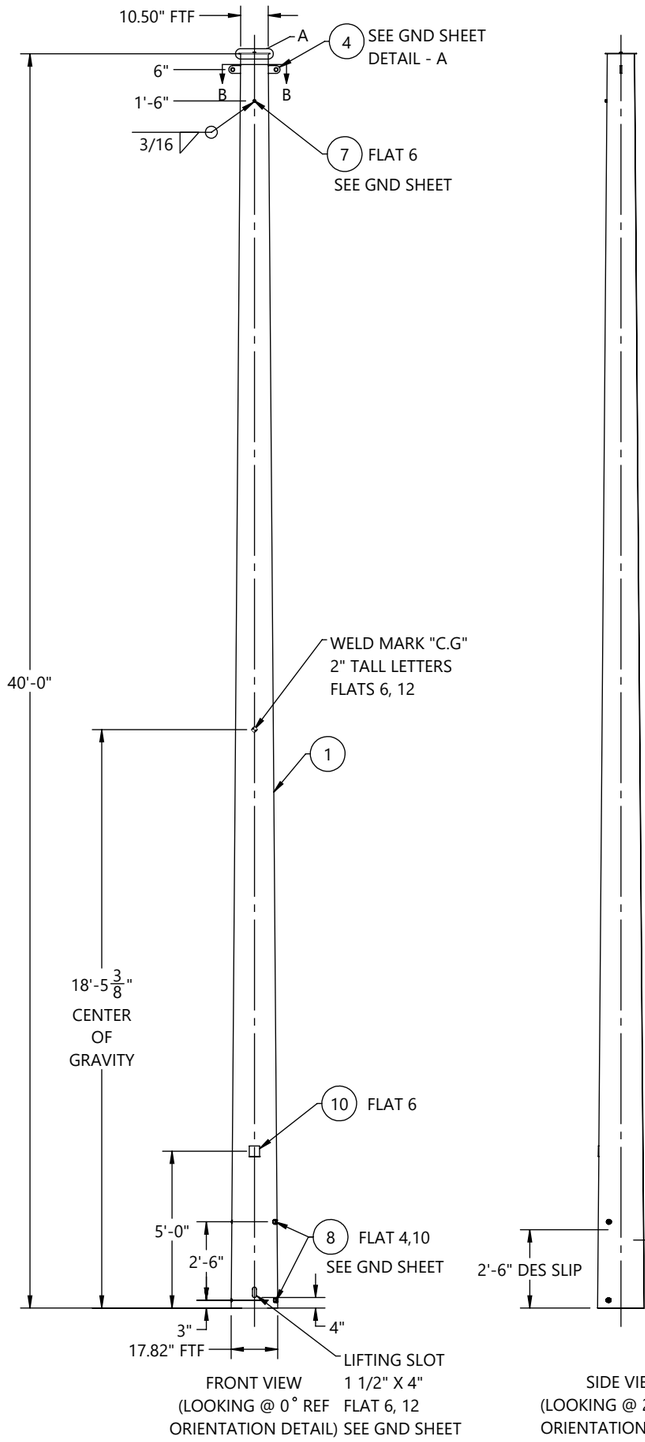

FRONT VIEW
(LOOKING @ 0° REF ORIENTATION DETAIL)

SIDE VIEW
(LOOKING @ 270° REF ORIENTATION DETAIL)

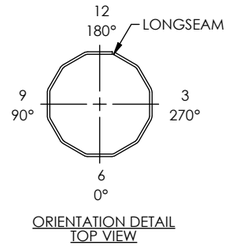

ORIENTATION DETAIL
TOP VIEW

ITEM #	PART #	DESCRIPTION	MAT'L	QTY.
1	12899-00400-SHT	SHAFT, 12S, 17.82" X 10.50" X 1/4" X 40'-0"	A572 GR65	1
2	12899-00400-TS	TOP STRAP, 9 7/8" X 2" X 3/16"	A572 GR65	1
3	12899-00400-CP	COVER PLATE, Ø11 7/8" X 3/16"	A572 GR65	1
4	12899-00400-VS201	VANG, OBROUND, 2-SIDED, 19 9/16" X 3" X 5/8"	A572 GR65	1
5	42120	BOLT, 1/2-13 X 1-3/4", HDG, HH, A307 A	A307-A	1
6	44018	WASHER, FLAT, 1/2", HDG, F436 T1	F436-T1	1
7	43010	NUT, HEAVY HEX, 1/2-13, HDG, A563 DH	A563-DH	1
8	43026	NUT, HEAVY HEX, 1-8, A563 DH3	A563-DH3	4
9	43029	NUT, HEX, 1/2-13, BLK, A563 DH	A563-DH	1
10	B22011	4X4 ID TAG, A588	A588	1

GREENVILLE UTILITIES STEEL STRUCTURES-NC
STR#: 46A, S-07.4 - 85'-0"
SEC WT: 1622 LBS
DOM: [mm/YYYY]
CHM-12899-00400
12899-00400-TOP

ID TAG

TEXT TO BE 7/16" LETTERS
TAGS TO BE ORIENTED ON 0° FLAT
WEIGHT ON ID TAG IS FINISHED GALV. WEIGHT

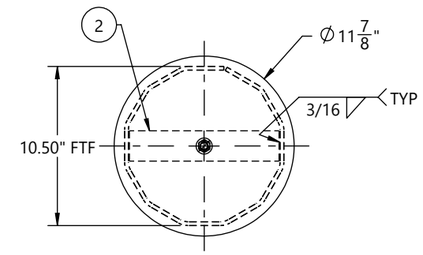

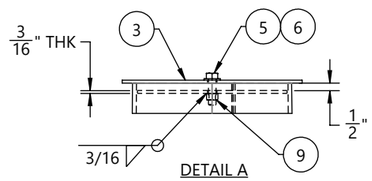

DETAIL A

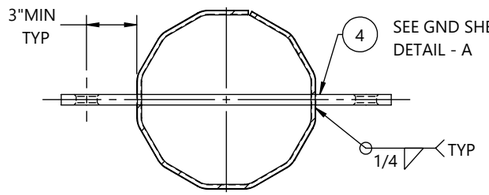

SECTION B-B

HOLE CHART		
HOLE SIZE (INCH)	DISTANCE FROM TOP OF SHAFT	FLAT(S)
13/16"	8' - 0"	3, 9
13/16"	9' - 0"	3, 9
13/16"	14' - 0"	3, 9
13/16"	15' - 0"	3, 9
13/16"	20' - 0"	3, 9
13/16"	21' - 0"	3, 9
11/16"	29' - 0"	6,12
11/16"	30' - 0"	6,12
11/16"	33' - 0"	6,12
11/16"	34' - 0"	6,12
11/16"	37' - 0"	6,12
11/16"	38' - 0"	6,12

CUSTOMER PLEASE VERIFY
HOLES AT 37'-0" & 38'-0"
ELEVATIONS ARE FALLING
IN BETWEEN SLIP JOINT.
PLEASE SUGGEST.

BY	DATE
DRAWN: MP	07/01/2026
CHK'D: EV	07/01/2026

REV.	ECR #	DESCRIPTION	APPROVED BY	DATE
1		SUBMITTED FOR APPROVAL	EV	07/17/2026

REVISIONS

CHM INDUSTRIES
700 E. McLEROY BLVD
SAGINAW, TEXAS 76179
682.286.0046 PH
682.286.0086 FX
CHMINDUSTRIES.COM

(SEE CHM IND., INC. PROCEDURE CHM-PR-1.7.3-F1 FOR STANDARD TOLERANCES)

QTY: 1 | GLM: (FT-K) 605 | JOB NO. 12899 | PART NO. 12899-00400-TOP | DWG NO. 12899-00400

CUST NAME: GREENVILLE UTILITIES STEEL STRUCTURES-NC
STR #: 46A TYPE/CLASS-HEIGHT: S-07.4 - 85'-0"
DESCRIPTION: TOP SECTION, 17.82" X 10.50" X 1/4" X 40'-0"

SCALE: NTS DO NOT SCALE DRAWING
REV. 1 | SHEET: 4 of 6

THIS DWG IS PROPERTY OF CHM INDUSTRIES AND CONTAINS PROPRIETARY INFORMATION WHICH MAY NOT BE COPIED OR REPRODUCED WITHOUT PRIOR WRITTEN CONSENT FROM CHM INDUSTRIES.

SEE GENERAL NOTES AND DETAILS SHEET FOR SUPPLEMENTARY INFORMATION

INDIVIDUAL STRUCTURE BILL OF MATERIALS			
ITEM NO.	PART NUMBER	DESCRIPTION	QTY.
1	12899-00400-BOT	BOTTOM SECTION, 24.44" X 22.88" X 5/16" X 8'-6"	1
1.1	12899-00400-SHB	SHAFT, 12S, 24.44" X 22.88" X 5/16" X 8'-6"	1
1.2	43026	NUT, HEAVY HEX, 1-8, A563 DH3	4
1.3	B22011	4X4 ID TAG, A588	1
1.4	ASSY-00400-CAS-SNG	SINGLE SECTION, 24.44" X 24.44" X 5/16" X 21'-6"	1
1.4.1	12899-00400-CAS-SHS	SHAFT, 12S, 24.44" X 24.44" X 5/16" X 21'-6"	1
1.4.2	12899-00400-CAS-SHG	GND SLV HALF, 12S, 24.82" X 24.82" X 3/16" X 4'-0"	2
1.4.3	12899-00400-PLT	SPLICE PLATE, Ø31 7/16" X 1"	1
1.5	43010	NUT, HEAVY HEX, 1/2-13, HDG, A563 DH	1
1.6	12899-00400-EAR	DRIVING EAR, 1'-0" X 1'-1 1/8" X1"	2
2	12899-00400-MID	MIDDLE SECTION, 24.33 X 16.74 X 1/4" X 41'-6"	1
2.1	12899-00400-SHM	SHAFT, 12S, 24.33" X 16.74" X 1/4" X 41'-6"	1
2.2	43026	NUT, HEAVY HEX, 1-8, A563 DH3	8
2.3	12899-00400-VS202	VANG, OBROUND, 2-SIDED, 27" X 3" X 5/8"	1
2.4	43010	NUT, HEAVY HEX, 1/2-13, HDG, A563 DH	1
2.5	B22011	4X4 ID TAG, A588	1
3	12899-00400-TOP	TOP SECTION, 17.82" X 10.50" X 1/4" X 40'-0"	1
3.1	12899-00400-SHT	SHAFT, 12S, 17.82" X 10.50" X 1/4" X 40'-0"	1
3.2	12899-00400-TS	TOP STRAP, 9 7/8" X 2" X 3/16"	1
3.3	12899-00400-VS201	VANG, OBROUND, 2-SIDED, 19 9/16" X 3" X 5/8"	1
3.4	43026	NUT, HEAVY HEX, 1-8, A563 DH3	4
3.5	43010	NUT, HEAVY HEX, 1/2-13, HDG, A563 DH	1
3.6	43029	NUT, HEX, 1/2-13, BLK, A563 DH	1
3.7	12899-00400-CP	COVER PLATE, Ø11 7/8" X 3/16"	1
3.8	44018	WASHER, FLAT, 1/2", HDG, F436 T1	1
3.9	42120	BOLT, 1/2-13 X 1-3/4", HDG, HH, A307 A	1
3.10	B22011	4X4 ID TAG, A588	1

BY		DATE
DRAWN:	MP	07/01/2026
CHK'D:	EV	07/01/2026

CHM INDUSTRIES
700 E. McLEROY BLVD
SAGINAW, TEXAS 76179
682.286.0046 PH
682.286.0086 FX
CHMINDUSTRIES.COM

(SEE CHM IND., INC. PROCEDURE CHM-PR-1.7.3-F1 FOR STANDARD TOLERANCES)

QTY: 1 | GLM: (FT-K) 605 | JOB NO. 12899 | PART NO. 12899-00400-SBOM | DWG NO. 12899-00400

CUST NAME: GREENVILLE UTILITIES STEEL STRUCTURES-NC

STR #: 46A TYPE/CLASS-HEIGHT: S-07.4 - 85'-0"

DESCRIPTION: STRUCTURE, 24.44" X 10.50" X 83'-0"

SCALE: NTS DO NOT SCALE DRAWING | REV. 1 | SHEET: 5 of 6

THIS DWG IS PROPERTY OF CHM INDUSTRIES AND CONTAINS PROPRIETARY INFORMATION WHICH MAY NOT BE COPIED OR REPRODUCED WITHOUT PRIOR WRITTEN CONSENT FROM CHM INDUSTRIES.

SEE GENERAL NOTES AND DETAILS SHEET FOR SUPPLEMENTARY INFORMATION

TOTAL JOB MATERIAL REQUIREMENTS				
ITEM NO.	PART NUMBER	DESCRIPTION	QTY.	JOB QTY.
1	42120	BOLT, 1/2-13 X 1-3/4", HDG, HH, A307 A	1	1
2	43026	NUT, HEAVY HEX, 1-8, A563 DH3	16	16
3	43029	NUT, HEX, 1/2-13, BLK, A563 DH	1	1
4	44018	WASHER, FLAT, 1/2", HDG, F436 T1	1	1
5	12899-00400-VS201	VANG, OBROUND, 2-SIDED, 19 9/16" X 3" X 5/8"	1	1
6	12899-00400-CP	COVER PLATE, Ø11 7/8" X 3/16"	1	1
7	12899-00400-SHB	SHAFT, 12S, 24.44" X 22.88" X 5/16" X 8'-6"	1	1
8	12899-00400-SHM	SHAFT, 12S, 24.33" X 16.74" X 1/4" X 41'-6"	1	1
9	12899-00400-SHT	SHAFT, 12S, 17.82" X 10.50" X 1/4" X 40'-0"	1	1
10	12899-00400-TS	TOP STRAP, 9 7/8" X 2" X 3/16"	1	1
11	12899-00400-VS202	VANG, OBROUND, 2-SIDED, 27" X 3" X 5/8"	1	1
12	43010	NUT, HEAVY HEX, 1/2-13, HDG, A563 DH	3	3
13	B22011	4X4 ID TAG, A588	3	3
14	12899-00400-CAS-SHS	SHAFT, 12S, 24.44" X 24.44" X 5/16" X 21'-6"	1	1
15	12899-00400-CAS-SHG	GND SLV HALF, 12S, 24.82" X 24.82" X 3/16" X 4'-0"	2	2
16	12899-00400-PLT	SPLICE PLATE, Ø31 7/16" X 1"	1	1
17	12899-00400-EAR	DRIVING EAR, 1'-0" X 1'-1 1/8" X1"	2	2

BY	DATE
DRAWN: MP	07/01/2026
CHK'D: EV	07/01/2026

CHM INDUSTRIES
700 E. McLEROY BLVD
SAGINAW, TEXAS 76179
682.286.0046 PH
682.286.0086 FX
CHMINDUSTRIES.COM

(SEE CHM IND., INC. PROCEDURE CHM-PR-1.7.3-F1 FOR STANDARD TOLERANCES)

QTY: 1 | GLM: (FT-K) 605 | JOB NO. 12899 | PART NO. 12899-00400-PBOM | DWG NO. 12899-00400

CUST NAME: GREENVILLE UTILITIES STEEL STRUCTURES-NC

STR #: 46A TYPE/CLASS-HEIGHT: S-07.4 - 85'-0"

DESCRIPTION: STRUCTURE, 24.44" X 10.50" X 83'-0"

SCALE: NTS DO NOT SCALE DRAWING

REV: 1 SHEET: 6 of 6

THIS DWG IS PROPERTY OF CHM INDUSTRIES AND CONTAINS PROPRIETARY INFORMATION WHICH MAY NOT BE COPIED OR REPRODUCED WITHOUT PRIOR WRITTEN CONSENT FROM CHM INDUSTRIES.

FINISH:	BLACK WEIGHT	GALVANIZED WEIGHT
GALVANIZED	9432 LBS	9998 LBS
WEIGHTS ABOVE INCLUDE ALL BOM ITEMS		

SEE GENERAL NOTES AND DETAILS SHEET FOR SUPPLEMENTARY INFORMATION

ITEM #	PART #	DESCRIPTION	QTY.
1	12899-00500-BOT	BOTTOM SECTION, 31.78" X 29.91" X 5/16" X 8'-6"	1
2	12899-00500-MID	MIDDLE SECTION, 31.65" X 24.45" X 5/16" X 32'-9"	1
3	12899-00500-TOP	TOP SECTION, 25.90" X 16.00" X 1/4" X 45'-0"	1

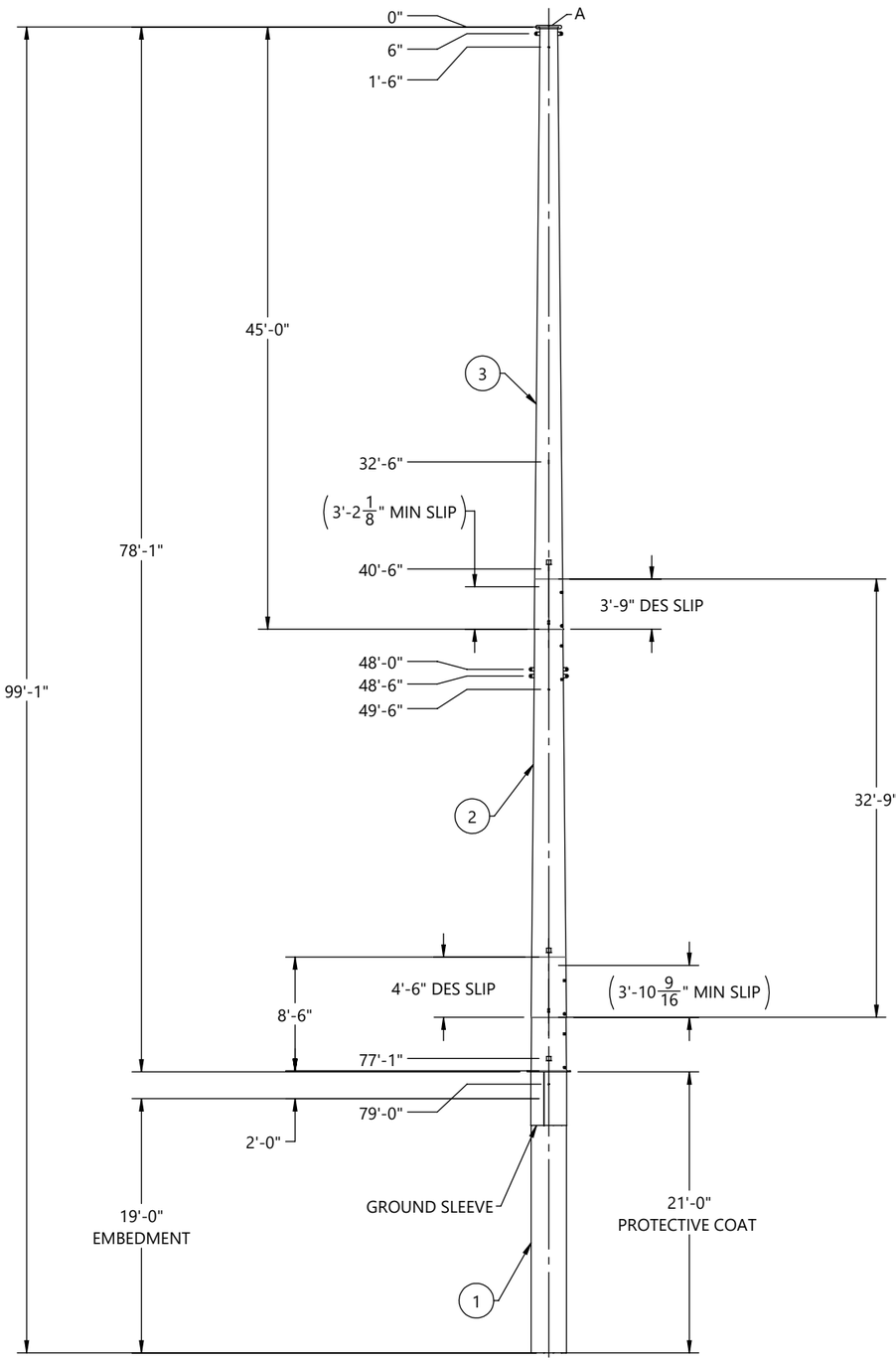

FRONT VIEW
(LOOKING @ 0° REF
ORIENTATION DETAIL)

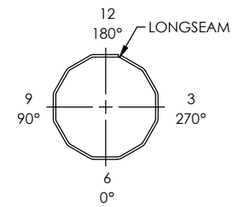

ORIENTATION DETAIL
TOP VIEW

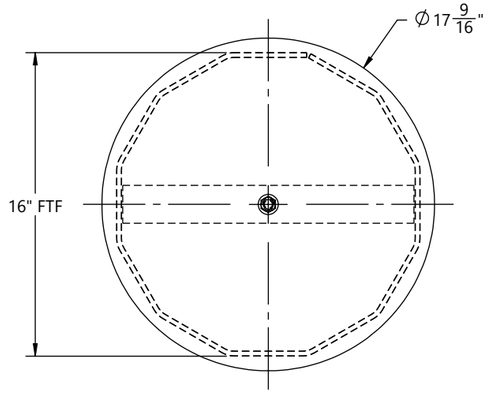

SECTION B-B

HOLE CHART		
HOLE SIZE (INCH)	DISTANCE FROM TOP OF SHAFT	FLAT(S)
13/16"	8'-0"	3, 9
13/16"	9'-0"	3, 9
13/16"	16'-0"	3, 9
13/16"	17'-0"	3, 9
13/16"	24'-0"	3, 9
13/16"	25'-0"	3, 9
11/16"	33'-0"	6,12
11/16"	34'-0"	6,12
11/16"	41'-0"	6,12
11/16"	42'-0"	6,12

CUSTOMER PLEASE VERIFY
HOLES AT 41'-0" & 42'-0" ELEVATION
ARE FALLING IN BETWEEN SLIP JOINT
PLEASE SUGGEST

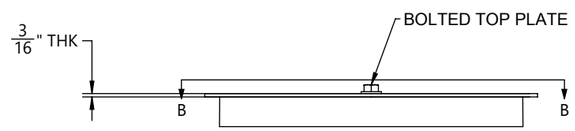

DETAIL A

BY		DATE
DRAWN:	KR	07/17/2026
CHK'D:	EV	07/17/2026

REV.	ECR #	DESCRIPTION	APPROVED BY	DATE
1		SUBMITTAL FOR APPROVAL	EV	07/17/2026

REVISIONS

CHM INDUSTRIES
700 E. McLEROY BLVD
SAGINAW, TEXAS 76179
682.286.0046 PH
682.286.0086 FX
CHMINDUSTRIES.COM

(SEE CHM IND., INC. PROCEDURE CHM-PR-1.7.3-F1 FOR STANDARD TOLERANCES)

QTY: 1	GLM: (FT-K) 1296.11	JOB NO. 12899	PART NO. 12899-00500-MN	DWG NO. 12899-00500

CUST NAME: GREENVILLE UTILITIES STEEL STRUCTURES- NC
STR #: 47 TYPE/CLASS-HEIGHT: S17-80'-0"
DESCRIPTION: STRUCTURE, 31.78" X 16.00" X 78'-0"

SCALE: NTS
DO NOT SCALE DRAWING
REV. 1 SHEET: 1 of 6

THIS DWG IS PROPERTY OF CHM INDUSTRIES AND CONTAINS PROPRIETARY INFORMATION WHICH MAY NOT BE COPIED OR REPRODUCED WITHOUT PRIOR WRITTEN CONSENT FROM CHM INDUSTRIES.

FINISH:	BLACK WEIGHT	GALVANIZED WEIGHT
GALVANIZED	3706 LBS	3928 LBS
WEIGHTS ABOVE INCLUDE ALL BOM ITEMS		

SEE GENERAL NOTES AND DETAILS SHEET FOR SUPPLEMENTARY INFORMATION

ITEM #	PART #	DESCRIPTION	MAT'L	QTY.
1	12899-00500-SHB	SHAFT, 12S, 31.78" X 29.91" X 5/16" X 8'-6"	A572 GR65	1
2	12899-00500-CAS-SHS	SHAFT, 12S, 31.78" X 31.78" X 5/16" X 21'-0"	A572 GR65	1
3	12899-00500-CAS-SHG	GND SLV HALF, 12S, 32.16" X 32.16" X 3/16" X 4'-0"	A572 GR65	2
4	12899-00500-PLT	SPLICE PLATE, Ø38 3/4" X 1"	A572 GR65	1
5	12899-00500-EAR	DRIVING EAR 1'-0" X 1'-2 1/2" X1"	A572 GR65	2
6	43026	NUT, HEAVY HEX, 1-8, A563 DH3	A563-DH3	4
7	43010	NUT, HEAVY HEX, 1/2-13, HDG, A563 DH	A563-DH	1
8	B22011	4X4 ID TAG, A588	A588	1

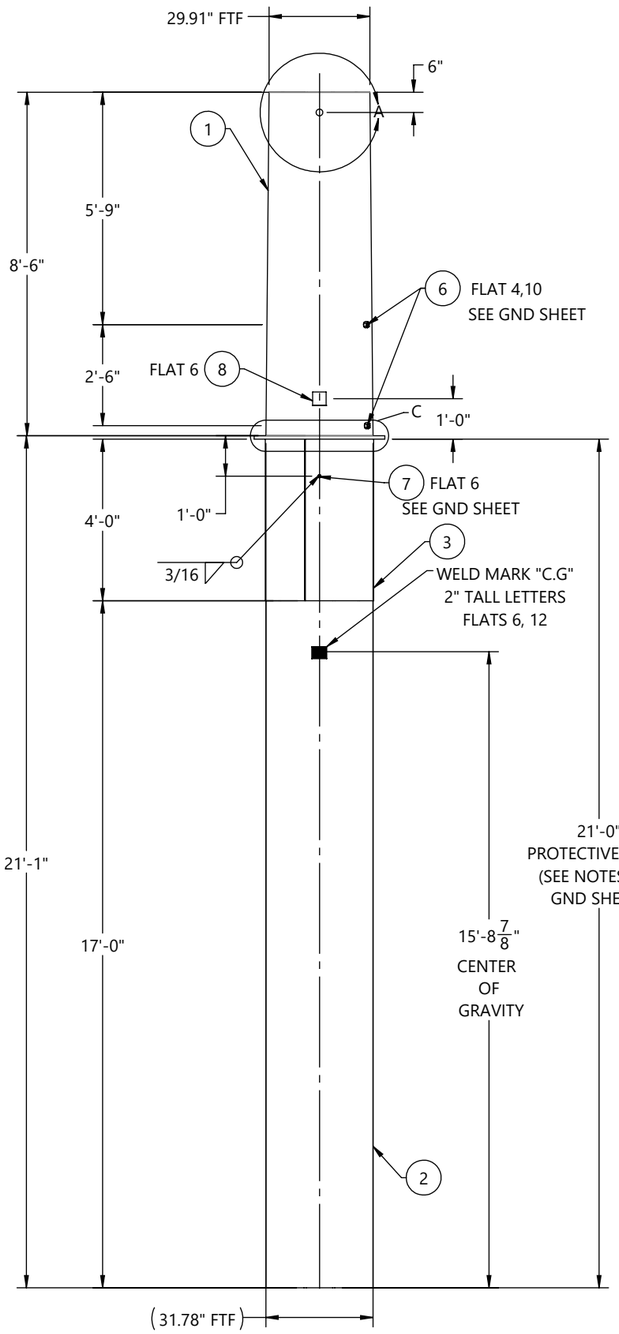

FRONT VIEW
(LOOKING @ 0° REF
ORIENTATION DETAIL)

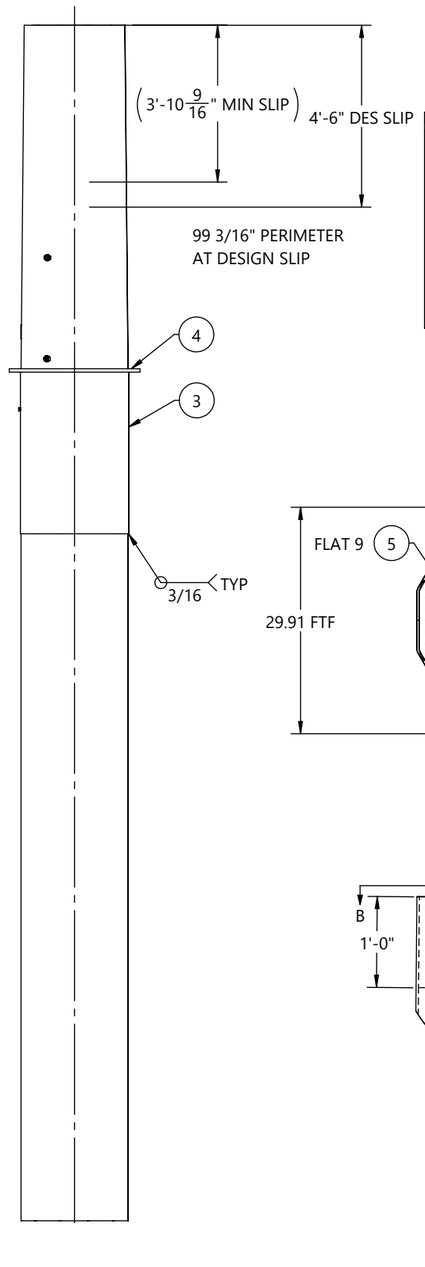

SIDE VIEW
(LOOKING @ 270° REF
ORIENTATION DETAIL)

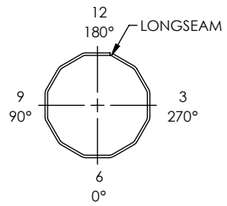

ORIENTATION DETAIL
TOP VIEW

GREENVILLE UTILITIES STEEL STRUCTURES- NC
STR#: 47, S17-80'-0"
GLM: 1296.11 FT-K
STR WT: 9998 LBS
SEC WT: 3928 LBS
DOM: [mm/YYYY]
CHM-12899-00500
12899-00500-BOT

ID TAG

TEXT TO BE 7/16" LETTERS
TAGS TO BE ORIENTED ON 0° FLAT
WEIGHT ON ID TAG IS FINISHED GALV. WEIGHT

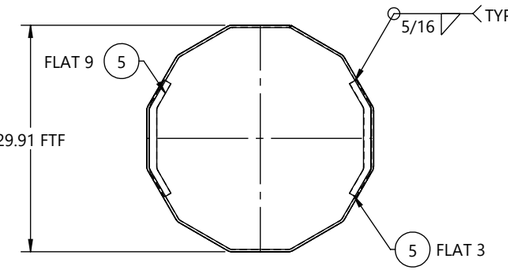

SECTION B-B

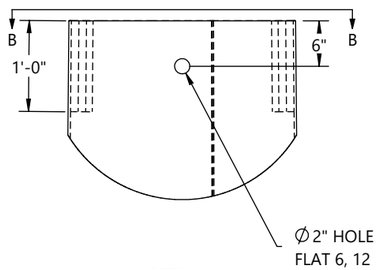

DETAIL A

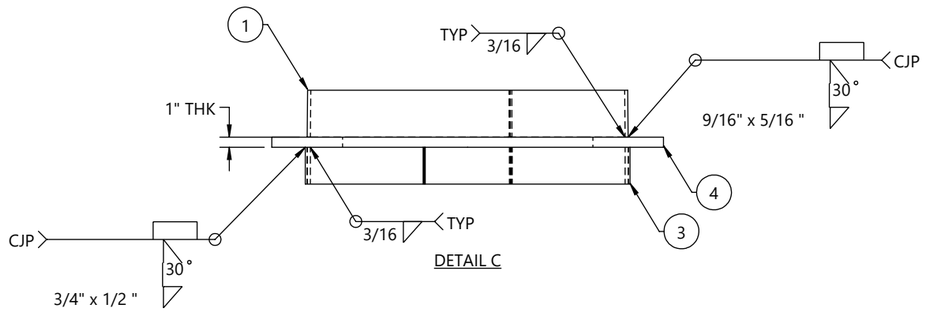

DETAIL C

BY		DATE
DRAWN:	KR	07/17/2026
CHK'D:	EV	07/17/2026

(SEE CHM IND., INC. PROCEDURE CHM-PR-1.7.3-F1 FOR STANDARD TOLERANCES)

REV.	ECR #	DESCRIPTION	APPROVED BY	DATE
1		SUBMITTAL FOR APPROVAL	EV	07/17/2026

REVISIONS

CHM INDUSTRIES
700 E. McLEROY BLVD
SAGINAW, TEXAS 76179
682.286.0046 PH
682.286.0086 FX
CHMINDUSTRIES.COM

QTY: 1 | GLM: (FT-K) 1296.11 | JOB NO. 12899 | PART NO. 12899-00500-BOT | DWG NO. 12899-00500

CUST NAME: GREENVILLE UTILITIES STEEL STRUCTURES- NC
STR #: 47 TYPE/CLASS-HEIGHT: S17-80'-0"
DESCRIPTION: BOTTOM SECTION, 31.78" X 29.91" X 5/16" X 8'-6"

SCALE: NTS
DO NOT SCALE DRAWING
REV. 1 | SHEET: 2 of 6

THIS DWG IS PROPERTY OF CHM INDUSTRIES AND CONTAINS PROPRIETARY INFORMATION WHICH MAY NOT BE COPIED OR REPRODUCED WITHOUT PRIOR WRITTEN CONSENT FROM CHM INDUSTRIES.

FINISH:	BLACK WEIGHT	GALVANIZED WEIGHT
GALVANIZED	3130 LBS	3318 LBS
WEIGHTS ABOVE INCLUDE ALL BOM ITEMS		

SEE GENERAL NOTES AND DETAILS SHEET FOR SUPPLEMENTARY INFORMATION

ITEM #	PART #	DESCRIPTION	MAT'L	QTY.
1	12899-00500-SHM	SHAFT, 12S, 31.65" X 24.45" X 5/16" X 32'-9"	A572 GR65	1
2	12899-00500-VS204	VANG, OBROUND, 2-SIDED, 34 15/16" X 3" X 5/8"	A572 GR65	1
3	12899-00500-VS205	VANG, OBROUND, 2-SIDED, 35 1/16" X 3" X 5/8"	A572 GR65	1
4	43026	NUT, HEAVY HEX, 1-8, A563 DH3	A563-DH3	8
5	43010	NUT, HEAVY HEX, 1/2-13, HDG, A563 DH	A563-DH	1
6	B22011	4X4 ID TAG, A588	A588	1

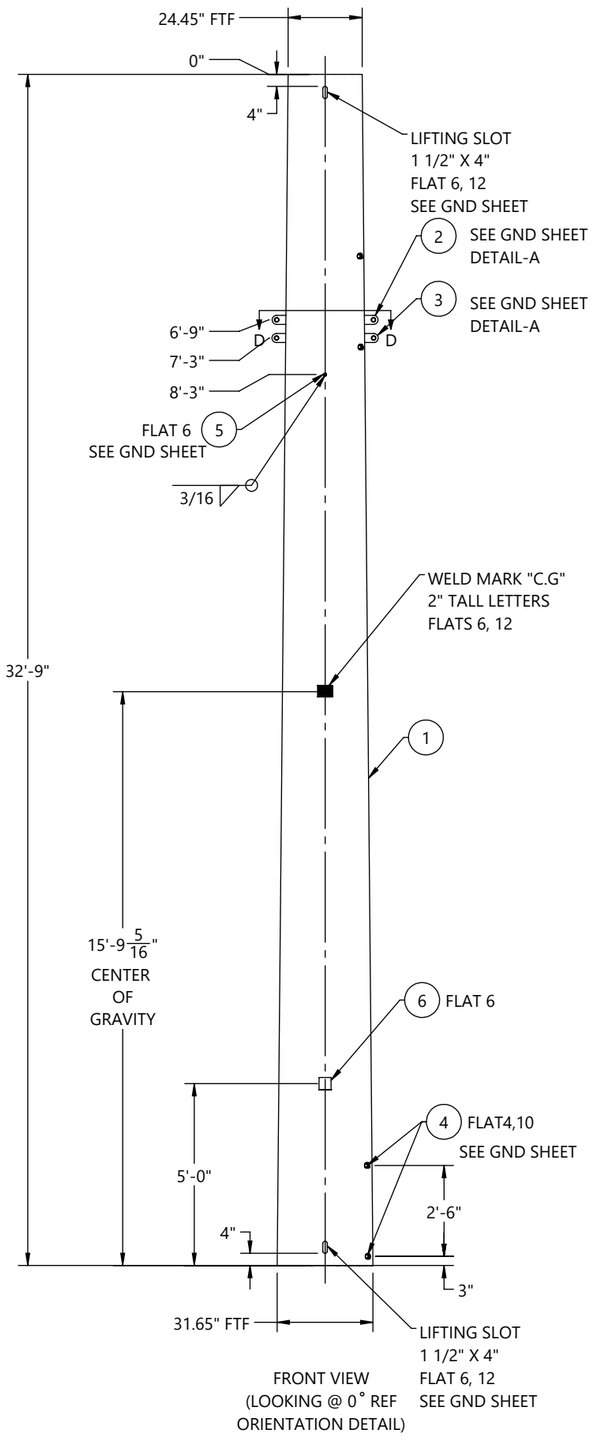

FRONT VIEW
(LOOKING @ 0° REF
ORIENTATION DETAIL)

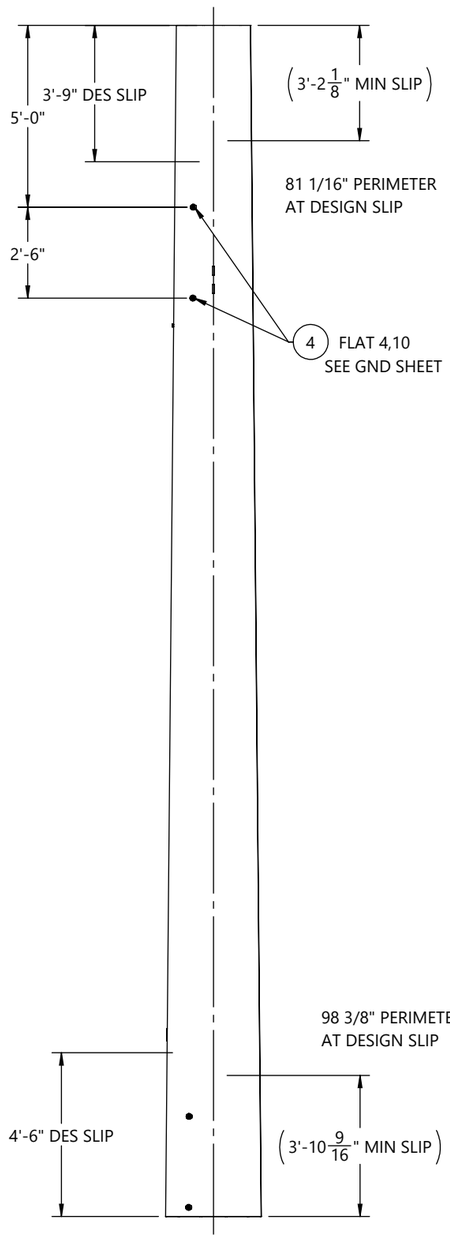

SIDE VIEW
(LOOKING @ 270° REF
ORIENTATION DETAIL)

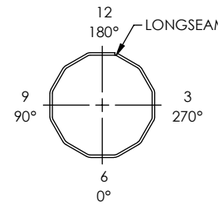

ORIENTATION DETAIL
TOP VIEW

GREENVILLE UTILITIES STEEL STRUCTURES- NC
STR#: 47, S17-80'-0"
SEC WT: 3318 LBS
DOM: [mm/YYYY]
CHM-12899-00500
12899-00500-MID

ID TAG

TEXT TO BE 7/16" LETTERS
TAGS TO BE ORIENTED ON 0° FLAT
WEIGHT ON ID TAG IS FINISHED GALV. WEIGHT

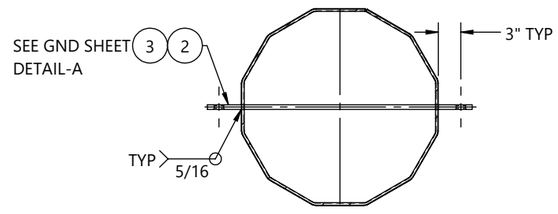

SECTION D-D
(TYP 2 PLACES)

BY		DATE
DRAWN:	KR	07/17/2026
CHK'D:	EV	07/17/2026

REV.	ECR #	DESCRIPTION	APPROVED BY	DATE
1		SUBMITTAL FOR APPROVAL	EV	07/17/2026

REVISIONS

CHM INDUSTRIES
700 E. McLEROY BLVD
SAGINAW, TEXAS 76179
682.286.0046 PH
682.286.0086 FX
CHMINDUSTRIES.COM

(SEE CHM IND., INC. PROCEDURE CHM-PR-1.7.3-F1 FOR STANDARD TOLERANCES)

QTY: 1 | GLM: (FT-K) 1296.11 | JOB NO. 12899 | PART NO. 12899-00500-MID | DWG NO. 12899-00500

CUST NAME: GREENVILLE UTILITIES STEEL STRUCTURES- NC
STR #: 47 TYPE/CLASS-HEIGHT: S17-80'-0"
DESCRIPTION: MIDDLE SECTION, 31.65" X 24.45" X 5/16" X 32'-9"

SCALE: NTS
DO NOT SCALE DRAWING
REV.: 1 | SHEET: 3 of 6

THIS DWG IS PROPERTY OF CHM INDUSTRIES AND CONTAINS PROPRIETARY INFORMATION WHICH MAY NOT BE COPIED OR REPRODUCED WITHOUT PRIOR WRITTEN CONSENT FROM CHM INDUSTRIES.

FINISH:	BLACK WEIGHT	GALVANIZED WEIGHT
GALVANIZED	2597 LBS	2753 LBS
WEIGHTS ABOVE INCLUDE ALL BOM ITEMS		

SEE GENERAL NOTES AND DETAILS SHEET FOR SUPPLEMENTARY INFORMATION

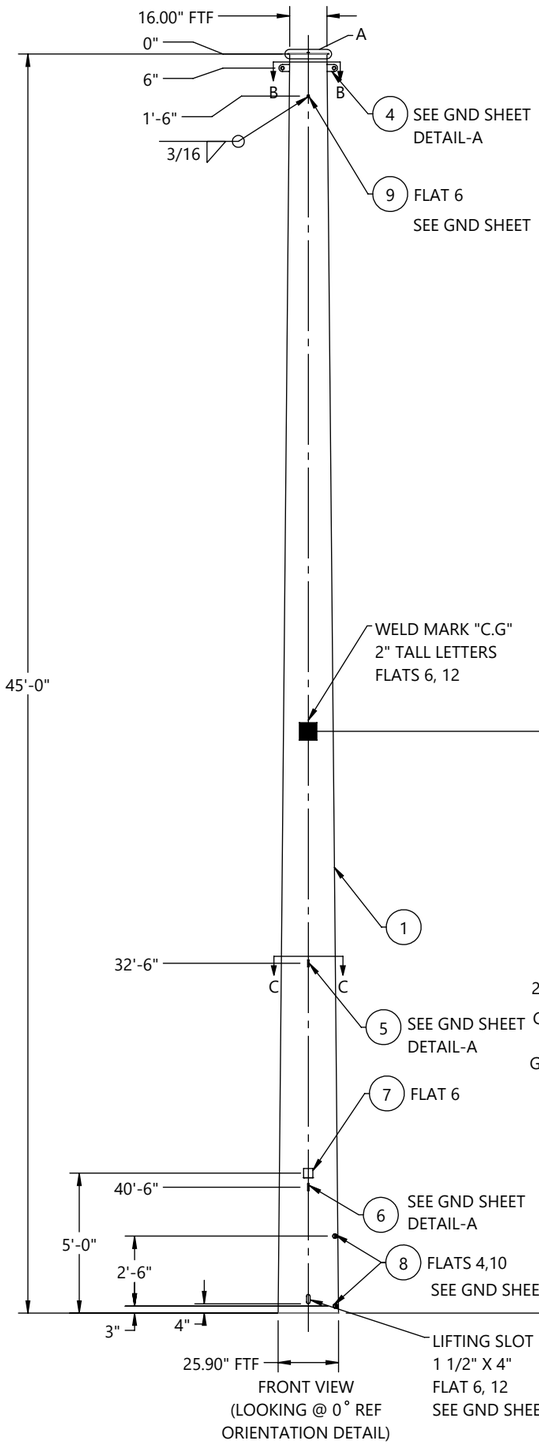

FRONT VIEW
(LOOKING @ 0° REF
ORIENTATION DETAIL)

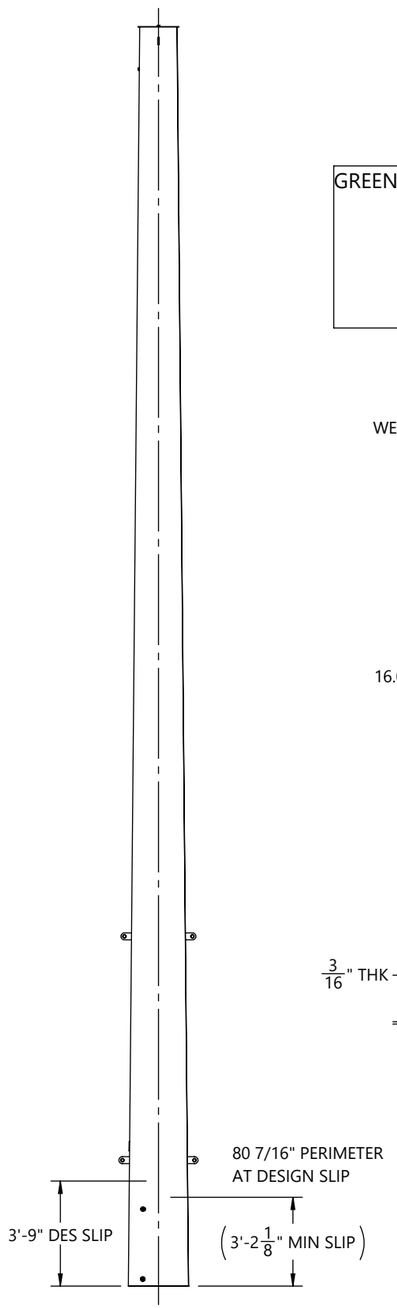

SIDE VIEW
(LOOKING @ 270° REF
ORIENTATION DETAIL)

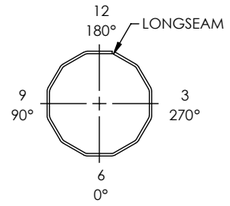

ORIENTATION DETAIL
TOP VIEW

GREENVILLE UTILITIES STEEL STRUCTURES- NC
STR#: 47, S17-80'-0"
SEC WT: 2753 LBS
DOM: [mm/YYYY]
CHM-12899-00500
12899-00500-TOP

ID TAG

TEXT TO BE 7/16" LETTERS
TAGS TO BE ORIENTED ON 0° FLAT
WEIGHT ON ID TAG IS FINISHED GALV. WEIGHT

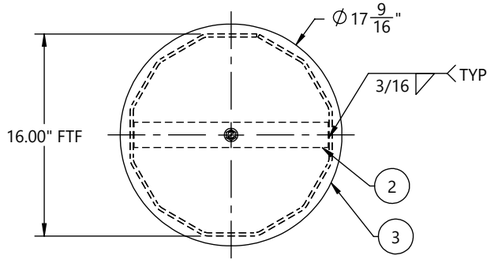

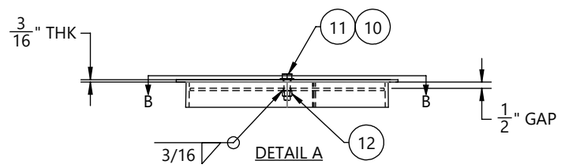

ITEM #	PART #	DESCRIPTION	MAT'L	QTY.
1	12899-00500-SHT	SHAFT, 12S, 25.90" X 16.00" X 1/4" X 45'-0"	A572 GR65	1
2	12899-00500-TS	TOP STRAP, 15 3/8" X 2" X 3/16"	A572 GR65	1
3	12899-00500-CP	COVER PLATE, Ø17 9/16" X 3/16"	A572 GR65	1
4	12899-00500-VS201	VANG, OBROUND, 2-SIDED, 25 1/8" X 3" X 5/8"	A572 GR65	1
5	12899-00500-VS202	VANG, OBROUND, 2-SIDED, 32 1/8" X 3" X 5/8"	A572 GR65	1
6	12899-00500-VS203	VANG, OBROUND, 2-SIDED, 33 15/16" X 3" X 5/8"	A572 GR65	1
7	B22011	4X4 ID TAG, A588	A588	1
8	43026	NUT, HEAVY HEX, 1-8, A563 DH3	A563-DH3	4
9	43010	NUT, HEAVY HEX, 1/2-13, HDG, A563 DH	A563-DH	1
10	44018	WASHER, FLAT, 1/2", HDG, F436 T1	F436-T1	1
11	42120	BOLT, 1/2-13 X 1-3/4", HDG, HH, A307 A	A307-A	1
12	43029	NUT, HEX, 1/2-13, BLK, A563 DH	A563-DH	1

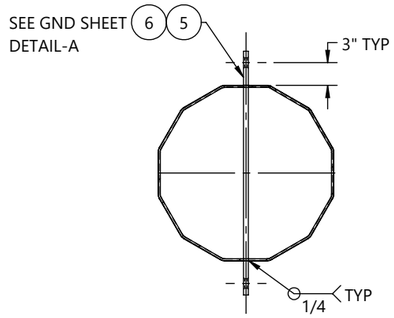

SECTION C-C
(TYP-2 PLACES)

HOLE CHART		
HOLE SIZE (INCH)	DISTANCE FROM TOP OF SHAFT	FLAT(S)
13/16"	8'-0"	3, 9
13/16"	9'-0"	3, 9
13/16"	16'-0"	3, 9
13/16"	17'-0"	3, 9
13/16"	24'-0"	3, 9
13/16"	25'-0"	3, 9
11/16"	33'-0"	6,12
11/16"	34'-0"	6,12
11/16"	41'-0"	6,12
11/16"	42'-0"	6,12

CUSTOMER PLEASE VERIFY
HOLES AT 41'-0" & 42'-0" ELEVATION
ARE FALLING IN BETWEEN SLIP JOINT
PLEASE SUGGEST

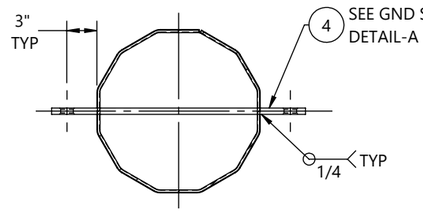

SECTION B-B

BY		DATE
DRAWN:	KR	07/17/2026
CHK'D:	EV	07/17/2026

REV.	ECR #	DESCRIPTION	APPROVED BY	DATE
1		SUBMITTAL FOR APPROVAL	EV	07/17/2026

REVISIONS

CHM INDUSTRIES
700 E. McLEROY BLVD
SAGINAW, TEXAS 76179
682.286.0046 PH
682.286.0086 FX
CHMINDUSTRIES.COM

(SEE CHM IND., INC. PROCEDURE CHM-PR-1.7.3-F1 FOR STANDARD TOLERANCES)

QTY: 1 | GLM: (FT-K) 1296.11 | JOB NO. 12899 | PART NO. 12899-00500-TOP | DWG NO. 12899-00500

CUST NAME: GREENVILLE UTILITIES STEEL STRUCTURES- NC
STR #: 47 TYPE/CLASS-HEIGHT: S17-80'-0"
DESCRIPTION: TOP SECTION, 25.90" X 16.00" X 1/4" X 45'-0"

SCALE: NTS DO NOT SCALE DRAWING
REV.: 1 SHEET: 4 of 6

THIS DWG IS PROPERTY OF CHM INDUSTRIES AND CONTAINS PROPRIETARY INFORMATION WHICH MAY NOT BE COPIED OR REPRODUCED WITHOUT PRIOR WRITTEN CONSENT FROM CHM INDUSTRIES.

SEE GENERAL NOTES AND DETAILS SHEET FOR SUPPLEMENTARY INFORMATION

INDIVIDUAL STRUCTURE BILL OF MATERIALS			
ITEM NO.	PART NUMBER	DESCRIPTION	QTY.
1	12899-00500-BOT	BOTTOM SECTION, 31.78" X 29.91" X 5/16" X 8'-6"	1
1.1	12899-00500-SHB	SHAFT, 12S, 31.78" X 29.91" X 5/16" X 8'-6"	1
1.2	B22011	4X4 ID TAG, A588	1
1.3	43026	NUT, HEAVY HEX, 1-8, A563 DH3	4
1.4	12899-00500-CAS-MN	STRUCTURE, 31.78" X 31.78" X 21'-0"	1
1.4.1	12899-00500-CAS-SNG	SINGLE SECTION, 31.78" X 31.78" X 5/16" X 21'-0"	1
1.4.1.1	12899-00500-CAS-SHS	SHAFT, 12S, 31.78" X 31.78" X 5/16" X 21'-0"	1
1.4.1.2	12899-00500-CAS-SHG	GND SLV HALF, 12S, 32.16" X 32.16" X 3/16" X 4'-0"	2
1.4.1.3	12899-00500-PLT	SPLICE PLATE, Ø38 3/4" X 1"	1
1.4.2	43010	NUT, HEAVY HEX, 1/2-13, HDG, A563 DH	1
1.5	12899-00500-EAR	DRIVING EAR 1'-0" X 1'-2 1/2" X1"	2
2	12899-00500-MID	MIDDLE SECTION, 31.65" X 24.45" X 5/16" X 32'-9"	1
2.1	12899-00500-SHM	SHAFT, 12S, 31.65" X 24.45" X 5/16" X 32'-9"	1
2.2	B22011	4X4 ID TAG, A588	1
2.3	43026	NUT, HEAVY HEX, 1-8, A563 DH3	8
2.4	43010	NUT, HEAVY HEX, 1/2-13, HDG, A563 DH	1
2.5	12899-00500-VS204	VANG, OBROUND, 2-SIDED, 34 15/16" X 3" X 5/8"	1
2.6	12899-00500-VS205	VANG, OBROUND, 2-SIDED, 35 1/16" X 3" X 5/8"	1
3	12899-00500-TOP	TOP SECTION, 25.90" X 16.00" X 1/4" X 45'-0"	1
3.1	12899-00500-SHT	SHAFT, 12S, 25.90" X 16.00" X 1/4" X 45'-0"	1
3.2	12899-00500-TS	TOP STRAP, 15 3/8" X 2" X 3/16"	1
3.3	12899-00500-VS201	VANG, OBROUND, 2-SIDED, 25 1/8" X 3" X 5/8"	1
3.4	B22011	4X4 ID TAG, A588	1
3.5	43026	NUT, HEAVY HEX, 1-8, A563 DH3	4
3.6	43010	NUT, HEAVY HEX, 1/2-13, HDG, A563 DH	1
3.7	12899-00500-CP	COVER PLATE, Ø17 9/16" X 3/16"	1
3.8	44018	WASHER, FLAT, 1/2", HDG, F436 T1	1
3.9	42120	BOLT, 1/2-13 X 1-3/4", HDG, HH, A307 A	1
3.10	12899-00500-VS202	VANG, OBROUND, 2-SIDED, 32 1/8" X 3" X 5/8"	1
3.11	43029	NUT, HEX, 1/2-13, BLK, A563 DH	1
3.12	12899-00500-VS203	VANG, OBROUND, 2-SIDED, 33 15/16" X 3" X 5/8"	1

BY		DATE
DRAWN:	KR	07/17/2026
CHK'D:	EV	07/17/2026

CHM INDUSTRIES
700 E. McLEROY BLVD
SAGINAW, TEXAS 76179
682.286.0046 PH
682.286.0086 FX
CHMINDUSTRIES.COM

(SEE CHM IND., INC. PROCEDURE CHM-PR-1.7.3-F1 FOR STANDARD TOLERANCES)

QTY: 1 | GLM: (FT-K) 1296.11 | JOB NO. 12899 | PART NO. 12899-00500-SBOM | DWG NO. 12899-00500

CUST NAME: GREENVILLE UTILITIES STEEL STRUCTURES- NC
STR #: 47 TYPE/CLASS-HEIGHT: S17-80'-0"
DESCRIPTION: STRUCTURE, 31.78" X 16.00" X 78'-0"

SCALE: NTS DO NOT SCALE DRAWING | REV. 1 | SHEET: 5 of 6

THIS DWG IS PROPERTY OF CHM INDUSTRIES AND CONTAINS PROPRIETARY INFORMATION WHICH MAY NOT BE COPIED OR REPRODUCED WITHOUT PRIOR WRITTEN CONSENT FROM CHM INDUSTRIES.

SEE GENERAL NOTES AND DETAILS SHEET FOR SUPPLEMENTARY INFORMATION

TOTAL JOB MATERIAL REQUIREMENTS				
ITEM NO.	PART NUMBER	DESCRIPTION	QTY.	JOB QTY.
1	42120	BOLT, 1/2-13 X 1-3/4", HDG, HH, A307 A	1	1
2	43026	NUT, HEAVY HEX, 1-8, A563 DH3	16	16
3	44018	WASHER, FLAT, 1/2", HDG, F436 T1	1	1
4	B22011	4X4 ID TAG, A588	3	3
5	12899-00500-VS201	VANG, OBROUND, 2-SIDED, 25 1/8" X 3" X 5/8"	1	1
6	12899-00500-CP	COVER PLATE, Ø17 9/16" X 3/16"	1	1
7	12899-00500-SHB	SHAFT, 12S, 31.78" X 29.91" X 5/16" X 8'-6"	1	1
8	12899-00500-SHM	SHAFT, 12S, 31.65" X 24.45" X 5/16" X 32'-9"	1	1
9	12899-00500-SHT	SHAFT, 12S, 25.90" X 16.00" X 1/4" X 45'-0"	1	1
10	12899-00500-TS	TOP STRAP, 15 3/8" X 2" X 3/16"	1	1
11	12899-00500-VS202	VANG, OBROUND, 2-SIDED, 32 1/8" X 3" X 5/8"	1	1
12	43010	NUT, HEAVY HEX, 1/2-13, HDG, A563 DH	3	3
13	43029	NUT, HEX, 1/2-13, BLK, A563 DH	1	1
14	12899-00500-VS204	VANG, OBROUND, 2-SIDED, 34 15/16" X 3" X 5/8"	1	1
15	12899-00500-VS205	VANG, OBROUND, 2-SIDED, 35 1/16" X 3" X 5/8"	1	1
16	12899-00500-VS203	VANG, OBROUND, 2-SIDED, 33 15/16" X 3" X 5/8"	1	1
17	12899-00500-CAS-SHS	SHAFT, 12S, 31.78" X 31.78" X 5/16" X 21'-0"	1	1
18	12899-00500-CAS-SHG	GND SLV HALF, 12S, 32.16" X 32.16" X 3/16" X 4'-0"	2	2
19	12899-00500-PLT	SPLICE PLATE, Ø38 3/4" X 1"	1	1
20	12899-00500-EAR	DRIVING EAR 1'-0" X 1'-2 1/2" X1"	2	2

BY		DATE
DRAWN:	KR	07/17/2026
CHK'D:	EV	07/17/2026

CHM INDUSTRIES
700 E. McLEROY BLVD
SAGINAW, TEXAS 76179
682.286.0046 PH
682.286.0086 FX
CHMINDUSTRIES.COM

(SEE CHM IND., INC. PROCEDURE CHM-PR-1.7.3-F1 FOR STANDARD TOLERANCES)

QTY: 1 | GLM: (FT-K) 1296.11 | JOB NO. 12899 | PART NO. 12899-00500-PBOM | DWG NO. 12899-00500

CUST NAME: GREENVILLE UTILITIES STEEL STRUCTURES- NC
STR #: 47 TYPE/CLASS-HEIGHT: S17-80'-0"
DESCRIPTION: STRUCTURE, 31.78" X 16.00" X 78'-0"

SCALE: NTS DO NOT SCALE DRAWING | REV: 1 | SHEET: 6 of 6

THIS DWG IS PROPERTY OF CHM INDUSTRIES AND CONTAINS PROPRIETARY INFORMATION WHICH MAY NOT BE COPIED OR REPRODUCED WITHOUT PRIOR WRITTEN CONSENT FROM CHM INDUSTRIES.

FINISH:	BLACK WEIGHT	GALVANIZED WEIGHT
GALVANIZED	31766 LBS	33672 LBS
WEIGHTS ABOVE INCLUDE ALL BOM ITEMS		

SEE GENERAL NOTES AND DETAILS SHEET FOR SUPPLEMENTARY INFORMATION

ITEM #	PART #	DESCRIPTION	QTY.
1	12899-00600-BOT	BOTTOM SECTION, 52.44" X 37.63" X 7/16" X 47'-6"	1
2	12899-00600-TOP	TOP SECTION, 39.97" X 25.00" X 1/4" X 48'-0"	1
3	12899-00002-ARM	SHAFT, ARM, 8S, 9.00" X 8.50" X 1/4" X 6'-6"	4
4	12899-00600-CAS	CAISSON, 51.00" X 51.00" X 1/2" X 30'-0"	1
5	43031	NUT, LOCK, ANCO, 1-8, HDG, A563 DH	32
6	44044	WASHER, FLAT, 1", HDG, F436 T1	64
7	42130	BOLT, HEAVY, 1-8 X 3-1/2", HDG, HH, A325 T1	32
8	12899-00600-AB	ANCHOR BOLT, Ø2 1/4" X 4'-0", A-615	20
9	43035	NUT, HEAVY HEX, 2 1/4-4.5, HDG, A563 DH	80
10	44070	WASHER, FLAT, 2-1/4", HDG, F436 T1	20

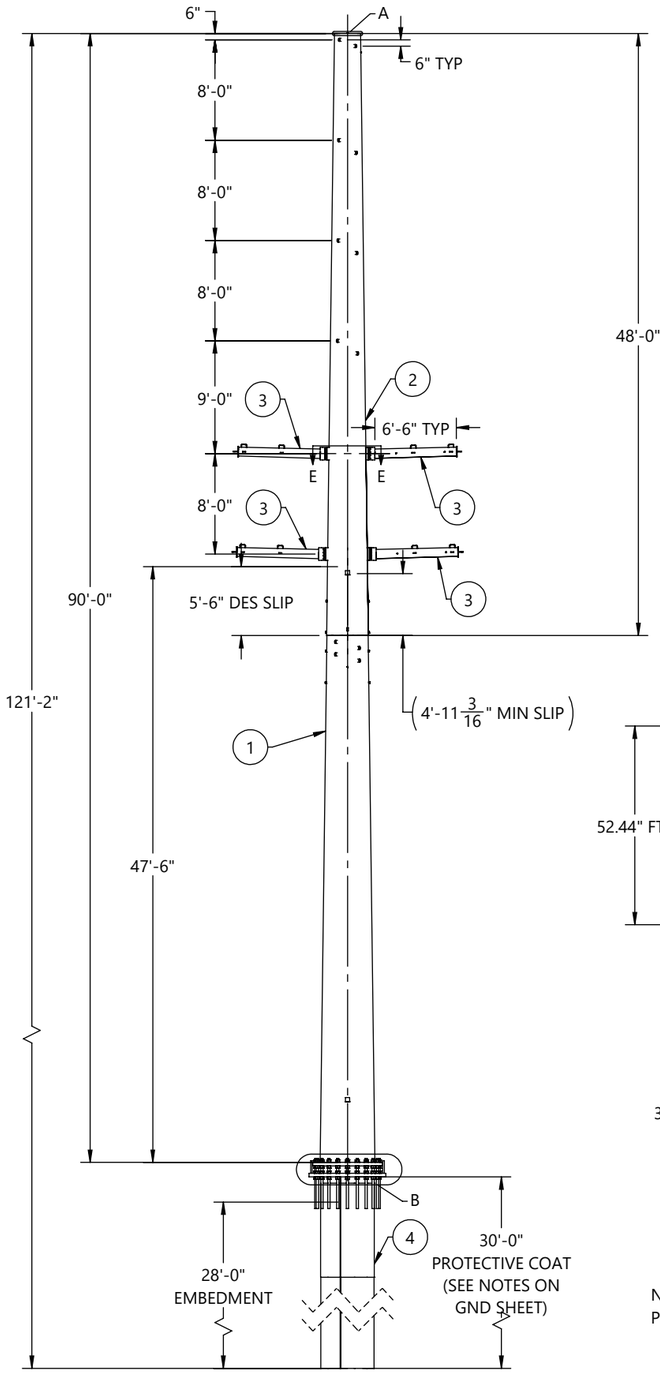

FRONT VIEW
(LOOKING @ 0° REF
ORIENTATION DETAIL)

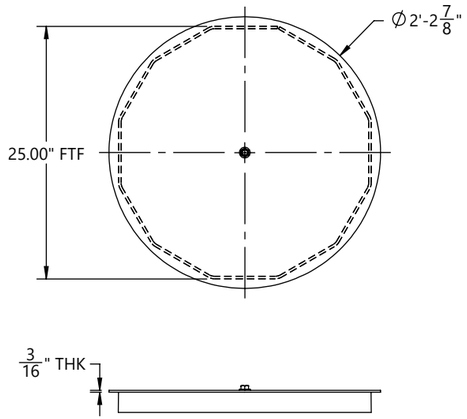

DETAIL A

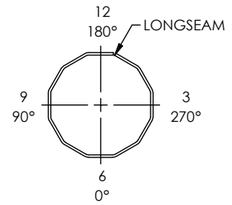

ORIENTATION DETAIL
TOP VIEW

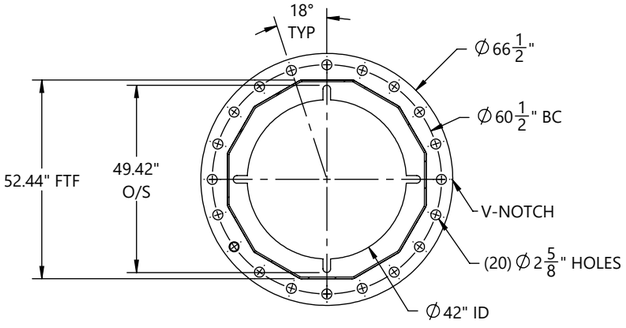

SECTION C-C

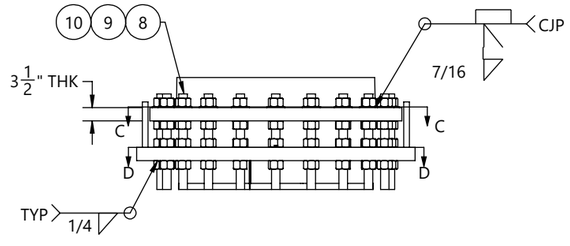

NOTE: WELD NUT
PRIOR TO BASE PLATE

DETAIL B

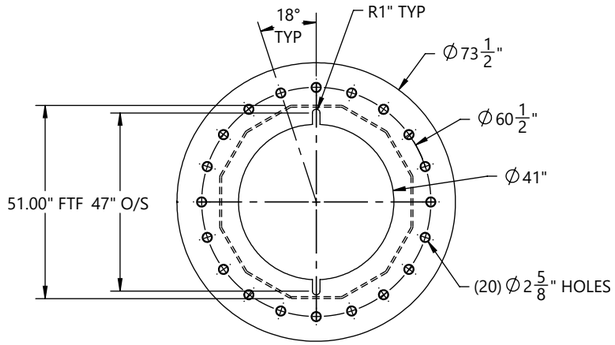

SECTION D-D

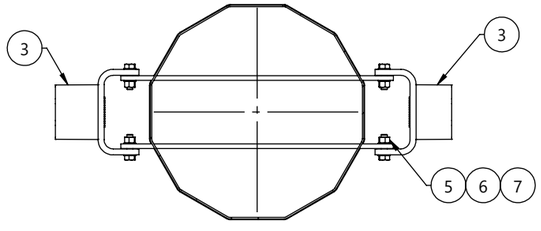

SECTION E-E
(TYP 2 PLACES)

BY	DATE
DRAWN: KB	07/03/2026
CHK'D: EV	07/03/2026

REV.	ECR #	DESCRIPTION	APPROVED BY	DATE
1		SUBMITTAL FOR APPROVAL	EV	07/03/2026

REVISIONS

CHM INDUSTRIES
700 E. McLEROY BLVD
SAGINAW, TEXAS 76179
682.286.0046 PH
682.286.0086 FX
CHMINDUSTRIES.COM

(SEE CHM IND., INC. PROCEDURE CHM-PR-1.7.3-F1 FOR STANDARD TOLERANCES)

QTY: 1 | GLM: (FT-K) 4699.59 | JOB NO. 12899 | PART NO. 12899-00600-MN | DWG NO. 12899-00600

CUST NAME: GREENVILLE UTILITIES STEEL STRUCTURES- NC

STR #: 48 TYPE/CLASS-HEIGHT: 90'-0"

DESCRIPTION: STRUCTURE, 52.44" X 25.00" X 90'-0"

SCALE: NTS DO NOT SCALE DRAWING

REV. 1 | SHEET: 1 of 6

THIS DWG IS PROPERTY OF CHM INDUSTRIES AND CONTAINS PROPRIETARY INFORMATION WHICH MAY NOT BE COPIED OR REPRODUCED WITHOUT PRIOR WRITTEN CONSENT FROM CHM INDUSTRIES.

FINISH:	BLACK WEIGHT	GALVANIZED WEIGHT
GALVANIZED	12161 LBS	12891 LBS
WEIGHTS ABOVE INCLUDE ALL BOM ITEMS		

SEE GENERAL NOTES AND DETAILS SHEET FOR SUPPLEMENTARY INFORMATION

ITEM #	PART #	DESCRIPTION	MAT'L	QTY.
1	12899-00600-SHB	SHAFT, 12S, 52.44" X 37.63" X 7/16" X 47'-6"	A572 GR65	1
2	12899-00600-BSP	BASE PLATE, Ø66 1/2" X 3 1/2"	A572 GR50	1
3	12899-00600-VS209	VANG, OBROUND, 2-SIDED, 48 1/2" X 3" X 5/8"	A572 GR65	1
4	12899-00600-VS210	VANG, OBROUND, 2-SIDED, 48 11/16" X 3" X 5/8"	A572 GR65	1
5	12899-00600-VS211	VANG, OBROUND, 2-SIDED, 48 13/16" X 3" X 5/8"	A572 GR65	1
6	12899-00600-VS212	VANG, OBROUND, 2-SIDED, 48 15/16" X 3" X 5/8"	A572 GR65	1
7	43026	NUT, HEAVY HEX, 1-8, A563 DH3	A563-DH3	4
8	43010	NUT, HEAVY HEX, 1/2-13, HDG, A563 DH	A563-DH	1
9	B22011	4X4 ID TAG, A588	A588	1

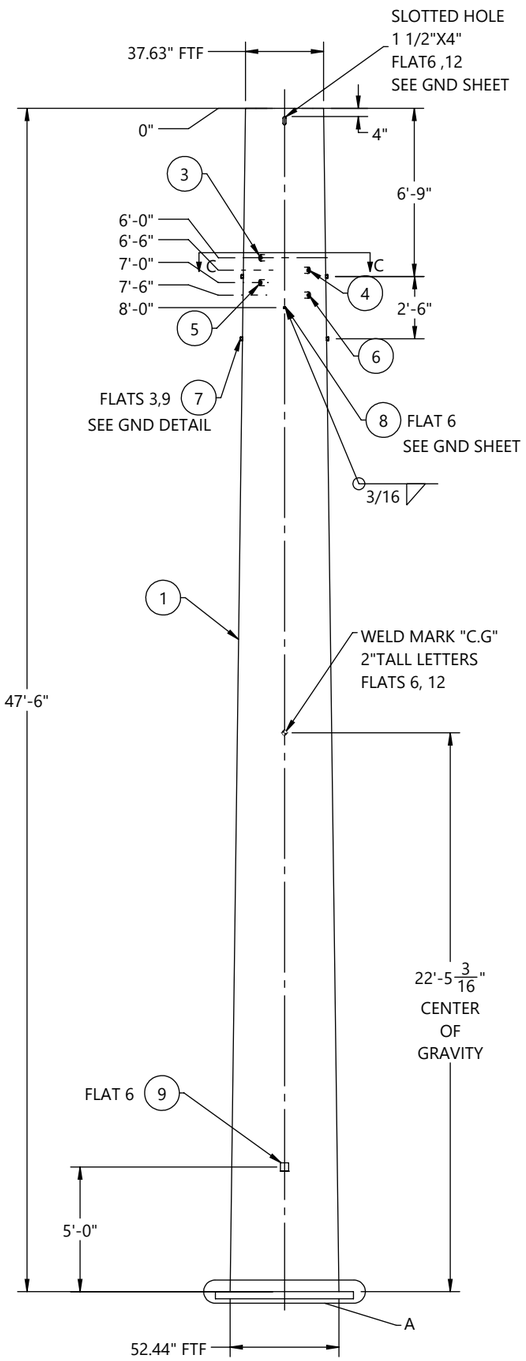

FRONT VIEW
(LOOKING @ 0˚ REF
ORIENTATION DETAIL)

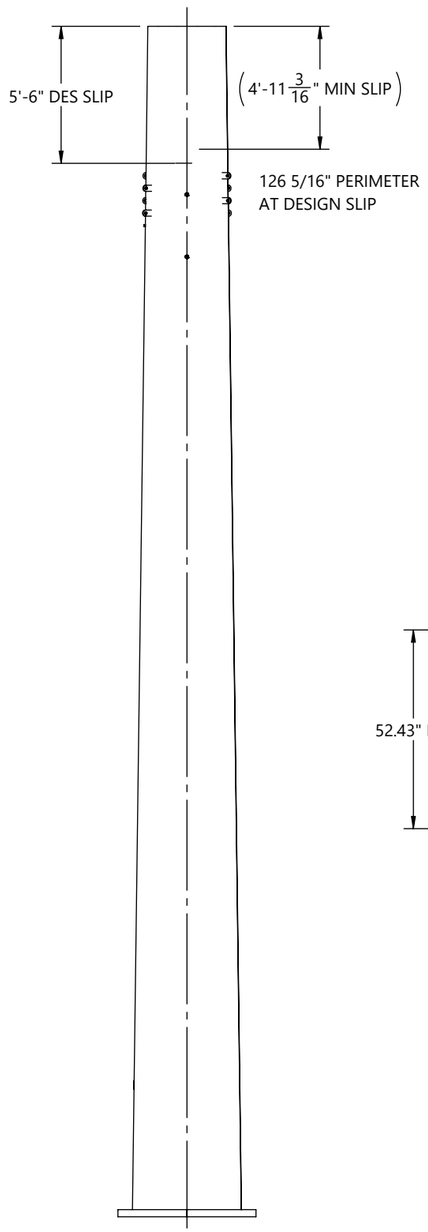

SIDE VIEW
(LOOKING @ 270˚ REF
ORIENTATION DETAIL)

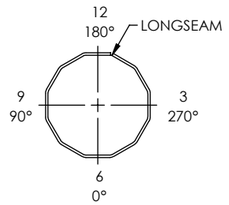

ORIENTATION DETAIL
TOP VIEW

GREENVILLE UTILITIES STEEL STRUCTURES- NC
STR HT: 90'-0"
GLM: 4699.59 FT-K
STR WT: 33672 LBS
SEC WT: 12891 LBS
DOM: [mm/YYYY]
CHM-12899-00600
12899-00600-BOT

ID TAG

TEXT TO BE 7/16" LETTERS
TAGS TO BE ORIENTED ON 0° FLAT
WEIGHT ON ID TAG IS FINISHED GALV. WEIGHT

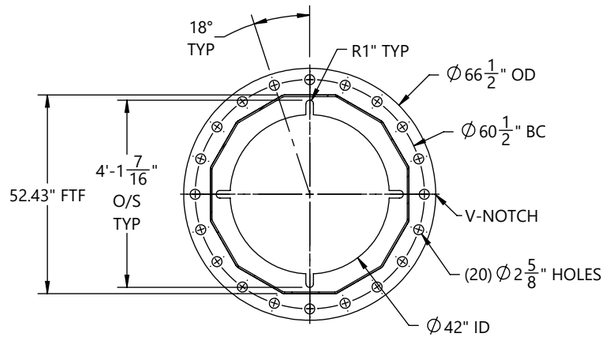

SECTION B-B

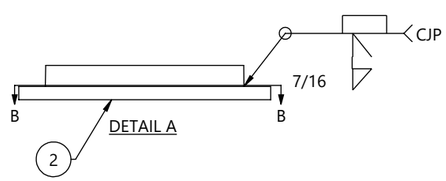

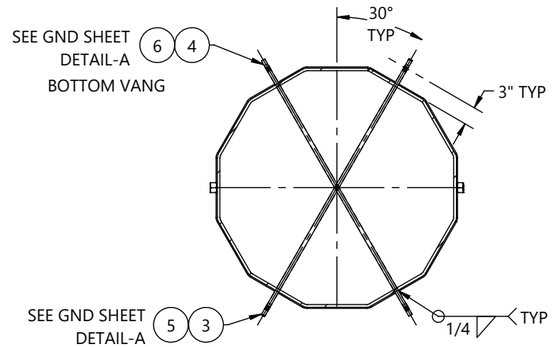

SECTION C-C

BY		DATE
DRAWN:	KB	07/03/2026
CHK'D:	EV	07/03/2026

REV.	ECR #	DESCRIPTION	APPROVED BY	DATE
1		SUBMITTAL FOR APPROVAL	EV	07/03/2026

REVISIONS

CHM INDUSTRIES
700 E. McLEROY BLVD
SAGINAW, TEXAS 76179
682.286.0046 PH
682.286.0086 FX
CHMINDUSTRIES.COM

(SEE CHM IND., INC. PROCEDURE CHM-PR-1.7.3-F1 FOR STANDARD TOLERANCES)

QTY: 1 | GLM: (FT-K) 4699.59 | JOB NO. 12899 | PART NO. 12899-00600-BOT | DWG NO. 12899-00600

CUST NAME: GREENVILLE UTILITIES STEEL STRUCTURES- NC
STR #: 48 TYPE/CLASS-HEIGHT: 90'-0"
DESCRIPTION: BOTTOM SECTION, 52.44" X 37.63" X 7/16" X 47'-6"

SCALE: NTS DO NOT SCALE DRAWING
REV.: 1 SHEET: 2 of 6

THIS DWG IS PROPERTY OF CHM INDUSTRIES AND CONTAINS PROPRIETARY INFORMATION WHICH MAY NOT BE COPIED OR REPRODUCED WITHOUT PRIOR WRITTEN CONSENT FROM CHM INDUSTRIES.

FINISH:	BLACK WEIGHT	GALVANIZED WEIGHT
GALVANIZED	4902 LBS	5196 LBS
WEIGHTS ABOVE INCLUDE ALL BOM ITEMS		

SEE GENERAL NOTES AND DETAILS SHEET FOR SUPPLEMENTARY INFORMATION

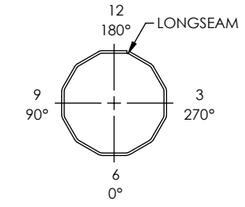

ORIENTATION DETAIL
TOP VIEW

GREENVILLE UTILITIES STEEL STRUCTURES- NC
STR HT: 48 90'-0"
SEC WT: 5196 LBS
DOM: [mm/YYYY]
CHM-12899-00600
12899-00600-TOP

ID TAG

TEXT TO BE 3/8" LETTERS
TAGS TO BE ORIENTED ON 0° FLAT
WEIGHT ON ID TAG IS FINISHED GALV. WEIGHT

ITEM #	PART #	DESCRIPTION	MAT'L	QTY.
1	12899-00600-SHT	SHAFT, 12S, 39.97" X 25.00" X 1/4" X 48'-0"	A572 GR65	1
2	12899-00600-TS	TOP STRAP, 24 3/8" X 2" X 3/16"	A572 GR65	1
3	12899-00600-CP	COVER PLATE, Ø26 7/8" X 3/16"	A572 GR65	1
4	12899-00600-VS201	VANG, OBROUND, 2-SIDED, 34 1/8" X 3" X 5/8"	A572 GR65	1
5	12899-00600-VS202	VANG, OBROUND, 2-SIDED, 34 5/16" X 3" X 5/8"	A572 GR65	1
6	12899-00600-VS203	VANG, OBROUND, 2-SIDED, 36 5/8" X 3" X 3/4"	A572 GR65	1
7	12899-00600-VS204	VANG, OBROUND, 2-SIDED, 36 7/8" X 3" X 3/4"	A572 GR65	1
8	12899-00600-VS205	VANG, OBROUND, 2-SIDED, 39 1/16" X 3" X 3/4"	A572 GR65	1
9	12899-00600-VS206	VANG, OBROUND, 2-SIDED, 39 3/8" X 3" X 3/4"	A572 GR65	1
10	12899-00600-VS207	VANG, OBROUND, 2-SIDED, 41 1/2" X 3" X 3/4"	A572 GR65	1
11	12899-00600-VS208	VANG, OBROUND, 2-SIDED, 41 13/16" X 3" X 3/4"	A572 GR65	1
12	12899-00600-THP101	VANG, RECTANGLE, 2-SIDED, 44 15/16" X 12" X 3/4"	A572 GR65	2
13	12899-00600-THP102	VANG, RECTANGLE, 2-SIDED, 47 1/2" X 12" X 3/4"	A572 GR65	2
14	42120	BOLT, 1/2-13 X 1-3/4", HDG, HH, A307 A	A307-A	1
15	44018	WASHER, FLAT, 1/2", HDG, F436 T1	F436-T1	1
16	43029	NUT, HEX, 1/2-13, BLK, A563 DH	A563-DH	1
17	43026	NUT, HEAVY HEX, 1-8, A563 DH3	A563-DH3	4
18	B22011	4X4 ID TAG, A588	A588	1
19	43010	NUT, HEAVY HEX, 1/2-13, HDG, A563 DH	A563-DH	1

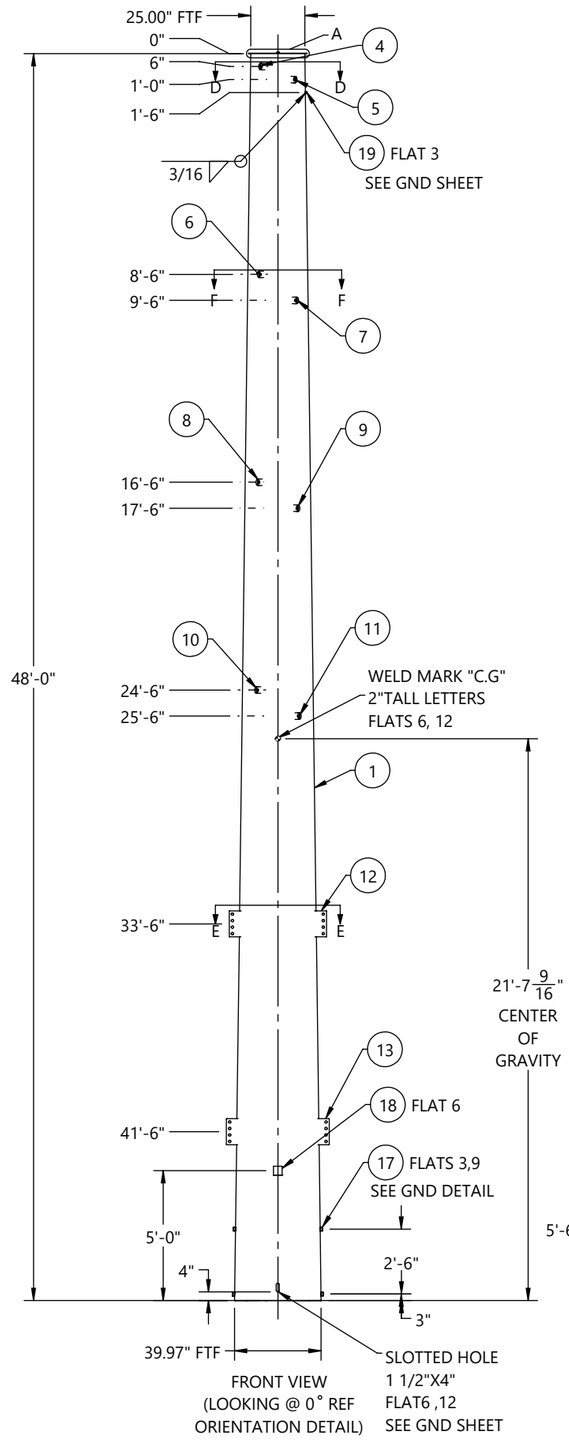

FRONT VIEW
(LOOKING @ 0° REF
ORIENTATION DETAIL)

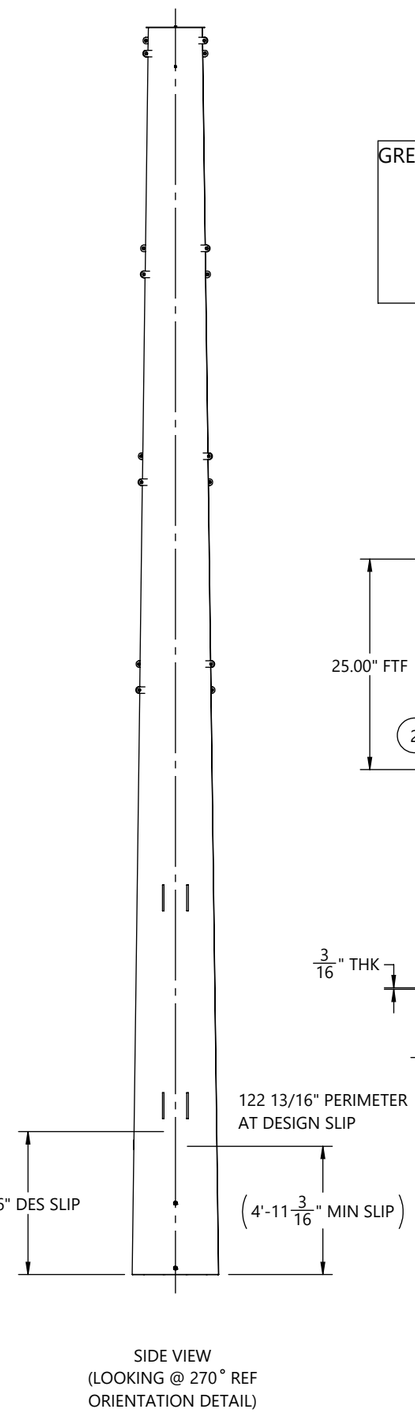

SIDE VIEW
(LOOKING @ 270° REF
ORIENTATION DETAIL)

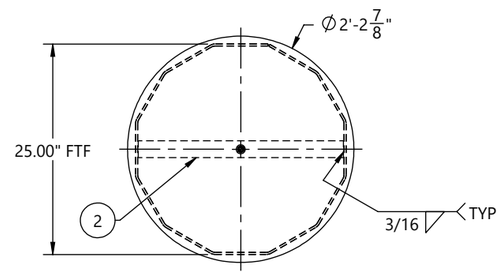

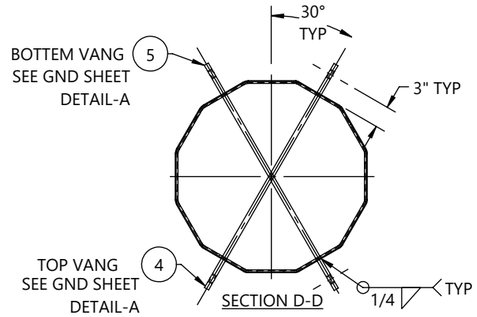

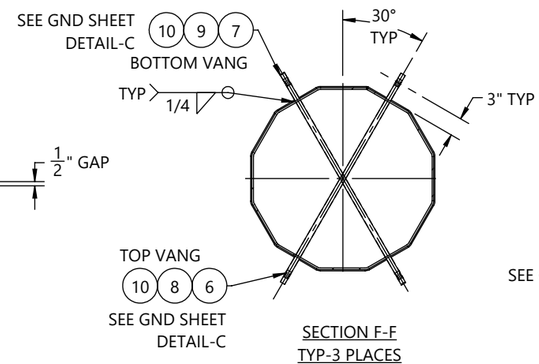

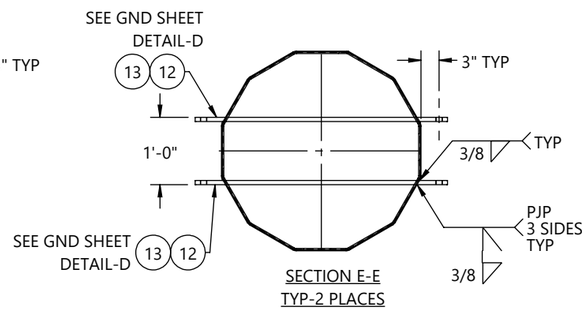

HOLE CHART		
HOLE SIZE (INCH)	DISTANCE FROM TOP OF SHAFT	FLAT(S)
13/16	10'-0"	3,9
13/16	11'-0"	3,9
13/16	18'-0"	3,9
13/16	19'-0"	3,9
13/16	26'-0"	3,9
13/16	27'-0"	3,9

REV.	ECR #	DESCRIPTION	APPROVED BY	DATE
1		SUBMITTAL FOR APPROVAL	EV	07/03/2026

REVISIONS

BY		DATE
DRAWN:	KB	07/03/2026
CHK'D:	EV	07/03/2026

CHM INDUSTRIES
700 E. McLEROY BLVD
SAGINAW, TEXAS 76179
682.286.0046 PH
682.286.0086 FX
CHMINDUSTRIES.COM

(SEE CHM IND., INC. PROCEDURE CHM-PR-1.7.3-F1 FOR STANDARD TOLERANCES)

QTY: 1 | GLM: (FT-K) 4699.59 | JOB NO. 12899 | PART NO. 12899-00600-TOP | DWG NO. 12899-00600

CUST NAME: GREENVILLE UTILITIES STEEL STRUCTURES- NC
STR #: 48 TYPE/CLASS-HEIGHT: 90'-0"
DESCRIPTION: TOP SECTION, 39.97" X 25.00" X 1/4" X 48'-0"

SCALE: NTS
DO NOT SCALE DRAWING
REV: 1 SHEET: 3 of 6

THIS DWG IS PROPERTY OF CHM INDUSTRIES AND CONTAINS PROPRIETARY INFORMATION WHICH MAY NOT BE COPIED OR REPRODUCED WITHOUT PRIOR WRITTEN CONSENT FROM CHM INDUSTRIES.

FINISH:	BLACK WEIGHT	GALVANIZED WEIGHT
GALVANIZED	11951 LBS	12668 LBS
WEIGHTS ABOVE INCLUDE ALL BOM ITEMS		

SEE GENERAL NOTES AND DETAILS SHEET FOR SUPPLEMENTARY INFORMATION

ITEM #	PART #	DESCRIPTION	MAT'L	QTY.
1	12899-00600-SHS	SHAFT, 12S, 51.00" X 51.00" X 1/2" X 30'-0"	A572 GR65	1
2	12899-00600-SHG	GND SLV HALF, 12S, 51.38" X 51.38" X 3/16" X 7'-6"	A572 GR65	2
3	12899-00600-BSP02	BASE PLATE, Ø73 1/2" X 3 1/2"	A572 GR50	1
4	12899-00600-PLT01	DRIVING EAR, 1'-0" X 1'-0" X 1 1/2"	A572 GR65	2
5	43010	NUT, HEAVY HEX, 1/2-13, HDG, A563 DH	A563-DH	6

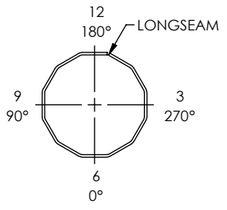

ORIENTATION DETAIL
TOP VIEW

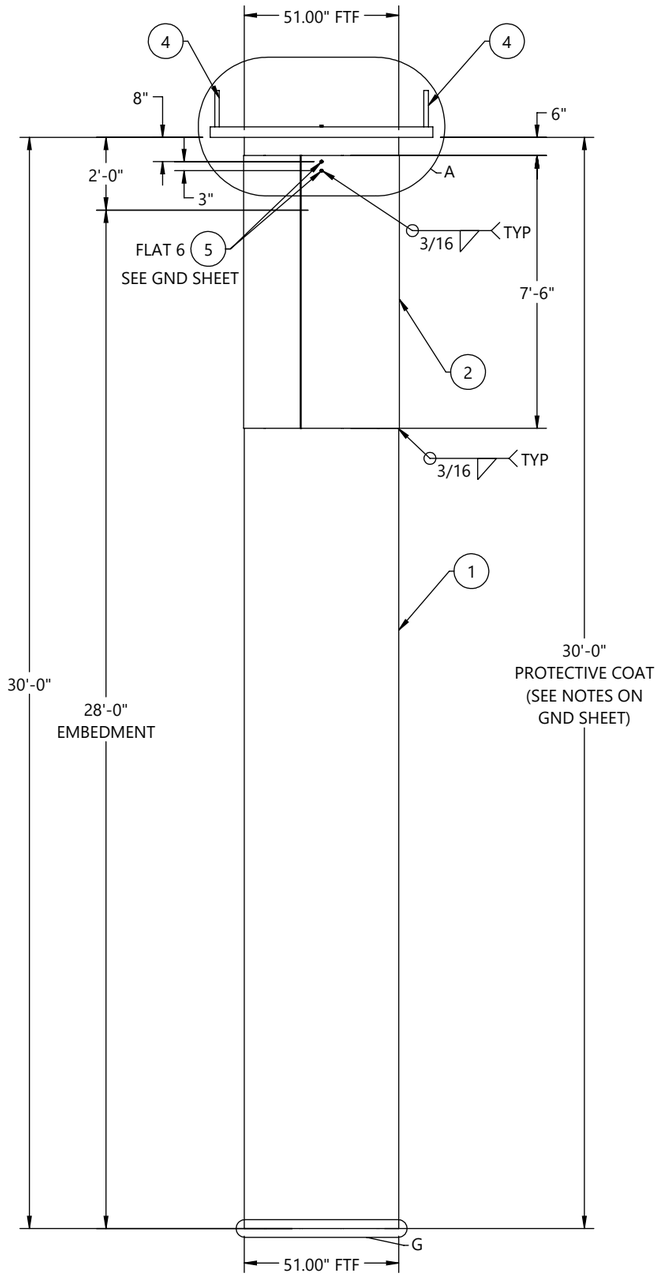

FRONT VIEW
(LOOKING @ 0° REF
ORIENTATION DETAIL)

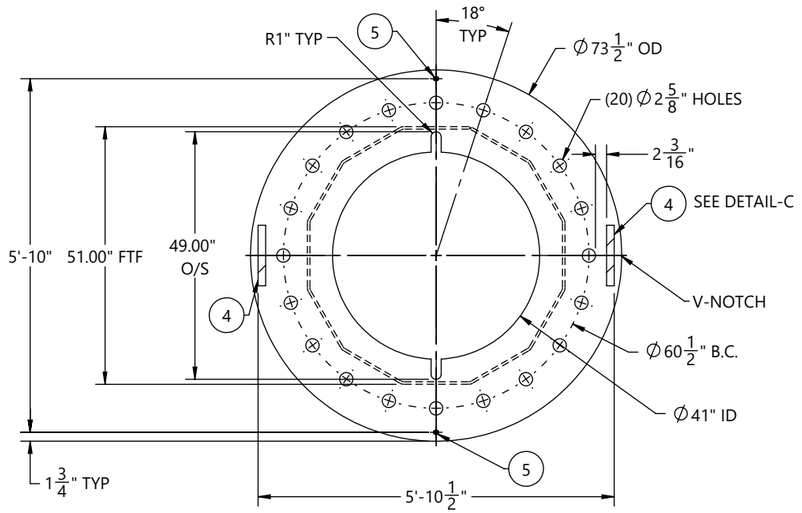

SECTION B-B

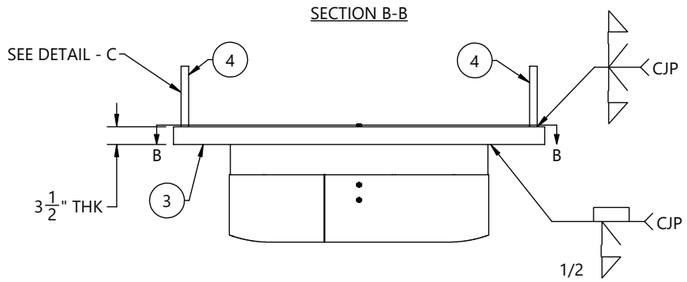

DETAIL A

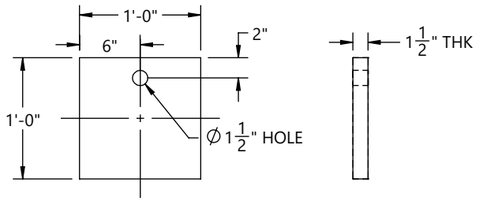

SECTION C

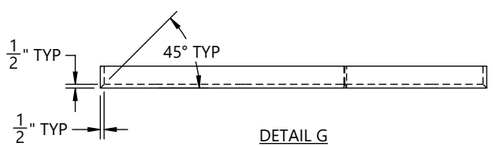

DETAIL G

BY		DATE
DRAWN:	KB	07/03/2026
CHK'D:	EV	07/03/2026

1		SUBMITTED FOR APPROVAL	EV	06/26/2026
REV.	ECR #	DESCRIPTION	APPROVED BY	DATE

REVISIONS

CHM INDUSTRIES
700 E. McLEROY BLVD
SAGINAW, TEXAS 76179
682.286.0046 PH
682.286.0086 FX
CHMINDUSTRIES.COM

(SEE CHM IND., INC. PROCEDURE CHM-PR-1.7.3-F1 FOR STANDARD TOLERANCES)

QTY: 1 | GLM: (FT-K) 4699.59 | JOB NO. 12899 | PART NO. 12899-00600-CAS | DWG NO. 12899-00600

CUST NAME: GREENVILLE UTILITIES STEEL STRUCTURES- NC
STR #: 48 TYPE/CLASS-HEIGHT: 90'-0"
DESCRIPTION: CAISSON, 51.00" X 51.00" X 1/2" X 30'-0"

SCALE: NTS
DO NOT SCALE DRAWING
REV.: 1 SHEET: 4 of 6

THIS DWG IS PROPERTY OF CHM INDUSTRIES AND CONTAINS PROPRIETARY INFORMATION WHICH MAY NOT BE COPIED OR REPRODUCED WITHOUT PRIOR WRITTEN CONSENT FROM CHM INDUSTRIES.

SEE GENERAL NOTES AND DETAILS SHEET FOR SUPPLEMENTARY INFORMATION

INDIVIDUAL STRUCTURE BILL OF MATERIALS			
ITEM NO.	PART NUMBER	DESCRIPTION	QTY.
1	12899-00600-BOT	BOTTOM SECTION, 52.44" X 37.63" X 7/16" X 47'-6"	1
1.1	12899-00600-SHB	SHAFT, 12S, 52.44" X 37.63" X 7/16" X 47'-6"	1
1.2	12899-00600-BSP	BASE PLATE, Ø66 1/2" X 3 1/2"	1
1.3	B22011	4X4 ID TAG, A588	1
1.4	43010	NUT, HEAVY HEX, 1/2-13, HDG, A563 DH	1
1.5	43026	NUT, HEAVY HEX, 1-8, A563 DH3	4
1.6	12899-00600-VS209	VANG, OBROUND, 2-SIDED, 48 1/2" X 3" X 5/8"	1
1.7	12899-00600-VS210	VANG, OBROUND, 2-SIDED, 48 11/16" X 3" X 5/8"	1
1.8	12899-00600-VS211	VANG, OBROUND, 2-SIDED, 48 13/16" X 3" X 5/8"	1
1.9	12899-00600-VS212	VANG, OBROUND, 2-SIDED, 48 15/16" X 3" X 5/8"	1
2	12899-00600-TOP	TOP SECTION, 39.97" X 25.00" X 1/4" X 48'-0"	1
2.1	12899-00600-SHT	SHAFT, 12S, 39.97" X 25.00" X 1/4" X 48'-0"	1
2.2	12899-00600-TS	TOP STRAP, 24 3/8" X 2" X 3/16"	1
2.3	12899-00600-VS201	VANG, OBROUND, 2-SIDED, 34 1/8" X 3" X 5/8"	1
2.4	12899-00600-VS202	VANG, OBROUND, 2-SIDED, 34 5/16" X 3" X 5/8"	1
2.5	12899-00600-VS203	VANG, OBROUND, 2-SIDED, 36 5/8" X 3" X 3/4"	1
2.6	12899-00600-VS204	VANG, OBROUND, 2-SIDED, 36 7/8" X 3" X 3/4"	1
2.7	12899-00600-VS205	VANG, OBROUND, 2-SIDED, 39 1/16" X 3" X 3/4"	1
2.8	12899-00600-VS206	VANG, OBROUND, 2-SIDED, 39 3/8" X 3" X 3/4"	1
2.9	12899-00600-VS207	VANG, OBROUND, 2-SIDED, 41 1/2" X 3" X 3/4"	1
2.10	12899-00600-VS208	VANG, OBROUND, 2-SIDED, 41 13/16" X 3" X 3/4"	1
2.11	B22011	4X4 ID TAG, A588	1
2.12	43026	NUT, HEAVY HEX, 1-8, A563 DH3	4
2.13	43029	NUT, HEX, 1/2-13, BLK, A563 DH	1
2.14	12899-00600-CP	COVER PLATE, Ø26 7/8" X 3/16"	1
2.15	42120	BOLT, 1/2-13 X 1-3/4", HDG, HH, A307 A	1
2.16	44018	WASHER, FLAT, 1/2", HDG, F436 T1	1
2.17	12899-00600-THP101	VANG, RECTANGLE, 2-SIDED, 44 15/16" X 12" X 3/4"	2

INDIVIDUAL STRUCTURE BILL OF MATERIALS			
ITEM NO.	PART NUMBER	DESCRIPTION	QTY.
2.18	12899-00600-THP102	VANG, RECTANGLE, 2-SIDED, 47 1/2" X 12" X 3/4"	2
2.19	43010	NUT, HEAVY HEX, 1/2-13, HDG, A563 DH	1
3	12899-00002-ARM	SHAFT, ARM, 8S, 9.00" X 8.50" X 1/4" X 6'-6"	4
3.1	12899-00002-SHA	SHAFT, ARM, 8S, 9.00" X 8.50" X 1/4" X 6'-6"	1
3.2	12899-00002-AMB	ARM MOUNT BRACKET, 14 1/8" X 12" X 6 3/4" X 1"	1
3.3	12899-00002-EP	ARM END PLATE, Ø10 3/16" X 3/4"	1
3.4	12899-00002-VS202	VANG, OBROUND, 2-SIDED, 17 13/16" X 3" X 3/4"	1
3.5	12899-00002-BKT02	BRACKET, 5 1/2" X 4" X 3" X 1/2"	2
3.6	12899-00002-VS201	VANG, OBROUND, 2-SIDED, 17 9/16" X 3" X 3/4"	1
3.7	12899-00002-VS101	VANG, OBROUND, 1-SIDED, 3.0 X 2 1/2" X 3/4"	1
3.8	43010	NUT, HEAVY HEX, 1/2-13, HDG, A563 DH	2
3.9	12899-00002-GRT	EXP. METAL, 7 7/8" X 5" X .125"	1
4	43031	NUT, LOCK, ANCO, 1-8, HDG, A563 DH	32
5	44044	WASHER, FLAT, 1", HDG, F436 T1	64
6	42130	BOLT, HEAVY, 1-8 X 3-1/2", HDG, HH, A325 T1	32
7	12899-00600-CAS	CAISSON, 51.00" X 51.00" X 1/2" X 30'-0"	1
7.1	12899-00600-SNG	SINGLE SECTION, 51.00" X 51.00" X 1/2" X 30'-0"	1
7.1.1	12899-00600-SHS	SHAFT, 12S, 51.00" X 51.00" X 1/2" X 30'-0"	1
7.1.2	12899-00600-SHG	GND SLV HALF, 12S, 51.38" X 51.38" X 3/16" X 7'-6"	2
7.1.3	43010	NUT, HEAVY HEX, 1/2-13, HDG, A563 DH	6
7.1.4	12899-00600-BSP02	BASE PLATE, Ø73 1/2" X 3 1/2"	1
7.1.5	12899-00600-PLT01	DRIVING EAR, 1'-0" X 1'-0" X 1 1/2"	2
8	12899-00600-AB	ANCHOR BOLT, Ø2 1/4" X 4'-0", A-615	20
9	43035	NUT, HEAVY HEX, 2 1/4-4.5, HDG, A563 DH	80
10	44070	WASHER, FLAT, 2-1/4", HDG, F436 T1	20

REV.	ECR #	DESCRIPTION	APPROVED BY	DATE
1		SUBMITTED FOR APPROVAL	EV	07/03/2026

REVISIONS

BY		DATE
DRAWN:	KB	07/03/2026
CHK'D:	EV	07/03/2026

CHM INDUSTRIES

700 E. McLEROY BLVD
SAGINAW, TEXAS 76179
682.286.0046 PH
682.286.0086 FX
CHMINDUSTRIES.COM

(SEE CHM IND., INC. PROCEDURE CHM-PR-1.7.3-F1 FOR STANDARD TOLERANCES)

QTY: 1 | GLM: (FT-K) 4699.59 | JOB NO. 12899 | PART NO. 12899-00600-SBOM | DWG NO. 12899-00600

CUST NAME: GREENVILLE UTILITIES STEEL STRUCTURES- NC

STR #: 48 TYPE/CLASS-HEIGHT: 90'-0"

DESCRIPTION: STRUCTURE, 52.44" X 25.00" X 90'-0"

SCALE: NTS DO NOT SCALE DRAWING

REV. 1 | SHEET: 5 of 6

THIS DWG IS PROPERTY OF CHM INDUSTRIES AND CONTAINS PROPRIETARY INFORMATION WHICH MAY NOT BE COPIED OR REPRODUCED WITHOUT PRIOR WRITTEN CONSENT FROM CHM INDUSTRIES.

SEE GENERAL NOTES AND DETAILS SHEET FOR SUPPLEMENTARY INFORMATION

TOTAL JOB MATERIAL REQUIREMENTS				
ITEM NO.	PART NUMBER	DESCRIPTION	QTY.	JOB QTY.
1	12899-00600-SHB	SHAFT, 12S, 52.44" X 37.63" X 7/16" X 47'-6"	1	1
2	12899-00600-BSP	BASE PLATE, Ø66 1/2" X 3 1/2"	1	1
3	B22011	4X4 ID TAG, A588	2	2
4	43026	NUT, HEAVY HEX, 1-8, A563 DH3	8	8
5	12899-00600-VS209	VANG, OBROUND, 2-SIDED, 48 1/2" X 3" X 5/8"	1	1
6	12899-00600-VS210	VANG, OBROUND, 2-SIDED, 48 11/16" X 3" X 5/8"	1	1
7	12899-00600-VS211	VANG, OBROUND, 2-SIDED, 48 13/16" X 3" X 5/8"	1	1
8	12899-00600-VS212	VANG, OBROUND, 2-SIDED, 48 15/16" X 3" X 5/8"	1	1
9	12899-00600-SHT	SHAFT, 12S, 39.97" X 25.00" X 1/4" X 48'-0"	1	1
10	12899-00600-TS	TOP STRAP, 24 3/8" X 2" X 3/16"	1	1
11	12899-00600-VS201	VANG, OBROUND, 2-SIDED, 34 1/8" X 3" X 5/8"	1	1
12	12899-00600-VS202	VANG, OBROUND, 2-SIDED, 34 5/16" X 3" X 5/8"	1	1
13	12899-00600-VS203	VANG, OBROUND, 2-SIDED, 36 5/8" X 3" X 3/4"	1	1
14	12899-00600-VS204	VANG, OBROUND, 2-SIDED, 36 7/8" X 3" X 3/4"	1	1
15	12899-00600-VS205	VANG, OBROUND, 2-SIDED, 39 1/16" X 3" X 3/4"	1	1
16	12899-00600-VS206	VANG, OBROUND, 2-SIDED, 39 3/8" X 3" X 3/4"	1	1
17	12899-00600-VS207	VANG, OBROUND, 2-SIDED, 41 1/2" X 3" X 3/4"	1	1
18	12899-00600-VS208	VANG, OBROUND, 2-SIDED, 41 13/16" X 3" X 3/4"	1	1
19	12899-00600-CP	COVER PLATE, Ø26 7/8" X 3/16"	1	1
20	42120	BOLT, 1/2-13 X 1-3/4", HDG, HH, A307 A	1	1
21	44018	WASHER, FLAT, 1/2", HDG, F436 T1	1	1
22	12899-00600-THP101	VANG, RECTANGLE, 2-SIDED, 44 15/16" X 12" X 3/4"	2	2
23	12899-00600-THP102	VANG, RECTANGLE, 2-SIDED, 47 1/2" X 12" X 3/4"	2	2
24	12899-00002-SHA	SHAFT, ARM, 8S, 9.00" X 8.50" X 1/4" X 6'-6"	4	4

TOTAL JOB MATERIAL REQUIREMENTS				
ITEM NO.	PART NUMBER	DESCRIPTION	QTY.	JOB QTY.
25	12899-00002-AMB	ARM MOUNT BRACKET, 14 1/8" X 12" X 6 3/4" X 1"	4	4
26	12899-00002-EP	ARM END PLATE, Ø10 3/16" X 3/4"	4	4
27	12899-00002-VS202	VANG, OBROUND, 2-SIDED, 17 13/16" X 3" X 3/4"	4	4
28	12899-00002-BKT02	BRACKET, 5 1/2" X 4" X 3" X 1/2"	8	8
29	12899-00002-VS201	VANG, OBROUND, 2-SIDED, 17 9/16" X 3" X 3/4"	4	4
30	12899-00002-VS101	VANG, OBROUND, 1-SIDED, 3.0 X 2 1/2" X 3/4"	4	4
31	12899-00002-GRT	EXP. METAL, 7 7/8" X 5" X .125"	4	4
32	44044	WASHER, FLAT, 1", HDG, F436 T1	64	64
33	43031	NUT, LOCK, ANCO, 1-8, HDG, A563 DH	32	32
34	42130	BOLT, HEAVY, 1-8 X 3-1/2", HDG, HH, A325 T1	32	32
35	12899-00600-SHS	SHAFT, 12S, 51.00" X 51.00" X 1/2" X 30'-0"	1	1
36	12899-00600-SHG	GND SLV HALF, 12S, 51.38" X 51.38" X 3/16" X 7'-6"	2	2
37	12899-00600-BSP02	BASE PLATE, Ø73 1/2" X 3 1/2"	1	1
38	12899-00600-PLT01	DRIVING EAR, 1'-0" X 1'-0" X 1 1/2"	2	2
39	12899-00600-AB	ANCHOR BOLT, Ø2 1/4" X 4'-0", A-615	20	20
40	43035	NUT, HEAVY HEX, 2 1/4-4.5, HDG, A563 DH	80	80
41	44070	WASHER, FLAT, 2-1/4", HDG, F436 T1	20	20
42	43010	NUT, HEAVY HEX, 1/2-13, HDG, A563 DH	16	16
43	43029	NUT, HEX, 1/2-13, BLK, A563 DH	1	1

REV.	ECR #	DESCRIPTION	APPROVED BY	DATE
1		SUBMITTED FOR APPROVAL	EV	07/03/2026

REVISIONS

BY		DATE
DRAWN:	KB	07/03/2026
CHK'D:	EV	07/03/2026

CHM INDUSTRIES
700 E. McLEROY BLVD
SAGINAW, TEXAS 76179
682.286.0046 PH
682.286.0086 FX
CHMINDUSTRIES.COM

(SEE CHM IND., INC. PROCEDURE CHM-PR-1.7.3-F1 FOR STANDARD TOLERANCES)

QTY: 1 | GLM: (FT-K) 4699.59 | JOB NO. 12899 | PART NO. 12899-00600-PBOM | DWG NO. 12899-00600

CUST NAME: GREENVILLE UTILITIES STEEL STRUCTURES- NC

STR #: 48 TYPE/CLASS-HEIGHT: 90'-0"

DESCRIPTION: STRUCTURE, 52.44" X 25.00" X 90'-0"

SCALE: NTS DO NOT SCALE DRAWING

REV. 1 | SHEET: 6 of 6

THIS DWG IS PROPERTY OF CHM INDUSTRIES AND CONTAINS PROPRIETARY INFORMATION WHICH MAY NOT BE COPIED OR REPRODUCED WITHOUT PRIOR WRITTEN CONSENT FROM CHM INDUSTRIES.

FINISH:	BLACK WEIGHT	GALVANIZED WEIGHT
GALVANIZED	34782 LBS	36869 LBS
WEIGHTS ABOVE INCLUDE ALL BOM ITEMS		

SEE GENERAL NOTES AND DETAILS SHEET FOR SUPPLEMENTARY INFORMATION

ITEM #	PART #	DESCRIPTION	QTY.
1	12899-00700-BOT	BOTTOM SECTION, 54.00" X 37.63" X 7/16" X 52'-6"	1
2	12899-00700-TOP	TOP SECTION, 39.97" X 25.00" X 1/4" X 48'-0"	1
3	12899-00002-ARM	SHAFT, ARM, 8S, 9.00" X 8.50" X 1/4" X 6'-6"	4
4	12899-00700-CAS	CAISSON, 53.00" X 53.00" X 36'-0"	1
5	43031	NUT, LOCK, ANCO, 1-8, HDG, A563 DH	32
6	44044	WASHER, FLAT, 1", HDG, F436 T1	64
7	42130	BOLT, HEAVY, 1-8 X 3-1/2", HDG, HH, A325 T1	32
8	12899-00700-AB	ANCHOR BOLT, Ø2 1/4" X 4'-0", A-615	20
9	43035	NUT, HEAVY HEX, 2 1/4-4.5, HDG, A563 DH	80
10	44070	WASHER, FLAT, 2-1/4", HDG, F436 T1	20

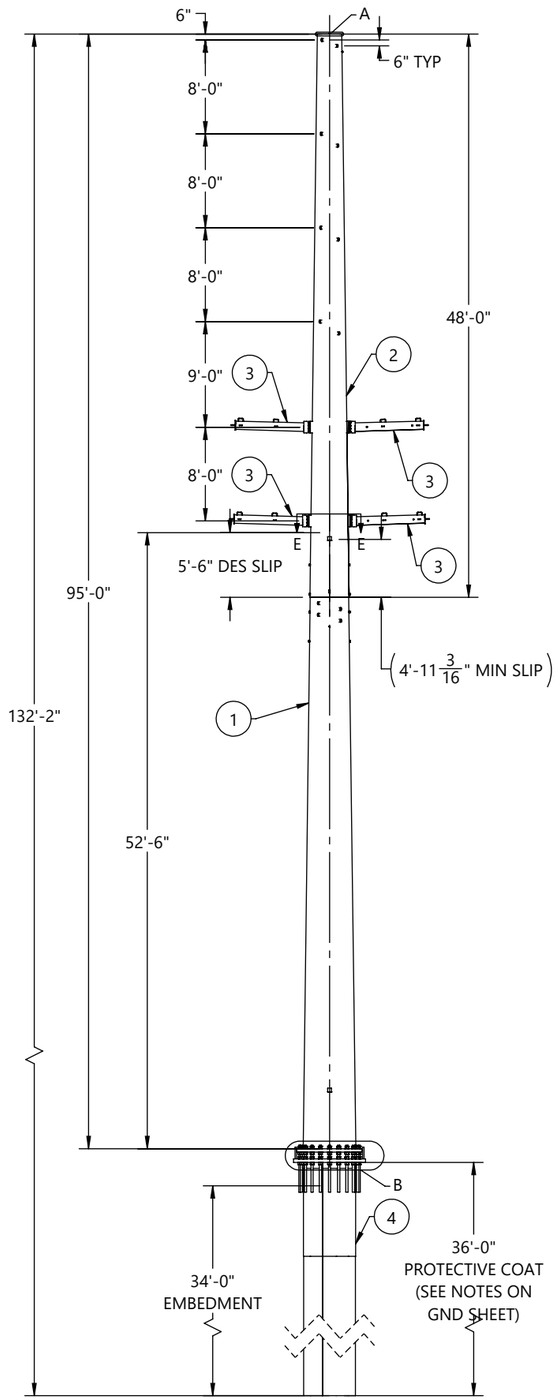

FRONT VIEW
(LOOKING @ 0° REF
ORIENTATION DETAIL)

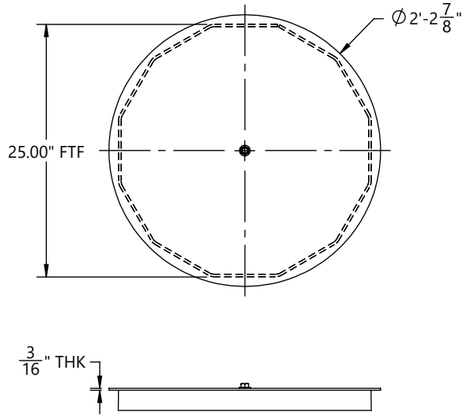

DETAIL A

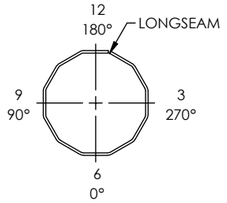

ORIENTATION DETAIL
TOP VIEW

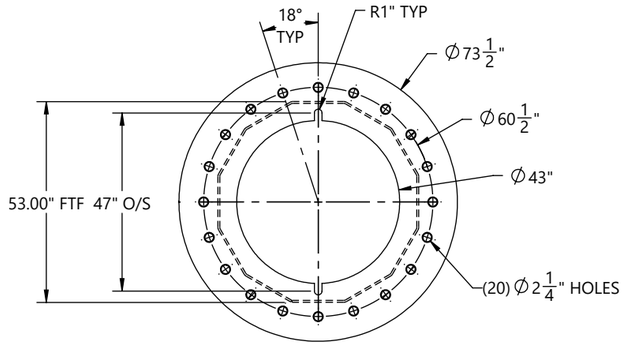

SECTION D-D

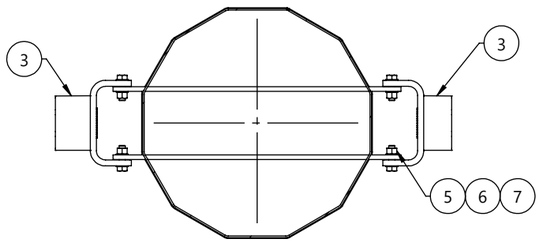

SECTION E-E
(TYP 2 PLACES)

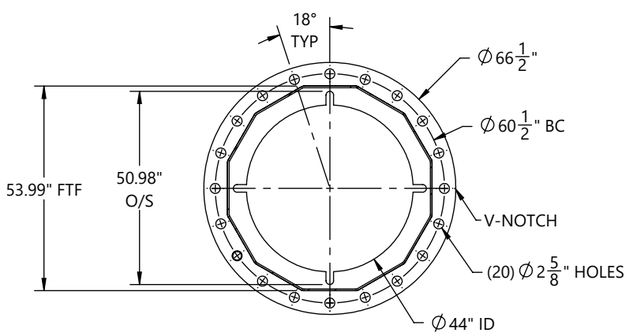

SECTION C-C

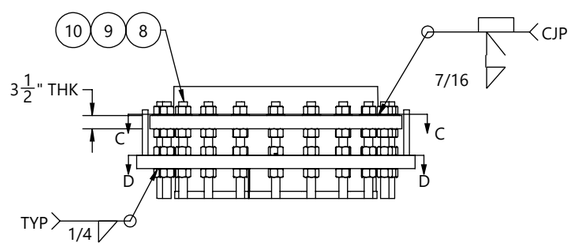

NOTE: WELD NUT
PRIOR TO BASE PLATE

DETAIL B

BY		DATE
DRAWN:	KB	07/03/2026
CHK'D:	EV	07/03/2026

REV.	ECR #	DESCRIPTION	APPROVED BY	DATE
1		SUBMITTED FOR APPROVAL	EV	07/03/2026

REVISIONS

CHM INDUSTRIES
700 E. McLEROY BLVD
SAGINAW, TEXAS 76179
682.286.0046 PH
682.286.0086 FX
CHMINDUSTRIES.COM

(SEE CHM IND., INC. PROCEDURE CHM-PR-1.7.3-F1 FOR STANDARD TOLERANCES)

QTY: 1 | GLM: (FT-K) 5089.02 | JOB NO. 12899 | PART NO. 12899-00700-MN | DWG NO. 12899-00700

CUST NAME: GREENVILLE UTILITIES STEEL STRUCTURES- NC
STR #: 49 TYPE/CLASS-HEIGHT: 95
DESCRIPTION: STRUCTURE, 54.00" X 25.00" X 95'-0"

SCALE: NTS
DO NOT SCALE DRAWING
REV. 1 | SHEET: 1 of 6

THIS DWG IS PROPERTY OF CHM INDUSTRIES AND CONTAINS PROPRIETARY INFORMATION WHICH MAY NOT BE COPIED OR REPRODUCED WITHOUT PRIOR WRITTEN CONSENT FROM CHM INDUSTRIES.

FINISH:	BLACK WEIGHT	GALVANIZED WEIGHT
GALVANIZED	13288 LBS	14085 LBS
WEIGHTS ABOVE INCLUDE ALL BOM ITEMS		

SEE GENERAL NOTES AND DETAILS SHEET FOR SUPPLEMENTARY INFORMATION

ITEM #	PART #	DESCRIPTION	MAT'L	QTY.
1	12899-00700-SHB	SHAFT, 12S, 54.00" X 37.63" X 7/16" X 52'-6"	A572 GR65	1
2	12899-00700-BSP	BASE PLATE, Ø66 1/2" X 3 1/2"	A572 GR50	1
3	12899-00700-VS209	VANG, OBROUND, 2-SIDED, 48 1/2" X 3" X 5/8"	A572 GR65	1
4	12899-00700-VS210	VANG, OBROUND, 2-SIDED, 48 11/16" X 3" X 5/8"	A572 GR65	1
5	12899-00700-VS211	VANG, OBROUND, 2-SIDED, 48 13/16" X 3" X 5/8"	A572 GR65	1
6	12899-00700-VS212	VANG, OBROUND, 2-SIDED, 48 15/16" X 3" X 5/8"	A572 GR65	1
7	B22011	4X4 ID TAG, A588	A588	1
8	43010	NUT, HEAVY HEX, 1/2-13, HDG, A563 DH	A563-DH	1
9	43026	NUT, HEAVY HEX, 1-8, A563 DH3	A563-DH3	4

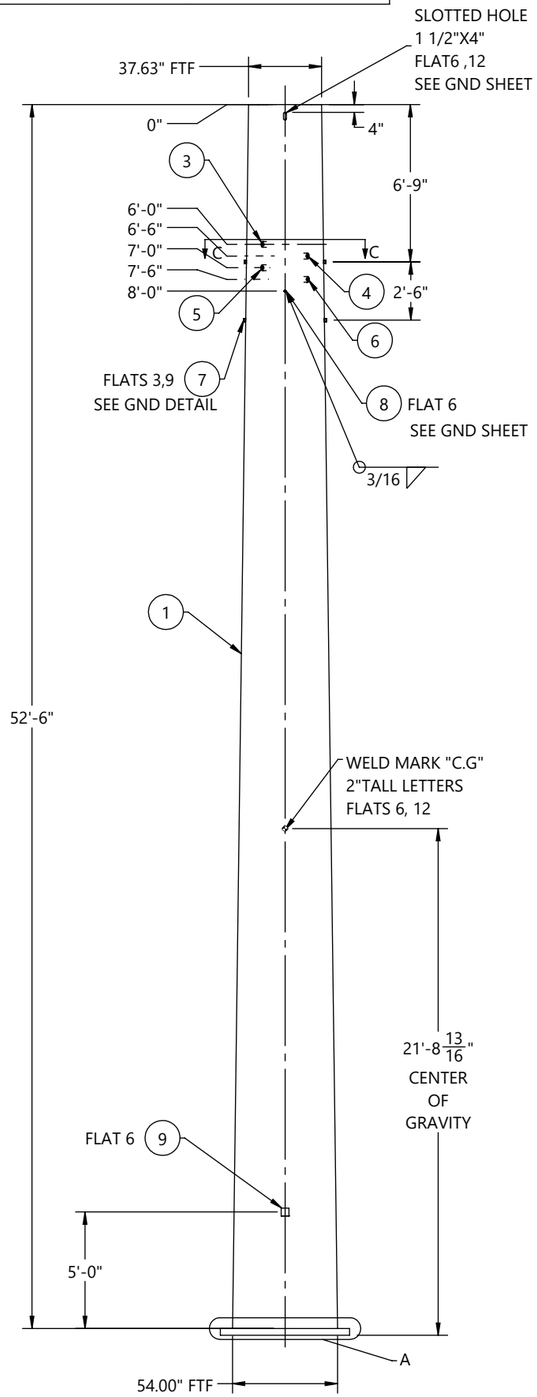

FRONT VIEW
(LOOKING @ 0° REF
ORIENTATION DETAIL)

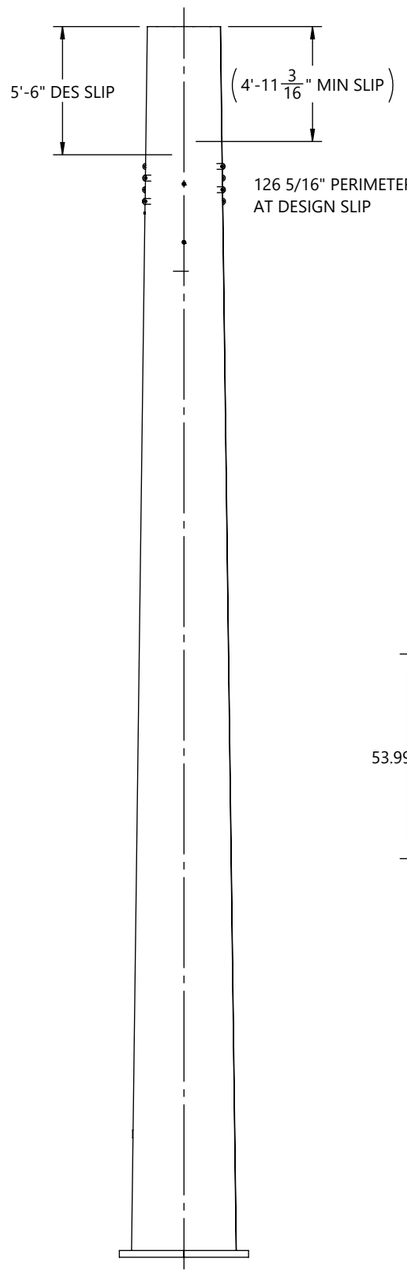

SIDE VIEW
(LOOKING @ 270° REF
ORIENTATION DETAIL)

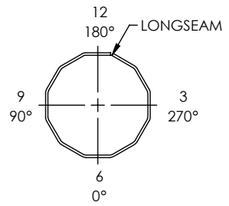

ORIENTATION DETAIL
TOP VIEW

GREENVILLE UTILITIES STEEL STRUCTURES- NC
STR HT: 95
GLM: 5089.02 FT-K
STR WT: 36869 LBS
SEC WT: 14085 LBS
DOM: [mm/YYYY]
CHM-12899-00700
12899-00700-BOT

ID TAG

TEXT TO BE 7/16" LETTERS
TAGS TO BE ORIENTED ON 0° FLAT
WEIGHT ON ID TAG IS FINISHED GALV. WEIGHT

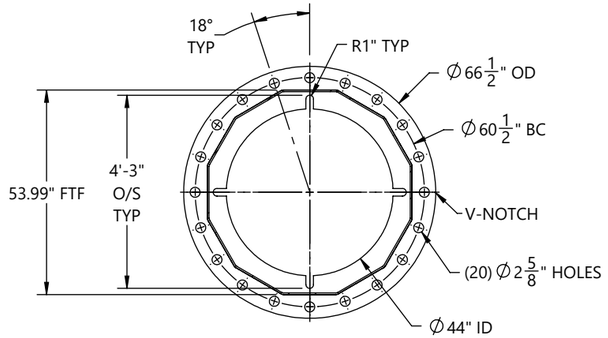

SECTION B-B

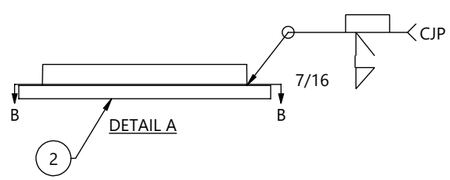

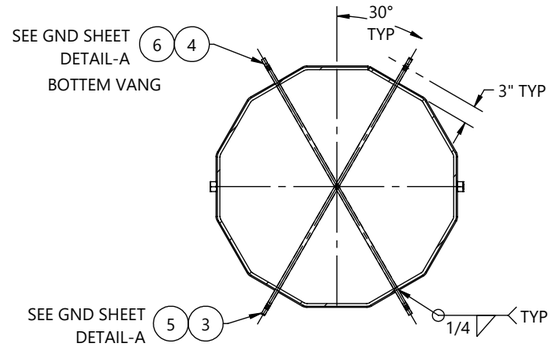

SECTION C-C

REV.	ECR #	DESCRIPTION	APPROVED BY	DATE
1		SUBMITTED FOR APPROVAL	EV	07/03/2026

REVISIONS

BY		DATE
DRAWN:	KB	07/03/2026
CHK'D:	EV	07/03/2026

CHM INDUSTRIES
700 E. McLEROY BLVD
SAGINAW, TEXAS 76179
682.286.0046 PH
682.286.0086 FX
CHMINDUSTRIES.COM
(SEE CHM IND., INC. PROCEDURE CHM-PR-1.7.3-F1 FOR STANDARD TOLERANCES)

QTY: 1 | GLM: (FT-K) 5089.02 | JOB NO. 12899 | PART NO. 12899-00700-PBOM | DWG NO. 12899-00700

CUST NAME: GREENVILLE UTILITIES STEEL STRUCTURES- NC
STR #: 49 TYPE/CLASS-HEIGHT: 95
DESCRIPTION: BOTTOM SECTION, 54.00" X 37.63" X 7/16" X 52'-6"

SCALE: NTS DO NOT SCALE DRAWING
REV.: 1 SHEET: 2 of 6

THIS DWG IS PROPERTY OF CHM INDUSTRIES AND CONTAINS PROPRIETARY INFORMATION WHICH MAY NOT BE COPIED OR REPRODUCED WITHOUT PRIOR WRITTEN CONSENT FROM CHM INDUSTRIES.

FINISH:	BLACK WEIGHT	GALVANIZED WEIGHT
GALVANIZED	4900 LBS	5194 LBS
WEIGHTS ABOVE INCLUDE ALL BOM ITEMS		

SEE GENERAL NOTES AND DETAILS SHEET FOR SUPPLEMENTARY INFORMATION

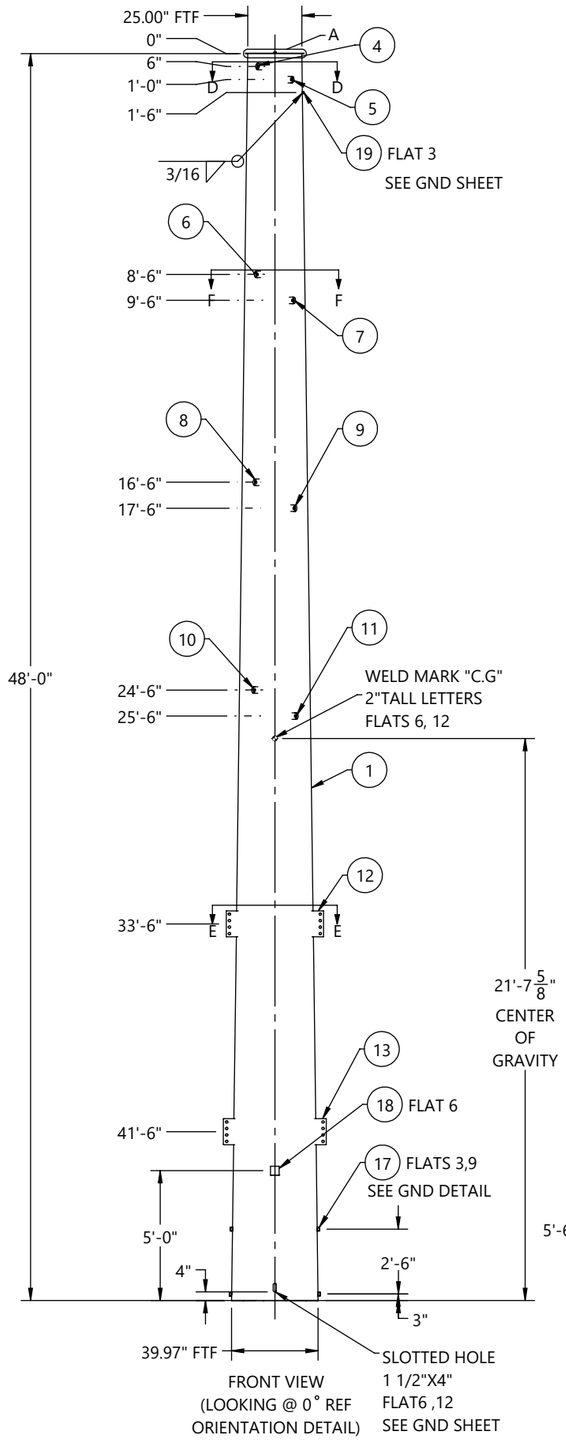

FRONT VIEW
(LOOKING @ 0˚ REF
ORIENTATION DETAIL)

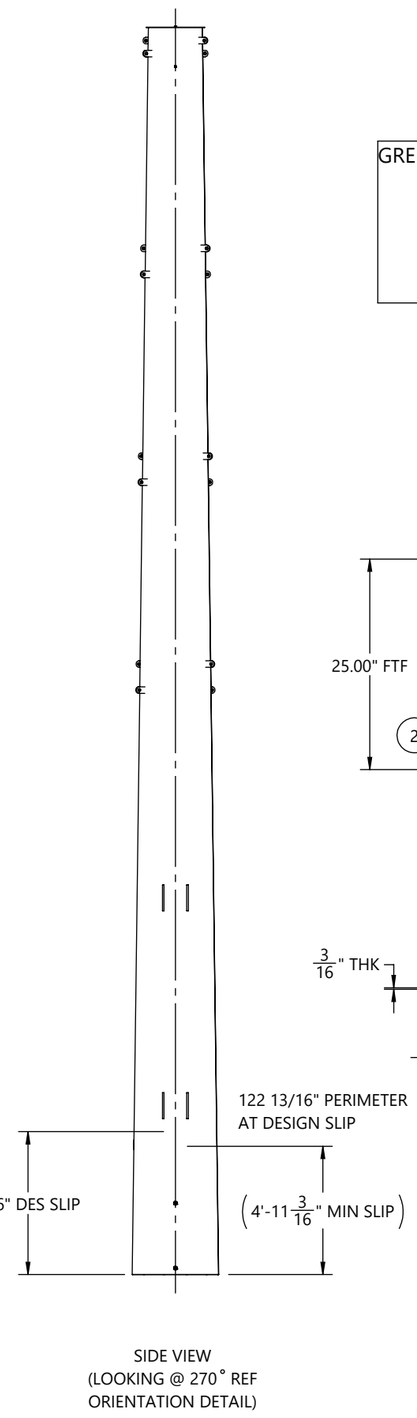

SIDE VIEW
(LOOKING @ 270˚ REF
ORIENTATION DETAIL)

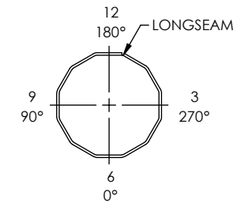

ORIENTATION DETAIL
TOP VIEW

GREENVILLE UTILITIES STEEL STRUCTURES- NC
STR HT: 49 95
SEC WT: 5194 LBS
DOM: [mm/YYYY]
CHM-12899-00700
12899-00700-TOP

ID TAG

TEXT TO BE 7/16" LETTERS
TAGS TO BE ORIENTED ON 0° FLAT
WEIGHT ON ID TAG IS FINISHED GALV. WEIGHT

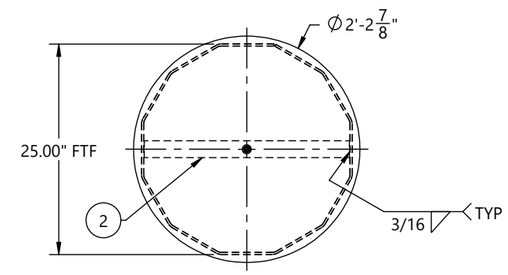

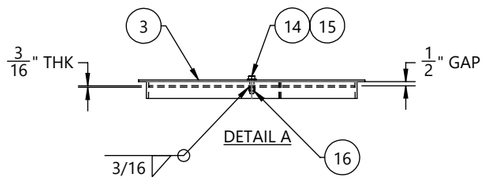

ITEM #	PART #	DESCRIPTION	MAT'L	QTY.
1	12899-00700-SHT	SHAFT, 12S, 39.97" X 25.00" X 1/4" X 48'-0"	A572 GR65	1
2	12899-00700-TS	TOP STRAP, 24 3/8" X 2" X 3/16"	A572 GR65	1
3	12899-00700-CP	COVER PLATE, Ø26 7/8" X 3/16"	A572 GR65	1
4	12899-00700-VS201	VANG, OBROUND, 2-SIDED, 34 1/8" X 3" X 5/8"	A572 GR65	1
5	12899-00700-VS202	VANG, OBROUND, 2-SIDED, 34 5/16" X 3" X 5/8"	A572 GR65	1
6	12899-00700-VS203	VANG, OBROUND, 2-SIDED, 36 5/8" X 3" X 3/4"	A572 GR65	1
7	12899-00700-VS204	VANG, OBROUND, 2-SIDED, 36 7/8" X 3" X 3/4"	A572 GR65	1
8	12899-00700-VS205	VANG, OBROUND, 2-SIDED, 39 1/16" X 3" X 3/4"	A572 GR65	1
9	12899-00700-VS206	VANG, OBROUND, 2-SIDED, 39 3/8" X 3" X 3/4"	A572 GR65	1
10	12899-00700-VS207	VANG, OBROUND, 2-SIDED, 41 1/2" X 3" X 3/4"	A572 GR65	1
11	12899-00700-VS208	VANG, OBROUND, 2-SIDED, 41 13/16" X 3" X 3/4"	A572 GR65	1
12	12899-00700-THP01	VANG, RECTANGLE, 2-SIDED, 44 15/16" X 12" X 3/4"	A572 GR65	2
13	12899-00700-THP102	VANG, RECTANGLE, 2-SIDED, 47 1/2" X 12" X 3/4"	A572 GR65	2
14	42120	BOLT, 1/2-13 X 1-3/4", HDG, HH, A307 A	A307-A	1
15	44018	WASHER, FLAT, 1/2", HDG, F436 T1	F436-T1	1
16	43029	NUT, HEX, 1/2-13, BLK, A563 DH	A563-DH	1
17	43026	NUT, HEAVY HEX, 1-8, A563 DH3	A563-DH3	4
18	B22011	4X4 ID TAG, A588	A588	1
19	43010	NUT, HEAVY HEX, 1/2-13, HDG, A563 DH	A563-DH	1

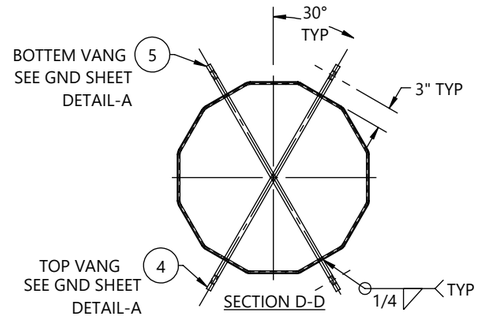

HOLE CHART		
HOLE SIZE (INCH)	DISTANCE FROM TOP OF SHAFT	FLAT(S)
5/8	1'-6"	8
13/16	10'-0"	3,9
13/16	11'-0"	3,9
13/16	18'-0"	3,9
13/16	19'-0"	3,9
13/16	26'-0"	3,9
13/16	27'-0"	3,9

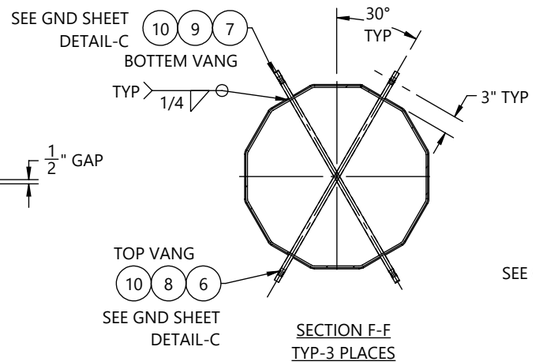

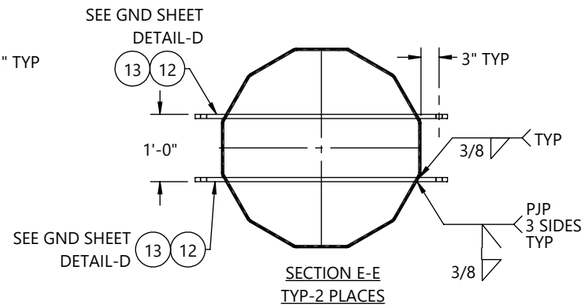

REV.	ECR #	DESCRIPTION	APPROVED BY	DATE
1		SUBMITTED FOR APPROVAL	EV	07/03/2026

REVISIONS

BY		DATE
DRAWN:	KB	07/03/2026
CHK'D:	EV	07/03/2026

CHM INDUSTRIES
700 E. McLEROY BLVD
SAGINAW, TEXAS 76179
682.286.0046 PH
682.286.0086 FX
CHMINDUSTRIES.COM
(SEE CHM IND., INC. PROCEDURE CHM-PR-1.7.3-F1 FOR STANDARD TOLERANCES)

QTY: 1 | GLM: (FT-K) 5089.02 | JOB NO. 12899 | PART NO. 12899-00700-PBOM | DWG NO. 12899-00700

CUST NAME: GREENVILLE UTILITIES STEEL STRUCTURES- NC
STR #: 49 TYPE/CLASS-HEIGHT: 95
DESCRIPTION: TOP SECTION, 39.97" X 25.00" X 1/4" X 48'-0"

SCALE: NTS
DO NOT SCALE DRAWING
REV: 1 | SHEET: 3 of 6

THIS DWG IS PROPERTY OF CHM INDUSTRIES AND CONTAINS PROPRIETARY INFORMATION WHICH MAY NOT BE COPIED OR REPRODUCED WITHOUT PRIOR WRITTEN CONSENT FROM CHM INDUSTRIES.

FINISH:	BLACK WEIGHT	GALVANIZED WEIGHT
GALVANIZED	13902 LBS	14736 LBS
WEIGHTS ABOVE INCLUDE ALL BOM ITEMS		

SEE GENERAL NOTES AND DETAILS SHEET FOR SUPPLEMENTARY INFORMATION

ITEM #	PART #	DESCRIPTION	MAT'L	QTY.
1	12899-00700-SHS	SHAFT, 12S, 53.00" X 53.00" X 1/2" X 36'-0"	A572 GR65	1
2	12899-00700-SHG	GND SLV HALF, 12S, 53.38" X 53.38" X 3/16" X 7'-6"	A572 GR65	2
3	12899-00700-BSP02	BASE PLATE, Ø73 1/2" X 3 1/2"	A572 GR50	1
4	12899-00700-PLT01	DRIVING EAR, 1'-0" X 1'-0" X 1 1/2"	A572 GR65	2
5	43010	NUT, HEAVY HEX, 1/2-13, HDG, A563 DH	A563-DH	6

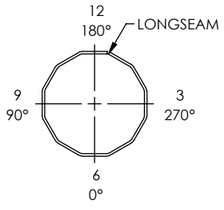

ORIENTATION DETAIL
TOP VIEW

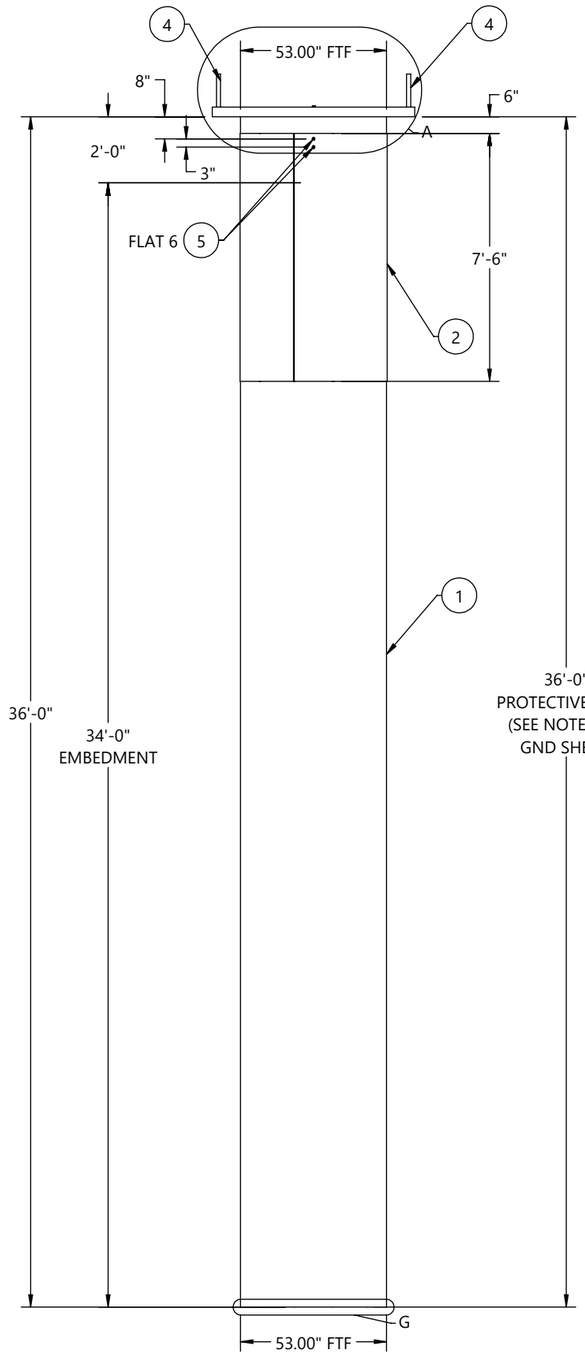

FRONT VIEW
(LOOKING @ 0° REF
ORIENTATION DETAIL)

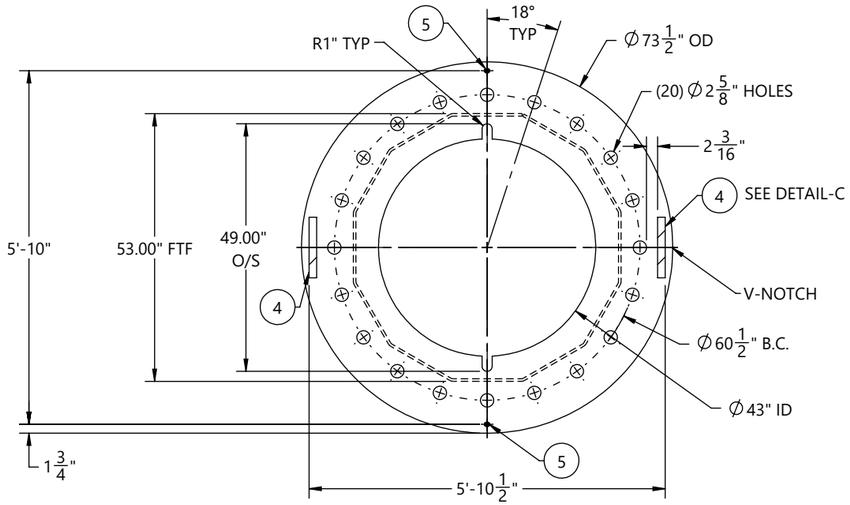

SECTION B-B

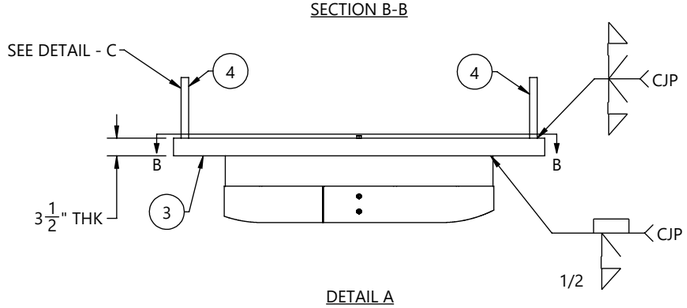

DETAIL A

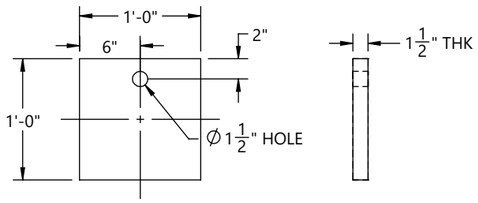

SECTION C

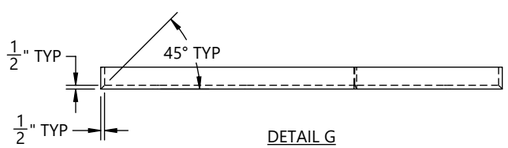

DETAIL G

BY		DATE
DRAWN:	KB	07/03/2026
CHK'D:	EV	07/03/2026

REV.	ECR #	DESCRIPTION	APPROVED BY	DATE
1		SUBMITTED FOR APPROVAL	EV	06/26/2026

REVISIONS

CHM INDUSTRIES
700 E. McLEROY BLVD
SAGINAW, TEXAS 76179
682.286.0046 PH
682.286.0086 FX
CHMINDUSTRIES.COM

(SEE CHM IND., INC. PROCEDURE CHM-PR-1.7.3-F1 FOR STANDARD TOLERANCES)

QTY: 1 | GLM: (FT-K) 5089.02 | JOB NO. 12899 | PART NO. 12899-00700-CAS | DWG NO. 12899-00700

CUST NAME: GREENVILLE UTILITIES STEEL STRUCTURES- NC
STR #: 49 TYPE/CLASS-HEIGHT: 95
DESCRIPTION: CAISSON, 53.00" X 53.00" X 36'-0"

SCALE: NTS DO NOT SCALE DRAWING
REV.: 1 SHEET: 4 of 6

THIS DWG IS PROPERTY OF CHM INDUSTRIES AND CONTAINS PROPRIETARY INFORMATION WHICH MAY NOT BE COPIED OR REPRODUCED WITHOUT PRIOR WRITTEN CONSENT FROM CHM INDUSTRIES.

SEE GENERAL NOTES AND DETAILS SHEET FOR SUPPLEMENTARY INFORMATION

INDIVIDUAL STRUCTURE BILL OF MATERIALS			
ITEM NO.	PART NUMBER	DESCRIPTION	QTY.
1	12899-00700-BOT	BOTTOM SECTION, 54.00" X 37.63" X 7/16" X 52'-6"	1
1.1	12899-00700-SHB	SHAFT, 12S, 54.00" X 37.63" X 7/16" X 52'-6"	1
1.2	12899-00700-BSP	BASE PLATE, Ø66 1/2" X 3 1/2"	1
1.3	B22011	4X4 ID TAG, A588	1
1.4	43010	NUT, HEAVY HEX, 1/2-13, HDG, A563 DH	1
1.5	43026	NUT, HEAVY HEX, 1-8, A563 DH3	4
1.6	12899-00700-VS209	VANG, OBROUND, 2-SIDED, 48 1/2" X 3" X 5/8"	1
1.7	12899-00700-VS210	VANG, OBROUND, 2-SIDED, 48 11/16" X 3" X 5/8"	1
1.8	12899-00700-VS211	VANG, OBROUND, 2-SIDED, 48 13/16" X 3" X 5/8"	1
1.9	12899-00700-VS212	VANG, OBROUND, 2-SIDED, 48 15/16" X 3" X 5/8"	1
2	12899-00700-TOP	TOP SECTION, 39.97" X 25.00" X 1/4" X 48'-0"	1
2.1	12899-00700-SHT	SHAFT, 12S, 39.97" X 25.00" X 1/4" X 48'-0"	1
2.2	12899-00700-TS	TOP STRAP, 24 3/8" X 2" X 3/16"	1
2.3	12899-00700-VS201	VANG, OBROUND, 2-SIDED, 34 1/8" X 3" X 5/8"	1
2.4	12899-00700-VS202	VANG, OBROUND, 2-SIDED, 34 5/16" X 3" X 5/8"	1
2.5	12899-00700-VS203	VANG, OBROUND, 2-SIDED, 36 5/8" X 3" X 3/4"	1
2.6	12899-00700-VS204	VANG, OBROUND, 2-SIDED, 36 7/8" X 3" X 3/4"	1
2.7	12899-00700-VS205	VANG, OBROUND, 2-SIDED, 39 1/16" X 3" X 3/4"	1
2.8	12899-00700-VS206	VANG, OBROUND, 2-SIDED, 39 3/8" X 3" X 3/4"	1
2.9	12899-00700-VS207	VANG, OBROUND, 2-SIDED, 41 1/2" X 3" X 3/4"	1
2.10	12899-00700-VS208	VANG, OBROUND, 2-SIDED, 41 13/16" X 3" X 3/4"	1
2.11	B22011	4X4 ID TAG, A588	1
2.12	43026	NUT, HEAVY HEX, 1-8, A563 DH3	4
2.13	43010	NUT, HEAVY HEX, 1/2-13, HDG, A563 DH	1
2.14	43029	NUT, HEX, 1/2-13, BLK, A563 DH	1
2.15	12899-00700-CP	COVER PLATE, Ø26 7/8" X 3/16"	1
2.16	42120	BOLT, 1/2-13 X 1-3/4", HDG, HH, A307 A	1
2.17	44018	WASHER, FLAT, 1/2", HDG, F436 T1	1

INDIVIDUAL STRUCTURE BILL OF MATERIALS			
ITEM NO.	PART NUMBER	DESCRIPTION	QTY.
2.18	12899-00700-THP01	VANG, RECTANGLE, 2-SIDED, 44 15/16" X 12" X 3/4"	2
2.19	12899-00700-THP102	VANG, RECTANGLE, 2-SIDED, 47 1/2" X 12" X 3/4"	2
3	12899-00002-ARM	SHAFT, ARM, 8S, 9.00" X 8.50" X 1/4" X 6'-6"	4
3.1	12899-00002-SHA	SHAFT, ARM, 8S, 9.00" X 8.50" X 1/4" X 5'-9 3/4"	1
3.2	12899-00002-AMB	ARM MOUNT BRACKET, 14 1/8" X 12" X 6 3/4" X 1"	1
3.3	12899-00002-EP	ARM END PLATE, Ø10 3/16" X 3/4"	1
3.4	12899-00002-VS202	VANG, OBROUND, 2-SIDED, 17 13/16" X 3" X 3/4"	1
3.5	12899-00002-BKT02	BRACKET, 5 1/2" X 4" X 3" X 1/2"	2
3.6	12899-00002-VS201	VANG, OBROUND, 2-SIDED, 17 9/16" X 3" X 3/4"	1
3.7	12899-00002-VS101	VANG, OBROUND, 1-SIDED, 3.0 X 2 1/2" X 3/4"	1
3.8	43010	NUT, HEAVY HEX, 1/2-13, HDG, A563 DH	2
3.9	12899-00002-GRT	EXP. METAL, 7 7/8" X 5" X .125"	1
4	43031	NUT, LOCK, ANCO, 1-8, HDG, A563 DH	32
5	44044	WASHER, FLAT, 1", HDG, F436 T1	64
6	42130	BOLT, HEAVY, 1-8 X 3-1/2", HDG, HH, A325 T1	32
7	12899-00700-CAS	CAISSON, 53.00" X 53.00" X 36'-0"	1
7.1	12899-00700-SNG	SINGLE SECTION, 53.00" X 53.00" X 1/2" X 36'-0"	1
7.1.1	12899-00700-SHS	SHAFT, 12S, 53.00" X 53.00" X 1/2" X 36'-0"	1
7.1.2	12899-00700-SHG	GND SLV HALF, 12S, 53.38" X 53.38" X 3/16" X 7'-6"	2
7.1.3	43010	NUT, HEAVY HEX, 1/2-13, HDG, A563 DH	6
7.1.4	12899-00700-BSP02	BASE PLATE, Ø73 1/2" X 3 1/2"	1
7.1.5	12899-00700-PLT01	DRIVING EAR, 1'-0" X 1'-0" X 1 1/2"	2
8	12899-00700-AB	ANCHOR BOLT, Ø2 1/4" X 4'-0", A-615	20
9	43035	NUT, HEAVY HEX, 2 1/4-4.5, HDG, A563 DH	80
10	44070	WASHER, FLAT, 2-1/4", HDG, F436 T1	20

REV.	ECR #	DESCRIPTION	APPROVED BY	DATE
1		SUBMITTED FOR APPROVAL	EV	07/03/2026

REVISIONS

BY		DATE
DRAWN:	KB	07/03/2026
CHK'D:	EV	07/03/2026

CHM INDUSTRIES
700 E. McLEROY BLVD
SAGINAW, TEXAS 76179
682.286.0046 PH
682.286.0086 FX
CHMINDUSTRIES.COM

(SEE CHM IND., INC. PROCEDURE CHM-PR-1.7.3-F1 FOR STANDARD TOLERANCES)

QTY: 1 | GLM: (FT-K) 5089.02 | JOB NO. 12899 | PART NO. 12899-00700-SBOM | DWG NO. 12899-00700

CUST NAME: GREENVILLE UTILITIES STEEL STRUCTURES- NC

STR #: 49 TYPE/CLASS-HEIGHT: 95

DESCRIPTION: STRUCTURE, 54.00" X 25.00" X 95'-0"

SCALE: NTS DO NOT SCALE DRAWING

REV. 1 | SHEET: 5 of 6

THIS DWG IS PROPERTY OF CHM INDUSTRIES AND CONTAINS PROPRIETARY INFORMATION WHICH MAY NOT BE COPIED OR REPRODUCED WITHOUT PRIOR WRITTEN CONSENT FROM CHM INDUSTRIES.

SEE GENERAL NOTES AND DETAILS SHEET FOR SUPPLEMENTARY INFORMATION

TOTAL JOB MATERIAL REQUIREMENTS				
ITEM NO.	PART NUMBER	DESCRIPTION	QTY.	JOB QTY.
1	12899-00700-SHB	SHAFT, 12S, 54.00" X 37.63" X 7/16" X 52'-6"	1	1
2	12899-00700-BSP	BASE PLATE, Ø66 1/2" X 3 1/2"	1	1
3	B22011	4X4 ID TAG, A588	2	2
4	43026	NUT, HEAVY HEX, 1-8, A563 DH3	8	8
5	12899-00700-VS209	VANG, OBROUND, 2-SIDED, 48 1/2" X 3" X 5/8"	1	1
6	12899-00700-VS210	VANG, OBROUND, 2-SIDED, 48 11/16" X 3" X 5/8"	1	1
7	12899-00700-VS211	VANG, OBROUND, 2-SIDED, 48 13/16" X 3" X 5/8"	1	1
8	12899-00700-VS212	VANG, OBROUND, 2-SIDED, 48 15/16" X 3" X 5/8"	1	1
9	12899-00700-SHT	SHAFT, 12S, 39.97" X 25.00" X 1/4" X 48'-0"	1	1
10	12899-00700-TS	TOP STRAP, 24 3/8" X 2" X 3/16"	1	1
11	12899-00700-VS201	VANG, OBROUND, 2-SIDED, 34 1/8" X 3" X 5/8"	1	1
12	12899-00700-VS202	VANG, OBROUND, 2-SIDED, 34 5/16" X 3" X 5/8"	1	1
13	12899-00700-VS203	VANG, OBROUND, 2-SIDED, 36 5/8" X 3" X 3/4"	1	1
14	12899-00700-VS204	VANG, OBROUND, 2-SIDED, 36 7/8" X 3" X 3/4"	1	1
15	12899-00700-VS205	VANG, OBROUND, 2-SIDED, 39 1/16" X 3" X 3/4"	1	1
16	12899-00700-VS206	VANG, OBROUND, 2-SIDED, 39 3/8" X 3" X 3/4"	1	1
17	12899-00700-VS207	VANG, OBROUND, 2-SIDED, 41 1/2" X 3" X 3/4"	1	1
18	12899-00700-VS208	VANG, OBROUND, 2-SIDED, 41 13/16" X 3" X 3/4"	1	1
19	12899-00700-CP	COVER PLATE, Ø26 7/8" X 3/16"	1	1
20	42120	BOLT, 1/2-13 X 1-3/4", HDG, HH, A307 A	1	1
21	44018	WASHER, FLAT, 1/2", HDG, F436 T1	1	1
22	12899-00700-THP01	VANG, RECTANGLE, 2-SIDED, 44 15/16" X 12" X 3/4"	2	2
23	12899-00700-THP102	VANG, RECTANGLE, 2-SIDED, 47 1/2" X 12" X 3/4"	2	2
24	12899-00002-SHA	SHAFT, ARM, 8S, 9.00" X 8.50" X 1/4" X 5'-9 3/4"	4	4

TOTAL JOB MATERIAL REQUIREMENTS				
ITEM NO.	PART NUMBER	DESCRIPTION	QTY.	JOB QTY.
25	12899-00002-AMB	ARM MOUNT BRACKET, 14 1/8" X 12" X 6 3/4" X 1"	4	4
26	12899-00002-EP	ARM END PLATE, Ø10 3/16" X 3/4"	4	4
27	12899-00002-VS202	VANG, OBROUND, 2-SIDED, 17 13/16" X 3" X 3/4"	4	4
28	12899-00002-BKT02	BRACKET, 5 1/2" X 4" X 3" X 1/2"	8	8
29	12899-00002-VS201	VANG, OBROUND, 2-SIDED, 17 9/16" X 3" X 3/4"	4	4
30	12899-00002-VS101	VANG, OBROUND, 1-SIDED, 3.0 X 2 1/2" X 3/4"	4	4
31	12899-00002-GRT	EXP. METAL, 7 7/8" X 5" X .125"	4	4
32	44044	WASHER, FLAT, 1", HDG, F436 T1	64	64
33	43031	NUT, LOCK, ANCO, 1-8, HDG, A563 DH	32	32
34	42130	BOLT, HEAVY, 1-8 X 3-1/2", HDG, HH, A325 T1	32	32
35	12899-00700-SHS	SHAFT, 12S, 53.00" X 53.00" X 1/2" X 36'-0"	1	1
36	12899-00700-SHG	GND SLV HALF, 12S, 53.38" X 53.38" X 3/16" X 7'-6"	2	2
37	12899-00700-BSP02	BASE PLATE, Ø73 1/2" X 3 1/2"	1	1
38	12899-00700-PLT01	DRIVING EAR, 1'-0" X 1'-0" X 1 1/2"	2	2
39	12899-00700-AB	ANCHOR BOLT, Ø2 1/4" X 4'-0", A-615	20	20
40	43035	NUT, HEAVY HEX, 2 1/4-4.5, HDG, A563 DH	80	80
41	44070	WASHER, FLAT, 2-1/4", HDG, F436 T1	20	20
42	43010	NUT, HEAVY HEX, 1/2-13, HDG, A563 DH	16	16
43	43029	NUT, HEX, 1/2-13, BLK, A563 DH	1	1

REV.	ECR #	DESCRIPTION	APPROVED BY	DATE
1		SUBMITTED FOR APPROVAL	EV	07/03/2026

REVISIONS

BY		DATE
DRAWN:	KB	07/03/2026
CHK'D:	EV	07/03/2026

CHM INDUSTRIES
700 E. McLEROY BLVD
SAGINAW, TEXAS 76179
682.286.0046 PH
682.286.0086 FX
CHMINDUSTRIES.COM

(SEE CHM IND., INC. PROCEDURE CHM-PR-1.7.3-F1 FOR STANDARD TOLERANCES)

QTY: 1 | GLM: (FT-K) 5089.02 | JOB NO. 12899 | PART NO. 12899-00700-PBOM | DWG NO. 12899-00700

CUST NAME: GREENVILLE UTILITIES STEEL STRUCTURES- NC

STR #: 49 TYPE/CLASS-HEIGHT: 95

DESCRIPTION: STRUCTURE, 54.00" X 25.00" X 95'-0"

SCALE: NTS DO NOT SCALE DRAWING

REV. 1 | SHEET: 6 of 6

THIS DWG IS PROPERTY OF CHM INDUSTRIES AND CONTAINS PROPRIETARY INFORMATION WHICH MAY NOT BE COPIED OR REPRODUCED WITHOUT PRIOR WRITTEN CONSENT FROM CHM INDUSTRIES.

FINISH:	BLACK WEIGHT	GALVANIZED WEIGHT
GALVANIZED	11771 LBS	12477 LBS
WEIGHTS ABOVE INCLUDE ALL BOM ITEMS		

SEE GENERAL NOTES AND DETAILS SHEET FOR SUPPLEMENTARY INFORMATION

ITEM #	PART #	DESCRIPTION	QTY.
1	12899-00800-BOT	BOTTOM SECTION, 35.08" X 33.16" X 5/16" X 8'-9"	1
2	12899-00800-MID	MIDDLE SECTION, 34.95" X 24.45" X 5/16" X 47'-9"	1
3	12899-00800-TOP	TOP SECTION, 25.90" X 16.00" X 1/4" X 45'-0"	1

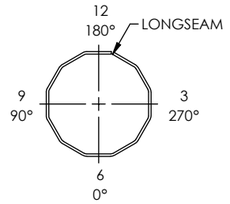

ORIENTATION DETAIL
TOP VIEW

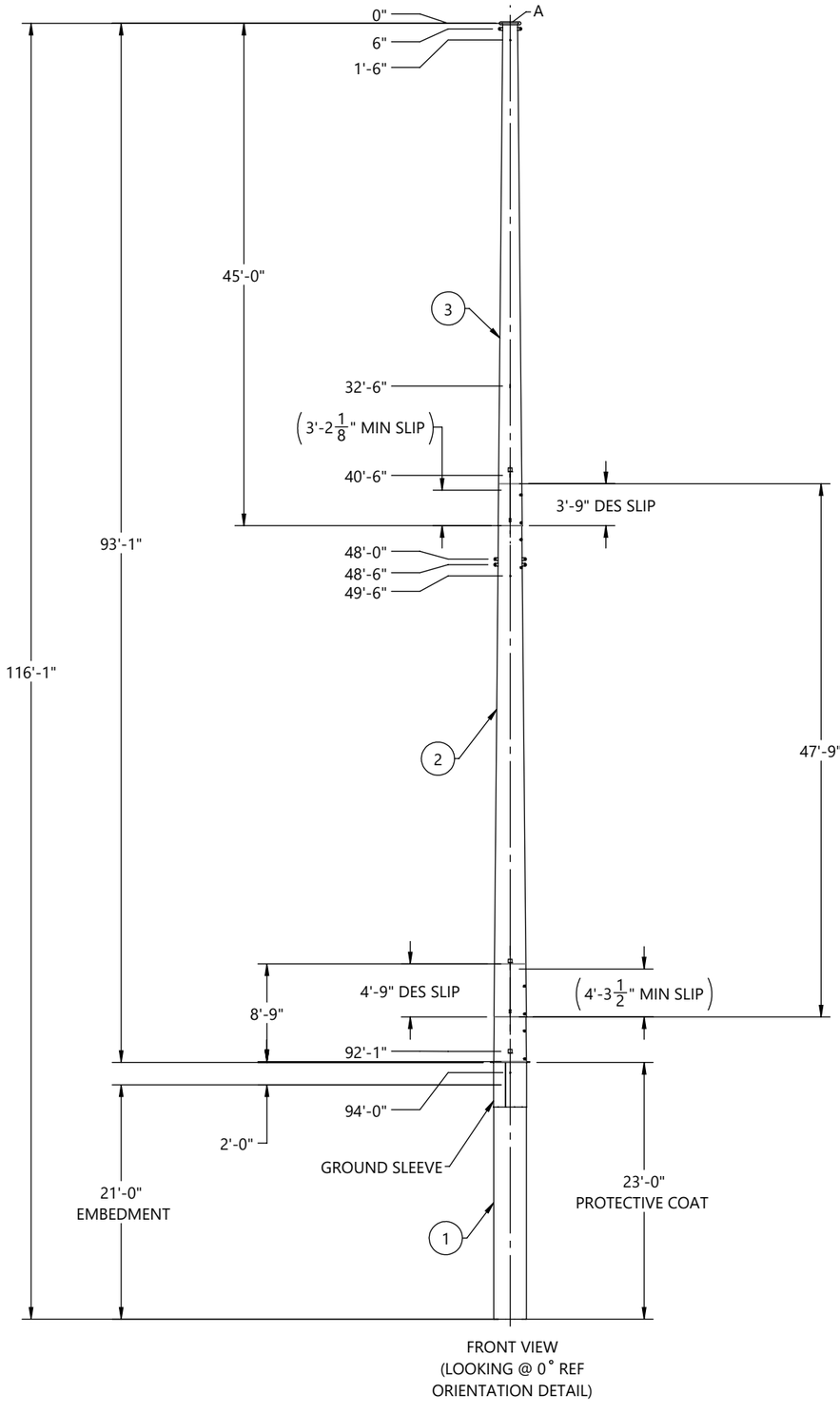

FRONT VIEW
(LOOKING @ 0˚ REF
ORIENTATION DETAIL)

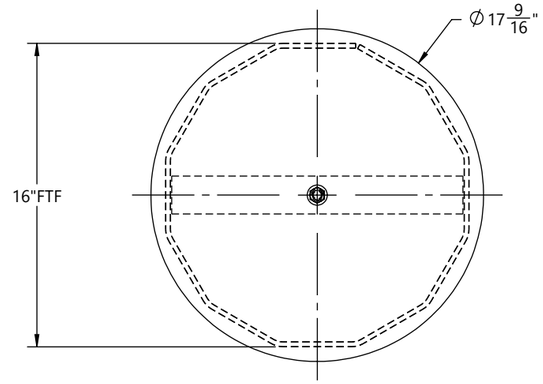

SECTION B-B

HOLE CHART		
HOLE SIZE (INCH)	DISTANCE FROM TOP OF SHAFT	FLAT(S)
13/16"	8'-0"	3, 9
13/16"	9'-0"	3, 9
13/16"	16'-0"	3, 9
13/16"	17'-0"	3, 9
13/16"	24'-0"	3, 9
13/16"	25'-0"	3, 9
11/16"	33'-0"	6,12
11/16"	34'-0"	6,12
11/16"	41'-0"	6,12
11/16"	42'-0"	6,12

CUSTOMER PLEASE VERIFY
HOLES AT 41'-0" & 42'-0"
ELEVATION ARE FALLING IN
BETWEEN SLIP JOINT .
PLEASE SUGGEST

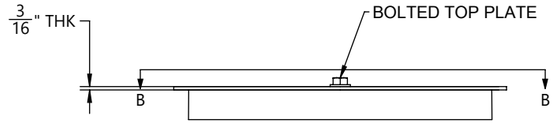

DETAIL A

BY		DATE
DRAWN:	KR	07/17/2026
CHK'D:	EV	07/17/2026

REV.	ECR #	DESCRIPTION	APPROVED BY	DATE
1		SUBMITTAL FOR APPROVAL	EV	07/17/2026

REVISIONS

CHM INDUSTRIES
700 E. McLEROY BLVD
SAGINAW, TEXAS 76179
682.286.0046 PH
682.286.0086 FX
CHMINDUSTRIES.COM

(SEE CHM IND., INC. PROCEDURE CHM-PR-1.7.3-F1 FOR STANDARD TOLERANCES)

QTY: 1 | GLM: (FT-K) 1554.29 | JOB NO. 12899 | PART NO. 12899-00800-MN | DWG NO. 12899-00800

CUST NAME: GREENVILLE UTILITIES STEEL STRUCTURES- NC
STR #: 50 TYPE/CLASS-HEIGHT: S17-95'-0"
DESCRIPTION: STRUCTURE, 35.08" X 16.00" X 93'-0"

SCALE: NTS
DO NOT SCALE DRAWING
REV. 1 | SHEET: 1 of 6

THIS DWG IS PROPERTY OF CHM INDUSTRIES AND CONTAINS PROPRIETARY INFORMATION WHICH MAY NOT BE COPIED OR REPRODUCED WITHOUT PRIOR WRITTEN CONSENT FROM CHM INDUSTRIES.

FINISH:	BLACK WEIGHT	GALVANIZED WEIGHT
GALVANIZED	4358 LBS	4619 LBS
WEIGHTS ABOVE INCLUDE ALL BOM ITEMS		

SEE GENERAL NOTES AND DETAILS SHEET FOR SUPPLEMENTARY INFORMATION

ITEM #	PART #	DESCRIPTION	MAT'L	QTY.
1	12899-00800-SHB	SHAFT, 12S, 35.08" X 33.16" X 5/16" X 8'-9"	A572 GR65	1
2	12899-00800-CAS-SHS	SHAFT, 12S, 35.08" X 35.08" X 5/16" X 23'-0"	A572 GR65	1
3	12899-00800-CAS-SHG	GND SLV HALF, 12S, 35.46" X 35.46" X 3/16" X 4'-0"	A572 GR65	2
4	12899-00800-PLT	SPLICE PLATE, Ø42 1/16" X 1"	A572 GR65	1
5	12899-00800-EAR	DRIVING EAR 1'-0" X 1'-3 3/8"X 1"	A572 GR65	2
6	43010	NUT, HEAVY HEX, 1/2-13, HDG, A563 DH	A563-DH	1
7	43026	NUT, HEAVY HEX, 1-8, A563 DH3	A563-DH3	4
8	B22011	4X4 ID TAG, A588	A588	1

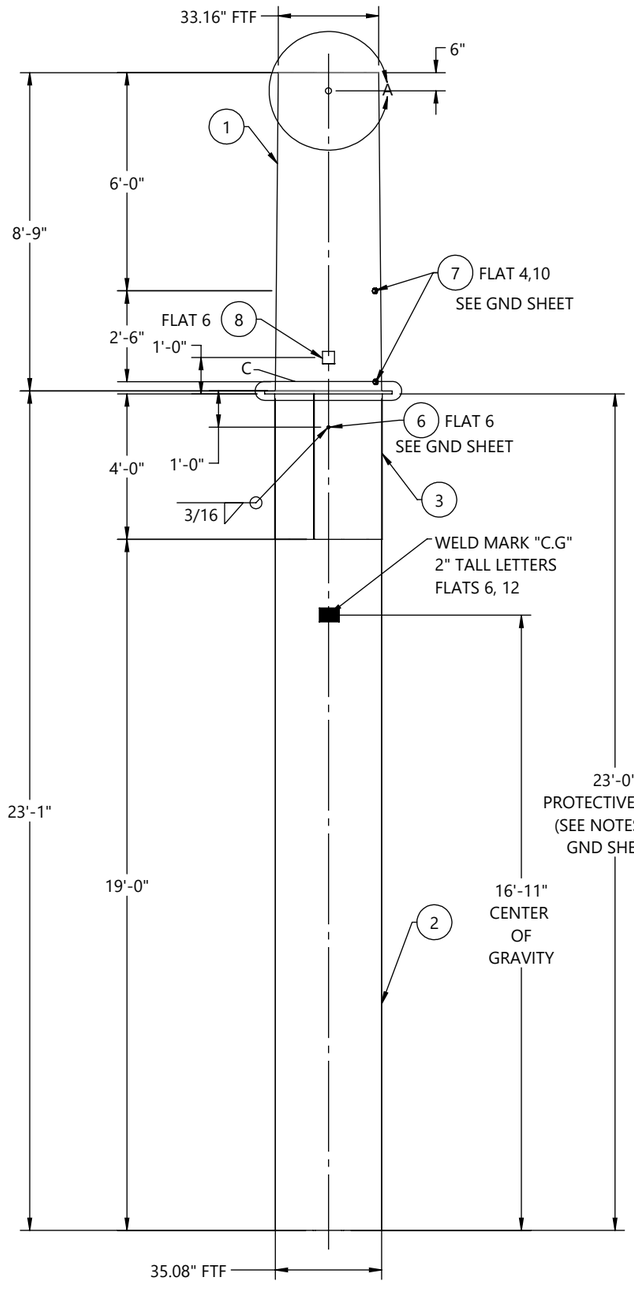

FRONT VIEW
(LOOKING @ 0˚ REF
ORIENTATION DETAIL)

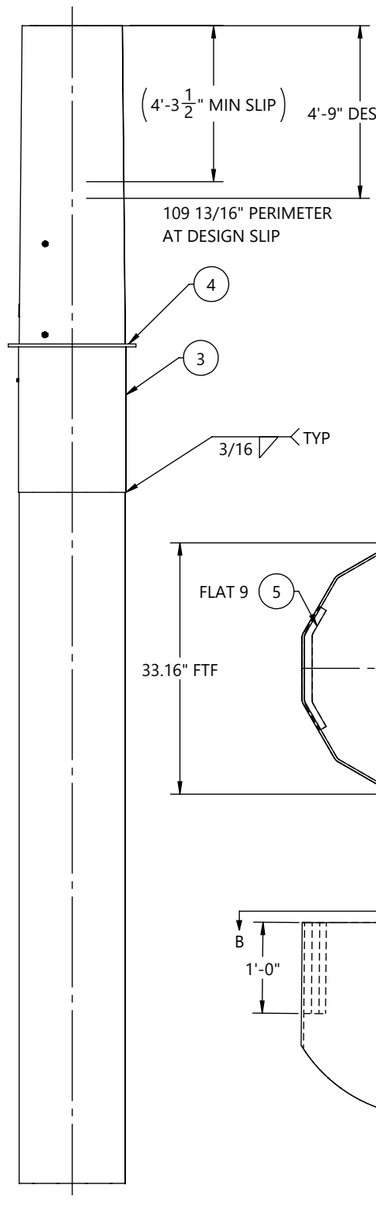

SIDE VIEW
(LOOKING @ 270˚ REF
ORIENTATION DETAIL)

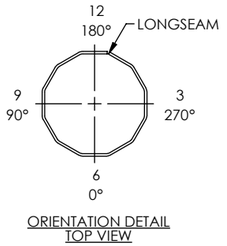

ORIENTATION DETAIL
TOP VIEW

GREENVILLE UTILITIES STEEL STRUCTURES- NC
STR#: 50, S17-95'-0"
GLM: 1554.29 FT-K
STR WT: 12477 LBS
SEC WT: 4619 LBS
DOM: [mm/YYYY]
CHM-12899-00800
12899-00800-BOT

ID TAG

TEXT TO BE 7/16" LETTERS
TAGS TO BE ORIENTED ON 0° FLAT
WEIGHT ON ID TAG IS FINISHED GALV. WEIGHT

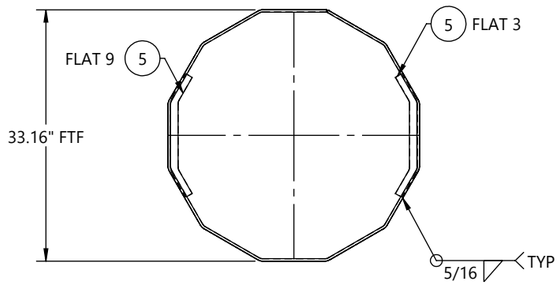

SECTION B-B

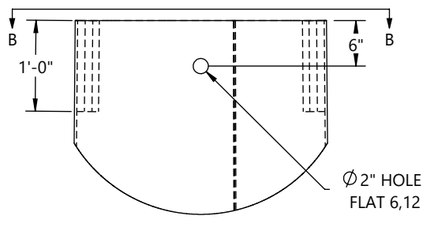

DETAIL A

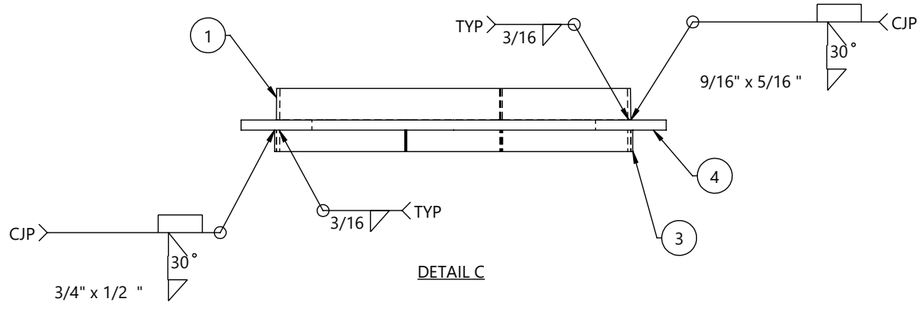

DETAIL C

REV.	ECR #	DESCRIPTION	APPROVED BY	DATE
1		SUBMITTAL FOR APPROVAL	EV	07/17/2026

REVISIONS

BY	DATE
DRAWN: KR	07/17/2026
CHK'D: EV	07/17/2026

CHM INDUSTRIES
700 E. McLEROY BLVD
SAGINAW, TEXAS 76179
682.286.0046 PH
682.286.0086 FX
CHMINDUSTRIES.COM

(SEE CHM IND., INC. PROCEDURE CHM-PR-1.7.3-F1 FOR STANDARD TOLERANCES)

QTY: 1 | GLM: (FT-K) 1554.29 | JOB NO. 12899 | PART NO. 12899-00800-BOT | DWG NO. 12899-00800

CUST NAME: GREENVILLE UTILITIES STEEL STRUCTURES- NC
STR #: 50 TYPE/CLASS-HEIGHT: S17-95'-0"
DESCRIPTION: BOTTOM SECTION, 35.08" X 33.16" X 5/16" X 8'-9"

SCALE: NTS DO NOT SCALE DRAWING | REV. 1 | SHEET: 2 of 6

THIS DWG IS PROPERTY OF CHM INDUSTRIES AND CONTAINS PROPRIETARY INFORMATION WHICH MAY NOT BE COPIED OR REPRODUCED WITHOUT PRIOR WRITTEN CONSENT FROM CHM INDUSTRIES.

FINISH:	BLACK WEIGHT	GALVANIZED WEIGHT
GALVANIZED	4816 LBS	5105 LBS
	WEIGHTS ABOVE INCLUDE ALL BOM ITEMS	

SEE GENERAL NOTES AND DETAILS SHEET FOR SUPPLEMENTARY INFORMATION

ITEM #	PART #	DESCRIPTION	MAT'L	QTY.
1	12899-00800-SHM	SHAFT, 12S, 34.95" X 24.45" X 5/16" X 47'-9"	A572 GR65	1
2	12899-00800-VS204	VANG, OBROUND, 2-SIDED, 34 15/16" X 3" X 5/8"	A572 GR65	1
3	12899-00800-VS205	VANG, OBROUND, 2-SIDED, 35 1/16" X 3" X 5/8"	A572 GR65	1
4	43026	NUT, HEAVY HEX, 1-8, A563 DH3	A563-DH3	8
5	43010	NUT, HEAVY HEX, 1/2-13, HDG, A563 DH	A563-DH	1
6	B22011	4X4 ID TAG, A588	A588	1

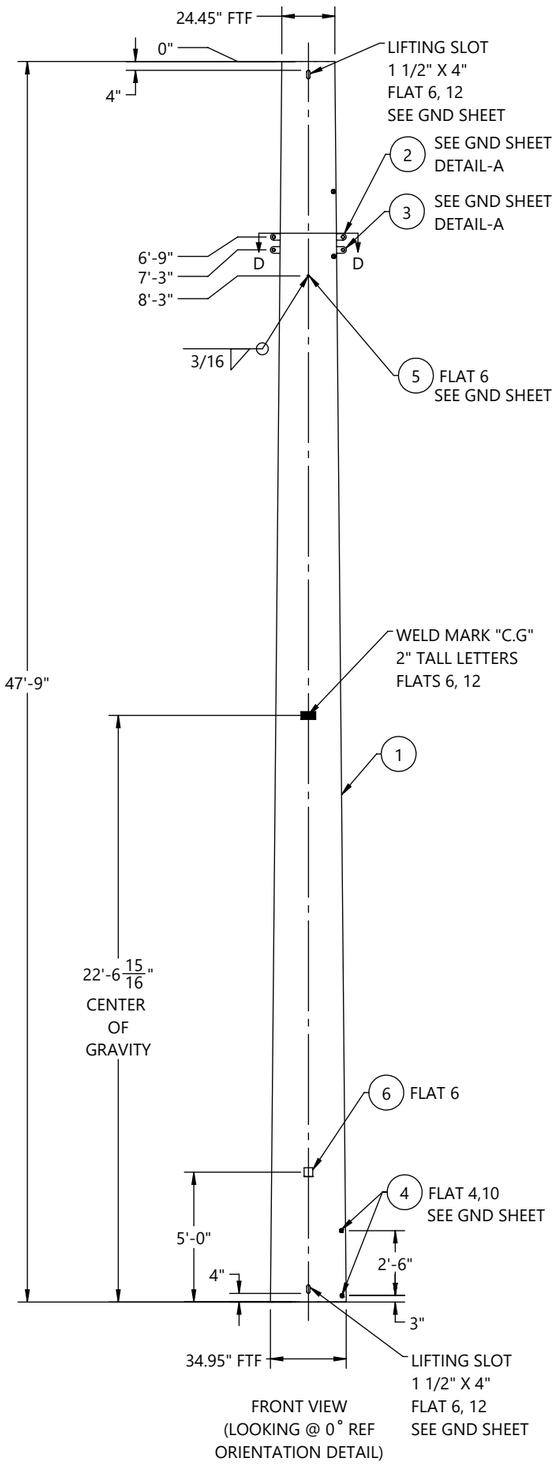

FRONT VIEW
(LOOKING @ 0° REF
ORIENTATION DETAIL)

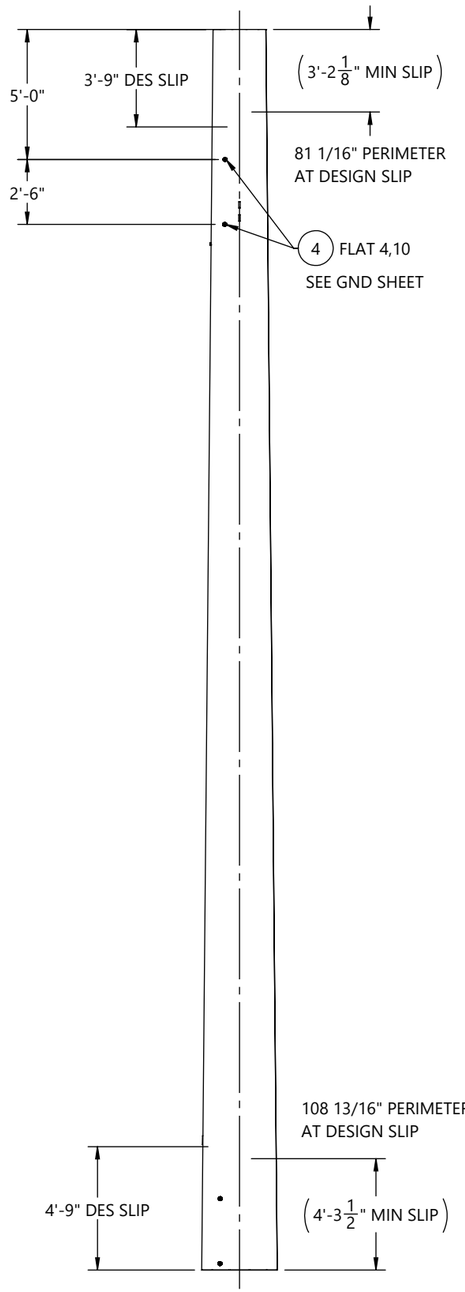

SIDE VIEW
(LOOKING @ 270° REF
ORIENTATION DETAIL)

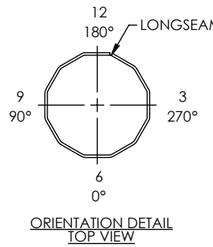

ORIENTATION DETAIL
TOP VIEW

GREENVILLE UTILITIES STEEL STRUCTURES- NC
STR#: 50, S17-95'-0"
SEC WT: 5105 LBS
DOM: [mm/YYYY]
CHM-12899-00800
12899-00800-MID

ID TAG

TEXT TO BE 7/16" LETTERS
TAGS TO BE ORIENTED ON 0° FLAT
WEIGHT ON ID TAG IS FINISHED GALV. WEIGHT

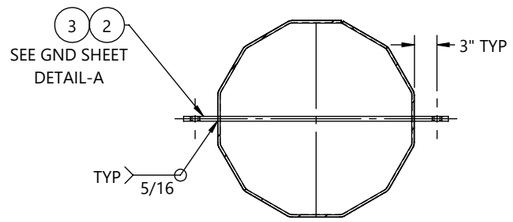

SECTION D-D
(TYP 2-PLACES)

BY		DATE
DRAWN:	KR	07/17/2026
CHK'D:	EV	07/17/2026

REV.	ECR #	DESCRIPTION	APPROVED BY	DATE
1		SUBMITTAL FOR APPROVAL	EV	07/17/2026

REVISIONS

CHM INDUSTRIES
700 E. McLEROY BLVD
SAGINAW, TEXAS 76179
682.286.0046 PH
682.286.0086 FX
CHMINDUSTRIES.COM

(SEE CHM IND., INC. PROCEDURE CHM-PR-1.7.3-F1 FOR STANDARD TOLERANCES)

QTY: 1 | GLM: (FT-K) 1554.29 | JOB NO. 12899 | PART NO. 12899-00800-MID | DWG NO. 12899-00800

CUST NAME: GREENVILLE UTILITIES STEEL STRUCTURES- NC
STR #: 50 TYPE/CLASS-HEIGHT: S17-95'-0"
DESCRIPTION: MIDDLE SECTION, 34.95" X 24.45" X 5/16" X 47'-9"

SCALE: NTS DO NOT SCALE DRAWING
REV: 1 | SHEET: 3 of 6

THIS DWG IS PROPERTY OF CHM INDUSTRIES AND CONTAINS PROPRIETARY INFORMATION WHICH MAY NOT BE COPIED OR REPRODUCED WITHOUT PRIOR WRITTEN CONSENT FROM CHM INDUSTRIES.

FINISH:	BLACK WEIGHT	GALVANIZED WEIGHT
GALVANIZED	2597 LBS	2753 LBS
WEIGHTS ABOVE INCLUDE ALL BOM ITEMS		

SEE GENERAL NOTES AND DETAILS SHEET FOR SUPPLEMENTARY INFORMATION

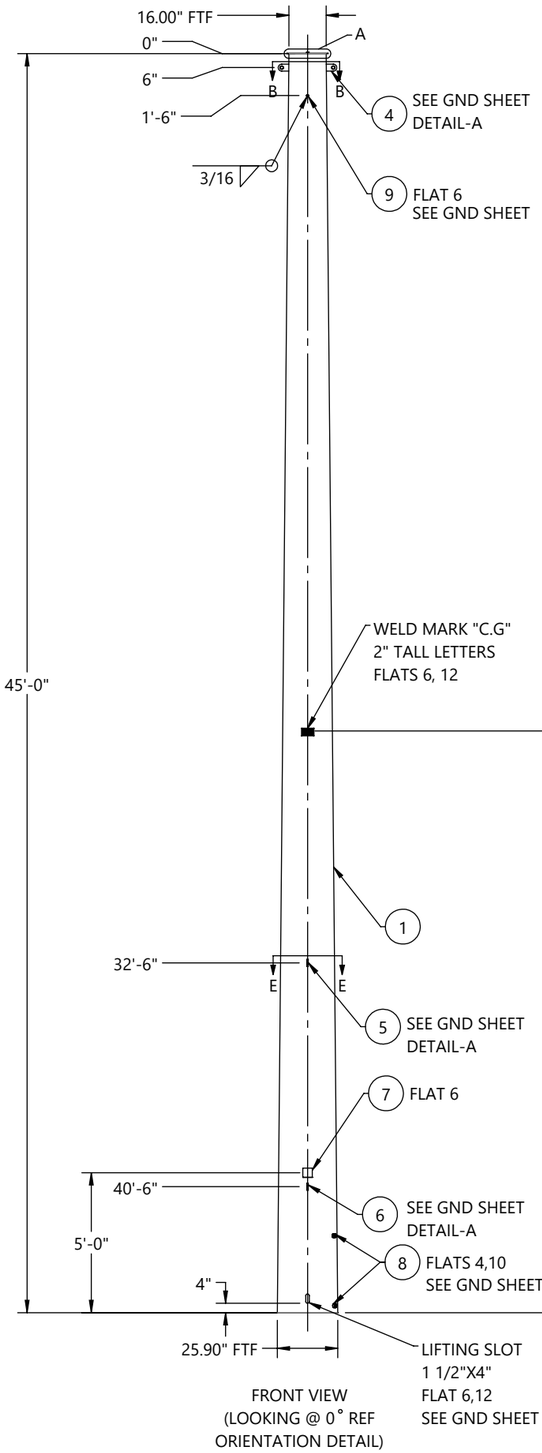

FRONT VIEW
(LOOKING @ 0° REF
ORIENTATION DETAIL)

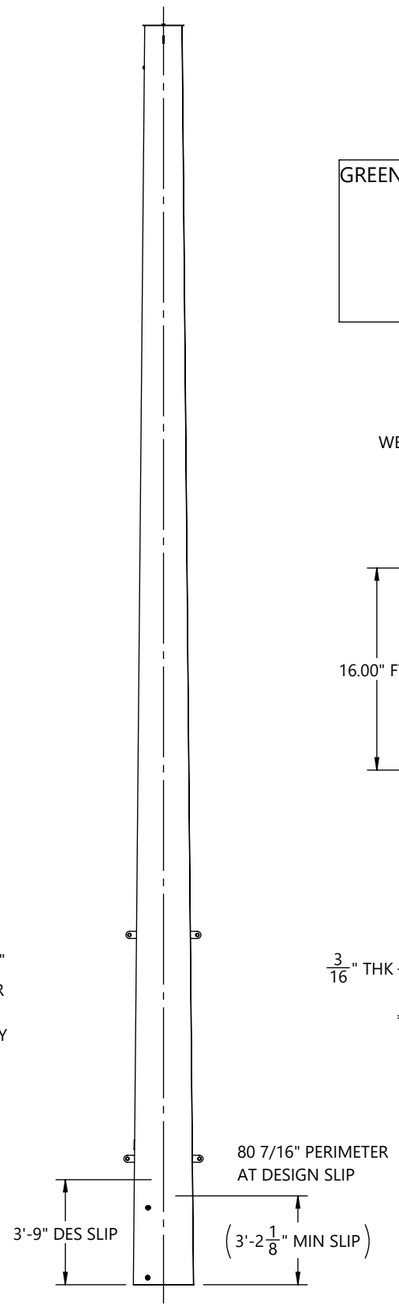

SIDE VIEW
(LOOKING @ 270° REF
ORIENTATION DETAIL)

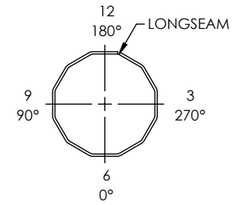

ORIENTATION DETAIL
TOP VIEW

GREENVILLE UTILITIES STEEL STRUCTURES- NC
STR#: 50, S17-95'-0"
SEC WT: 2753 LBS
DOM: [mm/YYYY]
CHM-12899-00800
12899-00800-TOP

ITEM #	PART #	DESCRIPTION	MAT'L	QTY.
1	12899-00800-SHT	SHAFT, 12S, 25.90" X 16.00" X 1/4" X 45'-0"	A572 GR65	1
2	12899-00800-TS	TOP STRAP, 15 3/8" X 2" X 3/16"	A572 GR65	1
3	12899-00800-CP	COVER PLATE, Ø17 9/16" X 3/16"	A572 GR65	1
4	12899-00800-VS201	VANG, OBROUND, 2-SIDED, 25 1/8" X 3" X 5/8"	A572 GR65	1
5	12899-00800-VS202	VANG, OBROUND, 2-SIDED, 32 1/8" X 3" X 5/8"	A572 GR65	1
6	12899-00800-VS203	VANG, OBROUND, 2-SIDED, 33 15/16" X 3" X 5/8"	A572 GR65	1
7	B22011	4X4 ID TAG, A588	A588	1
8	43026	NUT, HEAVY HEX, 1-8, A563 DH3	A563-DH3	4
9	43010	NUT, HEAVY HEX, 1/2-13, HDG, A563 DH	A563-DH	1
10	44018	WASHER, FLAT, 1/2", HDG, F436 T1	F436-T1	1
11	42120	BOLT, 1/2-13 X 1-3/4", HDG, HH, A307 A	A307-A	1
12	43029	NUT, HEX, 1/2-13, BLK, A563 DH	A563-DH	1

ID TAG

TEXT TO BE 7/16" LETTERS
TAGS TO BE ORIENTED ON 0° FLAT
WEIGHT ON ID TAG IS FINISHED GALV. WEIGHT

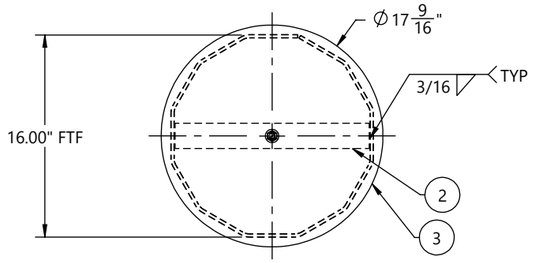

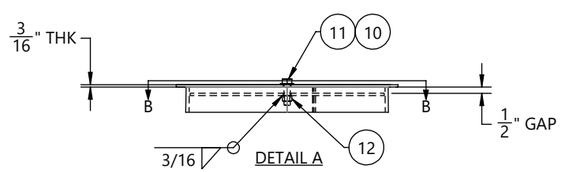

DETAIL A

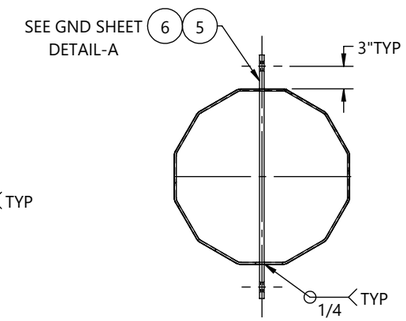

SECTION E-E
(TYP 2 PLACES)

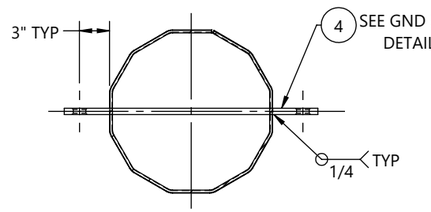

SECTION B-B

HOLE CHART		
HOLE SIZE (INCH)	DISTANCE FROM TOP OF SHAFT	FLAT(S)
13/16"	8'-0"	3, 9
13/16"	9'-0"	3, 9
13/16"	16'-0"	3, 9
13/16"	17'-0"	3, 9
13/16"	24'-0"	3, 9
13/16"	25'-0"	3, 9
11/16"	33'-0"	6,12
11/16"	34'-0"	6,12
11/16"	41'-0"	6,12
11/16"	42'-0"	6,12

CUSTOMER PLEASE VERIFY
HOLES AT 41'-0" & 42'-0"
ELEVATION ARE FALLING IN
BETWEEN SLIP JOINT .
PLEASE SUGGEST

BY	DATE
DRAWN: KR	07/17/2026
CHK'D: EV	07/17/2026

REV.	ECR #	DESCRIPTION	APPROVED BY	DATE
1		SUBMITTAL FOR APPROVAL	EV	07/17/2026

REVISIONS

CHM INDUSTRIES
700 E. McLEROY BLVD
SAGINAW, TEXAS 76179
682.286.0046 PH
682.286.0086 FX
CHMINDUSTRIES.COM

(SEE CHM IND., INC. PROCEDURE CHM-PR-1.7.3-F1 FOR STANDARD TOLERANCES)

QTY: 1	GLM: (FT-K) 1554.29	JOB NO. 12899	PART NO. 12899-00800-TOP	DWG NO. 12899-00800

CUST NAME: GREENVILLE UTILITIES STEEL STRUCTURES- NC
STR #: 50 TYPE/CLASS-HEIGHT: S17-95'-0"
DESCRIPTION: TOP SECTION, 25.90" X 16.00" X 1/4" X 45'-0"

SCALE: NTS DO NOT SCALE DRAWING
REV: 1 SHEET: 4 of 6

THIS DWG IS PROPERTY OF CHM INDUSTRIES AND CONTAINS PROPRIETARY INFORMATION WHICH MAY NOT BE COPIED OR REPRODUCED WITHOUT PRIOR WRITTEN CONSENT FROM CHM INDUSTRIES.

SEE GENERAL NOTES AND DETAILS SHEET FOR SUPPLEMENTARY INFORMATION

INDIVIDUAL STRUCTURE BILL OF MATERIALS			
ITEM NO.	PART NUMBER	DESCRIPTION	QTY.
1	12899-00800-BOT	BOTTOM SECTION, 35.08" X 33.16" X 5/16" X 8'-9"	1
1.1	12899-00800-SHB	SHAFT, 12S, 35.08" X 33.16" X 5/16" X 8'-9"	1
1.2	B22011	4X4 ID TAG, A588	1
1.3	43026	NUT, HEAVY HEX, 1-8, A563 DH3	4
1.4	12899-00800-CAS-MN	STRUCTURE, 35.08" X 35.08" X 23'-0"	1
1.4.1	12899-00800-CAS-SNG	SINGLE SECTION, 35.08" X 35.08" X 5/16" X 23'-0"	1
1.4.1.1	12899-00800-CAS-SHS	SHAFT, 12S, 35.08" X 35.08" X 5/16" X 23'-0"	1
1.4.1.2	12899-00800-CAS-SHG	GND SLV HALF, 12S, 35.46" X 35.46" X 3/16" X 4'-0"	2
1.4.1.3	12899-00800-PLT	SPLICE PLATE, Ø42 1/16" X 1"	1
1.4.2	43010	NUT, HEAVY HEX, 1/2-13, HDG, A563 DH	1
1.5	12899-00800-EAR	DRIVING EAR 1'-0" X 1'-3 3/8"X 1"	2
2	12899-00800-MID	MIDDLE SECTION, 34.95" X 24.45" X 5/16" X 47'-9"	1
2.1	12899-00800-SHM	SHAFT, 12S, 34.95" X 24.45" X 5/16" X 47'-9"	1
2.2	B22011	4X4 ID TAG, A588	1
2.3	43026	NUT, HEAVY HEX, 1-8, A563 DH3	8
2.4	43010	NUT, HEAVY HEX, 1/2-13, HDG, A563 DH	1
2.5	12899-00800-VS204	VANG, OBROUND, 2-SIDED, 34 15/16" X 3" X 5/8"	1
2.6	12899-00800-VS205	VANG, OBROUND, 2-SIDED, 35 1/16" X 3" X 5/8"	1
3	12899-00800-TOP	TOP SECTION, 25.90" X 16.00" X 1/4" X 45'-0"	1
3.1	12899-00800-SHT	SHAFT, 12S, 25.90" X 16.00" X 1/4" X 45'-0"	1
3.2	12899-00800-TS	TOP STRAP, 15 3/8" X 2" X 3/16"	1
3.3	12899-00800-VS201	VANG, OBROUND, 2-SIDED, 25 1/8" X 3" X 5/8"	1
3.4	B22011	4X4 ID TAG, A588	1
3.5	43026	NUT, HEAVY HEX, 1-8, A563 DH3	4
3.6	43010	NUT, HEAVY HEX, 1/2-13, HDG, A563 DH	1
3.7	12899-00800-CP	COVER PLATE, Ø17 9/16" X 3/16"	1
3.8	44018	WASHER, FLAT, 1/2", HDG, F436 T1	1
3.9	42120	BOLT, 1/2-13 X 1-3/4", HDG, HH, A307 A	1
3.10	12899-00800-VS202	VANG, OBROUND, 2-SIDED, 32 1/8" X 3" X 5/8"	1
3.11	43029	NUT, HEX, 1/2-13, BLK, A563 DH	1
3.12	12899-00800-VS203	VANG, OBROUND, 2-SIDED, 33 15/16" X 3" X 5/8"	1

BY		DATE
DRAWN:	KR	07/17/2026
CHK'D:	EV	07/17/2026

CHM INDUSTRIES
700 E. McLEROY BLVD
SAGINAW, TEXAS 76179
682.286.0046 PH
682.286.0086 FX
CHMINDUSTRIES.COM

(SEE CHM IND., INC. PROCEDURE CHM-PR-1.7.3-F1 FOR STANDARD TOLERANCES)

QTY: 1 | GLM: (FT-K) 1554.29 | JOB NO. 12899 | PART NO. 12899-00800-SBOM | DWG NO. 12899-00800

CUST NAME: GREENVILLE UTILITIES STEEL STRUCTURES- NC
STR #: 50 TYPE/CLASS-HEIGHT: S17-95'-0"
DESCRIPTION: STRUCTURE, 35.08" X 16.00" X 93'-0"

SCALE: NTS DO NOT SCALE DRAWING | REV. 1 | SHEET: 5 of 6

THIS DWG IS PROPERTY OF CHM INDUSTRIES AND CONTAINS PROPRIETARY INFORMATION WHICH MAY NOT BE COPIED OR REPRODUCED WITHOUT PRIOR WRITTEN CONSENT FROM CHM INDUSTRIES.

SEE GENERAL NOTES AND DETAILS SHEET FOR SUPPLEMENTARY INFORMATION

TOTAL JOB MATERIAL REQUIREMENTS				
ITEM NO.	PART NUMBER	DESCRIPTION	QTY.	JOB QTY.
1	42120	BOLT, 1/2-13 X 1-3/4", HDG, HH, A307 A	1	1
2	43026	NUT, HEAVY HEX, 1-8, A563 DH3	16	16
3	44018	WASHER, FLAT, 1/2", HDG, F436 T1	1	1
4	B22011	4X4 ID TAG, A588	3	3
5	12899-00800-VS201	VANG, OBROUND, 2-SIDED, 25 1/8" X 3" X 5/8"	1	1
6	12899-00800-CP	COVER PLATE, Ø17 9/16" X 3/16"	1	1
7	12899-00800-SHB	SHAFT, 12S, 35.08" X 33.16" X 5/16" X 8'-9"	1	1
8	12899-00800-SHM	SHAFT, 12S, 34.95" X 24.45" X 5/16" X 47'-9"	1	1
9	12899-00800-SHT	SHAFT, 12S, 25.90" X 16.00" X 1/4" X 45'-0"	1	1
10	12899-00800-TS	TOP STRAP, 15 3/8" X 2" X 3/16"	1	1
11	12899-00800-VS202	VANG, OBROUND, 2-SIDED, 32 1/8" X 3" X 5/8"	1	1
12	43010	NUT, HEAVY HEX, 1/2-13, HDG, A563 DH	3	3
13	43029	NUT, HEX, 1/2-13, BLK, A563 DH	1	1
14	12899-00800-VS204	VANG, OBROUND, 2-SIDED, 34 15/16" X 3" X 5/8"	1	1
15	12899-00800-VS205	VANG, OBROUND, 2-SIDED, 35 1/16" X 3" X 5/8"	1	1
16	12899-00800-VS203	VANG, OBROUND, 2-SIDED, 33 15/16" X 3" X 5/8"	1	1
17	12899-00800-CAS-SHS	SHAFT, 12S, 35.08" X 35.08" X 5/16" X 23'-0"	1	1
18	12899-00800-CAS-SHG	GND SLV HALF, 12S, 35.46" X 35.46" X 3/16" X 4'-0"	2	2
19	12899-00800-PLT	SPLICE PLATE, Ø42 1/16" X 1"	1	1
20	12899-00800-EAR	DRIVING EAR 1'-0" X 1'-3 3/8"X 1"	2	2

BY		DATE
DRAWN:	KR	07/17/2026
CHK'D:	EV	07/17/2026

CHM INDUSTRIES
700 E. McLEROY BLVD
SAGINAW, TEXAS 76179
682.286.0046 PH
682.286.0086 FX
CHMINDUSTRIES.COM

(SEE CHM IND., INC. PROCEDURE CHM-PR-1.7.3-F1 FOR STANDARD TOLERANCES)

QTY: 1 | GLM: (FT-K) 1554.29 | JOB NO. 12899 | PART NO. 12899-00800-PBOM | DWG NO. 12899-00800

CUST NAME: GREENVILLE UTILITIES STEEL STRUCTURES- NC
STR #: 50 TYPE/CLASS-HEIGHT: S17-95'-0"
DESCRIPTION: STRUCTURE, 35.08" X 16.00" X 93'-0"

SCALE: NTS DO NOT SCALE DRAWING | REV: 1 | SHEET: 6 of 6

THIS DWG IS PROPERTY OF CHM INDUSTRIES AND CONTAINS PROPRIETARY INFORMATION WHICH MAY NOT BE COPIED OR REPRODUCED WITHOUT PRIOR WRITTEN CONSENT FROM CHM INDUSTRIES.

FINISH:	BLACK WEIGHT	GALVANIZED WEIGHT
GALVANIZED	8223 LBS	8716 LBS
WEIGHTS ABOVE INCLUDE ALL BOM ITEMS		

SEE GENERAL NOTES AND DETAILS SHEET FOR SUPPLEMENTARY INFORMATION

ITEM #	PART #	DESCRIPTION	QTY.
1	12899-00900-BOT	BOTTOM SECTION, 28.18" X 26.33" X 5/16" X 8'-6"	1
2	12899-00900-MID	MIDDLE SECTION, 27.94 X 17.75 X 1/4" X 46'-9"	1
3	12899-00900-TOP	TOP SECTION, 18.97" X 10.25" X 1/4" X 40'-0"	1

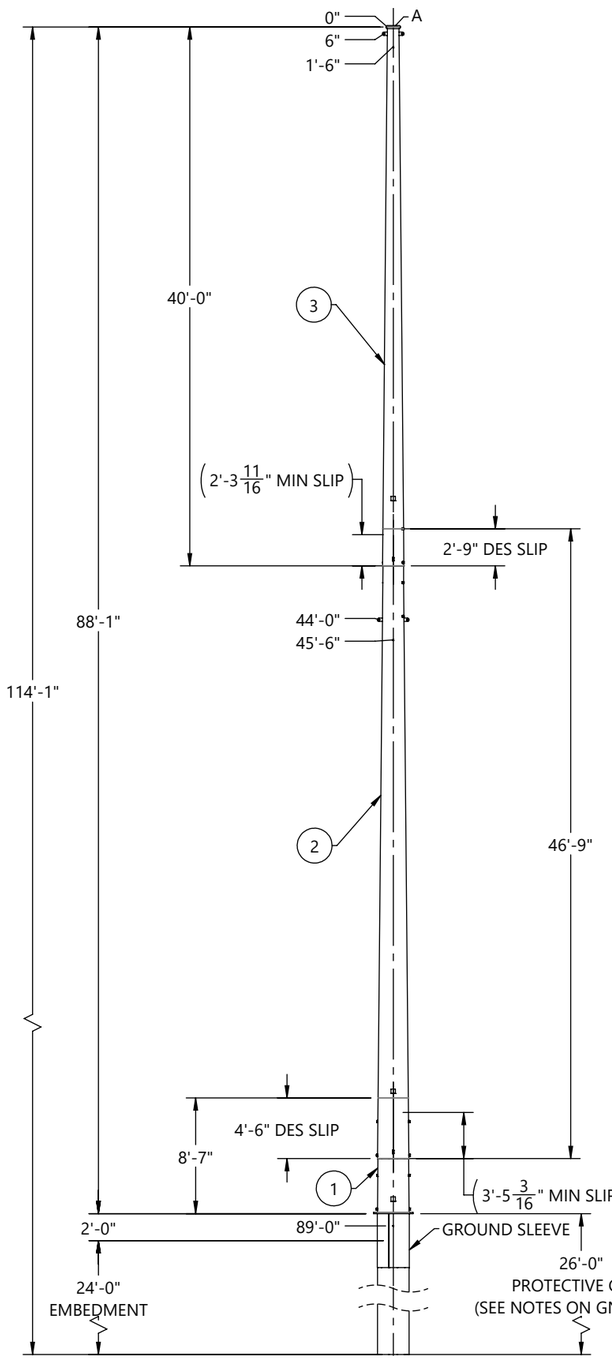

FRONT VIEW
(LOOKING @ 0° REF
ORIENTATION DETAIL)

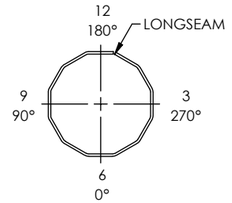

ORIENTATION DETAIL
TOP VIEW

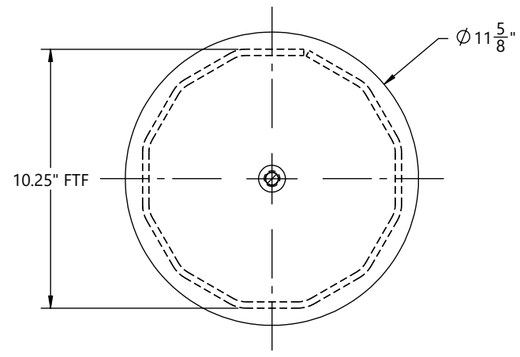

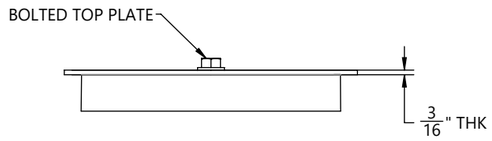

DETAIL A

HOLE CHART		
HOLE SIZE (INCH)	DISTANCE FROM TOP OF SHAFT	FLAT(S)
13/16"	8' - 0"	3, 9
13/16"	9' - 0"	3, 9
13/16"	14' - 0"	3, 9
13/16"	15' - 0"	3, 9
13/16"	20' - 0"	3, 9
13/16"	21' - 0"	3, 9
11/16"	29' - 0"	6, 12
11/16"	30' - 0"	6, 12
11/16"	33' - 0"	6, 12
11/16"	34' - 0"	6, 12
11/16"	37' - 0"	6, 12
11/16"	38' - 0"	6, 12

CUSTOMER PLEASE VERIFY
HOLE AT 37'-0" & 38'-0"
ELEVATIONS ARE FALLING
IN BETWEEN SLIP JOINT.
PLEASE SUGGEST.

BY	DATE
DRAWN: MP	07/01/2026
CHK'D: EV	07/01/2026

REV.	ECR #	DESCRIPTION	APPROVED BY	DATE
1		SUBMITTAL FOR APPROVAL	EV	07/17/2026

REVISIONS

CHM INDUSTRIES
700 E. McLEROY BLVD
SAGINAW, TEXAS 76179
682.286.0046 PH
682.286.0086 FX
CHMINDUSTRIES.COM

(SEE CHM IND., INC. PROCEDURE CHM-PR-1.7.3-F1 FOR STANDARD TOLERANCES)

QTY: 1 | GLM: (FT-K) 778.83 | JOB NO. 12899 | PART NO. 12899-00900-MN | DWG NO. 12899-00900

CUST NAME: GREENVILLE UTILITIES STEEL STRUCTURES-NC

STR #: 51 TYPE/CLASS-HEIGHT: S-09.0 - 90'-0"

DESCRIPTION: STRUCTURE, 28.18" X 10.25" X 88'-0"

SCALE: NTS DO NOT SCALE DRAWING

REV. 1 | SHEET: 1 of 6

THIS DWG IS PROPERTY OF CHM INDUSTRIES AND CONTAINS PROPRIETARY INFORMATION WHICH MAY NOT BE COPIED OR REPRODUCED WITHOUT PRIOR WRITTEN CONSENT FROM CHM INDUSTRIES.

FINISH:	BLACK WEIGHT	GALVANIZED WEIGHT
GALVANIZED	3754 LBS	3979 LBS
WEIGHTS ABOVE INCLUDE ALL BOM ITEMS		

SEE GENERAL NOTES AND DETAILS SHEET FOR SUPPLEMENTARY INFORMATION

ITEM #	PART #	DESCRIPTION	MAT'L	QTY.
1	12899-00900-SHB	SHAFT, 12S, 28.18" X 26.33" X 5/16" X 8'-6"	A572 GR65	1
2	12899-00900-CAS-SHS	SHAFT, 12S, 28.18" X 28.18" X 5/16" X 26'-0"	A572 GR65	1
3	12899-00900-CAS-SHG	GND SLV HALF, 12S, 28.56" X 28.56" X 3/16" X 4'-0"	A572 GR65	2
4	12899-00900-PLT	SPLICE PLATE, Ø35 3/16" X 1"	A572 GR65	1
5	12899-00900-EAR	DRIVING EAR, 1'-0" X 1'-2 3/8" X1"	A572 GR65	2
6	43009	NUT, HEX, 1/2-13, HDG, A563 DH	A563-DH	1
7	43026	NUT, HEAVY HEX, 1-8, A563 DH3	A563-DH3	4
8	B22011	4X4 ID TAG, A588	A588	1

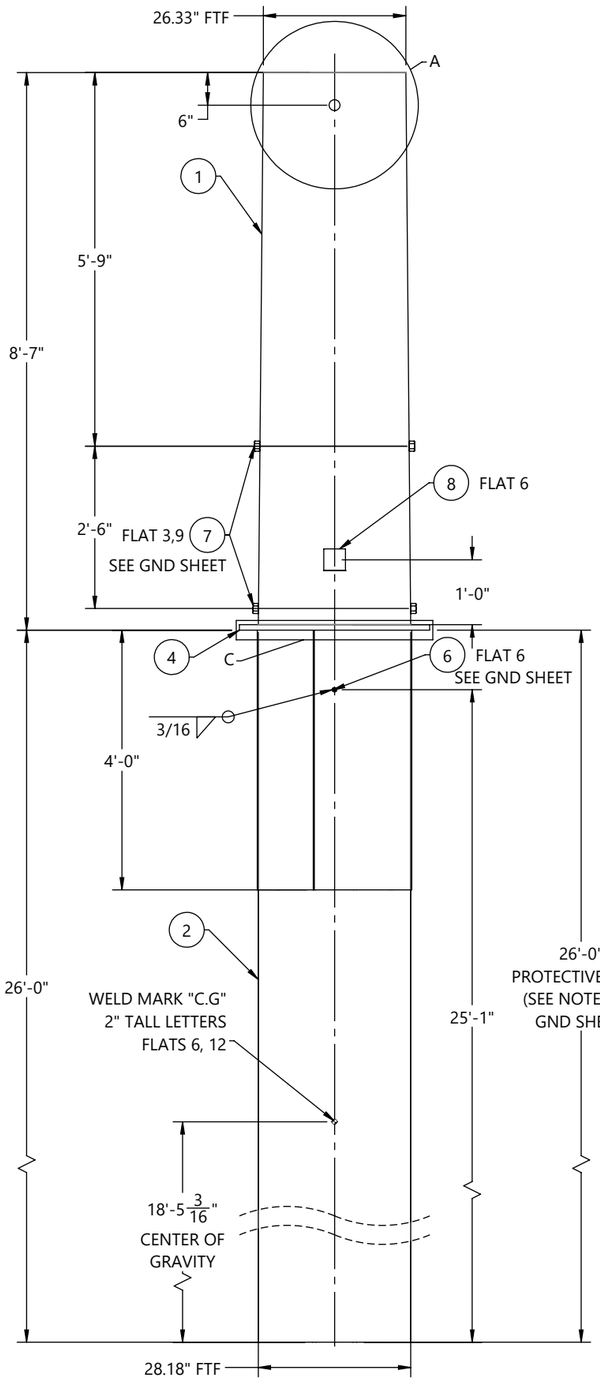

FRONT VIEW
(LOOKING @ 0° REF
ORIENTATION DETAIL)

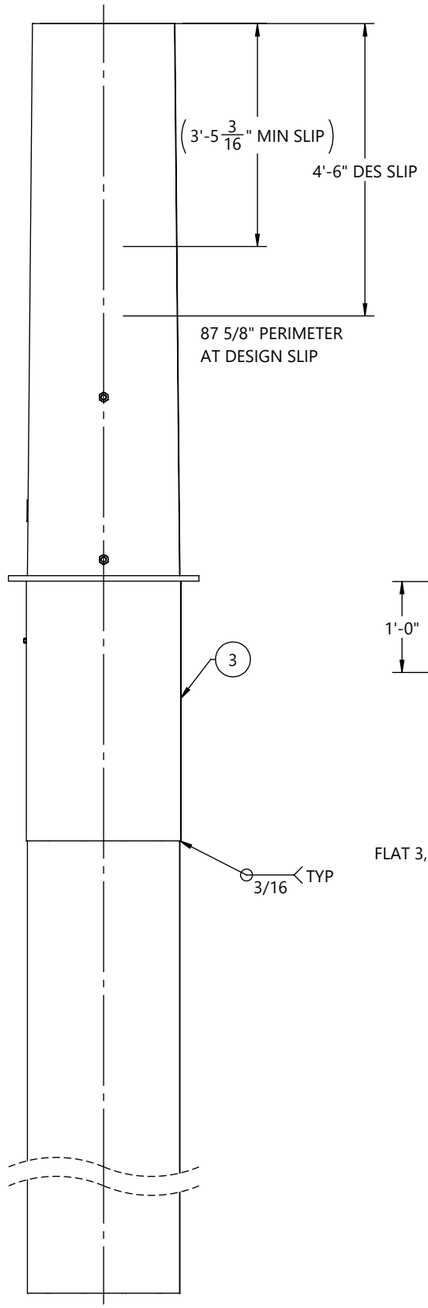

SIDE VIEW
(LOOKING @ 270° REF
ORIENTATION DETAIL)

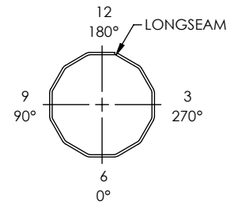

ORIENTATION DETAIL
TOP VIEW

GREENVILLE UTILITIES STEEL STRUCTURES-NC
STR#: 51, S-09.0 - 90'-0"
GLM: 778.83 FT-K
STR WT: 8716 LBS
SEC WT: 3979 LBS
DOM: [mm/YYYY]
CHM-12899-00900
12899-00900-BOT

ID TAG

TEXT TO BE 7/16" LETTERS
TAGS TO BE ORIENTED ON 0° FLAT
WEIGHT ON ID TAG IS FINISHED GALV. WEIGHT

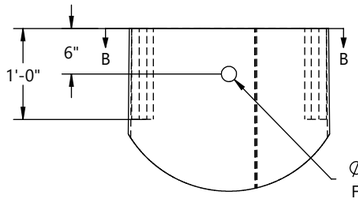

DETAIL A

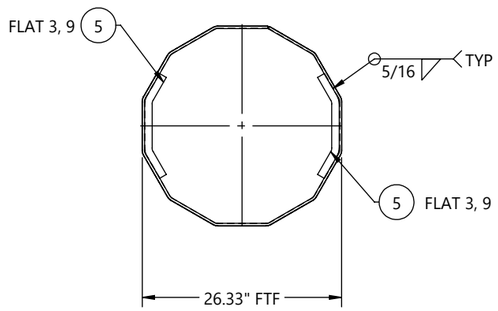

SECTION B-B

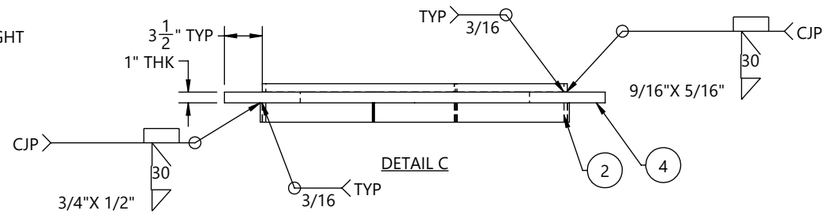

DETAIL C

REV.	ECR #	DESCRIPTION	APPROVED BY	DATE
1		SUBMITTAL FOR APPROVAL	EV	07/17/2026

REVISIONS

BY	DATE
DRAWN: MP	07/01/2026
CHK'D: EV	07/01/2026

CHM INDUSTRIES
700 E. McLEROY BLVD
SAGINAW, TEXAS 76179
682.286.0046 PH
682.286.0086 FX
CHMINDUSTRIES.COM

(SEE CHM IND., INC. PROCEDURE CHM-PR-1.7.3-F1 FOR STANDARD TOLERANCES)

QTY: 1 | GLM: (FT-K) 778.83 | JOB NO. 12899 | PART NO. 12899-00900-BOT | DWG NO. 12899-00900

CUST NAME: GREENVILLE UTILITIES STEEL STRUCTURES-NC
STR #: 51 TYPE/CLASS-HEIGHT: S-09.0 - 90'-0"
DESCRIPTION: BOTTOM SECTION, 28.18" X 26.33" X 5/16" X 8'-6"

SCALE: NTS DO NOT SCALE DRAWING
REV: 1 SHEET: 2 of 6

THIS DWG IS PROPERTY OF CHM INDUSTRIES AND CONTAINS PROPRIETARY INFORMATION WHICH MAY NOT BE COPIED OR REPRODUCED WITHOUT PRIOR WRITTEN CONSENT FROM CHM INDUSTRIES.

FINISH:	BLACK WEIGHT	GALVANIZED WEIGHT
GALVANIZED	2891 LBS	3064 LBS
WEIGHTS ABOVE INCLUDE ALL BOM ITEMS		

SEE GENERAL NOTES AND DETAILS SHEET FOR SUPPLEMENTARY INFORMATION

ITEM #	PART #	DESCRIPTION	MAT'L	QTY.
1	12899-00900-SHM	SHAFT, 12S, 27.94" X 17.75" X 1/4" X 46'-9"	A572 GR65	1
2	12899-00900-VS202	VANG, OBROUND, 2-SIDED, 28 5/16" X 3" X 5/8"	A572 GR65	1
3	43026	NUT, HEAVY HEX, 1-8, A563 DH3	A563-DH3	8
4	43010	NUT, HEAVY HEX, 1/2-13, HDG, A563 DH	A563-DH	1
5	B22011	4X4 ID TAG, A588	A588	1

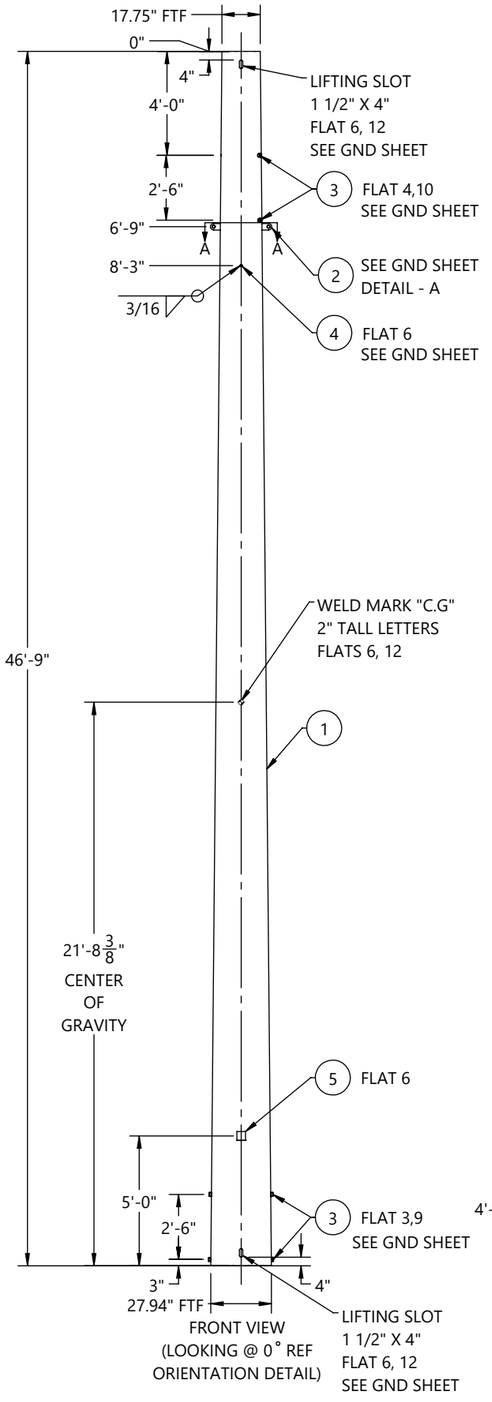

FRONT VIEW
(LOOKING @ 0° REF
ORIENTATION DETAIL)

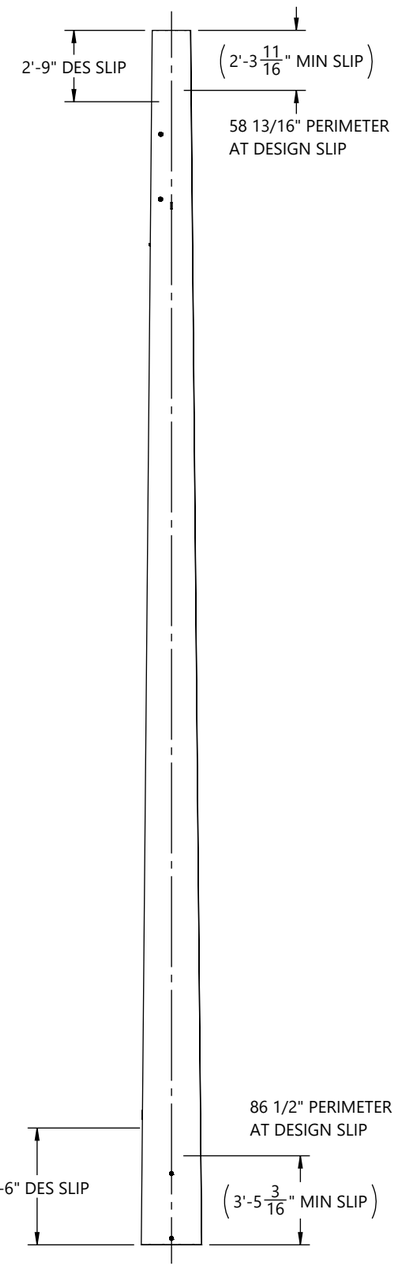

SIDE VIEW
(LOOKING @ 270° REF
ORIENTATION DETAIL)

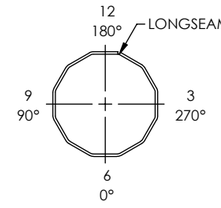

ORIENTATION DETAIL
TOP VIEW

GREENVILLE UTILITIES STEEL STRUCTURES-NC
STR#: 51, S-09.0 - 90'-0"
SEC WT: 3064 LBS
DOM: [mm/YYYY]
CHM-12899-00900
12899-00900-MID

ID TAG

TEXT TO BE 7/16" LETTERS
TAGS TO BE ORIENTED ON 0° FLAT
WEIGHT ON ID TAG IS FINISHED GALV. WEIGHT

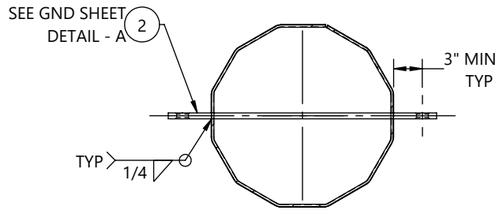

SECTION A-A

BY	DATE
DRAWN: MP	07/01/2026
CHK'D: EV	07/01/2026

CHM INDUSTRIES
700 E. McLEROY BLVD
SAGINAW, TEXAS 76179
682.286.0046 PH
682.286.0086 FX
CHMINDUSTRIES.COM

(SEE CHM IND., INC. PROCEDURE CHM-PR-1.7.3-F1 FOR STANDARD TOLERANCES)

REV.	ECR #	DESCRIPTION	APPROVED BY	DATE
1		SUBMITTAL FOR APPROVAL	EV	07/17/2026

REVISIONS

QTY: 1	GLM: (FT-K) 778.83	JOB NO. 12899	PART NO. 12899-00900-MID	DWG NO. 12899-00900

CUST NAME: GREENVILLE UTILITIES STEEL STRUCTURES-NC
STR #: 51 TYPE/CLASS-HEIGHT: S-09.0 - 90'-0"
DESCRIPTION: MIDDLE SECTION, 27.94 X 17.75 X 1/4" X 46'-9"

SCALE: NTS
DO NOT SCALE DRAWING
REV. 1 SHEET: 3 of 6

THIS DWG IS PROPERTY OF CHM INDUSTRIES AND CONTAINS PROPRIETARY INFORMATION WHICH MAY NOT BE COPIED OR REPRODUCED WITHOUT PRIOR WRITTEN CONSENT FROM CHM INDUSTRIES.

FINISH:	BLACK WEIGHT	GALVANIZED WEIGHT
GALVANIZED	1577 LBS	1672 LBS
WEIGHTS ABOVE INCLUDE ALL BOM ITEMS		

SEE GENERAL NOTES AND DETAILS SHEET FOR SUPPLEMENTARY INFORMATION

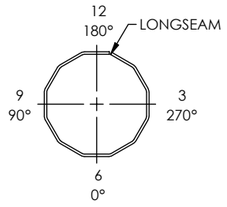

ORIENTATION DETAIL
TOP VIEW

ITEM #	PART #	DESCRIPTION	MAT'L	QTY.
1	12899-00900-SHT	SHAFT, 12S, 18.97" X 10.25" X 1/4" X 40'-0"	A572 GR65	1
2	12899-00900-TS	TOP STRAP, 9 5/8" X 2" X 3/16"	A572 GR65	1
3	12899-00900-CP	COVER PLATE, Ø11 5/8" X 3/16"	A572 GR65	1
4	12899-00900-VS201	VANG, OBROUND, 2-SIDED, 19 3/8" X 3" X 5/8"	A572 GR65	1
5	42120	BOLT, 1/2-13 X 1-3/4", HDG, HH, A307 A	A307-A	1
6	44018	WASHER, FLAT, 1/2", HDG, F436 T1	F436-T1	1
7	43010	NUT, HEAVY HEX, 1/2-13, HDG, A563 DH	A563-DH	1
8	43026	NUT, HEAVY HEX, 1-8, A563 DH3	A563-DH3	4
9	43029	NUT, HEX, 1/2-13, BLK, A563 DH	A563-DH	1
10	B22011	4X4 ID TAG, A588	A588	1

GREENVILLE UTILITIES STEEL STRUCTURES-NC
STR#: 51, S-09.0 - 90'-0"
SEC WT: 1672 LBS
DOM: [mm/YYYY]
CHM-12899-00900
12899-00900-TOP

ID TAG

TEXT TO BE 7/16" LETTERS
TAGS TO BE ORIENTED ON 0° FLAT
WEIGHT ON ID TAG IS FINISHED GALV. WEIGHT

HOLE CHART		
HOLE SIZE (INCH)	DISTANCE FROM TOP OF SHAFT	FLAT(S)
13/16"	8' - 0"	3, 9
13/16"	9' - 0"	3, 9
13/16"	14' - 0"	3, 9
13/16"	15' - 0"	3, 9
13/16"	20' - 0"	3, 9
13/16"	21' - 0"	3, 9
11/16"	29' - 0"	6,12
11/16"	30' - 0"	6,12
11/16"	33' - 0"	6,12
11/16"	34' - 0"	6,12
11/16"	37' - 0"	6,12
11/16"	38' - 0"	6,12

CUSTOMER PLEASE VERIFY
HOLE AT 37'-0" & 38'-0"
ELEVATIONS ARE FALLING
IN BETWEEN SLIP JOINT.
PLEASE SUGGEST.

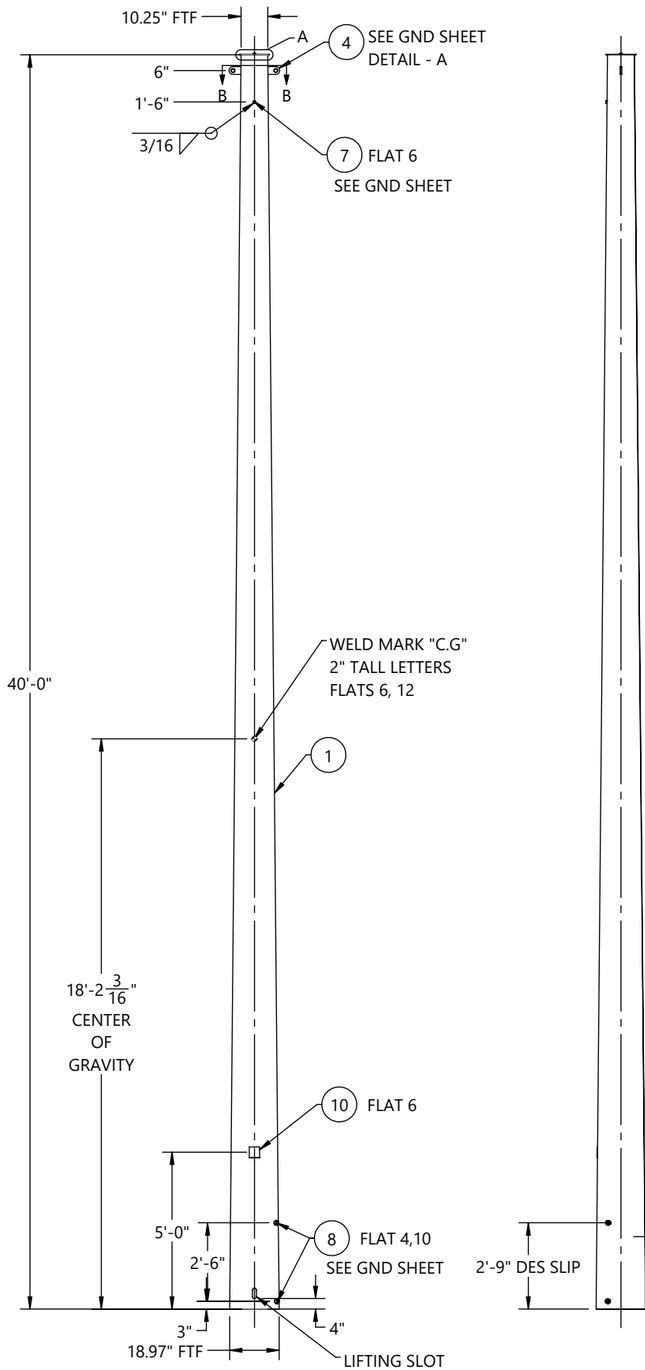

FRONT VIEW
(LOOKING @ 0° REF
ORIENTATION DETAIL)

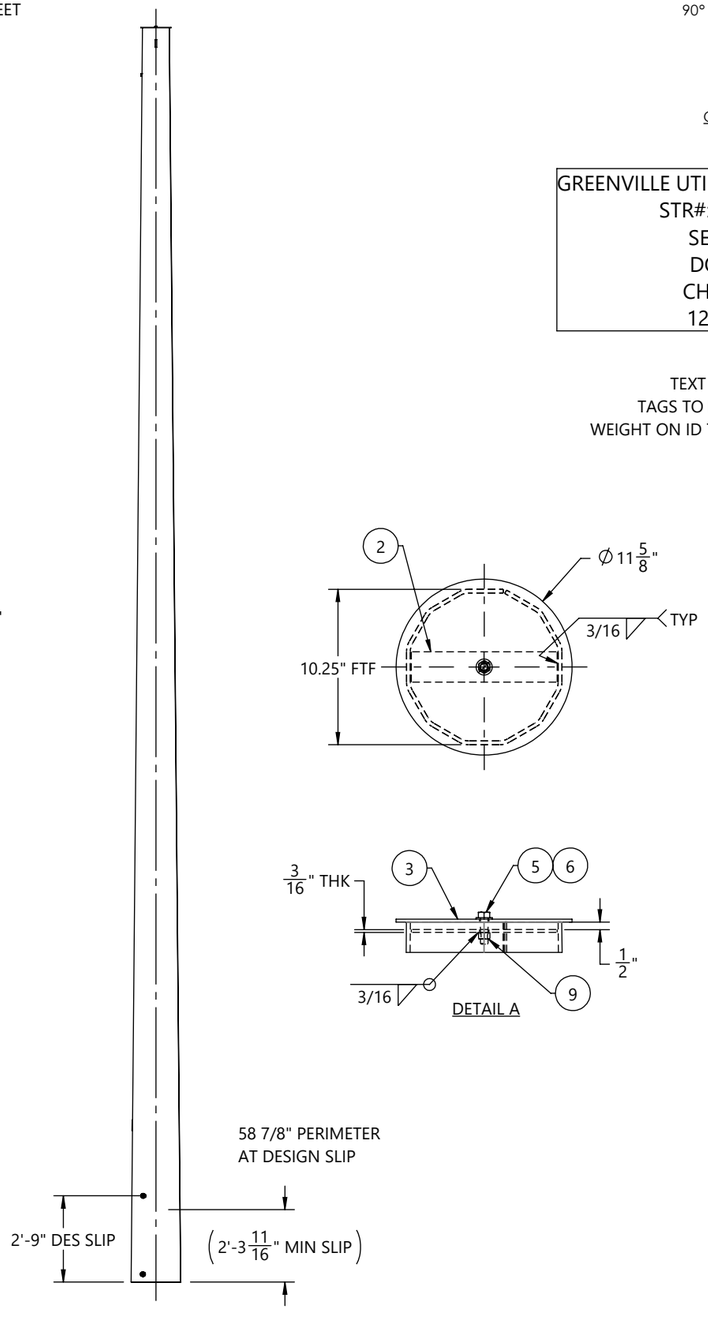

SIDE VIEW
(LOOKING @ 270° REF
ORIENTATION DETAIL)

DETAIL A

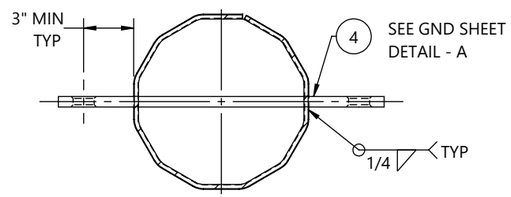

SECTION B-B

REV.	ECR #	DESCRIPTION	APPROVED BY	DATE
1		SUBMITTAL FOR APPROVAL	EV	07/17/2026

REVISIONS

BY		DATE
DRAWN:	MP	07/01/2026
CHK'D:	EV	07/01/2026

CHM INDUSTRIES
700 E. McLEROY BLVD
SAGINAW, TEXAS 76179
682.286.0046 PH
682.286.0086 FX
CHMINDUSTRIES.COM

(SEE CHM IND., INC. PROCEDURE CHM-PR-1.7.3-F1 FOR STANDARD TOLERANCES)

QTY: 1	GLM: (FT-K) 778.83	JOB NO. 12899	PART NO. 12899-00900-TOP	DWG NO. 12899-00900

CUST NAME: GREENVILLE UTILITIES STEEL STRUCTURES-NC
STR #: 51 TYPE/CLASS-HEIGHT: S-09.0 - 90'-0"
DESCRIPTION: TOP SECTION, 18.97" X 10.25" X 1/4" X 40'-0"

SCALE: NTS
DO NOT SCALE DRAWING
REV: 1
SHEET: 4 of 6

THIS DWG IS PROPERTY OF CHM INDUSTRIES AND CONTAINS PROPRIETARY INFORMATION WHICH MAY NOT BE COPIED OR REPRODUCED WITHOUT PRIOR WRITTEN CONSENT FROM CHM INDUSTRIES.

SEE GENERAL NOTES AND DETAILS SHEET FOR SUPPLEMENTARY INFORMATION

INDIVIDUAL STRUCTURE BILL OF MATERIALS			
ITEM NO.	PART NUMBER	DESCRIPTION	QTY.
1	12899-00900-BOT	BOTTOM SECTION, 28.18" X 26.33" X 5/16" X 8'-6"	1
1.1	12899-00900-SHB	SHAFT, 12S, 28.18" X 26.33" X 5/16" X 8'-6"	1
1.2	B22011	4X4 ID TAG, A588	1
1.3	43026	NUT, HEAVY HEX, 1-8, A563 DH3	4
1.4	ASSY-00900-CAS-SNG	SINGLE SECTION, 28.18" X 28.18" X 5/16" X 26'-0"	1
1.4.1	12899-00900-CAS-SHS	SHAFT, 12S, 28.18" X 28.18" X 5/16" X 26'-0"	1
1.4.2	12899-00900-CAS-SHG	GND SLV HALF, 12S, 28.56" X 28.56" X 3/16" X 4'-0"	2
1.4.3	12899-00900-PLT	SPLICE PLATE, Ø35 3/16" X 1"	1
1.5	43009	NUT, HEX, 1/2-13, HDG, A563 DH	1
1.6	12899-00900-EAR	DRIVING EAR, 1'-0" X 1'-2 3/8" X1"	2
2	12899-00900-MID	MIDDLE SECTION, 27.94 X 17.75 X 1/4" X 46'-9"	1
2.1	12899-00900-SHM	SHAFT, 12S, 27.94" X 17.75" X 1/4" X 46'-9"	1
2.2	B22011	4X4 ID TAG, A588	1
2.3	43026	NUT, HEAVY HEX, 1-8, A563 DH3	8
2.4	12899-00900-VS202	VANG, OBROUND, 2-SIDED, 28 5/16" X 3" X 5/8"	1
2.5	43010	NUT, HEAVY HEX, 1/2-13, HDG, A563 DH	1
3	12899-00900-TOP	TOP SECTION, 18.97" X 10.25" X 1/4" X 40'-0"	1
3.1	12899-00900-SHT	SHAFT, 12S, 18.97" X 10.25" X 1/4" X 40'-0"	1
3.2	12899-00900-TS	TOP STRAP, 9 5/8" X 2" X 3/16"	1
3.3	12899-00900-VS201	VANG, OBROUND, 2-SIDED, 19 3/8" X 3" X 5/8"	1
3.4	B22011	4X4 ID TAG, A588	1
3.5	43026	NUT, HEAVY HEX, 1-8, A563 DH3	4
3.6	43010	NUT, HEAVY HEX, 1/2-13, HDG, A563 DH	1
3.7	43029	NUT, HEX, 1/2-13, BLK, A563 DH	1
3.8	12899-00900-CP	COVER PLATE, Ø11 5/8" X 3/16"	1
3.9	44018	WASHER, FLAT, 1/2", HDG, F436 T1	1
3.10	42120	BOLT, 1/2-13 X 1-3/4", HDG, HH, A307 A	1

BY		DATE
DRAWN:	MP	07/01/2026
CHK'D:	EV	07/01/2026

CHM INDUSTRIES
700 E. McLEROY BLVD
SAGINAW, TEXAS 76179
682.286.0046 PH
682.286.0086 FX
CHMINDUSTRIES.COM

(SEE CHM IND., INC. PROCEDURE CHM-PR-1.7.3-F1 FOR STANDARD TOLERANCES)

QTY: 1 | GLM: (FT-K) 778.83 | JOB NO. 12899 | PART NO. 12899-00900-SBOM | DWG NO. 12899-00900

CUST NAME: GREENVILLE UTILITIES STEEL STRUCTURES-NC

STR #: 51 TYPE/CLASS-HEIGHT: S-09.0 - 90'-0"

DESCRIPTION: STRUCTURE, 28.18" X 10.25" X 88'-0"

SCALE: NTS DO NOT SCALE DRAWING

REV. 1 | SHEET: 5 of 6

THIS DWG IS PROPERTY OF CHM INDUSTRIES AND CONTAINS PROPRIETARY INFORMATION WHICH MAY NOT BE COPIED OR REPRODUCED WITHOUT PRIOR WRITTEN CONSENT FROM CHM INDUSTRIES.

SEE GENERAL NOTES AND DETAILS SHEET FOR SUPPLEMENTARY INFORMATION

TOTAL JOB MATERIAL REQUIREMENTS				
ITEM NO.	PART NUMBER	DESCRIPTION	QTY.	JOB QTY.
1	42120	BOLT, 1/2-13 X 1-3/4", HDG, HH, A307 A	1	1
2	43026	NUT, HEAVY HEX, 1-8, A563 DH3	16	16
3	43029	NUT, HEX, 1/2-13, BLK, A563 DH	1	1
4	44018	WASHER, FLAT, 1/2", HDG, F436 T1	1	1
5	12899-00900-VS201	VANG, OBROUND, 2-SIDED, 19 3/8" X 3" X 5/8"	1	1
6	12899-00900-CP	COVER PLATE, Ø11 5/8" X 3/16"	1	1
7	12899-00900-SHB	SHAFT, 12S, 28.18" X 26.33" X 5/16" X 8'-6"	1	1
8	12899-00900-SHM	SHAFT, 12S, 27.94" X 17.75" X 1/4" X 46'-9"	1	1
9	12899-00900-SHT	SHAFT, 12S, 18.97" X 10.25" X 1/4" X 40'-0"	1	1
10	12899-00900-TS	TOP STRAP, 9 5/8" X 2" X 3/16"	1	1
11	12899-00900-VS202	VANG, OBROUND, 2-SIDED, 28 5/16" X 3" X 5/8"	1	1
12	43010	NUT, HEAVY HEX, 1/2-13, HDG, A563 DH	2	2
13	B22011	4X4 ID TAG, A588	3	3
14	12899-00900-CAS-SHS	SHAFT, 12S, 28.18" X 28.18" X 5/16" X 26'-0"	1	1
15	12899-00900-CAS-SHG	GND SLV HALF, 12S, 28.56" X 28.56" X 3/16" X 4'-0"	2	2
16	12899-00900-PLT	SPLICE PLATE, Ø35 3/16" X 1"	1	1
17	43009	NUT, HEX, 1/2-13, HDG, A563 DH	1	1
18	12899-00900-EAR	DRIVING EAR, 1'-0" X 1'-2 3/8" X1"	2	2

BY	DATE
DRAWN: MP	07/01/2026
CHK'D: EV	07/01/2026

CHM INDUSTRIES

700 E. McLEROY BLVD
SAGINAW, TEXAS 76179
682.286.0046 PH
682.286.0086 FX
CHMINDUSTRIES.COM

(SEE CHM IND., INC. PROCEDURE CHM-PR-1.7.3-F1 FOR STANDARD TOLERANCES)

QTY: 1	GLM: (FT-K) 778.83	JOB NO. 12899	PART NO. 12899-00900-PBOM	DWG NO. 12899-00900

CUST NAME: GREENVILLE UTILITIES STEEL STRUCTURES-NC
STR #: 51 TYPE/CLASS-HEIGHT: S-09.0 - 90'-0"
DESCRIPTION: STRUCTURE, 28.18" X 10.25" X 88'-0"

SCALE: NTS DO NOT SCALE DRAWING
REV: 1 SHEET: 6 of 6

THIS DWG IS PROPERTY OF CHM INDUSTRIES AND CONTAINS PROPRIETARY INFORMATION WHICH MAY NOT BE COPIED OR REPRODUCED WITHOUT PRIOR WRITTEN CONSENT FROM CHM INDUSTRIES.

FINISH:	BLACK WEIGHT	GALVANIZED WEIGHT
GALVANIZED	11339 LBS	12019 LBS
WEIGHTS ABOVE INCLUDE ALL BOM ITEMS		

SEE GENERAL NOTES AND DETAILS SHEET FOR SUPPLEMENTARY INFORMATION

ITEM #	PART #	DESCRIPTION	QTY.
1	12899-01000-BOT	BOTTOM SECTION, 33.98" X 32.06" X 5/16" X 8'-9"	1
2	12899-01000-MID	MIDDLE SECTION, 33.85" X 24.45" X 5/16" X 42'-9"	1
3	12899-01000-TOP	TOP SECTION, 25.90" X 16.00" X 1/4" X 45'-0"	1

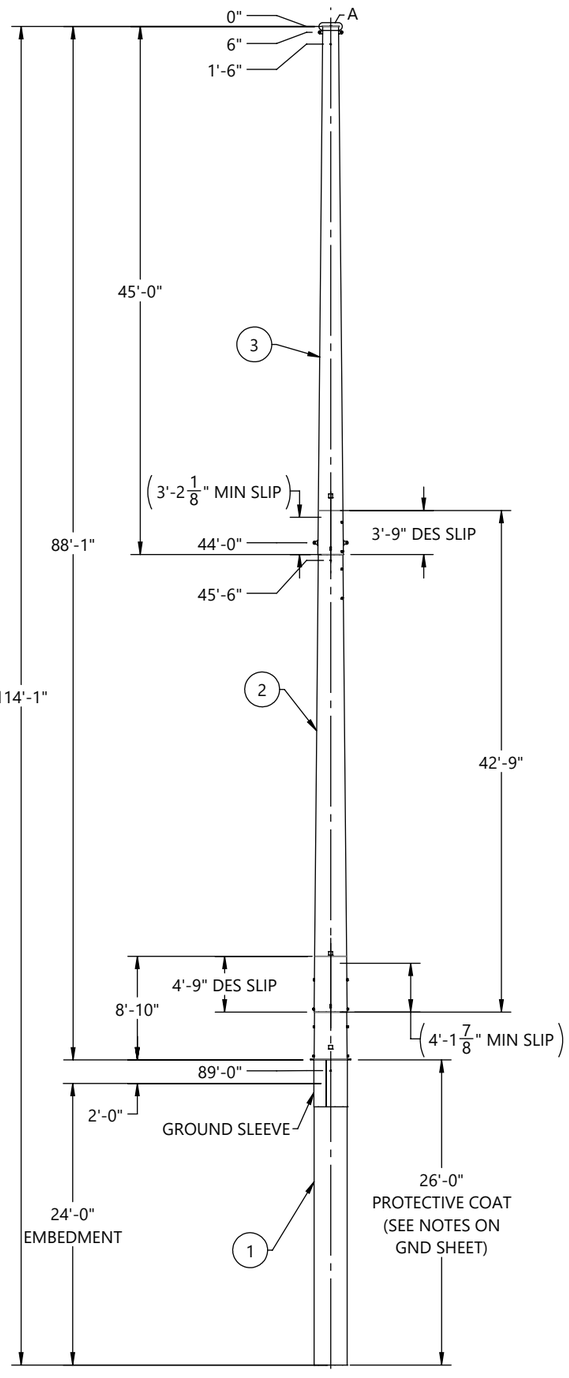

FRONT VIEW
(LOOKING @ 0° REF
ORIENTATION DETAIL)

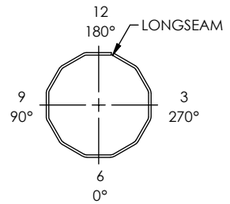

ORIENTATION DETAIL
TOP VIEW

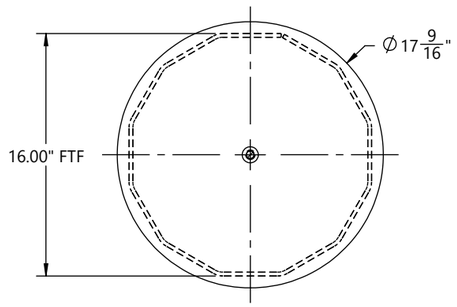

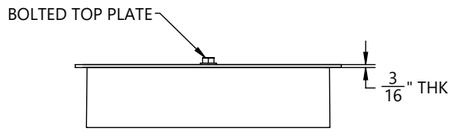

DETAIL A

HOLE CHART		
HOLE SIZE (INCH)	DISTANCE FROM TOP OF SHAFT	FLAT(S)
13/16"	8' - 0"	3, 9
13/16"	9' - 0"	3, 9
13/16"	14' - 0"	3, 9
13/16"	15' - 0"	3, 9
13/16"	20' - 0"	3, 9
13/16"	21' - 0"	3, 9
11/16"	29' - 0"	6, 12
11/16"	30' - 0"	6, 12
11/16"	33' - 0"	6, 12
11/16"	34' - 0"	6, 12
11/16"	37' - 0"	6, 12
11/16"	38' - 0"	6, 12

REV.	ECR #	DESCRIPTION	APPROVED BY	DATE
1		SUBMITTAL FOR APPROVAL	EV	07/17/2026

REVISIONS

BY	DATE
DRAWN: MP	06/29/2026
CHK'D: EV	06/29/2026

CHM INDUSTRIES
700 E. McLEROY BLVD
SAGINAW, TEXAS 76179
682.286.0046 PH
682.286.0086 FX
CHMINDUSTRIES.COM

(SEE CHM IND., INC. PROCEDURE CHM-PR-1.7.3-F1 FOR STANDARD TOLERANCES)

QTY: 1 | GLM: (FT-K) 1468.1 | JOB NO. 12899 | PART NO. 12899-01000-MN | DWG NO. 12899-01000

CUST NAME: GREENVILLE UTILITIES STEEL STRUCTURES- NC

STR #: 52 TYPE/CLASS-HEIGHT: S17-90'-0"

DESCRIPTION: STRUCTURE, 33.98" X 16.00" X 88'-0"

SCALE: NTS DO NOT SCALE DRAWING

REV. 1 | SHEET: 1 of 6

THIS DWG IS PROPERTY OF CHM INDUSTRIES AND CONTAINS PROPRIETARY INFORMATION WHICH MAY NOT BE COPIED OR REPRODUCED WITHOUT PRIOR WRITTEN CONSENT FROM CHM INDUSTRIES.

FINISH:	BLACK WEIGHT	GALVANIZED WEIGHT
GALVANIZED	4565 LBS	4839 LBS
WEIGHTS ABOVE INCLUDE ALL BOM ITEMS		

SEE GENERAL NOTES AND DETAILS SHEET FOR SUPPLEMENTARY INFORMATION

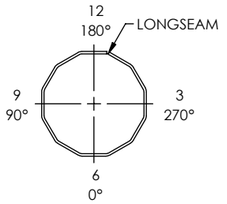

ORIENTATION DETAIL
TOP VIEW

ITEM #	PART #	DESCRIPTION	MAT'L	QTY.
1	12899-01000-SHB	SHAFT, 12S, 33.98" X 32.06" X 5/16" X 8'-9"	A572 GR65	1
2	12899-01000-CAS-SHS	SHAFT, 12S, 33.98" X 33.98" X 5/16" X 26'-0"	A572 GR65	1
3	12899-01000-CAS-SHG	GND SLV HALF, 12S, 34.36" X 34.36" X 3/16" X 4'-0"	A572 GR65	2
4	12899-01000-PLT	SPLICE PLATE, Ø41" X 1"	A572 GR65	1
5	12899-01000-EAR	DRIVING EAR, 1'-0" X 1'-4 9/16" X1"	A572 GR65	2
6	B22011	4X4 ID TAG, A588	A588	1
7	43026	NUT, HEAVY HEX, 1-8, A563 DH3	A563-DH3	4
8	43010	NUT, HEAVY HEX, 1/2-13, HDG, A563 DH	A563-DH	1

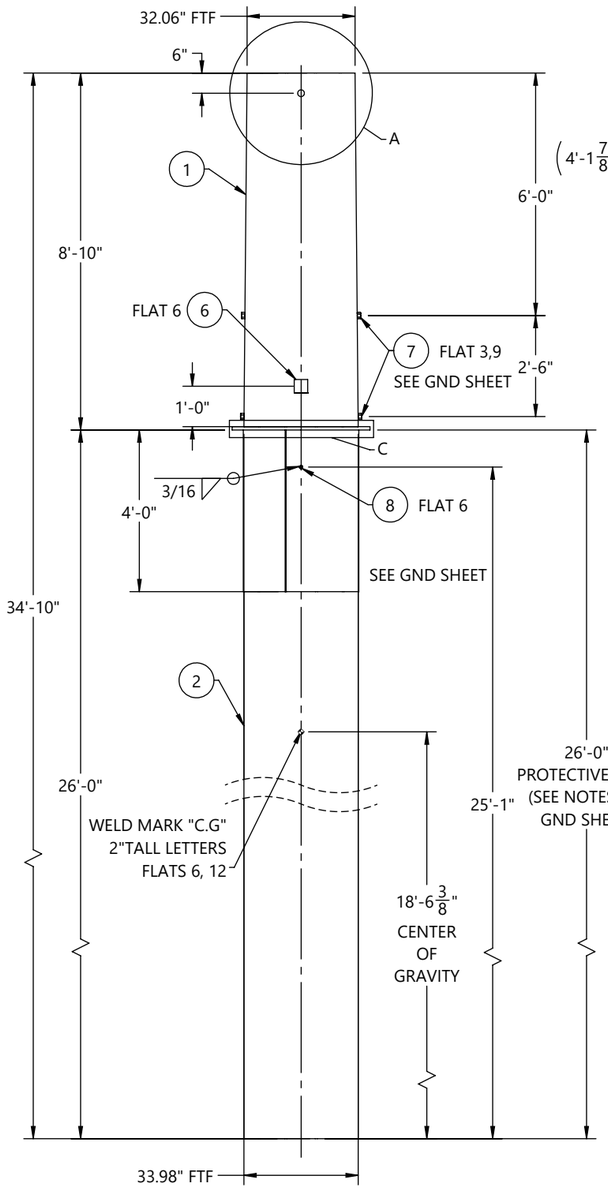

FRONT VIEW
(LOOKING @ 0° REF
ORIENTATION DETAIL)

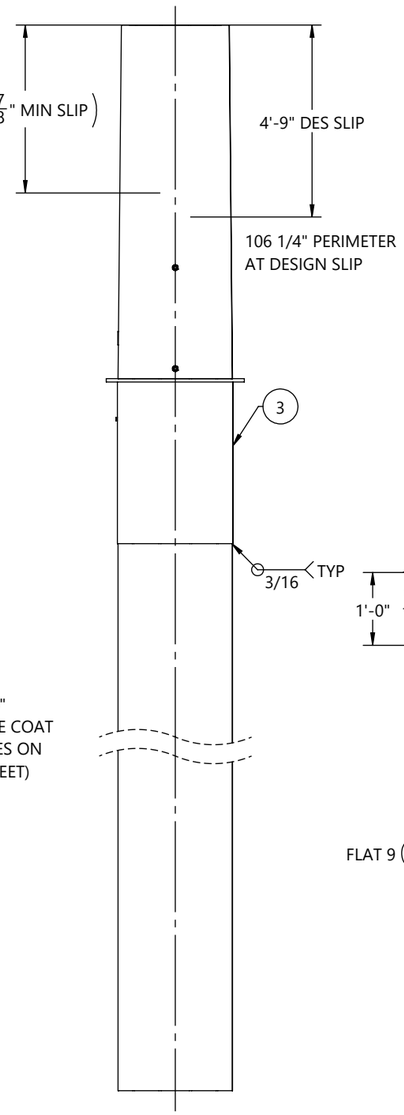

SIDE VIEW
(LOOKING @ 270° REF
ORIENTATION DETAIL)

GREENVILLE UTILITIES STEEL STRUCTURES- NC
STR#: 52, S17-90'-0"
GLM: 1468.1 FT-K
STR WT: 12019 LBS
SEC WT: 4839 LBS
DOM: [mm/YYYY]
CHM-12899-01000
12899-01000-BOT

ID TAG

TEXT TO BE 7/16" LETTERS
TAGS TO BE ORIENTED ON 0° FLAT
WEIGHT ON ID TAG IS FINISHED GALV. WEIGHT

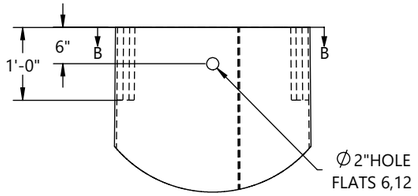

DETAIL A

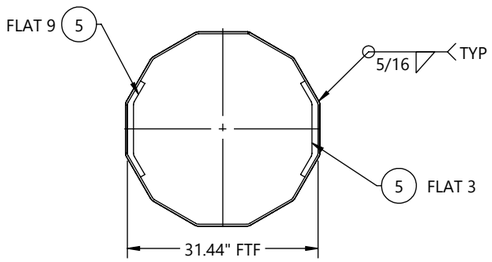

SECTION B-B

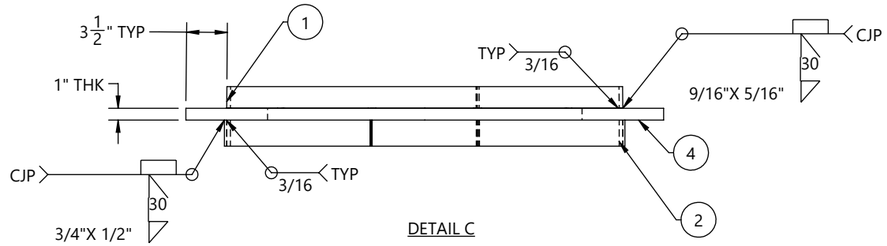

DETAIL C

REV.	ECR #	DESCRIPTION	APPROVED BY	DATE
1		SUBMITTAL FOR APPROVAL	EV	07/17/2026

REVISIONS

BY	DATE
DRAWN: MP	06/29/2026
CHK'D: EV	06/29/2026

(SEE CHM IND., INC. PROCEDURE CHM-PR-1.7.3-F1 FOR STANDARD TOLERANCES)

CHM INDUSTRIES
700 E. McLEROY BLVD
SAGINAW, TEXAS 76179
682.286.0046 PH
682.286.0086 FX
CHMINDUSTRIES.COM

QTY: 1 | GLM: (FT-K) 1468.1 | JOB NO. 12899 | PART NO. 12899-01000-BOT | DWG NO. 12899-01000

CUST NAME: GREENVILLE UTILITIES STEEL STRUCTURES- NC
STR #: 52 TYPE/CLASS-HEIGHT: S17-90'-0"
DESCRIPTION: BOTTOM SECTION, 33.98" X 32.06" X 5/16" X 8'-9"

SCALE: NTS DO NOT SCALE DRAWING
REV. 1 | SHEET: 2 of 6

THIS DWG IS PROPERTY OF CHM INDUSTRIES AND CONTAINS PROPRIETARY INFORMATION WHICH MAY NOT BE COPIED OR REPRODUCED WITHOUT PRIOR WRITTEN CONSENT FROM CHM INDUSTRIES.

FINISH:	BLACK WEIGHT	GALVANIZED WEIGHT
GALVANIZED	4200 LBS	4452 LBS
WEIGHTS ABOVE INCLUDE ALL BOM ITEMS		

SEE GENERAL NOTES AND DETAILS SHEET FOR SUPPLEMENTARY INFORMATION

ITEM #	PART #	DESCRIPTION	MAT'L	QTY.
1	12899-01000-SHM	SHAFT, 12S, 33.85" X 24.45" X 5/16" X 42'-9"	A572 GR65	1
2	43010	NUT, HEAVY HEX, 1/2-13, HDG, A563 DH	A563-DH	1
3	43026	NUT, HEAVY HEX, 1-8, A563 DH3	A563-DH3	8
4	B22011	4X4 ID TAG, A588	A588	1

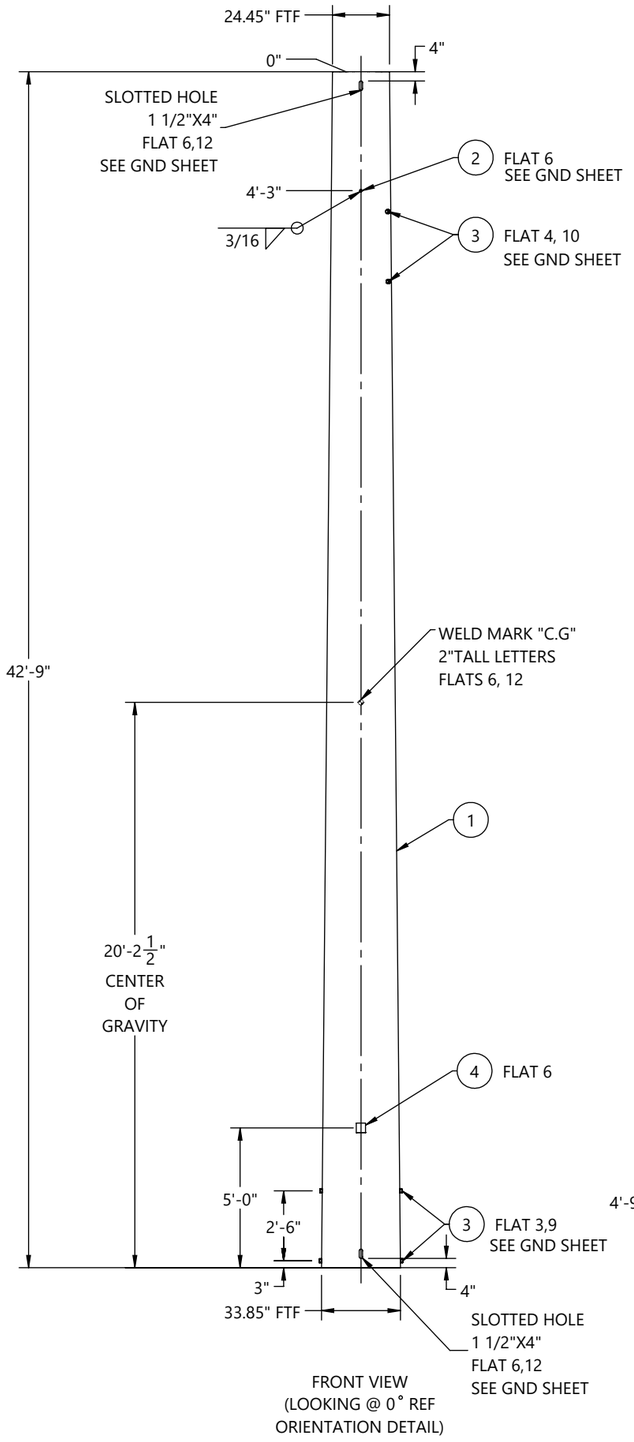

FRONT VIEW
(LOOKING @ 0° REF
ORIENTATION DETAIL)

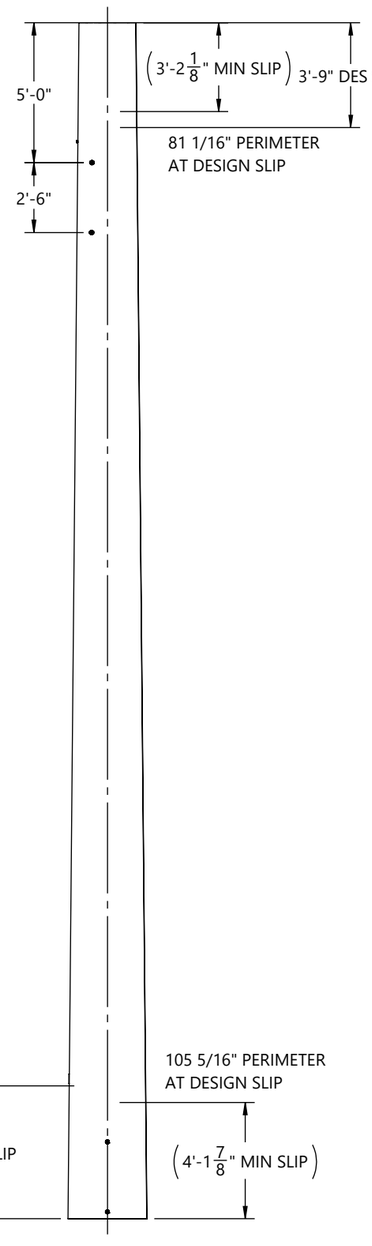

SIDE VIEW
(LOOKING @ 270° REF
ORIENTATION DETAIL)

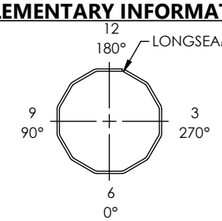

ORIENTATION DETAIL
TOP VIEW

GREENVILLE UTILITIES STEEL STRUCTURES- NC
STR#: 52, S17-90'-0"
SEC WT: 4452 LBS
DOM: [mm/YYYY]
CHM-12899-01000
12899-01000-MID

ID TAG

TEXT TO BE 7/16" LETTERS
TAGS TO BE ORIENTED ON 0° FLAT
WEIGHT ON ID TAG IS FINISHED GALV. WEIGHT

BY	DATE
DRAWN: MP	06/29/2026
CHK'D: EV	06/29/2026

(SEE CHM IND., INC. PROCEDURE CHM-PR-1.7.3-F1 FOR STANDARD TOLERANCES)

REV.	ECR #	DESCRIPTION	APPROVED BY	DATE
1		SUBMITTAL FOR APPROVAL	EV	07/17/2026

REVISIONS

CHM INDUSTRIES
700 E. McLEROY BLVD
SAGINAW, TEXAS 76179
682.286.0046 PH
682.286.0086 FX
CHMINDUSTRIES.COM

QTY: 1 | GLM: (FT-K) 1468.1 | JOB NO. 12899 | PART NO. 12899-01000-MID | DWG NO. 12899-01000

CUST NAME: GREENVILLE UTILITIES STEEL STRUCTURES- NC
STR #: 52 TYPE/CLASS-HEIGHT: S17-90'-0"
DESCRIPTION: MIDDLE SECTION, 33.85" X 24.45" X 5/16" X 42'-9"

SCALE: NTS DO NOT SCALE DRAWING | REV. 1 | SHEET: 3 of 6

THIS DWG IS PROPERTY OF CHM INDUSTRIES AND CONTAINS PROPRIETARY INFORMATION WHICH MAY NOT BE COPIED OR REPRODUCED WITHOUT PRIOR WRITTEN CONSENT FROM CHM INDUSTRIES.

FINISH:	BLACK WEIGHT	GALVANIZED WEIGHT
GALVANIZED	2575 LBS	2730 LBS
WEIGHTS ABOVE INCLUDE ALL BOM ITEMS		

SEE GENERAL NOTES AND DETAILS SHEET FOR SUPPLEMENTARY INFORMATION

ITEM #	PART #	DESCRIPTION	MAT'L	QTY.
1	12899-01000-SHT	SHAFT, 12S, 25.90" X 16.00" X 1/4" X 45'-0"	A572 GR65	1
2	12899-01000-TS	TOP STRAP, 15 3/8" X 2" X 3/16"	A572 GR65	1
3	12899-01000-CP	COVER PLATE, Ø17 9/16" X 3/16"	A572 GR65	1
4	12899-01000-VS201	VANG, OBROUND, 2-SIDED, 25 1/8" X 3" X 5/8"	A572 GR65	1
5	12899-01000-VS01	VANG, OBROUND, 1-SIDED, 3" X 4 1/2" X 5/8"	A871 GR65	2
6	12899-01000-DP01	DOUBLER PLATE, 4" X 5" X 5/8"	A572 GR65	2
7	44018	WASHER, FLAT, 1/2", HDG, F436 T1	F436-T1	1
8	43029	NUT, HEX, 1/2-13, BLK, A563 DH	A563-DH	1
7	43026	NUT, HEAVY HEX, 1-8, A563 DH3	A563-DH3	4
10	43010	NUT, HEAVY HEX, 1/2-13, HDG, A563 DH	A563-DH	1
11	42120	BOLT, 1/2-13 X 1-3/4", HDG, HH, A307 A	A307-A	1
12	B22011	4X4 ID TAG, A588	A588	1

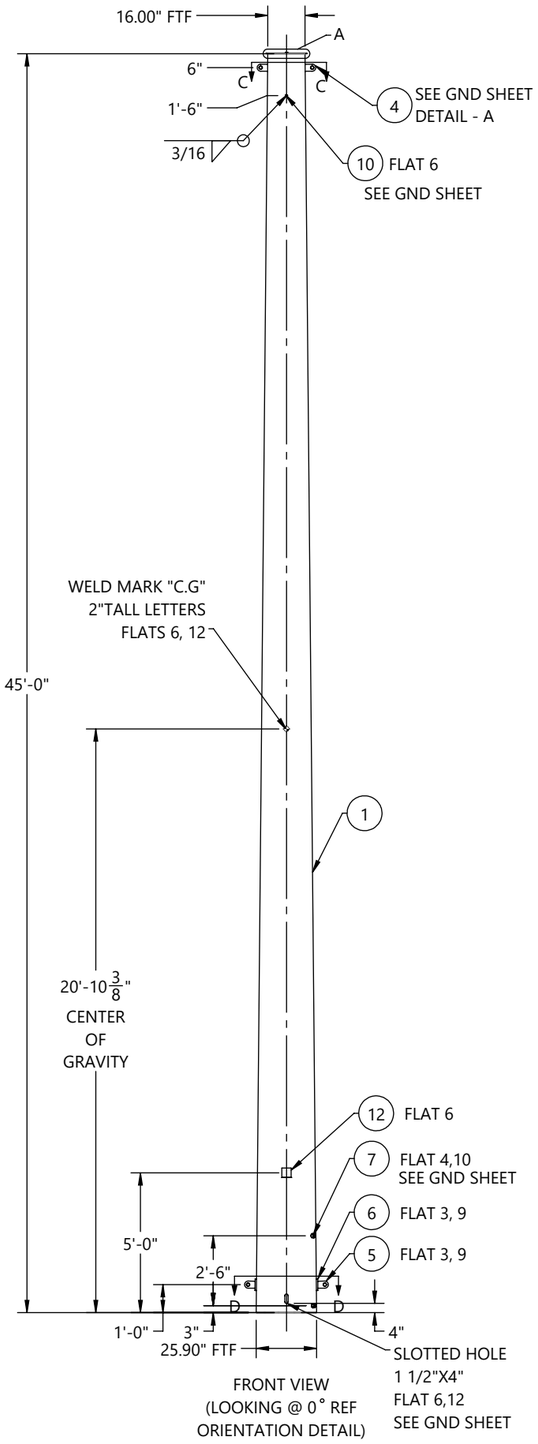

FRONT VIEW
(LOOKING @ 0° REF ORIENTATION DETAIL)

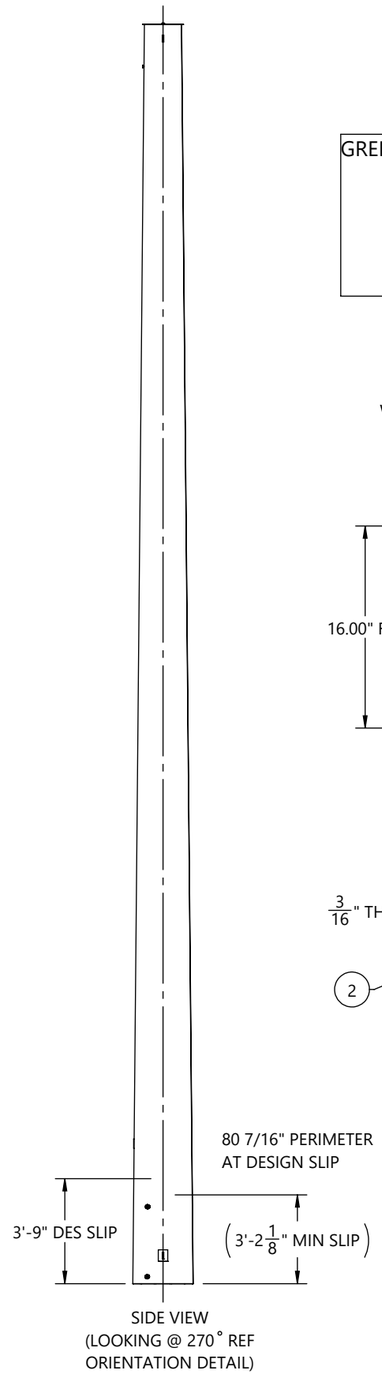

SIDE VIEW
(LOOKING @ 270° REF ORIENTATION DETAIL)

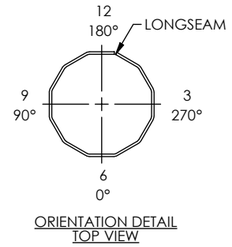

ORIENTATION DETAIL
TOP VIEW

GREENVILLE UTILITIES STEEL STRUCTURES- NC
STR#: 52, S17-90'-0"
SEC WT: 2730 LBS
DOM: [mm/YYYY]
CHM-12899-01000
12899-01000-TOP

ID TAG

TEXT TO BE 7/16" LETTERS
TAGS TO BE ORIENTED ON 0° FLAT
WEIGHT ON ID TAG IS FINISHED GALV. WEIGHT

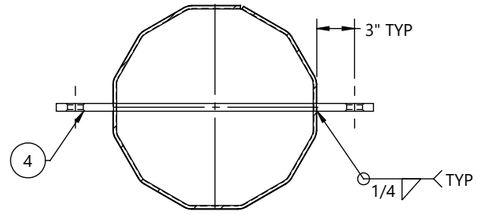

HOLE CHART		
HOLE SIZE (INCH)	DISTANCE FROM TOP OF SHAFT	FLAT(S)
13/16"	8' - 0"	3, 9
13/16"	9' - 0"	3, 9
13/16"	14' - 0"	3, 9
13/16"	15' - 0"	3, 9
13/16"	20' - 0"	3, 9
13/16"	21' - 0"	3, 9
11/16"	29' - 0"	6, 12
11/16"	30' - 0"	6, 12
11/16"	33' - 0"	6, 12
11/16"	34' - 0"	6, 12
11/16"	37' - 0"	6, 12
11/16"	38' - 0"	6, 12

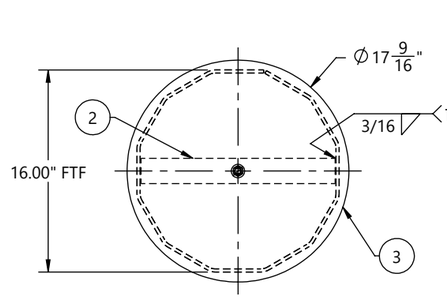

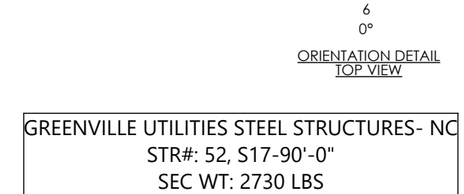

DETAIL A

SECTION C-C

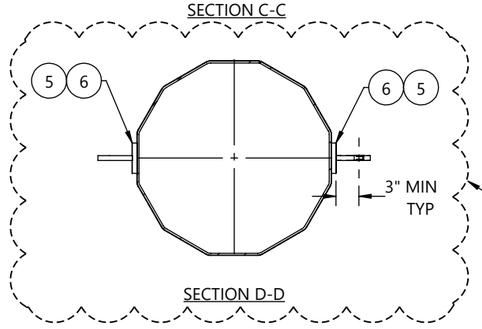

SECTION D-D

CUSTOMER PLEASE VERIFY,
AT THIS ELEVATION THRU VANG FALLING IN BETWEEN SLIP JOINT. TO AVOID INTERFERENCE IN SLIP JOINT , WE HAVE DETAILED VANG WITH DOUBLER PLATE.

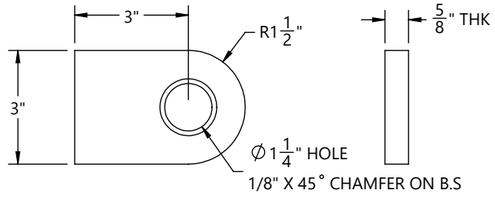

12899-01000-VS01

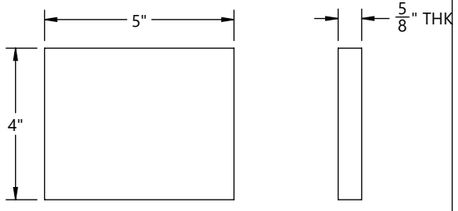

12899-01000-DP01

REV.	ECR #	DESCRIPTION	APPROVED BY	DATE
1		SUBMITTAL FOR APPROVAL	EV	07/17/2026

REVISIONS

BY		DATE
DRAWN:	MP	06/29/2026
CHK'D:	EV	06/29/2026

CHM INDUSTRIES
700 E. McLEROY BLVD
SAGINAW, TEXAS 76179
682.286.0046 PH
682.286.0086 FX
CHMINDUSTRIES.COM

(SEE CHM IND., INC. PROCEDURE CHM-PR-1.7.3-F1 FOR STANDARD TOLERANCES)

QTY: 1 | GLM: (FT-K) 1468.1 | JOB NO. 12899 | PART NO. 12899-01000-TOP | DWG NO. 12899-01000

CUST NAME: GREENVILLE UTILITIES STEEL STRUCTURES- NC
STR #: 52 TYPE/CLASS-HEIGHT: S17-90'-0"
DESCRIPTION: TOP SECTION, 25.90" X 16.00" X 1/4" X 45'-0"

SCALE: NTS DO NOT SCALE DRAWING
REV. 1 | SHEET: 4 of 6

THIS DWG IS PROPERTY OF CHM INDUSTRIES AND CONTAINS PROPRIETARY INFORMATION WHICH MAY NOT BE COPIED OR REPRODUCED WITHOUT PRIOR WRITTEN CONSENT FROM CHM INDUSTRIES.

SEE GENERAL NOTES AND DETAILS SHEET FOR SUPPLEMENTARY INFORMATION

TOTAL JOB MATERIAL REQUIREMENTS			
ITEM NO.	PART NUMBER	DESCRIPTION	QTY.
1	12899-01000-BOT	BOTTOM SECTION, 33.98" X 32.06" X 5/16" X 8'-9"	1
1.1	12899-01000-SHB	SHAFT, 12S, 33.98" X 32.06" X 5/16" X 8'-9"	1
1.2	B22011	4X4 ID TAG, A588	1
1.3	43026	NUT, HEAVY HEX, 1-8, A563 DH3	4
1.4	43010	NUT, HEAVY HEX, 1/2-13, HDG, A563 DH	1
1.5	ASSY-01000-CAS-MN	STRUCTURE, 33.98" X 33.98" X 26'-0"	1
1.5.1	ASSY-01000-CAS-SNG	SINGLE SECTION, 33.98" X 33.98" X 5/16" X 26'-0"	1
1.5.1.1	12899-01000-CAS-SHS	SHAFT, 12S, 33.98" X 33.98" X 5/16" X 26'-0"	1
1.5.1.2	12899-01000-CAS-SHG	GND SLV HALF, 12S, 34.36" X 34.36" X 3/16" X 4'-0"	2
1.5.1.3	12899-01000-PLT	SPLICE PLATE, Ø41" X 1"	1
1.6	12899-01000-EAR	DRIVING EAR, 1'-0" X 1'-4 9/16" X1"	2
2	12899-01000-MID	MIDDLE SECTION, 33.85" X 24.45" X 5/16" X 42'-9"	1
2.1	12899-01000-SHM	SHAFT, 12S, 33.85" X 24.45" X 5/16" X 42'-9"	1
2.2	B22011	4X4 ID TAG, A588	1
2.3	43026	NUT, HEAVY HEX, 1-8, A563 DH3	8
2.4	43010	NUT, HEAVY HEX, 1/2-13, HDG, A563 DH	1
3	12899-01000-TOP	TOP SECTION, 25.90" X 16.00" X 1/4" X 45'-0"	1
3.1	12899-01000-SHT	SHAFT, 12S, 25.90" X 16.00" X 1/4" X 45'-0"	1
3.2	12899-01000-TS	TOP STRAP, 15 3/8" X 2" X 3/16"	1
3.3	12899-01000-VS201	VANG, OBROUND, 2-SIDED, 25 1/8" X 3" X 5/8"	1
3.4	B22011	4X4 ID TAG, A588	1
3.5	43026	NUT, HEAVY HEX, 1-8, A563 DH3	4
3.6	43010	NUT, HEAVY HEX, 1/2-13, HDG, A563 DH	1
3.7	43029	NUT, HEX, 1/2-13, BLK, A563 DH	1
3.8	12899-01000-CP	COVER PLATE, Ø17 9/16" X 3/16"	1
3.9	44018	WASHER, FLAT, 1/2", HDG, F436 T1	1
3.10	42120	BOLT, 1/2-13 X 1-3/4", HDG, HH, A307 A	1
3.11	12899-01000-VS01	VANG, OBROUND, 1-SIDED, 3" X 4 1/2" X 5/8"	2
3.12	12899-01000-DP01	DOUBLER PLATE, 4" X 5" X 5/8"	2

BY		DATE
DRAWN:	MP	06/29/2026
CHK'D:	EV	06/29/2026

CHM INDUSTRIES
700 E. McLEROY BLVD
SAGINAW, TEXAS 76179
682.286.0046 PH
682.286.0086 FX
CHMINDUSTRIES.COM

(SEE CHM IND., INC. PROCEDURE CHM-PR-1.7.3-F1 FOR STANDARD TOLERANCES)

QTY: 1 | GLM: (FT-K) 1468.1 | JOB NO. 12899 | PART NO. 12899-01000-SBOM | DWG NO. 12899-01000

CUST NAME: GREENVILLE UTILITIES STEEL STRUCTURES- NC
STR #: 52 TYPE/CLASS-HEIGHT: S17-90'-0"
DESCRIPTION: STRUCTURE, 33.98" X 16.00" X 88'-0"

SCALE: NTS DO NOT SCALE DRAWING | REV: 1 | SHEET: 5 of 6

THIS DWG IS PROPERTY OF CHM INDUSTRIES AND CONTAINS PROPRIETARY INFORMATION WHICH MAY NOT BE COPIED OR REPRODUCED WITHOUT PRIOR WRITTEN CONSENT FROM CHM INDUSTRIES.

SEE GENERAL NOTES AND DETAILS SHEET FOR SUPPLEMENTARY INFORMATION

TOTAL JOB MATERIAL REQUIREMENTS				
ITEM NO.	PART NUMBER	DESCRIPTION	QTY.	JOB QTY.
1	12899-01000-SHB	SHAFT, 12S, 33.98" X 32.06" X 5/16" X 8'-9"	1	1
2	B22011	4X4 ID TAG, A588	3	3
3	43029	NUT, HEX, 1/2-13, BLK, A563 DH	1	1
4	43026	NUT, HEAVY HEX, 1-8, A563 DH3	16	16
5	43010	NUT, HEAVY HEX, 1/2-13, HDG, A563 DH	3	3
6	12899-01000-CAS-SHS	SHAFT, 12S, 33.98" X 33.98" X 5/16" X 26'-0"	1	1
7	12899-01000-CAS-SHG	GND SLV HALF, 12S, 34.36" X 34.36" X 3/16" X 4'-0"	2	2
8	42120	BOLT, 1/2-13 X 1-3/4", HDG, HH, A307 A	1	1
9	44018	WASHER, FLAT, 1/2", HDG, F436 T1	1	1
10	12899-01000-PLT	SPLICE PLATE, Ø41" X 1"	1	1
11	12899-01000-EAR	DRIVING EAR, 1'-0" X 1'-4 9/16" X1"	2	2
12	12899-01000-SHM	SHAFT, 12S, 33.85" X 24.45" X 5/16" X 42'-9"	1	1
13	12899-01000-SHT	SHAFT, 12S, 25.90" X 16.00" X 1/4" X 45'-0"	1	1
14	12899-01000-TS	TOP STRAP, 15 3/8" X 2" X 3/16"	1	1
15	12899-01000-VS201	VANG, OBROUND, 2-SIDED, 25 1/8" X 3" X 5/8"	1	1
16	12899-01000-CP	COVER PLATE, Ø17 9/16" X 3/16"	1	1
17	12899-01000-VS01	VANG, OBROUND, 1-SIDED, 3" X 4 1/2" X 5/8"	2	2
18	12899-01000-DP01	DOUBLER PLATE, 4" X 5" X 5/8"	2	2

BY	DATE
DRAWN: MP	06/29/2026
CHK'D: EV	06/29/2026

CHM INDUSTRIES
700 E. McLEROY BLVD
SAGINAW, TEXAS 76179
682.286.0046 PH
682.286.0086 FX
CHMINDUSTRIES.COM

(SEE CHM IND., INC. PROCEDURE CHM-PR-1.7.3-F1 FOR STANDARD TOLERANCES)

QTY: 1 | GLM: (FT-K) 1468.1 | JOB NO. 12899 | PART NO. 12899-01000-PBOM | DWG NO. 12899-01000

CUST NAME: GREENVILLE UTILITIES STEEL STRUCTURES- NC
STR #: 52 TYPE/CLASS-HEIGHT: S17-90'-0"
DESCRIPTION: STRUCTURE, 33.98" X 16.00" X 88'-0"

SCALE: NTS DO NOT SCALE DRAWING | REV. 1 | SHEET: 6 of 6

THIS DWG IS PROPERTY OF CHM INDUSTRIES AND CONTAINS PROPRIETARY INFORMATION WHICH MAY NOT BE COPIED OR REPRODUCED WITHOUT PRIOR WRITTEN CONSENT FROM CHM INDUSTRIES.

FINISH:	BLACK WEIGHT	GALVANIZED WEIGHT
GALVANIZED	10657 LBS	11296 LBS
WEIGHTS ABOVE INCLUDE ALL BOM ITEMS		

SEE GENERAL NOTES AND DETAILS SHEET FOR SUPPLEMENTARY INFORMATION

ITEM #	PART #	DESCRIPTION	QTY.
1	12899-01100-BOT	BOTTOM SECTION, 33.98" X 32.06" X 5/16" X 8'-9"	1
2	12899-01100-MID	MIDDLE SECTION, 33.85" X 24.45" X 5/16" X 42'-9"	1
3	12899-01100-TOP	TOP SECTION, 25.90" X 16.00" X 1/4" X 45'-0"	1

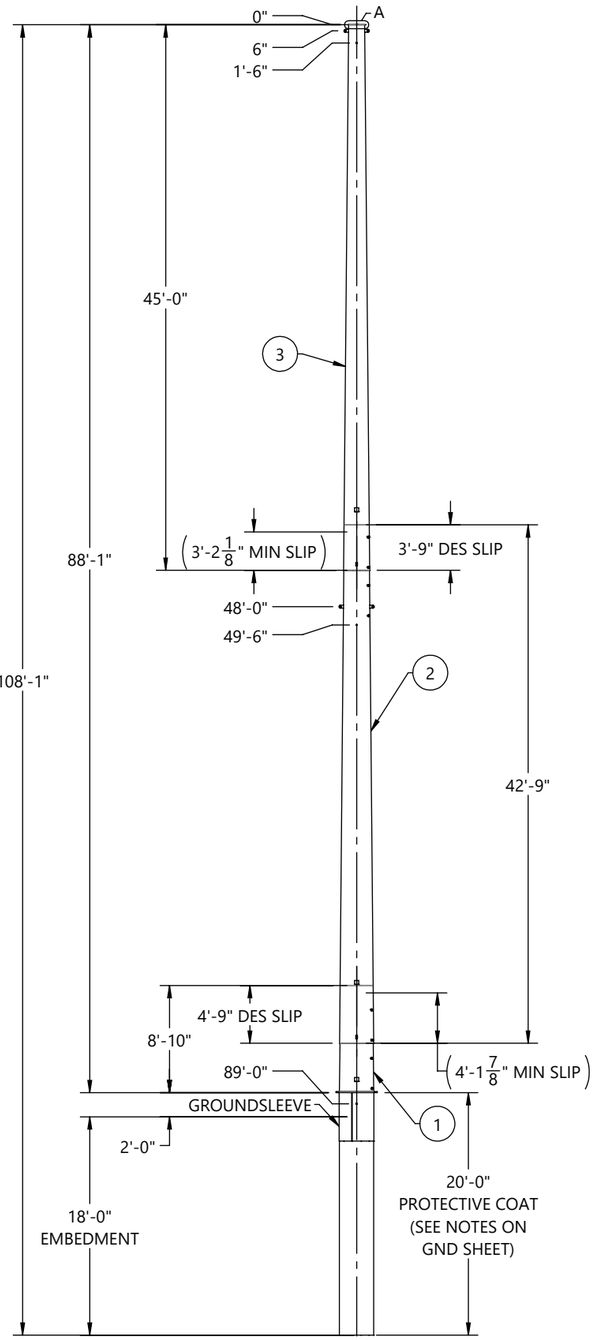

FRONT VIEW
(LOOKING @ 0° REF
ORIENTATION DETAIL)

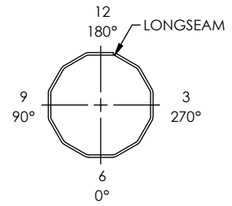

ORIENTATION DETAIL
TOP VIEW

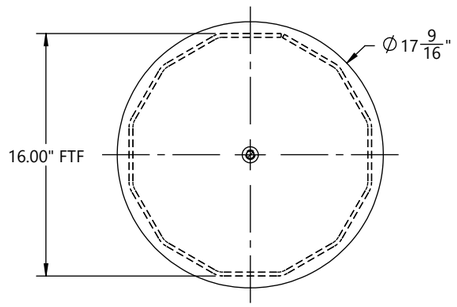

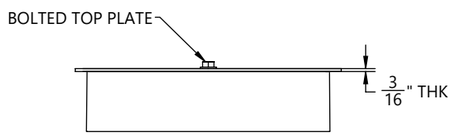

DETAIL A

HOLE CHART		
HOLE SIZE (INCH)	DISTANCE FROM TOP OF SHAFT	FLAT(S)
13/16"	8' - 0"	3, 9
13/16"	9' - 0"	3, 9
13/16"	16' - 0"	3, 9
13/16"	17' - 0"	3, 9
13/16"	24' - 0"	3, 9
13/16"	25' - 0"	3, 9
11/16"	33' - 0"	6, 12
11/16"	34' - 0"	6, 12
11/16"	37' - 0"	6, 12
11/16"	38' - 0"	6, 12
11/16"	41' - 0"	6, 12
11/16"	42' - 0"	6, 12

CUSTOMER PLEASE VERIFY
HOLES AT 41'-0" & 42'-0"
ELEVATIONS ARE FALLING
IN BETWEEN SLIP JOINT.
PLEASE SUGGEST.

BY	DATE
DRAWN: KB	06/29/2026
CHK'D: EV	06/29/2026

REV.	ECR #	DESCRIPTION	APPROVED BY	DATE
1		SUBMITTED FOR APPROVAL	EV	06/29/2026

REVISIONS

CHM INDUSTRIES
700 E. McLEROY BLVD
SAGINAW, TEXAS 76179
682.286.0046 PH
682.286.0086 FX
CHMINDUSTRIES.COM

(SEE CHM IND., INC. PROCEDURE CHM-PR-1.7.3-F1 FOR STANDARD TOLERANCES)

QTY: 1 | GLM: (FT-K) 1468.1 | JOB NO. 12899 | PART NO. 12899-01100-MN | DWG NO. 12899-01100

CUST NAME: GREENVILLE UTILITIES STEEL STRUCTURES- NC
STR #: 54 TYPE/CLASS-HEIGHT: S17-90'-0"
DESCRIPTION: STRUCTURE, 33.98" X 16.00" X 88'-0"

SCALE: NTS
DO NOT SCALE DRAWING
REV: 1 SHEET: 1 of 6

THIS DWG IS PROPERTY OF CHM INDUSTRIES AND CONTAINS PROPRIETARY INFORMATION WHICH MAY NOT BE COPIED OR REPRODUCED WITHOUT PRIOR WRITTEN CONSENT FROM CHM INDUSTRIES.

FINISH:	BLACK WEIGHT	GALVANIZED WEIGHT
GALVANIZED	3876 LBS	4109 LBS
WEIGHTS ABOVE INCLUDE ALL BOM ITEMS		

SEE GENERAL NOTES AND DETAILS SHEET FOR SUPPLEMENTARY INFORMATION

ITEM #	PART #	DESCRIPTION	MAT'L	QTY.
1	12899-01100-SHB	SHAFT, 12S, 33.98" X 32.06" X 5/16" X 8'-9"	A572 GR65	1
2	12899-01100-CAS-SHS	SHAFT, 12S, 33.98" X 33.98" X 5/16" X 20'-0"	A572 GR65	1
3	12899-01100-CAS-SHG	GND SLV HALF, 12S, 34.36" X 34.36" X 3/16" X 4'-0"	A572 GR65	2
4	12899-01100-PLT	SPLICE PLATE, Ø41" X 1"	A572 GR65	1
5	12899-01100-EAR	DRIVING EAR, 1'-0" X 1'-4 1/2" X1"	A572 GR65	2
6	B22011	4X4 ID TAG, A588	A588	1
7	43026	NUT, HEAVY HEX, 1-8, A563 DH3	A563-DH3	4
8	43010	NUT, HEAVY HEX, 1/2-13, HDG, A563 DH	A563-DH	1

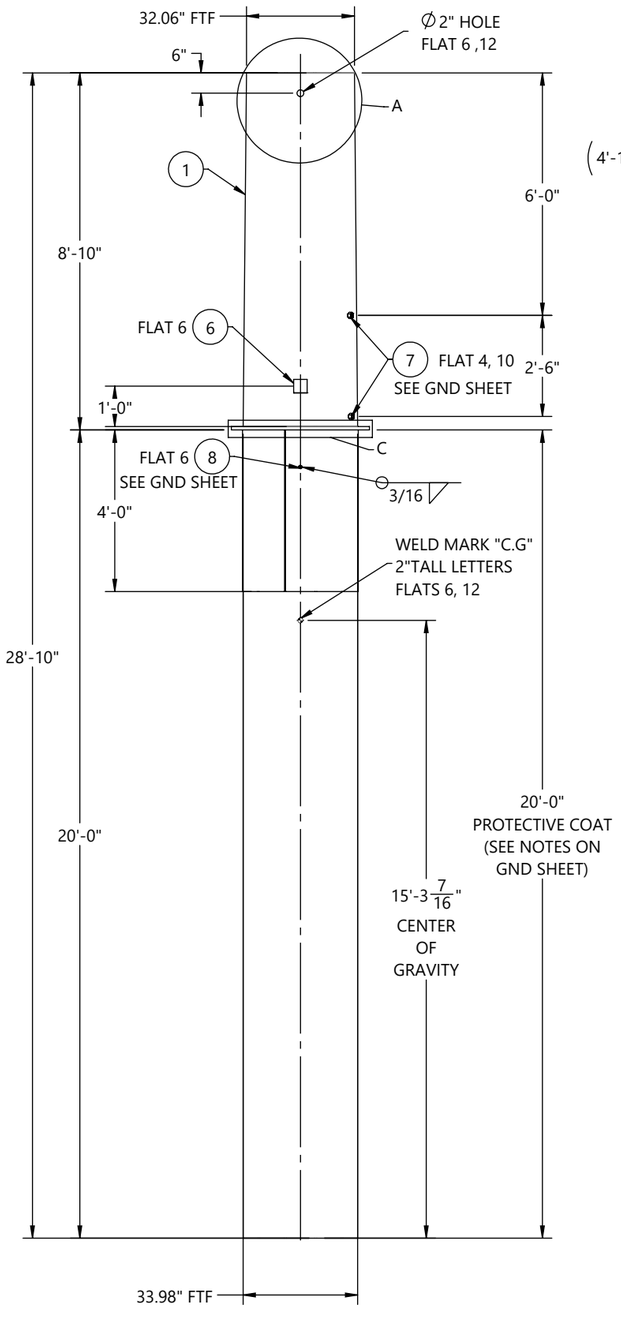

FRONT VIEW
(LOOKING @ 0° REF
ORIENTATION DETAIL)

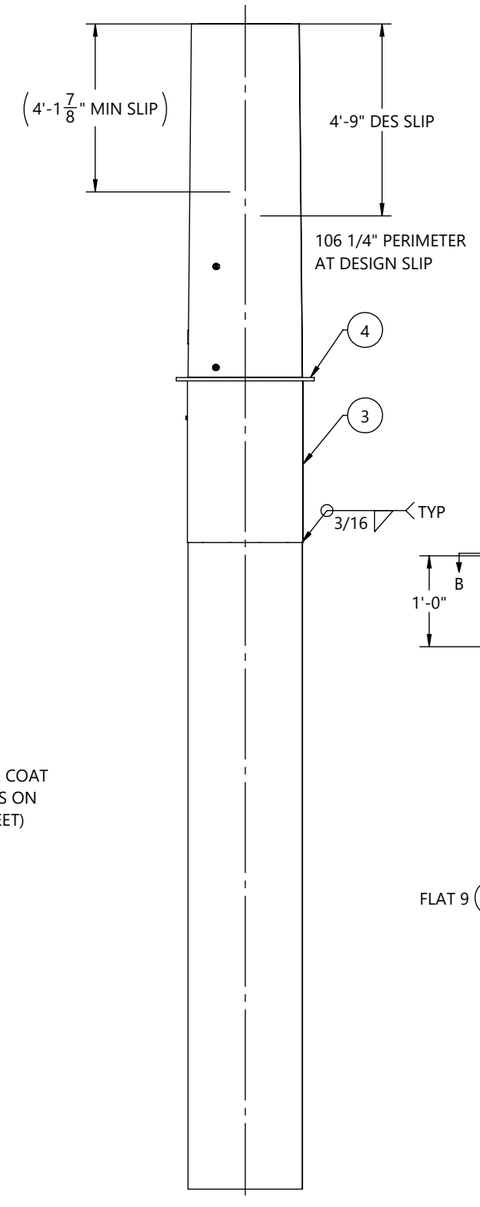

SIDE VIEW
(LOOKING @ 270° REF
ORIENTATION DETAIL)

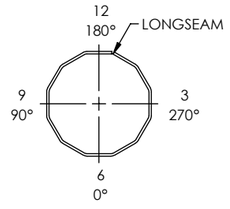

ORIENTATION DETAIL
TOP VIEW

GREENVILLE UTILITIES STEEL STRUCTURES- NC
STR#: 54, S17-90'-0"
GLM: 1468.1 FT-K
STR WT: 11296 LBS
SEC WT: 4109 LBS
DOM: [mm/YYYY]
CHM-12899-01100
12899-01100-BOT

ID TAG

TEXT TO BE 7/16" LETTERS
TAGS TO BE ORIENTED ON 0° FLAT
WEIGHT ON ID TAG IS FINISHED GALV. WEIGHT

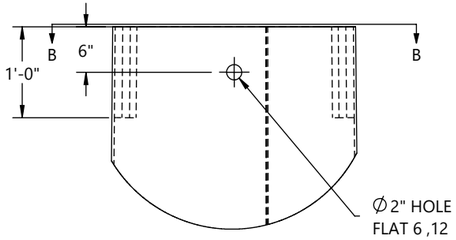

DETAIL A

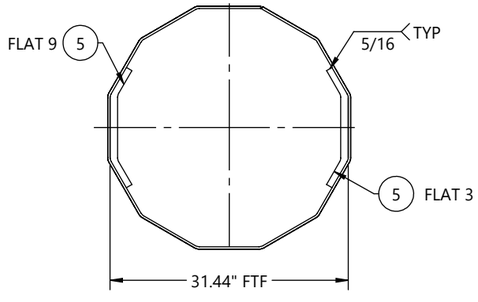

SECTION B-B

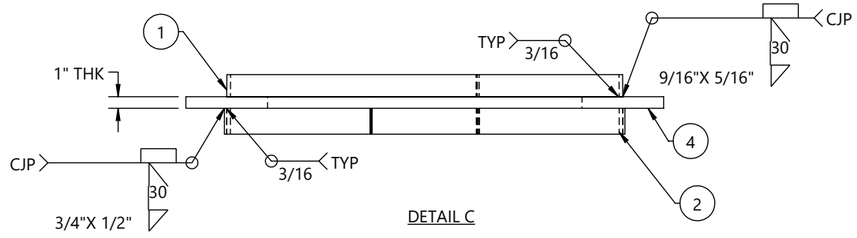

DETAIL C

REV.	ECR #	DESCRIPTION	APPROVED BY	DATE
1		SUBMITTED FOR APPROVAL	EV	06/29/2026

REVISIONS

BY		DATE
DRAWN:	KB	06/29/2026
CHK'D:	EV	06/29/2026

CHM INDUSTRIES
700 E. McLEROY BLVD
SAGINAW, TEXAS 76179
682.286.0046 PH
682.286.0086 FX
CHMINDUSTRIES.COM

(SEE CHM IND., INC. PROCEDURE CHM-PR-1.7.3-F1 FOR STANDARD TOLERANCES)

QTY: 1 | GLM: (FT-K) 1468.1 | JOB NO. 12899 | PART NO. 12899-01100-BOT | DWG NO. 12899-01100

CUST NAME: GREENVILLE UTILITIES STEEL STRUCTURES- NC
STR #: 54 TYPE/CLASS-HEIGHT: S17-90'-0"
DESCRIPTION: BOTTOM SECTION, 33.98" X 32.06" X 5/16" X 8'-9"

SCALE: NTS
DO NOT SCALE DRAWING
REV. 1 | SHEET: 2 of 6

THIS DWG IS PROPERTY OF CHM INDUSTRIES AND CONTAINS PROPRIETARY INFORMATION WHICH MAY NOT BE COPIED OR REPRODUCED WITHOUT PRIOR WRITTEN CONSENT FROM CHM INDUSTRIES.

FINISH:	BLACK WEIGHT	GALVANIZED WEIGHT
GALVANIZED	4217 LBS	4470 LBS
WEIGHTS ABOVE INCLUDE ALL BOM ITEMS		

SEE GENERAL NOTES AND DETAILS SHEET FOR SUPPLEMENTARY INFORMATION

ITEM #	PART #	DESCRIPTION	MAT'L	QTY.
1	12899-01100-SHM	SHAFT, 12S, 33.85" X 24.45" X 5/16" X 42'-9"	A572 GR65	1
2	12899-01100-VS209	VANG, OBROUND, 2-SIDED, 34 15/16" X 3" X 5/8"	A572 GR65	1
3	43010	NUT, HEAVY HEX, 1/2-13, HDG, A563 DH	A563-DH	1
4	43026	NUT, HEAVY HEX, 1-8, A563 DH3	A563-DH3	8
5	B22011	4X4 ID TAG, A588	A588	1

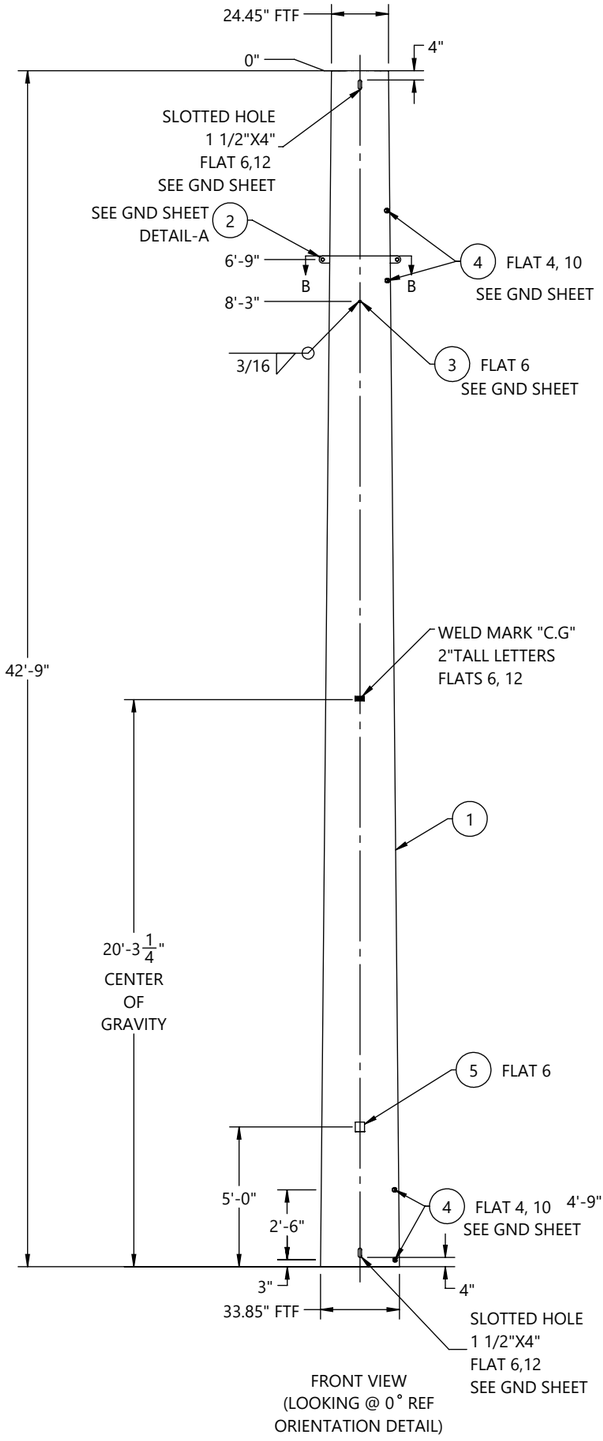

FRONT VIEW
(LOOKING @ 0° REF
ORIENTATION DETAIL)

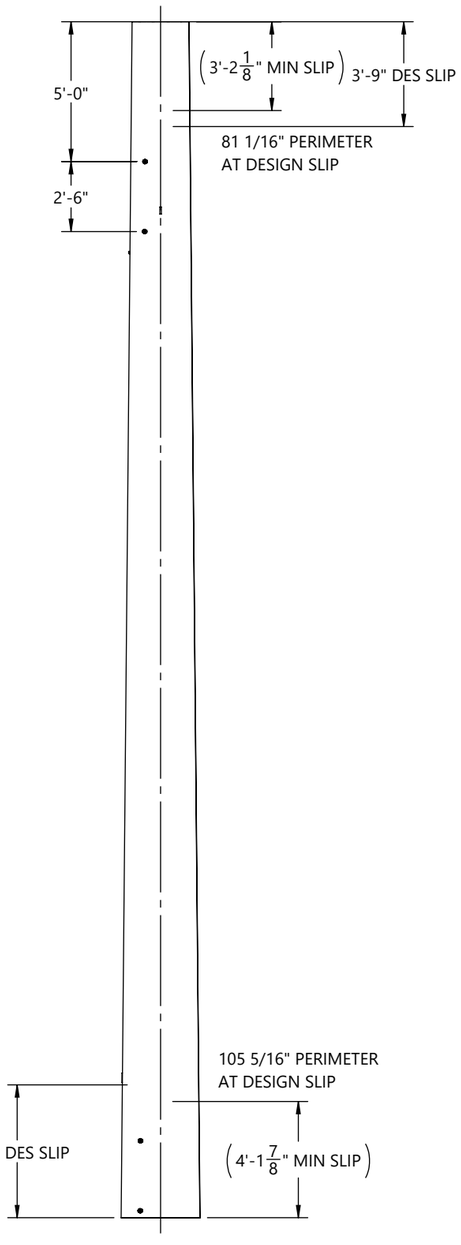

SIDE VIEW
(LOOKING @ 270° REF
ORIENTATION DETAIL)

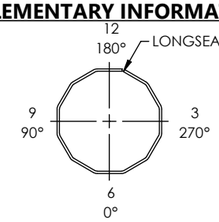

ORIENTATION DETAIL
TOP VIEW

GREENVILLE UTILITIES STEEL STRUCTURES- NC
STR#: 54, S17-90'-0"
SEC WT: 4470 LBS
DOM: [mm/YYYY]
CHM-12899-01100
12899-01100-MID

ID TAG

TEXT TO BE 7/16" LETTERS
TAGS TO BE ORIENTED ON 0° FLAT
WEIGHT ON ID TAG IS FINISHED GALV. WEIGHT

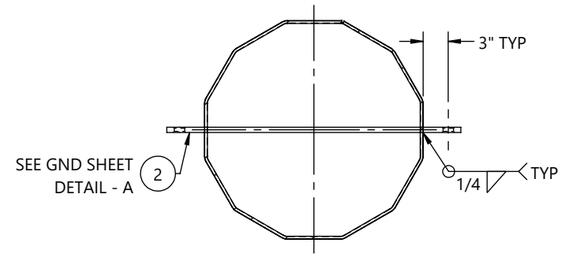

SECTION B-B

BY		DATE
DRAWN:	KB	06/29/2026
CHK'D:	EV	06/29/2026

REV.	ECR #	DESCRIPTION	APPROVED BY	DATE
1		SUBMITTED FOR APPROVAL	EV	06/29/2026

REVISIONS

CHM INDUSTRIES
700 E. McLEROY BLVD
SAGINAW, TEXAS 76179
682.286.0046 PH
682.286.0086 FX
CHMINDUSTRIES.COM

(SEE CHM IND., INC. PROCEDURE CHM-PR-1.7.3-F1 FOR STANDARD TOLERANCES)

QTY: 1	GLM: (FT-K) 1468.1	JOB NO. 12899	PART NO. 12899-01100-MID	DWG NO. 12899-01100

CUST NAME: GREENVILLE UTILITIES STEEL STRUCTURES- NC
STR #: 54 TYPE/CLASS-HEIGHT: S17-90'-0"
DESCRIPTION: MIDDLE SECTION, 33.85" X 24.45" X 5/16" X 42'-9"

SCALE: NTS
DO NOT SCALE DRAWING
REV. 1
SHEET: 3 of 6

THIS DWG IS PROPERTY OF CHM INDUSTRIES AND CONTAINS PROPRIETARY INFORMATION WHICH MAY NOT BE COPIED OR REPRODUCED WITHOUT PRIOR WRITTEN CONSENT FROM CHM INDUSTRIES.

FINISH:	BLACK WEIGHT	GALVANIZED WEIGHT
GALVANIZED	2563 LBS	2717 LBS
WEIGHTS ABOVE INCLUDE ALL BOM ITEMS		

SEE GENERAL NOTES AND DETAILS SHEET FOR SUPPLEMENTARY INFORMATION

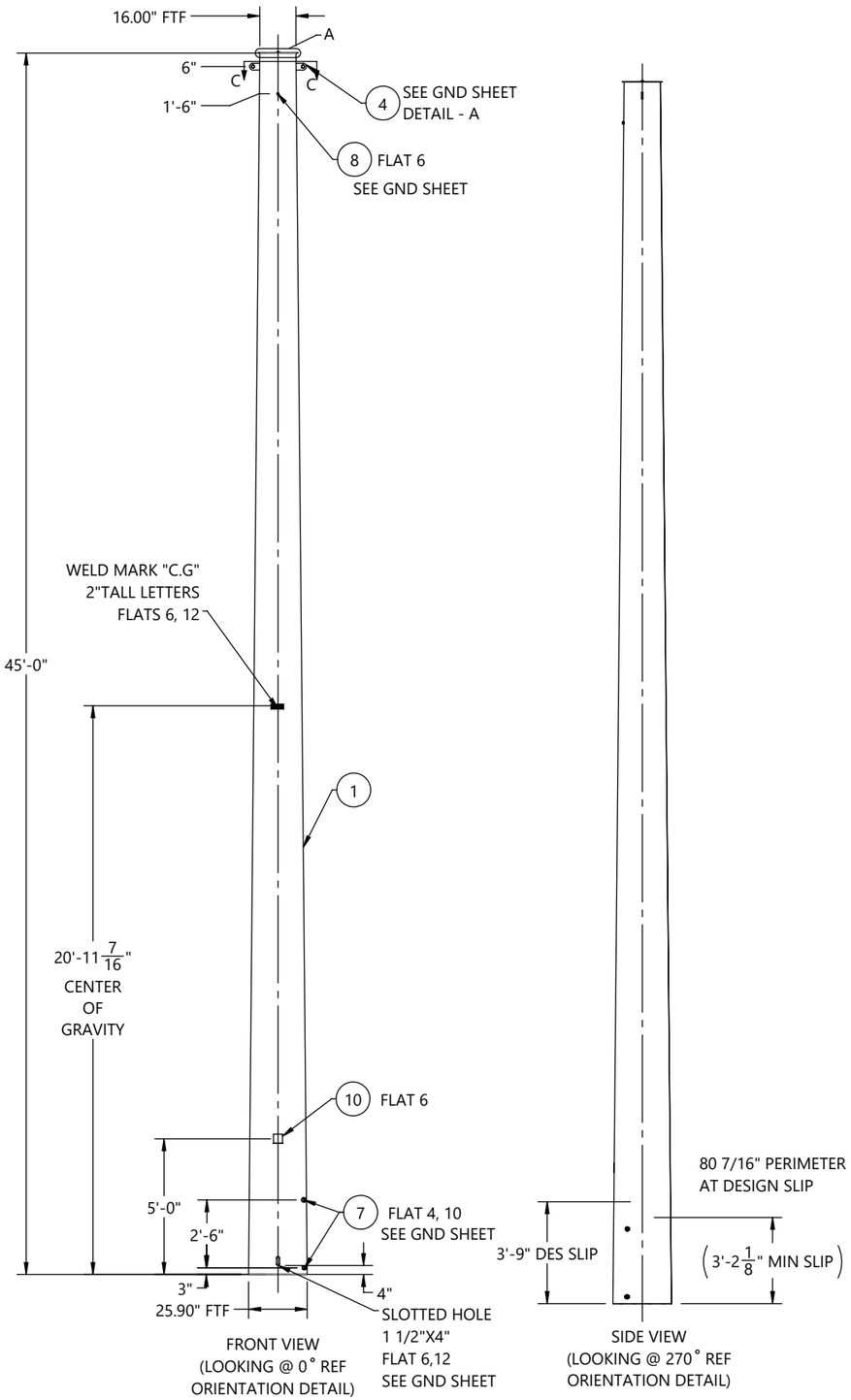

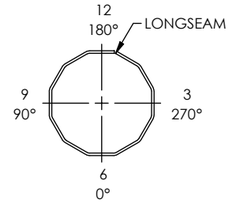

ORIENTATION DETAIL
TOP VIEW

ITEM #	PART #	DESCRIPTION	MAT'L	QTY.
1	12899-01100-SHT	SHAFT, 12S, 25.90" X 16.00" X 1/4" X 45'-0"	A572 GR65	1
2	12899-01100-TS	TOP STRAP, 15 3/8" X 2" X 3/16"	A572 GR65	1
3	12899-01100-CP	COVER PLATE, Ø17 9/16" X 3/16"	A572 GR65	1
4	12899-01100-VS201	VANG, OBROUND, 2-SIDED, 25 1/8" X 3" X 5/8"	A572 GR65	1
5	44018	WASHER, FLAT, 1/2", HDG, F436 T1	F436-T1	1
6	43029	NUT, HEX, 1/2-13, BLK, A563 DH	A563-DH	1
7	43026	NUT, HEAVY HEX, 1-8, A563 DH3	A563-DH3	4
8	43010	NUT, HEAVY HEX, 1/2-13, HDG, A563 DH	A563-DH	1
9	42120	BOLT, 1/2-13 X 1-3/4", HDG, HH, A307 A	A307-A	1
10	B22011	4X4 ID TAG, A588	A588	1

GREENVILLE UTILITIES STEEL STRUCTURES- NC
STR#: 54, S17-90'-0"
SEC WT: 2717 LBS
DOM: [mm/YYYY]
CHM-12899-01100
12899-01100-TOP

ID TAG

TEXT TO BE 7/16" LETTERS
TAGS TO BE ORIENTED ON 0° FLAT
WEIGHT ON ID TAG IS FINISHED GALV. WEIGHT

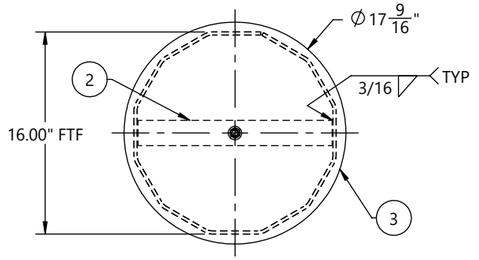

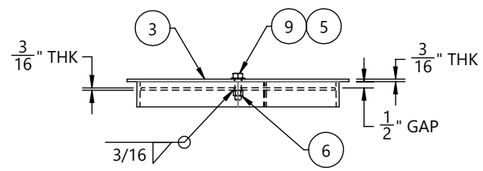

DETAIL A

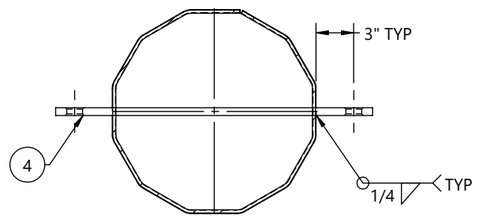

SECTION C-C

HOLE CHART		
HOLE SIZE (INCH)	DISTANCE FROM TOP OF SHAFT	FLAT(S)
13/16"	8' - 0"	3, 9
13/16"	9' - 0"	3, 9
13/16"	16' - 0"	3, 9
13/16"	17' - 0"	3, 9
13/16"	24' - 0"	3, 9
13/16"	25' - 0"	3, 9
11/16"	33' - 0"	6, 12
11/16"	34' - 0"	6, 12
11/16"	37' - 0"	6, 12
11/16"	38' - 0"	6, 12
11/16"	41' - 0"	6, 12
11/16"	42' - 0"	6, 12

CUSTOMER PLEASE VERIFY HOLES AT 41'-0" & 42'-0" ELEVATIONS ARE FALLING IN BETWEEN SLIP JOINT. PLEASE SUGGEST.

BY		DATE
DRAWN:	KB	06/29/2026
CHK'D:	EV	06/29/2026

REV.	ECR #	DESCRIPTION	APPROVED BY	DATE
1		SUBMITTED FOR APPROVAL	EV	06/29/2026

REVISIONS

CHM INDUSTRIES
700 E. McLEROY BLVD
SAGINAW, TEXAS 76179
682.286.0046 PH
682.286.0086 FX
CHMINDUSTRIES.COM

(SEE CHM IND., INC. PROCEDURE CHM-PR-1.7.3-F1 FOR STANDARD TOLERANCES)

QTY: 1	GLM: (FT-K) 1468.1	JOB NO. 12899	PART NO. 12899-01100-TOP	DWG NO. 12899-01100

CUST NAME: GREENVILLE UTILITIES STEEL STRUCTURES- NC
STR #: 54 TYPE/CLASS-HEIGHT: S17-90'-0"
DESCRIPTION: TOP SECTION, 25.90" X 16.00" X 1/4" X 45'-0"

SCALE: NTS
DO NOT SCALE DRAWING
REV.: 1
SHEET: 4 of 6

THIS DWG IS PROPERTY OF CHM INDUSTRIES AND CONTAINS PROPRIETARY INFORMATION WHICH MAY NOT BE COPIED OR REPRODUCED WITHOUT PRIOR WRITTEN CONSENT FROM CHM INDUSTRIES.

SEE GENERAL NOTES AND DETAILS SHEET FOR SUPPLEMENTARY INFORMATION

INDIVIDUAL STRUCTURE BILL OF MATERIALS			
ITEM NO.	PART NUMBER	DESCRIPTION	QTY.
1	12899-01100-BOT	BOTTOM SECTION, 33.98" X 32.06" X 5/16" X 8'-9"	1
1.1	12899-01100-SHB	SHAFT, 12S, 33.98" X 32.06" X 5/16" X 8'-9"	1
1.2	B22011	4X4 ID TAG, A588	1
1.3	43026	NUT, HEAVY HEX, 1-8, A563 DH3	4
1.4	ASSY-01100-CAS-MN	STRUCTURE, 33.98" X 33.98" X 20'-0"	1
1.4.1	ASSY-01100-CAS-SNG	SINGLE SECTION, 33.98" X 33.98" X 5/16" X 20'-0"	1
1.4.1.1	12899-01100-CAS-SHS	SHAFT, 12S, 33.98" X 33.98" X 5/16" X 20'-0"	1
1.4.1.2	12899-01100-CAS-SHG	GND SLV HALF, 12S, 34.36" X 34.36" X 3/16" X 4'-0"	2
1.4.1.3	12899-01100-PLT	SPLICE PLATE, Ø41" X 1"	1
1.5	12899-01100-EAR	DRIVING EAR, 1'-0" X 1'-4 1/2" X1"	2
1.6	43010	NUT, HEAVY HEX, 1/2-13, HDG, A563 DH	1
2	12899-01100-MID	MIDDLE SECTION, 33.85" X 24.45" X 5/16" X 42'-9"	1
2.1	12899-01100-SHM	SHAFT, 12S, 33.85" X 24.45" X 5/16" X 42'-9"	1
2.2	B22011	4X4 ID TAG, A588	1
2.3	43026	NUT, HEAVY HEX, 1-8, A563 DH3	8
2.4	43010	NUT, HEAVY HEX, 1/2-13, HDG, A563 DH	1
2.5	12899-01100-VS209	VANG, OBROUND, 2-SIDED, 34 15/16" X 3" X 5/8"	1
3	12899-01100-TOP	TOP SECTION, 25.90" X 16.00" X 1/4" X 45'-0"	1
3.1	12899-01100-SHT	SHAFT, 12S, 25.90" X 16.00" X 1/4" X 45'-0"	1
3.2	12899-01100-TS	TOP STRAP, 15 3/8" X 2" X 3/16"	1
3.3	12899-01100-VS201	VANG, OBROUND, 2-SIDED, 25 1/8" X 3" X 5/8"	1
3.4	B22011	4X4 ID TAG, A588	1
3.5	43026	NUT, HEAVY HEX, 1-8, A563 DH3	4
3.6	43010	NUT, HEAVY HEX, 1/2-13, HDG, A563 DH	1
3.7	43029	NUT, HEX, 1/2-13, BLK, A563 DH	1
3.8	12899-01100-CP	COVER PLATE, Ø17 9/16" X 3/16"	1
3.9	44018	WASHER, FLAT, 1/2", HDG, F436 T1	1
3.10	42120	BOLT, 1/2-13 X 1-3/4", HDG, HH, A307 A	1

BY		DATE
DRAWN:	KB	06/29/2026
CHK'D:	EV	06/29/2026

CHM INDUSTRIES
700 E. McLEROY BLVD
SAGINAW, TEXAS 76179
682.286.0046 PH
682.286.0086 FX
CHMINDUSTRIES.COM

(SEE CHM IND., INC. PROCEDURE CHM-PR-1.7.3-F1 FOR STANDARD TOLERANCES)

QTY: 1 | GLM: (FT-K) 1468.1 | JOB NO. 12899 | PART NO. 12899-01100-SBOM | DWG NO. 12899-01100

CUST NAME: GREENVILLE UTILITIES STEEL STRUCTURES- NC

STR #: 54 TYPE/CLASS-HEIGHT: S17-90'-0"

DESCRIPTION: STRUCTURE, 33.98" X 16.00" X 88'-0"

SCALE: NTS DO NOT SCALE DRAWING

REV: 1 SHEET: 5 of 6

THIS DWG IS PROPERTY OF CHM INDUSTRIES AND CONTAINS PROPRIETARY INFORMATION WHICH MAY NOT BE COPIED OR REPRODUCED WITHOUT PRIOR WRITTEN CONSENT FROM CHM INDUSTRIES.

SEE GENERAL NOTES AND DETAILS SHEET FOR SUPPLEMENTARY INFORMATION

TOTAL JOB MATERIAL REQUIREMENTS				
ITEM NO.	PART NUMBER	DESCRIPTION	QTY.	JOB QTY.
1	42120	BOLT, 1/2-13 X 1-3/4", HDG, HH, A307 A	1	1
2	43026	NUT, HEAVY HEX, 1-8, A563 DH3	16	16
3	43029	NUT, HEX, 1/2-13, BLK, A563 DH	1	1
4	44018	WASHER, FLAT, 1/2", HDG, F436 T1	1	1
5	B22011	4X4 ID TAG, A588	3	3
6	12899-01100-VS209	VANG, OBROUND, 2-SIDED, 34 15/16" X 3" X 5/8"	1	1
7	12899-01100-CP	COVER PLATE, Ø17 9/16" X 3/16"	1	1
8	12899-01100-SHB	SHAFT, 12S, 33.98" X 32.06" X 5/16" X 8'-9"	1	1
9	12899-01100-SHM	SHAFT, 12S, 33.85" X 24.45" X 5/16" X 42'-9"	1	1
10	12899-01100-SHT	SHAFT, 12S, 25.90" X 16.00" X 1/4" X 45'-0"	1	1
11	12899-01100-TS	TOP STRAP, 15 3/8" X 2" X 3/16"	1	1
12	43010	NUT, HEAVY HEX, 1/2-13, HDG, A563 DH	3	3
13	12899-01100-VS201	VANG, OBROUND, 2-SIDED, 25 1/8" X 3" X 5/8"	1	1
14	12899-01100-PLT	SPLICE PLATE, Ø41" X 1"	1	1
15	12899-01100-CAS-SHS	SHAFT, 12S, 33.98" X 33.98" X 5/16" X 20'-0"	1	1
16	12899-01100-CAS-SHG	GND SLV HALF, 12S, 34.36" X 34.36" X 3/16" X 4'-0"	2	2
17	12899-01100-EAR	DRIVING EAR, 1'-0" X 1'-4 1/2" X1"	2	2

BY		DATE
DRAWN:	KB	06/29/2026
CHK'D:	EV	06/29/2026

CHM INDUSTRIES

700 E. McLEROY BLVD
SAGINAW, TEXAS 76179
682.286.0046 PH
682.286.0086 FX
CHMINDUSTRIES.COM

(SEE CHM IND., INC. PROCEDURE CHM-PR-1.7.3-F1 FOR STANDARD TOLERANCES)

QTY: 1 | GLM: (FT-K) 1468.1 | JOB NO. 12899 | PART NO. 12899-01100-PBOM | DWG NO. 12899-01100

CUST NAME: GREENVILLE UTILITIES STEEL STRUCTURES- NC

STR #: 54 TYPE/CLASS-HEIGHT: S17-90'-0"

DESCRIPTION: STRUCTURE, 33.98" X 16.00" X 88'-0"

SCALE: NTS DO NOT SCALE DRAWING

REV: 1 SHEET: 6 of 6

THIS DWG IS PROPERTY OF CHM INDUSTRIES AND CONTAINS PROPRIETARY INFORMATION WHICH MAY NOT BE COPIED OR REPRODUCED WITHOUT PRIOR WRITTEN CONSENT FROM CHM INDUSTRIES.

FINISH:	BLACK WEIGHT	GALVANIZED WEIGHT
GALVANIZED	11382 LBS	12065 LBS
WEIGHTS ABOVE INCLUDE ALL BOM ITEMS		

SEE GENERAL NOTES AND DETAILS SHEET FOR SUPPLEMENTARY INFORMATION

ITEM #	PART #	DESCRIPTION	QTY.
1	12899-01200-BOT	BOTTOM SECTION, 35.42" X 33.40" X 5/16" X 9'-0"	1
2	12899-01200-MID	MIDDLE SECTION, 35.27" X 25.60" X 5/16" X 43'-0""	1
3	12899-01200-TOP	TOP SECTION, 27.12" X 17.00" X 1/4" X 45'-0"	1

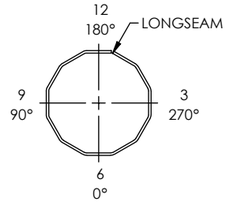

ORIENTATION DETAIL
TOP VIEW

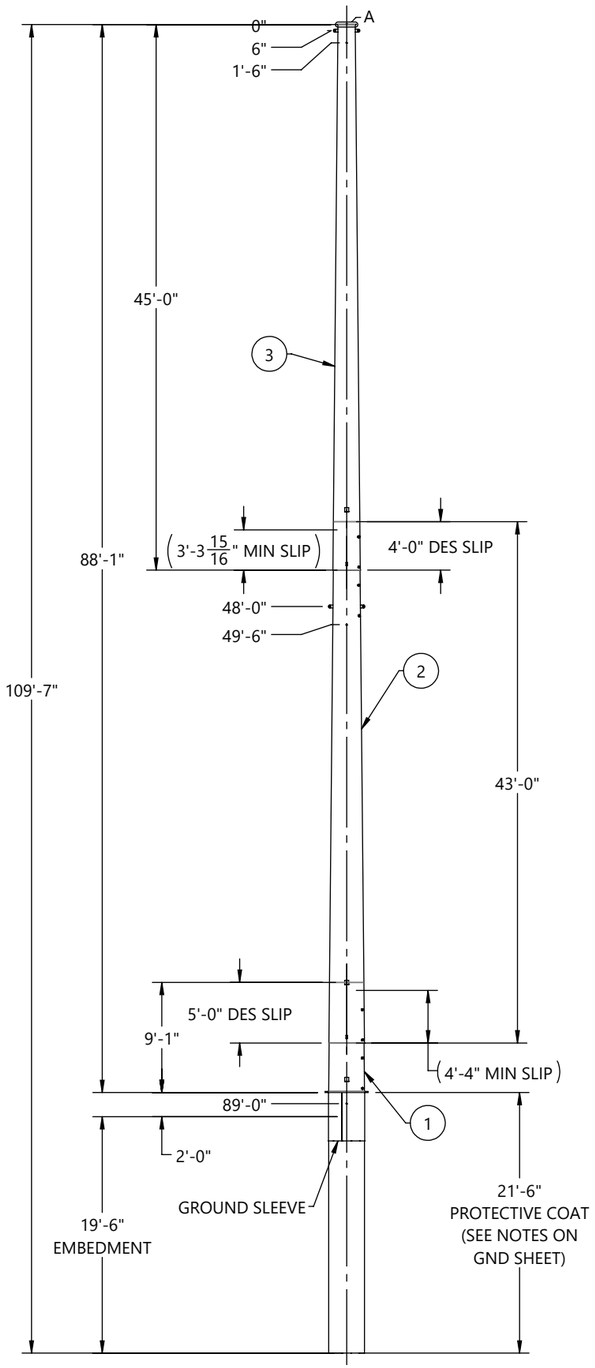

FRONT VIEW
(LOOKING @ 0° REF
ORIENTATION DETAIL)

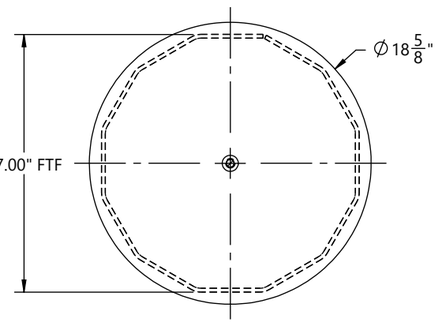

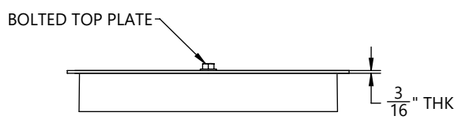

DETAIL A

HOLE CHART		
HOLE SIZE (INCH)	DISTANCE FROM TOP OF SHAFT	FLAT(S)
13/16"	8' - 0"	3, 9
13/16"	9' - 0"	3, 9
13/16"	16' - 0"	3, 9
13/16"	17' - 0"	3, 9
13/16"	24' - 0"	3, 9
13/16"	25' - 0"	3, 9
11/16"	33' - 0"	6, 12
11/16"	34' - 0"	6, 12
11/16"	37' - 0"	6, 12
11/16"	38' - 0"	6, 12
11/16"	41' - 0"	6, 12
11/16"	42' - 0"	6, 12

CUSTOMER PLEASE VERIFY
HOLES AT 41'-0" & 42'-0"
ELEVATIONS ARE FALLING
IN BETWEEN SLIP JOINT.
PLEASE SUGGEST.

BY		DATE
DRAWN:	KB	06/29/2026
CHK'D:	EV	06/29/2026

REV.	ECR #	DESCRIPTION	APPROVED BY	DATE
1		SUBMITTED FOR APPROVAL	EV	06/29/2026

REVISIONS

CHM INDUSTRIES
700 E. McLEROY BLVD
SAGINAW, TEXAS 76179
682.286.0046 PH
682.286.0086 FX
CHMINDUSTRIES.COM

(SEE CHM IND., INC. PROCEDURE CHM-PR-1.7.3-F1 FOR STANDARD TOLERANCES)

QTY: 1 | GLM: (FT-K) 1554.4 | JOB NO. 12899 | PART NO. 12899-01200-MN | DWG NO. 12899-01200

CUST NAME: GREENVILLE UTILITIES STEEL STRUCTURES- NC
STR #: 55 TYPE/CLASS-HEIGHT: S18-88'-0"
DESCRIPTION: STRUCTURE, 35.42" X 17.00" X 88'-0"

SCALE: NTS
DO NOT SCALE DRAWING
REV.: 1 | SHEET: 1 of 6

THIS DWG IS PROPERTY OF CHM INDUSTRIES AND CONTAINS PROPRIETARY INFORMATION WHICH MAY NOT BE COPIED OR REPRODUCED WITHOUT PRIOR WRITTEN CONSENT FROM CHM INDUSTRIES.

FINISH:	BLACK WEIGHT	GALVANIZED WEIGHT
GALVANIZED	4248 LBS	4503 LBS
WEIGHTS ABOVE INCLUDE ALL BOM ITEMS		

SEE GENERAL NOTES AND DETAILS SHEET FOR SUPPLEMENTARY INFORMATION

ITEM #	PART #	DESCRIPTION	MAT'L	QTY.
1	12899-01200-SHB	SHAFT, 12S, 35.42" X 33.40" X 5/16" X 9'-0"	A572 GR65	1
2	1899-01200-CAS-SHS	SHAFT, 12S, 35.42" X 35.42" X 5/16" X 21'-6"	A572 GR65	1
3	12899-01200-CAS-SHG	GND SLV HALF, 12S, 35.80" X 35.80" X 3/16" X 4'-0"	A572 GR65	2
4	12899-01200-PLT	SPLICE PLATE, Ø42 7/16" X 1"	A572 GR65	1
5	12899-01200-EAR	DRIVING EAR 1'-0" X 1'-4 15/16" X1"	A572 GR65	2
6	B22011	4X4 ID TAG, A588	A588	1
7	43026	NUT, HEAVY HEX, 1-8, A563 DH3	A563-DH3	4
8	43010	NUT, HEAVY HEX, 1/2-13, HDG, A563 DH	A563-DH	1

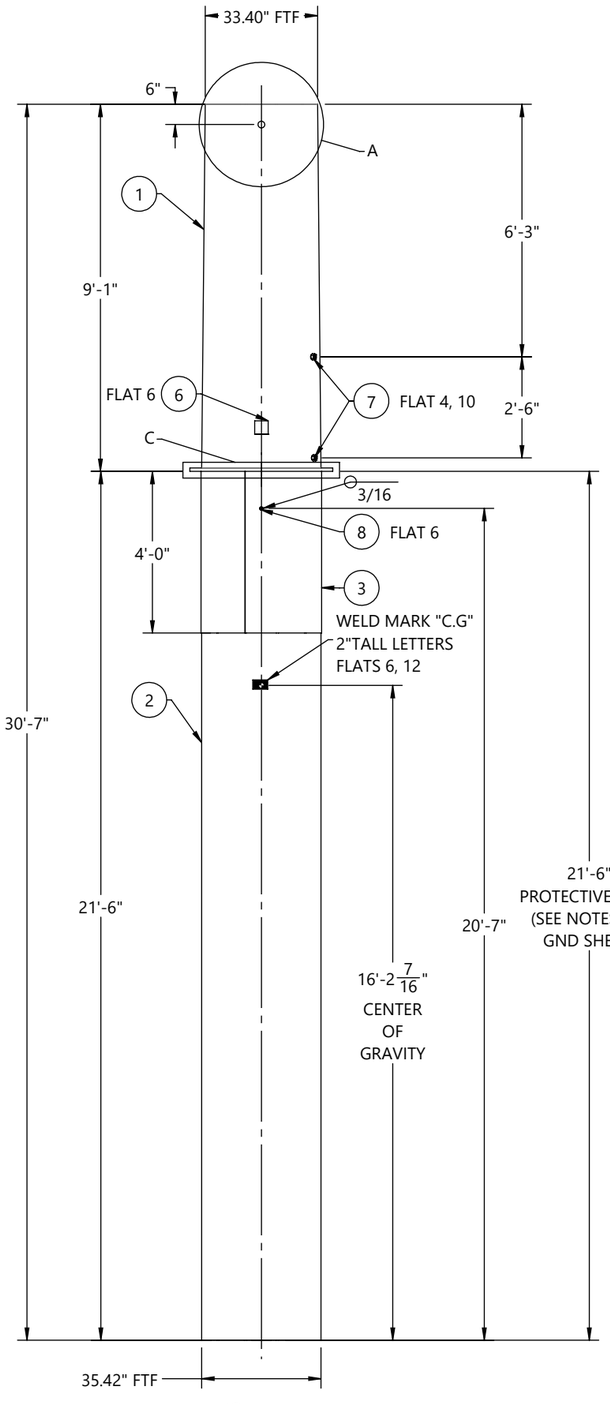

FRONT VIEW
(LOOKING @ 0° REF
ORIENTATION DETAIL)

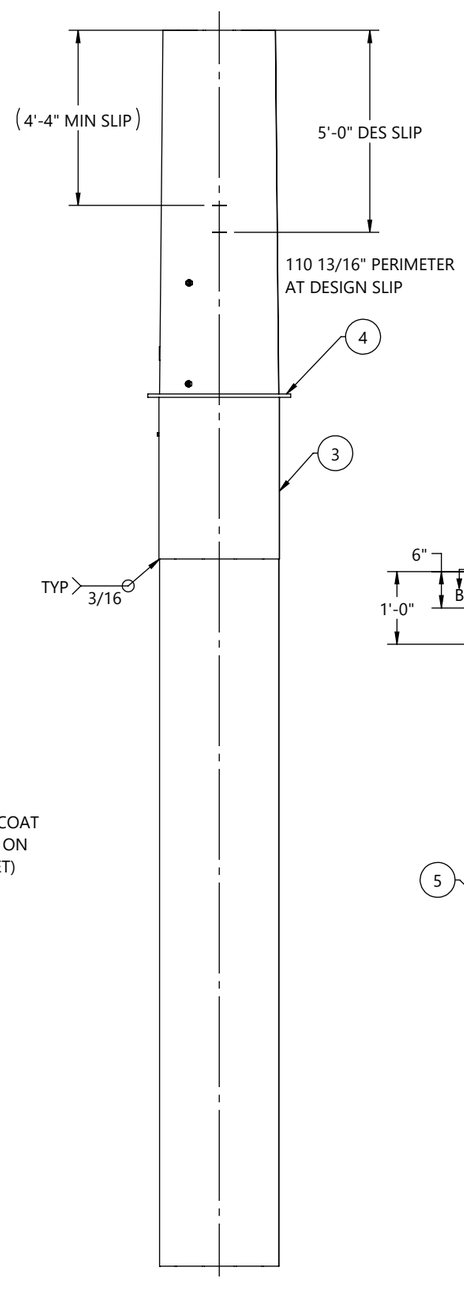

SIDE VIEW
(LOOKING @ 270° REF
ORIENTATION DETAIL)

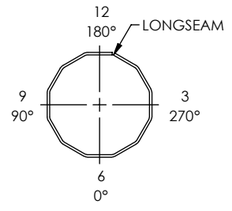

ORIENTATION DETAIL
TOP VIEW

GREENVILLE UTILITIES STEEL STRUCTURES- NC
STR#: 55, S18-88'-0"
GLM: 1554.4 FT-K
STR WT: 12065 LBS
SEC WT: 4503 LBS
DOM: [mm/YYYY]
CHM-12899-01200
12899-01200-BOT

ID TAG

TEXT TO BE 7/16" LETTERS
TAGS TO BE ORIENTED ON 0° FLAT
WEIGHT ON ID TAG IS FINISHED GALV. WEIGHT

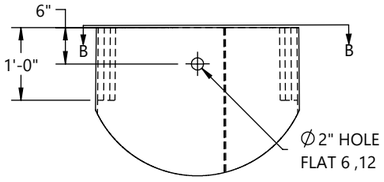

DETAIL A

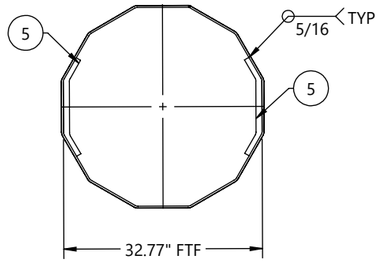

SECTION B-B

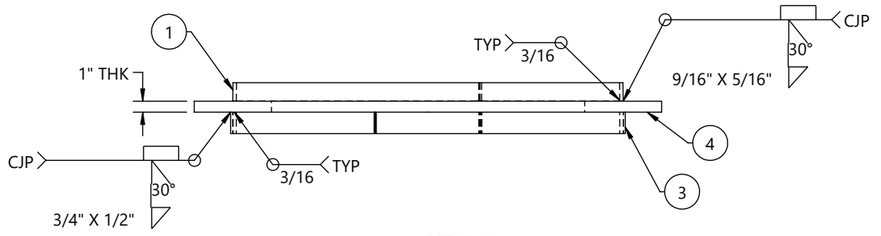

DETAIL C

REV.	ECR #	DESCRIPTION	APPROVED BY	DATE
1		SUBMITTED FOR APPROVAL	EV	06/29/2026

REVISIONS

BY		DATE
DRAWN:	KB	06/29/2026
CHK'D:	EV	06/29/2026

CHM INDUSTRIES
700 E. McLEROY BLVD
SAGINAW, TEXAS 76179
682.286.0046 PH
682.286.0086 FX
CHMINDUSTRIES.COM

(SEE CHM IND., INC. PROCEDURE CHM-PR-1.7.3-F1 FOR STANDARD TOLERANCES)

QTY: 1 | GLM: (FT-K) 1554.4 | JOB NO. 12899 | PART NO. 12899-01200-BOT | DWG NO. 12899-01200

CUST NAME: GREENVILLE UTILITIES STEEL STRUCTURES- NC
STR #: 55 TYPE/CLASS-HEIGHT: S18-88'-0"
DESCRIPTION: BOTTOM SECTION, 35.42" X 33.40" X 5/16" X 9'-0"

SCALE: NTS
DO NOT SCALE DRAWING
REV. 1 | SHEET: 2 of 6

THIS DWG IS PROPERTY OF CHM INDUSTRIES AND CONTAINS PROPRIETARY INFORMATION WHICH MAY NOT BE COPIED OR REPRODUCED WITHOUT PRIOR WRITTEN CONSENT FROM CHM INDUSTRIES.

FINISH:	BLACK WEIGHT	GALVANIZED WEIGHT
GALVANIZED	4432 LBS	4698 LBS
WEIGHTS ABOVE INCLUDE ALL BOM ITEMS		

SEE GENERAL NOTES AND DETAILS SHEET FOR SUPPLEMENTARY INFORMATION

ITEM #	PART #	DESCRIPTION	MAT'L	QTY.
1	12899-01200-SHM	SHAFT, 12S, 35.27" X 25.60" X 5/16" X 43'-0"	A572 GR65	1
2	12899-01200-VS209	VANG, OBROUND, 2-SIDED, 36 3/16" X 3" X 5/8"	A572 GR65	1
3	43010	NUT, HEAVY HEX, 1/2-13, HDG, A563 DH	A563-DH	1
4	43026	NUT, HEAVY HEX, 1-8, A563 DH3	A563-DH3	8
5	B22011	4X4 ID TAG, A588	A588	1

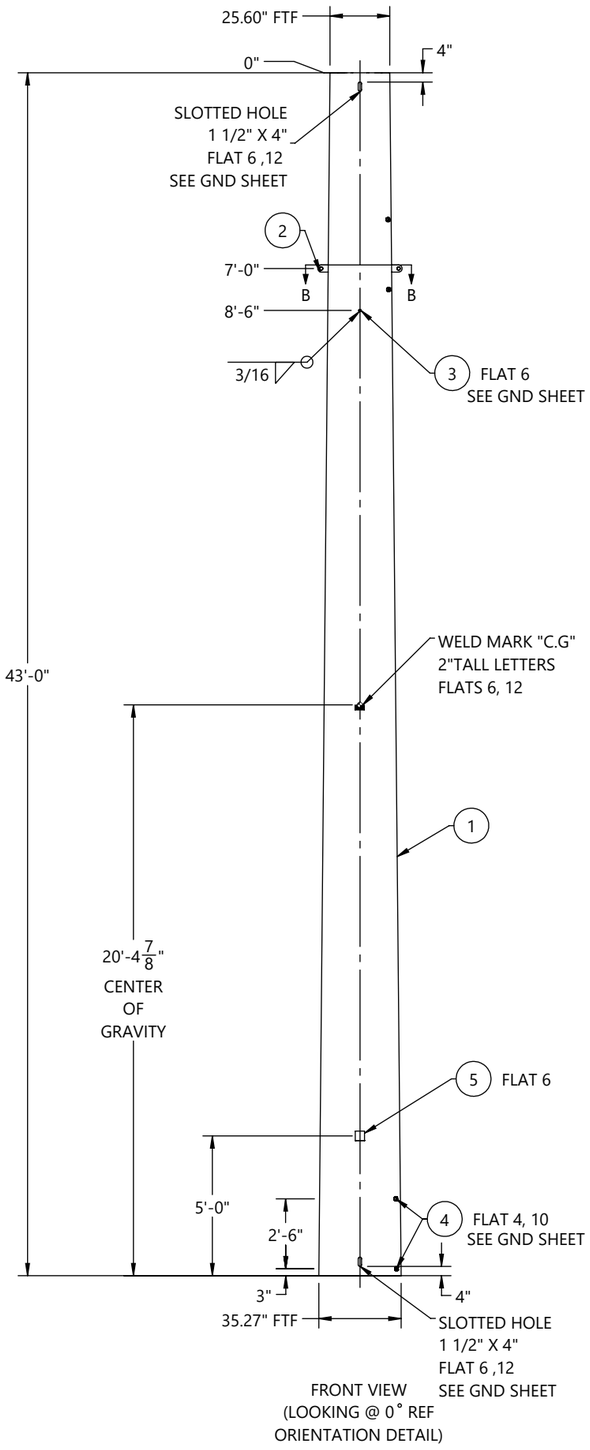

FRONT VIEW
(LOOKING @ 0° REF
ORIENTATION DETAIL)

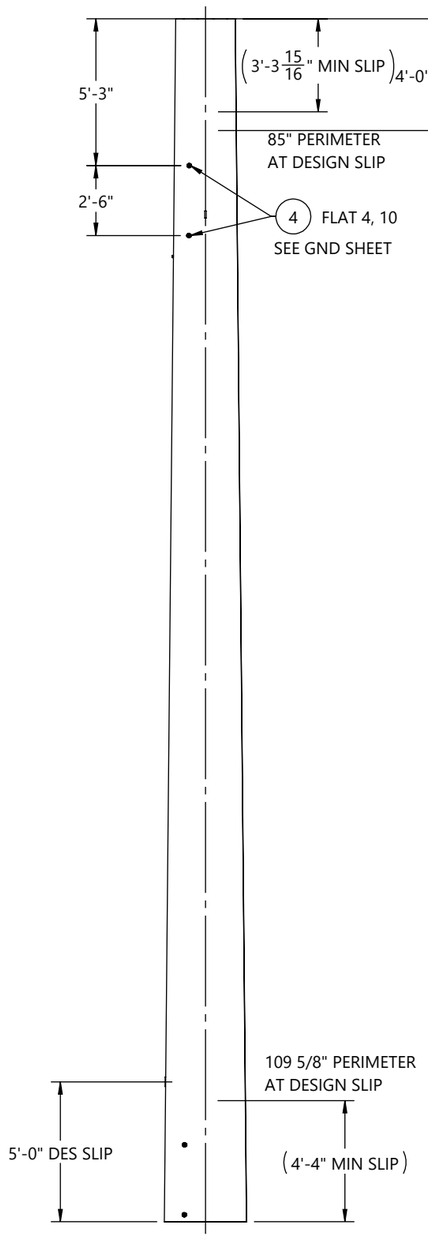

SIDE VIEW
(LOOKING @ 270° REF
ORIENTATION DETAIL)

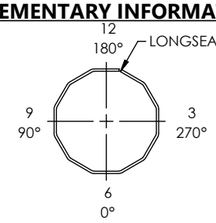

ORIENTATION DETAIL
TOP VIEW

GREENVILLE UTILITIES STEEL STRUCTURES- NC
STR#: 55, S18-88'-0"
SEC WT: 4698 LBS
DOM: [mm/YYYY]
CHM-12899-01200
12899-01200-MID

ID TAG

TEXT TO BE 7/16" LETTERS
TAGS TO BE ORIENTED ON 0° FLAT
WEIGHT ON ID TAG IS FINISHED GALV. WEIGHT

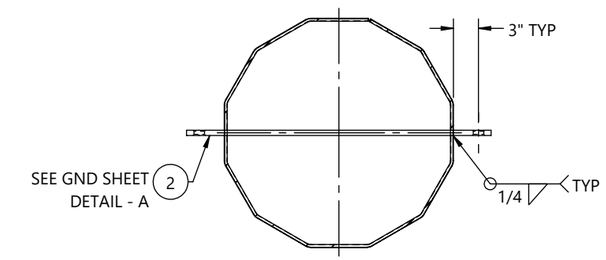

SECTION B-B

BY		DATE
DRAWN:	KB	06/29/2026
CHK'D:	EV	06/29/2026

REV.	ECR #	DESCRIPTION	APPROVED BY	DATE
1		SUBMITTED FOR APPROVAL	EV	06/29/2026

REVISIONS

CHM INDUSTRIES
700 E. McLEROY BLVD
SAGINAW, TEXAS 76179
682.286.0046 PH
682.286.0086 FX
CHMINDUSTRIES.COM

(SEE CHM IND., INC. PROCEDURE CHM-PR-1.7.3-F1 FOR STANDARD TOLERANCES)

QTY: 1 | GLM: (FT-K) 1554.4 | JOB NO. 12899 | PART NO. 12899-01200-MID | DWG NO. 12899-01200

CUST NAME: GREENVILLE UTILITIES STEEL STRUCTURES- NC
STR #: 55 TYPE/CLASS-HEIGHT: S18-88'-0"
DESCRIPTION: MIDDLE SECTION, 35.27" X 25.60" X 5/16" X 43'-0""

SCALE: NTS
DO NOT SCALE DRAWING
REV: 1 | SHEET: 3 of 6

THIS DWG IS PROPERTY OF CHM INDUSTRIES AND CONTAINS PROPRIETARY INFORMATION WHICH MAY NOT BE COPIED OR REPRODUCED WITHOUT PRIOR WRITTEN CONSENT FROM CHM INDUSTRIES.

FINISH:	BLACK WEIGHT	GALVANIZED WEIGHT
GALVANIZED	2702 LBS	2864 LBS
WEIGHTS ABOVE INCLUDE ALL BOM ITEMS		

SEE GENERAL NOTES AND DETAILS SHEET FOR SUPPLEMENTARY INFORMATION

ITEM #	PART #	DESCRIPTION	MAT'L	QTY.
1	12899-01200-SHT	SHAFT, 12S, 27.12" X 17.00" X 1/4" X 45'-0"	A572 GR65	1
2	12899-01200-TS	TOP STRAP, 16 3/8" X 2" X 3/16"	A572 GR65	1
3	12899-01200-CP	COVER PLATE, Ø18 5/8" X 3/16"	A572 GR65	1
4	12899-01200-VS201	VANG, OBROUND, 2-SIDED, 26 1/8" X 3" X 5/8"	A572 GR65	1
5	44018	WASHER, FLAT, 1/2", HDG, F436 T1	F436-T1	1
6	43029	NUT, HEX, 1/2-13, BLK, A563 DH	A563-DH	1
7	43026	NUT, HEAVY HEX, 1-8, A563 DH3	A563-DH3	4
8	43010	NUT, HEAVY HEX, 1/2-13, HDG, A563 DH	A563-DH	1
9	42120	BOLT, 1/2-13 X 1-3/4", HDG, HH, A307 A	A307-A	1
10	B22011	4X4 ID TAG, A588	A588	1

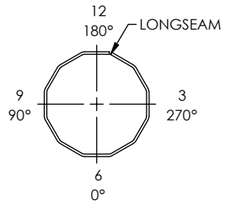

ORIENTATION DETAIL
TOP VIEW

GREENVILLE UTILITIES STEEL STRUCTURES- NC
STR#: 55, S18-88'-0"
SEC WT: 2864 LBS
DOM: [mm/YYYY]
CHM-12899-01200
12899-01200-TOP

ID TAG

TEXT TO BE 7/16" LETTERS
TAGS TO BE ORIENTED ON 0° FLAT
WEIGHT ON ID TAG IS FINISHED GALV. WEIGHT

HOLE CHART		
HOLE SIZE (INCH)	DISTANCE FROM TOP OF SHAFT	FLAT(S)
13/16"	8' - 0"	3, 9
13/16"	9' - 0"	3, 9
13/16"	16' - 0"	3, 9
13/16"	17' - 0"	3, 9
13/16"	24' - 0"	3, 9
13/16"	25' - 0"	3, 9
11/16"	33' - 0"	6, 12
11/16"	34' - 0"	6, 12
11/16"	37' - 0"	6, 12
11/16"	38' - 0"	6, 12
11/16"	41' - 0"	6, 12
11/16"	42' - 0"	6, 12

CUSTOMER PLEASE VERIFY HOLES AT 41'-0" & 42'-0" ELEVATIONS ARE FALLING IN BETWEEN SLIP JOINT. PLEASE SUGGEST.

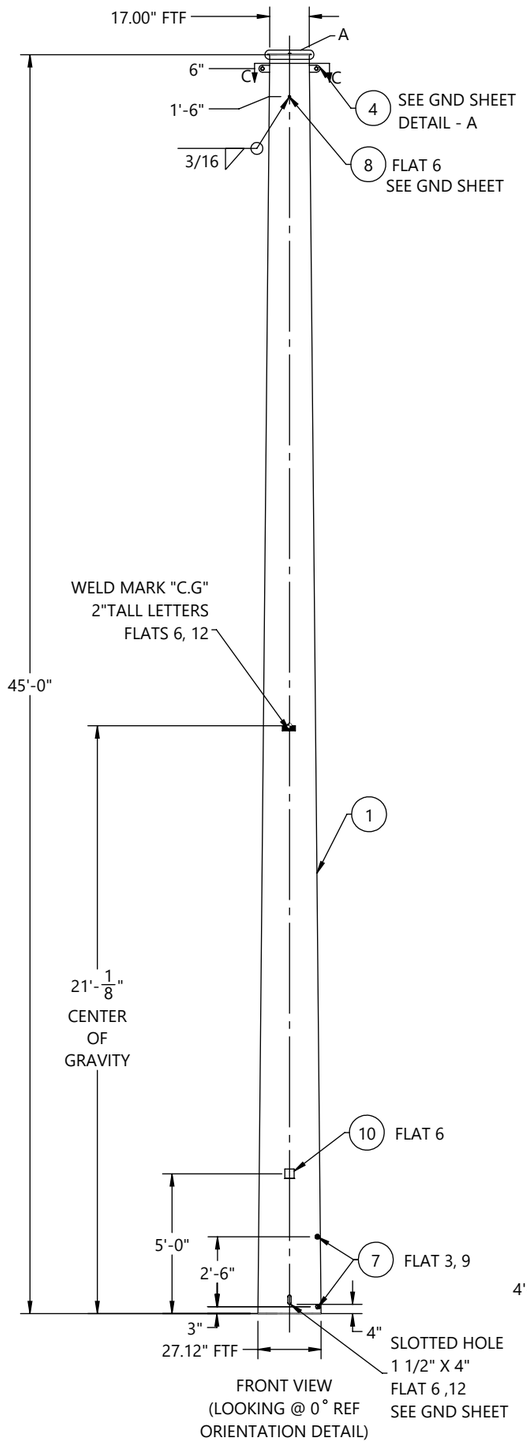

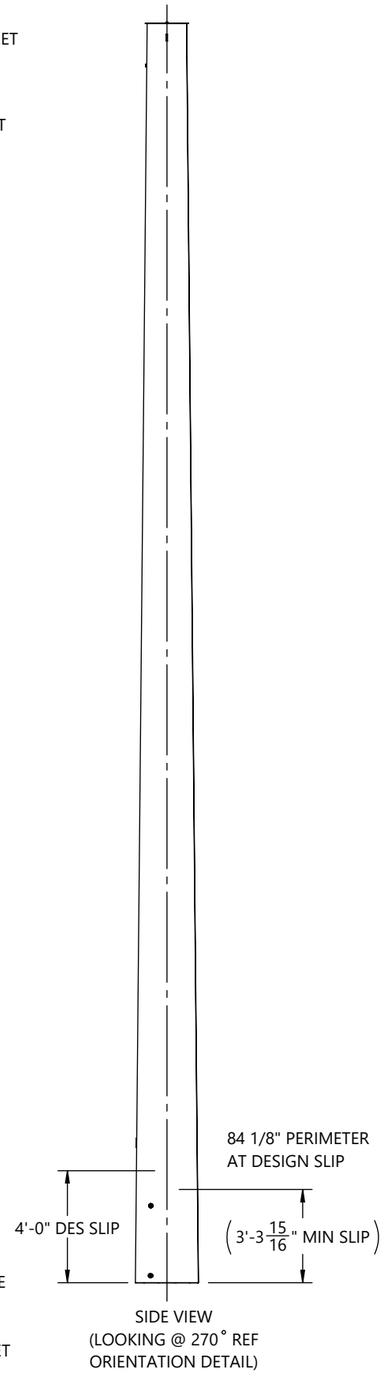

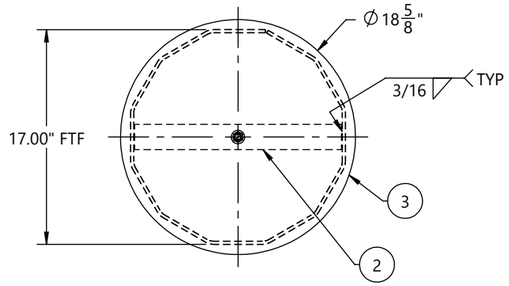

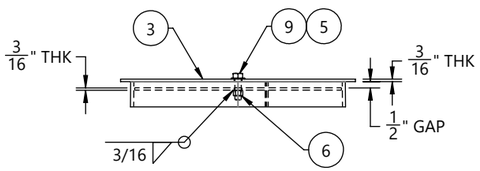

DETAIL A

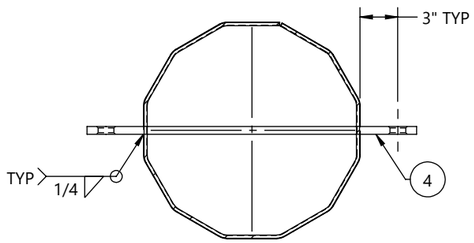

SECTION C-C

BY		DATE
DRAWN:	KB	06/29/2026
CHK'D:	EV	06/29/2026

(SEE CHM IND., INC. PROCEDURE CHM-PR-1.7.3-F1 FOR STANDARD TOLERANCES)

REV.	ECR #	DESCRIPTION	APPROVED BY	DATE
1		SUBMITTED FOR APPROVAL	EV	06/29/2026

REVISIONS

CHM INDUSTRIES
700 E. McLEROY BLVD
SAGINAW, TEXAS 76179
682.286.0046 PH
682.286.0086 FX
CHMINDUSTRIES.COM

QTY: 1 | GLM: (FT-K) 1554.4 | JOB NO. 12899 | PART NO. 12899-01200-TOP | DWG NO. 12899-01200

CUST NAME: GREENVILLE UTILITIES STEEL STRUCTURES- NC
STR #: 55 TYPE/CLASS-HEIGHT: S18-88'-0"
DESCRIPTION: TOP SECTION, 27.12" X 17.00" X 1/4" X 45'-0"

SCALE: NTS DO NOT SCALE DRAWING
REV.: 1 SHEET: 4 of 6

THIS DWG IS PROPERTY OF CHM INDUSTRIES AND CONTAINS PROPRIETARY INFORMATION WHICH MAY NOT BE COPIED OR REPRODUCED WITHOUT PRIOR WRITTEN CONSENT FROM CHM INDUSTRIES.

SEE GENERAL NOTES AND DETAILS SHEET FOR SUPPLEMENTARY INFORMATION

INDIVIDUAL STRUCTURE BILL OF MATERIALS			
ITEM NO.	PART NUMBER	DESCRIPTION	QTY.
1	12899-01200-BOT	BOTTOM SECTION, 35.42" X 33.40" X 5/16" X 9'-0"	1
1.1	12899-01200-SHB	SHAFT, 12S, 35.42" X 33.40" X 5/16" X 9'-0"	1
1.2	B22011	4X4 ID TAG, A588	1
1.3	43026	NUT, HEAVY HEX, 1-8, A563 DH3	4
1.4	ASSY-01200-CAS-MN	STRUCTURE, 35.42" X 35.42" X 21'-6"	1
1.4.1	ASSY-01200-CAS-SNG	SINGLE SECTION, 35.42" X 35.42" X 5/16" X 21'-6"	1
1.4.1.1	1899-01200-CAS-SHS	SHAFT, 12S, 35.42" X 35.42" X 5/16" X 21'-6"	1
1.4.1.2	12899-01200-CAS-SHG	GND SLV HALF, 12S, 35.80" X 35.80" X 3/16" X 4'-0"	2
1.4.1.3	12899-01200-PLT	SPLICE PLATE, Ø42 7/16" X 1"	1
1.5	12899-01200-EAR	DRIVING EAR 1'-0" X 1'-4 15/16" X1"	2
1.6	43010	NUT, HEAVY HEX, 1/2-13, HDG, A563 DH	1
2	12899-01200-MID	MIDDLE SECTION, 35.27" X 25.60" X 5/16" X 43'-0""	1
2.1	12899-01200-SHM	SHAFT, 12S, 35.27" X 25.60" X 5/16" X 43'-0"	1
2.2	B22011	4X4 ID TAG, A588	1
2.3	43026	NUT, HEAVY HEX, 1-8, A563 DH3	8
2.4	43010	NUT, HEAVY HEX, 1/2-13, HDG, A563 DH	1
2.5	12899-01200-VS209	VANG, OBROUND, 2-SIDED, 36 3/16" X 3" X 5/8"	1
3	12899-01200-TOP	TOP SECTION, 27.12" X 17.00" X 1/4" X 45'-0"	1
3.1	12899-01200-SHT	SHAFT, 12S, 27.12" X 17.00" X 1/4" X 45'-0"	1
3.2	12899-01200-TS	TOP STRAP, 16 3/8" X 2" X 3/16"	1
3.3	12899-01200-VS201	VANG, OBROUND, 2-SIDED, 26 1/8" X 3" X 5/8"	1
3.4	B22011	4X4 ID TAG, A588	1
3.5	43026	NUT, HEAVY HEX, 1-8, A563 DH3	4
3.6	43010	NUT, HEAVY HEX, 1/2-13, HDG, A563 DH	1
3.7	43029	NUT, HEX, 1/2-13, BLK, A563 DH	1
3.8	12899-01200-CP	COVER PLATE, Ø18 5/8" X 3/16"	1
3.9	44018	WASHER, FLAT, 1/2", HDG, F436 T1	1
3.10	42120	BOLT, 1/2-13 X 1-3/4", HDG, HH, A307 A	1

BY		DATE
DRAWN:	KB	06/29/2026
CHK'D:	EV	06/29/2026

CHM INDUSTRIES
700 E. McLEROY BLVD
SAGINAW, TEXAS 76179
682.286.0046 PH
682.286.0086 FX
CHMINDUSTRIES.COM

(SEE CHM IND., INC. PROCEDURE CHM-PR-1.7.3-F1 FOR STANDARD TOLERANCES)

QTY: 1 | GLM: (FT-K) 1554.4 | JOB NO. 12899 | PART NO. 12899-01200-SBOM | DWG NO. 12899-01200

CUST NAME: GREENVILLE UTILITIES STEEL STRUCTURES- NC
STR #: 55 TYPE/CLASS-HEIGHT: S18-88'-0"
DESCRIPTION: STRUCTURE, 35.42" X 17.00" X 88'-0"

SCALE: NTS DO NOT SCALE DRAWING | REV. 1 | SHEET: 5 of 6

THIS DWG IS PROPERTY OF CHM INDUSTRIES AND CONTAINS PROPRIETARY INFORMATION WHICH MAY NOT BE COPIED OR REPRODUCED WITHOUT PRIOR WRITTEN CONSENT FROM CHM INDUSTRIES.

SEE GENERAL NOTES AND DETAILS SHEET FOR SUPPLEMENTARY INFORMATION

TOTAL JOB MATERIAL REQUIREMENTS				
ITEM NO.	PART NUMBER	DESCRIPTION	QTY.	JOB QTY.
1	42120	BOLT, 1/2-13 X 1-3/4", HDG, HH, A307 A	1	1
2	43026	NUT, HEAVY HEX, 1-8, A563 DH3	16	16
3	43029	NUT, HEX, 1/2-13, BLK, A563 DH	1	1
4	44018	WASHER, FLAT, 1/2", HDG, F436 T1	1	1
5	B22011	4X4 ID TAG, A588	3	3
6	12899-01200-VS209	VANG, OBROUND, 2-SIDED, 36 3/16" X 3" X 5/8"	1	1
7	12899-01200-CP	COVER PLATE, Ø18 5/8" X 3/16"	1	1
8	12899-01200-SHB	SHAFT, 12S, 35.42" X 33.40" X 5/16" X 9'-0"	1	1
9	12899-01200-SHM	SHAFT, 12S, 35.27" X 25.60" X 5/16" X 43'-0"	1	1
10	12899-01200-SHT	SHAFT, 12S, 27.12" X 17.00" X 1/4" X 45'-0"	1	1
11	12899-01200-TS	TOP STRAP, 16 3/8" X 2" X 3/16"	1	1
12	43010	NUT, HEAVY HEX, 1/2-13, HDG, A563 DH	3	3
13	12899-01200-VS201	VANG, OBROUND, 2-SIDED, 26 1/8" X 3" X 5/8"	1	1
14	1899-01200-CAS-SHS	SHAFT, 12S, 35.42" X 35.42" X 5/16" X 21'-6"	1	1
15	12899-01200-CAS-SHG	GND SLV HALF, 12S, 35.80" X 35.80" X 3/16" X 4'-0"	2	2
16	12899-01200-PLT	SPLICE PLATE, Ø42 7/16" X 1"	1	1
17	12899-01200-EAR	DRIVING EAR 1'-0" X 1'-4 15/16" X1"	2	2

BY	DATE
DRAWN: KB	06/29/2026
CHK'D: EV	06/29/2026

CHM INDUSTRIES

700 E. McLEROY BLVD
SAGINAW, TEXAS 76179
682.286.0046 PH
682.286.0086 FX
CHMINDUSTRIES.COM

(SEE CHM IND., INC. PROCEDURE CHM-PR-1.7.3-F1 FOR STANDARD TOLERANCES)

QTY: 1	GLM: (FT-K) 1554.4	JOB NO. 12899	PART NO. 12899-01200-PBOM	DWG NO. 12899-01200

CUST NAME: GREENVILLE UTILITIES STEEL STRUCTURES- NC
STR #: 55 TYPE/CLASS-HEIGHT: S18-88'-0"
DESCRIPTION: STRUCTURE, 35.42" X 17.00" X 88'-0"

SCALE: NTS
DO NOT SCALE DRAWING
REV: 1 SHEET: 6 of 6

THIS DWG IS PROPERTY OF CHM INDUSTRIES AND CONTAINS PROPRIETARY INFORMATION WHICH MAY NOT BE COPIED OR REPRODUCED WITHOUT PRIOR WRITTEN CONSENT FROM CHM INDUSTRIES.

FINISH:	BLACK WEIGHT	GALVANIZED WEIGHT
GALVANIZED	12200 LBS	12932 LBS
WEIGHTS ABOVE INCLUDE ALL BOM ITEMS		

SEE GENERAL NOTES AND DETAILS SHEET FOR SUPPLEMENTARY INFORMATION

ITEM #	PART #	DESCRIPTION	QTY.
1	12899-01300-BOT	BOTTOM SECTION, 35.08" X 33.16" X 5/16" X 8'-9"	1
2	12899-01300-MID	MIDDLE SECTION, 34.95" X 24.45" X 5/16" X 47'-9"	1
3	12899-01300-TOP	TOP SECTION, 25.90" X 16.00" X 1/4" X 45'-0"	1

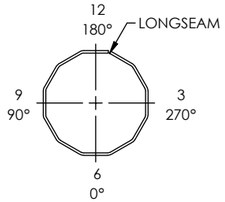

ORIENTATION DETAIL
TOP VIEW

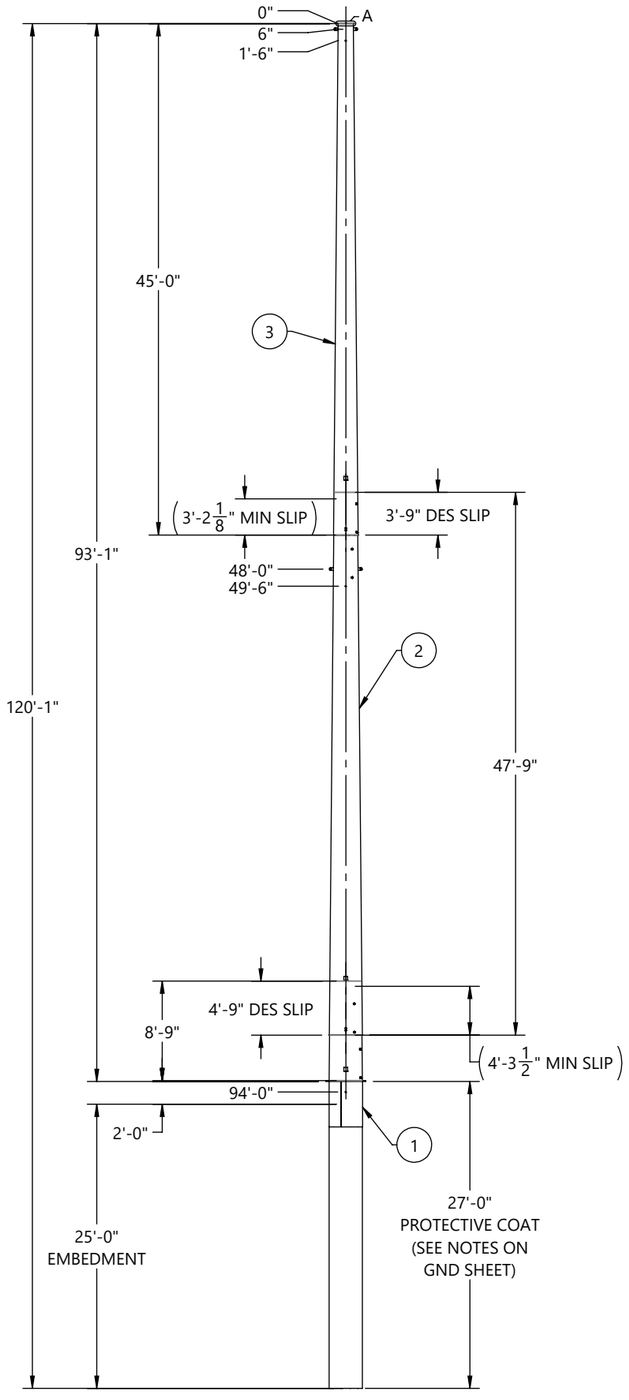

FRONT VIEW
(LOOKING @ 0° REF
ORIENTATION DETAIL)

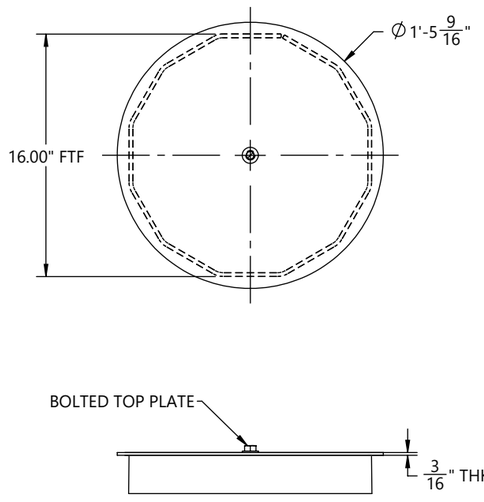

DETAIL A

HOLE CHART		
HOLE SIZE (INCH)	DISTANCE FROM TOP OF SHAFT	FLAT(S)
13/16"	8' - 0"	3, 9
13/16"	9' - 0"	3, 9
13/16"	16' - 0"	3, 9
13/16"	17' - 0"	3, 9
13/16"	24' - 0"	3, 9
13/16"	25' - 0"	3, 9
11/16"	33' - 0"	6, 12
11/16"	34' - 0"	6, 12
11/16"	37' - 0"	6, 12
11/16"	38' - 0"	6, 12
11/16"	41' - 0"	6, 12
11/16"	42' - 0"	6, 12

CUSTOMER PLEASE VERIFY
HOLES AT 41'-0" & 42'-0"
ELEVATIONS ARE FALLING
IN BETWEEN SLIP JOINT.
PLEASE SUGGEST.

REV.	ECR #	DESCRIPTION	APPROVED BY	DATE
1		SUBMITTAL FOR APPROVAL	EV	07/20/2026

REVISIONS

BY		DATE
DRAWN:	KB	06/29/2026
CHK'D:	EV	06/29/2026

CHM INDUSTRIES
700 E. McLEROY BLVD
SAGINAW, TEXAS 76179
682.286.0046 PH
682.286.0086 FX
CHMINDUSTRIES.COM

(SEE CHM IND., INC. PROCEDURE CHM-PR-1.7.3-F1 FOR STANDARD TOLERANCES)

QTY: 1 | GLM: (FT-K) 1554.29 | JOB NO. 12899 | PART NO. 12899-01300-MN | DWG NO. 12899-01300

CUST NAME: GREENVILLE UTILITIES STEEL STRUCTURES- NC
STR #: 56 TYPE/CLASS-HEIGHT: S17-95'-0"
DESCRIPTION: STRUCTURE, 35.08" X 16.00" X 93'-0"

SCALE: NTS
DO NOT SCALE DRAWING
REV. 1 | SHEET: 1 of 6

THIS DWG IS PROPERTY OF CHM INDUSTRIES AND CONTAINS PROPRIETARY INFORMATION WHICH MAY NOT BE COPIED OR REPRODUCED WITHOUT PRIOR WRITTEN CONSENT FROM CHM INDUSTRIES.

FINISH:	BLACK WEIGHT	GALVANIZED WEIGHT
GALVANIZED	4833 LBS	5123 LBS
WEIGHTS ABOVE INCLUDE ALL BOM ITEMS		

SEE GENERAL NOTES AND DETAILS SHEET FOR SUPPLEMENTARY INFORMATION

ITEM #	PART #	DESCRIPTION	MAT'L	QTY.
1	12899-01300-SHB	SHAFT, 12S, 35.08" X 33.16" X 5/16" X 8'-9"	A572 GR65	1
2	12899-01300-CAS-SHS	SHAFT, 12S, 35.08" X 35.08" X 5/16" X 27'-0"	A572 GR65	1
3	12899-01300-CAS-SHG	GND SLV HALF, 12S, 35.46" X 35.46" X 3/16" X 4'-0"	A572 GR65	2
4	12899-01300-PLT	SPLICE PLATE, Ø42 1/16" X 1"	A572 GR65	1
5	12899-01300-EAR	DRIVING EAR, 1'-0" X 1'-4 13/16" X1"	A572 GR65	2
6	B22011	4X4 ID TAG, A588	A588	1
7	43026	NUT, HEAVY HEX, 1-8, A563 DH3	A563-DH3	4
8	43010	NUT, HEAVY HEX, 1/2-13, HDG, A563 DH	A563-DH	1

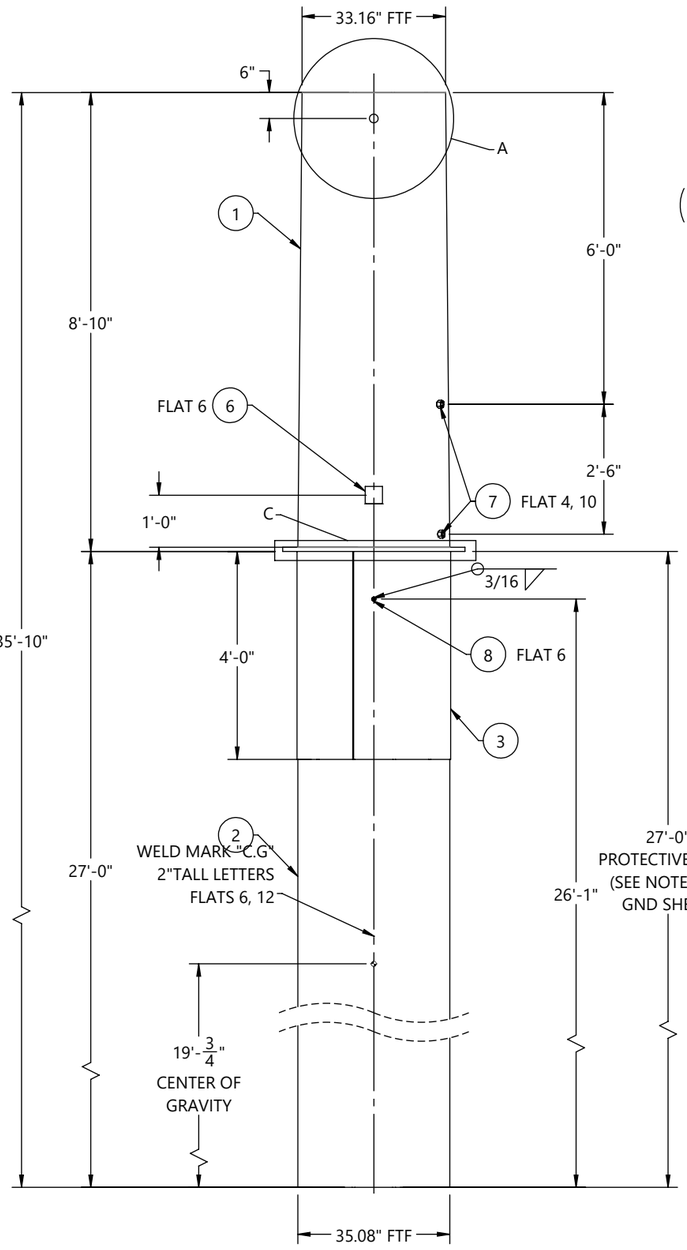

FRONT VIEW
(LOOKING @ 0° REF
ORIENTATION DETAIL)

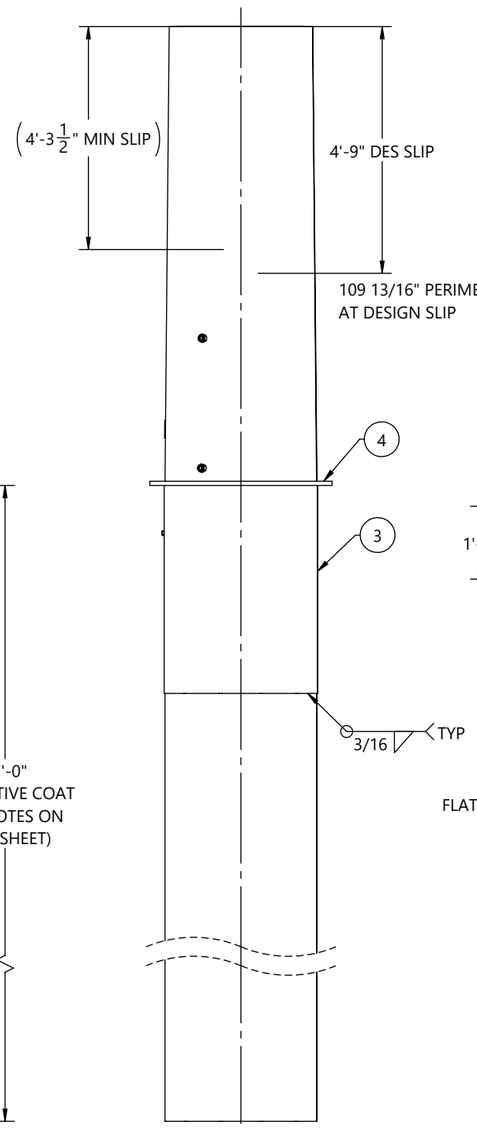

SIDE VIEW
(LOOKING @ 270° REF
ORIENTATION DETAIL)

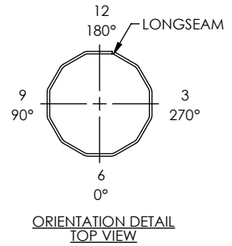

ORIENTATION DETAIL
TOP VIEW

GREENVILLE UTILITIES STEEL STRUCTURES- NC
STR#: 56, S17-95'-0"
GLM: 1554.29 FT-K
STR WT: 12932 LBS
SEC WT: 5123 LBS
DOM: [mm/YYYY]
CHM-12899-01300
12899-01300-BOT

ID TAG

TEXT TO BE 7/16" LETTERS
TAGS TO BE ORIENTED ON 0° FLAT
WEIGHT ON ID TAG IS FINISHED GALV. WEIGHT

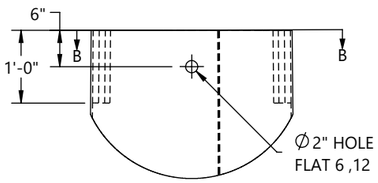

DETAIL A

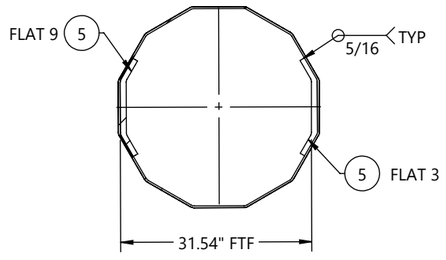

SECTION B-B

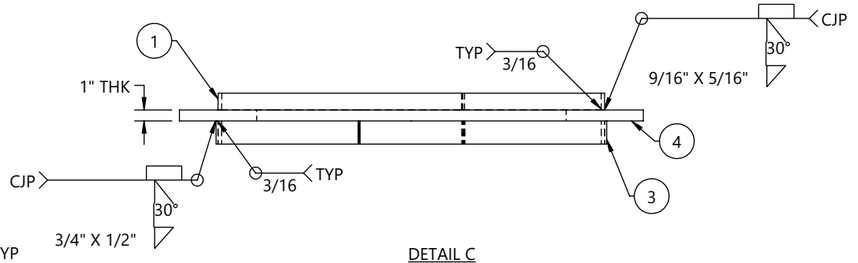

DETAIL C

BY		DATE
DRAWN:	KB	06/29/2026
CHK'D:	EV	06/29/2026

REV.	ECR #	DESCRIPTION	APPROVED BY	DATE
1		SUBMITTAL FOR APPROVAL	EV	07/20/2026

REVISIONS

CHM INDUSTRIES
700 E. McLEROY BLVD
SAGINAW, TEXAS 76179
682.286.0046 PH
682.286.0086 FX
CHMINDUSTRIES.COM

(SEE CHM IND., INC. PROCEDURE CHM-PR-1.7.3-F1 FOR STANDARD TOLERANCES)

QTY: 1	GLM: (FT-K) 1554.29	JOB NO. 12899	PART NO. 12899-01300-BOT	DWG NO. 12899-01300

CUST NAME: GREENVILLE UTILITIES STEEL STRUCTURES- NC
STR #: 56 TYPE/CLASS-HEIGHT: S17-95'-0"
DESCRIPTION: BOTTOM SECTION, 35.08" X 33.16" X 5/16" X 8'-9"

SCALE: NTS
DO NOT SCALE DRAWING
REV. 1 SHEET: 2 of 6

THIS DWG IS PROPERTY OF CHM INDUSTRIES AND CONTAINS PROPRIETARY INFORMATION WHICH MAY NOT BE COPIED OR REPRODUCED WITHOUT PRIOR WRITTEN CONSENT FROM CHM INDUSTRIES.

FINISH:	BLACK WEIGHT	GALVANIZED WEIGHT
GALVANIZED	4802 LBS	5090 LBS
WEIGHTS ABOVE INCLUDE ALL BOM ITEMS		

SEE GENERAL NOTES AND DETAILS SHEET FOR SUPPLEMENTARY INFORMATION

ITEM #	PART #	DESCRIPTION	MAT'L	QTY.
1	12899-01300-SHM	SHAFT, 12S, 34.95" X 24.45" X 5/16" X 47'-9"	A572 GR65	1
2	12899-01300-VS209	VANG, OBROUND, 2-SIDED, 34 15/16" X 3" X 5/8"	A572 GR65	1
3	43010	NUT, HEAVY HEX, 1/2-13, HDG, A563 DH	A563-DH	1
4	43026	NUT, HEAVY HEX, 1-8, A563 DH3	A563-DH3	8
5	B22011	4X4 ID TAG, A588	A588	1

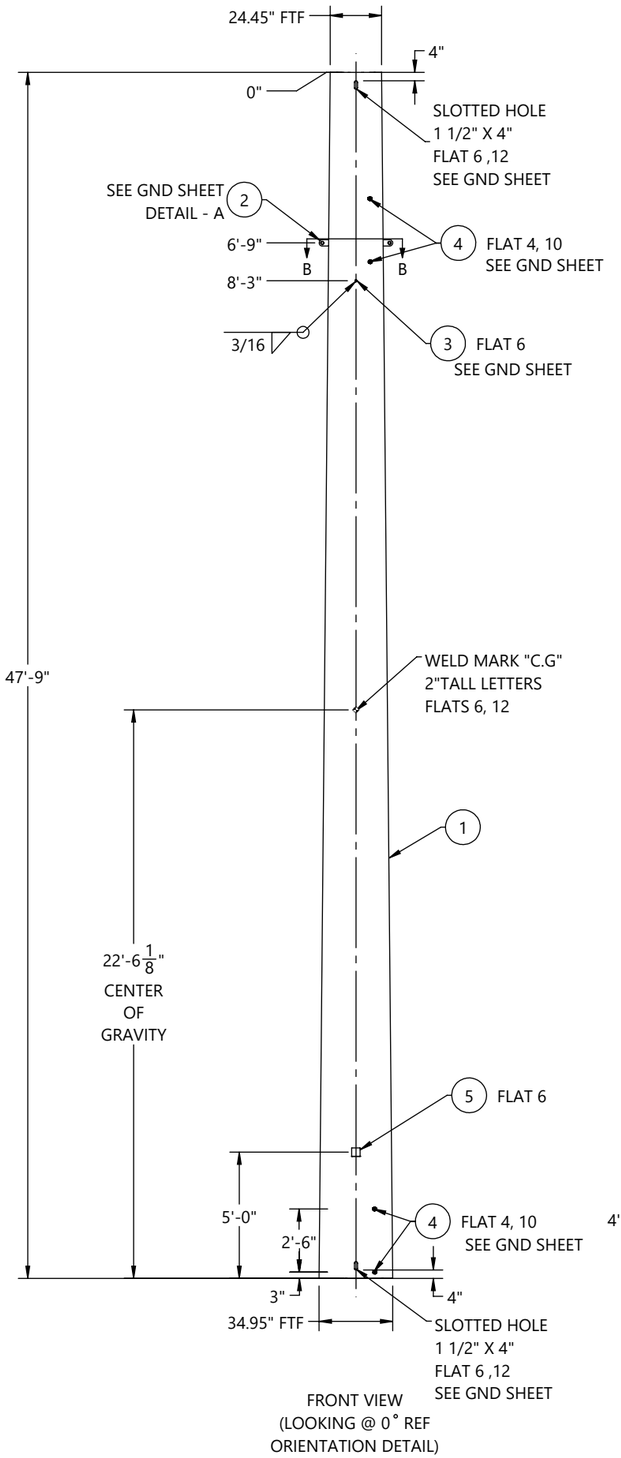

FRONT VIEW
(LOOKING @ 0˚ REF
ORIENTATION DETAIL)

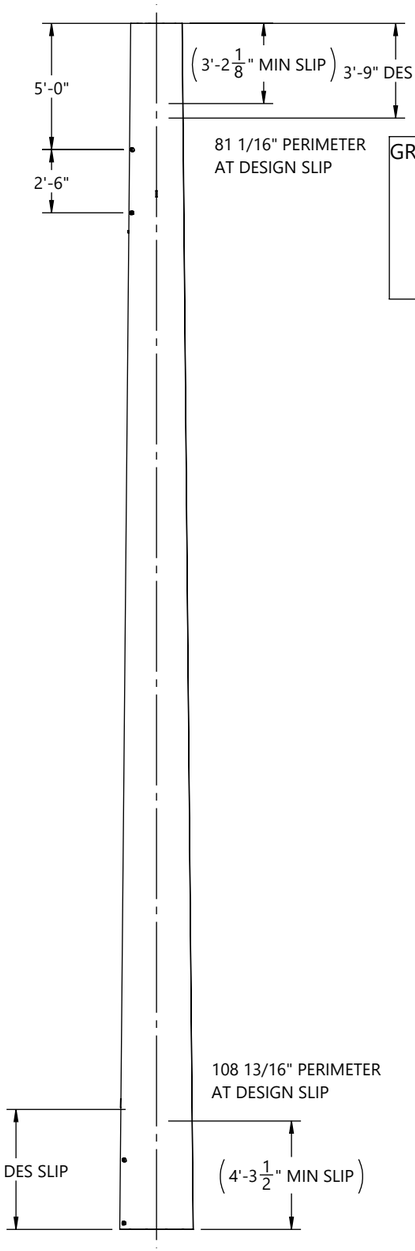

SIDE VIEW
(LOOKING @ 270˚ REF
ORIENTATION DETAIL)

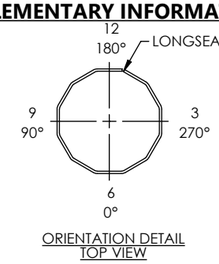

ORIENTATION DETAIL
TOP VIEW

GREENVILLE UTILITIES STEEL STRUCTURES- NC
STR#: 56, S17-95'-0"
SEC WT: 5090 LBS
DOM: [mm/YYYY]
CHM-12899-01300
12899-01300-MID

ID TAG

TEXT TO BE 7/16" LETTERS
TAGS TO BE ORIENTED ON 0° FLAT
WEIGHT ON ID TAG IS FINISHED GALV. WEIGHT

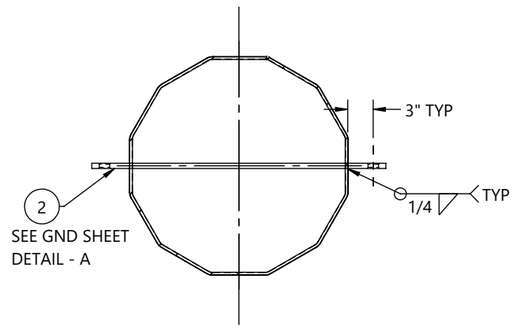

SECTION B-B

BY		DATE
DRAWN:	KB	06/29/2026
CHK'D:	EV	06/29/2026

REV.	ECR #	DESCRIPTION	APPROVED BY	DATE
1		SUBMITTAL FOR APPROVAL	EV	07/20/2026

REVISIONS

CHM INDUSTRIES
700 E. McLEROY BLVD
SAGINAW, TEXAS 76179
682.286.0046 PH
682.286.0086 FX
CHMINDUSTRIES.COM

(SEE CHM IND., INC. PROCEDURE CHM-PR-1.7.3-F1 FOR STANDARD TOLERANCES)

QTY: 1 | GLM: (FT-K) 1554.29 | JOB NO. 12899 | PART NO. 12899-01300-MID | DWG NO. 12899-01300

CUST NAME: GREENVILLE UTILITIES STEEL STRUCTURES- NC
STR #: 56 TYPE/CLASS-HEIGHT: S17-95'-0"
DESCRIPTION: MIDDLE SECTION, 34.95" X 24.45" X 5/16" X 47'-9"

SCALE: NTS
DO NOT SCALE DRAWING
REV.: 1 | SHEET: 3 of 6

THIS DWG IS PROPERTY OF CHM INDUSTRIES AND CONTAINS PROPRIETARY INFORMATION WHICH MAY NOT BE COPIED OR REPRODUCED WITHOUT PRIOR WRITTEN CONSENT FROM CHM INDUSTRIES.

FINISH:	BLACK WEIGHT	GALVANIZED WEIGHT
GALVANIZED	2565 LBS	2719 LBS
WEIGHTS ABOVE INCLUDE ALL BOM ITEMS		

SEE GENERAL NOTES AND DETAILS SHEET FOR SUPPLEMENTARY INFORMATION

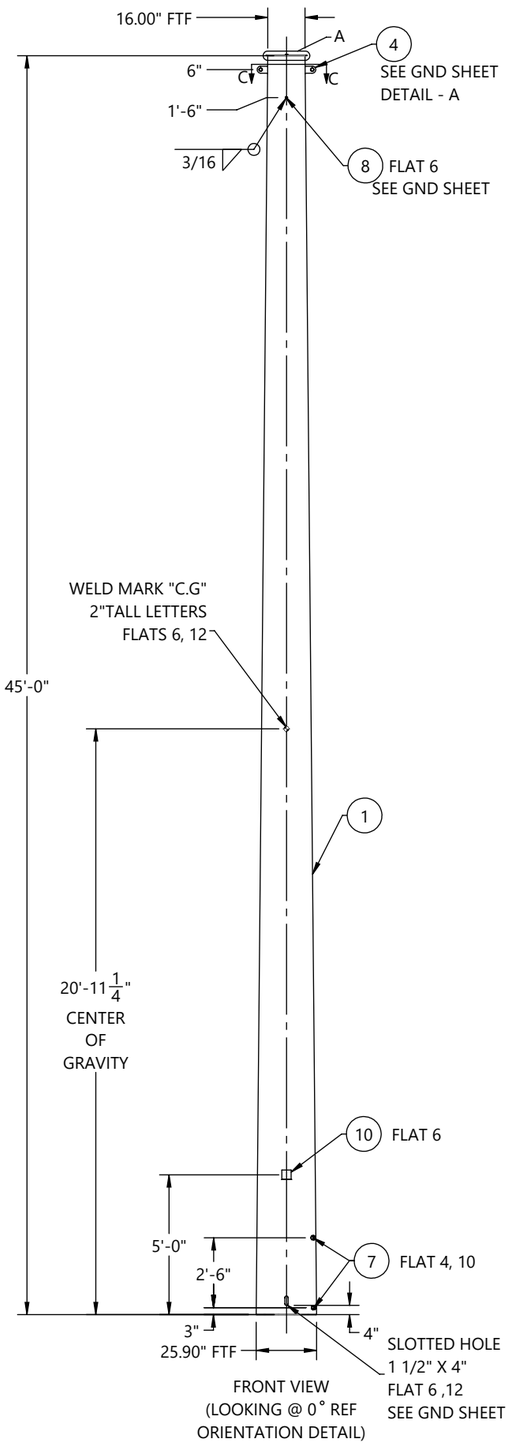

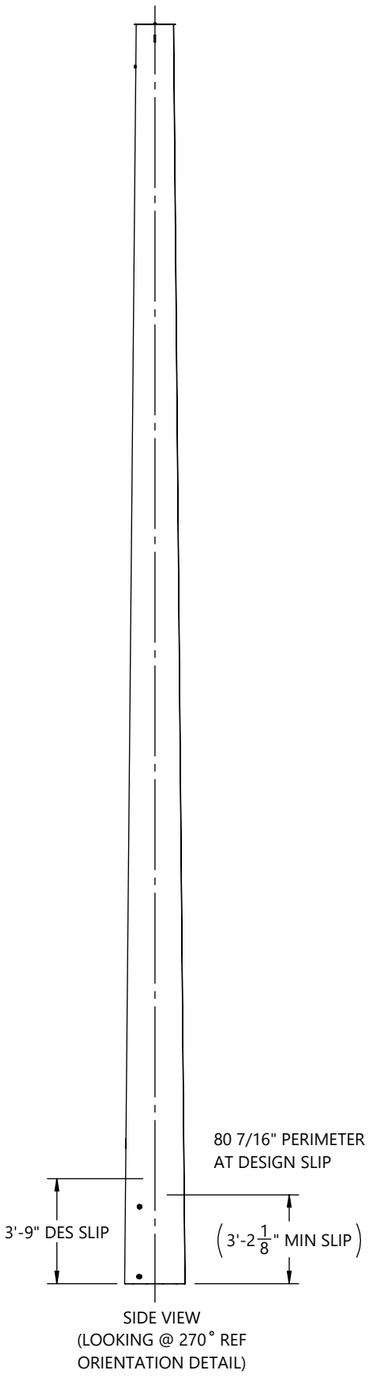

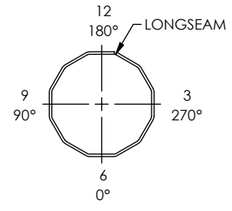

ORIENTATION DETAIL
TOP VIEW

ITEM #	PART #	DESCRIPTION	MAT'L	QTY.
1	12899-01300-SHT	SHAFT, 12S, 25.90" X 16.00" X 1/4" X 45'-0"	A572 GR65	1
2	12899-01300-TS	TOP STRAP, 15 3/8" X 2" X 3/16"	A572 GR65	1
3	12899-01300-CP	COVER PLATE, Ø17 9/16" X 3/16"	A572 GR65	1
4	12899-01300-VS201	VANG, OBROUND, 2-SIDED, 25 1/8" X 3" X 5/8"	A572 GR65	1
5	44018	WASHER, FLAT, 1/2", HDG, F436 T1	F436-T1	1
6	43029	NUT, HEX, 1/2-13, BLK, A563 DH	A563-DH	1
7	43026	NUT, HEAVY HEX, 1-8, A563 DH3	A563-DH3	4
8	43010	NUT, HEAVY HEX, 1/2-13, HDG, A563 DH	A563-DH	1
9	42120	BOLT, 1/2-13 X 1-3/4", HDG, HH, A307 A	A307-A	1
10	B22011	4X4 ID TAG, A588	A588	1

GREENVILLE UTILITIES STEEL STRUCTURES- NC
STR#: 56, S17-95'-0"
SEC WT: 2719 LBS
DOM: [mm/YYYY]
CHM-12899-01300
12899-01300-TOP

ID TAG

TEXT TO BE 7/16" LETTERS
TAGS TO BE ORIENTED ON 0° FLAT
WEIGHT ON ID TAG IS FINISHED GALV. WEIGHT

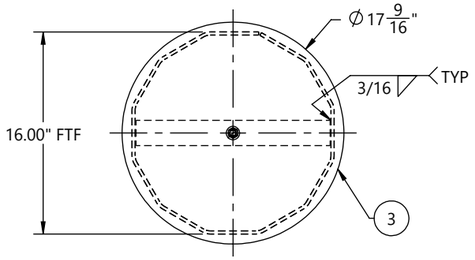

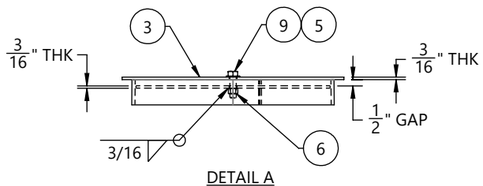

DETAIL A

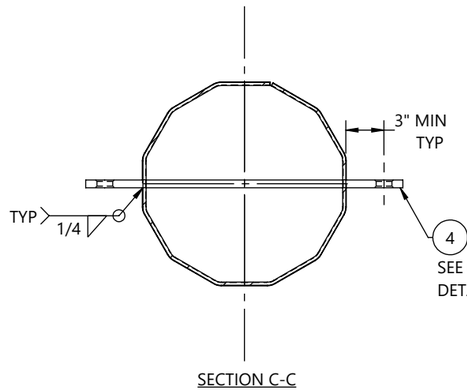

SECTION C-C

HOLE CHART		
HOLE SIZE (INCH)	DISTANCE FROM TOP OF SHAFT	FLAT(S)
13/16"	8' - 0"	3, 9
13/16"	9' - 0"	3, 9
13/16"	16' - 0"	3, 9
13/16"	17' - 0"	3, 9
13/16"	24' - 0"	3, 9
13/16"	25' - 0"	3, 9
11/16"	33' - 0"	6, 12
11/16"	34' - 0"	6, 12
11/16"	37' - 0"	6, 12
11/16"	38' - 0"	6, 12
11/16"	41' - 0"	6, 12
11/16"	42' - 0"	6, 12

CUSTOMER PLEASE VERIFY
HOLES AT 41'-0" & 42'-0"
ELEVATIONS ARE FALLING
IN BETWEEN SLIP JOINT.
PLEASE SUGGEST.

BY		DATE
DRAWN:	KB	06/29/2026
CHK'D:	EV	06/29/2026

REV.	ECR #	DESCRIPTION	APPROVED BY	DATE
1		SUBMITTAL FOR APPROVAL	EV	07/20/2026

REVISIONS

CHM INDUSTRIES
700 E. McLEROY BLVD
SAGINAW, TEXAS 76179
682.286.0046 PH
682.286.0086 FX
CHMINDUSTRIES.COM

(SEE CHM IND., INC. PROCEDURE CHM-PR-1.7.3-F1 FOR STANDARD TOLERANCES)

QTY: 1 | GLM: (FT-K) 1554.29 | JOB NO. 12899 | PART NO. 12899-01300-TOP | DWG NO. 12899-01300

CUST NAME: GREENVILLE UTILITIES STEEL STRUCTURES- NC
STR #: 56 TYPE/CLASS-HEIGHT: S17-95'-0"
DESCRIPTION: TOP SECTION, 25.90" X 16.00" X 1/4" X 45'-0"

SCALE: NTS DO NOT SCALE DRAWING
REV.: 1 SHEET: 4 of 6

THIS DWG IS PROPERTY OF CHM INDUSTRIES AND CONTAINS PROPRIETARY INFORMATION WHICH MAY NOT BE COPIED OR REPRODUCED WITHOUT PRIOR WRITTEN CONSENT FROM CHM INDUSTRIES.

SEE GENERAL NOTES AND DETAILS SHEET FOR SUPPLEMENTARY INFORMATION

INDIVIDUAL STRUCTURE BILL OF MATERIALS			
ITEM NO.	PART NUMBER	DESCRIPTION	QTY.
1	12899-01300-BOT	BOTTOM SECTION, 35.08" X 33.16" X 5/16" X 8'-9"	1
1.1	12899-01300-SHB	SHAFT, 12S, 35.08" X 33.16" X 5/16" X 8'-9"	1
1.2	B22011	4X4 ID TAG, A588	1
1.3	43026	NUT, HEAVY HEX, 1-8, A563 DH3	4
1.4	43010	NUT, HEAVY HEX, 1/2-13, HDG, A563 DH	1
1.5	ASSY-01300-CAS-MN	STRUCTURE, 35.08" X 35.08" X 27'-0"	1
1.5.1	ASSY-01300-CAS-SNG	SINGLE SECTION, 35.08" X 35.08" X 5/16" X 27'-0"	1
1.5.1.1	12899-01300-CAS-SHS	SHAFT, 12S, 35.08" X 35.08" X 5/16" X 27'-0"	1
1.5.1.2	12899-01300-CAS-SHG	GND SLV HALF, 12S, 35.46" X 35.46" X 3/16" X 4'-0"	2
1.5.1.3	12899-01300-PLT	SPLICE PLATE, Ø42 1/16" X 1"	1
1.6	12899-01300-EAR	DRIVING EAR, 1'-0" X 1'-4 13/16" X1"	2
2	12899-01300-MID	MIDDLE SECTION, 34.95" X 24.45" X 5/16" X 47'-9"	1
2.1	12899-01300-SHM	SHAFT, 12S, 34.95" X 24.45" X 5/16" X 47'-9"	1
2.2	B22011	4X4 ID TAG, A588	1
2.3	43026	NUT, HEAVY HEX, 1-8, A563 DH3	8
2.4	43010	NUT, HEAVY HEX, 1/2-13, HDG, A563 DH	1
2.5	12899-01300-VS209	VANG, OBROUND, 2-SIDED, 34 15/16" X 3" X 5/8"	1
3	12899-01300-TOP	TOP SECTION, 25.90" X 16.00" X 1/4" X 45'-0"	1
3.1	12899-01300-SHT	SHAFT, 12S, 25.90" X 16.00" X 1/4" X 45'-0"	1
3.2	12899-01300-TS	TOP STRAP, 15 3/8" X 2" X 3/16"	1
3.3	12899-01300-VS201	VANG, OBROUND, 2-SIDED, 25 1/8" X 3" X 5/8"	1
3.4	B22011	4X4 ID TAG, A588	1
3.5	43026	NUT, HEAVY HEX, 1-8, A563 DH3	4
3.6	43010	NUT, HEAVY HEX, 1/2-13, HDG, A563 DH	1
3.7	43029	NUT, HEX, 1/2-13, BLK, A563 DH	1
3.8	12899-01300-CP	COVER PLATE, Ø17 9/16" X 3/16"	1
3.9	44018	WASHER, FLAT, 1/2", HDG, F436 T1	1
3.10	42120	BOLT, 1/2-13 X 1-3/4", HDG, HH, A307 A	1

BY		DATE
DRAWN:	KB	06/29/2026
CHK'D:	EV	06/29/2026

CHM INDUSTRIES
700 E. McLEROY BLVD
SAGINAW, TEXAS 76179
682.286.0046 PH
682.286.0086 FX
CHMINDUSTRIES.COM

(SEE CHM IND., INC. PROCEDURE CHM-PR-1.7.3-F1 FOR STANDARD TOLERANCES)

QTY: 1 | GLM: (FT-K) 1554.29 | JOB NO. 12899 | PART NO. 12899-01300-SBOM | DWG NO. 12899-01300

CUST NAME: GREENVILLE UTILITIES STEEL STRUCTURES- NC

STR #: 56 TYPE/CLASS-HEIGHT: S17-95'-0"

DESCRIPTION: STRUCTURE, 35.08" X 16.00" X 93'-0"

SCALE: NTS DO NOT SCALE DRAWING

REV. 1 | SHEET: 5 of 6

THIS DWG IS PROPERTY OF CHM INDUSTRIES AND CONTAINS PROPRIETARY INFORMATION WHICH MAY NOT BE COPIED OR REPRODUCED WITHOUT PRIOR WRITTEN CONSENT FROM CHM INDUSTRIES.

SEE GENERAL NOTES AND DETAILS SHEET FOR SUPPLEMENTARY INFORMATION

TOTAL JOB MATERIAL REQUIREMENTS				
ITEM NO.	PART NUMBER	DESCRIPTION	QTY.	JOB QTY.
1	42120	BOLT, 1/2-13 X 1-3/4", HDG, HH, A307 A	1	1
2	43026	NUT, HEAVY HEX, 1-8, A563 DH3	16	16
3	43029	NUT, HEX, 1/2-13, BLK, A563 DH	1	1
4	44018	WASHER, FLAT, 1/2", HDG, F436 T1	1	1
5	B22011	4X4 ID TAG, A588	3	3
6	12899-01300-VS209	VANG, OBROUND, 2-SIDED, 34 15/16" X 3" X 5/8"	1	1
7	12899-01300-CP	COVER PLATE, Ø17 9/16" X 3/16"	1	1
8	12899-01300-SHB	SHAFT, 12S, 35.08" X 33.16" X 5/16" X 8'-9"	1	1
9	12899-01300-SHM	SHAFT, 12S, 34.95" X 24.45" X 5/16" X 47'-9"	1	1
10	12899-01300-SHT	SHAFT, 12S, 25.90" X 16.00" X 1/4" X 45'-0"	1	1
11	12899-01300-TS	TOP STRAP, 15 3/8" X 2" X 3/16"	1	1
12	43010	NUT, HEAVY HEX, 1/2-13, HDG, A563 DH	3	3
13	12899-01300-VS201	VANG, OBROUND, 2-SIDED, 25 1/8" X 3" X 5/8"	1	1
14	12899-01300-CAS-SHS	SHAFT, 12S, 35.08" X 35.08" X 5/16" X 27'-0"	1	1
15	12899-01300-CAS-SHG	GND SLV HALF, 12S, 35.46" X 35.46" X 3/16" X 4'-0"	2	2
16	12899-01300-PLT	SPLICE PLATE, Ø42 1/16" X 1"	1	1
17	12899-01300-EAR	DRIVING EAR, 1'-0" X 1'-4 13/16" X1"	2	2

BY		DATE
DRAWN:	KB	06/29/2026
CHK'D:	EV	06/29/2026

CHM INDUSTRIES
700 E. McLEROY BLVD
SAGINAW, TEXAS 76179
682.286.0046 PH
682.286.0086 FX
CHMINDUSTRIES.COM

(SEE CHM IND., INC. PROCEDURE CHM-PR-1.7.3-F1 FOR STANDARD TOLERANCES)

QTY: 1 | GLM: (FT-K) 1554.29 | JOB NO. 12899 | PART NO. 12899-01300-PBOM | DWG NO. 12899-01300

CUST NAME: GREENVILLE UTILITIES STEEL STRUCTURES- NC

STR #: 56 TYPE/CLASS-HEIGHT: S17-95'-0"

DESCRIPTION: STRUCTURE, 35.08" X 16.00" X 93'-0"

SCALE: NTS DO NOT SCALE DRAWING

REV: 1 SHEET: 6 of 6

THIS DWG IS PROPERTY OF CHM INDUSTRIES AND CONTAINS PROPRIETARY INFORMATION WHICH MAY NOT BE COPIED OR REPRODUCED WITHOUT PRIOR WRITTEN CONSENT FROM CHM INDUSTRIES.

FINISH:	BLACK WEIGHT	GALVANIZED WEIGHT
GALVANIZED	7888 LBS	8361 LBS
WEIGHTS ABOVE INCLUDE ALL BOM ITEMS		

SEE GENERAL NOTES AND DETAILS SHEET FOR SUPPLEMENTARY INFORMATION

ITEM #	PART #	DESCRIPTION	QTY.
1	12899-01400-BOT	BOTTOM SECTION, 26.27" X 24.71" X 5/16" X 8'-6"	1
2	12899-01400-MID	MIDDLE SECTION, 26.16" X 16.74" X 1/4" X 51'-6"	1
3	12899-01400-TOP	TOP SECTION, 17.82" X 10.50" X 1/4" X 40'-0"	1

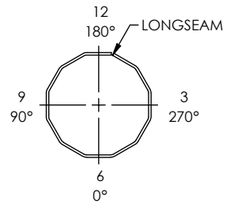

ORIENTATION DETAIL
TOP VIEW

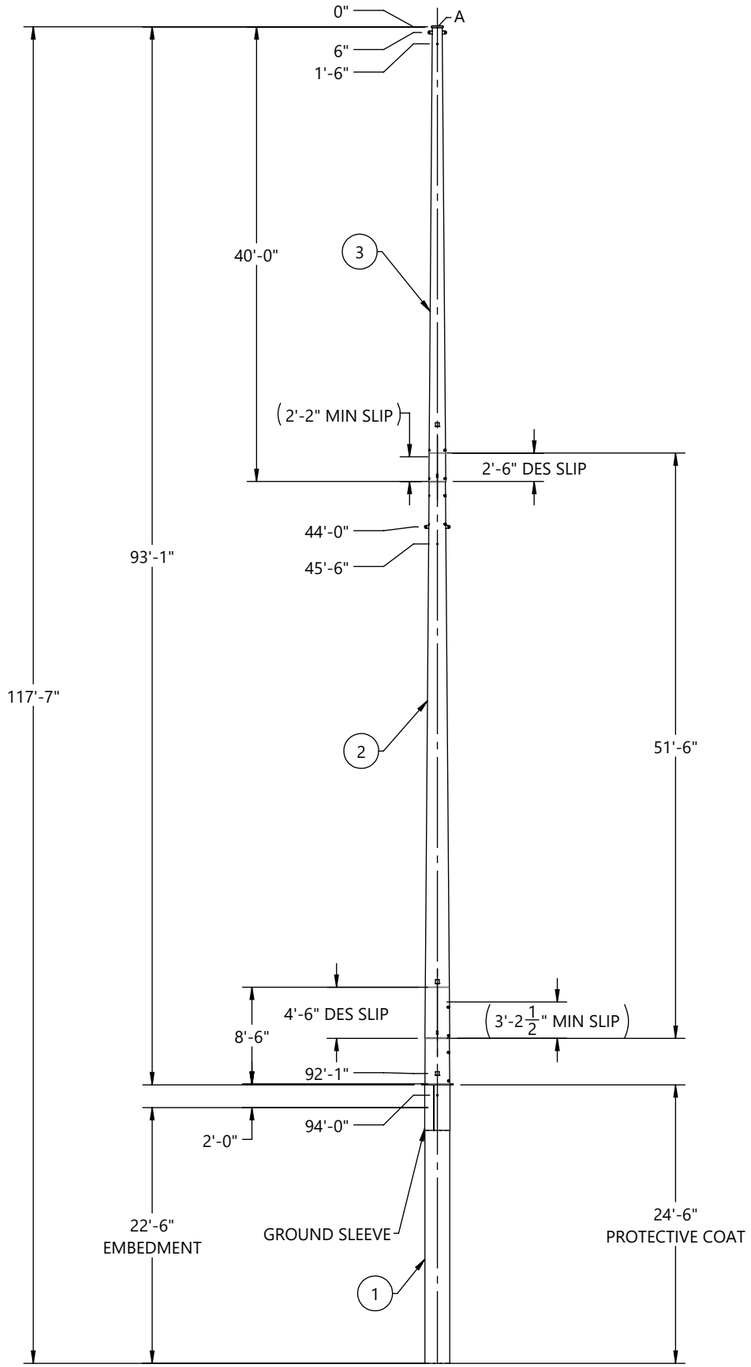

FRONT VIEW
(LOOKING @ 0° REF
ORIENTATION DETAIL)

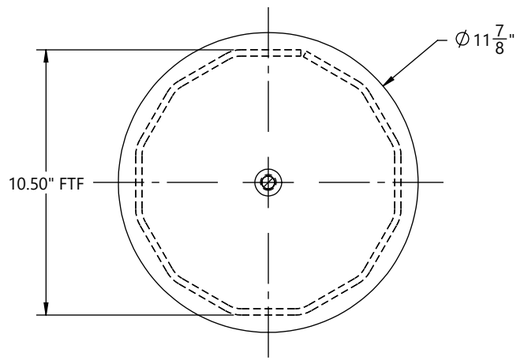

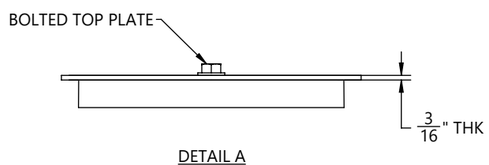

DETAIL A

HOLE CHART		
HOLE SIZE (INCH)	DISTANCE FROM TOP OF SHAFT	FLAT(S)
13/16"	8' - 0"	3, 9
13/16"	9' - 0"	3, 9
13/16"	14' - 0"	3, 9
13/16"	15' - 0"	3, 9
13/16"	20' - 0"	3, 9
13/16"	21' - 0"	3, 9
11/16"	29' - 0"	6, 12
11/16"	30' - 0"	6, 12
11/16"	33' - 0"	6, 12
11/16"	34' - 0"	6, 12
11/16"	37' - 0"	6, 12
11/16"	38' - 0"	6, 12

CUSTOMER PLEASE VERIFY
HOLES AT 37'-0"& 38'-0"
ELEVATION ARE
FALLING IN SLIP JOINT.
PLEASE SUGGEST

REV.	ECR #	DESCRIPTION	APPROVED BY	DATE
1		SUBMITTAL FOR APPROVAL	EV	07/17/2026

REVISIONS

BY		DATE
DRAWN:	KR	07/17/2026
CHK'D:	EV	07/17/2026

CHM INDUSTRIES
700 E. McLEROY BLVD
SAGINAW, TEXAS 76179
682.286.0046 PH
682.286.0086 FX
CHMINDUSTRIES.COM

(SEE CHM IND., INC. PROCEDURE CHM-PR-1.7.3-F1 FOR STANDARD TOLERANCES)

QTY: 1 | GLM: (FT-K) 681.01 | JOB NO. 12899 | PART NO. 12899-01400-MN | DWG NO. 12899-01400

CUST NAME: GREENVILLE UTILITIES STEEL STRUCTURES- NC

STR #: 57 TYPE/CLASS-HEIGHT: S07_4 - 95'-0"

DESCRIPTION: STRUCTURE, 26.27" X 10.50" X 93'-0"

SCALE: NTS
DO NOT SCALE DRAWING

REV. 1 | SHEET: 1 of 6

THIS DWG IS PROPERTY OF CHM INDUSTRIES AND CONTAINS PROPRIETARY INFORMATION WHICH MAY NOT BE COPIED OR REPRODUCED WITHOUT PRIOR WRITTEN CONSENT FROM CHM INDUSTRIES.

FINISH:	BLACK WEIGHT	GALVANIZED WEIGHT
GALVANIZED	3374 LBS	3576 LBS
WEIGHTS ABOVE INCLUDE ALL BOM ITEMS		

SEE GENERAL NOTES AND DETAILS SHEET FOR SUPPLEMENTARY INFORMATION

ITEM #	PART #	DESCRIPTION	MAT'L	QTY.
1	12899-01400-SHB	SHAFT, 12S, 26.27" X 24.71" X 5/16" X 8'-6"	A572 GR65	1
2	12899-01400-CAS-SHS	SHAFT, 12S, 26.27" X 26.27" X 5/16" X 24'-6"	A572 GR65	1
3	12899-01400-CAS-SHG	GND SLV HALF, 12S, 26.65" X 26.65" X 3/16" X 4'-0"	A572 GR65	2
4	12899-01400-PLT	SPLICE PLATE, Ø33 1/4" X 1"	A572 GR65	1
5	12899-01400-EAR	DRIVING EAR 1'-0" X 1'-1" x 1"	A572 GR65	2
6	43010	NUT, HEAVY HEX, 1/2-13, HDG, A563 DH	A563-DH	1
7	43026	NUT, HEAVY HEX, 1-8, A563 DH3	A563-DH3	4
8	B22011	4X4 ID TAG, A588	A588	1

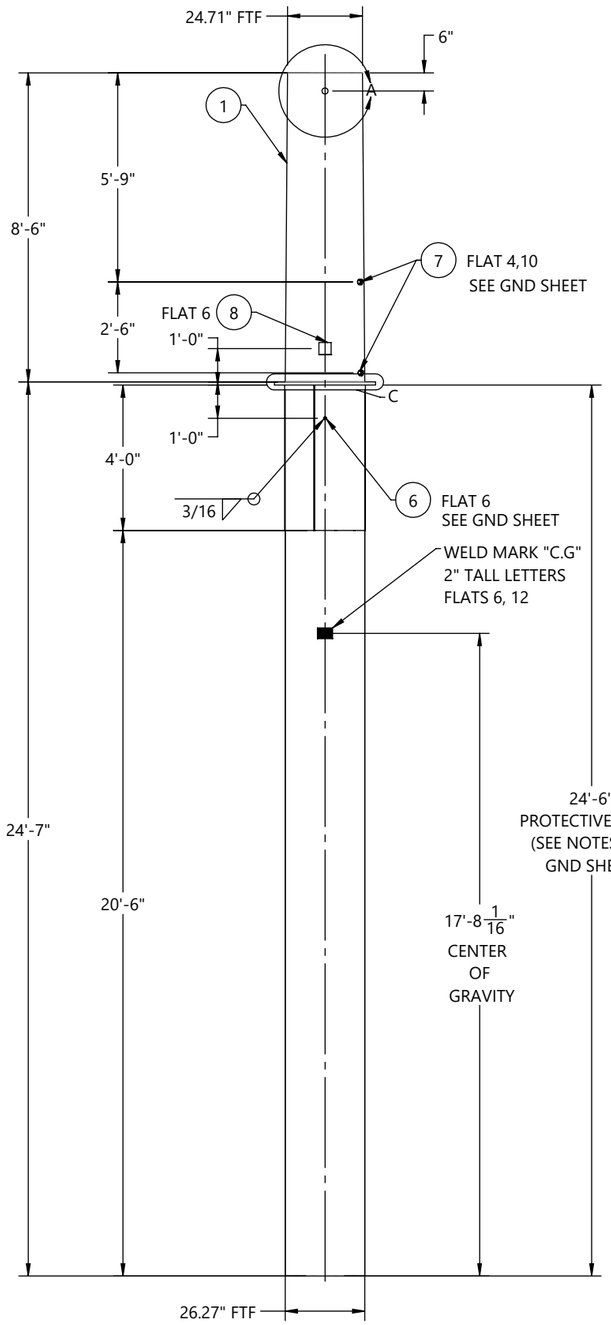

FRONT VIEW
(LOOKING @ 0° REF
ORIENTATION DETAIL)

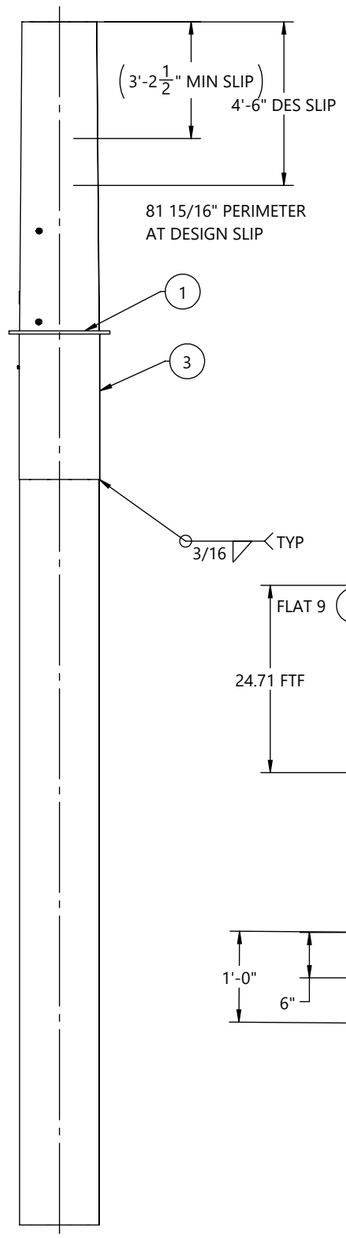

SIDE VIEW
(LOOKING @ 270° REF
ORIENTATION DETAIL)

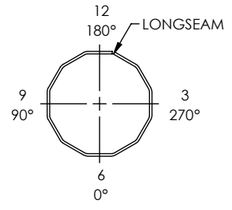

ORIENTATION DETAIL
TOP VIEW

GREENVILLE UTILITIES STEEL STRUCTURES- NC
STR#: 57, S07_4 - 95'-0"
GLM: 681.01 FT-K
STR WT: 8361 LBS
SEC WT: 3576 LBS
DOM: [mm/YYYY]
CHM-12899-01400
12899-01400-BOT

ID TAG

TEXT TO BE 7/16" LETTERS
TAGS TO BE ORIENTED ON 0° FLAT
WEIGHT ON ID TAG IS FINISHED GALV. WEIGHT

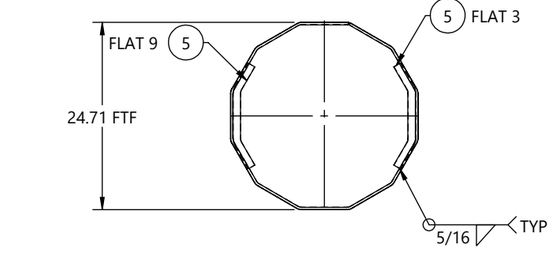

SECTION B-B

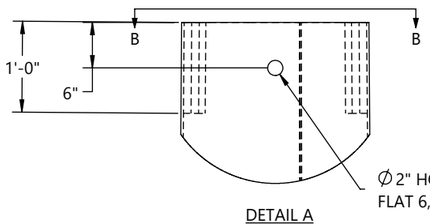

DETAIL A

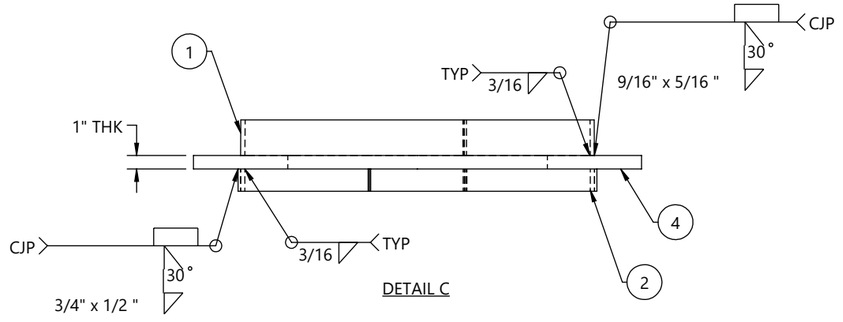

DETAIL C

BY		DATE
DRAWN:	KR	07/17/2026
CHK'D:	EV	07/17/2026

REV.	ECR #	DESCRIPTION	APPROVED BY	DATE
1		SUBMITTAL FOR APPROVAL	EV	07/17/2026

REVISIONS

CHM INDUSTRIES
700 E. McLEROY BLVD
SAGINAW, TEXAS 76179
682.286.0046 PH
682.286.0086 FX
CHMINDUSTRIES.COM

(SEE CHM IND., INC. PROCEDURE CHM-PR-1.7.3-F1 FOR STANDARD TOLERANCES)

QTY: 1 | GLM: (FT-K) 681.01 | JOB NO. 12899 | PART NO. 12899-01400-BOT | DWG NO. 12899-01400

CUST NAME: GREENVILLE UTILITIES STEEL STRUCTURES- NC
STR #: 57 TYPE/CLASS-HEIGHT: S07_4 - 95'-0"
DESCRIPTION: BOTTOM SECTION, 26.27" X 24.71" X 5/16" X 8'-6"

SCALE: NTS DO NOT SCALE DRAWING
REV. 1 | SHEET: 2 of 6

THIS DWG IS PROPERTY OF CHM INDUSTRIES AND CONTAINS PROPRIETARY INFORMATION WHICH MAY NOT BE COPIED OR REPRODUCED WITHOUT PRIOR WRITTEN CONSENT FROM CHM INDUSTRIES.

FINISH:	BLACK WEIGHT	GALVANIZED WEIGHT
GALVANIZED	2986 LBS	3165 LBS
WEIGHTS ABOVE INCLUDE ALL BOM ITEMS		

SEE GENERAL NOTES AND DETAILS SHEET FOR SUPPLEMENTARY INFORMATION

ITEM #	PART #	DESCRIPTION	MAT'L	QTY.
1	12899-01400-SHM	SHAFT, 12S, 26.16" X 16.74" X 1/4" X 51'-6"	A572 GR65	1
2	12899-00400-VS202	VANG, OBROUND, 2-SIDED, 27" X 3" X 5/8"	A572 GR65	1
3	43026	NUT, HEAVY HEX, 1-8, A563 DH3	A563-DH3	8
4	43010	NUT, HEAVY HEX, 1/2-13, HDG, A563 DH	A563-DH	1
5	B22011	4X4 ID TAG, A588	A588	1

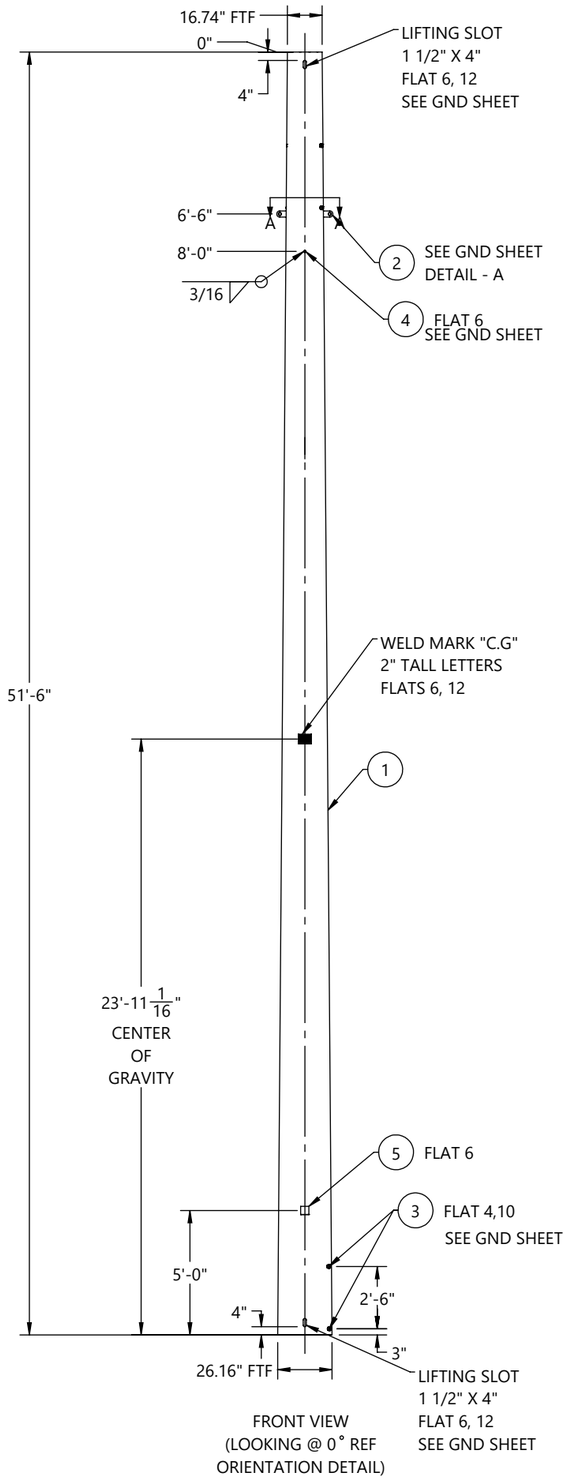

FRONT VIEW
(LOOKING @ 0° REF
ORIENTATION DETAIL)

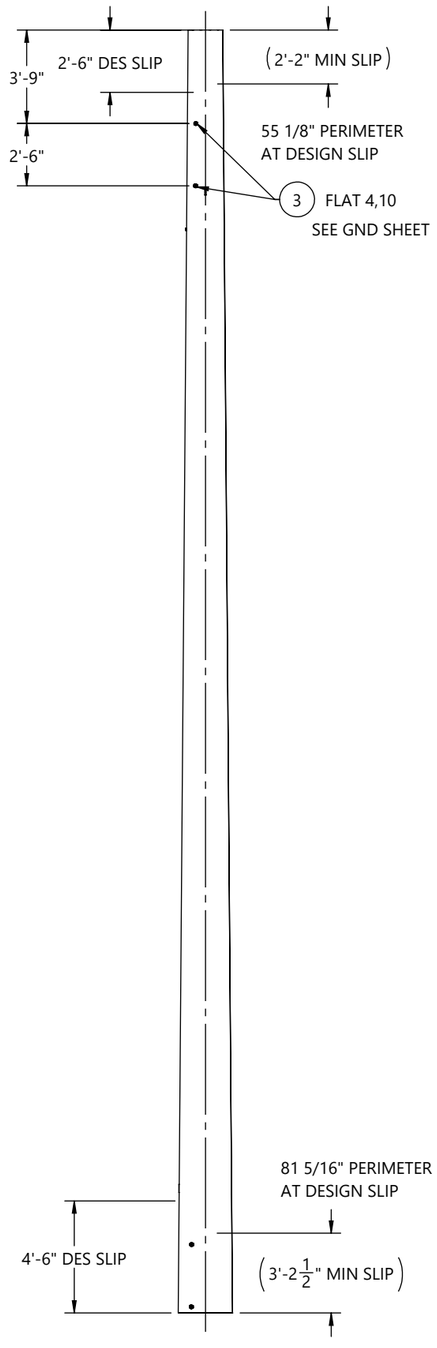

SIDE VIEW
(LOOKING @ 270° REF
ORIENTATION DETAIL)

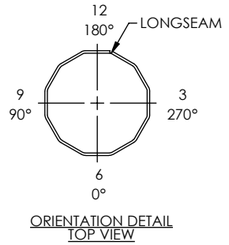

ORIENTATION DETAIL
TOP VIEW

GREENVILLE UTILITIES STEEL STRUCTURES- NC
STR#: 57, S07_4 - 95'-0"
SEC WT: 3165 LBS
DOM: [mm/YYYY]
CHM-12899-01400
12899-01400-MID

ID TAG

TEXT TO BE 7/16" LETTERS
TAGS TO BE ORIENTED ON 0° FLAT
WEIGHT ON ID TAG IS FINISHED GALV. WEIGHT

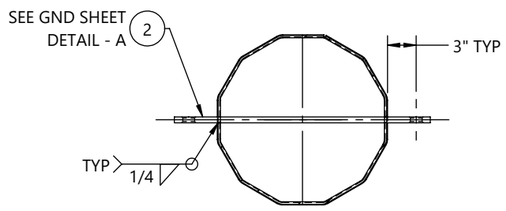

SECTION A-A

BY	DATE
DRAWN: KR	07/17/2026
CHK'D: EV	07/17/2026

REV.	ECR #	DESCRIPTION	APPROVED BY	DATE
1		SUBMITTAL FOR APPROVAL	EV	07/17/2026

REVISIONS

CHM INDUSTRIES
700 E. McLEROY BLVD
SAGINAW, TEXAS 76179
682.286.0046 PH
682.286.0086 FX
CHMINDUSTRIES.COM

(SEE CHM IND., INC. PROCEDURE CHM-PR-1.7.3-F1 FOR STANDARD TOLERANCES)

QTY: 1 | GLM: (FT-K) 681.01 | JOB NO. 12899 | PART NO. 12899-01400-MID | DWG NO. 12899-01400

CUST NAME: GREENVILLE UTILITIES STEEL STRUCTURES- NC
STR #: 57 TYPE/CLASS-HEIGHT: S07_4 - 95'-0"
DESCRIPTION: MIDDLE SECTION, 26.16" X 16.74" X 1/4" X 51'-6"

SCALE: NTS DO NOT SCALE DRAWING
REV. 1 | SHEET: 3 of 6

THIS DWG IS PROPERTY OF CHM INDUSTRIES AND CONTAINS PROPRIETARY INFORMATION WHICH MAY NOT BE COPIED OR REPRODUCED WITHOUT PRIOR WRITTEN CONSENT FROM CHM INDUSTRIES.

FINISH:	BLACK WEIGHT	GALVANIZED WEIGHT
GALVANIZED	1528 LBS	1620 LBS
WEIGHTS ABOVE INCLUDE ALL BOM ITEMS		

SEE GENERAL NOTES AND DETAILS SHEET FOR SUPPLEMENTARY INFORMATION

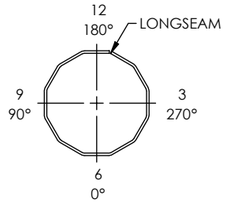

ORIENTATION DETAIL
TOP VIEW

ITEM #	PART #	DESCRIPTION	MAT'L	QTY.
1	12899-01400-SHT	SHAFT, 12S, 17.82" X 10.50" X 1/4" X 40'-0"	A572 GR65	1
2	12899-01400-TS	TOP STRAP, 9 7/8" X 2" X 3/16"	A572 GR65	1
3	12899-01400-CP	COVER PLATE, Ø11 7/8" X 3/16"	A572 GR65	1
4	12899-00400-VS201	VANG, OBROUND, 2-SIDED, 19 9/16" X 3" X 5/8"	A572 GR65	1
5	42120	BOLT, 1/2-13 X 1-3/4", HDG, HH, A307 A	A307-A	1
6	44018	WASHER, FLAT, 1/2", HDG, F436 T1	F436-T1	1
7	43010	NUT, HEAVY HEX, 1/2-13, HDG, A563 DH	A563-DH	1
8	43026	NUT, HEAVY HEX, 1-8, A563 DH3	A563-DH3	4
9	43029	NUT, HEX, 1/2-13, BLK, A563 DH	A563-DH	1
10	B22011	4X4 ID TAG, A588	A588	1

GREENVILLE UTILITIES STEEL STRUCTURES- NC
STR#: 57, S07_4 - 95'-0"
SEC WT: 1620 LBS
DOM: [mm/YYYY]
CHM-12899-01400
12899-01400-TOP

ID TAG

TEXT TO BE 7/16" LETTERS
TAGS TO BE ORIENTED ON 0° FLAT
WEIGHT ON ID TAG IS FINISHED GALV. WEIGHT

HOLE CHART		
HOLE SIZE (INCH)	DISTANCE FROM TOP OF SHAFT	FLAT(S)
13/16"	8' - 0"	3, 9
13/16"	9' - 0"	3, 9
13/16"	14' - 0"	3, 9
13/16"	15' - 0"	3, 9
13/16"	20' - 0"	3, 9
13/16"	21' - 0"	3, 9
11/16"	29' - 0"	6,12
11/16"	30' - 0"	6,12
11/16"	33' - 0"	6,12
11/16"	34' - 0"	6,12
11/16"	37' - 0"	6,12
11/16"	38' - 0"	6,12

CUSTOMER PLEASE VERIFY HOLES AT 37'-0"& 38'-0" ELEVATION ARE FALLING IN SLIP JOINT. PLEASE SUGGEST

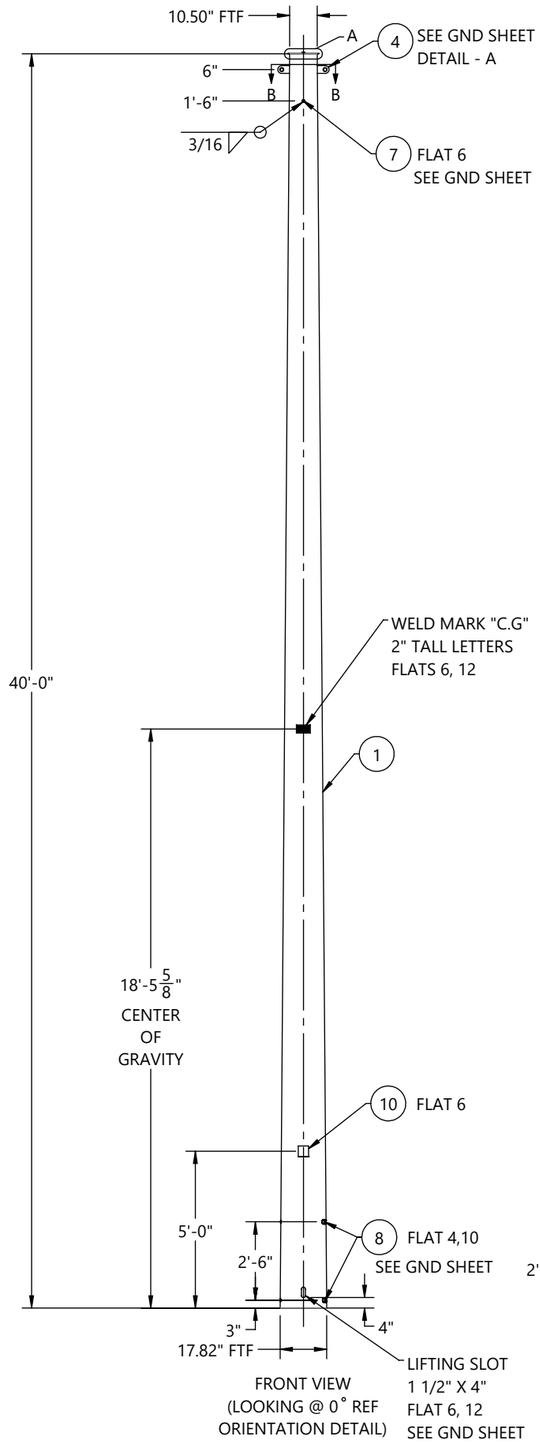

FRONT VIEW
(LOOKING @ 0° REF ORIENTATION DETAIL)

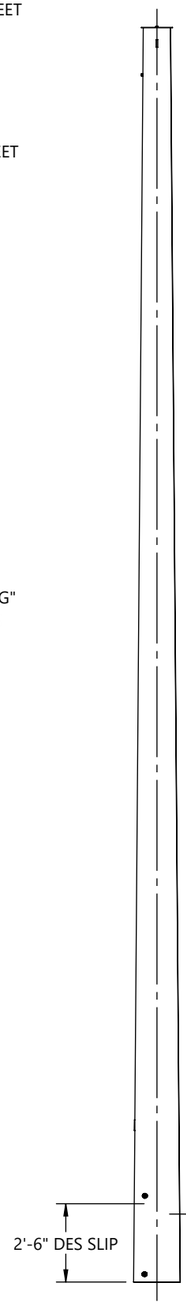

SIDE VIEW
(LOOKING @ 270° REF ORIENTATION DETAIL)

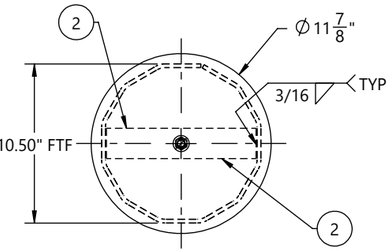

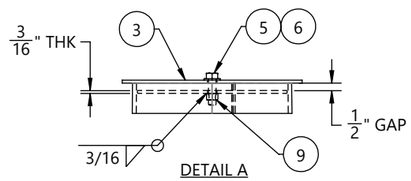

DETAIL A

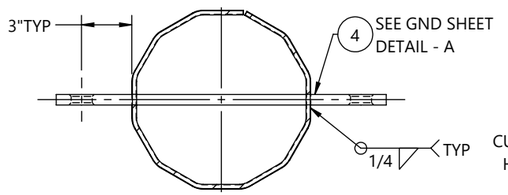

SECTION B-B

REV.	ECR #	DESCRIPTION	APPROVED BY	DATE
1		SUBMITTAL FOR APPROVAL	EV	07/17/2026

REVISIONS

BY		DATE
DRAWN:	KR	07/17/2026
CHK'D:	EV	07/17/2026

CHM INDUSTRIES
700 E. McLEROY BLVD
SAGINAW, TEXAS 76179
682.286.0046 PH
682.286.0086 FX
CHMINDUSTRIES.COM

(SEE CHM IND., INC. PROCEDURE CHM-PR-1.7.3-F1 FOR STANDARD TOLERANCES)

QTY: 1 | GLM: (FT-K) 681.01 | JOB NO. 12899 | PART NO. 12899-01400-TOP | DWG NO. 12899-01400

CUST NAME: GREENVILLE UTILITIES STEEL STRUCTURES- NC
STR #: 57 TYPE/CLASS-HEIGHT: S07_4 - 95'-0"
DESCRIPTION: TOP SECTION, 17.82" X 10.50" X 1/4" X 40'-0"

SCALE: NTS DO NOT SCALE DRAWING
REV.: 1 SHEET: 4 of 6

THIS DWG IS PROPERTY OF CHM INDUSTRIES AND CONTAINS PROPRIETARY INFORMATION WHICH MAY NOT BE COPIED OR REPRODUCED WITHOUT PRIOR WRITTEN CONSENT FROM CHM INDUSTRIES.

SEE GENERAL NOTES AND DETAILS SHEET FOR SUPPLEMENTARY INFORMATION

INDIVIDUAL STRUCTURE BILL OF MATERIALS			
ITEM NO.	PART NUMBER	DESCRIPTION	QTY.
1	12899-01400-BOT	BOTTOM SECTION, 26.27" X 24.71" X 5/16" X 8'-6"	1
1.1	12899-01400-SHB	SHAFT, 12S, 26.27" X 24.71" X 5/16" X 8'-6"	1
1.2	43026	NUT, HEAVY HEX, 1-8, A563 DH3	4
1.3	B22011	4X4 ID TAG, A588	1
1.4	12899-01400-CAS-MN	STRUCTURE, 26.27" X 26.27" X 24'-6"	1
1.4.1	12899-01400-CAS-SNG	SINGLE SECTION, 26.27" X 26.27" X 5/16" X 24'-6"	1
1.4.1.1	12899-01400-CAS-SHS	SHAFT, 12S, 26.27" X 26.27" X 5/16" X 24'-6"	1
1.4.1.2	12899-01400-CAS-SHG	GND SLV HALF, 12S, 26.65" X 26.65" X 3/16" X 4'-0"	2
1.4.1.3	12899-01400-PLT	SPLICE PLATE, Ø33 1/4" X 1"	1
1.4.2	43010	NUT, HEAVY HEX, 1/2-13, HDG, A563 DH	1
1.5	12899-01400-EAR	DRIVING EAR 1'-0" X 1'-1" x 1"	2
2	12899-01400-MID	MIDDLE SECTION, 26.16" X 16.74" X 1/4" X 51'-6"	1
2.1	12899-01400-SHM	SHAFT, 12S, 26.16" X 16.74" X 1/4" X 51'-6"	1
2.2	43026	NUT, HEAVY HEX, 1-8, A563 DH3	8
2.3	12899-00400-VS202	VANG, OBROUND, 2-SIDED, 27" X 3" X 5/8"	1
2.4	43010	NUT, HEAVY HEX, 1/2-13, HDG, A563 DH	1
2.5	B22011	4X4 ID TAG, A588	1
3	12899-01400-TOP	TOP SECTION, 17.82" X 10.50" X 1/4" X 40'-0"	1
3.1	12899-01400-SHT	SHAFT, 12S, 17.82" X 10.50" X 1/4" X 40'-0"	1
3.2	12899-01400-TS	TOP STRAP, 9 7/8" X 2" X 3/16"	1
3.3	12899-00400-VS201	VANG, OBROUND, 2-SIDED, 19 9/16" X 3" X 5/8"	1
3.4	43026	NUT, HEAVY HEX, 1-8, A563 DH3	4
3.5	43010	NUT, HEAVY HEX, 1/2-13, HDG, A563 DH	1
3.6	43029	NUT, HEX, 1/2-13, BLK, A563 DH	1
3.7	12899-01400-CP	COVER PLATE, Ø11 7/8" X 3/16"	1
3.8	44018	WASHER, FLAT, 1/2", HDG, F436 T1	1
3.9	42120	BOLT, 1/2-13 X 1-3/4", HDG, HH, A307 A	1
3.10	B22011	4X4 ID TAG, A588	1

BY		DATE
DRAWN:	KR	07/17/2026
CHK'D:	EV	07/17/2026

CHM INDUSTRIES
700 E. McLEROY BLVD
SAGINAW, TEXAS 76179
682.286.0046 PH
682.286.0086 FX
CHMINDUSTRIES.COM

(SEE CHM IND., INC. PROCEDURE CHM-PR-1.7.3-F1 FOR STANDARD TOLERANCES)

QTY: 1 | GLM: (FT-K) 681.01 | JOB NO. 12899 | PART NO. 12899-01400-SBOM | DWG NO. 12899-01400

CUST NAME: GREENVILLE UTILITIES STEEL STRUCTURES- NC

STR #: 57 TYPE/CLASS-HEIGHT: S07_4 - 95'-0"

DESCRIPTION: STRUCTURE, 26.27" X 10.50" X 93'-0"

SCALE: NTS DO NOT SCALE DRAWING

REV.: 1 SHEET: 5 of 6

THIS DWG IS PROPERTY OF CHM INDUSTRIES AND CONTAINS PROPRIETARY INFORMATION WHICH MAY NOT BE COPIED OR REPRODUCED WITHOUT PRIOR WRITTEN CONSENT FROM CHM INDUSTRIES.

SEE GENERAL NOTES AND DETAILS SHEET FOR SUPPLEMENTARY INFORMATION

TOTAL JOB MATERIAL REQUIREMENTS				
ITEM NO.	PART NUMBER	DESCRIPTION	QTY.	JOB QTY.
1	42120	BOLT, 1/2-13 X 1-3/4", HDG, HH, A307 A	1	1
2	43026	NUT, HEAVY HEX, 1-8, A563 DH3	16	16
3	43029	NUT, HEX, 1/2-13, BLK, A563 DH	1	1
4	44018	WASHER, FLAT, 1/2", HDG, F436 T1	1	1
5	12899-00400-VS201	VANG, OBROUND, 2-SIDED, 19 9/16" X 3" X 5/8"	1	1
6	12899-01400-CP	COVER PLATE, Ø11 7/8" X 3/16"	1	1
7	12899-01400-SHB	SHAFT, 12S, 26.27" X 24.71" X 5/16" X 8'-6"	1	1
8	12899-01400-SHM	SHAFT, 12S, 26.16" X 16.74" X 1/4" X 51'-6"	1	1
9	12899-01400-SHT	SHAFT, 12S, 17.82" X 10.50" X 1/4" X 40'-0"	1	1
10	12899-01400-TS	TOP STRAP, 9 7/8" X 2" X 3/16"	1	1
11	12899-00400-VS202	VANG, OBROUND, 2-SIDED, 27" X 3" X 5/8"	1	1
12	43010	NUT, HEAVY HEX, 1/2-13, HDG, A563 DH	3	3
13	B22011	4X4 ID TAG, A588	3	3
14	12899-01400-CAS-SHS	SHAFT, 12S, 26.27" X 26.27" X 5/16" X 24'-6"	1	1
15	12899-01400-CAS-SHG	GND SLV HALF, 12S, 26.65" X 26.65" X 3/16" X 4'-0"	2	2
16	12899-01400-PLT	SPLICE PLATE, Ø33 1/4" X 1"	1	1
17	12899-01400-EAR	DRIVING EAR 1'-0" X 1'-1" x 1"	2	2

BY		DATE
DRAWN:	KR	07/17/2026
CHK'D:	EV	07/17/2026

CHM INDUSTRIES
700 E. McLEROY BLVD
SAGINAW, TEXAS 76179
682.286.0046 PH
682.286.0086 FX
CHMINDUSTRIES.COM

(SEE CHM IND., INC. PROCEDURE CHM-PR-1.7.3-F1 FOR STANDARD TOLERANCES)

QTY: 1 | GLM: (FT-K) 681.01 | JOB NO. 12899 | PART NO. 12899-01400-PBOM | DWG NO. 12899-01400

CUST NAME: GREENVILLE UTILITIES STEEL STRUCTURES- NC
STR #: 57 TYPE/CLASS-HEIGHT: S07_4 - 95'-0"
DESCRIPTION: STRUCTURE, 26.27" X 10.50" X 93'-0"

SCALE: NTS DO NOT SCALE DRAWING | REV: 1 | SHEET: 6 of 6

THIS DWG IS PROPERTY OF CHM INDUSTRIES AND CONTAINS PROPRIETARY INFORMATION WHICH MAY NOT BE COPIED OR REPRODUCED WITHOUT PRIOR WRITTEN CONSENT FROM CHM INDUSTRIES.

FINISH:	BLACK WEIGHT	GALVANIZED WEIGHT
GALVANIZED	7681 LBS	8142 LBS
WEIGHTS ABOVE INCLUDE ALL BOM ITEMS		

SEE GENERAL NOTES AND DETAILS SHEET FOR SUPPLEMENTARY INFORMATION

ITEM #	PART #	DESCRIPTION	QTY.
1	12899-01500-BOT	BOTTOM SECTION, 26.61" X 24.89" X 5/16" X 8'-6"	1
2	12899-01500-MID	MIDDLE SECTION, 26.43" X 16.94" X 1/4" X 46'-9"	1
3	12899-01500-TOP	TOP SECTION, 18.12" X 10.00" X 1/4" X 40'-0"	1

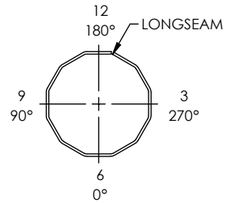

ORIENTATION DETAIL
TOP VIEW

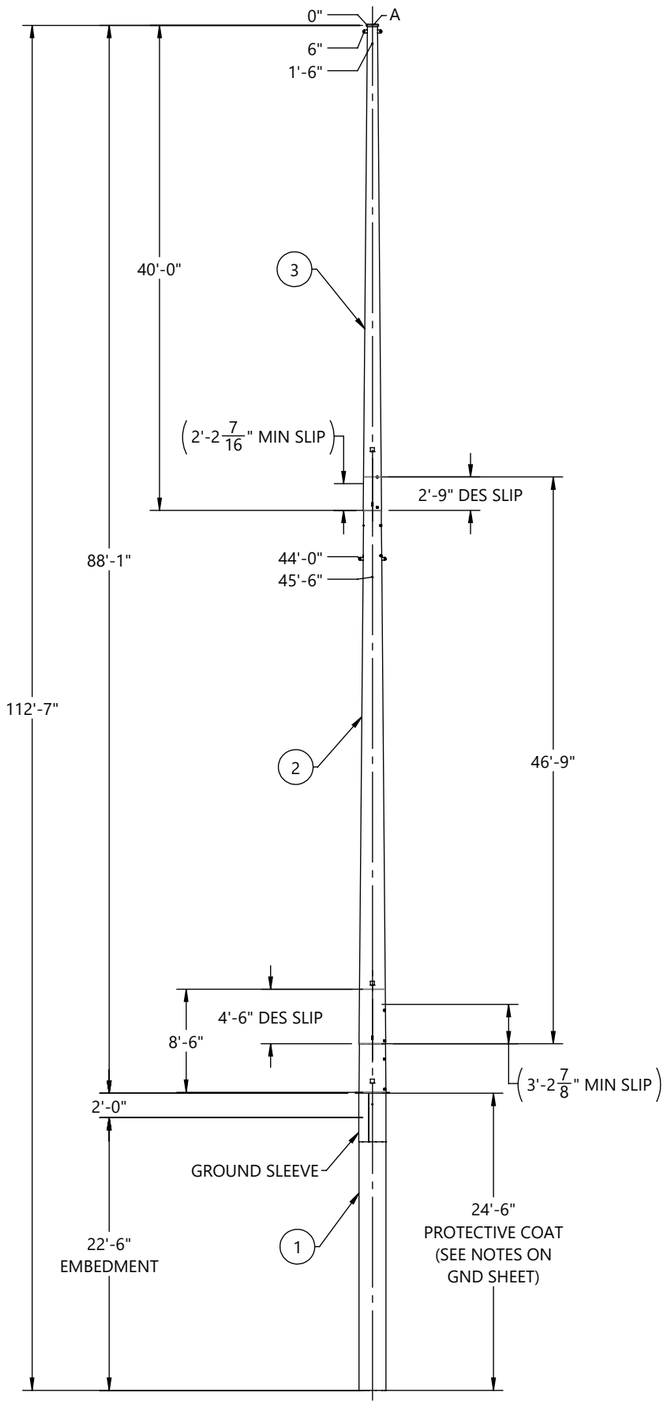

FRONT VIEW
(LOOKING @ 0° REF
ORIENTATION DETAIL)

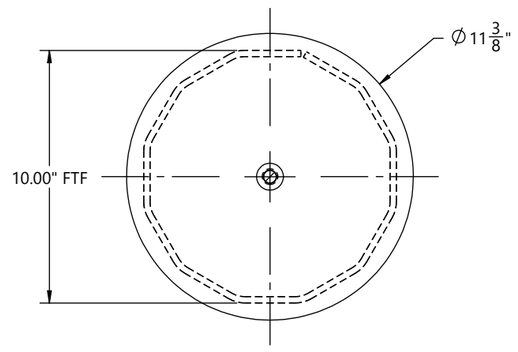

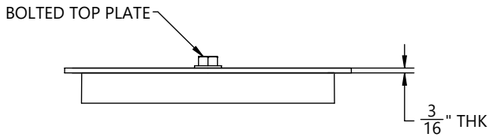

DETAIL A

HOLE CHART		
HOLE SIZE (INCH)	DISTANCE FROM TOP OF SHAFT	FLAT(S)
13/16"	8' - 0"	3, 9
13/16"	9' - 0"	3, 9
13/16"	14' - 0"	3, 9
13/16"	15' - 0"	3, 9
13/16"	20' - 0"	3, 9
13/16"	21' - 0"	3, 9
11/16"	29' - 0"	6, 12
11/16"	30' - 0"	6, 12
11/16"	33' - 0"	6, 12
11/16"	34' - 0"	6, 12
11/16"	37' - 0"	6, 12
11/16"	38' - 0"	6, 12

CUSTOMER PLEASE VERIFY
HOLES AT 37'-0" & 38'-0"
ELEVATIONS ARE FALLING
IN BETWEEN SLIP JOINT.
PLEASE SUGGEST.

BY		DATE
DRAWN:	KR	07/01/2026
CHK'D:	EV	07/01/2026

REV.	ECR #	DESCRIPTION	APPROVED BY	DATE
1		SUBMITTAL FOR APPROVAL	EV	07/20/2026

REVISIONS

CHM INDUSTRIES
700 E. McLEROY BLVD
SAGINAW, TEXAS 76179
682.286.0046 PH
682.286.0086 FX
CHMINDUSTRIES.COM

(SEE CHM IND., INC. PROCEDURE CHM-PR-1.7.3-F1 FOR STANDARD TOLERANCES)

QTY: 1 | GLM: (FT-K) 693.08 | JOB NO. 12899 | PART NO. 12899-01500-MN | DWG NO. 12899-01500

CUST NAME: GREENVILLE UTILITIES STEEL STRUCTURES- NC
STR #: 58 TYPE/CLASS-HEIGHT: 07-4 H6 - 90
DESCRIPTION: STRUCTURE, 26.61" X 10.00" X 88'-0"

SCALE: NTS DO NOT SCALE DRAWING
REV. 1 SHEET: 1 of 6

THIS DWG IS PROPERTY OF CHM INDUSTRIES AND CONTAINS PROPRIETARY INFORMATION WHICH MAY NOT BE COPIED OR REPRODUCED WITHOUT PRIOR WRITTEN CONSENT FROM CHM INDUSTRIES.

FINISH:	BLACK WEIGHT	GALVANIZED WEIGHT
GALVANIZED	3417 LBS	3622 LBS
WEIGHTS ABOVE INCLUDE ALL BOM ITEMS		

SEE GENERAL NOTES AND DETAILS SHEET FOR SUPPLEMENTARY INFORMATION

ITEM #	PART #	DESCRIPTION	MAT'L	QTY.
1	12899-01500-SHB	SHAFT, 12S, 26.61" X 24.89" X 5/16" X 8'-6"	A572 GR65	1
2	12899-01500-CAS-SHS	SHAFT, 12S, 26.61" X 26.61" X 5/16" X 24'-6"	A572 GR65	1
3	12899-01500-CAS-SHG	GND SLV HALF, 12S, 26.99" X 26.99" X 3/16" X 4'-0"	A572 GR65	2
4	12899-01500-PLT	SPLICE PLATE, Ø33 5/8" X 1"	A572 GR65	1
5	12899-01500-EAR	DRIVING EAR, 1'-0" X 1'-1" X 1"	A572 GR65	2
6	B22011	4X4 ID TAG, A588	A588	1
7	43010	NUT, HEAVY HEX, 1/2-13, HDG, A563 DH	A563-DH	1
8	43026	NUT, HEAVY HEX, 1-8, A563 DH3	A563-DH3	4

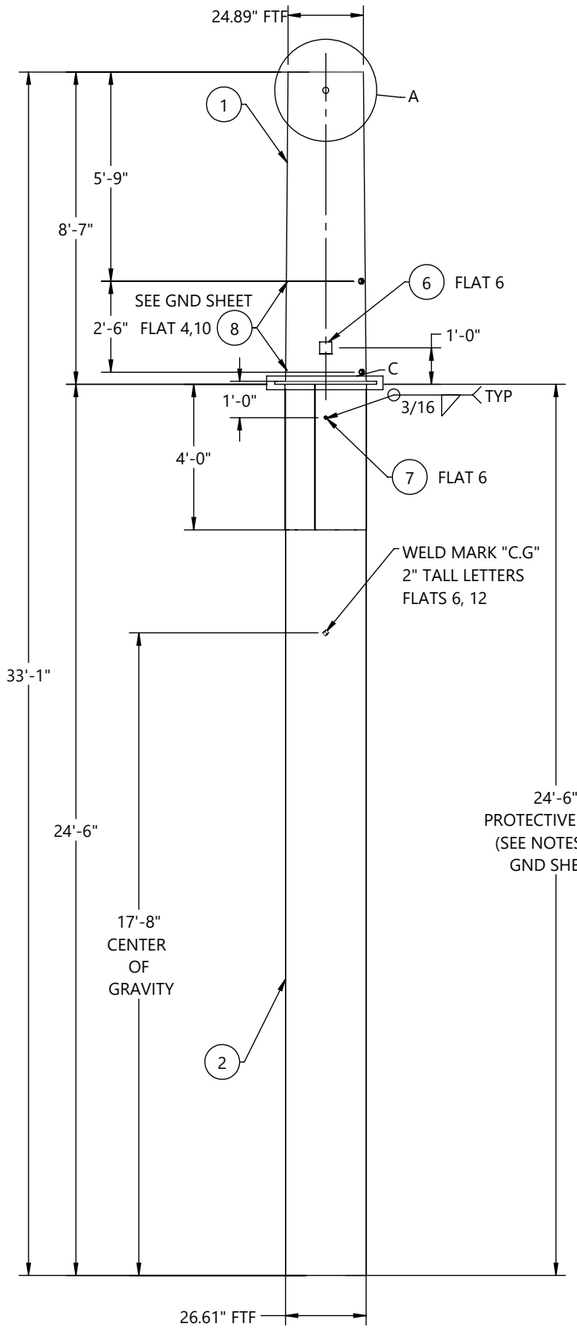

FRONT VIEW
(LOOKING @ 0° REF
ORIENTATION DETAIL)

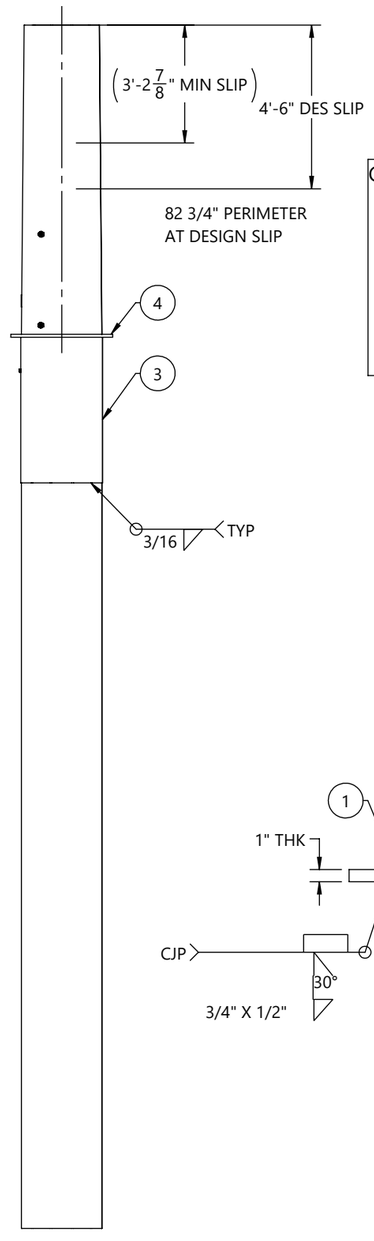

SIDE VIEW
(LOOKING @ 270° REF
ORIENTATION DETAIL)

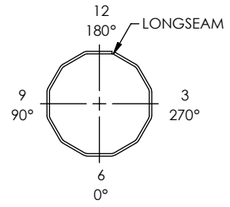

ORIENTATION DETAIL
TOP VIEW

GREENVILLE UTILITIES STEEL STRUCTURES- NC
STR#: 58, 07-4 H6 - 90
GLM: 693.08 FT-K
STR WT: 8142 LBS
SEC WT: 3622 LBS
DOM: [mm/YYYY]
CHM-12899-01500
12899-01500-BOT

ID TAG

TEXT TO BE 7/16" LETTERS
TAGS TO BE ORIENTED ON 0° FLAT
WEIGHT ON ID TAG IS FINISHED GALV. WEIGHT

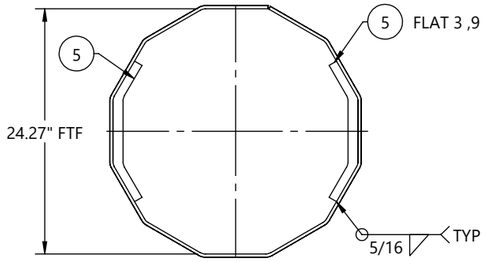

SECTION B-B

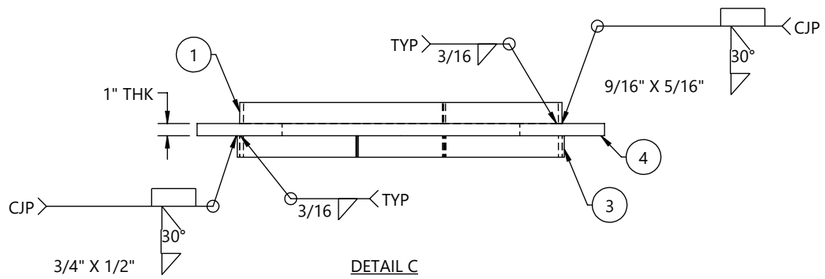

DETAIL C

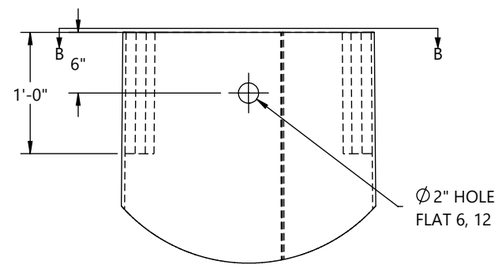

DETAIL A

REV.	ECR #	DESCRIPTION	APPROVED BY	DATE
1		SUBMITTAL FOR APPROVAL	EV	07/20/2026

REVISIONS

BY	DATE
DRAWN: KR	07/01/2026
CHK'D: EV	07/01/2026

CHM INDUSTRIES
700 E. McLEROY BLVD
SAGINAW, TEXAS 76179
682.286.0046 PH
682.286.0086 FX
CHMINDUSTRIES.COM

(SEE CHM IND., INC. PROCEDURE CHM-PR-1.7.3-F1 FOR STANDARD TOLERANCES)

QTY: 1	GLM: (FT-K) 693.08	JOB NO. 12899	PART NO. 12899-01500-BOT	DWG NO. 12899-01500

CUST NAME: GREENVILLE UTILITIES STEEL STRUCTURES- NC
STR #: 58 TYPE/CLASS-HEIGHT: 07-4 H6 - 90
DESCRIPTION: BOTTOM SECTION, 26.61" X 24.89" X 5/16" X 8'-6"

SCALE: NTS DO NOT SCALE DRAWING
REV. 1 SHEET: 2 of 6

THIS DWG IS PROPERTY OF CHM INDUSTRIES AND CONTAINS PROPRIETARY INFORMATION WHICH MAY NOT BE COPIED OR REPRODUCED WITHOUT PRIOR WRITTEN CONSENT FROM CHM INDUSTRIES.

FINISH:	BLACK WEIGHT	GALVANIZED WEIGHT
GALVANIZED	2745 LBS	2910 LBS
WEIGHTS ABOVE INCLUDE ALL BOM ITEMS		

SEE GENERAL NOTES AND DETAILS SHEET FOR SUPPLEMENTARY INFORMATION

ITEM #	PART #	DESCRIPTION	MAT'L	QTY.
1	12899-01500-SHM	SHAFT, 12S, 26.43" X 16.94" X 1/4" X 46'-9"	A572 GR65	1
2	12899-01500-VS202	VANG, OBROUND, 2-SIDED, 27 7/16" X 3" X 5/8"	A572 GR65	1
3	43026	NUT, HEAVY HEX, 1-8, A563 DH3	A563-DH3	8
4	43010	NUT, HEAVY HEX, 1/2-13, HDG, A563 DH	A563-DH	1
5	B22011	4X4 ID TAG, A588	A588	1

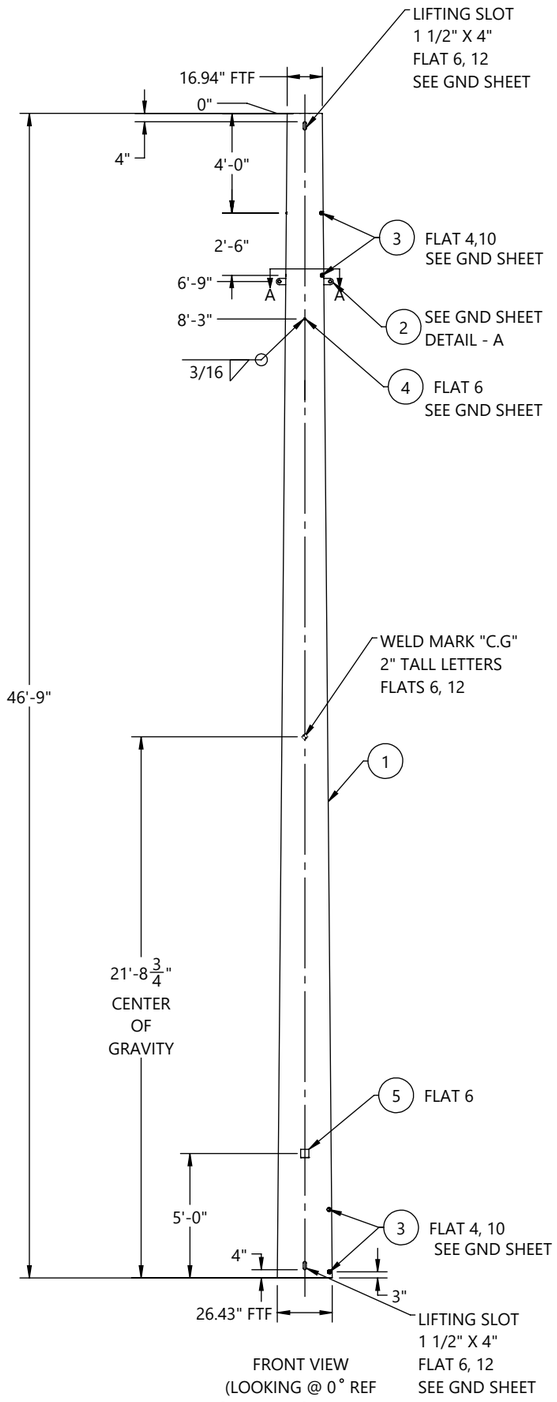

FRONT VIEW
(LOOKING @ 0° REF
ORIENTATION DETAIL)

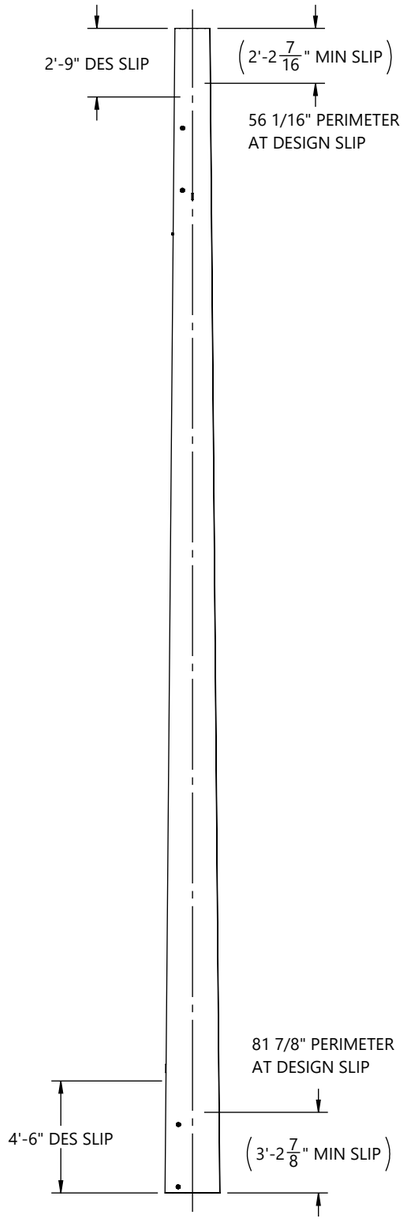

SIDE VIEW
(LOOKING @ 270° REF
ORIENTATION DETAIL)

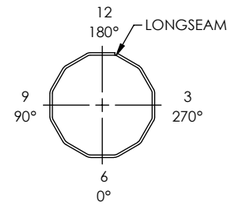

ORIENTATION DETAIL
TOP VIEW

GREENVILLE UTILITIES STEEL STRUCTURES- NC
STR#: 58, 07-4 H6 - 90
SEC WT: 2910 LBS
DOM: [mm/YYYY]
CHM-12899-01500
12899-01500-MID

ID TAG

TEXT TO BE 7/16" LETTERS
TAGS TO BE ORIENTED ON 0° FLAT
WEIGHT ON ID TAG IS FINISHED GALV. WEIGHT

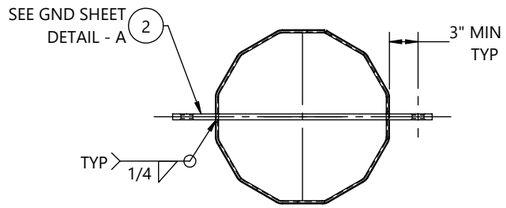

SECTION A-A

BY		DATE
DRAWN:	KR	07/01/2026
CHK'D:	EV	07/01/2026

(SEE CHM IND., INC. PROCEDURE CHM-PR-1.7.3-F1 FOR STANDARD TOLERANCES)

REV.	ECR #	DESCRIPTION	APPROVED BY	DATE
1		SUBMITTAL FOR APPROVAL	EV	07/20/2026

REVISIONS

CHM INDUSTRIES
700 E. McLEROY BLVD
SAGINAW, TEXAS 76179
682.286.0046 PH
682.286.0086 FX
CHMINDUSTRIES.COM

QTY:	GLM: (FT-K)	JOB NO.	PART NO.	DWG NO.
1	693.08	12899	12899-01500-MID	12899-01500

CUST NAME: GREENVILLE UTILITIES STEEL STRUCTURES- NC
STR #: 58 TYPE/CLASS-HEIGHT: 07-4 H6 - 90
DESCRIPTION: MIDDLE SECTION, 26.43" X 16.94" X 1/4" X 46'-9"

SCALE: NTS
DO NOT SCALE DRAWING
REV.: 1
SHEET: 3 of 6

THIS DWG IS PROPERTY OF CHM INDUSTRIES AND CONTAINS PROPRIETARY INFORMATION WHICH MAY NOT BE COPIED OR REPRODUCED WITHOUT PRIOR WRITTEN CONSENT FROM CHM INDUSTRIES.

FINISH:	BLACK WEIGHT	GALVANIZED WEIGHT
GALVANIZED	1518 LBS	1609 LBS
WEIGHTS ABOVE INCLUDE ALL BOM ITEMS		

SEE GENERAL NOTES AND DETAILS SHEET FOR SUPPLEMENTARY INFORMATION

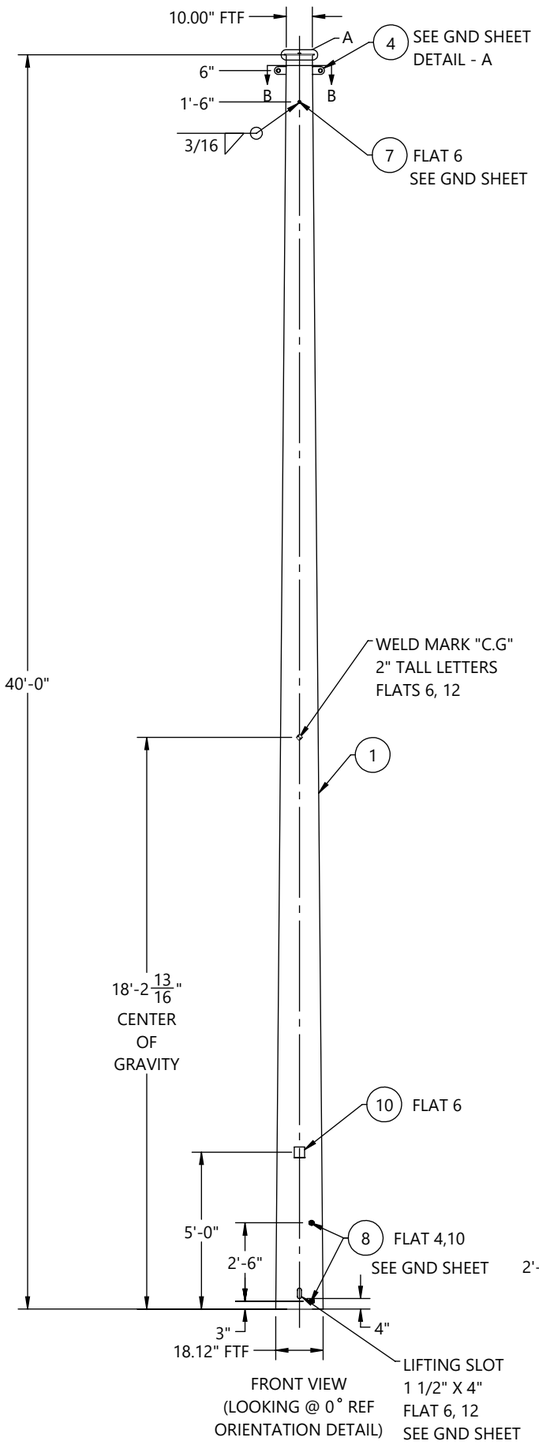

FRONT VIEW
(LOOKING @ 0° REF
ORIENTATION DETAIL)

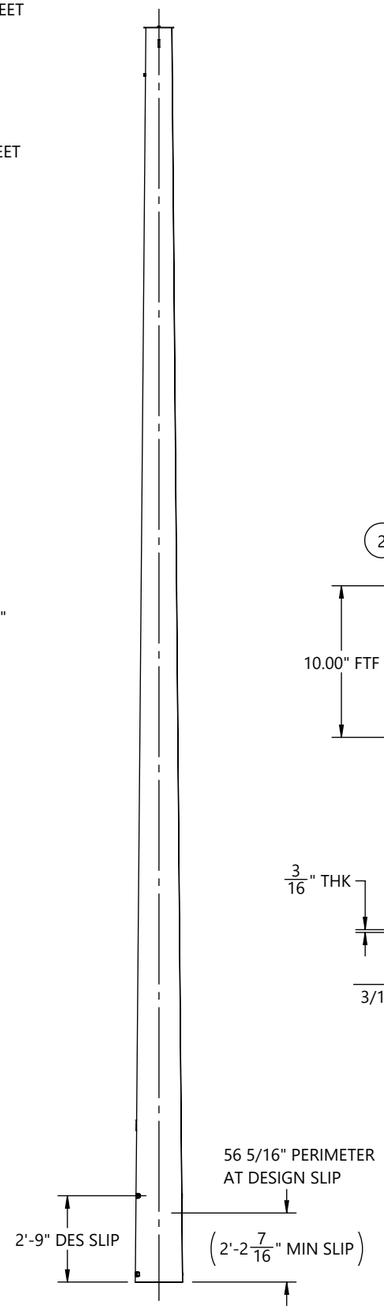

SIDE VIEW
(LOOKING @ 270° REF
ORIENTATION DETAIL)

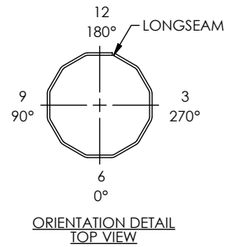

ORIENTATION DETAIL
TOP VIEW

ITEM #	PART #	DESCRIPTION	MAT'L	QTY.
1	12899-01500-SHT	SHAFT, 12S, 18.12" X 10.00" X 1/4" X 40'-0"	A572 GR65	1
2	12899-01500-TS	TOP STRAP, 9 7/8" X 2" X 3/16"	A572 GR65	1
3	12899-01500-CP	COVER PLATE, Ø11 3/8" X 3/16"	A572 GR65	1
4	12899-01500-VS201	VANG, OBROUND, 2-SIDED, 19 1/8" X 3" X 5/8"	A572 GR65	1
5	42120	BOLT, 1/2-13 X 1-3/4", HDG, HH, A307 A	A307-A	1
6	44018	WASHER, FLAT, 1/2", HDG, F436 T1	F436-T1	1
7	43010	NUT, HEAVY HEX, 1/2-13, HDG, A563 DH	A563-DH	1
8	43026	NUT, HEAVY HEX, 1-8, A563 DH3	A563-DH3	4
9	43029	NUT, HEX, 1/2-13, BLK, A563 DH	A563-DH	1
10	B22011	4X4 ID TAG, A588	A588	1

GREENVILLE UTILITIES STEEL STRUCTURES- NC
STR#: 58, 07-4 H6 - 90
SEC WT: 1609 LBS
DOM: [mm/YYYY]
CHM-12899-01500
12899-01500-TOP

ID TAG

TEXT TO BE 7/16" LETTERS
TAGS TO BE ORIENTED ON 0° FLAT
WEIGHT ON ID TAG IS FINISHED GALV. WEIGHT

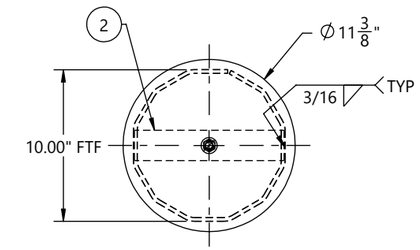

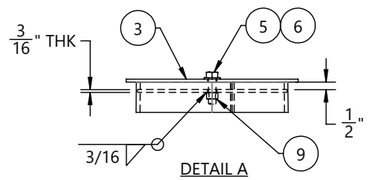

DETAIL A

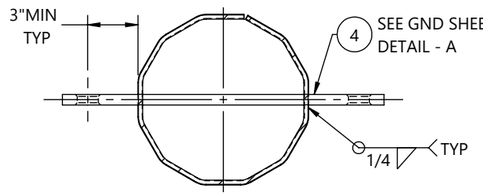

SECTION B-B

HOLE CHART		
HOLE SIZE (INCH)	DISTANCE FROM TOP OF SHAFT	FLAT(S)
13/16"	8' - 0"	3, 9
13/16"	9' - 0"	3, 9
13/16"	14' - 0"	3, 9
13/16"	15' - 0"	3, 9
13/16"	20' - 0"	3, 9
13/16"	21' - 0"	3, 9
11/16"	29' - 0"	6,12
11/16"	30' - 0"	6,12
11/16"	33' - 0"	6,12
11/16"	34' - 0"	6,12
11/16"	37' - 0"	6,12
11/16"	38' - 0"	6,12

CUSTOMER PLEASE VERIFY
HOLES AT 37'-0" & 38'-0"
ELEVATIONS ARE FALLING
IN BETWEEN SLIP JOINT.
PLEASE SUGGEST.

BY		DATE
DRAWN:	KR	07/01/2026
CHK'D:	EV	07/01/2026

REV.	ECR #	DESCRIPTION	APPROVED BY	DATE
1		SUBMITTAL FOR APPROVAL	EV	07/20/2026

REVISIONS

CHM INDUSTRIES
700 E. McLEROY BLVD
SAGINAW, TEXAS 76179
682.286.0046 PH
682.286.0086 FX
CHMINDUSTRIES.COM
(SEE CHM IND., INC. PROCEDURE CHM-PR-1.7.3-F1 FOR STANDARD TOLERANCES)

QTY: 1 | GLM: (FT-K) 693.08 | JOB NO. 12899 | PART NO. 12899-01500-TOP | DWG NO. 12899-01500

CUST NAME: GREENVILLE UTILITIES STEEL STRUCTURES- NC
STR #: 58 TYPE/CLASS-HEIGHT: 07-4 H6 - 90
DESCRIPTION: TOP SECTION, 18.12" X 10.00" X 1/4" X 40'-0"

SCALE: NTS DO NOT SCALE DRAWING
REV. 1 | SHEET: 4 of 6

THIS DWG IS PROPERTY OF CHM INDUSTRIES AND CONTAINS PROPRIETARY INFORMATION WHICH MAY NOT BE COPIED OR REPRODUCED WITHOUT PRIOR WRITTEN CONSENT FROM CHM INDUSTRIES.

SEE GENERAL NOTES AND DETAILS SHEET FOR SUPPLEMENTARY INFORMATION

INDIVIDUAL STRUCTURE BILL OF MATERIALS			
ITEM NO.	PART NUMBER	DESCRIPTION	QTY.
1	12899-01500-BOT	BOTTOM SECTION, 26.61" X 24.89" X 5/16" X 8'-6"	1
1.1	12899-01500-SHB	SHAFT, 12S, 26.61" X 24.89" X 5/16" X 8'-6"	1
1.2	43026	NUT, HEAVY HEX, 1-8, A563 DH3	4
1.3	B22011	4X4 ID TAG, A588	1
1.4	12899-01500-CAS-MN	STRUCTURE, 26.61" X 26.61" X 24'-6"	1
1.4.1	12899-01500-CAS-SNG	SINGLE SECTION, 26.61" X 26.61" X 5/16" X 24'-6"	1
1.4.1.1	12899-01500-CAS-SHS	SHAFT, 12S, 26.61" X 26.61" X 5/16" X 24'-6"	1
1.4.1.2	12899-01500-CAS-SHG	GND SLV HALF, 12S, 26.99" X 26.99" X 3/16" X 4'-0"	2
1.4.1.3	12899-01500-PLT	SPLICE PLATE, Ø33 5/8" X 1"	1
1.4.2	43010	NUT, HEAVY HEX, 1/2-13, HDG, A563 DH	1
1.5	12899-01500-EAR	DRIVING EAR, 1'-0" X 1'-1" X 1"	2
2	12899-01500-MID	MIDDLE SECTION, 26.43" X 16.94" X 1/4" X 46'-9"	1
2.1	12899-01500-SHM	SHAFT, 12S, 26.43" X 16.94" X 1/4" X 46'-9"	1
2.2	43026	NUT, HEAVY HEX, 1-8, A563 DH3	8
2.3	12899-01500-VS202	VANG, OBROUND, 2-SIDED, 27 7/16" X 3" X 5/8"	1
2.4	43010	NUT, HEAVY HEX, 1/2-13, HDG, A563 DH	1
2.5	B22011	4X4 ID TAG, A588	1
3	12899-01500-TOP	TOP SECTION, 18.12" X 10.00" X 1/4" X 40'-0"	1
3.1	12899-01500-SHT	SHAFT, 12S, 18.12" X 10.00" X 1/4" X 40'-0"	1
3.2	12899-01500-TS	TOP STRAP, 9 7/8" X 2" X 3/16"	1
3.3	12899-01500-VS201	VANG, OBROUND, 2-SIDED, 19 1/8" X 3" X 5/8"	1
3.4	43026	NUT, HEAVY HEX, 1-8, A563 DH3	4
3.5	43010	NUT, HEAVY HEX, 1/2-13, HDG, A563 DH	1
3.6	43029	NUT, HEX, 1/2-13, BLK, A563 DH	1
3.7	12899-01500-CP	COVER PLATE, Ø11 3/8" X 3/16"	1
3.8	44018	WASHER, FLAT, 1/2", HDG, F436 T1	1
3.9	42120	BOLT, 1/2-13 X 1-3/4", HDG, HH, A307 A	1
3.10	B22011	4X4 ID TAG, A588	1

BY		DATE
DRAWN:	KR	07/01/2026
CHK'D:	EV	07/01/2026

CHM INDUSTRIES
700 E. McLEROY BLVD
SAGINAW, TEXAS 76179
682.286.0046 PH
682.286.0086 FX
CHMINDUSTRIES.COM

(SEE CHM IND., INC. PROCEDURE CHM-PR-1.7.3-F1 FOR STANDARD TOLERANCES)

QTY: 1	GLM: (FT-K) 693.08	JOB NO. 12899	PART NO. 12899-01500-SBOM	DWG NO. 12899-01500

CUST NAME: GREENVILLE UTILITIES STEEL STRUCTURES- NC
STR #: 58 TYPE/CLASS-HEIGHT: 07-4 H6 - 90
DESCRIPTION: STRUCTURE, 26.61" X 10.00" X 88'-0"

SCALE: NTS DO NOT SCALE DRAWING
REV. 1
SHEET: 5 of 6

THIS DWG IS PROPERTY OF CHM INDUSTRIES AND CONTAINS PROPRIETARY INFORMATION WHICH MAY NOT BE COPIED OR REPRODUCED WITHOUT PRIOR WRITTEN CONSENT FROM CHM INDUSTRIES.

SEE GENERAL NOTES AND DETAILS SHEET FOR SUPPLEMENTARY INFORMATION

TOTAL JOB MATERIAL REQUIREMENTS				
ITEM NO.	PART NUMBER	DESCRIPTION	QTY.	JOB QTY.
1	42120	BOLT, 1/2-13 X 1-3/4", HDG, HH, A307 A	1	1
2	43026	NUT, HEAVY HEX, 1-8, A563 DH3	16	16
3	43029	NUT, HEX, 1/2-13, BLK, A563 DH	1	1
4	44018	WASHER, FLAT, 1/2", HDG, F436 T1	1	1
5	12899-01500-VS201	VANG, OBROUND, 2-SIDED, 19 1/8" X 3" X 5/8"	1	1
6	12899-01500-CP	COVER PLATE, Ø11 3/8" X 3/16"	1	1
7	12899-01500-SHB	SHAFT, 12S, 26.61" X 24.89" X 5/16" X 8'-6"	1	1
8	12899-01500-SHM	SHAFT, 12S, 26.43" X 16.94" X 1/4" X 46'-9"	1	1
9	12899-01500-SHT	SHAFT, 12S, 18.12" X 10.00" X 1/4" X 40'-0"	1	1
10	12899-01500-TS	TOP STRAP, 9 7/8" X 2" X 3/16"	1	1
11	12899-01500-VS202	VANG, OBROUND, 2-SIDED, 27 7/16" X 3" X 5/8"	1	1
12	43010	NUT, HEAVY HEX, 1/2-13, HDG, A563 DH	3	3
13	B22011	4X4 ID TAG, A588	3	3
14	12899-01500-CAS-SHS	SHAFT, 12S, 26.61" X 26.61" X 5/16" X 24'-6"	1	1
15	12899-01500-CAS-SHG	GND SLV HALF, 12S, 26.99" X 26.99" X 3/16" X 4'-0"	2	2
16	12899-01500-PLT	SPLICE PLATE, Ø33 5/8" X 1"	1	1
17	12899-01500-EAR	DRIVING EAR, 1'-0" X 1'-1" X 1"	2	2

BY		DATE
DRAWN:	KR	07/01/2026
CHK'D:	EV	07/01/2026

CHM INDUSTRIES
700 E. McLEROY BLVD
SAGINAW, TEXAS 76179
682.286.0046 PH
682.286.0086 FX
CHMINDUSTRIES.COM

(SEE CHM IND., INC. PROCEDURE CHM-PR-1.7.3-F1 FOR STANDARD TOLERANCES)

QTY: 1	GLM: (FT-K) 693.08	JOB NO. 12899	PART NO. 12899-01500-PBOM	DWG NO. 12899-01500

CUST NAME: GREENVILLE UTILITIES STEEL STRUCTURES- NC
STR #: 58 TYPE/CLASS-HEIGHT: 07-4 H6 - 90
DESCRIPTION: STRUCTURE, 26.61" X 10.00" X 88'-0"

SCALE: NTS DO NOT SCALE DRAWING
REV: 1 SHEET: 6 of 6

THIS DWG IS PROPERTY OF CHM INDUSTRIES AND CONTAINS PROPRIETARY INFORMATION WHICH MAY NOT BE COPIED OR REPRODUCED WITHOUT PRIOR WRITTEN CONSENT FROM CHM INDUSTRIES.

FINISH:	BLACK WEIGHT	GALVANIZED WEIGHT
GALVANIZED	10023 LBS	10624 LBS
WEIGHTS ABOVE INCLUDE ALL BOM ITEMS		

SEE GENERAL NOTES AND DETAILS SHEET FOR SUPPLEMENTARY INFORMATION

ITEM #	PART #	DESCRIPTION	QTY.
1	12899-01600-BOT	BOTTOM SECTION, 31.78" X 29.91" X 5/16" X 8'-6"	1
2	12899-01600-MID	MIDDLE SECTION, 31.65" X 24.45" X 5/16" X 32'-9"	1
3	12899-01600-TOP	TOP SECTION, 25.90" X 16.00" X 1/4" X 45'-0"	1

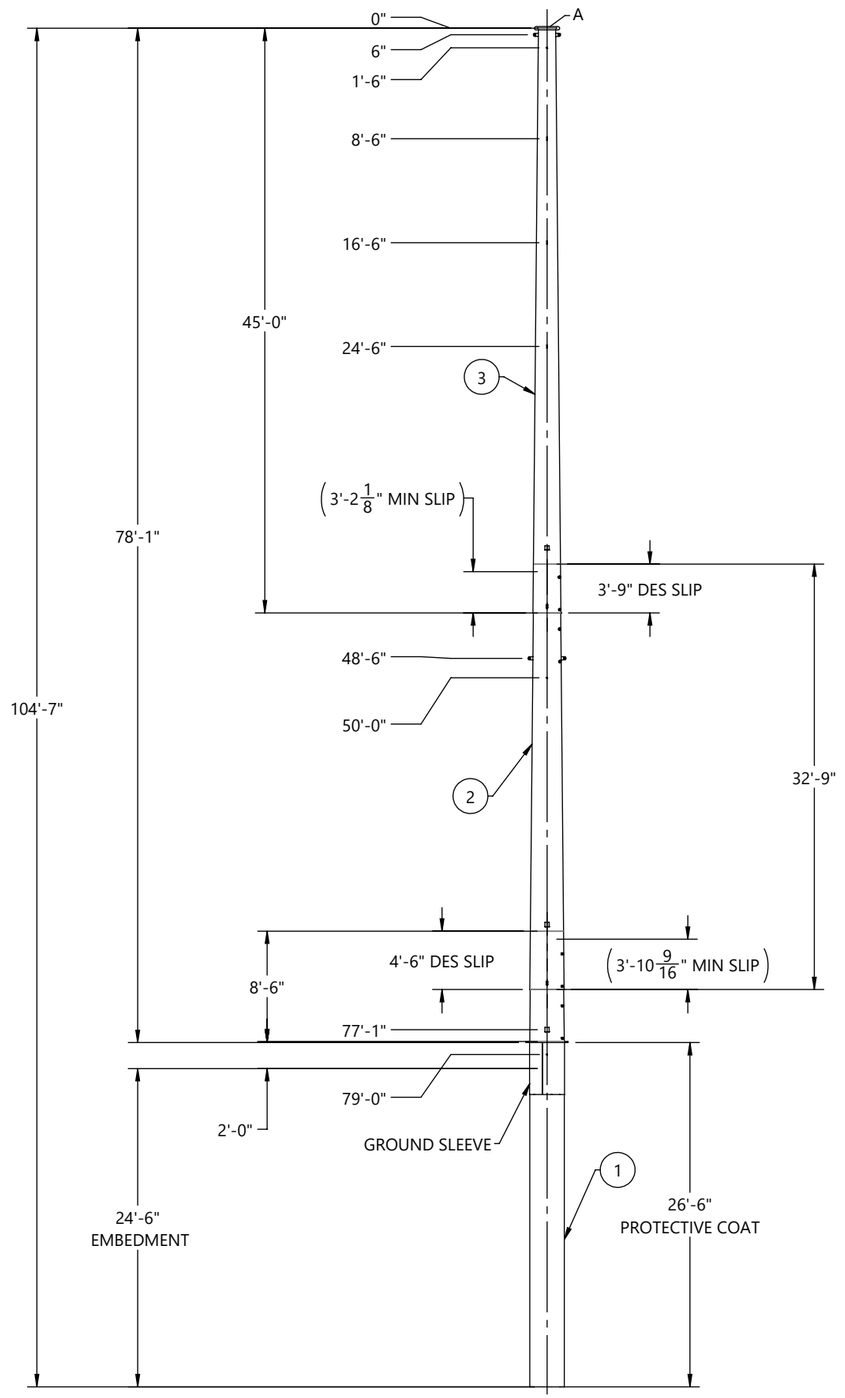

FRONT VIEW
(LOOKING @ 0° REF
ORIENTATION DETAIL)

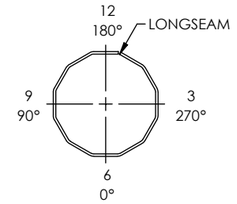

ORIENTATION DETAIL
TOP VIEW

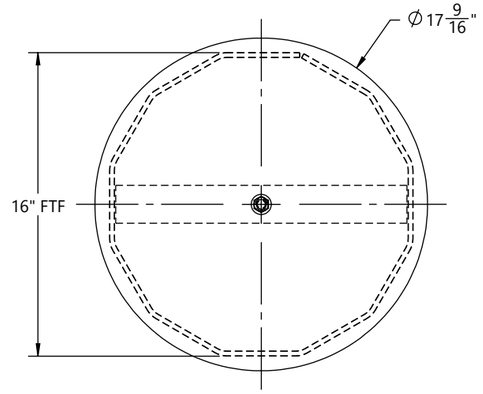

SECTION B-B

HOLE CHART		
HOLE SIZE (INCH)	DISTANCE FROM TOP OF SHAFT	FLAT(S)
13/16"	9'-0"	3, 9
13/16"	10'-0"	3, 9
13/16"	17'-0"	3, 9
13/16"	18'-0"	3, 9
13/16"	25'-0"	3, 9
13/16"	26'-0"	3, 9
11/16"	33'-0"	6,12
11/16"	34'-0"	6,12
11/16"	37'-0"	6,12
11/16"	38'-0"	6,12
11/16"	41'-0"	6,12
11/16"	42'-0"	6,12

CUSTOMER PLEASE VERIFY
ELEVATION HOLES AT 41'-0"
& 42'-0" ARE FALLING
ON SLIP JOINT PLEASE SUGGEST

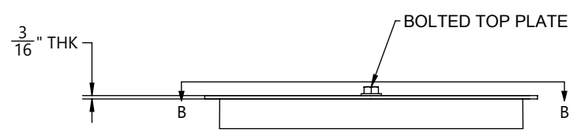

DETAIL A

BY		DATE
DRAWN:	KR	07/17/2026
CHK'D:	EV	07/17/2026

(SEE CHM IND., INC. PROCEDURE CHM-PR-1.7.3-F1 FOR STANDARD TOLERANCES)

REV.	ECR #	DESCRIPTION	APPROVED BY	DATE
1		SUBMITTAL FOR APPROVAL	EV	07/17/2026

REVISIONS

CHM INDUSTRIES
700 E. McLEROY BLVD
SAGINAW, TEXAS 76179
682.286.0046 PH
682.286.0086 FX
CHMINDUSTRIES.COM

QTY: 1 | GLM: (FT-K) 1296.11 | JOB NO. 12899 | PART NO. 12899-01600-MN | DWG NO. 12899-01600

CUST NAME: GREENVILLE UTILITIES STEEL STRUCTURES- NC
STR #: 59 TYPE/CLASS-HEIGHT: S17-80'-0"
DESCRIPTION: STRUCTURE, 31.78" X 16.00" X 78'-0"

SCALE: NTS DO NOT SCALE DRAWING
REV.: 1 SHEET: 1 of 6

THIS DWG IS PROPERTY OF CHM INDUSTRIES AND CONTAINS PROPRIETARY INFORMATION WHICH MAY NOT BE COPIED OR REPRODUCED WITHOUT PRIOR WRITTEN CONSENT FROM CHM INDUSTRIES.

FINISH:	BLACK WEIGHT	GALVANIZED WEIGHT
GALVANIZED	4296 LBS	4554 LBS
WEIGHTS ABOVE INCLUDE ALL BOM ITEMS		

SEE GENERAL NOTES AND DETAILS SHEET FOR SUPPLEMENTARY INFORMATION

ITEM #	PART #	DESCRIPTION	MAT'L	QTY.
1	12899-01600-SHB	SHAFT, 12S, 31.78" X 29.91" X 5/16" X 8'-6"	A572 GR65	1
2	12899-01600-CAS-SHS	SHAFT, 12S, 31.78" X 31.78" X 5/16" X 26'-6"	A572 GR65	1
3	12899-01600-CAS-SHG	GND SLV HALF, 12S, 32.16" X 32.16" X 3/16" X 4'-0"	A572 GR65	2
4	12899-01600-PLT	SPLICE PLATE, Ø38 3/4" X 2'- 3/4"X1"	A572 GR65	1
5	12899-01600-EAR	DRIVING EAR 1'-0"X 1'-2 1/2" X 1"	A572 GR65	2
6	B22011	4X4 ID TAG, A588	A588	1
7	43026	NUT, HEAVY HEX, 1-8, A563 DH3	A563-DH3	4
8	43010	NUT, HEAVY HEX, 1/2-13, HDG, A563 DH	A563-DH	1

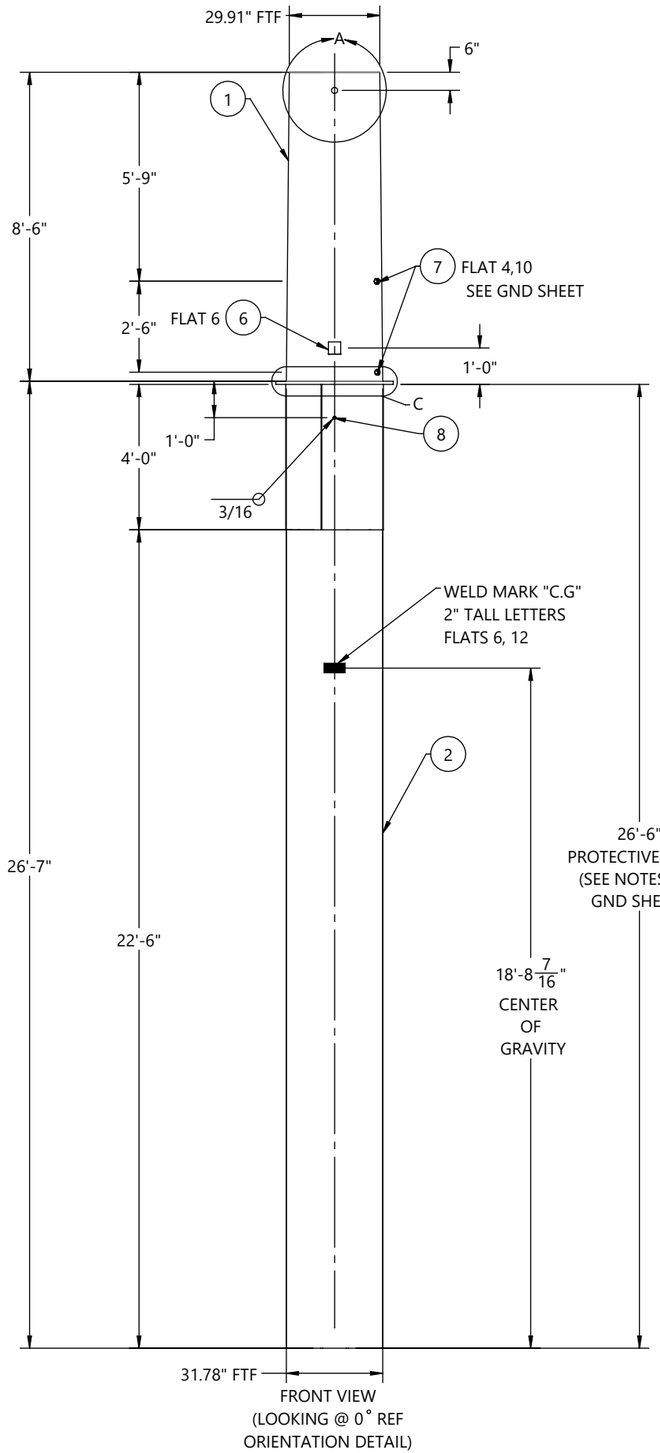

FRONT VIEW
(LOOKING @ 0° REF
ORIENTATION DETAIL)

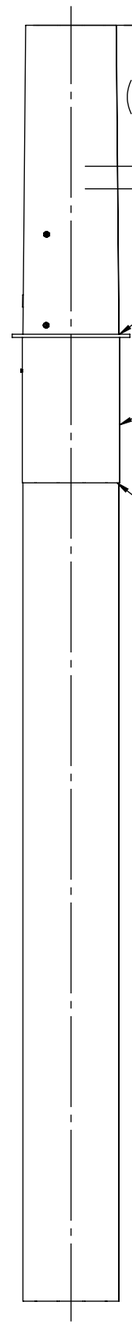

SIDE VIEW
(LOOKING @ 270° REF
ORIENTATION DETAIL)

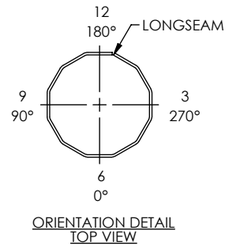

ORIENTATION DETAIL
TOP VIEW

GREENVILLE UTILITIES STEEL STRUCTURES- NC
STR#: 59, S17-80'-0"
GLM: 1296.11 FT-K
STR WT: 10624 LBS
SEC WT: 4554 LBS
DOM: [mm/YYYY]
CHM-12899-01600
12899-01600-BOT

ID TAG

TEXT TO BE 7/16" LETTERS
TAGS TO BE ORIENTED ON 0° FLAT
WEIGHT ON ID TAG IS FINISHED GALV. WEIGHT

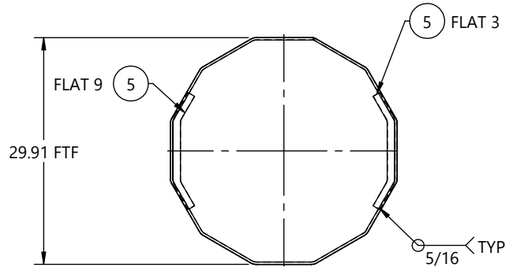

SECTION B-B

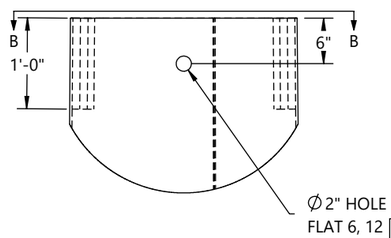

DETAIL A

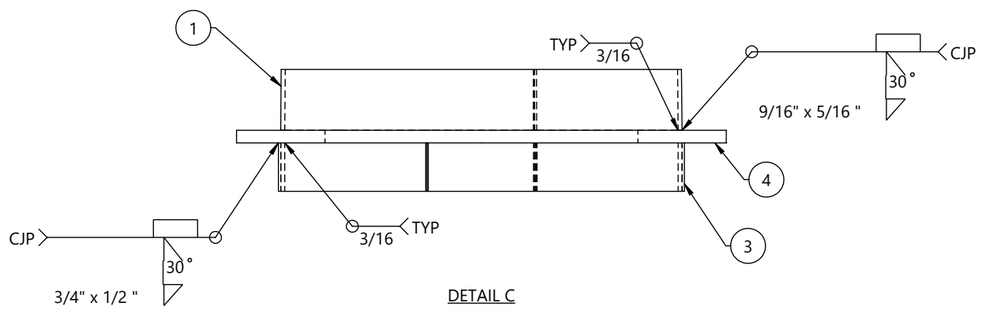

DETAIL C

REV.	ECR #	DESCRIPTION	APPROVED BY	DATE
1		SUBMITTAL FOR APPROVAL	EV	07/17/2026

REVISIONS

BY		DATE
DRAWN:	KR	07/17/2026
CHK'D:	EV	07/17/2026

(SEE CHM IND., INC. PROCEDURE CHM-PR-1.7.3-F1 FOR STANDARD TOLERANCES)

CHM INDUSTRIES
700 E. McLEROY BLVD
SAGINAW, TEXAS 76179
682.286.0046 PH
682.286.0086 FX
CHMINDUSTRIES.COM

QTY: 1 | GLM: (FT-K) 1296.11 | JOB NO. 12899 | PART NO. 12899-01600-BOT | DWG NO. 12899-01600

CUST NAME: GREENVILLE UTILITIES STEEL STRUCTURES- NC
STR #: 59 TYPE/CLASS-HEIGHT: S17-80'-0"
DESCRIPTION: BOTTOM SECTION, 31.78" X 29.91" X 5/16" X 8'-6"

SCALE: NTS DO NOT SCALE DRAWING
REV.: 1 SHEET: 2 of 6

THIS DWG IS PROPERTY OF CHM INDUSTRIES AND CONTAINS PROPRIETARY INFORMATION WHICH MAY NOT BE COPIED OR REPRODUCED WITHOUT PRIOR WRITTEN CONSENT FROM CHM INDUSTRIES.

FINISH:	BLACK WEIGHT	GALVANIZED WEIGHT
GALVANIZED	3112 LBS	3299 LBS
WEIGHTS ABOVE INCLUDE ALL BOM ITEMS		

SEE GENERAL NOTES AND DETAILS SHEET FOR SUPPLEMENTARY INFORMATION

ITEM #	PART #	DESCRIPTION	MAT'L	QTY.
1	12899-01600-SHM	SHAFT, 12S, 31.65" X 24.45" X 5/16" X 32'-9"	A572 GR65	1
2	12899-01600-VS205	VANG, OBROUND, 2-SIDED, 35 1/16" X 3" X 5/8"	A572 GR65	1
3	43026	NUT, HEAVY HEX, 1-8, A563 DH3	A563-DH3	8
4	B22011	4X4 ID TAG, A588	A588	1
5	43010	NUT, HEAVY HEX, 1/2-13, HDG, A563 DH	A563-DH	1

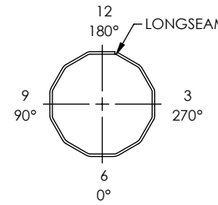

ORIENTATION DETAIL
TOP VIEW

GREENVILLE UTILITIES STEEL STRUCTURES- NC
STR#: 59, S17-80'-0"
SEC WT: 3299 LBS
DOM: [mm/YYYY]
CHM-12899-01600
12899-01600-MID

ID TAG

TEXT TO BE 7/16" LETTERS
TAGS TO BE ORIENTED ON 0° FLAT
WEIGHT ON ID TAG IS FINISHED GALV. WEIGHT

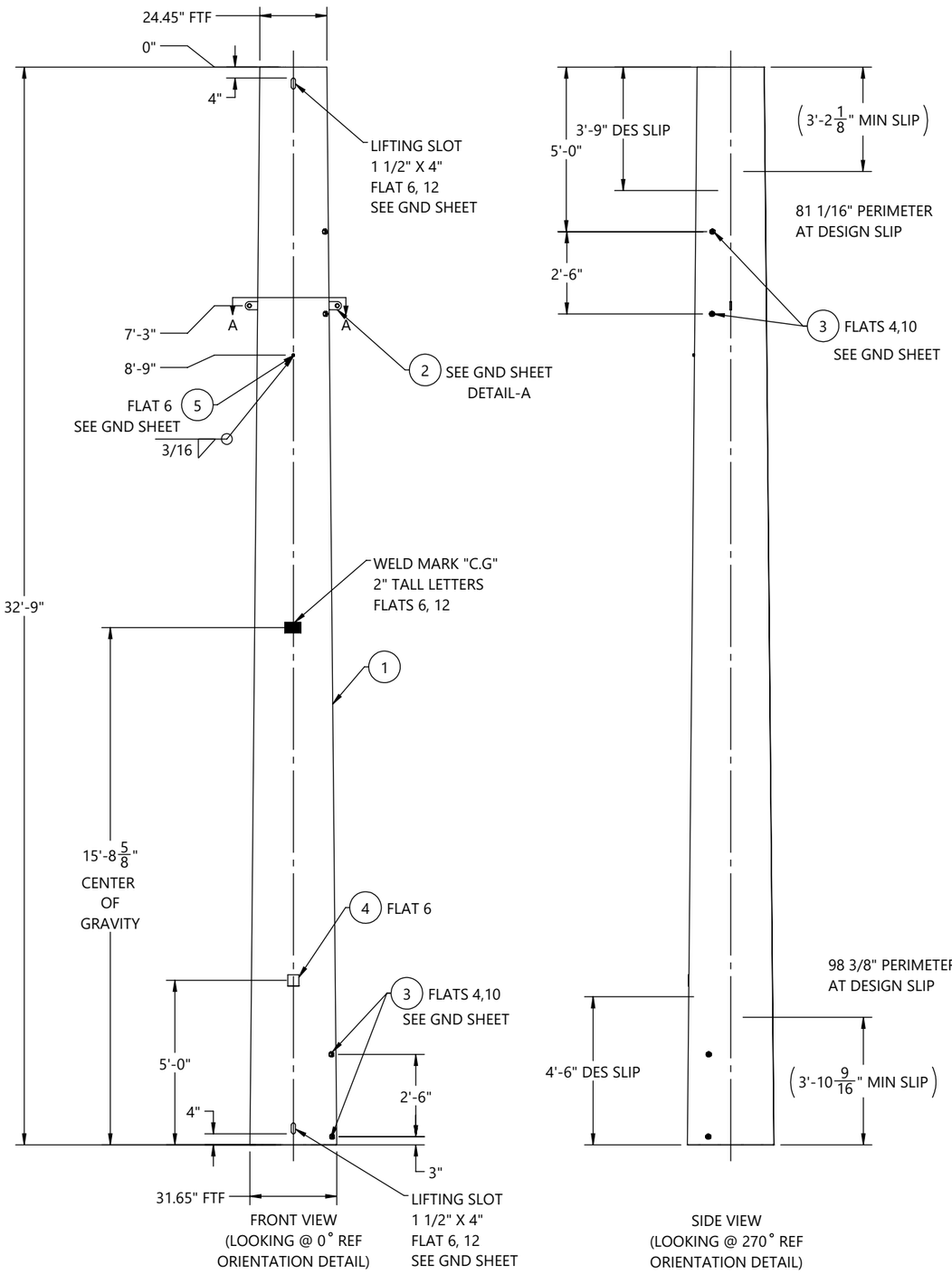

FRONT VIEW
(LOOKING @ 0° REF
ORIENTATION DETAIL)

SIDE VIEW
(LOOKING @ 270° REF
ORIENTATION DETAIL)

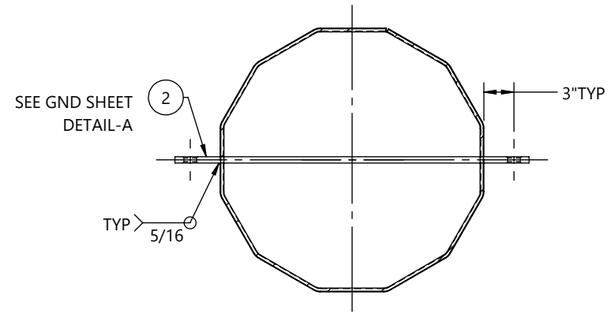

SECTION A-A

BY		DATE
DRAWN:	KR	07/17/2026
CHK'D:	EV	07/17/2026

REV.	ECR #	DESCRIPTION	APPROVED BY	DATE
1		SUBMITTAL FOR APPROVAL	EV	07/17/2026

REVISIONS

CHM INDUSTRIES
700 E. McLEROY BLVD
SAGINAW, TEXAS 76179
682.286.0046 PH
682.286.0086 FX
CHMINDUSTRIES.COM

(SEE CHM IND., INC. PROCEDURE CHM-PR-1.7.3-F1 FOR STANDARD TOLERANCES)

QTY: 1 | GLM: (FT-K) 1296.11 | JOB NO. 12899 | PART NO. 12899-01600-MID | DWG NO. 12899-01600

CUST NAME: GREENVILLE UTILITIES STEEL STRUCTURES- NC
STR #: 59 TYPE/CLASS-HEIGHT: S17-80'-0"
DESCRIPTION: MIDDLE SECTION, 31.65" X 24.45" X 5/16" X 32'-9"

SCALE: NTS
DO NOT SCALE DRAWING
REV: 1 | SHEET: 3 of 6

THIS DWG IS PROPERTY OF CHM INDUSTRIES AND CONTAINS PROPRIETARY INFORMATION WHICH MAY NOT BE COPIED OR REPRODUCED WITHOUT PRIOR WRITTEN CONSENT FROM CHM INDUSTRIES.

FINISH:	BLACK WEIGHT	GALVANIZED WEIGHT
GALVANIZED	2615 LBS	2772 LBS
WEIGHTS ABOVE INCLUDE ALL BOM ITEMS		

SEE GENERAL NOTES AND DETAILS SHEET FOR SUPPLEMENTARY INFORMATION

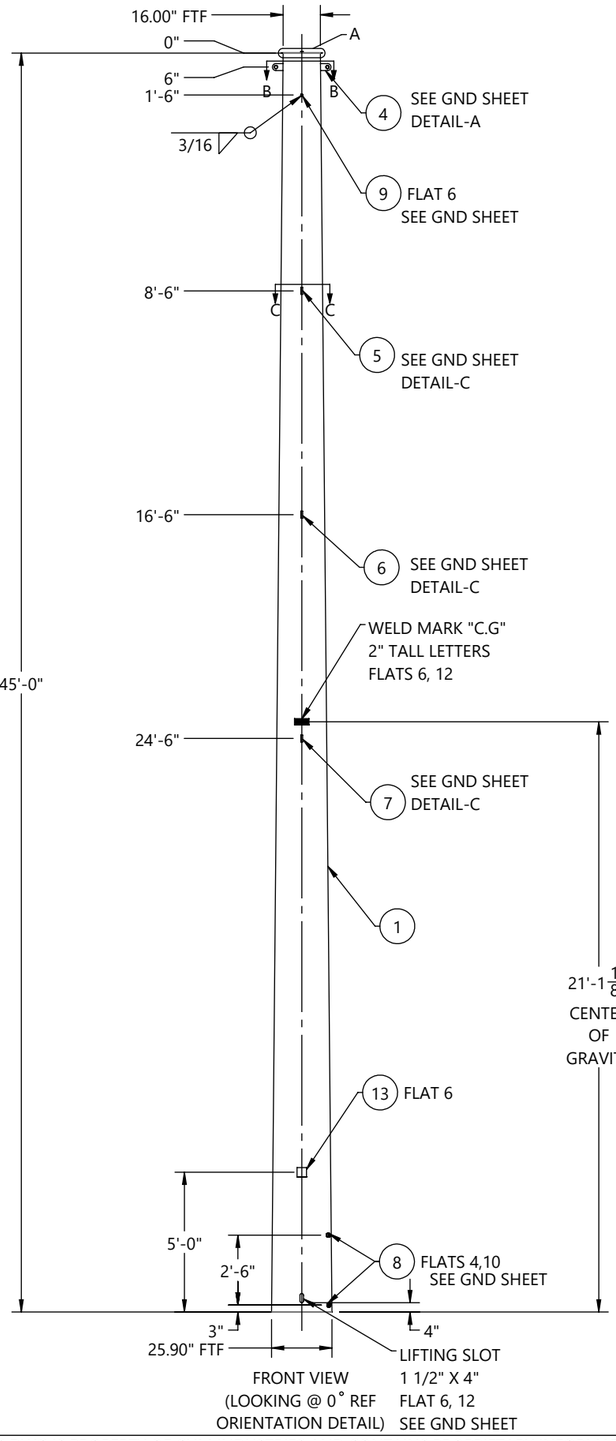

FRONT VIEW
(LOOKING @ 0° REF ORIENTATION DETAIL)

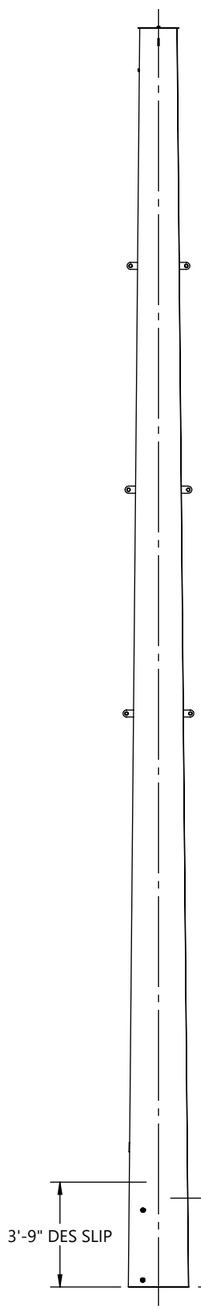

SIDE VIEW
(LOOKING @ 270° REF ORIENTATION DETAIL)

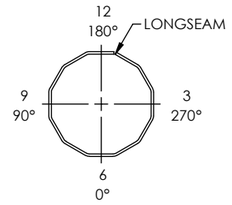

ORIENTATION DETAIL
TOP VIEW

GREENVILLE UTILITIES STEEL STRUCTURES- NC
STR#: 59, S17-80'-0"
SEC WT: 2772 LBS
DOM: [mm/YYYY]
CHM-12899-01600
12899-01600-TOP

ID TAG

TEXT TO BE 7/16" LETTERS
TAGS TO BE ORIENTED ON 0° FLAT
WEIGHT ON ID TAG IS FINISHED GALV. WEIGHT

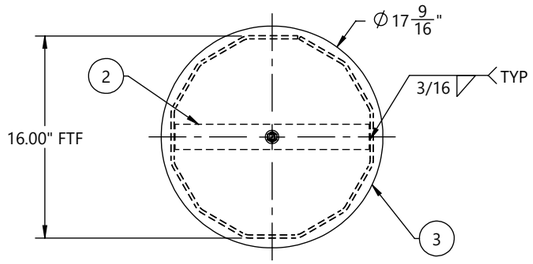

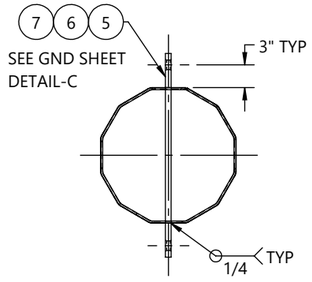

SECTION C-C
TYP 3 PLACES

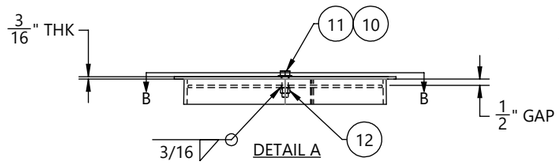

DETAIL A

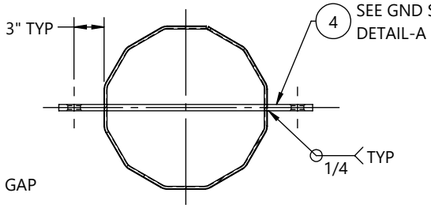

SECTION B-B

HOLE CHART		
HOLE SIZE (INCH)	DISTANCE FROM TOP OF SHAFT	FLAT(S)
13/16"	9'-0"	3, 9
13/16"	10'-0"	3, 9
13/16"	17'-0"	3, 9
13/16"	18'-0"	3, 9
13/16"	25'-0"	3, 9
13/16"	26'-0"	3, 9
11/16"	33'-0"	6,12
11/16"	34'-0"	6,12
11/16"	37'-0"	6,12
11/16"	38'-0"	6,12
11/16"	41'-0"	6,12
11/16"	42'-0"	6,12

CUSTOMER PLEASE VERIFY ELEVATION HOLES AT 41'-0" & 42'-0" ARE FALLING ON SLIP JOINT PLEASE SUGGEST

ITEM #	PART #	DESCRIPTION	MAT'L	QTY.
1	12899-01600-SHT	SHAFT, 12S, 25.90" X 16.00" X 1/4" X 45'-0"	A572 GR65	1
2	12899-01600-TS	TOP STRAP, 15 3/8" X 2" X 3/16"	A572 GR65	1
3	12899-01600-CP	COVER PLATE, Ø17 9/16" X 3/16"	A572 GR65	1
4	12899-01600-VS201	VANG, OBROUND, 2-SIDED, 25 1/8" X 3" X 5/8"	A572 GR65	1
5	12899-01600-VS202	VANG, OBROUND, 2-SIDED, 26 7/8" X 3" X 3/4"	A572 GR65	1
6	12899-01600-VS203	VANG, OBROUND, 2-SIDED, 28 5/8" X 3" X 3/4"	A572 GR65	1
7	12899-01600-VS204	VANG, OBROUND, 2-SIDED, 30 3/8" X 3" X 3/4"	A572 GR65	1
8	43026	NUT, HEAVY HEX, 1-8, A563 DH3	A563-DH3	4
9	43010	NUT, HEAVY HEX, 1/2-13, HDG, A563 DH	A563-DH	1
10	44018	WASHER, FLAT, 1/2", HDG, F436 T1	F436-T1	1
11	42120	BOLT, 1/2-13 X 1-3/4", HDG, HH, A307 A	A307-A	1
12	43029	NUT, HEX, 1/2-13, BLK, A563 DH	A563-DH	1
13	B22011	4X4 ID TAG, A588	A588	1

REV.	ECR #	DESCRIPTION	APPROVED BY	DATE
1		SUBMITTAL FOR APPROVAL	EV	07/17/2026

REVISIONS

BY		DATE
DRAWN:	KR	07/17/2026
CHK'D:	EV	07/17/2026

(SEE CHM IND., INC. PROCEDURE CHM-PR-1.7.3-F1 FOR STANDARD TOLERANCES)

CHM INDUSTRIES
700 E. McLEROY BLVD
SAGINAW, TEXAS 76179
682.286.0046 PH
682.286.0086 FX
CHMINDUSTRIES.COM

QTY: 1 | GLM: (FT-K) 1296.11 | JOB NO. 12899 | PART NO. 12899-01600-TOP | DWG NO. 12899-01600

CUST NAME: GREENVILLE UTILITIES STEEL STRUCTURES- NC
STR #: 59 TYPE/CLASS-HEIGHT: S17-80'-0"
DESCRIPTION: TOP SECTION, 25.90" X 16.00" X 1/4" X 45'-0"

SCALE: NTS DO NOT SCALE DRAWING
REV. 1 SHEET: 4 of 6

THIS DWG IS PROPERTY OF CHM INDUSTRIES AND CONTAINS PROPRIETARY INFORMATION WHICH MAY NOT BE COPIED OR REPRODUCED WITHOUT PRIOR WRITTEN CONSENT FROM CHM INDUSTRIES.

SEE GENERAL NOTES AND DETAILS SHEET FOR SUPPLEMENTARY INFORMATION

INDIVIDUAL STRUCTURE BILL OF MATERIALS			
ITEM NO.	PART NUMBER	DESCRIPTION	QTY.
1	12899-01600-BOT	BOTTOM SECTION, 31.78" X 29.91" X 5/16" X 8'-6"	1
1.1	12899-01600-SHB	SHAFT, 12S, 31.78" X 29.91" X 5/16" X 8'-6"	1
1.2	B22011	4X4 ID TAG, A588	1
1.3	43026	NUT, HEAVY HEX, 1-8, A563 DH3	4
1.4	12899-01600-EAR	DRIVING EAR 1'-0"X 1'-2 1/2" X 1"	2
1.5	ASSY-01600-CAS-MN	STRUCTURE, 31.78" X 31.78" X 26'-6"	1
1.5.1	ASSY-01600-CAS-SNG	SINGLE SECTION, 31.78" X 31.78" X 5/16" X 26'-6"	1
1.5.1.1	12899-01600-CAS-SHS	SHAFT, 12S, 31.78" X 31.78" X 5/16" X 26'-6"	1
1.5.1.2	12899-01600-CAS-SHG	GND SLV HALF, 12S, 32.16" X 32.16" X 3/16" X 4'-0"	2
1.5.1.3	12899-01600-PLT	SPLICE PLATE, Ø38 3/4" X 2'- 3/4"X1"	1
1.6	43010	NUT, HEAVY HEX, 1/2-13, HDG, A563 DH	1
2	12899-01600-MID	MIDDLE SECTION, 31.65" X 24.45" X 5/16" X 32'-9"	1
2.1	12899-01600-SHM	SHAFT, 12S, 31.65" X 24.45" X 5/16" X 32'-9"	1
2.2	B22011	4X4 ID TAG, A588	1
2.3	43026	NUT, HEAVY HEX, 1-8, A563 DH3	8
2.4	12899-01600-VS205	VANG, OBROUND, 2-SIDED, 35 1/16" X 3" X 5/8"	1
2.5	43010	NUT, HEAVY HEX, 1/2-13, HDG, A563 DH	1
3	12899-01600-TOP	TOP SECTION, 25.90" X 16.00" X 1/4" X 45'-0"	1
3.1	12899-01600-SHT	SHAFT, 12S, 25.90" X 16.00" X 1/4" X 45'-0"	1
3.2	12899-01600-TS	TOP STRAP, 15 3/8" X 2" X 3/16"	1
3.3	12899-01600-VS201	VANG, OBROUND, 2-SIDED, 25 1/8" X 3" X 5/8"	1
3.4	B22011	4X4 ID TAG, A588	1
3.5	43026	NUT, HEAVY HEX, 1-8, A563 DH3	4
3.6	43010	NUT, HEAVY HEX, 1/2-13, HDG, A563 DH	1
3.7	12899-01600-CP	COVER PLATE, Ø17 9/16" X 3/16"	1
3.8	44018	WASHER, FLAT, 1/2", HDG, F436 T1	1
3.9	42120	BOLT, 1/2-13 X 1-3/4", HDG, HH, A307 A	1
3.10	12899-01600-VS202	VANG, OBROUND, 2-SIDED, 26 7/8" X 3" X 3/4"	1
3.11	12899-01600-VS203	VANG, OBROUND, 2-SIDED, 28 5/8" X 3" X 3/4"	1
3.12	12899-01600-VS204	VANG, OBROUND, 2-SIDED, 30 3/8" X 3" X 3/4"	1
3.13	43029	NUT, HEX, 1/2-13, BLK, A563 DH	1

BY		DATE
DRAWN:	KR	07/17/2026
CHK'D:	EV	07/17/2026

CHM INDUSTRIES
700 E. McLEROY BLVD
SAGINAW, TEXAS 76179
682.286.0046 PH
682.286.0086 FX
CHMINDUSTRIES.COM

(SEE CHM IND., INC. PROCEDURE CHM-PR-1.7.3-F1 FOR STANDARD TOLERANCES)

QTY: 1 | GLM: (FT-K) 1296.11 | JOB NO. 12899 | PART NO. 12899-01600-SBOM | DWG NO. 12899-01600

CUST NAME: GREENVILLE UTILITIES STEEL STRUCTURES- NC

STR #: 59 TYPE/CLASS-HEIGHT: S17-80'-0"

DESCRIPTION: STRUCTURE, 31.78" X 16.00" X 78'-0"

SCALE: NTS DO NOT SCALE DRAWING | REV.: 1 | SHEET: 5 of 6

THIS DWG IS PROPERTY OF CHM INDUSTRIES AND CONTAINS PROPRIETARY INFORMATION WHICH MAY NOT BE COPIED OR REPRODUCED WITHOUT PRIOR WRITTEN CONSENT FROM CHM INDUSTRIES.

SEE GENERAL NOTES AND DETAILS SHEET FOR SUPPLEMENTARY INFORMATION

TOTAL JOB MATERIAL REQUIREMENTS				
ITEM NO.	PART NUMBER	DESCRIPTION	QTY.	JOB QTY.
1	42120	BOLT, 1/2-13 X 1-3/4", HDG, HH, A307 A	1	1
2	43026	NUT, HEAVY HEX, 1-8, A563 DH3	16	16
3	44018	WASHER, FLAT, 1/2", HDG, F436 T1	1	1
4	B22011	4X4 ID TAG, A588	3	3
5	12899-01600-VS201	VANG, OBROUND, 2-SIDED, 25 1/8" X 3" X 5/8"	1	1
6	12899-01600-CP	COVER PLATE, Ø17 9/16" X 3/16"	1	1
7	12899-01600-SHB	SHAFT, 12S, 31.78" X 29.91" X 5/16" X 8'-6"	1	1
8	12899-01600-SHM	SHAFT, 12S, 31.65" X 24.45" X 5/16" X 32'-9"	1	1
9	12899-01600-SHT	SHAFT, 12S, 25.90" X 16.00" X 1/4" X 45'-0"	1	1
10	12899-01600-TS	TOP STRAP, 15 3/8" X 2" X 3/16"	1	1
11	12899-01600-VS202	VANG, OBROUND, 2-SIDED, 26 7/8" X 3" X 3/4"	1	1
12	12899-01600-VS203	VANG, OBROUND, 2-SIDED, 28 5/8" X 3" X 3/4"	1	1
13	12899-01600-VS204	VANG, OBROUND, 2-SIDED, 30 3/8" X 3" X 3/4"	1	1
14	12899-01600-VS205	VANG, OBROUND, 2-SIDED, 35 1/16" X 3" X 5/8"	1	1
15	43010	NUT, HEAVY HEX, 1/2-13, HDG, A563 DH	3	3
16	43029	NUT, HEX, 1/2-13, BLK, A563 DH	1	1
17	12899-01600-EAR	DRIVING EAR 1'-0"X 1'-2 1/2" X 1"	2	2
18	12899-01600-CAS-SHS	SHAFT, 12S, 31.78" X 31.78" X 5/16" X 26'-6"	1	1
19	12899-01600-CAS-SHG	GND SLV HALF, 12S, 32.16" X 32.16" X 3/16" X 4'-0"	2	2
20	12899-01600-PLT	SPLICE PLATE, Ø38 3/4" X 2'- 3/4"X1"	1	1

BY		DATE
DRAWN:	KR	07/17/2026
CHK'D:	EV	07/17/2026

CHM INDUSTRIES
700 E. McLEROY BLVD
SAGINAW, TEXAS 76179
682.286.0046 PH
682.286.0086 FX
CHMINDUSTRIES.COM

(SEE CHM IND., INC. PROCEDURE CHM-PR-1.7.3-F1 FOR STANDARD TOLERANCES)

QTY: 1 | GLM: (FT-K) 1296.11 | JOB NO. 12899 | PART NO. 12899-01600-PBOM | DWG NO. 12899-01600

CUST NAME: GREENVILLE UTILITIES STEEL STRUCTURES- NC
STR #: 59 TYPE/CLASS-HEIGHT: S17-80'-0"
DESCRIPTION: STRUCTURE, 31.78" X 16.00" X 78'-0"

SCALE: NTS DO NOT SCALE DRAWING | REV: 1 | SHEET: 6 of 6

THIS DWG IS PROPERTY OF CHM INDUSTRIES AND CONTAINS PROPRIETARY INFORMATION WHICH MAY NOT BE COPIED OR REPRODUCED WITHOUT PRIOR WRITTEN CONSENT FROM CHM INDUSTRIES.

FINISH:	BLACK WEIGHT	GALVANIZED WEIGHT
GALVANIZED	23593 LBS	25009 LBS
	WEIGHTS ABOVE INCLUDE ALL BOM ITEMS	

SEE GENERAL NOTES AND DETAILS SHEET FOR SUPPLEMENTARY INFORMATION

ITEM #	PART #	DESCRIPTION	QTY.
1	12899-01700-BOT	BOTTOM SECTION, 53.00" X 38.81" X 5/16" X 33'-6"	1
2	12899-01700-MID	MIDDLE SECTION, 41.76 X 27.57 X 1/4" X 33'-6"	1
3	12899-01700-TOP	TOP SECTION, 29.87" X 16.00" X 3/16" X 32'-9"	1
4	12899-01700-CAS	CAISSION, 45.00" X 45.00"X 1/2" X 33'-0"	1
5	12899-01700-AB	ANCHOR BOLT, Ø2 1/4" X 4'-0", A-615	12
6	44070	WASHER, FLAT, 2-1/4", HDG, F436 T1	12
7	43035	NUT, HEAVY HEX, 2 1/4-4.5, HDG, A563 DH	48

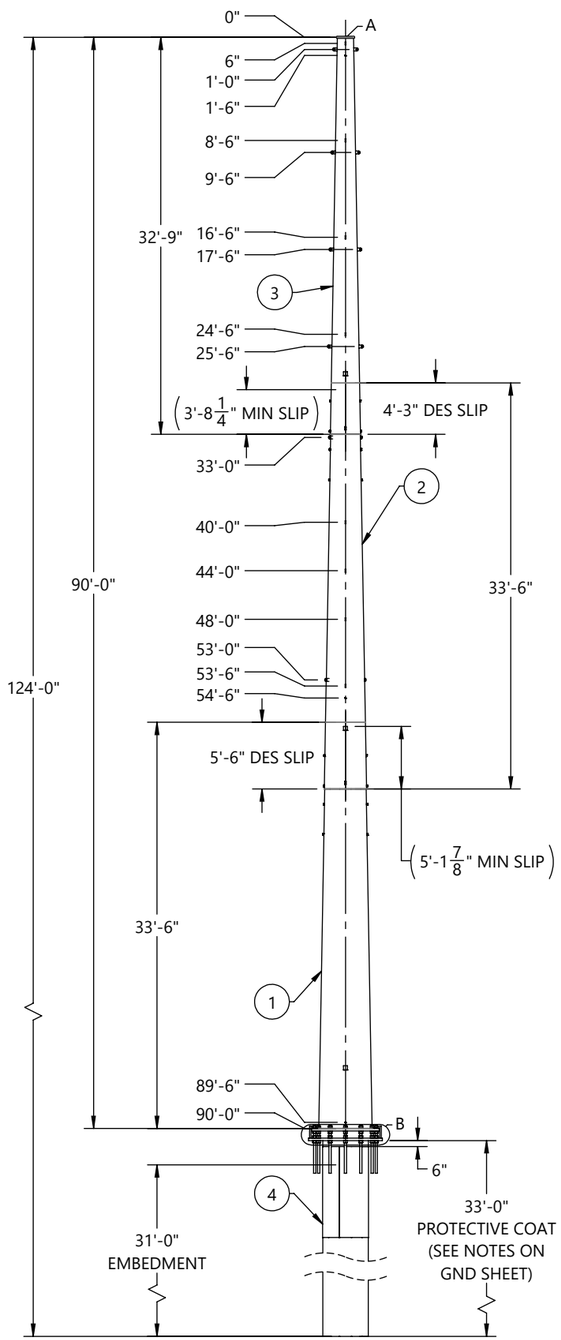

FRONT VIEW
(LOOKING @ 0° REF
ORIENTATION DETAIL)

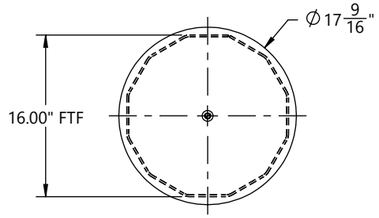

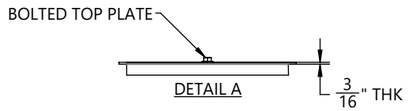

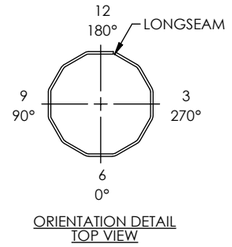

ORIENTATION DETAIL
TOP VIEW

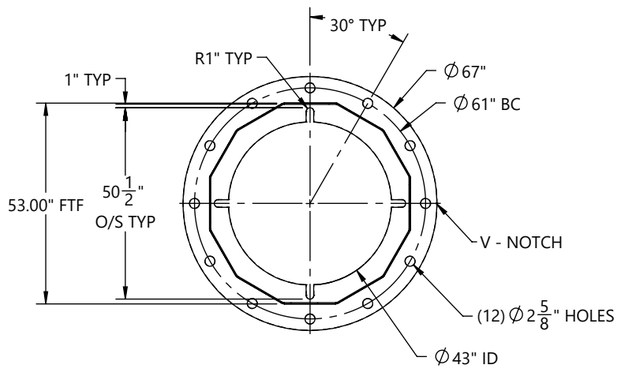

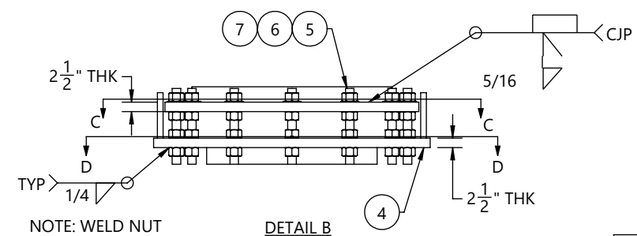

NOTE: WELD NUT
PRIOR TO BASE PLATE

DETAIL B

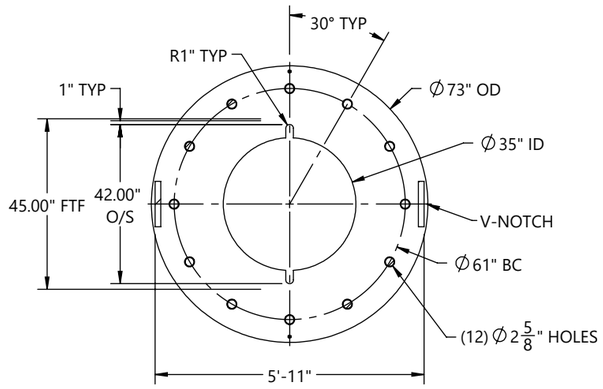

SECTION D-D

HOLE CHART		
HOLE SIZE (INCH)	DISTANCE FROM TOP OF SHAFT	FLAT(S)
11/16"	33' - 6"	2, 8
11/16"	34' - 6"	2, 8
11/16"	38' - 6"	2, 8
11/16"	39' - 6"	2, 8
11/16"	42' - 6"	2, 8
11/16"	43' - 6"	2, 8
11/16"	46' - 6"	2, 8
11/16"	47' - 6"	2, 8

BY	DATE
DRAWN: MP	06/26/2026
CHK'D: EV	06/26/2026

REV.	ECR #	DESCRIPTION	APPROVED BY	DATE
1		SUBMITTAL FOR APPROVAL	EV	07/17/2026

REVISIONS

CHM INDUSTRIES
700 E. McLEROY BLVD
SAGINAW, TEXAS 76179
682.286.0046 PH
682.286.0086 FX
CHMINDUSTRIES.COM

(SEE CHM IND., INC. PROCEDURE CHM-PR-1.7.3-F1 FOR STANDARD TOLERANCES)

QTY: 1 | GLM: (FT-K) 2774.53 | JOB NO. 12899 | PART NO. 12899-01700-MN | DWG NO. 12899-01700

CUST NAME: GREENVILLE UTILITIES STEEL STRUCTURES- NC
STR #: 1 TYPE/CLASS-HEIGHT: 90'- 0"
DESCRIPTION: STRUCTURE, 53.00" X 16.00" X 90'-0"

SCALE: NTS
DO NOT SCALE DRAWING
REV. 1 SHEET: 1 of 7

THIS DWG IS PROPERTY OF CHM INDUSTRIES AND CONTAINS PROPRIETARY INFORMATION WHICH MAY NOT BE COPIED OR REPRODUCED WITHOUT PRIOR WRITTEN CONSENT FROM CHM INDUSTRIES.

FINISH:	BLACK WEIGHT	GALVANIZED WEIGHT
GALVANIZED	6617 LBS	7014 LBS
WEIGHTS ABOVE INCLUDE ALL BOM ITEMS		

SEE GENERAL NOTES AND DETAILS SHEET FOR SUPPLEMENTARY INFORMATION

ITEM NO.	PART NUMBER	DESCRIPTION	MATERIAL	QTY.
1	12899-01700-SHB	SHAFT, 12S, 53.00" X 38.81" X 5/16" X 33'-6"	A572 GR65	1
2	12899-01700-BSP	BASE PLATE, Ø67" X 2 1/2"	A572 GR50	1
3	43026	NUT, HEAVY HEX, 1-8, A563 DH3	A563-DH3	4
4	43010	NUT, HEAVY HEX, 1/2-13, HDG, A563 DH	A563-DH	1
5	B22011	4X4 ID TAG, A588	A588	1

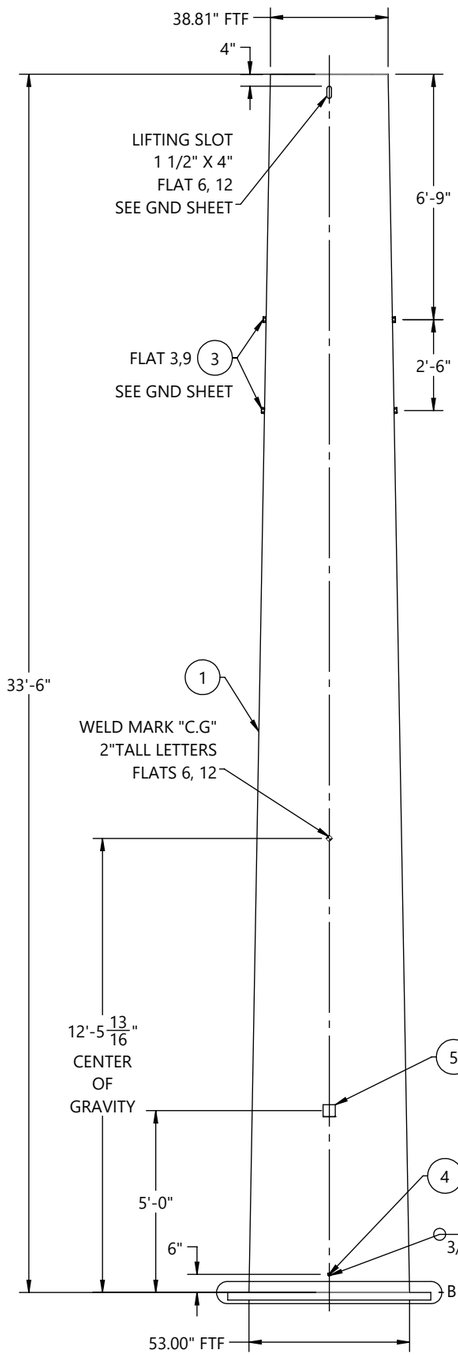

FRONT VIEW
(LOOKING @ 0˚ REF
ORIENTATION DETAIL)

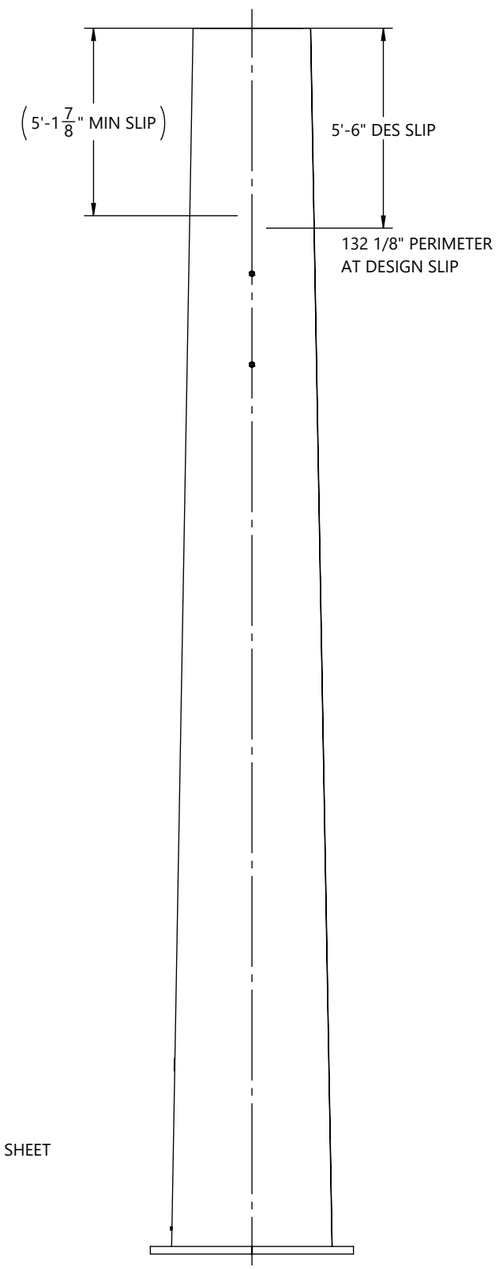

SIDE VIEW
(LOOKING @ 270˚ REF
ORIENTATION DETAIL)

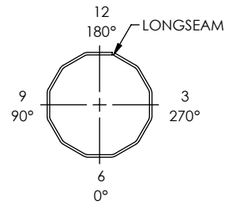

ORIENTATION DETAIL
TOP VIEW

GREENVILLE UTILITIES STEEL STRUCTURES- NC
STR#: 1, 90'- 0"
GLM: 2774.53 FT-K
STR WT: 25009 LBS
SEC WT: 7014 LBS
DOM: [mm/YYYY]
CHM-12899-01700
12899-01700-BOT

ID TAG

TEXT TO BE 7/16" LETTERS
TAGS TO BE ORIENTED ON 0° FLAT
WEIGHT ON ID TAG IS FINISHED GALV. WEIGHT

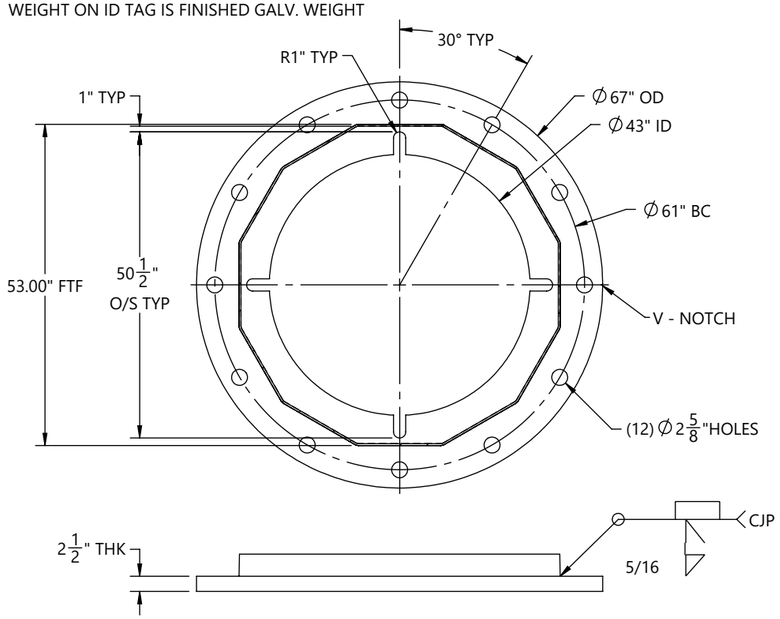

DETAIL B

BY	DATE
DRAWN: MP	06/26/2026
CHK'D: EV	06/26/2026

REV.	ECR #	DESCRIPTION	APPROVED BY	DATE
1		SUBMITTAL FOR APPROVAL	EV	07/17/2026

REVISIONS

CHM INDUSTRIES
700 E. McLEROY BLVD
SAGINAW, TEXAS 76179
682.286.0046 PH
682.286.0086 FX
CHMINDUSTRIES.COM

(SEE CHM IND., INC. PROCEDURE CHM-PR-1.7.3-F1 FOR STANDARD TOLERANCES)

QTY: 1	GLM: (FT-K) 2774.53	JOB NO. 12899	PART NO. 12899-01700-BOT	DWG NO. 12899-01700

CUST NAME: GREENVILLE UTILITIES STEEL STRUCTURES- NC
STR #: 1 TYPE/CLASS-HEIGHT: 90'- 0"
DESCRIPTION: BOTTOM SECTION, 53.00" X 38.81" X 5/16" X 33'-6"

SCALE: NTS
DO NOT SCALE DRAWING
REV. 1
SHEET: 2 of 7

THIS DWG IS PROPERTY OF CHM INDUSTRIES AND CONTAINS PROPRIETARY INFORMATION WHICH MAY NOT BE COPIED OR REPRODUCED WITHOUT PRIOR WRITTEN CONSENT FROM CHM INDUSTRIES.

FINISH:	BLACK WEIGHT	GALVANIZED WEIGHT
GALVANIZED	3283 LBS	3480 LBS
WEIGHTS ABOVE INCLUDE ALL BOM ITEMS		

SEE GENERAL NOTES AND DETAILS SHEET FOR SUPPLEMENTARY INFORMATION

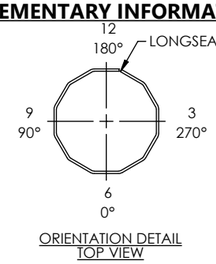

ORIENTATION DETAIL
TOP VIEW

ITEM #	PART #	DESCRIPTION	MAT'L	QTY.
1	12899-01700-SHM	SHAFT, 12S, 41.76" X 27.57" X 1/4" X 33'-6"	A572 GR65	1
2	12899-01700-VS209	VANG, OBROUND, 2-SIDED, 38 1/2" X 3" X 5/8"	A572 GR65	1
3	12899-01700-VS210	VANG, OBROUND, 2-SIDED, 41 7/16" X 3" X 5/8"	A572 GR65	1
4	12899-01700-VS211	VANG, OBROUND, 2-SIDED, 43 1/8" X 3" X 5/8"	A572 GR65	1
5	12899-01700-VS212	VANG, OBROUND, 2-SIDED, 44 13/16" X 3" X 5/8"	A572 GR65	1
6	12899-01700-VS213	VANG, OBROUND, 2-SIDED, 46 15/16" X 3" X 5/8"	A572 GR65	1
7	12899-01700-VS214	VANG, OBROUND, 2-SIDED, 47 3/16" X 3" X 5/8"	A572 GR65	1
8	43010	NUT, HEAVY HEX, 1/2-13, HDG, A563 DH	A563-DH	1
9	43026	NUT, HEAVY HEX, 1-8, A563 DH3	A563-DH3	8
10	B22011	4X4 ID TAG, A588	A588	1

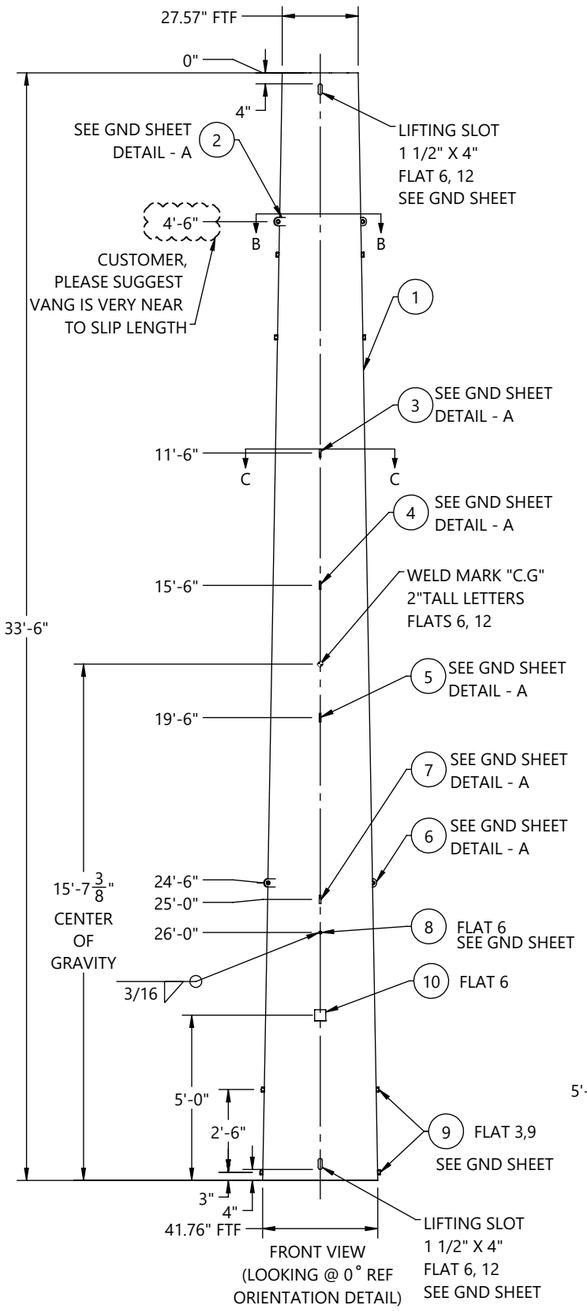

FRONT VIEW
(LOOKING @ 0° REF ORIENTATION DETAIL)

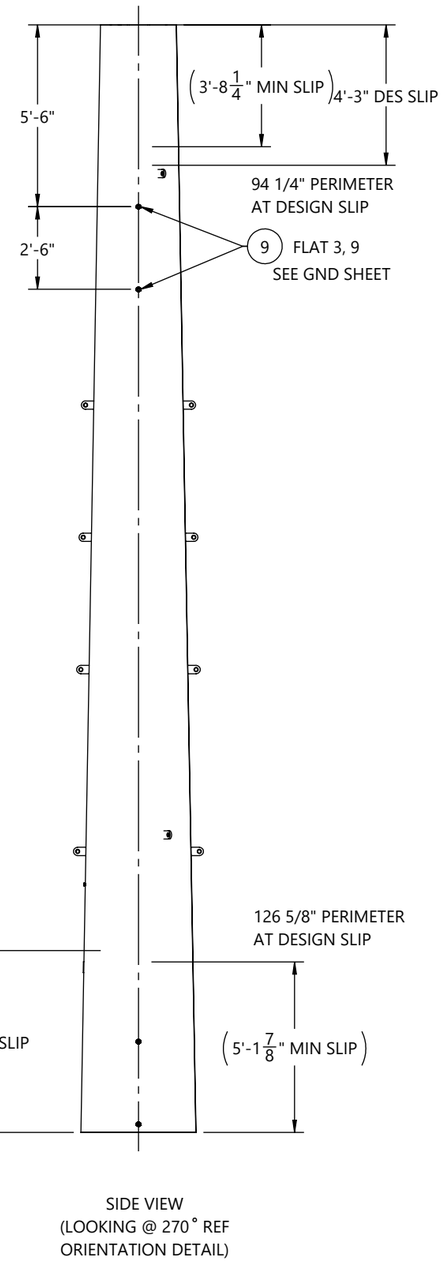

SIDE VIEW
(LOOKING @ 270° REF ORIENTATION DETAIL)

GREENVILLE UTILITIES STEEL STRUCTURES- NC
STR#: 1, 90'- 0"
SEC WT: 3480 LBS
DOM: [mm/YYYY]
CHM-12899-01700
12899-01700-MID

ID TAG
TEXT TO BE 7/16" LETTERS
TAGS TO BE ORIENTED ON 0° FLAT
WEIGHT ON ID TAG IS FINISHED GALV. WEIGHT

HOLE CHART		
HOLE SIZE (INCH)	DISTANCE FROM TOP OF SHAFT	FLAT(S)
11/16"	5' - 0"	2, 8
11/16"	6' - 0"	2, 8
11/16"	10' - 0"	2, 8
11/16"	11' - 0"	2, 8
11/16"	14' - 0"	2, 8
11/16"	15' - 0"	2, 8
11/16"	18' - 0"	2, 8
11/16"	19' - 0"	2, 8

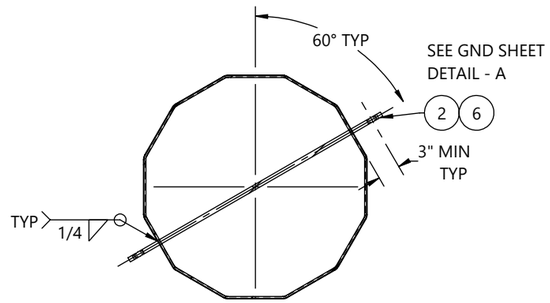

SECTION B-B
(TYP 2 PLACES)

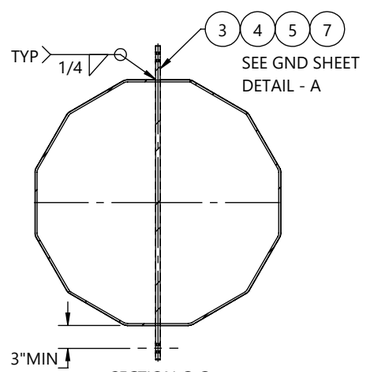

SECTION C-C
(TYP 4 PLACES)

BY	DATE
DRAWN: MP	06/26/2026
CHK'D: EV	06/26/2026

(SEE CHM IND., INC. PROCEDURE CHM-PR-1.7.3-F1 FOR STANDARD TOLERANCES)

REV.	ECR #	DESCRIPTION	APPROVED BY	DATE
1		SUBMITTAL FOR APPROVAL	EV	07/17/2026

REVISIONS

CHM INDUSTRIES
700 E. McLEROY BLVD
SAGINAW, TEXAS 76179
682.286.0046 PH
682.286.0086 FX
CHMINDUSTRIES.COM

QTY: 1 | GLM: (FT-K) 2774.53 | JOB NO. 12899 | PART NO. 12899-01700-MID | DWG NO. 12899-01700

CUST NAME: GREENVILLE UTILITIES STEEL STRUCTURES- NC
STR #: 1 TYPE/CLASS-HEIGHT: 90'- 0"
DESCRIPTION: MIDDLE SECTION, 41.76 X 27.57 X 1/4" X 33'-6"

SCALE: NTS DO NOT SCALE DRAWING
REV.: 1 SHEET: 3 of 7

THIS DWG IS PROPERTY OF CHM INDUSTRIES AND CONTAINS PROPRIETARY INFORMATION WHICH MAY NOT BE COPIED OR REPRODUCED WITHOUT PRIOR WRITTEN CONSENT FROM CHM INDUSTRIES.

FINISH:	BLACK WEIGHT	GALVANIZED WEIGHT
GALVANIZED	1682 LBS	1783 LBS
WEIGHTS ABOVE INCLUDE ALL BOM ITEMS		

SEE GENERAL NOTES AND DETAILS SHEET FOR SUPPLEMENTARY INFORMATION

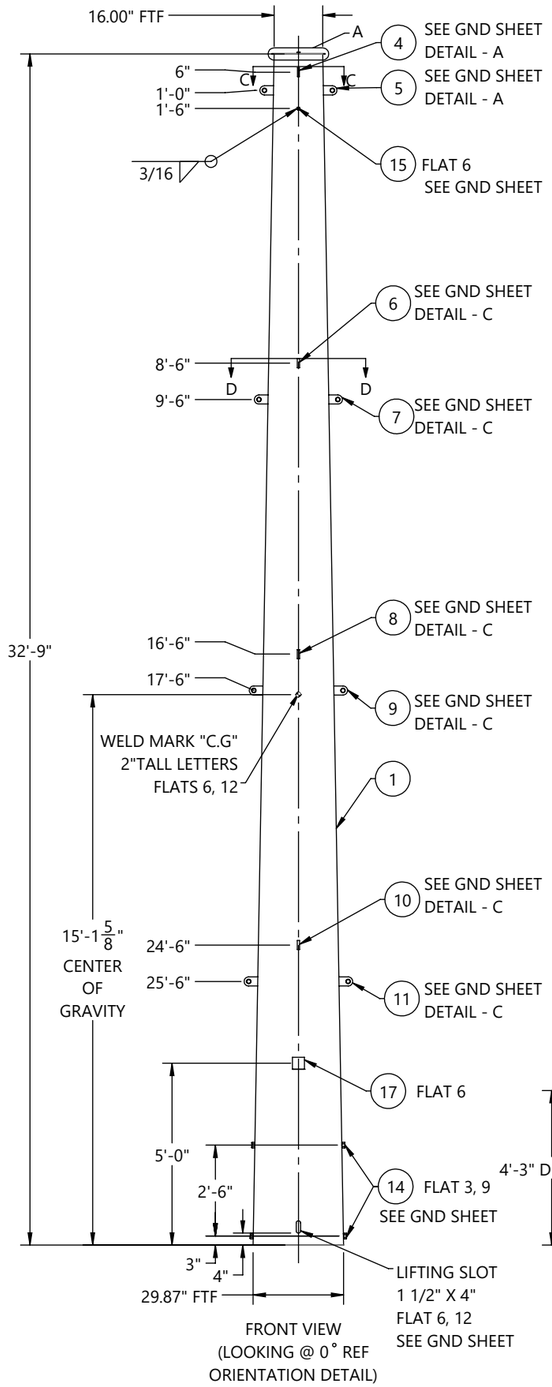

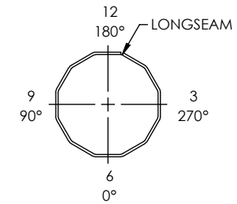

ORIENTATION DETAIL
TOP VIEW

GREENVILLE UTILITIES STEEL STRUCTURES- NC
STR#: 1, 90'- 0"
SEC WT: 1783 LBS
DOM: [mm/YYYY]
CHM-12899-01700
12899-01700-TOP

ID TAG

TEXT TO BE 7/16" LETTERS
TAGS TO BE ORIENTED ON 0° FLAT
WEIGHT ON ID TAG IS FINISHED GALV. WEIGHT

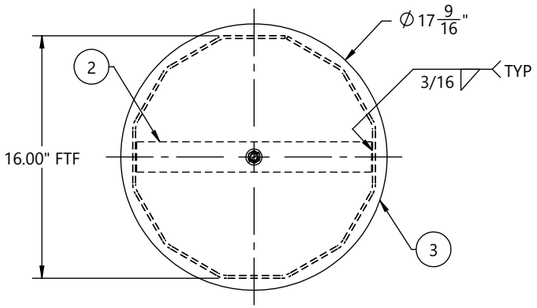

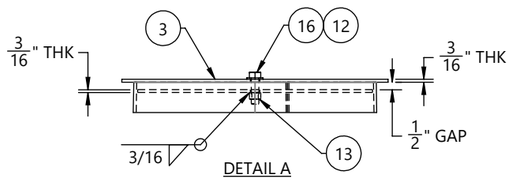

DETAIL A

ITEM #	PART #	DESCRIPTION	MAT'L	QTY.
1	12899-01700-SHT	SHAFT, 12S, 29.87" X 16.00" X 3/16" X 32'-9"	A572 GR65	1
2	12899-01700-TS	TOP STRAP, 15 1/2" X 2" X 3/16"	A572 GR65	1
3	12899-01700-CP	COVER PLATE, Ø17 9/16" X 3/16"	A572 GR65	1
4	12899-01700-VS201	VANG, OBROUND, 2-SIDED, 25 3/16" X 3" X 5/8"	A572 GR65	1
5	12899-01700-VS202	VANG, OBROUND, 2-SIDED, 25 7/16" X 3" X 5/8"	A572 GR65	1
6	12899-01700-VS203	VANG, OBROUND, 2-SIDED, 28 5/8" X 3" X 3/4"	A572 GR65	1
7	12899-01700-VS204	VANG, OBROUND, 2-SIDED, 29" X 3" X 3/4"	A572 GR65	1
8	12899-01700-VS205	VANG, OBROUND, 2-SIDED, 32" X 3" X 3/4"	A572 GR65	1
9	12899-01700-VS206	VANG, OBROUND, 2-SIDED, 32 7/16" X 3" X 3/4"	A572 GR65	1
10	12899-01700-VS207	VANG, OBROUND, 2-SIDED, 35 3/8" X 3" X 3/4"	A572 GR65	1
11	12899-01700-VS208	VANG, OBROUND, 2-SIDED, 35 13/16" X 3" X 3/4"	A572 GR65	1
12	44018	WASHER, FLAT, 1/2", HDG, F436 T1	F436-T1	1
13	43029	NUT, HEX, 1/2-13, BLK, A563 DH	A563-DH	1
14	43026	NUT, HEAVY HEX, 1-8, A563 DH3	A563-DH3	4
15	43010	NUT, HEAVY HEX, 1/2-13, HDG, A563 DH	A563-DH	1
16	42120	BOLT, 1/2-13 X 1-3/4", HDG, HH, A307 A	A307-A	1
17	B22011	4X4 ID TAG, A588	A588	1

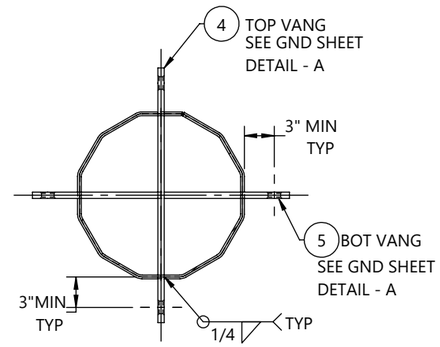

SECTION C-C
(TYP 2 PLACES)

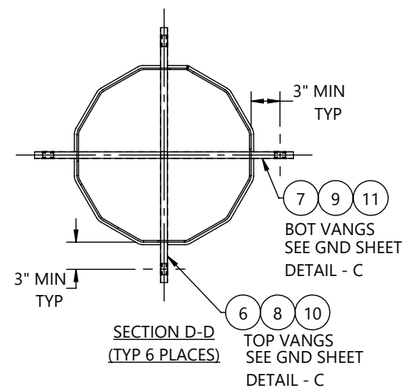

SECTION D-D
(TYP 6 PLACES)

REV.	ECR #	DESCRIPTION	APPROVED BY	DATE
1		SUBMITTAL FOR APPROVAL	EV	07/17/2026

REVISIONS

BY		DATE
DRAWN:	MP	06/26/2026
CHK'D:	EV	06/26/2026

(SEE CHM IND., INC. PROCEDURE CHM-PR-1.7.3-F1 FOR STANDARD TOLERANCES)

CHM INDUSTRIES
700 E. McLEROY BLVD
SAGINAW, TEXAS 76179
682.286.0046 PH
682.286.0086 FX
CHMINDUSTRIES.COM

QTY: 1 | GLM: (FT-K) 2774.53 | JOB NO. 12899 | PART NO. 12899-01700-TOP | DWG NO. 12899-01700

CUST NAME: GREENVILLE UTILITIES STEEL STRUCTURES- NC
STR #: 1 TYPE/CLASS-HEIGHT: 90'- 0"
DESCRIPTION: TOP SECTION, 29.87" X 16.00" X 3/16" X 32'-9"

SCALE: NTS DO NOT SCALE DRAWING
REV. 1 | SHEET: 4 of 7

THIS DWG IS PROPERTY OF CHM INDUSTRIES AND CONTAINS PROPRIETARY INFORMATION WHICH MAY NOT BE COPIED OR REPRODUCED WITHOUT PRIOR WRITTEN CONSENT FROM CHM INDUSTRIES.

FINISH:	BLACK WEIGHT	GALVANIZED WEIGHT
GALVANIZED	11054 LBS	11717 LBS
WEIGHTS ABOVE INCLUDE ALL BOM ITEMS		

SEE GENERAL NOTES AND DETAILS SHEET FOR SUPPLEMENTARY INFORMATION

ITEM #	PART #	DESCRIPTION	MAT'L	QTY.
1	12899-01700-SHS	SHAFT, 12S, 45.00" X 45.00" X 1/2" X 33'-0"	A572 GR65	1
2	12899-01700-SHG	GND SLV HALF, 12S, 45.38" X 45.38" X 3/16" X 7'-6"	A572 GR65	2
3	12899-01700-BSP02	BASE PLATE, Ø73" X 2 1/2"	A572 GR50	1
4	12899-01700-PLT01	PLATE, 1'-0" X 1'-0" X 1 1/2"	A572 GR50	2
5	43029	NUT, HEX, 1/2-13, BLK, A563 DH	A563-DH	6

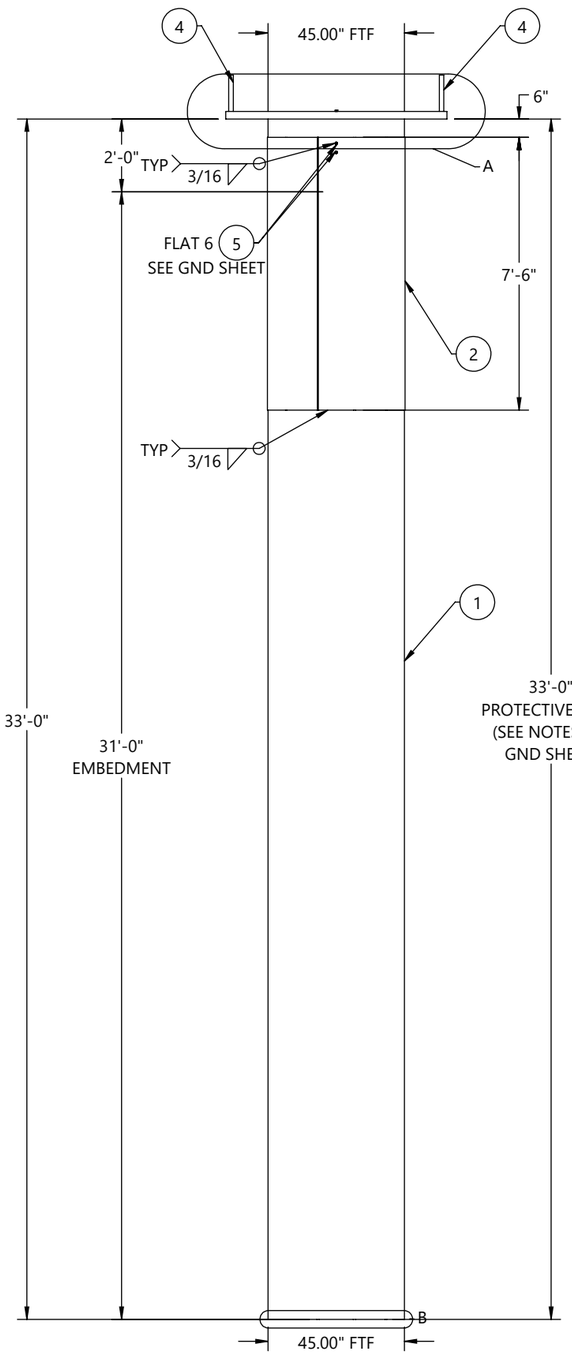

FRONT VIEW
(LOOKING @ 0° REF
ORIENTATION DETAIL)

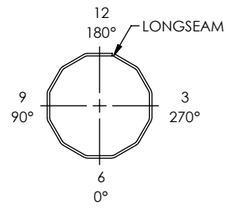

ORIENTATION DETAIL
TOP VIEW

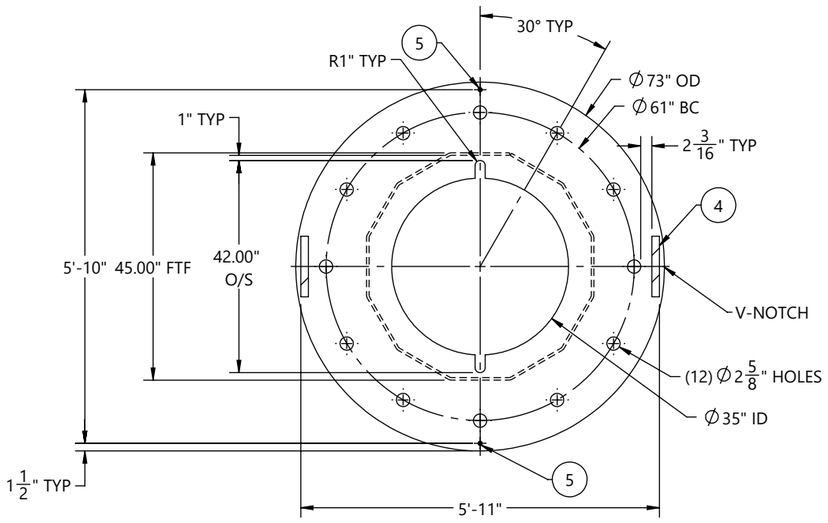

SECTION F-F

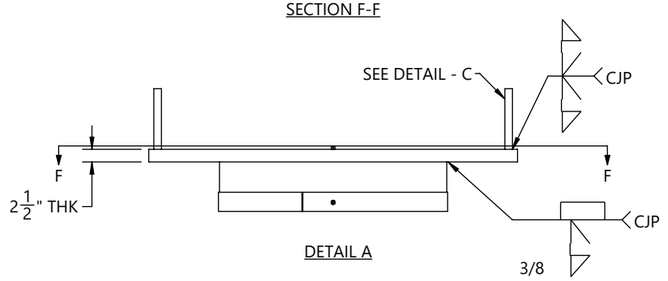

DETAIL A

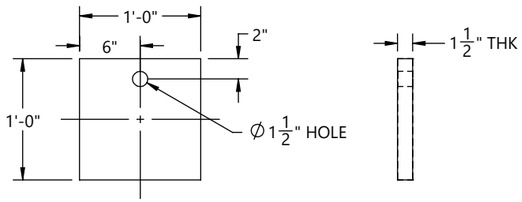

DETAIL - C
12899-01700-PLT01

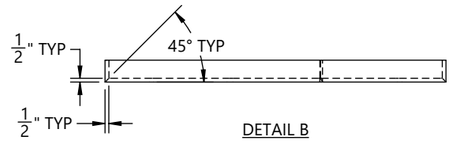

DETAIL B

BY	DATE
DRAWN: MP	06/26/2026
CHK'D: EV	06/26/2026

REV.	ECR #	DESCRIPTION	APPROVED BY	DATE
1		SUBMITTAL FOR APPROVAL	EV	07/17/2026

REVISIONS

CHM INDUSTRIES
700 E. McLEROY BLVD
SAGINAW, TEXAS 76179
682.286.0046 PH
682.286.0086 FX
CHMINDUSTRIES.COM

(SEE CHM IND., INC. PROCEDURE CHM-PR-1.7.3-F1 FOR STANDARD TOLERANCES)

QTY: 1 | GLM: (FT-K) 2774.53 | JOB NO. 12899 | PART NO. 12899-01700-CAS | DWG NO. 12899-01700

CUST NAME: GREENVILLE UTILITIES STEEL STRUCTURES- NC

STR #: 1 TYPE/CLASS-HEIGHT: 90'- 0"

DESCRIPTION: CAISSION, 45.00" X 45.00"X 1/2" X 33'-0"

SCALE: NTS DO NOT SCALE DRAWING | REV.: 1 | SHEET: 5 of 7

THIS DWG IS PROPERTY OF CHM INDUSTRIES AND CONTAINS PROPRIETARY INFORMATION WHICH MAY NOT BE COPIED OR REPRODUCED WITHOUT PRIOR WRITTEN CONSENT FROM CHM INDUSTRIES.

SEE GENERAL NOTES AND DETAILS SHEET FOR SUPPLEMENTARY INFORMATION

INDIVIDUAL STRUCTURE BILL OF MATERIALS			
ITEM NO.	PART NUMBER	DESCRIPTION	QTY.
1	12899-01700-BOT	BOTTOM SECTION, 53.00" X 38.81" X 5/16" X 33'-6"	1
1.1	12899-01700-SHB	SHAFT, 12S, 53.00" X 38.81" X 5/16" X 33'-6"	1
1.2	12899-01700-BSP	BASE PLATE, Ø67" X 2 1/2"	1
1.3	B22011	4X4 ID TAG, A588	1
1.4	43026	NUT, HEAVY HEX, 1-8, A563 DH3	4
1.5	43010	NUT, HEAVY HEX, 1/2-13, HDG, A563 DH	1
2	12899-01700-MID	MIDDLE SECTION, 41.76 X 27.57 X 1/4" X 33'-6"	1
2.1	12899-01700-SHM	SHAFT, 12S, 41.76" X 27.57" X 1/4" X 33'-6"	1
2.2	B22011	4X4 ID TAG, A588	1
2.3	43026	NUT, HEAVY HEX, 1-8, A563 DH3	8
2.4	43010	NUT, HEAVY HEX, 1/2-13, HDG, A563 DH	1
2.5	12899-01700-VS209	VANG, OBROUND, 2-SIDED, 38 1/2" X 3" X 5/8"	1
2.6	12899-01700-VS210	VANG, OBROUND, 2-SIDED, 41 7/16" X 3" X 5/8"	1
2.7	12899-01700-VS211	VANG, OBROUND, 2-SIDED, 43 1/8" X 3" X 5/8"	1
2.8	12899-01700-VS212	VANG, OBROUND, 2-SIDED, 44 13/16" X 3" X 5/8"	1
2.9	12899-01700-VS213	VANG, OBROUND, 2-SIDED, 46 15/16" X 3" X 5/8"	1
2.10	12899-01700-VS214	VANG, OBROUND, 2-SIDED, 47 3/16" X 3" X 5/8"	1
3	12899-01700-TOP	TOP SECTION, 29.87" X 16.00" X 3/16" X 32'-9"	1
3.1	12899-01700-SHT	SHAFT, 12S, 29.87" X 16.00" X 3/16" X 32'-9"	1
3.2	12899-01700-TS	TOP STRAP, 15 1/2" X 2" X 3/16"	1
3.3	12899-01700-VS201	VANG, OBROUND, 2-SIDED, 25 3/16" X 3" X 5/8"	1
3.4	12899-01700-VS202	VANG, OBROUND, 2-SIDED, 25 7/16" X 3" X 5/8"	1
3.5	12899-01700-VS203	VANG, OBROUND, 2-SIDED, 28 5/8" X 3" X 3/4"	1
3.6	12899-01700-VS204	VANG, OBROUND, 2-SIDED, 29" X 3" X 3/4"	1
3.7	12899-01700-VS205	VANG, OBROUND, 2-SIDED, 32" X 3" X 3/4"	1
3.8	12899-01700-VS206	VANG, OBROUND, 2-SIDED, 32 7/16" X 3" X 3/4"	1
3.9	12899-01700-VS207	VANG, OBROUND, 2-SIDED, 35 3/8" X 3" X 3/4"	1
3.10	12899-01700-VS208	VANG, OBROUND, 2-SIDED, 35 13/16" X 3" X 3/4"	1
3.11	B22011	4X4 ID TAG, A588	1
3.12	43026	NUT, HEAVY HEX, 1-8, A563 DH3	4
3.13	43010	NUT, HEAVY HEX, 1/2-13, HDG, A563 DH	1
3.14	43029	NUT, HEX, 1/2-13, BLK, A563 DH	1
3.15	12899-01700-CP	COVER PLATE, Ø17 9/16" X 3/16"	1
3.16	44018	WASHER, FLAT, 1/2", HDG, F436 T1	1
3.17	42120	BOLT, 1/2-13 X 1-3/4", HDG, HH, A307 A	1
4	12899-01700-CAS	CAISSION, 45.00" X 45.00"X 1/2" X 33'-0"	1
4.1	12899-01700-SNG	SINGLE SECTION, 45.00" X 45.00" X 1/2" X 33'-0"	1
4.1.1	12899-01700-SHS	SHAFT, 12S, 45.00" X 45.00" X 1/2" X 33'-0"	1
4.1.2	12899-01700-SHG	GND SLV HALF, 12S, 45.38" X 45.38" X 3/16" X 7'-6"	2
4.1.3	43029	NUT, HEX, 1/2-13, BLK, A563 DH	6
4.1.4	12899-01700-BSP02	BASE PLATE, Ø73" X 2 1/2"	1
4.1.5	12899-01700-PLT01	PLATE, 1'-0" X 1'-0" X 1 1/2"	2
5	43035	NUT, HEAVY HEX, 2 1/4-4.5, HDG, A563 DH	48
6	44070	WASHER, FLAT, 2-1/4", HDG, F436 T1	12
7	12899-01700-AB	ANCHOR BOLT, Ø2 1/4" X 4'-0", A-615	12

BY		DATE
DRAWN:	MP	06/26/2026
CHK'D:	EV	06/26/2026

CHM INDUSTRIES
700 E. McLEROY BLVD
SAGINAW, TEXAS 76179
682.286.0046 PH
682.286.0086 FX
CHMINDUSTRIES.COM

(SEE CHM IND., INC. PROCEDURE CHM-PR-1.7.3-F1 FOR STANDARD TOLERANCES)

QTY: 1 | GLM: (FT-K) 2774.53 | JOB NO. 12899 | PART NO. 12899-01700-SBOM | DWG NO. 12899-01700

CUST NAME: GREENVILLE UTILITIES STEEL STRUCTURES- NC

STR #: 1 TYPE/CLASS-HEIGHT: 90'- 0"

DESCRIPTION: STRUCTURE, 53.00" X 16.00" X 90'-0"

SCALE: NTS DO NOT SCALE DRAWING

REV.: 1 SHEET: 6 of 7

THIS DWG IS PROPERTY OF CHM INDUSTRIES AND CONTAINS PROPRIETARY INFORMATION WHICH MAY NOT BE COPIED OR REPRODUCED WITHOUT PRIOR WRITTEN CONSENT FROM CHM INDUSTRIES.

SEE GENERAL NOTES AND DETAILS SHEET FOR SUPPLEMENTARY INFORMATION

TOTAL JOB MATERIAL REQUIREMENTS

ITEM NO.	PART NUMBER	DESCRIPTION	QTY.	JOB QTY.
1	42120	BOLT, 1/2-13 X 1-3/4", HDG, HH, A307 A	1	1
2	43026	NUT, HEAVY HEX, 1-8, A563 DH3	16	16
3	43029	NUT, HEX, 1/2-13, BLK, A563 DH	7	7
4	44018	WASHER, FLAT, 1/2", HDG, F436 T1	1	1
5	B22011	4X4 ID TAG, A588	3	3
6	12899-01700-VS209	VANG, OBROUND, 2-SIDED, 38 1/2" X 3" X 5/8"	1	1
7	12899-01700-CP	COVER PLATE, Ø17 9/16" X 3/16"	1	1
8	12899-01700-SHB	SHAFT, 12S, 53.00" X 38.81" X 5/16" X 33'-6"	1	1
9	12899-01700-SHM	SHAFT, 12S, 41.76" X 27.57" X 1/4" X 33'-6"	1	1
10	12899-01700-SHT	SHAFT, 12S, 29.87" X 16.00" X 3/16" X 32'-9"	1	1
11	12899-01700-TS	TOP STRAP, 15 1/2" X 2" X 3/16"	1	1
12	43010	NUT, HEAVY HEX, 1/2-13, HDG, A563 DH	3	3
13	12899-01700-BSP	BASE PLATE, Ø67" X 2 1/2"	1	1
14	12899-01700-VS210	VANG, OBROUND, 2-SIDED, 41 7/16" X 3" X 5/8"	1	1
15	12899-01700-VS211	VANG, OBROUND, 2-SIDED, 43 1/8" X 3" X 5/8"	1	1
16	12899-01700-VS212	VANG, OBROUND, 2-SIDED, 44 13/16" X 3" X 5/8"	1	1
17	12899-01700-VS213	VANG, OBROUND, 2-SIDED, 46 15/16" X 3" X 5/8"	1	1
18	12899-01700-VS214	VANG, OBROUND, 2-SIDED, 47 3/16" X 3" X 5/8"	1	1
19	12899-01700-VS201	VANG, OBROUND, 2-SIDED, 25 3/16" X 3" X 5/8"	1	1
20	12899-01700-VS202	VANG, OBROUND, 2-SIDED, 25 7/16" X 3" X 5/8"	1	1
21	12899-01700-VS203	VANG, OBROUND, 2-SIDED, 28 5/8" X 3" X 3/4"	1	1
22	12899-01700-VS204	VANG, OBROUND, 2-SIDED, 29" X 3" X 3/4"	1	1
23	12899-01700-VS205	VANG, OBROUND, 2-SIDED, 32" X 3" X 3/4"	1	1
24	12899-01700-VS206	VANG, OBROUND, 2-SIDED, 32 7/16" X 3" X 3/4"	1	1
25	12899-01700-VS207	VANG, OBROUND, 2-SIDED, 35 3/8" X 3" X 3/4"	1	1
26	12899-01700-VS208	VANG, OBROUND, 2-SIDED, 35 13/16" X 3" X 3/4"	1	1
27	12899-01700-SHG	GND SLV HALF, 12S, 45.38" X 45.38" X 3/16" X 7'-6"	2	2
28	12899-01700-SHS	SHAFT, 12S, 45.00" X 45.00" X 1/2" X 33'-0"	1	1
29	12899-01700-BSP02	BASE PLATE, Ø73" X 2 1/2"	1	1
30	12899-01700-PLT01	PLATE, 1'-0" X 1'-0" X 1 1/2"	2	2
31	43035	NUT, HEAVY HEX, 2 1/4-4.5, HDG, A563 DH	48	48
32	44070	WASHER, FLAT, 2-1/4", HDG, F436 T1	12	12
33	12899-01700-AB	ANCHOR BOLT, Ø2 1/4" X 4'-0", A-615	12	12

BY	DATE
DRAWN: MP	06/26/2026
CHK'D: EV	06/26/2026

CHM INDUSTRIES
700 E. McLEROY BLVD
SAGINAW, TEXAS 76179
682.286.0046 PH
682.286.0086 FX
CHMINDUSTRIES.COM

(SEE CHM IND., INC. PROCEDURE CHM-PR-1.7.3-F1 FOR STANDARD TOLERANCES)

QTY: 1 | GLM: (FT-K) 2774.53 | JOB NO. 12899 | PART NO. 12899-01700-PBOM | DWG NO. 12899-01700

CUST NAME: GREENVILLE UTILITIES STEEL STRUCTURES- NC

STR #: 1 TYPE/CLASS-HEIGHT: 90'- 0"

DESCRIPTION: STRUCTURE, 53.00" X 16.00" X 90'-0"

SCALE: NTS DO NOT SCALE DRAWING | REV. 1 | SHEET: 7 of 7

THIS DWG IS PROPERTY OF CHM INDUSTRIES AND CONTAINS PROPRIETARY INFORMATION WHICH MAY NOT BE COPIED OR REPRODUCED WITHOUT PRIOR WRITTEN CONSENT FROM CHM INDUSTRIES.

FINISH:	BLACK WEIGHT	GALVANIZED WEIGHT
GALVANIZED	10753 LBS	11398 LBS
WEIGHTS ABOVE INCLUDE ALL BOM ITEMS		

SEE GENERAL NOTES AND DETAILS SHEET FOR SUPPLEMENTARY INFORMATION

ITEM #	PART #	DESCRIPTION	QTY.
1	12899-01800-BOT	BOTTOM SECTION, 34.19" X 31.84" X 5/16" X 8'-9"	1
2	12899-01800-MID	MIDDLE SECTION, 33.87 X 26.36 X 5/16" X 28'-0"	1
3	12899-01800-TOP	TOP SECTION, 28.06" X 16.00" X 1/4" X 45'-0"	1

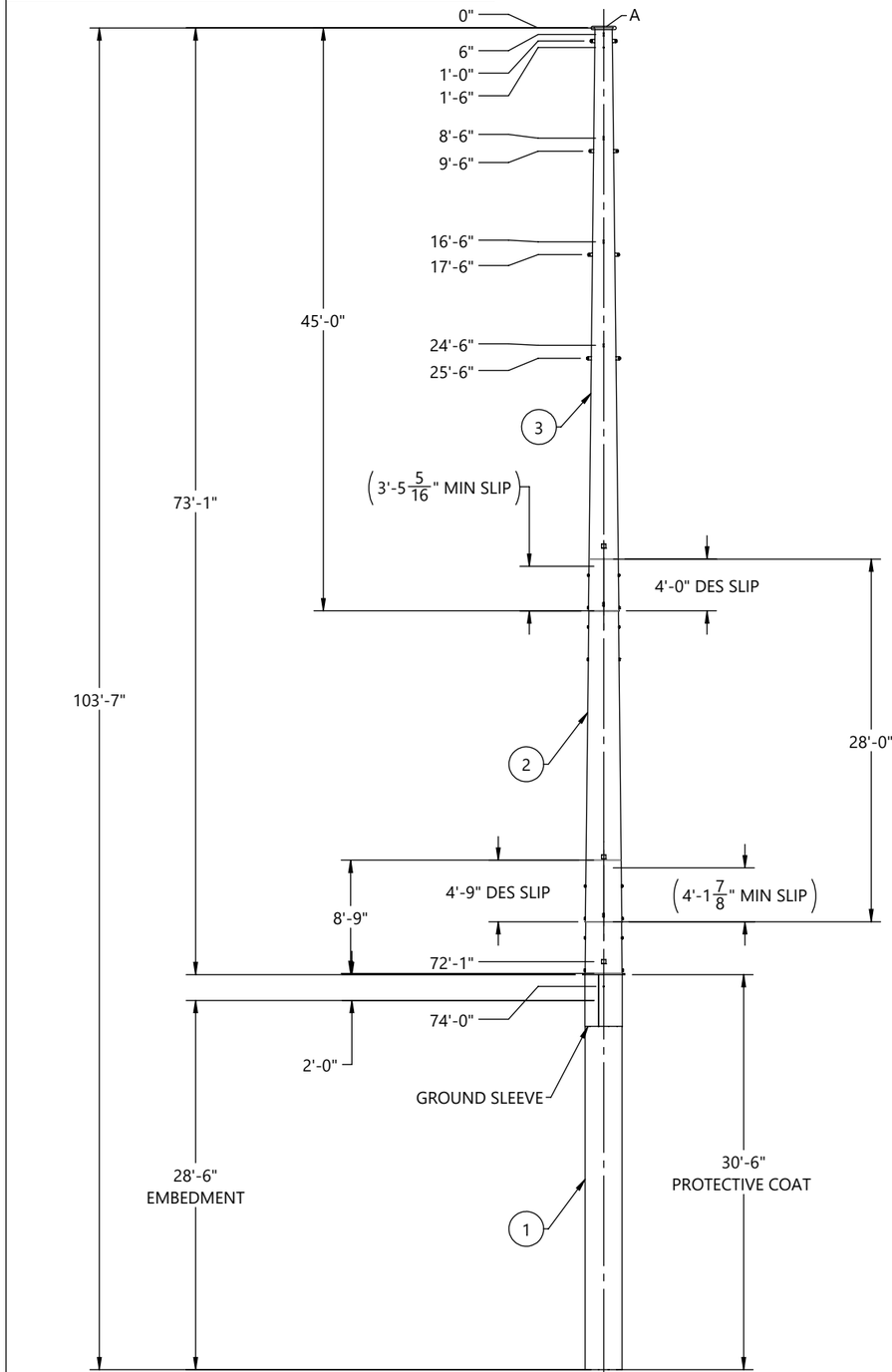

FRONT VIEW
(LOOKING @ 0° REF
ORIENTATION DETAIL)

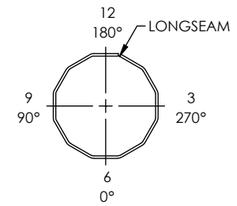

ORIENTATION DETAIL
TOP VIEW

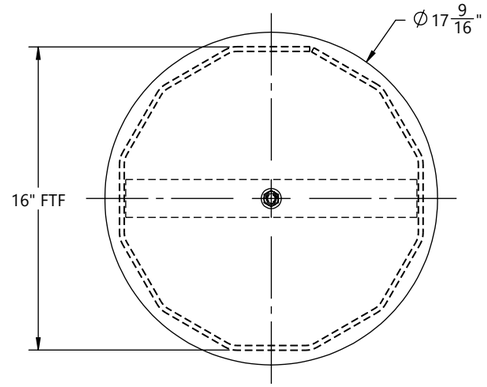

SECTION B-B

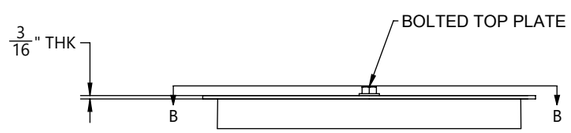

DETAIL A

BY		DATE
DRAWN:	KR	07/17/2026
CHK'D:	EV	07/17/2026

REV.	ECR #	DESCRIPTION	APPROVED BY	DATE
1		SUBMITTAL FOR APPROVAL	EV	07/17/2026

REVISIONS

CHM INDUSTRIES
700 E. McLEROY BLVD
SAGINAW, TEXAS 76179
682.286.0046 PH
682.286.0086 FX
CHMINDUSTRIES.COM

(SEE CHM IND., INC. PROCEDURE CHM-PR-1.7.3-F1 FOR STANDARD TOLERANCES)

QTY: 1 | GLM: (FT-K) 1422.89 | JOB NO. 12899 | PART NO. 12899-01800-MN | DWG NO. 12899-01800

CUST NAME: GREENVILLE UTILITIES STEEL STRUCTURES- NC

STR #: 1A TYPE/CLASS-HEIGHT: S20-75'-0"

DESCRIPTION: STRUCTURE, 34.19" X 16.00" X 73'-0"

SCALE: NTS DO NOT SCALE DRAWING

REV. 1 | SHEET: 1 of 6

THIS DWG IS PROPERTY OF CHM INDUSTRIES AND CONTAINS PROPRIETARY INFORMATION WHICH MAY NOT BE COPIED OR REPRODUCED WITHOUT PRIOR WRITTEN CONSENT FROM CHM INDUSTRIES.

FINISH:	BLACK WEIGHT	GALVANIZED WEIGHT
GALVANIZED	5093 LBS	5399 LBS
WEIGHTS ABOVE INCLUDE ALL BOM ITEMS		

SEE GENERAL NOTES AND DETAILS SHEET FOR SUPPLEMENTARY INFORMATION

ITEM #	PART #	DESCRIPTION	MAT'L	QTY.
1	12899-01800-SHB	SHAFT, 12S, 34.19" X 31.84" X 5/16" X 8'-9"	A572 GR65	1
2	12899-01800-CAS-SHS	SHAFT, 12S, 34.19" X 34.19" X 5/16" X 30'-6"	A572 GR65	1
3	12899-01800-CAS-SHG	GND SLV HALF, 12S, 34.57" X 34.57" X 3/16" X 4'-0"	A572 GR65	2
4	12899-01800-PLT	SPLICE PLATE, Ø39 1/16" X 1"	A572 GR65	1
5	12899-01800-EAR	DRIVING EAR 1'-0" X 1'-3 1/8" X 1"	A572 GR65	2
6	43026	NUT, HEAVY HEX, 1-8, A563 DH3	A563-DH3	4
7	B22011	4X4 ID TAG, A588	A588	1
8	43010	NUT, HEAVY HEX, 1/2-13, HDG, A563 DH	A563-DH	1

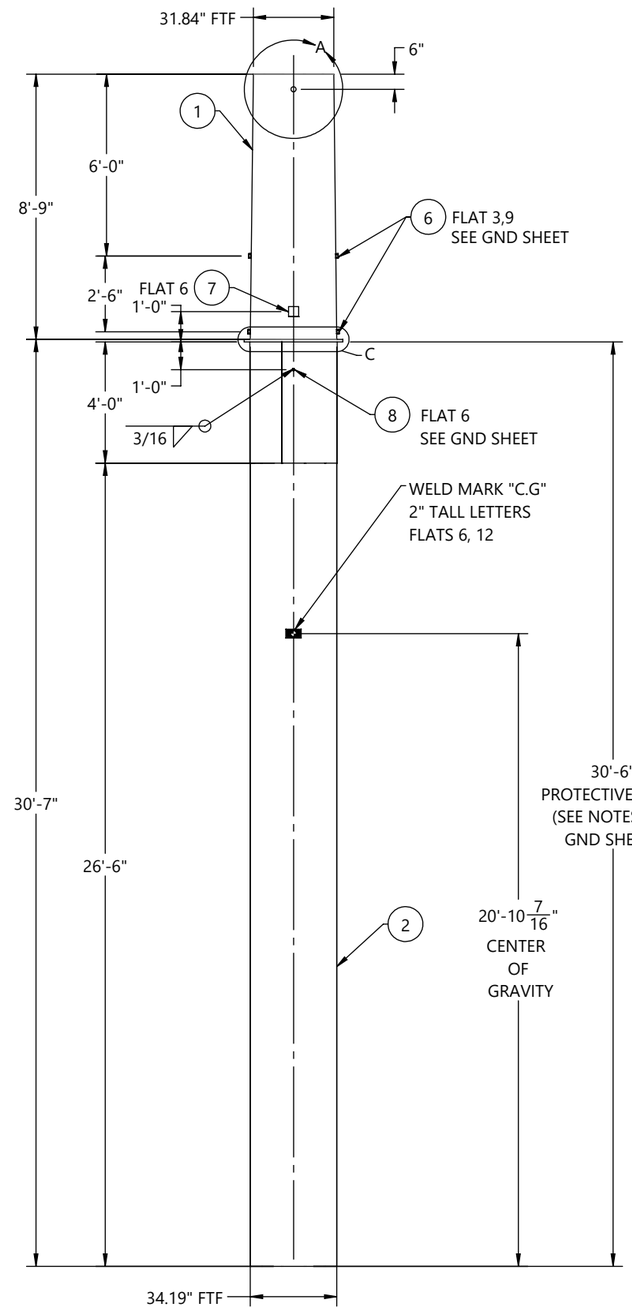

FRONT VIEW
(LOOKING @ 0° REF
ORIENTATION DETAIL)

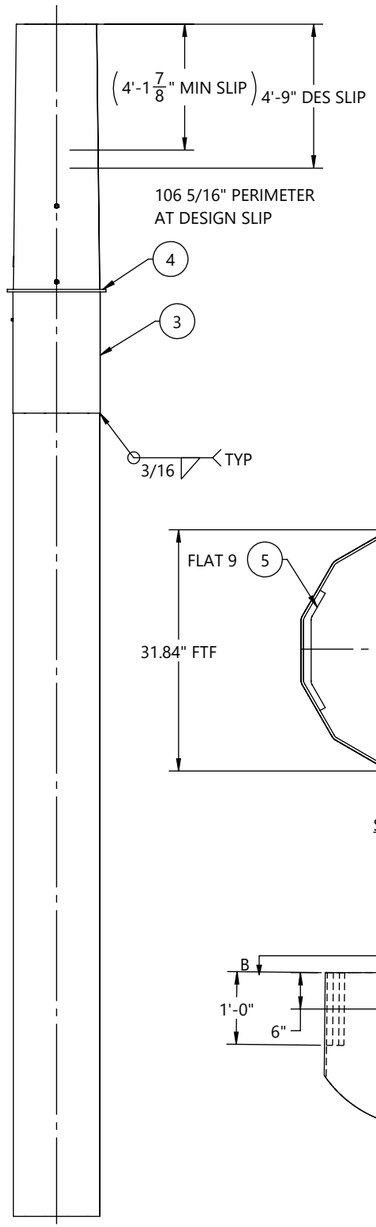

SIDE VIEW
(LOOKING @ 270° REF
ORIENTATION DETAIL)

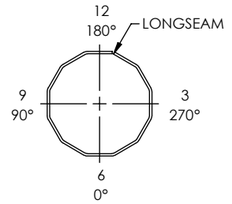

ORIENTATION DETAIL
TOP VIEW

GREENVILLE UTILITIES STEEL STRUCTURES- NC
STR#: 1A, S20-75'-0"
GLM: 1422.89 FT-K
STR WT: 11398 LBS
SEC WT: 5399 LBS
DOM: [mm/YYYY]
CHM-12899-01800
12899-01800-BOT

ID TAG

TEXT TO BE 7/16" LETTERS
TAGS TO BE ORIENTED ON 0° FLAT
WEIGHT ON ID TAG IS FINISHED GALV. WEIGHT

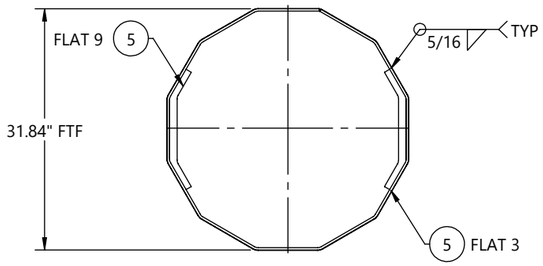

SECTION B-B

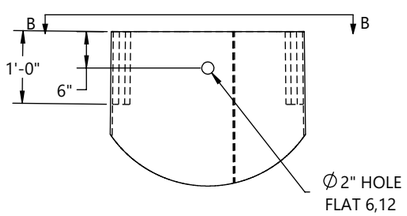

DETAIL A

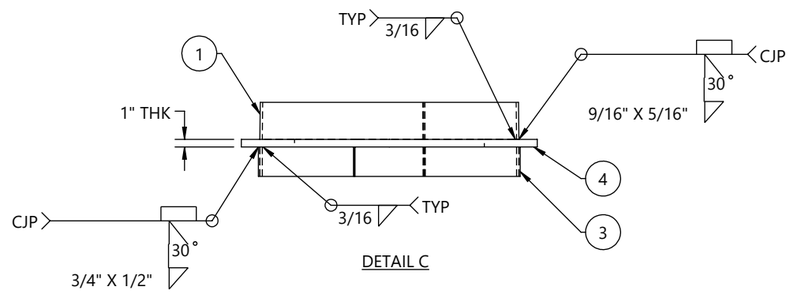

DETAIL C

REV.	ECR #	DESCRIPTION	APPROVED BY	DATE
1		SUBMITTAL FOR APPROVAL	EV	07/17/2026

REVISIONS

BY		DATE
DRAWN:	KR	07/17/2026
CHK'D:	EV	07/17/2026

CHM INDUSTRIES
700 E. McLEROY BLVD
SAGINAW, TEXAS 76179
682.286.0046 PH
682.286.0086 FX
CHMINDUSTRIES.COM

(SEE CHM IND., INC. PROCEDURE CHM-PR-1.7.3-F1 FOR STANDARD TOLERANCES)

QTY: 1 | GLM: (FT-K) 1422.89 | JOB NO. 12899 | PART NO. 12899-01800-BOT | DWG NO. 12899-01800

CUST NAME: GREENVILLE UTILITIES STEEL STRUCTURES- NC
STR #: 1A
TYPE/CLASS-HEIGHT: S20-75'-0"
DESCRIPTION: BOTTOM SECTION, 34.19" X 31.84" X 5/16" X 8'-9"

SCALE: NTS
DO NOT SCALE DRAWING
REV: 1
SHEET: 2 of 6

THIS DWG IS PROPERTY OF CHM INDUSTRIES AND CONTAINS PROPRIETARY INFORMATION WHICH MAY NOT BE COPIED OR REPRODUCED WITHOUT PRIOR WRITTEN CONSENT FROM CHM INDUSTRIES.

FINISH:	BLACK WEIGHT	GALVANIZED WEIGHT
GALVANIZED	2843 LBS	3014 LBS
WEIGHTS ABOVE INCLUDE ALL BOM ITEMS		

SEE GENERAL NOTES AND DETAILS SHEET FOR SUPPLEMENTARY INFORMATION

ITEM #	PART #	DESCRIPTION	MAT'L	QTY.
1	12899-01800-SHM	SHAFT, 12S, 33.87" X 26.36" X 5/16" X 28'-0"	A572 GR65	1
2	43026	NUT, HEAVY HEX, 1-8, A563 DH3	A563-DH3	8
3	B22011	4X4 ID TAG, A588	A588	1

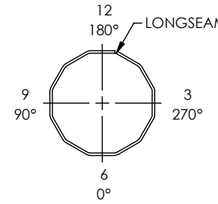

ORIENTATION DETAIL
TOP VIEW

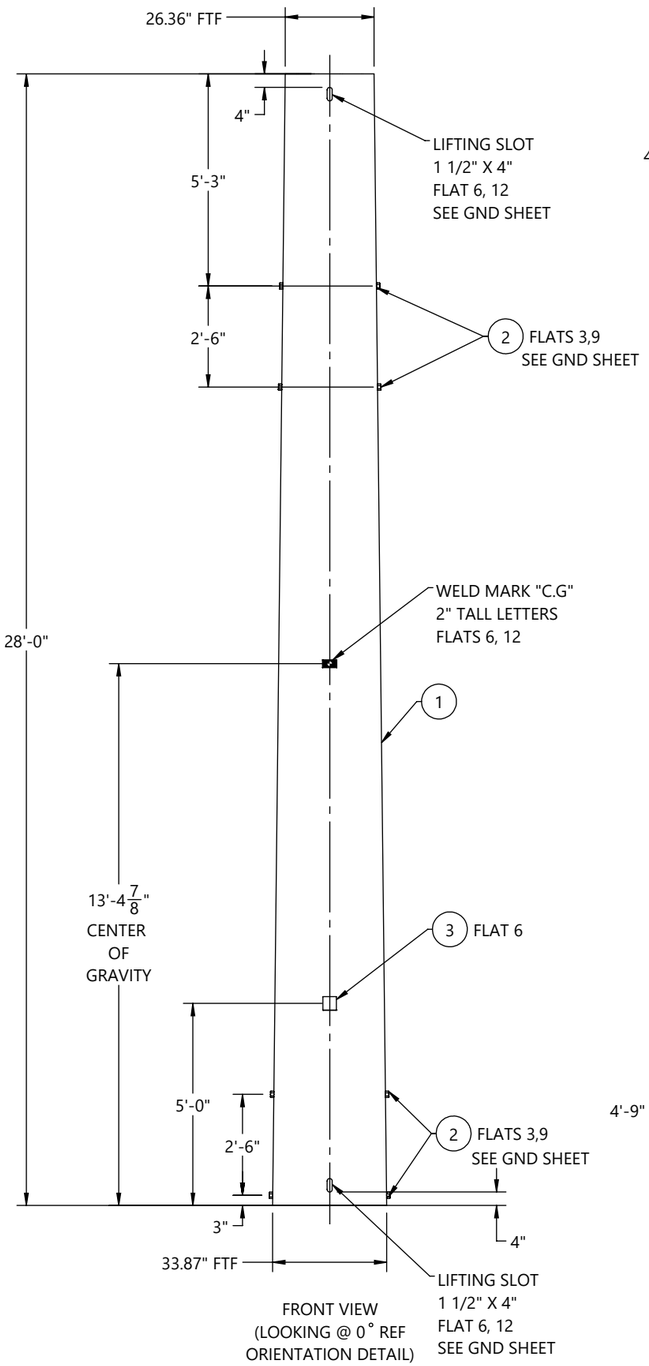

FRONT VIEW
(LOOKING @ 0° REF
ORIENTATION DETAIL)

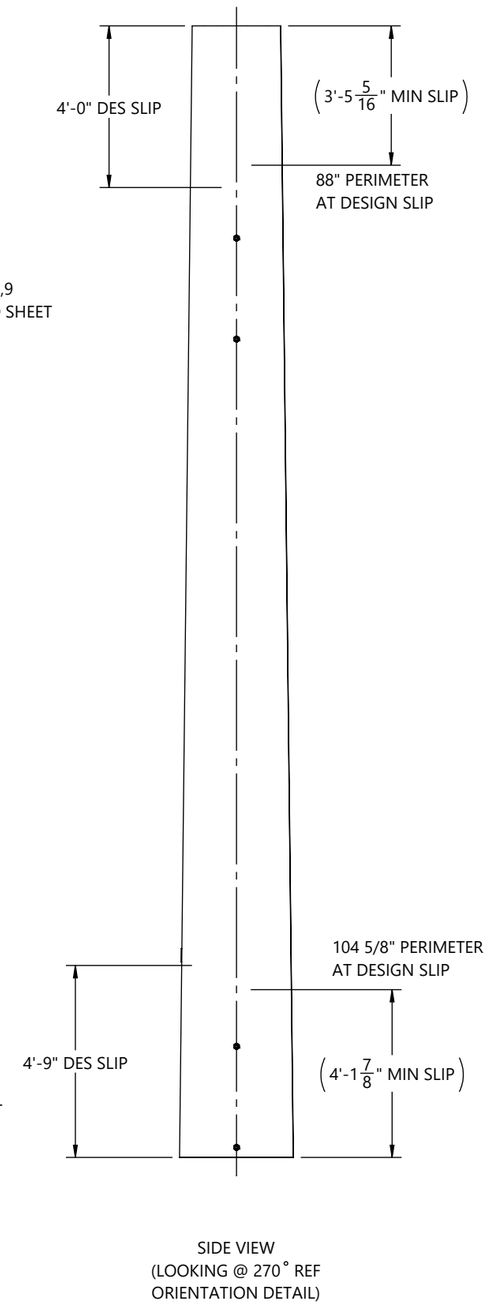

SIDE VIEW
(LOOKING @ 270° REF
ORIENTATION DETAIL)

GREENVILLE UTILITIES STEEL STRUCTURES- NC
STR#: 1A, S20-75'-0"
SEC WT: 3014 LBS
DOM: [mm/YYYY]
CHM-12899-01800
12899-01800-MID

ID TAG

TEXT TO BE 7/16" LETTERS
TAGS TO BE ORIENTED ON 0° FLAT
WEIGHT ON ID TAG IS FINISHED GALV. WEIGHT

BY		DATE
DRAWN:	KR	07/17/2026
CHK'D:	EV	07/17/2026

REV.	ECR #	DESCRIPTION	APPROVED BY	DATE
1		SUBMITTAL FOR APPROVAL	EV	07/17/2026

REVISIONS

CHM INDUSTRIES
700 E. McLEROY BLVD
SAGINAW, TEXAS 76179
682.286.0046 PH
682.286.0086 FX
CHMINDUSTRIES.COM

(SEE CHM IND., INC. PROCEDURE CHM-PR-1.7.3-F1 FOR STANDARD TOLERANCES)

QTY: 1 | GLM: (FT-K) 1422.89 | JOB NO. 12899 | PART NO. 12899-01800-MID | DWG NO. 12899-01800

CUST NAME: GREENVILLE UTILITIES STEEL STRUCTURES- NC
STR #: 1A TYPE/CLASS-HEIGHT: S20-75'-0"
DESCRIPTION: MIDDLE SECTION, 33.87 X 26.36 X 5/16" X 28'-0"

SCALE: NTS
DO NOT SCALE DRAWING
REV. 1 | SHEET: 3 of 6

THIS DWG IS PROPERTY OF CHM INDUSTRIES AND CONTAINS PROPRIETARY INFORMATION WHICH MAY NOT BE COPIED OR REPRODUCED WITHOUT PRIOR WRITTEN CONSENT FROM CHM INDUSTRIES.

FINISH:	BLACK WEIGHT	GALVANIZED WEIGHT
GALVANIZED	2816 LBS	2985 LBS
WEIGHTS ABOVE INCLUDE ALL BOM ITEMS		

SEE GENERAL NOTES AND DETAILS SHEET FOR SUPPLEMENTARY INFORMATION

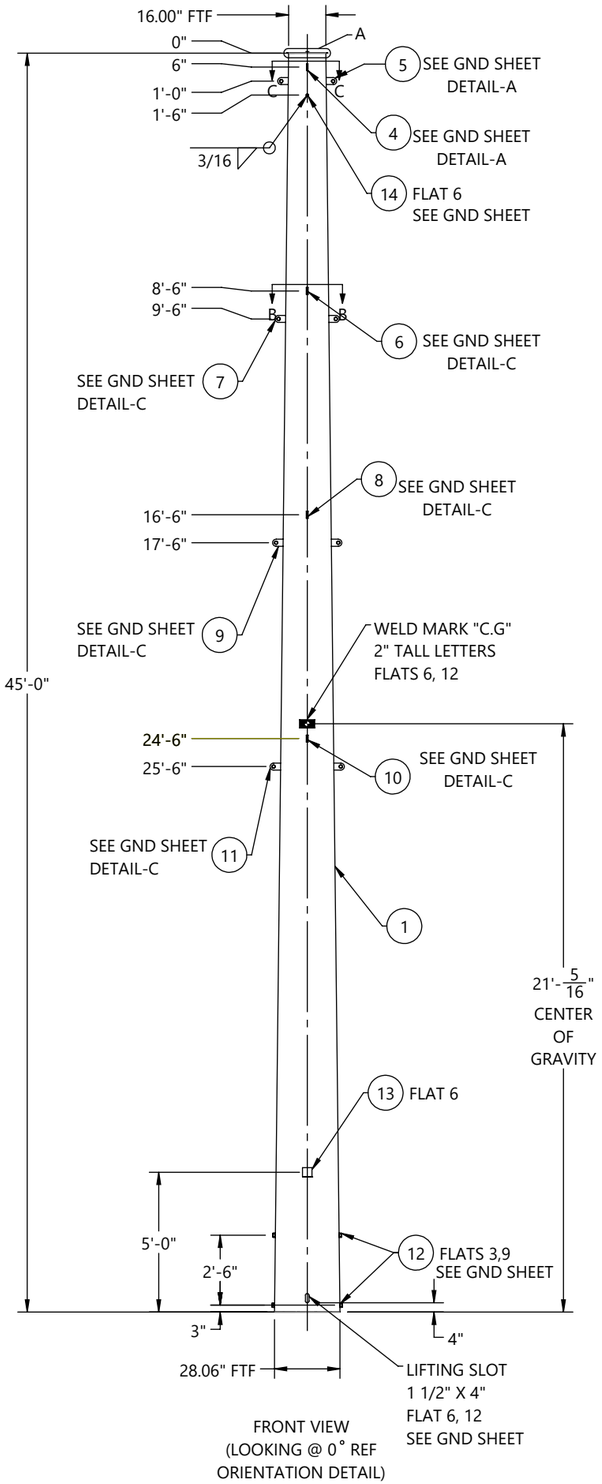

FRONT VIEW
(LOOKING @ 0° REF ORIENTATION DETAIL)

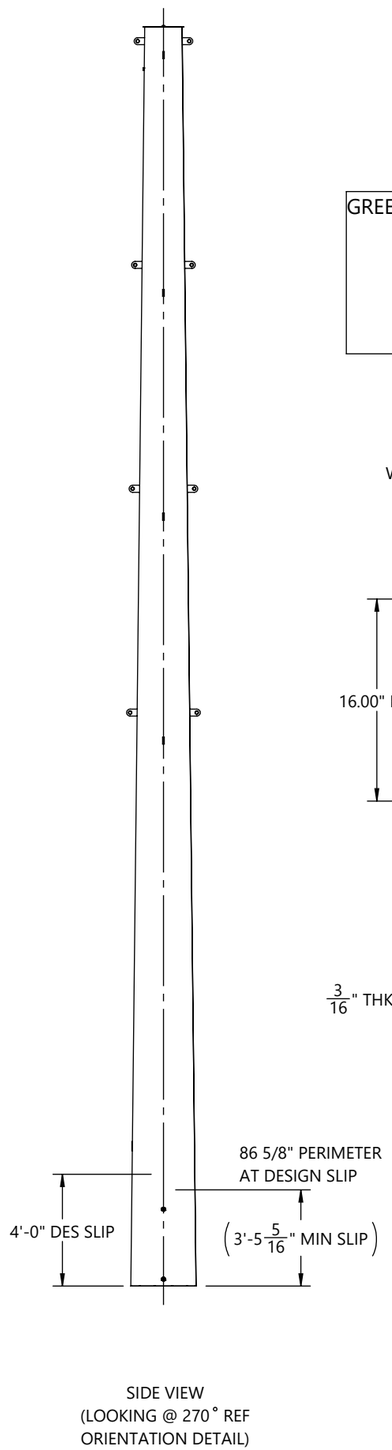

SIDE VIEW
(LOOKING @ 270° REF ORIENTATION DETAIL)

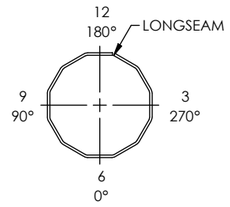

ORIENTATION DETAIL
TOP VIEW

GREENVILLE UTILITIES STEEL STRUCTURES- NC
STR#: 1A, S20-75'-0"
SEC WT: 2985 LBS
DOM: [mm/YYYY]
CHM-12899-01800
12899-01800-TOP

ID TAG

TEXT TO BE 7/16" LETTERS
TAGS TO BE ORIENTED ON 0° FLAT
WEIGHT ON ID TAG IS FINISHED GALV. WEIGHT

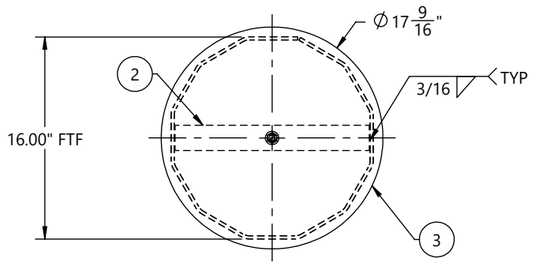

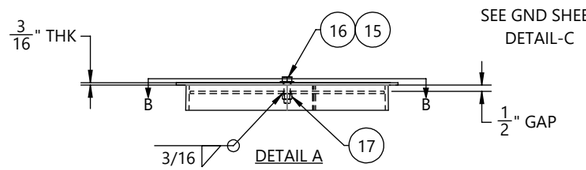

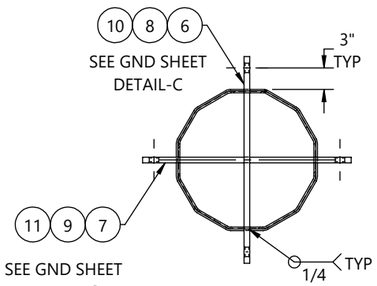

SECTION B-B
TYP 3 PLACES

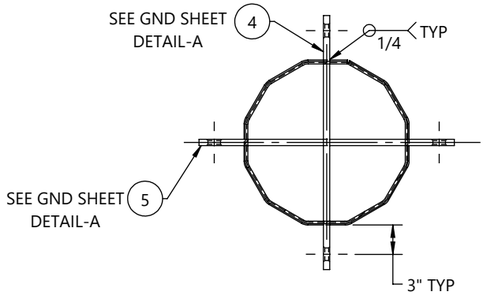

SECTION C-C

ITEM #	PART #	DESCRIPTION	MAT'L	QTY.
1	12899-01800-SHT	SHAFT, 12S, 28.06" X 16.00" X 1/4" X 45'-0"	A572 GR65	1
2	12899-01800-TS	TOP STRAP, 15 3/8" X 2" X 3/16"	A572 GR65	1
3	12899-01800-CP	COVER PLATE, Ø17 9/16" X 3/16"	A572 GR65	1
4	12899-01800-VS201	VANG, OBROUND, 2-SIDED, 25 1/8" X 3" X 5/8"	A572 GR65	1
5	12899-01800-VS202	VANG, OBROUND, 2-SIDED, 25 1/4" X 3" X 5/8"	A572 GR65	1
6	12899-01800-VS203	VANG, OBROUND, 2-SIDED, 27 1/4" X 3" X 3/4"	A572 GR65	1
7	12899-01800-VS204	VANG, OBROUND, 2-SIDED, 27 9/16" X 3" X 3/4"	A572 GR65	1
8	12899-01800-VS205	VANG, OBROUND, 2-SIDED, 29 7/16" X 3" X 3/4"	A572 GR65	1
9	12899-01800-VS206	VANG, OBROUND, 2-SIDED, 29 11/16" X 3" X 3/4"	A572 GR65	1
10	12899-01800-VS207	VANG, OBROUND, 2-SIDED, 31 9/16" X 3" X 3/4"	A572 GR65	1
11	12899-01800-VS208	VANG, OBROUND, 2-SIDED, 31 13/16" X 3" X 3/4"	A572 GR65	1
12	43026	NUT, HEAVY HEX, 1-8, A563 DH3	A563-DH3	4
13	B22011	4X4 ID TAG, A588	A588	1
14	43010	NUT, HEAVY HEX, 1/2-13, HDG, A563 DH	A563-DH	1
15	44018	WASHER, FLAT, 1/2", HDG, F436 T1	F436-T1	1
16	42120	BOLT, 1/2-13 X 1-3/4", HDG, HH, A307 A	A307-A	1
17	43029	NUT, HEX, 1/2-13, BLK, A563 DH	A563-DH	1

BY		DATE
DRAWN:	KR	07/17/2026
CHK'D:	EV	07/17/2026

REV.	ECR #	DESCRIPTION	APPROVED BY	DATE
1		SUBMITTAL FOR APPROVAL	EV	07/17/2026

REVISIONS

CHM INDUSTRIES
700 E. McLEROY BLVD
SAGINAW, TEXAS 76179
682.286.0046 PH
682.286.0086 FX
CHMINDUSTRIES.COM

(SEE CHM IND., INC. PROCEDURE CHM-PR-1.7.3-F1 FOR STANDARD TOLERANCES)

QTY: 1 | GLM: (FT-K) 1422.89 | JOB NO. 12899 | PART NO. 12899-01800-TOP | DWG NO. 12899-01800

CUST NAME: GREENVILLE UTILITIES STEEL STRUCTURES- NC
STR #: 1A TYPE/CLASS-HEIGHT: S20-75'-0"
DESCRIPTION: TOP SECTION, 28.06" X 16.00" X 1/4" X 45'-0"

SCALE: NTS DO NOT SCALE DRAWING
REV: 1 SHEET: 4 of 6

THIS DWG IS PROPERTY OF CHM INDUSTRIES AND CONTAINS PROPRIETARY INFORMATION WHICH MAY NOT BE COPIED OR REPRODUCED WITHOUT PRIOR WRITTEN CONSENT FROM CHM INDUSTRIES.

SEE GENERAL NOTES AND DETAILS SHEET FOR SUPPLEMENTARY INFORMATION

INDIVIDUAL STRUCTURE BILL OF MATERIALS			
ITEM NO.	PART NUMBER	DESCRIPTION	QTY.
1	12899-01800-BOT	BOTTOM SECTION, 34.19" X 31.84" X 5/16" X 8'-9"	1
1.1	12899-01800-SHB	SHAFT, 12S, 34.19" X 31.84" X 5/16" X 8'-9"	1
1.2	B22011	4X4 ID TAG, A588	1
1.3	43026	NUT, HEAVY HEX, 1-8, A563 DH3	4
1.4	ASSY-01800-CAS-MN	STRUCTURE, 34.19" X 34.19" X 30'-6"	1
1.4.1	ASSY-01800-CAS-SNG	SINGLE SECTION, 34.19" X 34.19" X 5/16" X 30'-6"	1
1.4.1.1	12899-01800-CAS-SHS	SHAFT, 12S, 34.19" X 34.19" X 5/16" X 30'-6"	1
1.4.1.2	12899-01800-CAS-SHG	GND SLV HALF, 12S, 34.57" X 34.57" X 3/16" X 4'-0"	2
1.4.1.3	12899-01800-PLT	SPLICE PLATE, Ø39 1/16" X 1"	1
1.5	12899-01800-EAR	DRIVING EAR 1'-0" X 1'-3 1/8" X 1"	2
1.6	43010	NUT, HEAVY HEX, 1/2-13, HDG, A563 DH	1
2	12899-01800-MID	MIDDLE SECTION, 33.87 X 26.36 X 5/16" X 28'-0"	1
2.1	12899-01800-SHM	SHAFT, 12S, 33.87" X 26.36" X 5/16" X 28'-0"	1
2.2	B22011	4X4 ID TAG, A588	1
2.3	43026	NUT, HEAVY HEX, 1-8, A563 DH3	8
3	12899-01800-TOP	TOP SECTION, 28.06" X 16.00" X 1/4" X 45'-0"	1
3.1	12899-01800-SHT	SHAFT, 12S, 28.06" X 16.00" X 1/4" X 45'-0"	1
3.2	12899-01800-TS	TOP STRAP, 15 3/8" X 2" X 3/16"	1
3.3	12899-01800-VS201	VANG, OBROUND, 2-SIDED, 25 1/8" X 3" X 5/8"	1

INDIVIDUAL STRUCTURE BILL OF MATERIALS			
ITEM NO.	PART NUMBER	DESCRIPTION	QTY.
3.4	B22011	4X4 ID TAG, A588	1
3.5	43026	NUT, HEAVY HEX, 1-8, A563 DH3	4
3.6	43010	NUT, HEAVY HEX, 1/2-13, HDG, A563 DH	1
3.7	12899-01800-CP	COVER PLATE, Ø17 9/16" X 3/16"	1
3.8	44018	WASHER, FLAT, 1/2", HDG, F436 T1	1
3.9	42120	BOLT, 1/2-13 X 1-3/4", HDG, HH, A307 A	1
3.10	12899-01800-VS202	VANG, OBROUND, 2-SIDED, 25 1/4" X 3" X 5/8"	1
3.11	12899-01800-VS203	VANG, OBROUND, 2-SIDED, 27 1/4" X 3" X 3/4"	1
3.12	12899-01800-VS204	VANG, OBROUND, 2-SIDED, 27 9/16" X 3" X 3/4"	1
3.13	43029	NUT, HEX, 1/2-13, BLK, A563 DH	1
3.14	12899-01800-VS205	VANG, OBROUND, 2-SIDED, 29 7/16" X 3" X 3/4"	1
3.15	12899-01800-VS206	VANG, OBROUND, 2-SIDED, 29 11/16" X 3" X 3/4"	1
3.16	12899-01800-VS207	VANG, OBROUND, 2-SIDED, 31 9/16" X 3" X 3/4"	1
3.17	12899-01800-VS208	VANG, OBROUND, 2-SIDED, 31 13/16" X 3" X 3/4"	1

BY		DATE
DRAWN:	KR	07/17/2026
CHK'D:	EV	07/17/2026

CHM INDUSTRIES
700 E. McLEROY BLVD
SAGINAW, TEXAS 76179
682.286.0046 PH
682.286.0086 FX
CHMINDUSTRIES.COM

(SEE CHM IND., INC. PROCEDURE CHM-PR-1.7.3-F1 FOR STANDARD TOLERANCES)

QTY: 1 | GLM: (FT-K) 1422.89 | JOB NO. 12899 | PART NO. 12899-01800-SBOM | DWG NO. 12899-01800

CUST NAME: GREENVILLE UTILITIES STEEL STRUCTURES- NC

STR #: 1A TYPE/CLASS-HEIGHT: S20-75'-0"

DESCRIPTION: STRUCTURE, 34.19" X 16.00" X 73'-0"

SCALE: NTS DO NOT SCALE DRAWING

REV: 1 SHEET: 5 of 6

THIS DWG IS PROPERTY OF CHM INDUSTRIES AND CONTAINS PROPRIETARY INFORMATION WHICH MAY NOT BE COPIED OR REPRODUCED WITHOUT PRIOR WRITTEN CONSENT FROM CHM INDUSTRIES.

SEE GENERAL NOTES AND DETAILS SHEET FOR SUPPLEMENTARY INFORMATION

TOTAL JOB MATERIAL REQUIREMENTS				
ITEM NO.	PART NUMBER	DESCRIPTION	QTY.	JOB QTY.
1	42120	BOLT, 1/2-13 X 1-3/4", HDG, HH, A307 A	1	1
2	43026	NUT, HEAVY HEX, 1-8, A563 DH3	16	16
3	44018	WASHER, FLAT, 1/2", HDG, F436 T1	1	1
4	B22011	4X4 ID TAG, A588	3	3
5	12899-01800-VS201	VANG, OBROUND, 2-SIDED, 25 1/8" X 3" X 5/8"	1	1
6	12899-01800-CP	COVER PLATE, Ø17 9/16" X 3/16"	1	1
7	12899-01800-SHB	SHAFT, 12S, 34.19" X 31.84" X 5/16" X 8'-9"	1	1
8	12899-01800-SHM	SHAFT, 12S, 33.87" X 26.36" X 5/16" X 28'-0"	1	1
9	12899-01800-SHT	SHAFT, 12S, 28.06" X 16.00" X 1/4" X 45'-0"	1	1
10	12899-01800-TS	TOP STRAP, 15 3/8" X 2" X 3/16"	1	1
11	12899-01800-VS202	VANG, OBROUND, 2-SIDED, 25 1/4" X 3" X 5/8"	1	1
12	12899-01800-VS203	VANG, OBROUND, 2-SIDED, 27 1/4" X 3" X 3/4"	1	1
13	12899-01800-VS204	VANG, OBROUND, 2-SIDED, 27 9/16" X 3" X 3/4"	1	1
14	43010	NUT, HEAVY HEX, 1/2-13, HDG, A563 DH	2	2
15	43029	NUT, HEX, 1/2-13, BLK, A563 DH	1	1
16	12899-01800-VS205	VANG, OBROUND, 2-SIDED, 29 7/16" X 3" X 3/4"	1	1
17	12899-01800-VS206	VANG, OBROUND, 2-SIDED, 29 11/16" X 3" X 3/4"	1	1
18	12899-01800-VS207	VANG, OBROUND, 2-SIDED, 31 9/16" X 3" X 3/4"	1	1
19	12899-01800-VS208	VANG, OBROUND, 2-SIDED, 31 13/16" X 3" X 3/4"	1	1
20	12899-01800-CAS-SHS	SHAFT, 12S, 34.19" X 34.19" X 5/16" X 30'-6"	1	1
21	12899-01800-CAS-SHG	GND SLV HALF, 12S, 34.57" X 34.57" X 3/16" X 4'-0"	2	2
22	12899-01800-PLT	SPLICE PLATE, Ø39 1/16" X 1"	1	1
23	12899-01800-EAR	DRIVING EAR 1'-0" X 1'-3 1/8" X 1"	2	2

BY		DATE
DRAWN:	KR	07/17/2026
CHK'D:	EV	07/17/2026

CHM INDUSTRIES
700 E. McLEROY BLVD
SAGINAW, TEXAS 76179
682.286.0046 PH
682.286.0086 FX
CHMINDUSTRIES.COM

(SEE CHM IND., INC. PROCEDURE CHM-PR-1.7.3-F1 FOR STANDARD TOLERANCES)

QTY: 1 | GLM: (FT-K) 1422.89 | JOB NO. 12899 | PART NO. 12899-01800-PBOM | DWG NO. 12899-01800

CUST NAME: GREENVILLE UTILITIES STEEL STRUCTURES- NC

STR #: 1A TYPE/CLASS-HEIGHT: S20-75'-0"

DESCRIPTION: STRUCTURE, 34.19" X 16.00" X 73'-0"

SCALE: NTS DO NOT SCALE DRAWING | REV: 1 | SHEET: 6 of 6

THIS DWG IS PROPERTY OF CHM INDUSTRIES AND CONTAINS PROPRIETARY INFORMATION WHICH MAY NOT BE COPIED OR REPRODUCED WITHOUT PRIOR WRITTEN CONSENT FROM CHM INDUSTRIES.

700 E. McLEROY BLVD
SAGINAW, TEXAS 76179
682.286.0046 PH
682.286.0086 FX
CHMINDUSTRIES.COM

JOB #: 12899

ARM DETAILS

FINISH:	BLACK WEIGHT	GALVANIZED WEIGHT
GALVANIZED	279 LBS	296 LBS
WEIGHTS ABOVE INCLUDE ALL BOM ITEMS		

SEE GENERAL NOTES AND DETAILS SHEET FOR SUPPLEMENTARY INFORMATION

GREENVILLE UTILITIES STEEL STRUCTURES- NC
STR#: SEE TABLE
WT: 296 LBS
DOM: [mm/YYYY]
CHM-12899-00002-ARM

LINE	STR#	QTY.
12899-00600-MN	48	4
12899-00700-MN	49	4

ID TAG
TEXT TO BE 7/16" LETTERS
TAGS TO BE ORIENTED ON 0° FLAT

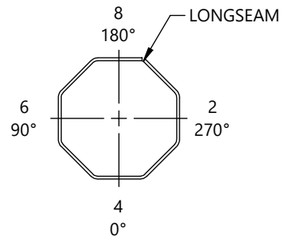

ORIENTATION DETAIL
TOP VIEW

ITEM #	PART #	DESCRIPTION	MAT'L	QTY.
1	12899-00002-SHA	SHAFT, ARM, 8S, 9.00" X 8.50" X 1/4" X 6'-6"	A572 GR65	1
2	12899-00002-AMB	ARM MOUNT BRACKET, 14 1/8" X 12" X 6 3/4" X 1"	A572 GR65	1
3	12899-00002-EP	ARM END PLATE, Ø10 3/16" X 3/4"	A572 GR65	1
4	12899-00002-BKT02	BRACKET, 5 1/2" X 4" X 3" X 1/2"	A572 GR65	2
5	12899-00002-VS201	VANG, OBROUND, 2-SIDED, 17 9/16" X 3" X 3/4"	A572 GR65	1
6	12899-00002-VS202	VANG, OBROUND, 2-SIDED, 17 13/16" X 3" X 3/4"	A572 GR65	1
7	12899-00002-VS101	VANG, OBROUND, 1-SIDED, 3.0 X 2 1/2" X 3/4"	A572 GR65	1
8	43010	NUT, HEAVY HEX, 1/2-13, HDG, A563 DH	A563-DH	2
9	12899-00002-GRT	EXP. METAL, 7 7/8" X 5" X .125"	ASTM A36	1

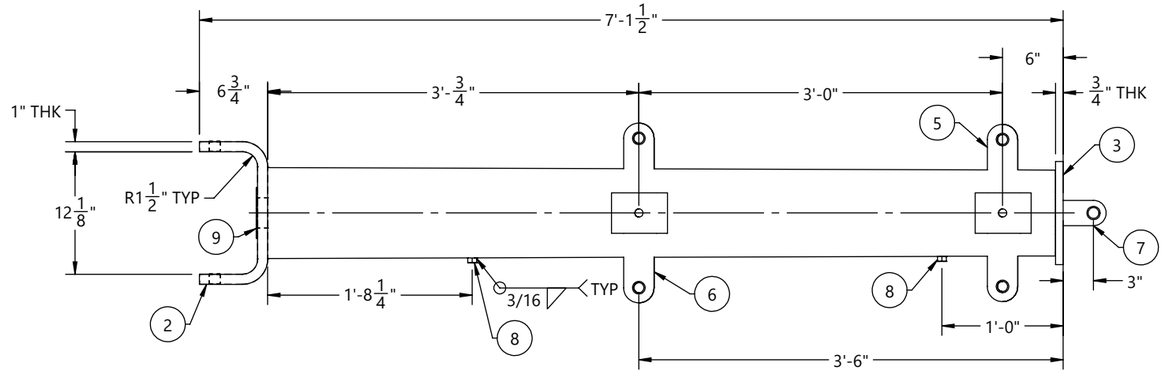

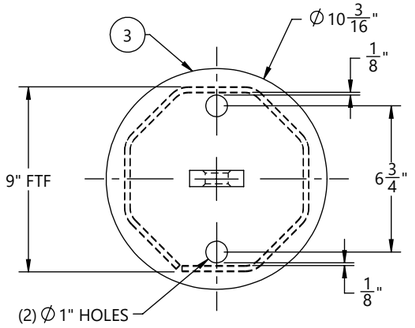

SECTION A-A

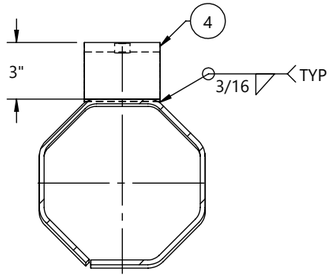

SECTION B-B

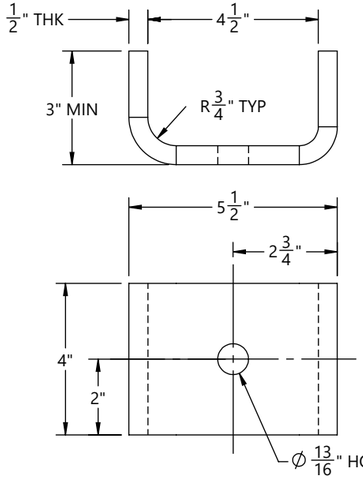

12899-00002-BKT02

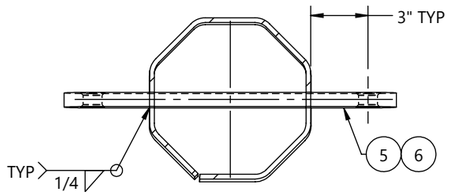

SECTION D-D

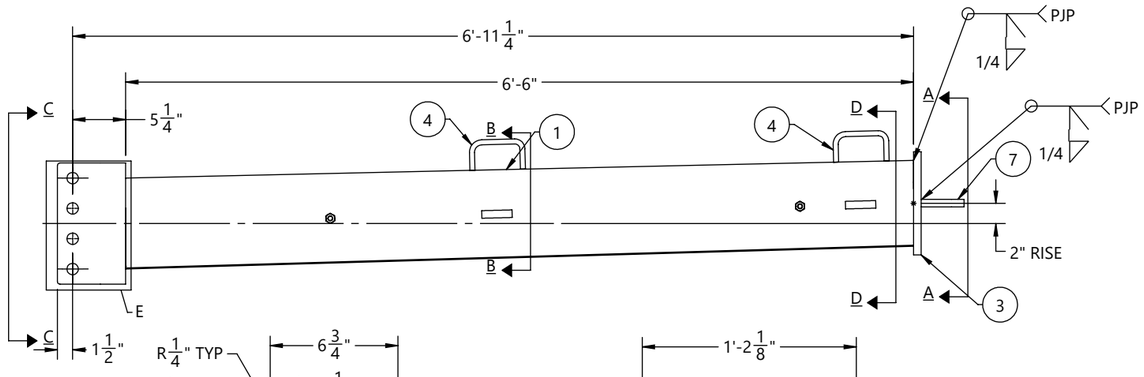

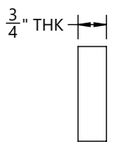

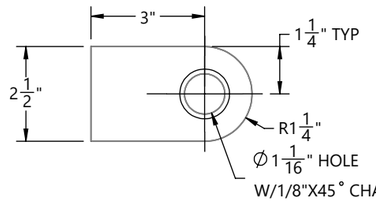

12899-00002-VS101

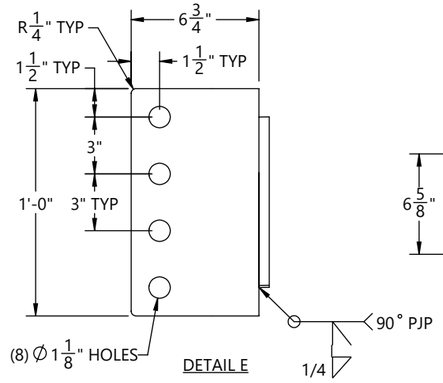

DETAIL E

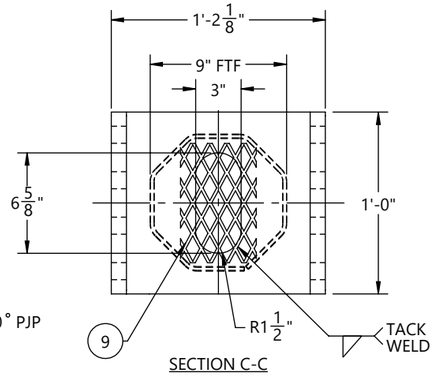

SECTION C-C

REV.	ECR #	DESCRIPTION	APPROVED BY	DATE
1		SUBMITTAL FOR APPROVAL	EV	07/20/2026

REVISIONS

BY	DATE
DRAWN: KPK	06/07/2026
CHK'D: EV	06/07/2026

(SEE CHM IND., INC. PROCEDURE CHM-PR-1.7.3-F1 FOR STANDARD TOLERANCES)

CHM INDUSTRIES
700 E. McLEROY BLVD
SAGINAW, TEXAS 76179
682.286.0046 PH
682.286.0086 FX
CHMINDUSTRIES.COM

QTY: 8 | GLM: (FT-K) | JOB NO. 12899 | PART NO. 12899-00002-ARM- | DWG NO. 12899-00002-ARM

CUST NAME: GREENVILLE UTILITIES STEEL STRUCTURES- NC
STR #: SEE TABLE TYPE/CLASS-HEIGHT:
DESCRIPTION: SHAFT, ARM, 8S, 9.00" X 8.50" X 1/4" X 6'-6"

SCALE: NTS DO NOT SCALE DRAWING
REV. 1 | SHEET: 1 of 1

THIS DWG IS PROPERTY OF CHM INDUSTRIES AND CONTAINS PROPRIETARY INFORMATION WHICH MAY NOT BE COPIED OR REPRODUCED WITHOUT PRIOR WRITTEN CONSENT FROM CHM INDUSTRIES.

Appendix G: Structure #43 Field Drill Drawing

[Balance of Page Left Blank Intentionally]

MATERIALS LIST

STRAND	1/2" IN.	2835	FT.
SPIRAL	3/16" IN.	257	LB.
STR. RINGS		40	LB.
SLACK	1/2"	6	EA.
	192 FT.	200	LB.
INSERTS			
1/2" W/BOLT		20	EA.
5/8"		____	EA.
3/4"		____	EA.
1/2" NYLON W/BOLT		____	EA.
5/8" NYLON W/BOLT		____	EA.
STEP BOLTS	____ IN.	____	EA.
LADDER CLIPS		____	EA.
LADDER LUGS		____	EA.
GND CLIPS	#LARGE	8	EA.
NAME PLATE		1	EA.
2 1/2" X 8 DOOR		____	EA.
4" X 8" DOOR		____	EA.
4" X 8" DOOR W/RUB.CVR.		____	EA.
2" X 4" BLOCKOUT		____	EA.
2 1/2" X 8" BLOCKOUT		____	EA.
4" X 8" BLOCKOUT		____	EA.
4" X 12" BLOCKOUT		____	EA.
6" X 12" BLOCKOUT		____	EA.
WIRE SUPPORT BAR		____	EA.
1" COUPLING		____	EA.
1-1/2" COUPLING		____	EA.
2" COUPLING		____	EA.
TANK GROUND		3	EA.
COPPER WIRE	#____	-X-	FT.
LIGHTNING ROD		____	EA.
LIGHTNING ROD ATT.		____	EA.
SAFETY CABLE		____	FT.
SAFETY CABLE HARDWARE		____	EA.
SAFETY BELT-TOTAL JOB		____	EA.
QUICK STOP -TOTAL JOB		____	EA.
SPECIAL HARDWARE:			

MARK POLES STRUCTURE NUMBERS:
2, 13, 23, 28, 29, 30, 33, 34, 36, 37, 38, 39, 40, 41, 42, 43, 52, 57, 58, 59, 60

NOTE: USE 1/4" SPIRAL WIRE SPACED AT 1-1/4" CENTERS FROM BUTT TO 5' AGL

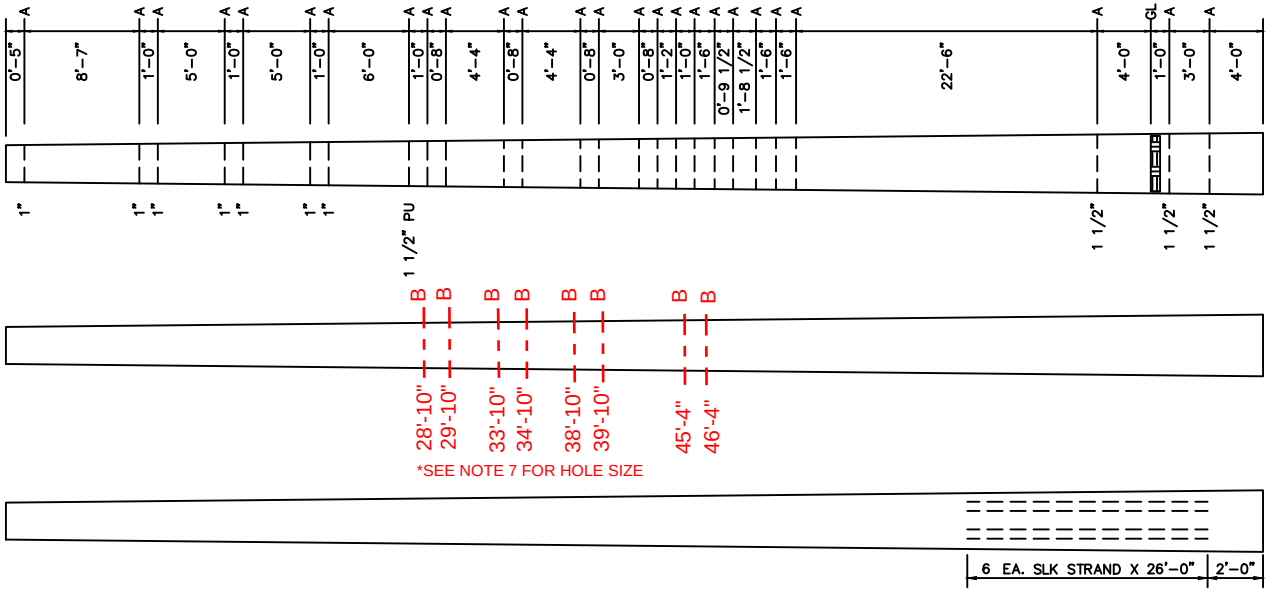

PROVIDE STEP INSERTS ON ALL FOUR FACES APPROXIMATELY 5'-3", 16'-0", 22'-0", 25'-0", 31'-0", 34'-0", 40'-0", 49'-0", 55'-0", 58'-0", 64'-0", 67'-0", AND 73'-0" FROM THE TIP. ALSO, PROVIDE DOUBLE STEPS NEAR FLANGE

NOTES(NEW):
5. ADD DOWN LEAD FROM EXISTING TOP PHASE DISTRIBUTION POST INSULATOR TO NEW TOP DISTRIBUTION X-ARM.
6. NEUTRAL AND FIBER TO BE DEADENDED ON POLE
7. ALL FIELD DRILL HOLES WILL BE 3/4" ∧ HOLES

1. ALL HOLES ARE 3/4" DIA. UNLESS NOTED
2. GROUND CLIPS ON 5'-0" CENTERS TO BUTT
3. PROVIDE VENT HOLES APPROX 10' FROM TIP & 5' AGL
4. MARK STRUCTURE NUMBERS NEAR BUTT & ON NAMEPLATE

valmont UTILITY

PROPERTY OF VALMONT INDUSTRIES INC. THE DESIGN AND DETAILS SHOWN ON THIS DRAWING ARE PROPRIETARY AND CONFIDENTIAL. REPRODUCTION, PUBLICATION OR DISTRIBUTIONS OF THIS DRAWING REQUIRES THE WRITTEN CONSENT OF VALMONT. POSSESSION CONFERS NO LICENSE TO USE OR TO DISCLOSE TO OTHERS FOR ANY PURPOSE WHATSOEVER. IT IS SUBJECT TO RETURN ON DEMAND AND IS LOANED UPON THE EXPRESS CONDITION THAT IT IS NOT TO BE USED DIRECTLY OR INDIRECTLY IN ANY WAY DETRIMENTAL TO THE INTEREST OF VALMONT.

POLE WEIGHT ESTIMATED ON DRAWING FOR ACTUAL WEIGHT SEE NAMEPLATE ON POLE

THRU HOLE ORIENTATION

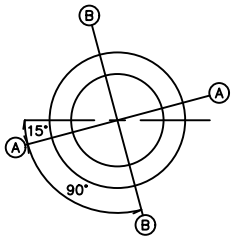

INSERT ORIENTATION

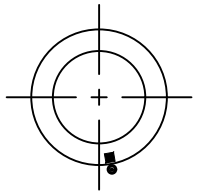

GROUND CLIP INSERTS

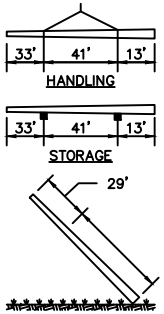

LARGE NAME PLATE

STR. NO.	
TYPE	TANGENT
LENGTH	87'-0"
WEIGHT	22390
CLASS	1012
FABR. NO.	04105-1-1-1...21
MFG. DATE	
CUSTOMER	GREENVILLE UTILITIES

REV	DATE	BY	REMARKS

UTILITY DIVISION, VALMONT INDUSTRIES, INC.

GREENVILLE UTILITIES COMMISSION
WINTERSVILLE - BELLS FORK 115KV T/L

DRAWN BY:	BAM	DATE:	12-7-2004
CHECKED BY:		APPROVED BY:	
POLE LENGTH	87'-0"	EST. WEIGHT LBS.	22,390
O.D. TIP	15.39"	CUBIC YARDS	5.31
O.D. BUTT	34.18"	CONCRETE P.S.I.	10000
TIP THICKNESS	2.50"	ULT. MOMENT K-FT.	1012
BUTT THICKNESS	3.54"	EMBEDMENT	8'-0"
STRAND 30 EA. 1/2"-270KSI		C.G. FROM BUTT	33
PRESTRESS LBS.	17840	TAPER IN./FT.	0.216"/FT
DEBOND 4 AT 10', 4 AT 19'			
SPIRAL WIRE	DIA. = 3/16"		
TIP - 3'-0"	PITCH = 1.25	P.O. NO.	3468
3'-0" - G.L.	PITCH = 3.00	QUANTITY	21
G.L. - BUTT	PITCH = 1.25	FABR. NO.	04105-1-1-1...21

Appendix H: Standard Transmission Pole Framing

[Balance of Page Left Blank Intentionally]

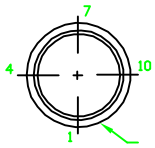

THRU HOLE BORING DETAIL		
DIAMETER	FROM SMALL END	FLAT#
1.00"	0'–6.00"	4
1.00"	8'–0"	4
1.00"	9'–0"	4
1.00"	16'–0"	4
1.00"	17'–0"	4
1.00"	24'–0"	4
1.00"	25'–0"	4

NOTE: DRAWING IS NOT TO SCALE. ALL DIMENSIONS ARE O.C. OF INSULATOR MOUNTS.

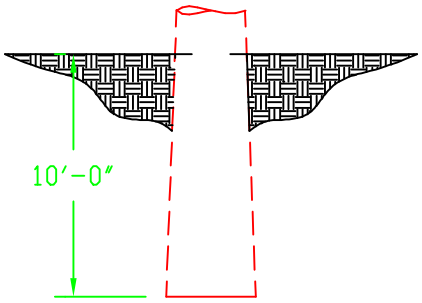

80' STRUCTURE EMBEDMENT

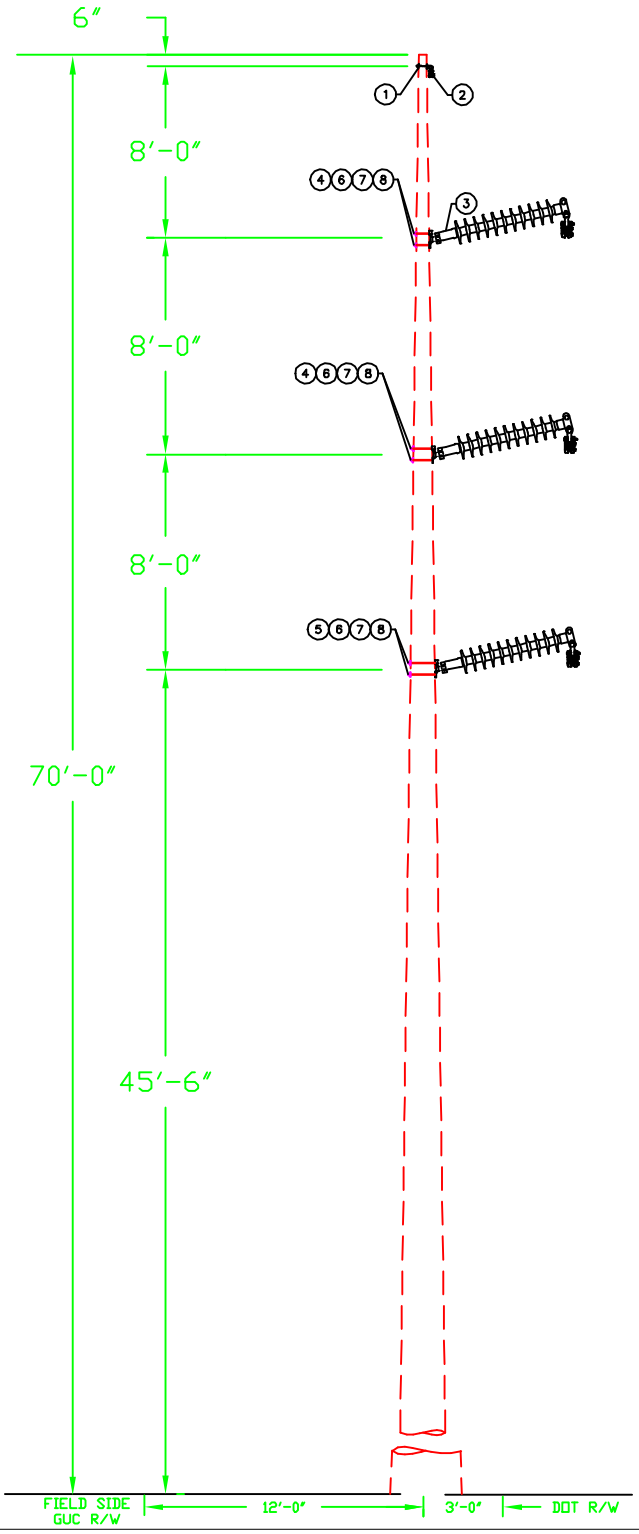

DWG. REF.	LIST OF MATERIALS			
	ea.	DESCRIPTION	ITEM	DET.
1	1	SINGLE BOLT OHGW SUPPORT	–	TM–6A(S)
2	1	OHGW ASSEMBLY, TANGENT	–	TM–4A
3	3	115 KV POST INSULATOR, TANGENT	–	TM–3DM
4	4	BOLT, MACHINE, 3/4" x 14"	–	
5	2	BOLT, MACHINE, 3/4" x 16"	–	
6	6	WASHER, SQUARE, 4" x 4" x 1/4" w/ 15/16"	–	
7	6	SPRING LOCK WASHER, 3/4"	–	
8	6	NUT, 3/4"	–	

GREENVILLE UTILITIES COMMISSION
GREENVILLE, NORTH CAROLINA

Greenville Utilities

115 KV 3 PHASE, VERTICAL STRUCTURE, TANGENT, POST INSULATORS

DWN. JLS		DATE: 03/19/19	
CKD. KW		APPD. KW	
SCALE: N.T.S.			
DATE	REVISION	DATE	REVISION
06/25/21	A		

DWG. NO.

TPV1

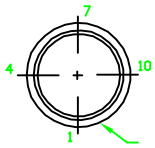

THRU HOLE BORING DETAIL		
DIAMETER	FROM SMALL END	FLAT#
1.00"	0'–6.00"	4
1.00"	8'–0"	4
1.00"	9'–0"	4
1.00"	14'–0"	4
1.00"	15'–0"	4
1.00"	20'–0"	4
1.00"	21'–0"	4

NOTE: DRAWING IS NOT TO SCALE. ALL DIMENSIONS ARE O.C. OF INSULATOR MOUNTS.

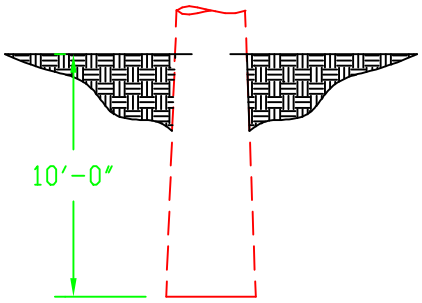

80' STRUCTURE EMBEDMENT

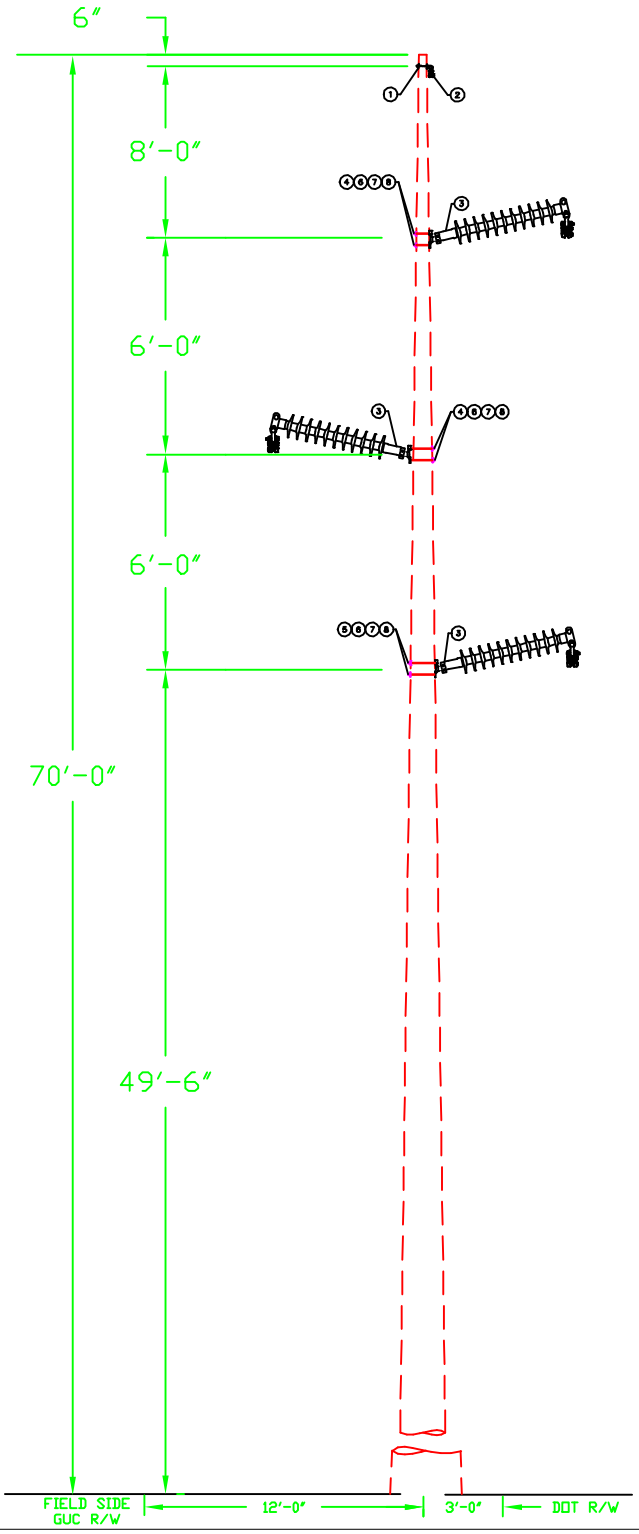

DWG. REF.	LIST OF MATERIALS			
	ea.	DESCRIPTION	ITEM	DET.
1	1	SINGLE BOLT OHGW SUPPORT	–	TM–6A(S)
2	1	OHGW ASSEMBLY, TANGENT	–	TM–4A
3	3	115 KV POST INSULATOR, TANGENT	–	TM–3DM
4	4	BOLT, MACHINE, 3/4" x 14"	–	
5	2	BOLT, MACHINE, 3/4" x 16"	–	
6	6	WASHER, SQUARE, 4" x 4" x 1/4" w/ 15/16"	–	
7	6	SPRING LOCK WASHER, 3/4"	–	
8	6	NUT, 3/4"	–	

GREENVILLE UTILITIES COMMISSION
GREENVILLE, NORTH CAROLINA

Greenville Utilities

115 KV 3 PHASE, Z–FRAME STRUCTURE, TANGENT, POST INSULATORS

DWN. JLS		DATE: 02/26/19	
CKD. KW		APPD. KW	
SCALE: N.T.S.			
DATE	REVISION	DATE	REVISION
06/25/21	A		

DWG. NO.

TPZ1

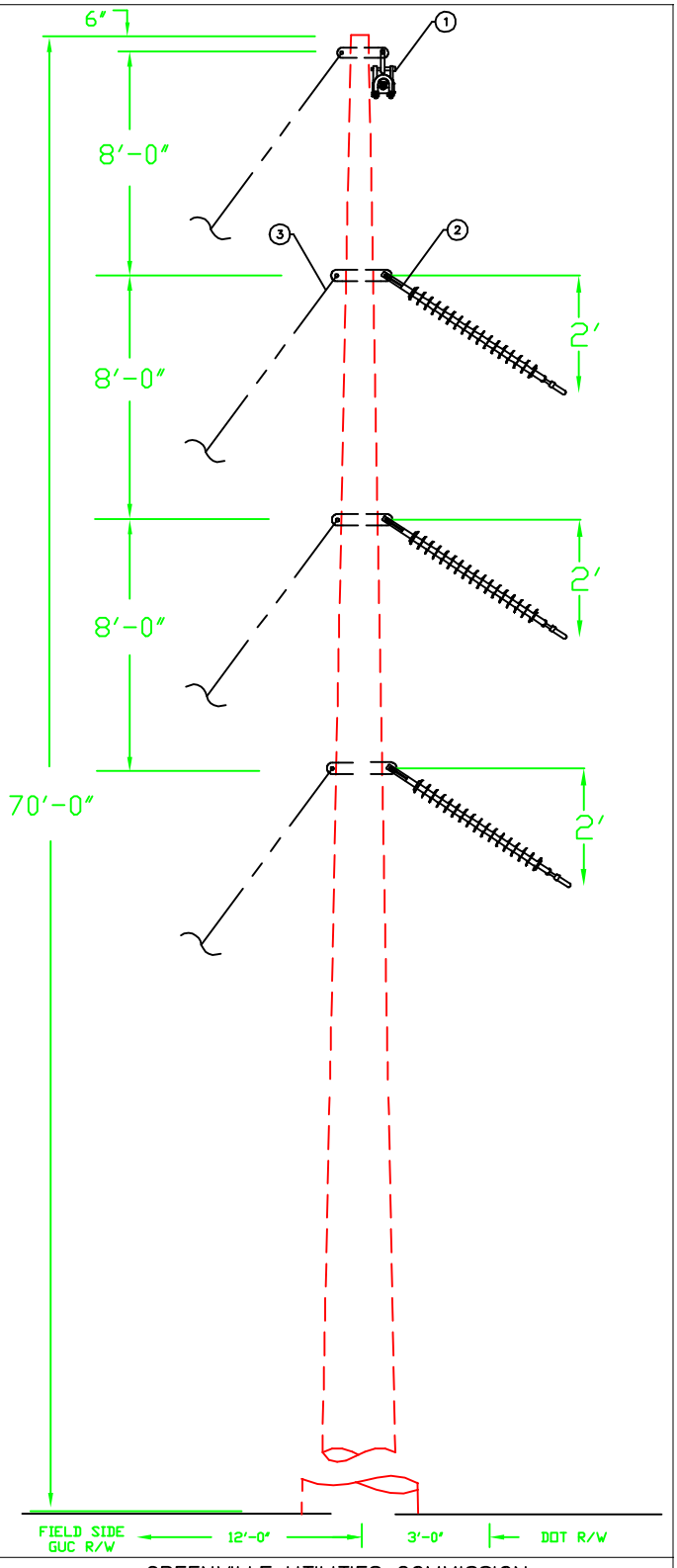

NOTE: DRAWING IS NOT TO SCALE. ALL DIMENSIONS ARE O.C. OF INSULATOR MOUNTS.

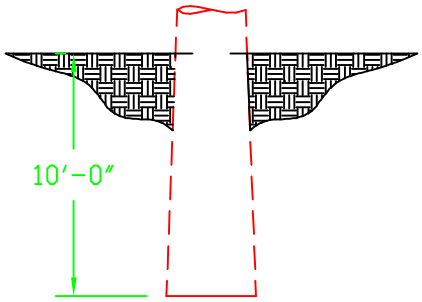

80' Structure Embedment

DWG. REF.	ea.	LIST OF MATERIALS DESCRIPTION	ITEM	DET.
1	1	OHGW ASSEMBLY, ANGLE	–	TM–4A
2	3	ANGLE ASSEMBLY, PRIMARY	–	TM–1CM
3	4	SINGLE DOWN GUY	–	TG–21A
	4	ANCHOR ASSEMBLY, TRANSMISSION	–	TA–2H

GREENVILLE UTILITIES COMMISSION
GREENVILLE, NORTH CAROLINA

Greenville Utilities

115 KV 3 PHASE, VERTICAL STRUCTURE LARGE ANGLE, SUSPENSION

DWN. JLS		DATE: 03/18/19	
CKD. KW		APPD. KW	
SCALE: N.T.S.			
DATE	REVISION	DATE	REVISION

DWG. NO.

TSV3

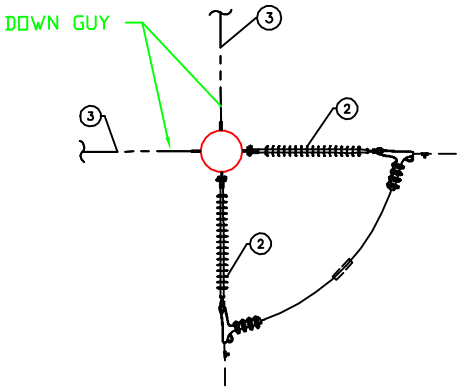

OVERHEAD VIEW

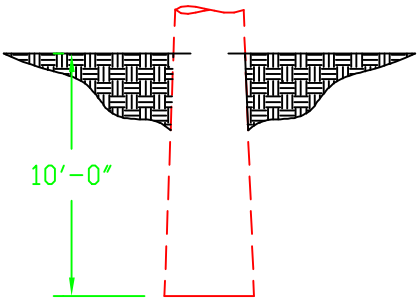

80' Structure Embedment

NOTE: DRAWING IS NOT TO SCALE. ALL DIMENSIONS ARE O.C. OF INSULATOR MOUNTS.

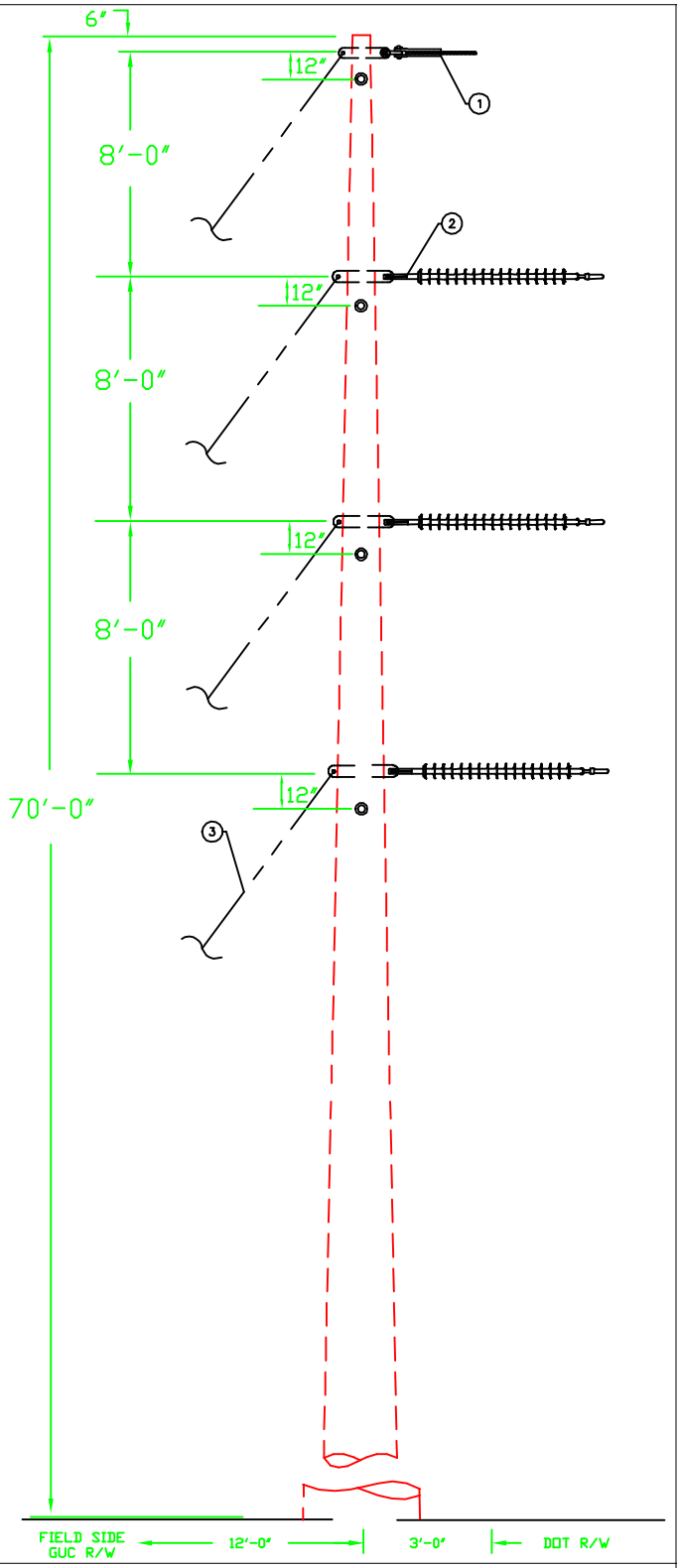

DWG. REF.	ea.	LIST OF MATERIALS DESCRIPTION	ITEM	DET.
1	2	OHGW ASSEMBLY, DEADEND	–	TM–4
2	6	DEADEND ASSEMBLY, PRIMARY	–	TM–1EM
3	8	SINGLE DOWN GUY	–	TG–21A
	8	ANCHOR ASSEMBLY, TRANSMISSION	–	TA–2H

GREENVILLE UTILITIES COMMISSION
GREENVILLE, NORTH CAROLINA

Greenville Utilities

115 KV 3 PHASE, VERTICAL STRUCTURE LARGE ANGLE, DOUBLE DEADEND SUSPENSION

DWN. JLS		DATE: 03/20/19	
CKD. KW		APPD. KW	
SCALE: N.T.S.			
DATE	REVISION	DATE	REVISION

DWG. NO.

TSV4

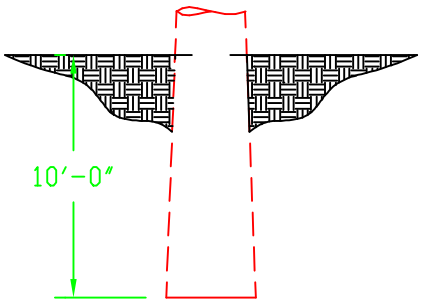

80' Structure Embedment

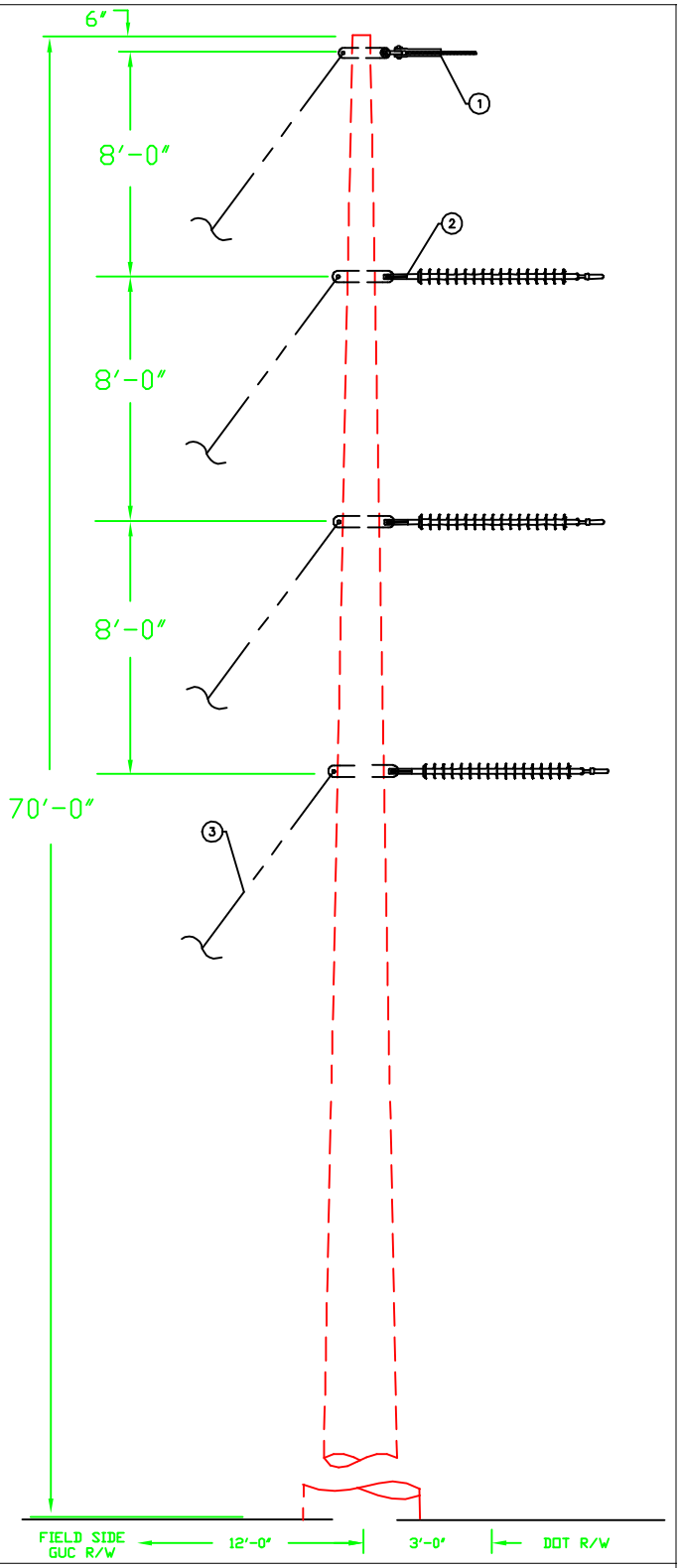

NOTES:

1) DRAWING IS NOT TO SCALE.
2) ALL DIMENSIONS ARE O.C. OF INSULATOR MOUNTS.
3) GUY PLATE TRANSMISSION ASSEMBLY (TG-27D) CAN BE USED IN PLACE OF VANGS

DWG. REF.		LIST OF MATERIALS		
	ea.	DESCRIPTION	ITEM	DET.
1	1	OHGW ASSEMBLY, DEADEND	–	TM-4
2	3	DEADEND ASSEMBLY, PRIMARY	–	TM-1EM
3	4	SINGLE DOWN GUY	–	TG-21A
	4	ANCHOR ASSEMBLY, TRANSMISSION	–	TA-2H

GREENVILLE UTILITIES COMMISSION
GREENVILLE, NORTH CAROLINA

Greenville Utilities

115 KV 3 PHASE, VERTICAL STRUCTURE, DEADEND SUSPENSION

DWN. JLS		DATE: 03/21/19	
CKD. KW		APPD. KW	
SCALE: N.T.S.			
DATE	REVISION	DATE	REVISION

DWG. NO.

TSV5

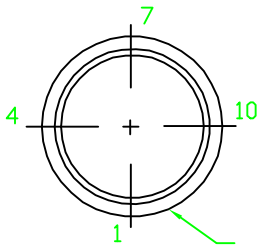

THRU HOLE BORING DETAIL		
DIAMETER	FROM SMALL END	FLAT#
1.00"	10'–0"	1
1.00"	11'–0"	1
1.00"	18'–0"	1
1.00"	19'–0"	1
1.00"	26'–0"	1
1.00"	27'–0"	1

OVERHEAD VIEW

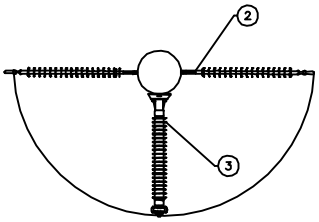

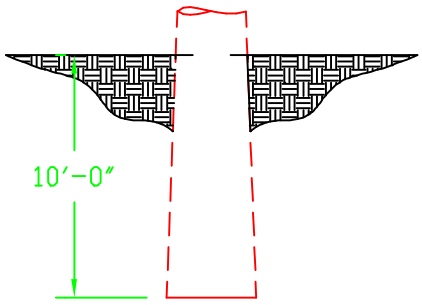

80' Structure Embedment

NOTE: DRAWING IS NOT TO SCALE. ALL DIMENSIONS ARE O.C. OF INSULATOR MOUNTS.

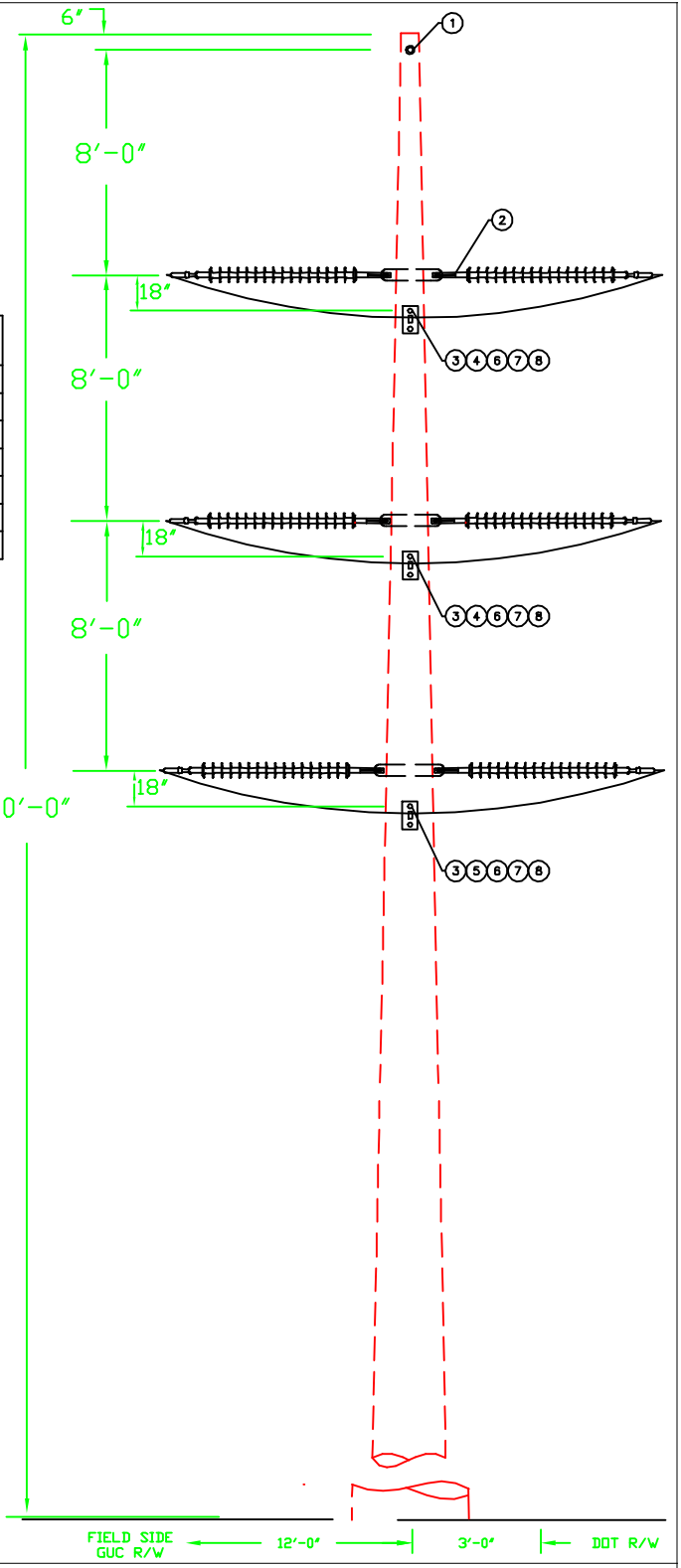

DWG. REF.	ea.	LIST OF MATERIALS DESCRIPTION	ITEM	DET.
1	1	OHGW ASSEMBLY, TANGENT	–	TM–4A
2	6	DEADEND ASSEMBLY, PRIMARY	–	TM–1EM
3	3	115 KV POST INSULATOR TANGENT	–	TG–21A
4	4	BOLT, MACHINE, 3/4" x 16"	–	
5	2	BOLT, MACHINE, 3/4" x 18"	–	
6	6	SPRING LOCK WASHER, 3/4"	–	
7	6	NUT, 3/4"	–	
8	6	WASHER SQUARE, 4"x4"x1/4", w/15/16"	–	

GREENVILLE UTILITIES COMMISSION
GREENVILLE, NORTH CAROLINA

Greenville Utilities

115 KV 3 PHASE, VERTICAL STRUCTURE
TANGENT SMALL ANGLE DOUBLE DEADEND, SUSPENSION

DWN. JLS		DATE: 03/18/19	
CKD. KW		APPD. KW	
SCALE: N.T.S.			
DATE	REVISION	DATE	REVISION
06/25/21	A		

DWG. NO.

TSV6

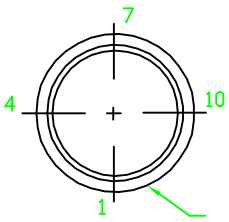

THRU HOLE BORING DETAIL		
DIAMETER	FROM SMALL END	FLAT#
1.00"	8'–0"	4
1.00"	9'–0"	4
1.00"	16'–0"	4
1.00"	17'–0"	4
1.00"	24'–0"	4
1.00"	25'–0"	4
3/4"	33'–0"	4
3/4"	33'–5"	4
3/4"	36'–6"	4
3/4"	36'–11"	4
3/4"	40'–0"	4
3/4"	40'–5"	4

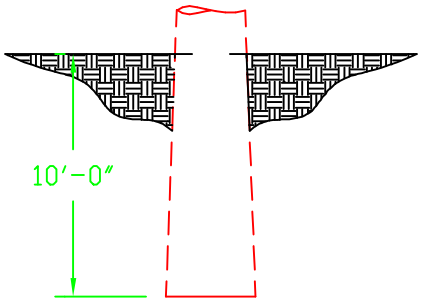

80' STRUCTURE EMBEDMENT

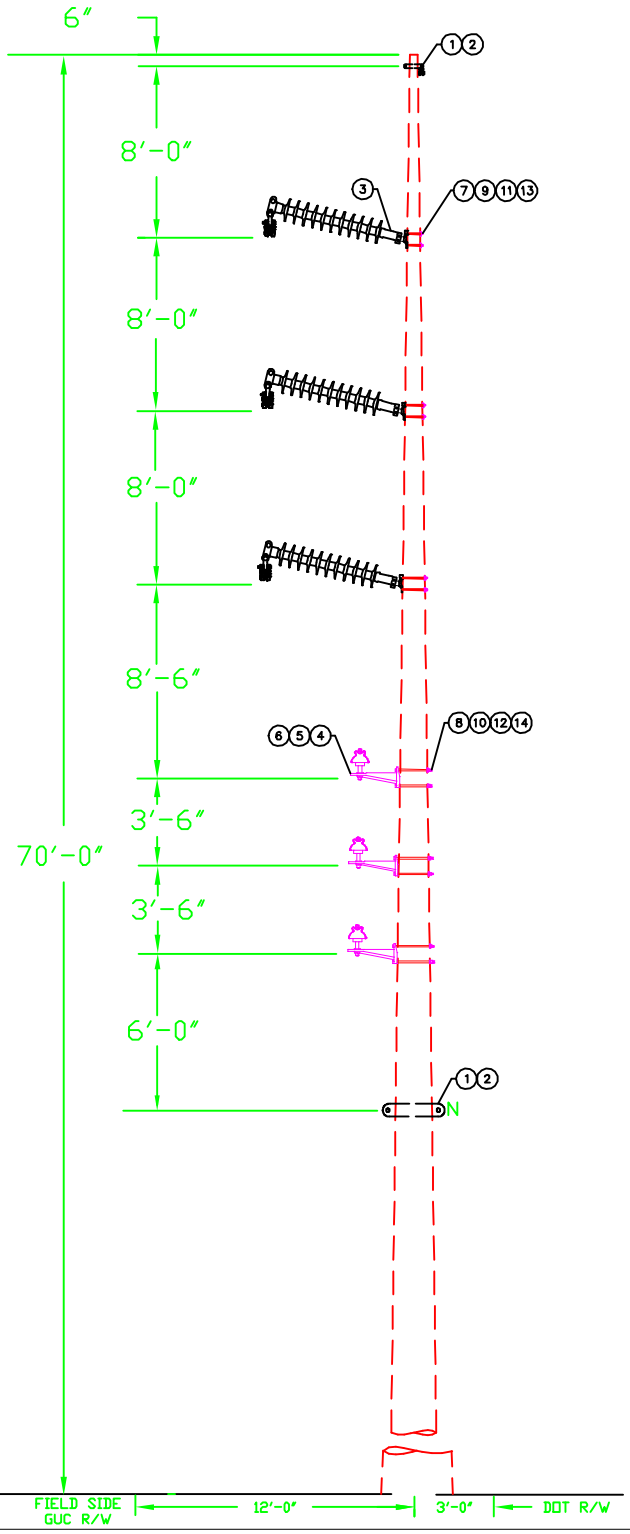

NOTES:

1) DRAWING IS NOT TO SCALE.

2) ALL DIMENSIONS ARE O.C. OF INSULATOR MOUNTS.

DWG. REF.	LIST OF MATERIALS			
	ea.	DESCRIPTION	ITEM	DET.
1	2	OHGW/NEUTRAL ASSEMBLY, TANGENT	–	TM–4A
2	2	OHGW/NEUTRAL GROUNDING ASSEMBLY	–	TM–9X(S)
3	3	115 KV POST INSULATOR, TANGENT	–	TM–3DM
4	3	25 KV POST INSULATOR	–	
5	3	BRACKETS, MIF	–	
6	3	25 KV PIN	–	
7	6	BOLT, MACHINE, 3/4" x REQ	–	
8	6	BOLT, MACHINE, 5/8" x REQ	–	
9	6	SPRING LOCK WASHER, 3/4"	–	
10	6	SPRING LOCK WASHER, 5/8"	–	
11	6	NUT, 3/4"	–	
12	6	NUT, 5/8"	–	
13	12	WASHER, SQUARE, 4" x 4" x 1/4" w/ 13/16"	–	
14	6	WASHER, 2 1/4" SQUARE	–	
	1	DRIVEN GROUND ROD ASSEMBLY	–	TM–9

GREENVILLE UTILITIES COMMISSION
GREENVILLE, NORTH CAROLINA

Greenville Utilities

115 KV 3 PHASE, VERTICAL STRUCTURE,
TANGENT POST WITH VERTICAL MIF
DISTRIBUTION UB

DWN. JLS		DATE: 06/28/21	
CKD. KW		APPD. KW	
SCALE: N.T.S.			
DATE	REVISION	DATE	REVISION

DWG. NO.

TPVD1.V1

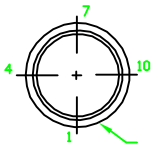

THRU HOLE BORING DETAIL		
DIAMETER	FROM SMALL END	FLAT#
1.00"	8'-0"	4
1.00"	9'-0"	4
1.00"	14'-0"	4
1.00"	15'-0"	4
1.00"	20'-0"	4
1.00"	21'-0"	4
0.75"	29'-0"	4
0.75"	29'-5"	4
0.75"	32'-6"	4
0.75"	32'-11"	4
0.75"	36'-0"	4
0.75"	36'-5"	4

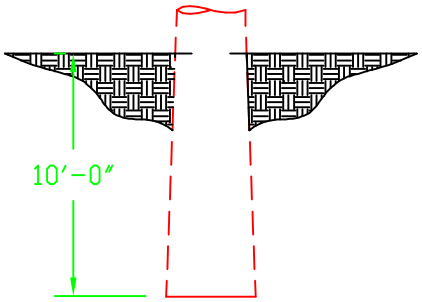

80' STRUCTURE EMBEDMENT

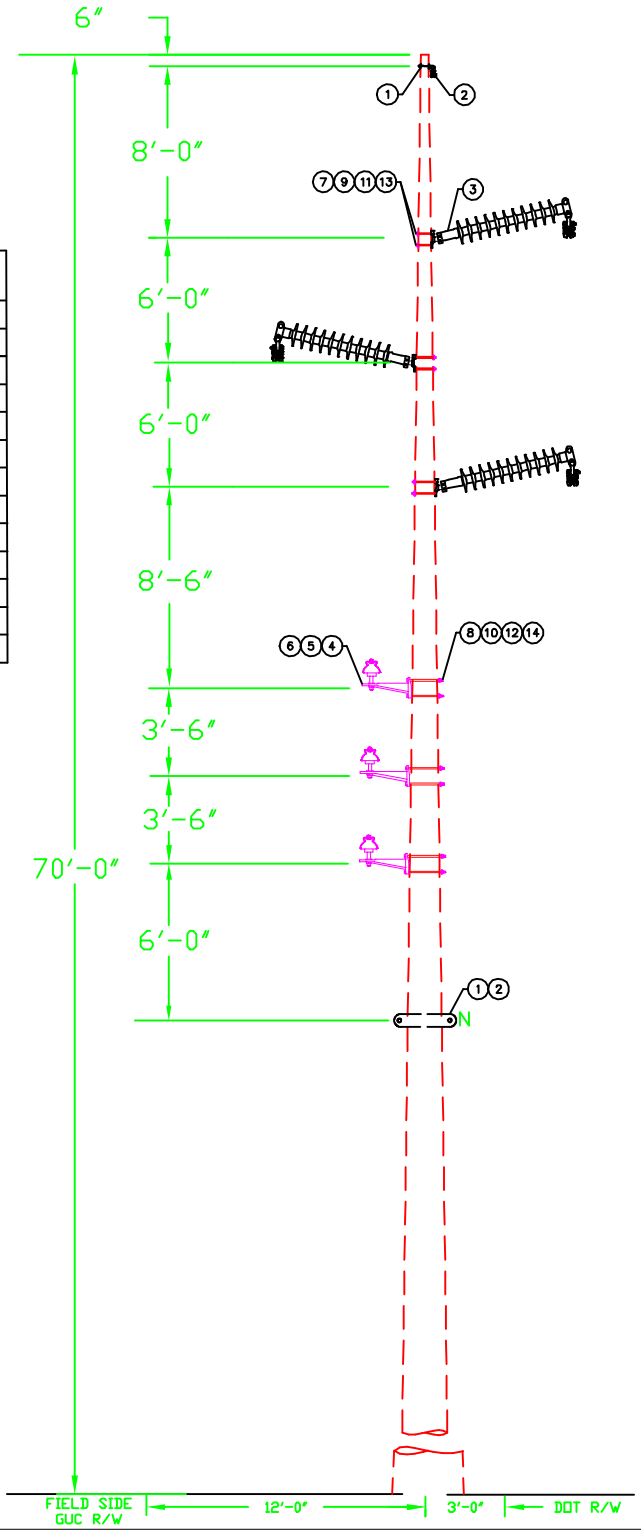

NOTE:

1) DRAWING IS NOT TO SCALE.
2) ALL DIMENSIONS ARE O.C. OF INSULATOR MOUNTS.

DWG. REF.	LIST OF MATERIALS			
	ea.	DESCRIPTION	ITEM	DET.
1	2	OHGW/NEUTRAL ASSEMBLY, TANGENT	–	TM-4A
2	2	OHGW/NEUTRAL GROUNDING ASSEMBLY	–	TM-9X(S)
3	3	115 KV POST INSULATOR, TANGENT	–	TM-3DM
4	3	25 KV POST INSULATOR	–	
5	3	BRACKETS, MIF	–	
6	3	25 KV PIN	–	
7	6	BOLT, MACHINE, 3/4" x REQ	–	
8	6	BOLT, MACHINE, 5/8" x REQ	–	
9	6	SPRING LOCK WASHER, 3/4"	–	
10	6	SPRING LOCK WASHER, 5/8"	–	
11	6	NUT, 3/4"	–	
12	6	NUT, 5/8"	–	
13	12	WASHER, SQUARE, 4" x 4" x 1/4" w/ 13/16"	–	
14	6	WASHER, 2 1/4" SQUARE	–	
	1	DRIVEN GROUND ROD ASSEMBLY	–	TM-9

GREENVILLE UTILITIES COMMISSION
GREENVILLE, NORTH CAROLINA

Greenville Utilities

115 KV 3 PHASE, Z-FRAME STRUCTURE, TANGENT, POST INSULATORS, WITH VERTICAL TANGENT DISTRIBUTION

DWN. JLS		DATE: 06/28/21	
CKD. KW		APPD. KW	
SCALE: N.T.S.			
DATE	REVISION	DATE	REVISION

DWG. NO.

TPZD1.V1

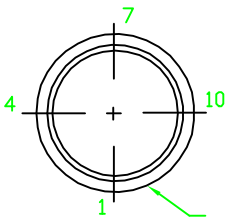

THRU HOLE BORING DETAIL		
DIAMETER	FROM SMALL END	FLAT#
1.00"	8'–0"	4
1.00"	9'–0"	4
1.00"	16'–0"	4
1.00"	17'–0"	4
1.00"	24'–0"	4
1.00"	25'–0"	4
3/4"	33'–0"	4
3/4"	33'–5"	4
3/4"	36'–6"	4
3/4"	36'–11"	4
3/4"	40'–0"	4
3/4"	40'–5"	4

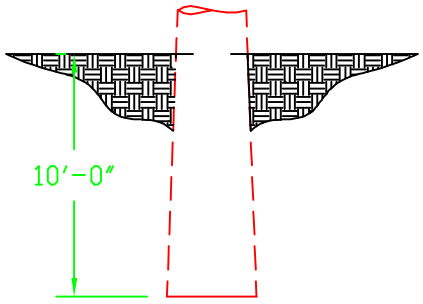

80' STRUCTURE EMBEDMENT

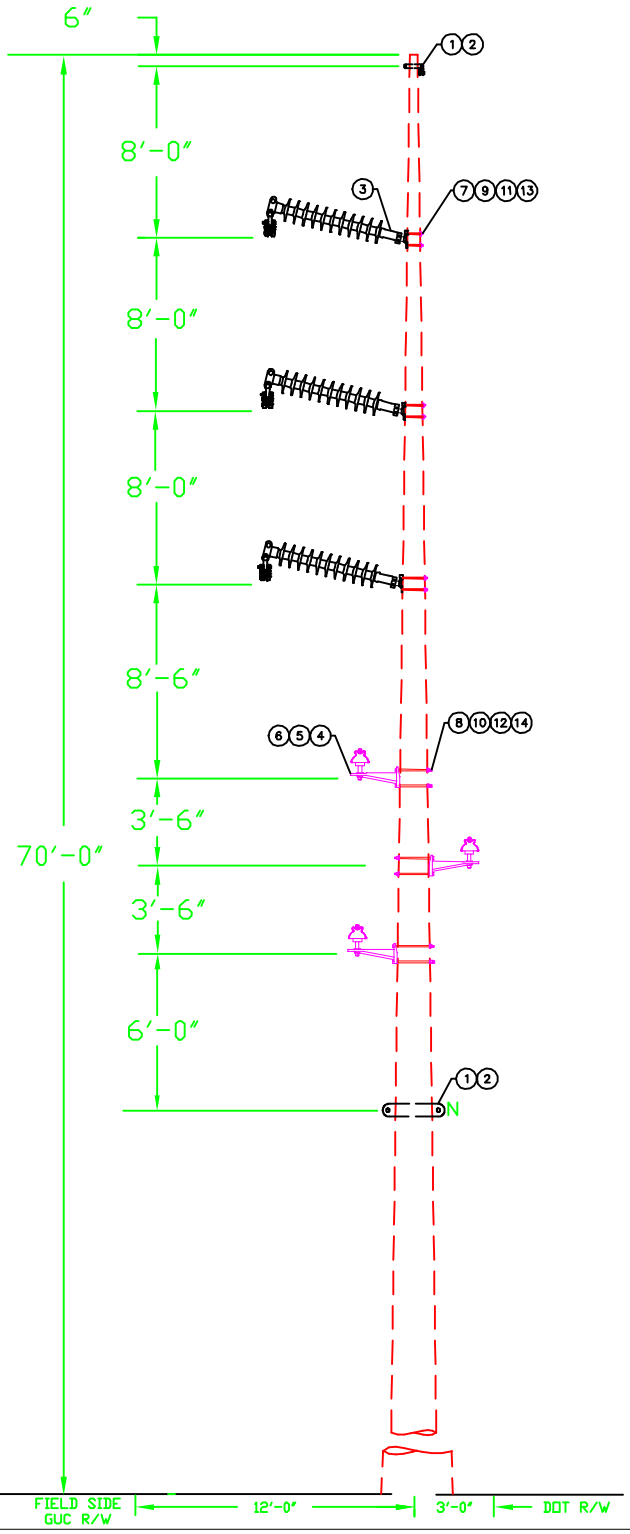

NOTES:

1) DRAWING IS NOT TO SCALE.

2) ALL DIMENSIONS ARE O.C. OF INSULATOR MOUNTS.

DWG. REF.	LIST OF MATERIALS			
	ea.	DESCRIPTION	ITEM	DET.
1	2	OHGW/NEUTRAL ASSEMBLY, TANGENT	–	TM–4A
2	2	OHGW/NEUTRAL GROUNDING ASSEMBLY	–	TM–9X(S)
3	3	115 KV POST INSULATOR, TANGENT	–	TM–3DM
4	3	25 KV POST INSULATOR	–	
5	3	BRACKETS, MIF	–	
6	3	25 KV PIN	–	
7	6	BOLT, MACHINE, 3/4" x REQ	–	
8	6	BOLT, MACHINE, 5/8" x REQ	–	
9	6	SPRING LOCK WASHER, 3/4"	–	
10	6	SPRING LOCK WASHER, 5/8"	–	
11	6	NUT, 3/4"	–	
12	6	NUT, 5/8"	–	
13	12	WASHER, SQUARE, 4" x 4" x 1/4" w/ 13/16"	–	
14	6	WASHER, 2 1/4" SQUARE	–	
	1	DRIVEN GROUND ROD ASSEMBLY	–	TM–9

GREENVILLE UTILITIES COMMISSION
GREENVILLE, NORTH CAROLINA

Greenville Utilities

115 KV 3 PHASE, VERTICAL STRUCTURE,
TANGENT POST WITH VERTICAL MIF
DISTRIBUTION UB

DWN. JLS		DATE: 06/28/21	
CKD. KW		APPD. KW	
SCALE: N.T.S.			
DATE	REVISION	DATE	REVISION

DWG. NO.

TPVD1.Z1

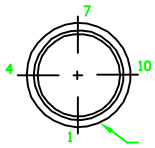

THRU HOLE BORING DETAIL		
DIAMETER	FROM SMALL END	FLAT#
1.00"	8'-0"	4
1.00"	9'-0"	4
1.00"	14'-0"	4
1.00"	15'-0"	4
1.00"	20'-0"	4
1.00"	21'-0"	4
0.75"	29'-0"	4
0.75"	29'-5"	4
0.75"	32'-6"	4
0.75"	32'-11"	4
0.75"	36'-0"	4
0.75"	36'-5"	4

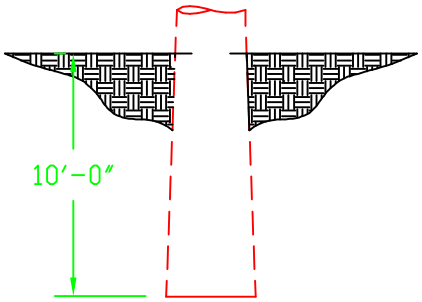

80' STRUCTURE EMBEDMENT

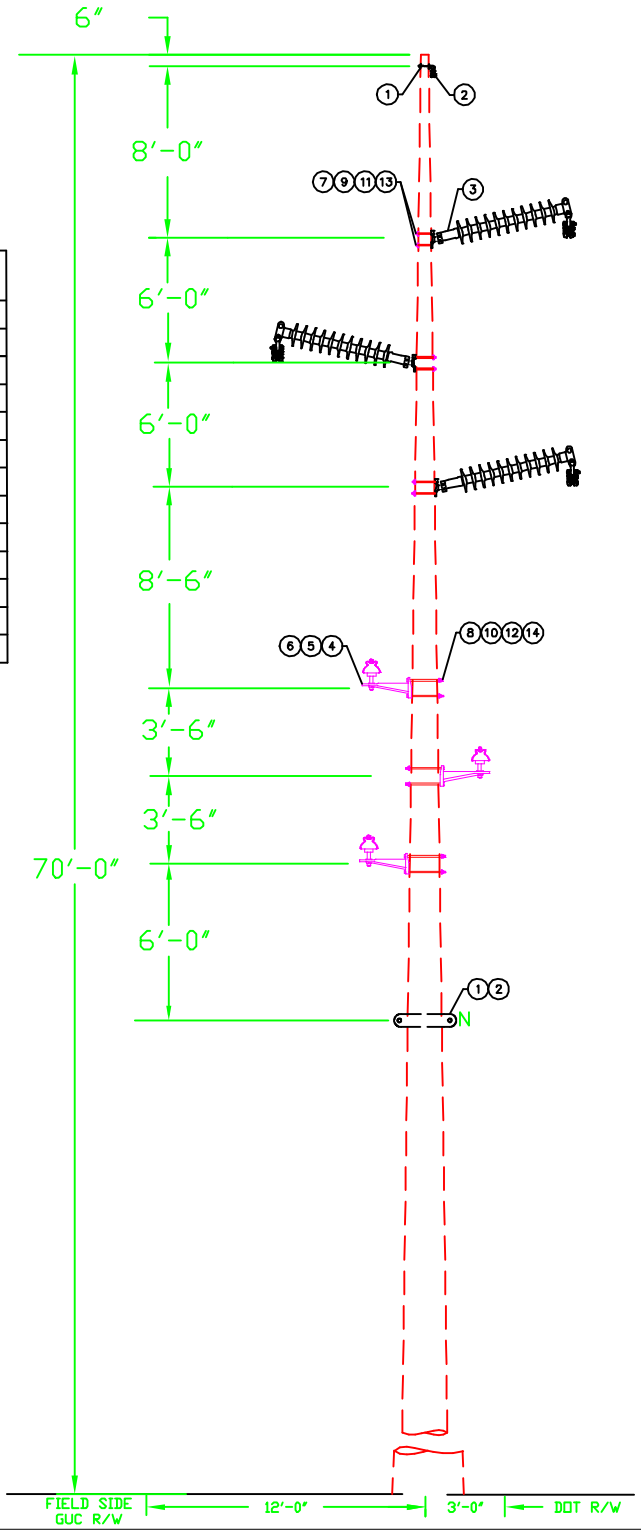

NOTE:

1) DRAWING IS NOT TO SCALE.
2) ALL DIMENSIONS ARE O.C. OF INSULATOR MOUNTS.

DWG. REF.	LIST OF MATERIALS			
	ea.	DESCRIPTION	ITEM	DET.
1	2	OHGW/NEUTRAL ASSEMBLY, TANGENT	–	TM-4A
2	2	OHGW/NEUTRAL GROUNDING ASSEMBLY	–	TM-9X(S)
3	3	115 KV POST INSULATOR, TANGENT	–	TM-3DM
4	3	25 KV POST INSULATOR	–	
5	3	BRACKETS, MIF	–	
6	3	25 KV PIN	–	
7	6	BOLT, MACHINE, 3/4" x REQ	–	
8	6	BOLT, MACHINE, 5/8" x REQ	–	
9	6	SPRING LOCK WASHER, 3/4"	–	
10	6	SPRING LOCK WASHER, 5/8"	–	
11	6	NUT, 3/4"	–	
12	6	NUT, 5/8"	–	
13	12	WASHER, SQUARE, 4" x 4" x 1/4" w/ 13/16"	–	
14	6	WASHER, 2 1/4" SQUARE	–	
	1	DRIVEN GROUND ROD ASSEMBLY	–	TM-9

GREENVILLE UTILITIES COMMISSION
GREENVILLE, NORTH CAROLINA

Greenville Utilities

115 KV 3 PHASE, Z-FRAME STRUCTURE, TANGENT, POST INSULATORS, WITH Z-FRAME TANGENT DISTRIBUTION

DWN. JLS		DATE: 06/28/21	
CKD. KW		APPD. KW	
SCALE: N.T.S.			
DATE	REVISION	DATE	REVISION

DWG. NO.

TPZD1.Z1

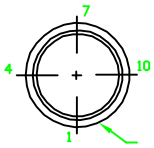

THRU HOLE BORING DETAIL		
DIAMETER	FROM SMALL END	FLAT#
1.00	0'–6.00"	4
1.00"	8'–0"	4
1.00"	9'–0"	4
1.00"	14'–0"	4
1.00"	15'–0"	4
1.00"	20'–0"	4
1.00"	21'–0"	4
0.75"	29'–0"	4
0.75"	29'–5"	4
0.75"	33'–0"	4
0.75"	33'–5"	4

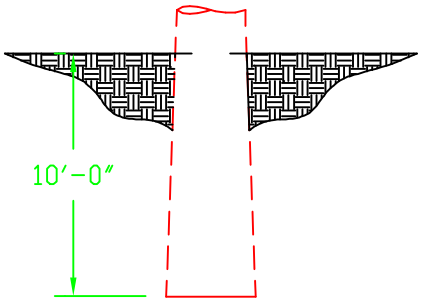

80' STRUCTURE EMBEDMENT

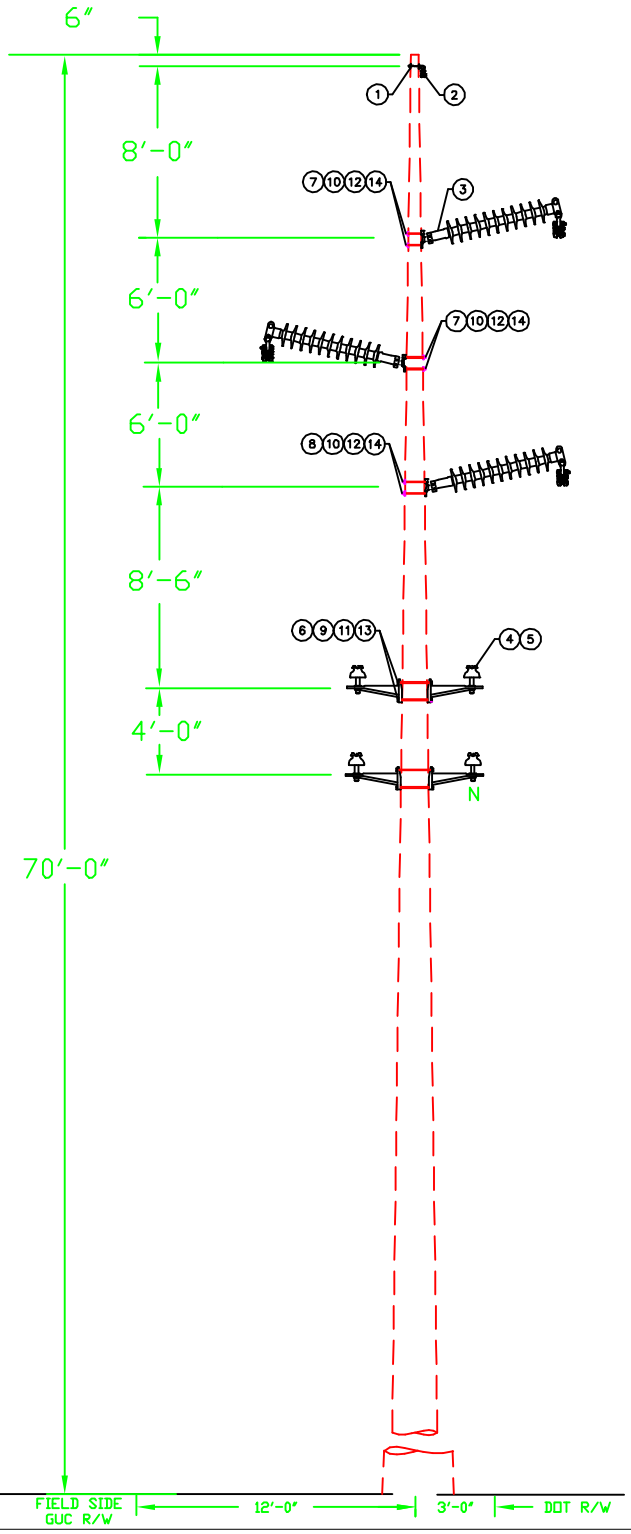

NOTE:

1) DRAWING IS NOT TO SCALE.
2) ALL DIMENSIONS ARE O.C. OF INSULATOR MOUNTS.

DWG. REF.	LIST OF MATERIALS			
	ea.	DESCRIPTION	ITEM	DET.
1	1	SINGLE BOLT OHGW SUPPORT	–	TM–6A(S)
2	1	OHGW ASSEMBLY, TANGENT	–	TM–4A
3	3	115 KV POST INSULATOR, TANGENT	–	TM–3DM
4	4	15 KV PIN INSULATOR	–	
5	4	PINS SHANK	–	
6	4	BRACKET, MIF	–	
7	4	BOLT, MACHINE, 3/4" x 14"	–	
8	2	BOLT, MACHINE, 3/4" x 16"	–	
9	4	BOLT, MACHINE, 5/8" x 18"	–	
10	6	SPRING LOCK WASHER, 3/4"	–	
11	4	SPRING LOCK WASHER, 5/8"	–	
12	6	NUT, 3/4"	–	
13	4	NUT, 5/8"	–	
14	6	WASHER, SQUARE, 4" x 4" x 1/4" w/ 15/16"	–	

GREENVILLE UTILITIES COMMISSION
GREENVILLE, NORTH CAROLINA

Greenville Utilities

115 KV 3 PHASE, Z–FRAME STRUCTURE, TANGENT, POST INSULATORS, WITH VERTICAL TANGENT DISTRIBUTION

DWN. JLS		DATE: 03/28/19	
CKD. KW		APPD. KW	
SCALE: N.T.S.			
DATE	REVISION	DATE	REVISION
06/28/21	A		

DWG. NO.

TPZD1.V1.2

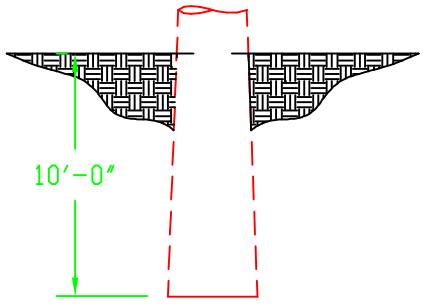

80' STRUCTURE EMBEDMENT

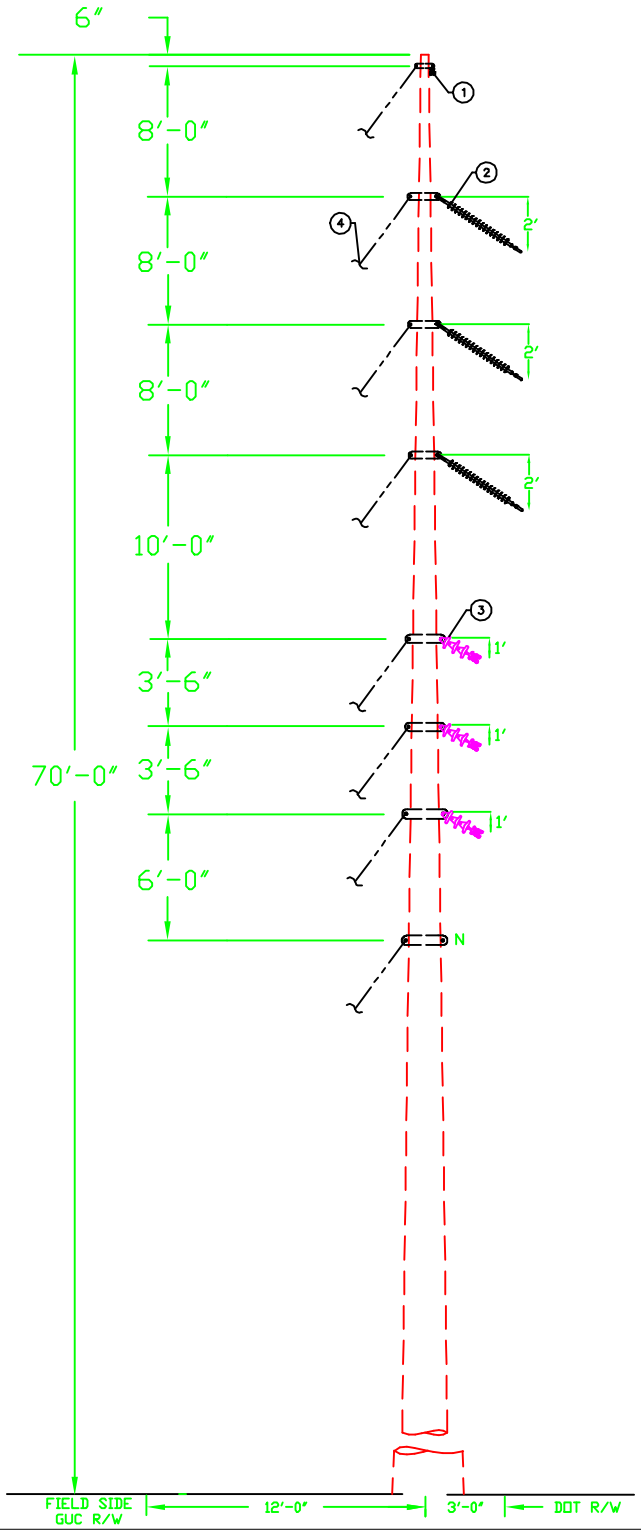

NOTES:

1) DRAWING IS NOT TO SCALE.
2) ALL DIMENSIONS ARE O.C. OF INSULATOR MOUNTS.
3) GUY PLATE TRANSMISSION ASSEMBLY (TG-27D) CAN BE USED IN PLACE OF VANGS.

DWG. REF.	LIST OF MATERIALS			
	ea.	DESCRIPTION	ITEM	DET.
1	1	OHGW ASSEMBLY, ANGLE	–	TM-4A
2	3	ANGLE ASSEMBLY, PRIMARY	–	TM-1CM
3	3	ANGLE ASSEMBLY, SECONDARY	–	
4	8	SINGLE DOWN GUY	–	TG-21A
	8	ANCHOR ASSEMBLY, TRANSMISSION	–	TA-2H

GREENVILLE UTILITIES COMMISSION
GREENVILLE, NORTH CAROLINA

Greenville Utilities

115 KV 3 PHASE, VERTICAL DOUBLE CIRCUIT STRUCTURE, LARGE ANGLE, SUSPENSION

DWN. JLS		DATE: 03/21/19	
CKD. KW		APPD. KW	
SCALE: N.T.S.			
DATE	REVISION	DATE	REVISION
06/28/21	A		

DWG. NO.
TSVD3.V3

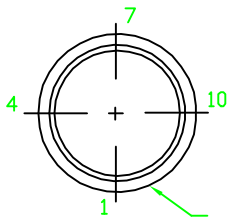

THRU HOLE BORING DETAIL		
DIAMETER	FROM SMALL END	FLAT#
1.00"	0'–6.00"	4
1.00"	8'–0"	4
1.00"	9'–0"	4
1.00"	16'–0"	4
1.00"	17'–0"	4
1.00"	24'–0"	4
1.00"	25'–0"	4
0.75"	33'–0"	1
0.75"	34'–0"	1
0.75"	40'–0"	4

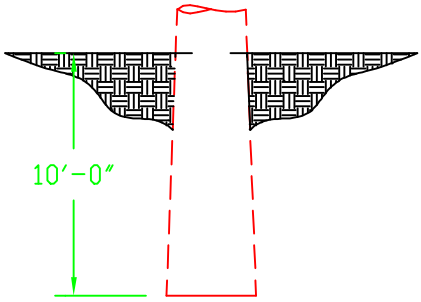

80' STRUCTURE EMBEDMENT

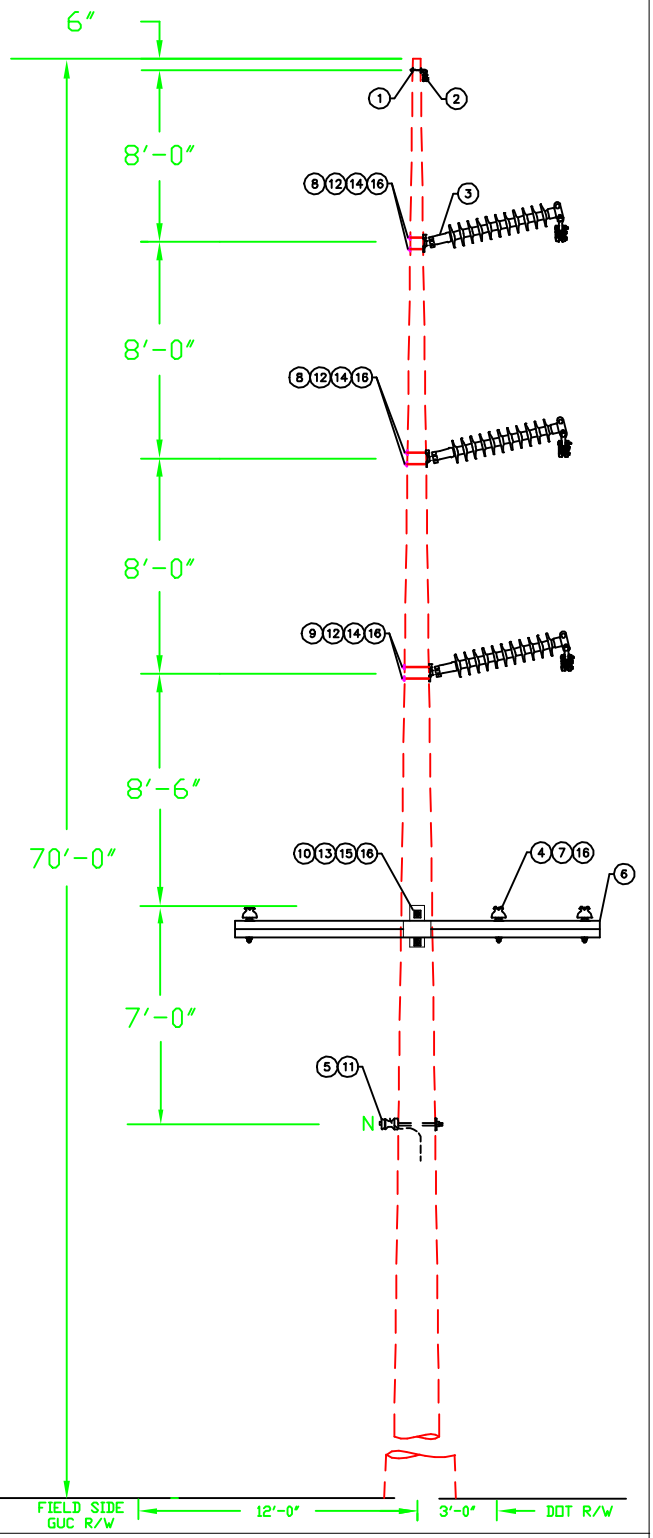

NOTES:

1) DRAWING IS NOT TO SCALE.
2) ALL DIMENSIONS ARE O.C. OF INSULATOR MOUNTS.
3) CROSSARM BRACES NOT SHOWN IN DRAWING.

DWG. REF.	LIST OF MATERIALS			
	ea.	DESCRIPTION	ITEM	DET.
1	1	SINGLE BOLT OHGW SUPPORT	–	TM–6A(S)
2	1	OHGW ASSEMBLY, TANGENT	–	TM–4A
3	3	115 KV POST INSULATOR, TANGENT	–	TM–3DM
4	3	15 KV PIN INSULATOR	–	
5	1	INSULATOR, SPOOL "J151"	–	
6	1	10' DISTRIBUTION CROSSARM	–	
7	3	PINS, LONG SHANK CROSS	–	
8	4	BOLT, MACHINE, 3/4" x 14"	–	
9	2	BOLT, MACHINE, 3/4" x 16"	–	
10	2	BOLT, MACHINE, 5/8" x 18"	–	
11	1	BOLT, SPOOL, 5/8" x 18"	–	
12	6	SPRING LOCK WASHER, 3/4"	–	
13	2	SPRING LOCK WASHER, 5/8"	–	
14	6	NUT, 3/4"	–	
15	2	NUT, 5/8"		
16	11	WASHER, SQUARE, 4" x 4" x 1/4" w/ 15/16"	–	

GREENVILLE UTILITIES COMMISSION
GREENVILLE, NORTH CAROLINA

Greenville Utilities

115 KV 3 PHASE, VERTICAL STRUCTURE, TANGENT POST WITH DISTRIBUTION ON CROSSARM

DWN. JLS		DATE: 03/25/19	
CKD. KW		APPD. KW	
SCALE: N.T.S.			
DATE	REVISION	DATE	REVISION
06/25/21	A		

DWG. NO.

TPVD1.C1

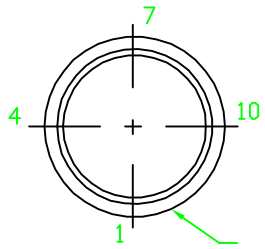

THRU HOLE BORING DETAIL		
DIAMETER	FROM SMALL END	FLAT#
1.00"	8'–0"	4
1.00"	9'–0"	4
1.00"	14'–0"	4
1.00"	15'–0"	4
1.00"	20'–0"	4
1.00"	21'–0"	4
0.75"	29'–0"	1
0.75"	30'–0"	1
0.75"	36'–0"	4

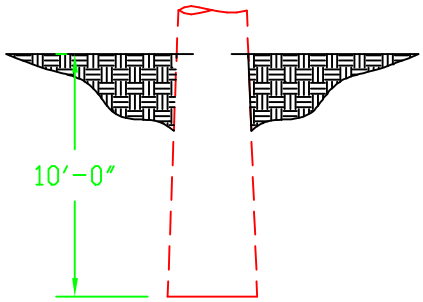

80' Structure Embedment

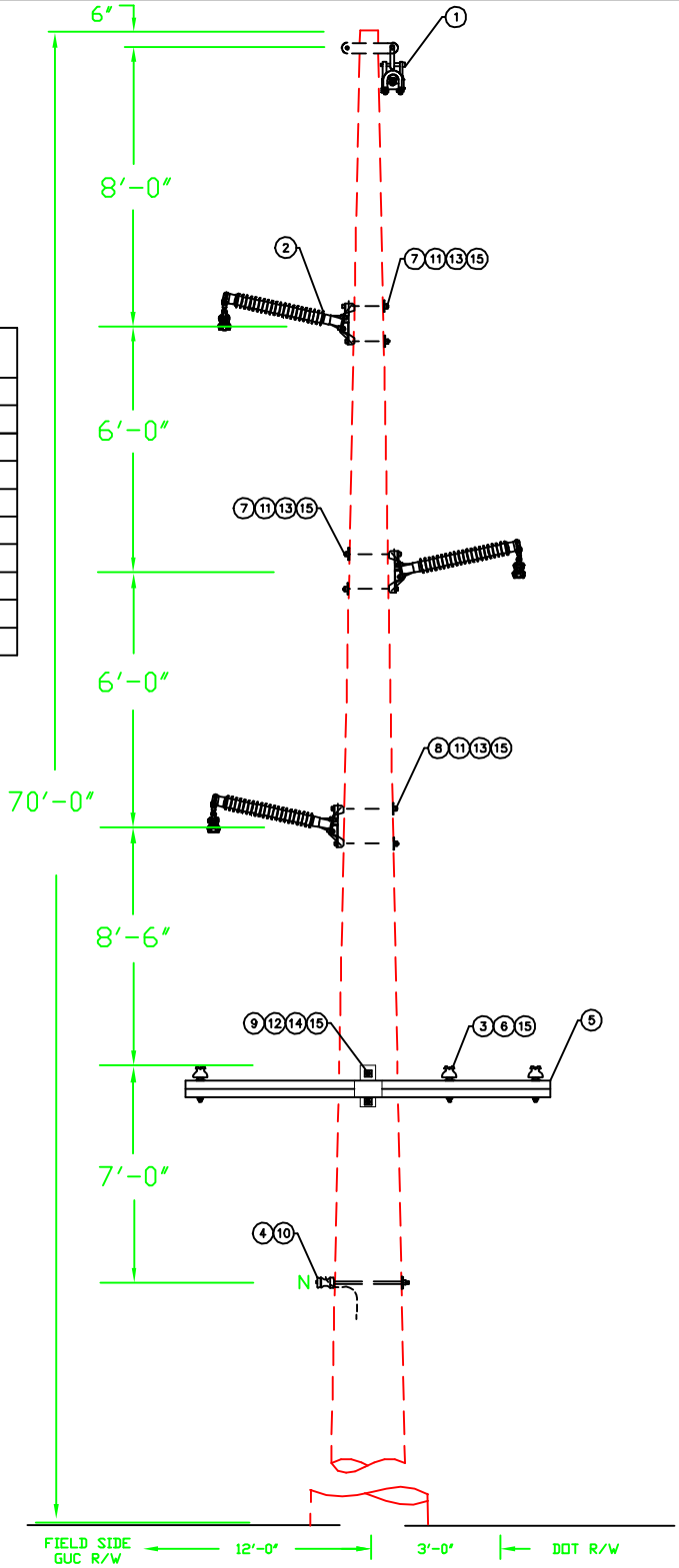

NOTES:

1) DRAWING IS NOT TO SCALE.
2) ALL DIMENSIONS ARE O.C. OF INSULATOR MOUNTS.
3) CROSSARM BRACES NOT SHOWN IN DRAWING.

DWG. REF.	LIST OF MATERIALS			
	ea.	DESCRIPTION	ITEM	DET.
1	1	OHGW ASSEMBLY, TANGENT	–	TM–4A
2	3	115 KV POST INSULATOR, TANGENT	–	TM–3DM
3	3	15 KV PIN INSULATOR	–	
4	1	INSULATOR, SPOOL "J151"	–	
5	1	10' DISTRIBUTION CROSSARM	–	
6	3	PINS, LONG SHANK CROSS	–	
7	4	BOLT, MACHINE, 3/4" x 14"	–	
8	2	BOLT, MACHINE, 3/4" x 16"	–	
9	2	BOLT, MACHINE, 5/8" x 18"	–	
10	1	BOLT, SPOOL, 5/8" x 18"	–	
11	6	SPRING LOCK WASHER, 3/4"	–	
12	2	SPRING LOCK WASHER, 5/8"	–	
13	6	NUT, 3/4"	–	
14	2	NUT, 5/8"	–	
15	11	WASHER, SQUARE, 4" x 4" x 1/4" w/ 15/16"	–	

GREENVILLE UTILITIES COMMISSION
GREENVILLE, NORTH CAROLINA

Greenville Utilities

115 KV 3 PHASE, Z–FRAME STRUCTURE, TANGENT POST WITH DISTRIBUTION ON CROSSARM

DWN. JLS		DATE: 03/25/19	
CKD. KW		APPD. KW	
SCALE: N.T.S.			
DATE	REVISION	DATE	REVISION
06/28/21	A		

DWG. NO.

TPZD1.C1

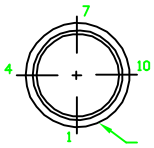

THRU HOLE BORING DETAIL		
DIAMETER	FROM SMALL END	FLAT#
1.00"	0'–6.00"	4
1.00"	8'–0"	4
1.00"	9'–0"	4
1.00"	16'–0"	4
1.00"	17'–0"	4
1.00"	24'–0"	4
1.00"	25'–0"	4
0.75"	33'–0"	1
0.75"	34'–0"	1
0.75"	41'–0"	1
0.75"	42'–0"	1
0.75"	48'–0"	4

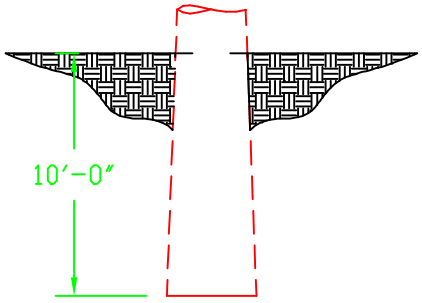

80' STRUCTURE EMBEDMENT

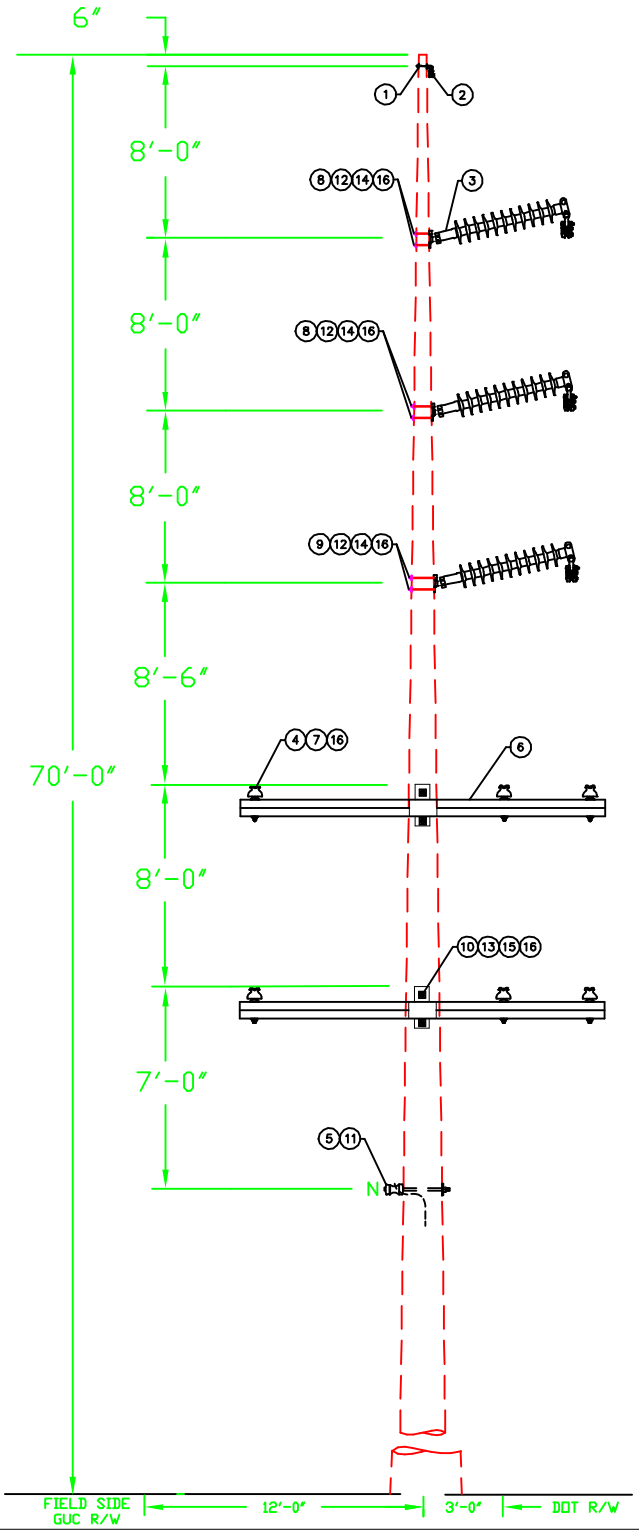

NOTE:

1) DRAWING IS NOT TO SCALE.
2) ALL DIMENSIONS ARE O.C. OF INSULATOR MOUNTS.
3) CROSSARM BRACES NOT SHOWN IN DRAWING.

DWG. REF.	LIST OF MATERIALS ea.	DESCRIPTION	ITEM	DET.
1	1	SINGLE BOLT OHGW SUPPORT	–	TM–6A(S)
2	1	OHGW ASSEMBLY, TANGENT	–	TM–4A
3	3	115 KV POST INSULATOR, TANGENT	–	TM–3DM
4	6	15 KV PIN INSULATOR	–	
5	1	INSULATOR, SPOOL "J151"	–	
6	2	10' DISTRIBUTION CROSSARM	–	
7	6	PINS LONG SHANK CROSS	–	
8	4	BOLT, MACHINE, 3/4" x 14"	–	
9	2	BOLT, MACHINE, 3/4" x 16"	–	
10	4	BOLT, MACHINE, 5/8" x 18"	–	
11	1	BOLT, SPOOL, 5/8" x 18"	–	
12	6	SPRING LOCK WASHER, 3/4"	–	
13	4	SPRING LOCK WASHER, 5/8"	–	
14	6	NUT, 3/4"	–	
15	4	NUT, 5/8"	–	
16	16	WASHER, SQUARE, 4" x 4" x 1/4" w/ 15/16"	–	

GREENVILLE UTILITIES COMMISSION
GREENVILLE, NORTH CAROLINA

Greenville Utilities

115 KV 3 PHASE, VERTICAL STRUCTURE, TANGENT, POST INSULATORS, WITH DOUBLE CROSSARM DISTRIBUTION

DWN. JLS		DATE: 03/25/19	
CKD. KW		APPD. KW	
SCALE: N.T.S.			
DATE	REVISION	DATE	REVISION
06/25/21	A		

DWG. NO.

TPVD1.DC1

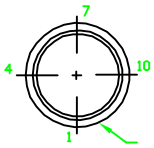

THRU HOLE BORING DETAIL		
DIAMETER	FROM SMALL END	FLAT#
1.00"	0'–6.00"	4
1.00"	8'–0"	4
1.00"	9'–0"	4
1.00"	14'–0"	4
1.00"	15'–0"	4
1.00"	20'–0"	4
1.00"	21'–0"	4
0.75"	29'–0"	1
0.75"	30'–0"	1
0.75"	37'–0"	1
0.75"	38'–0"	1
0.75"	44'–0"	4

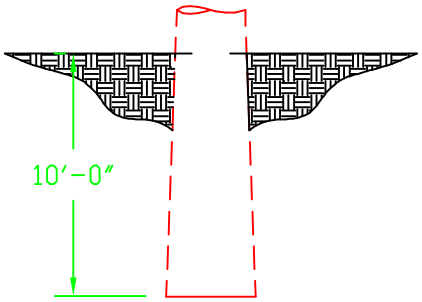

80' STRUCTURE EMBEDMENT

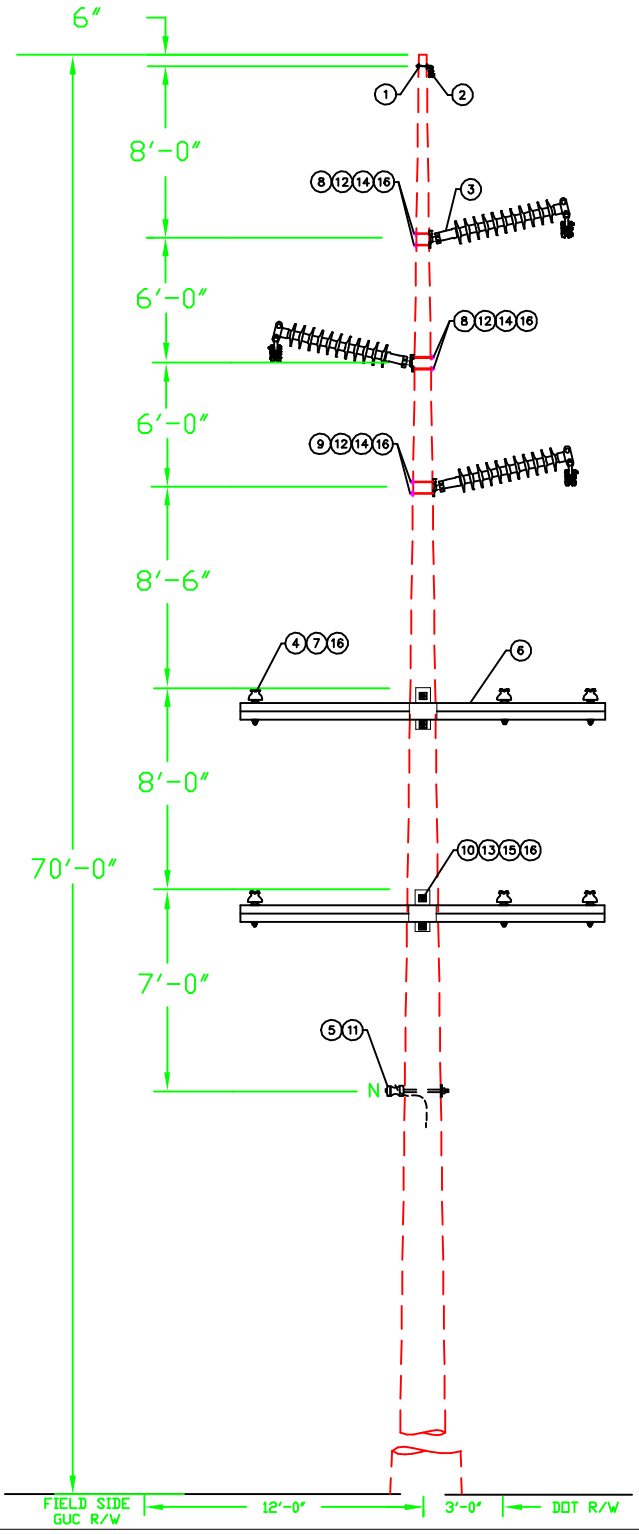

NOTE:

1) DRAWING IS NOT TO SCALE.
2) ALL DIMENSIONS ARE O.C. OF INSULATOR MOUNTS.
3) CROSSARM BRACES NOT SHOWN IN DRAWING.

DWG. REF.	LIST OF MATERIALS			
	ea.	DESCRIPTION	ITEM	DET.
1	1	SINGLE BOLT OHGW SUPPORT	–	TM–6A(S)
2	1	OHGW ASSEMBLY, TANGENT	–	TM–4A
3	3	115 KV POST INSULATOR, TANGENT	–	TM–3DM
4	6	15 KV PIN INSULATOR	–	
5	1	INSULATOR, SPOOL "J151"	–	
6	2	10' DISTRIBUTION CROSSARM	–	
7	6	PINS LONG SHANK CROSS	–	
8	4	BOLT, MACHINE, 3/4" x 14"	–	
9	2	BOLT, MACHINE, 3/4" x 16"	–	
10	4	BOLT, MACHINE, 5/8" x 18"	–	
11	1	BOLT, SPOOL, 5/8" x 18"	–	
12	6	SPRING LOCK WASHER, 3/4"	–	
13	4	SPRING LOCK WASHER, 5/8"	–	
14	6	NUT, 3/4"	–	
15	4	NUT, 5/8"	–	
16	16	WASHER, SQUARE, 4" x 4" x 1/4" w/ 15/16"	–	

GREENVILLE UTILITIES COMMISSION
GREENVILLE, NORTH CAROLINA

Greenville Utilities

115 KV 3 PHASE, Z–FRAME STRUCTURE, TANGENT, POST INSULATORS, WITH DOUBLE CROSSARM DISTRIBUTION

DWN. JLS		DATE: 03/25/19	
CKD. KW		APPD. KW	
SCALE: N.T.S.			
DATE	REVISION	DATE	REVISION
06/28/21	A		

DWG. NO.

TPZD1.DC1

Appendix I: Standard Transmission Assembly Drawings

[Balance of Page Left Blank Intentionally]

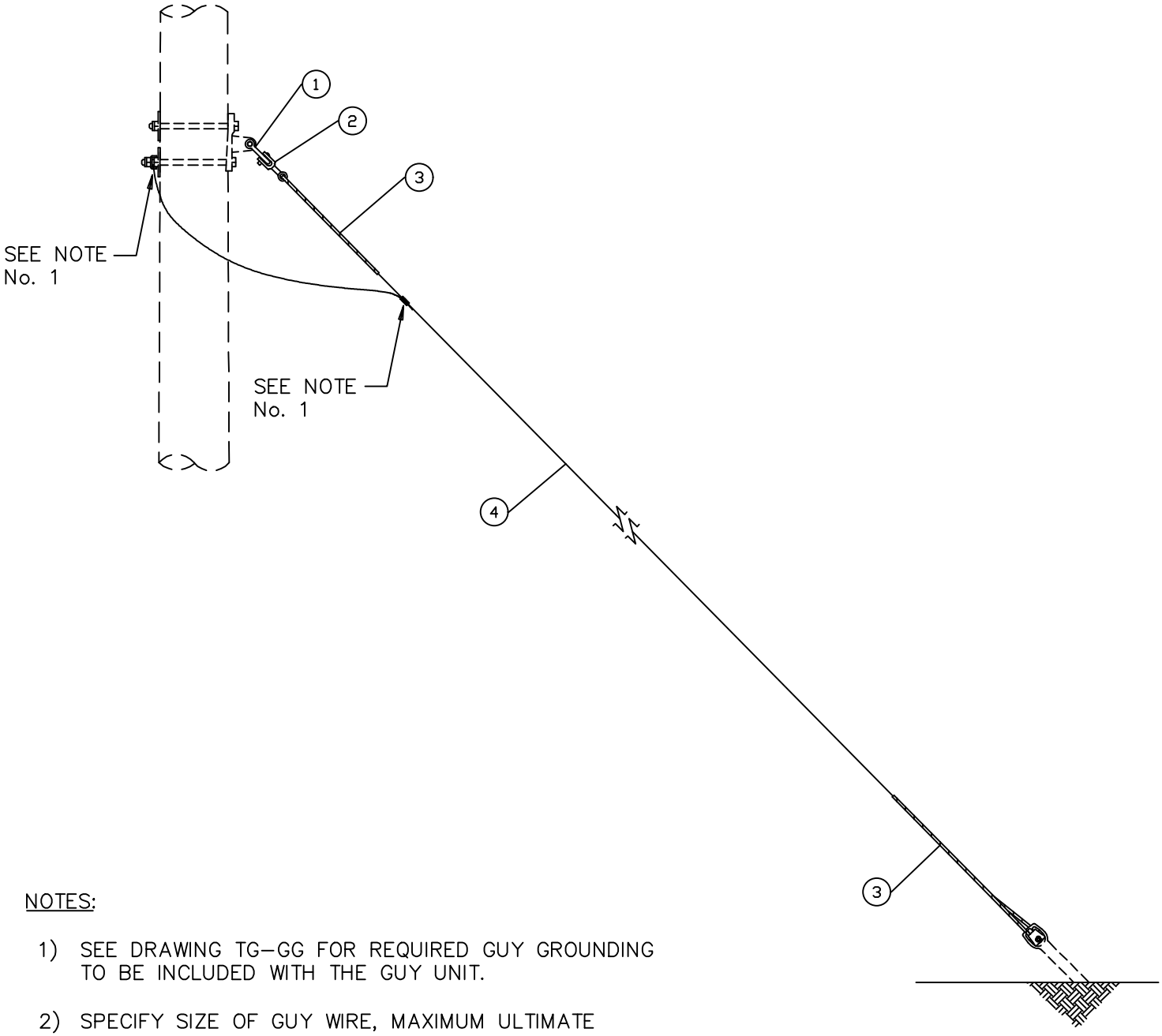

NOTES:

1) SEE DRAWING TG–GG FOR REQUIRED GUY GROUNDING TO BE INCLUDED WITH THE GUY UNIT.

2) SPECIFY SIZE OF GUY WIRE, MAXIMUM ULTIMATE RATED STRENGTH TO BE 33,000 LBS. REFER TO SPECIFIC WIRE SPECIFICATIONS FOR RATED STRENGTH.

3) "M" INDICATES INCLUSION ON ANCHOR ASSEMBLY.

DWG. REF.	TG–21		LIST OF MATERIALS
	A	A(M)	DESCRIPTION
1	–	1	ANCHOR SHACKLE, 30,000 LBS (MINIMUM)
2	1	1	CLEVIS – THIMBLE TYPE (40,000 LBS)
3	2	2	GUY – GRIP, PREFORMED, FOR GUY WIRE
4	*	*	GUY – WIRE
			* GUY WIRE AS REQUIRED

GREENVILLE UTILITIES COMMISSION
GREENVILLE, NORTH CAROLINA

Greenville Utilities

SINGLE DOWN GUY – WITH PREFORMED GRIPS.

DWN. JLS		DATE: 03/15/19	
CKD. KW		APPD. KW	
SCALE: N.T.S.			
DATE		DATE	REVISION

DWG. NO.
TG–21

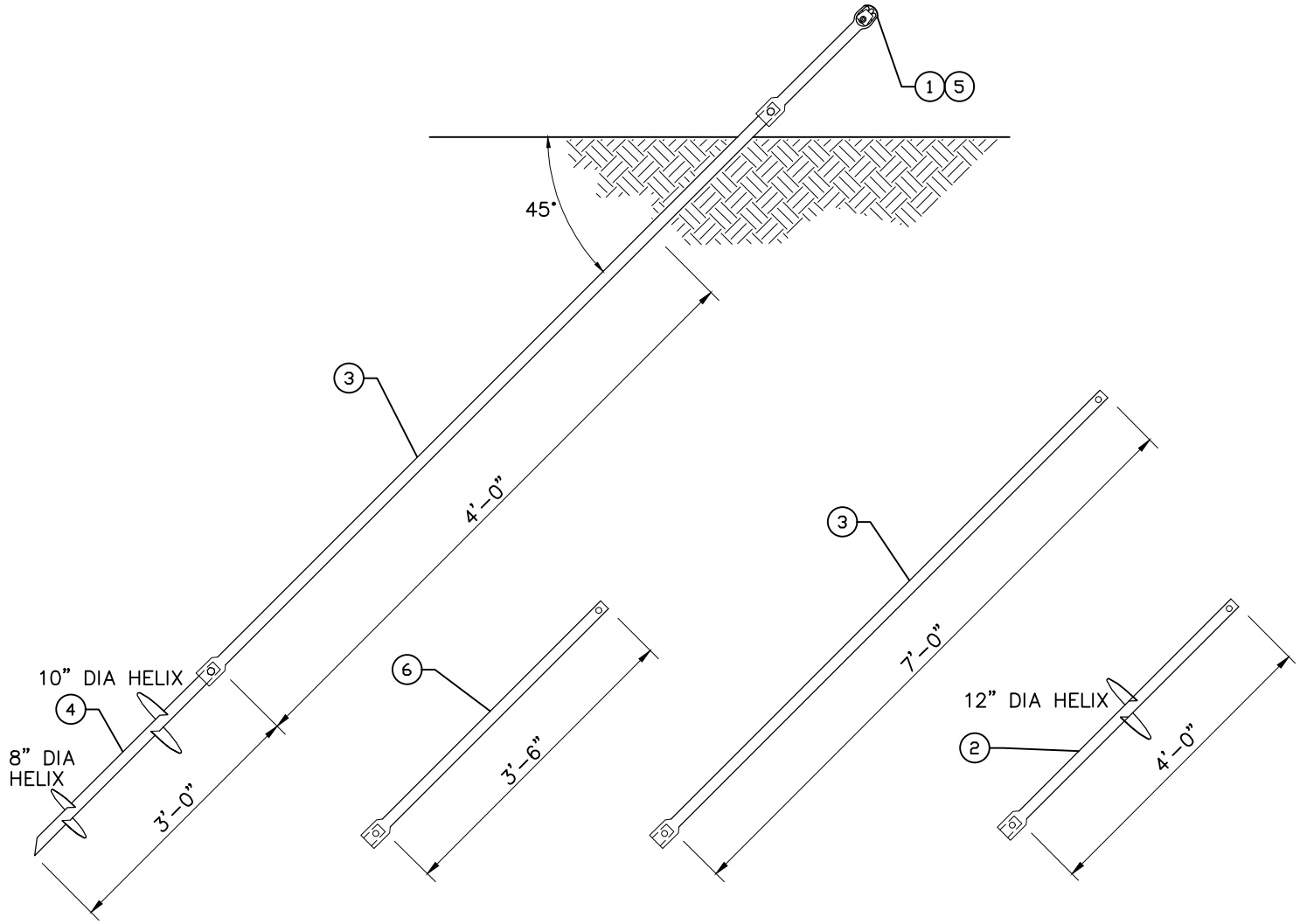

NOTES:

1) MAXIMUM WORKING LOAD VALUES BASED UPON USE OF ANCHOR IN CLASS 6 SOIL CONDITIONS.

2) MAXIMUM WORKING LOAD FOR THE TA-2H = 23,000 LBS.
MAXIMUM WORKING LOAD FOR THE TA-2H WITH THE TA-4HE = 32,000 LBS.

3) ANCHOR TO BE POWER INSTALLED USING TORQUE INDICATOR WITH A MINIMUM TORQUE VALUE OF:
2,300 FT.-LBS. FOR THE TA-2H
3,000 FT.-LBS. FOR THE TA-2H WITH THE TA-4HE
AND MAXIMUM OF 6,000 FT.-LBS.

4) WHEN SPECIFICALLY CALLED FOR ON THE PLAN & PROFILE AND/OR STAKING SHEETS, THE TA-4HE (ITEM 2) SHALL BE INSTALLED CONNECTED DIRECTLY TO THE DOUBLE HELIX ANCHOR ASSEMBLY (ITEM 4) WITH THE SEVEN FOOT EXTENSION ASSEMBLY (ITEM 3) THEN BEING CONNECTED TO THE TA-4HE.

DWG. REF.	LIST OF MATERIALS ea.	DESCRIPTION
1		ANCHOR – CLAMP, BONDING
2		ANCHOR – EXTENSION ASSEMBLY, 12" HELIX
		(1-1/2" SQUARE SHAFT x 4'-0")
3		ANCHOR – EXTENSION ASSEMBLY
		(1-1/2" SQUARE SHAFT x 7'-0")
4		ANCHOR – DOUBLE HELIX (8", 10")
		(1-1/2" SQUARE SHAFT x 3'-0")
5		ANCHOR – TWINEYE ASSEMBLY, FOR DOUBLE HELIX
6		ANCHOR – EXTENSION ASSEMBLY
		(1-1/2" SQUARE SHAFT x 3'-6")

GREENVILLE UTILITIES COMMISSION
GREENVILLE, NORTH CAROLINA

Greenville Utilities

TRANSMISSION AND DISTRIBUTION
ANCHOR ASSEMBLY

DWN. JLS	DATE: 03/14/19	DWG. NO.
CKD. KW	APPD. KW	
SCALE: N.T.S.		TA-2

DATE		DATE	REVISION

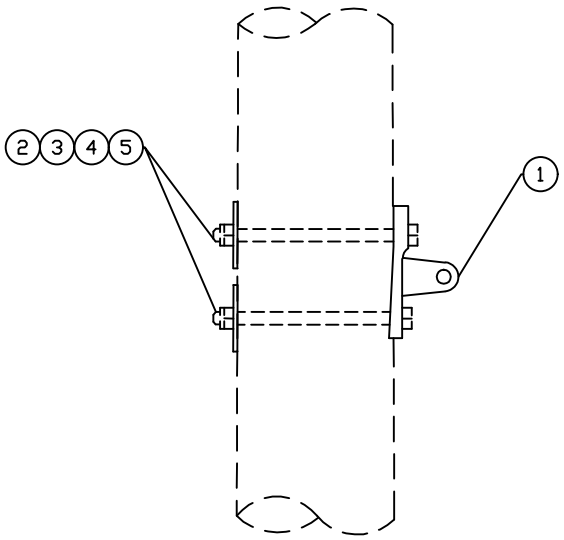

TG–27C

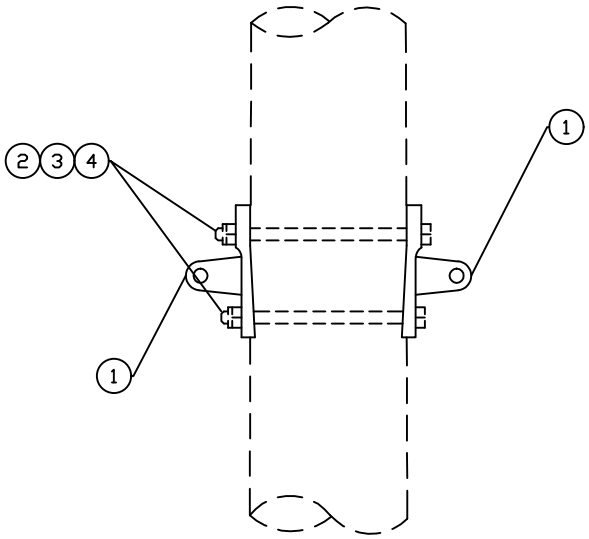

TG–27D

DWG. REF.	TG–27		LIST OF MATERIALS
	C	D	DESCRIPTION
1	1	2	TRANSMISSION GUY PLATE
2	2	2	BOLT, MACHINE, 3/4" x Required Length
3	2	2	SPRING LOCK WASHER, 3/4"
4	2	2	NUT, 3/4"
5	2	–	WASHER, SQUARE, 4" x 4" x 1/4" w/ 15/16"

GREENVILLE UTILITIES COMMISSION
GREENVILLE, NORTH CAROLINA

Greenville Utilities

TRANSMISSION AND DISTRIBUTION LINE
GUY ATTACHMENT UNITS

DWN. JLS		DATE: 03/12/19	
CKD. KW		APPD. KW	
SCALE: N.T.S.			
DATE		DATE	REVISION

DWG. NO.
TG–27

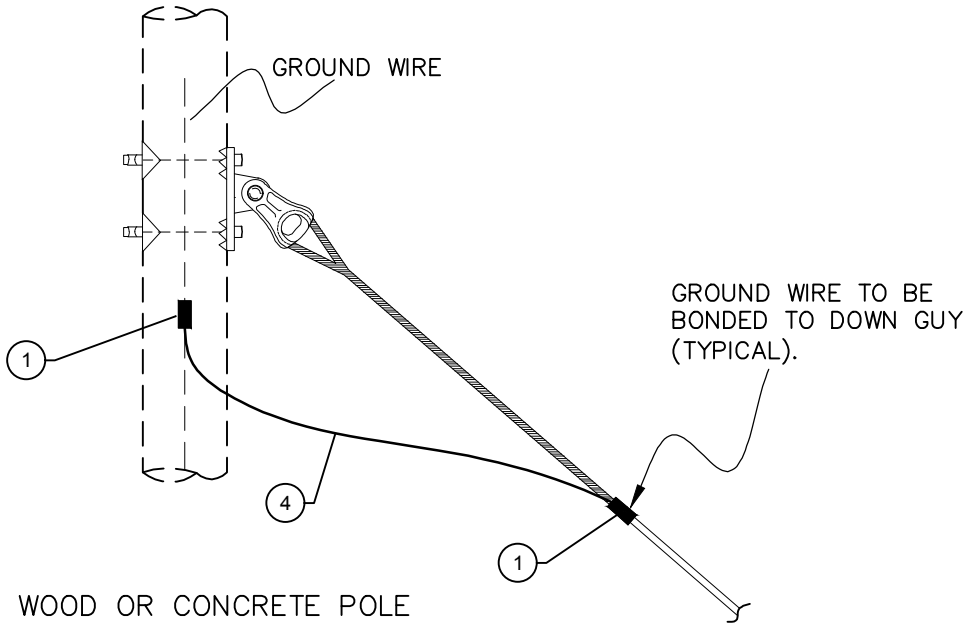

WOOD OR CONCRETE POLE

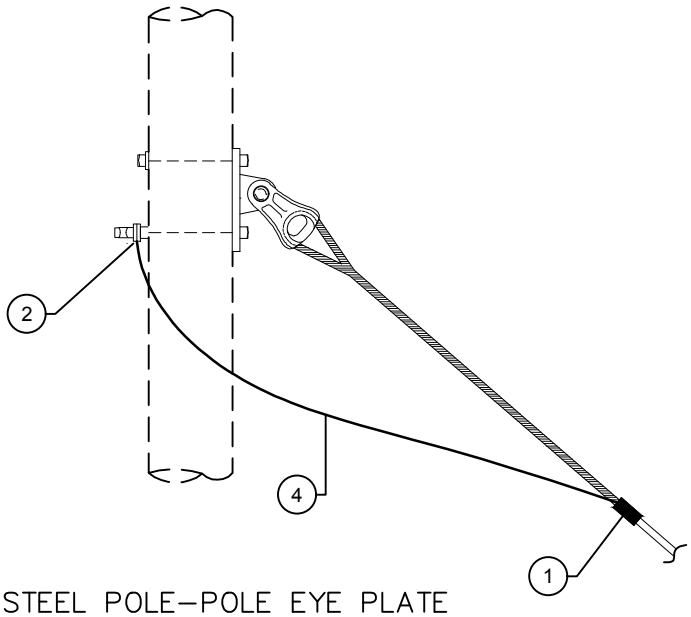

STEEL POLE–POLE EYE PLATE

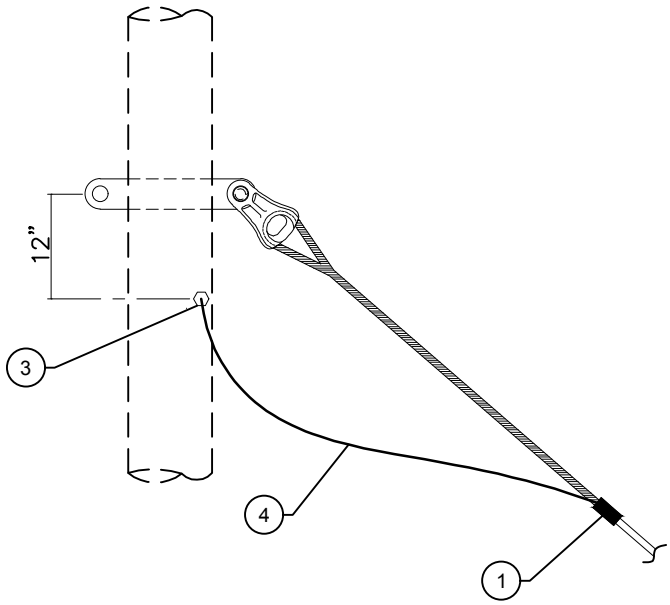

STEEL POLE–THRU VANG

DWG. REF.	LIST OF MATERIALS	
	ea.	DESCRIPTION
1	1	CONNECTOR – COMPRESSION, #4 S.D. TO #4 S.D.
2	1	BONDING CLIP, FOR #4 S.D.
3	1	CABLE TAP LUG, BRONZE BOLTED, FOR #4 S.D.
4	5	GROUND – WIRE, #4 S.D. (ft.)

GREENVILLE UTILITIES COMMISSION
GREENVILLE, NORTH CAROLINA

Greenville Utilities

TRANSMISSION GUY GROUNDING GUIDE

DWN. JLS		DATE: 03/14/19	
CKD. KW		APPD. KW	
SCALE: N.T.S.			
DATE		DATE	REVISION

DWG. NO.
TG–GG

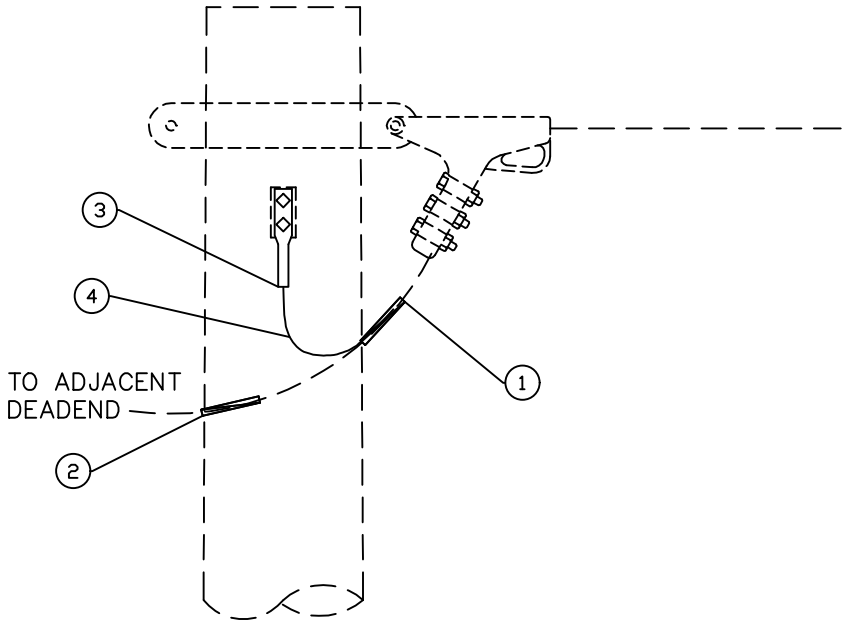

TM–2A SINGLE DEADEND
TM–2B DOUBLE DEADEND
TM–2C TRIPLE DEADEND

DWG. REF.	TM–2			LIST OF MATERIALS
	A	B	C	DESCRIPTION
1	1	1	1	CONNECTOR – COMPRESSION, OHGW TO #4
2	–	1	2	CONNECTOR – COMPRESSION SLEEVE OHGW TO OHGW
3	1	1	1	CONNECTOR – COMPRESSION, NEMA 2 HOLE #4
4	5	5	5	GROUND WIRE, #4 (ft.)

GREENVILLE UTILITIES COMMISSION
GREENVILLE, NORTH CAROLINA

TRANSMISSION OHGW STEEL POLE
DEADEND GROUNDING ASSEMBLY

DWN. JLS	DATE: 03/12/19
CKD. KW	APPD. KW
SCALE: N.T.S.	

DATE		DATE	REVISION

DWG. NO.
TM–2

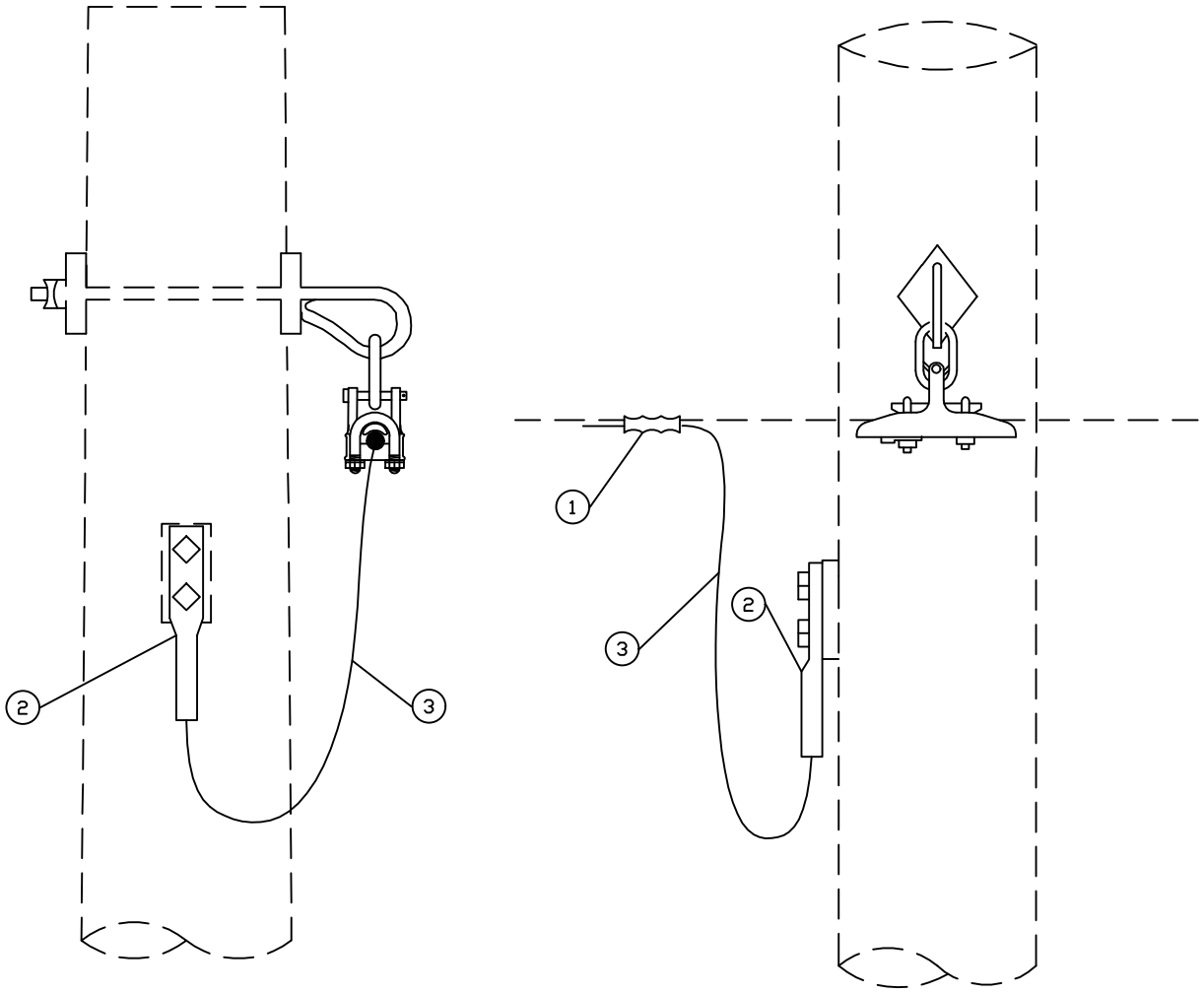

DWG. REF.	LIST OF MATERIALS	
	ea.	DESCRIPTION
1	1	CONNECTOR – COMPRESSION, BI–METALLIC, 7 No. 9
		ALUMOWELD TO #4
2	1	CONNECTOR – COMPRESSION, NEMA 2–HOLE FOR #4
3	5	GROUND – WIRE, #4 (ft.)

GREENVILLE UTILITIES COMMISSION
GREENVILLE, NORTH CAROLINA

Greenville Utilities

OVERHEAD GROUND WIRE GROUNDING ASSEMBLY – STEEL POLE

DWN. JLS		DATE: 03/13/19	
CKD. KW		APPD. KW	
SCALE: N.T.S.			
DATE		DATE	REVISION

DWG. NO.

TM–9X(S)

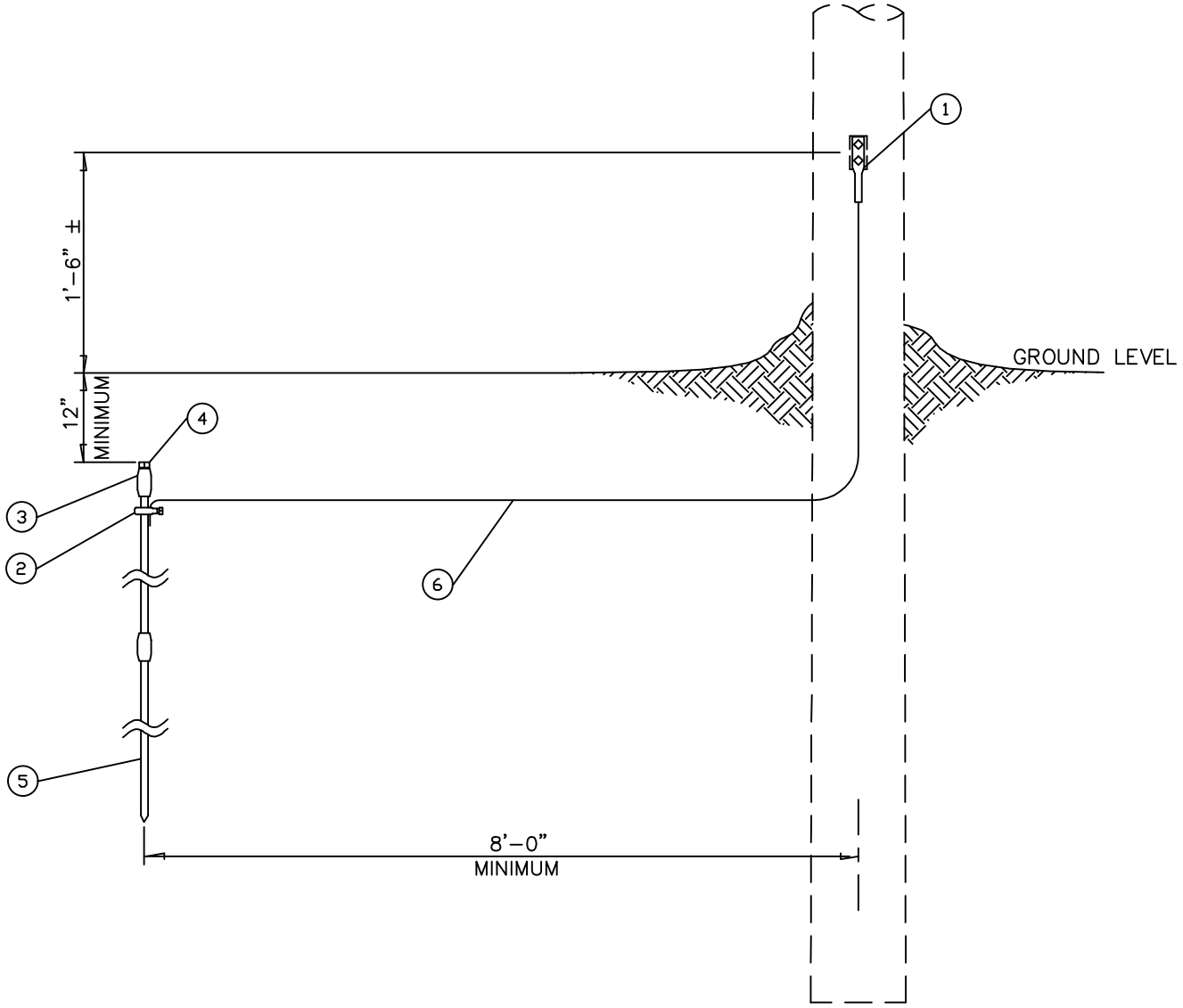

NOTES:

1) MAXIMUM GROUND RESISTANCE READING SHALL BE 25 OHMS. IF THE CLAMP–ON RESISTANCE MEASUREMENT IS USED, THE GROUND ROD SHALL BE INSTALLED AND TEMPORARILY BONDED UNTIL THE GROUND RESISTANCE READING IS TAKEN. ADDITIONAL ROD SECTIONS SHALL BE ADDED AS NECESSARY TO REDUCE RESISTANCE TO 25 OHMS MAXIMUM.

2) SPECIFY TM–9R FOR ADDITIONAL GROUND ROD SECTION AND COUPLING.

3) GROUND ROD TO BE INSTALLED IN UNDISTURBED SOIL.

DWG. REF.	TM–9		LIST OF MATERIALS
	SP	R	DESCRIPTION
1	1	–	CONNECTOR – COMPRESSION, NEMA 2 HOLE #4
2	1	–	GROUND – ROD CLAMP, GALVANIZED, 5/8"
3	1	1	GROUND – ROD COUPLING, GALVANIZED, 5/8" THREADED
4	1	–	GROUND – DRIVING STUD, STEEL, 5/8"
5	1	1	GROUND – ROD, GALVANIZED, 5/8" x 10'–0"
6	15	–	GROUND – WIRE, #4 (ft.)

GREENVILLE UTILITIES COMMISSION
GREENVILLE, NORTH CAROLINA

Greenville Utilities

DRIVEN GROUND ROD GROUNDING ASSEMBLY – STEEL POLE

DWN. JLS		DATE: 03/13/19	
CKD. KW		APPD. KW	
SCALE: N.T.S.			
DATE		DATE	REVISION

DWG. NO.
TM–9

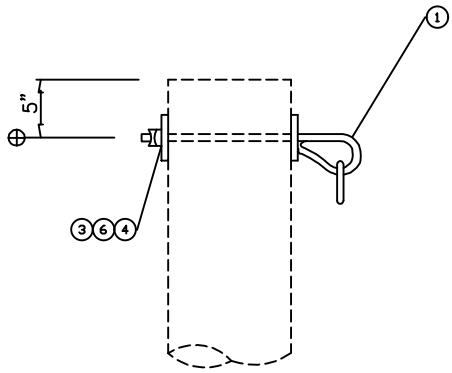

SINGLE BOLT O.H.G.W. SUPPORT
TM–6A(S)

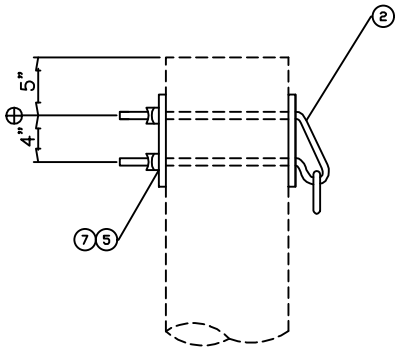

DOUBLE BOLT O.H.G.W. SUPPORT
TM–6B(S)

NOTES

1. Designated strength limitations of the overhead groundwire support assemblies are:

	Allowable Vertical Load
TM–6A(S)	5,000 lbs.
TM–6B(S)	5,000 lbs.

DWG. REF.	TM–6		LIST OF MATERIALS
	A	B	DESCRIPTION
1	1	–	SUPPORT, SINGLE BOLT OHGW, 3/4"
2	–	1	SUPPORT, DOUBLE BOLT OHGW, 5/8"
3	1	–	WASHER, SQUARE, 4" x 4" x 1/4" w/ 15/16"
4	1	–	NUT, 3/4"
5	–	2	NUT, 5/8"
6	1	–	SPRING LOCK WASHER, 3/4"
7	–	2	SPRING LOCK WASHER, 5/8"

GREENVILLE UTILITIES COMMISSION
GREENVILLE, NORTH CAROLINA

Greenville Utilities

O.H.G.W. SUPPORT ASSEMBLY FOR STEEL POLES

DWN. JLS		DATE: 02/26/19	
CKD. KW		APPD. KW	
SCALE: N.T.S.			
DATE		DATE	REVISION

DWG. NO.
TM–6(S)

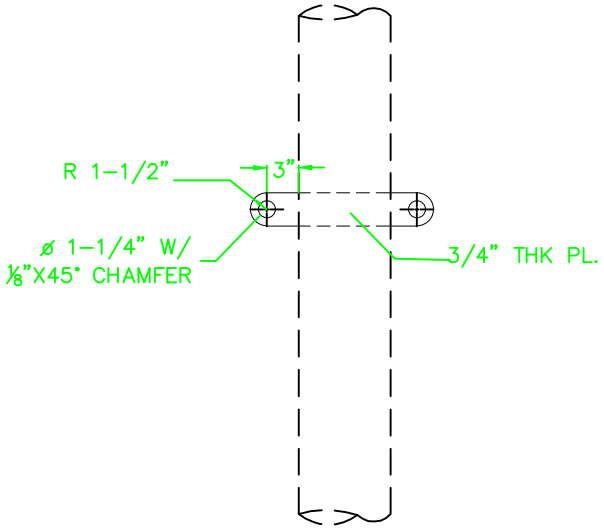

STEEL POLE THRU VANG

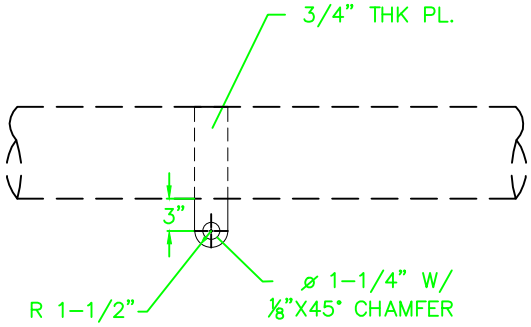

CROSSARM THRU VANG

DWG. REF.	LIST OF MATERIALS	
	ea.	DESCRIPTION

GREENVILLE UTILITIES COMMISSION
GREENVILLE, NORTH CAROLINA

STEEL POLE/CROSSARM THRU VANG

DWN. JLS		DATE: 04/01/19	
CKD. KW		APPD. KW	
SCALE: N.T.S.			
DATE		DATE	REVISION

DWG. NO.

TV–1

NOTES:

1. THE TABLE BELOW SHALL BE COMPLETED FOR EACH PROJECT.
2. SUITABLE SUSPENSION CLAMPS MUST BE SELECTED FOR THE CONDUCTOR BEING USED. THE FOLLOWING ARE TO BE CONSIDERED: TYPE OF CONDUCTOR, DIAMETER OF CONDUCTOR (CONSIDERING ARMOR RODS AND/OR LINERS), ETC.
3. THE CAPACITY OF THE HARDWARE MUST BE EQUAL TO OR GREATER THAN THE SPECIFIED MECHANICAL LOAD OF THE INSULATOR UNITS SHOWN IN THE TABLE BELOW.

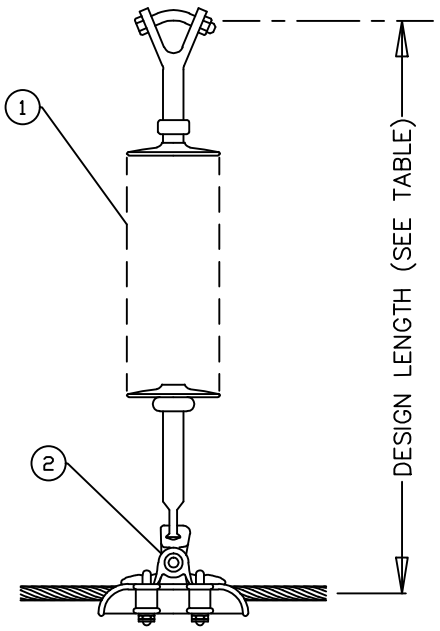

TANGENT ASSEMBLY
TM–1AM (OR) TM–1BM

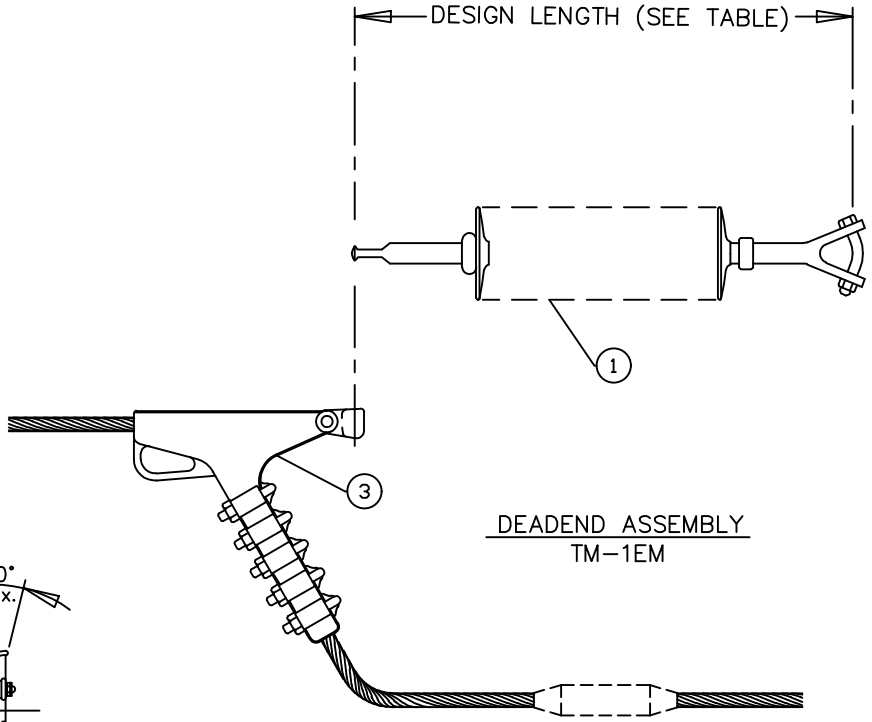

DEADEND ASSEMBLY
TM–1EM

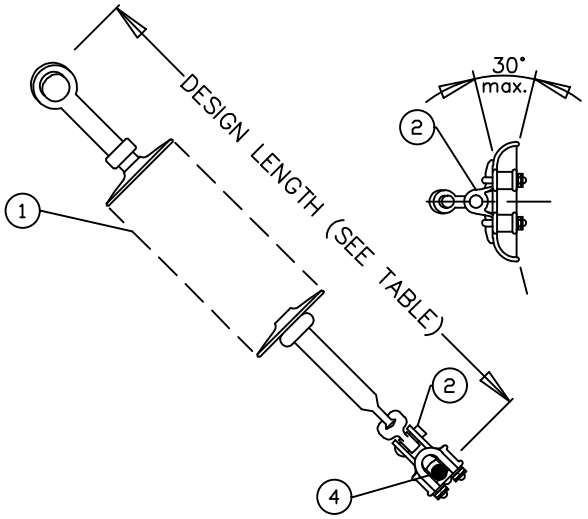

ANGLE ASSEMBLY
TM–1CM

115 KV	ASSEMBLY		
	TANGENT	ANGLE	DEADEND
QUANTITY OF UNITS	1	1	1
INSULATION LEVEL (kV)	138	138	138
LEAKAGE DISTANCE (in.)	139	139	139
SPEC. MECH. LOAD (lb.)	25,000	25,000	25,000
INSULATOR WEIGHT (lb.)	11.9	11.9	11.9
DESIGN LENGTH (in.)	59.6	59.6	59.6
COLOR OF UNITS	GRAY	GRAY	GRAY

DWG. REF.	LIST OF MATERIALS	
	ITEM	DESCRIPTION
1		INSULATOR, SUSPENSION. POLYMER
2		CLAMP, SUSPENSION x REQ. CONDUCTOR SIZE
3		DEADEND SHOE, x REQ. CONDUCTOR SIZE
4	*	ARMOR ROD x REQ. CONDUCTOR SIZE
5		CORONA RING FOR 115 KV INSULATOR
	*	Armor Rod not required if suspension clamp is cushioned

GREENVILLE UTILITIES COMMISSION
GREENVILLE, NORTH CAROLINA

Greenville Utilities

SUSPENSION INSULATOR ASSEMBLY

DWN. JLS	DATE: 03/11/19	DWG. NO.
CKD. KW	APPD. KW	TM–1
SCALE: N.T.S.		

DATE	DATE	REVISION

NOTES:

1. THE TABLE BELOW SHALL BE COMPLETED FOR EACH PROJECT.

2. SUITABLE SUSPENSION CLAMPS MUST BE SELECTED FOR THE CONDUCTOR BEING USED. THE FOLLOWING ARE TO BE CONSIDERED: TYPE OF CONDUCTOR, DIAMETER OF CONDUCTOR (CONSIDERING ARMOR RODS AND/OR LINERS), ETC.

3. THE CAPACITY OF THE HARDWARE MUST BE EQUAL TO OR GREATER THAN THE SPECIFIED MECHANICAL LOAD OF THE INSULATOR UNITS SHOWN IN THE TABLE BELOW.

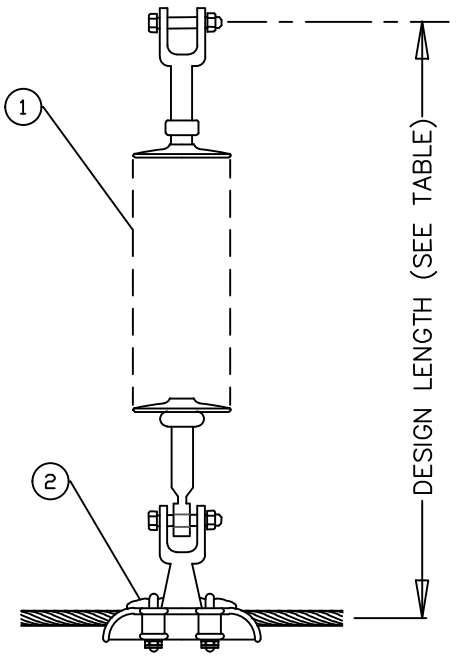

TANGENT ASSEMBLY
STM-1AM (OR) STM-1BM

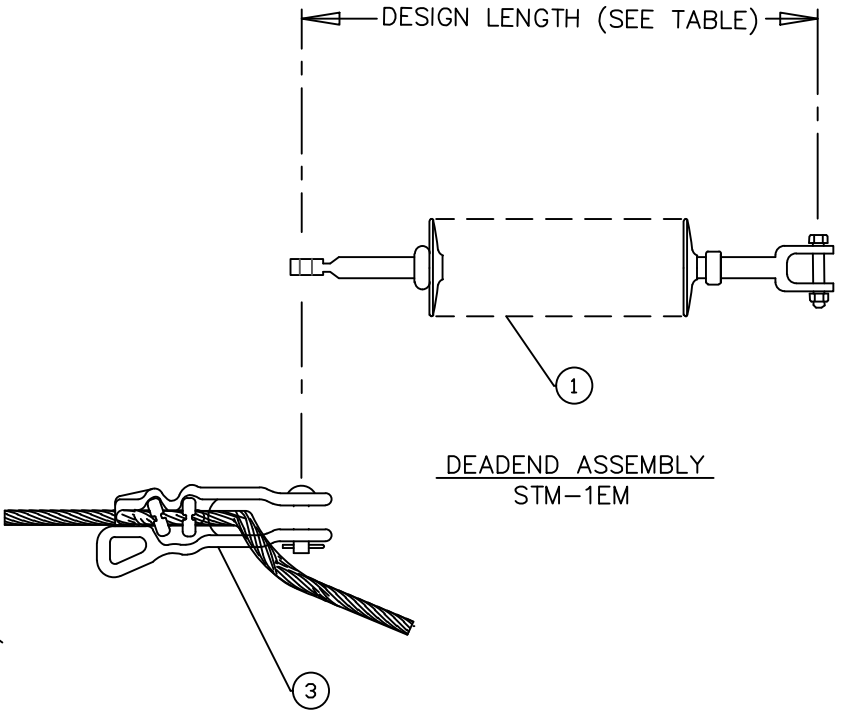

DEADEND ASSEMBLY
STM-1EM

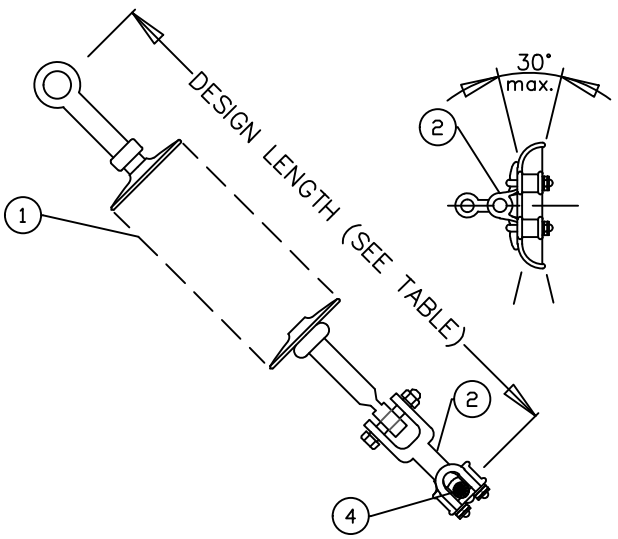

ANGLE ASSEMBLY
STM-1CM

35 KV STOCK NUMBER: 208330	ASSEMBLY		
	TANGENT	ANGLE	DEADEND
QUANTITY OF UNITS	1	1	1
INSULATION LEVEL (kV)	42	42	42
LEAKAGE DISTANCE (in.)	33	33	33
SPEC. MECH. LOAD (lb.)	10,000	10,000	10,000
INSULATOR WEIGHT (lb.)	2.8	2.8	2.8
DESIGN LENGTH (in.)	25.0	25.0	25.0
COLOR OF UNITS	GRAY	GRAY	GRAY

LIST OF MATERIALS

DWG. REF.	ITEM	DESCRIPTION
1		INSULATOR, SUSPENSION. POLYMER
2		CLAMP, SUSPENSION x REQ. CONDUCTOR SIZE
3		DEADEND SHOE, x REQ. CONDUCTOR SIZE
4	*	ARMOR ROD x REQ. CONDUCTOR SIZE
5		
	*	Armor Rod not required if suspension clamp is cushioned

GREENVILLE UTILITIES COMMISSION
GREENVILLE, NORTH CAROLINA

Greenville Utilities

SUSPENSION INSULATOR ASSEMBLY

DWN. DRB	DATE: 06/01/2022	DWG. NO.
CKD. JLS	APPD. JLS	STM-1
SCALE: N.T.S.		

DATE	DATE	REVISION

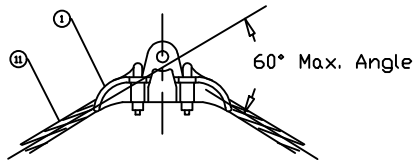

TANGENT & ANGLE CLAMP
TM-4A

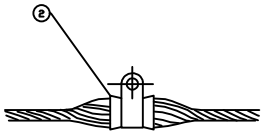

TANGENT ASSEMBLY
TM-4B

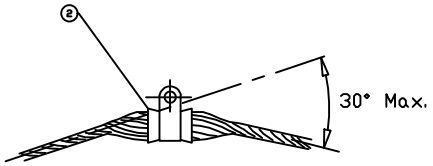

TYPE 1

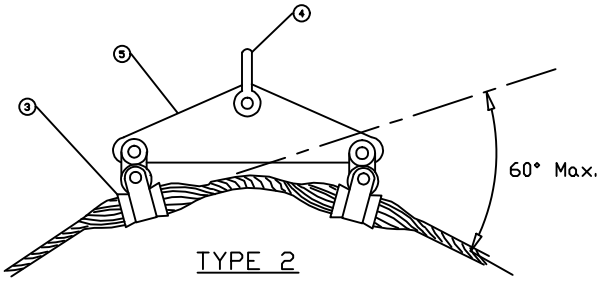

TYPE 2

ANGLE ASSEMBLY
TM-4C (NOTE 1)

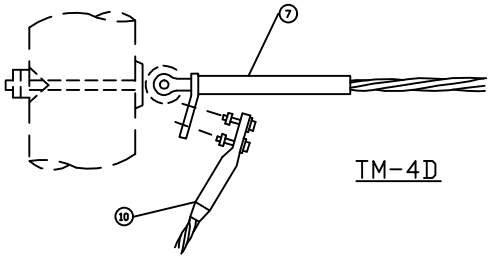

TM-4D

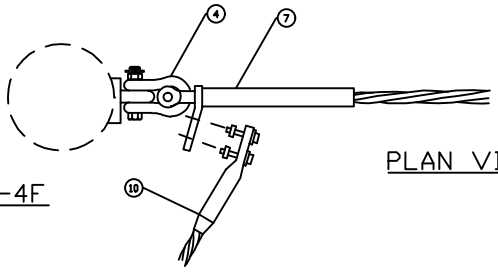

TM-4F

PLAN VIEW

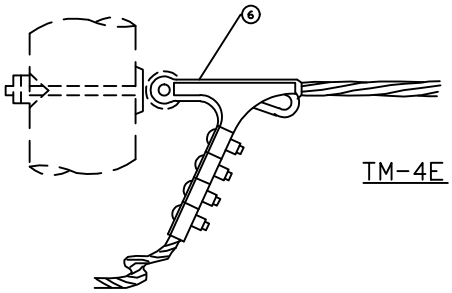

TM-4E

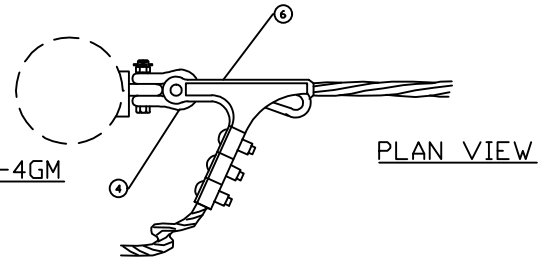

TM-4GM

PLAN VIEW

DEADEND ASSEMBLY

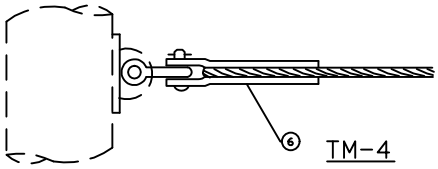

TM-4

NOTES:

1. The appropriate cushioned suspension angle assembly shall be installed for the line angles shown on the plan-profile drawings:
   - A. For angles from 0 degrees to 30 degrees, use type 1
   - B. For angles from 30 degrees to 60 degrees use type 2

DWG. REF.	ITEM	LIST OF MATERIALS DESCRIPTION
1		CLAMP, SUSPENSION (TO 60°)
2		CLAMP, CUSHIONED SUSPENSION
3		CLAMP, CUSHIONED SUSP. & CLEVIS EYE
4		ANCHOR SHACKLE 40,000 LBS. BNC
5		YOLK PLATE
6		CLAMP BOLTED DEADEND (3 BOLT)
7		CLAMP, COMPRESSION DEADEND
8		LINK, EXTENSION, CLEVIS 6"
9		JUMPER CONNECTOR, COMPRESSION
10		JUMPER TERMINAL, COMPRESSION
11		ARMOR ROD

GREENVILLE UTILITIES COMMISSION
GREENVILLE, NORTH CAROLINA

Greenville Utilities

O.H.G.W. ASSEMBLIES CUSHIONED SUSPENSION AND SUSPENSION CLAMPS

DWN. JLS		DATE: 02/27/19	
CKD. KW		APPD. KW	
SCALE: N.T.S.			
DATE		DATE	REVISION

DWG. NO.
TM-4

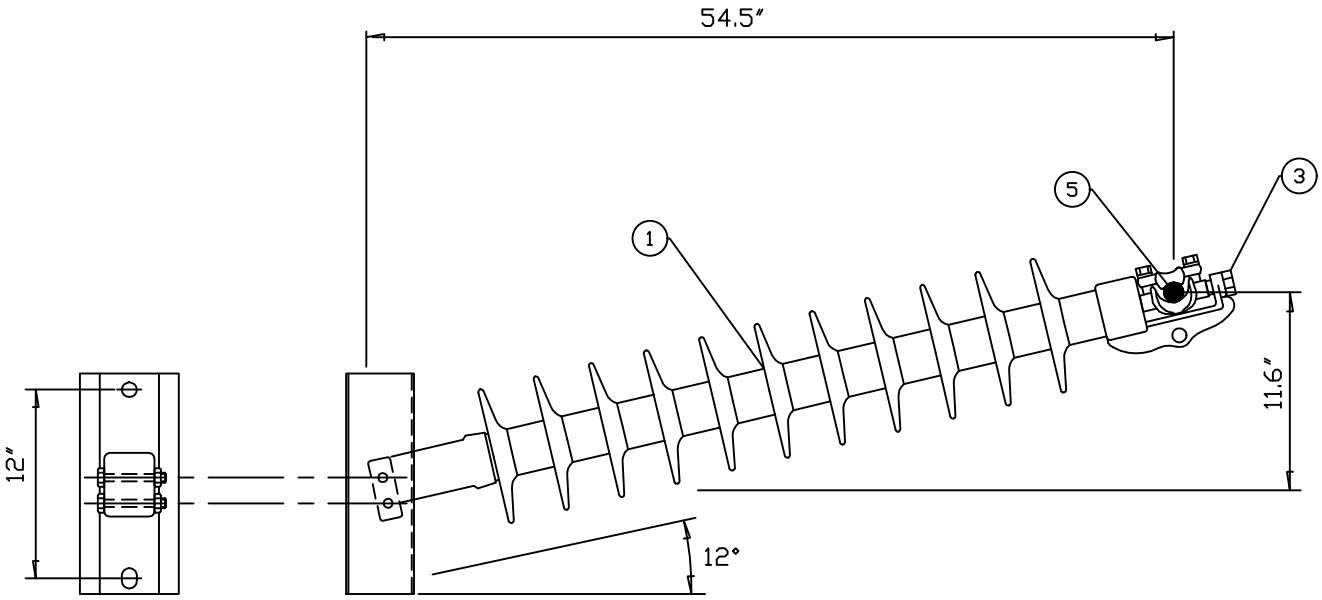

TM-3BM - HORIZONTAL POST INSULATOR

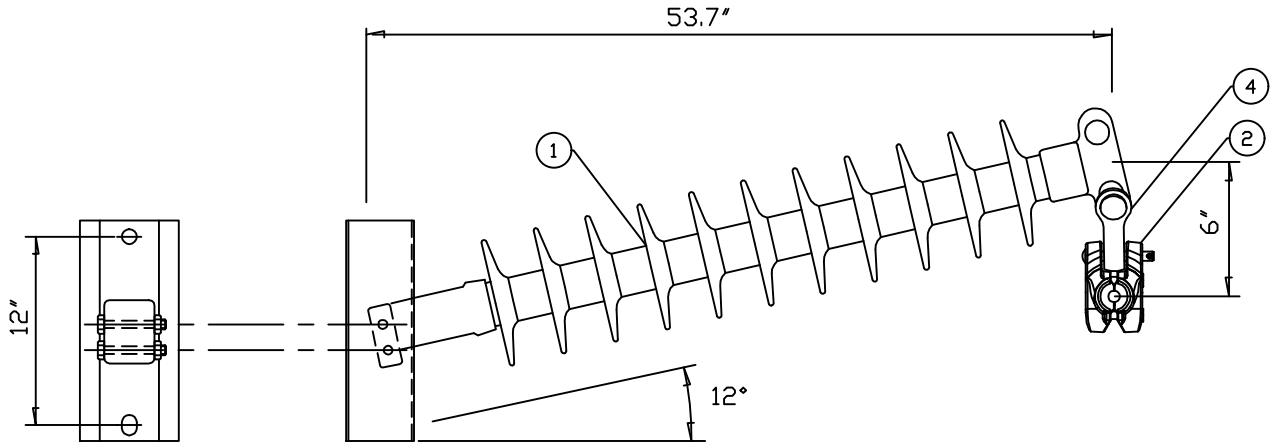

TM-3DM - HORIZONTAL POST INSULATOR - TANGENT & SMALL ANGLE

DWG. REF.	TM-3		LIST OF MATERIALS
	BM	DM	DESCRIPTION
1	1	1	INSULATOR, POLYMER HORIZONTAL POST
2	–	1	CLAMP, SUSPENSION x REQ. CONDUCTOR SIZE
3	1	–	CLAMP, TRUNION x REQ. CONDUCTOR SIZE
4	–	1	Y-CLEVIS, BALL
5	1	*	ARMOR ROD x REQ. CONDUCTOR SIZE
		*	Armor Rod not required if suspension clamp is cushioned

GREENVILLE UTILITIES COMMISSION
GREENVILLE, NORTH CAROLINA

Greenville Utilities

HORIZONTAL POST INSULATOR ASSEMBLY

DWN. JLS		DATE: 03/01/19	
CKD. KW		APPD. KW	
SCALE: N.T.S.			
DATE		DATE	REVISION

DWG. NO.
TM-3

NOTES:

1. HOLE DIAMETER SHALL BE EQUAL TO THE POLE BUTT DIAMETER PLUS 18", UNLESS OTHERWISE NOTED.
2. SETTING DEPTH SEE POLE DRAWING
3. ABC STONE BACKFILL TO BE PLACED AND PNEUMATICALLY TAMPED IN 6" LIFTS.

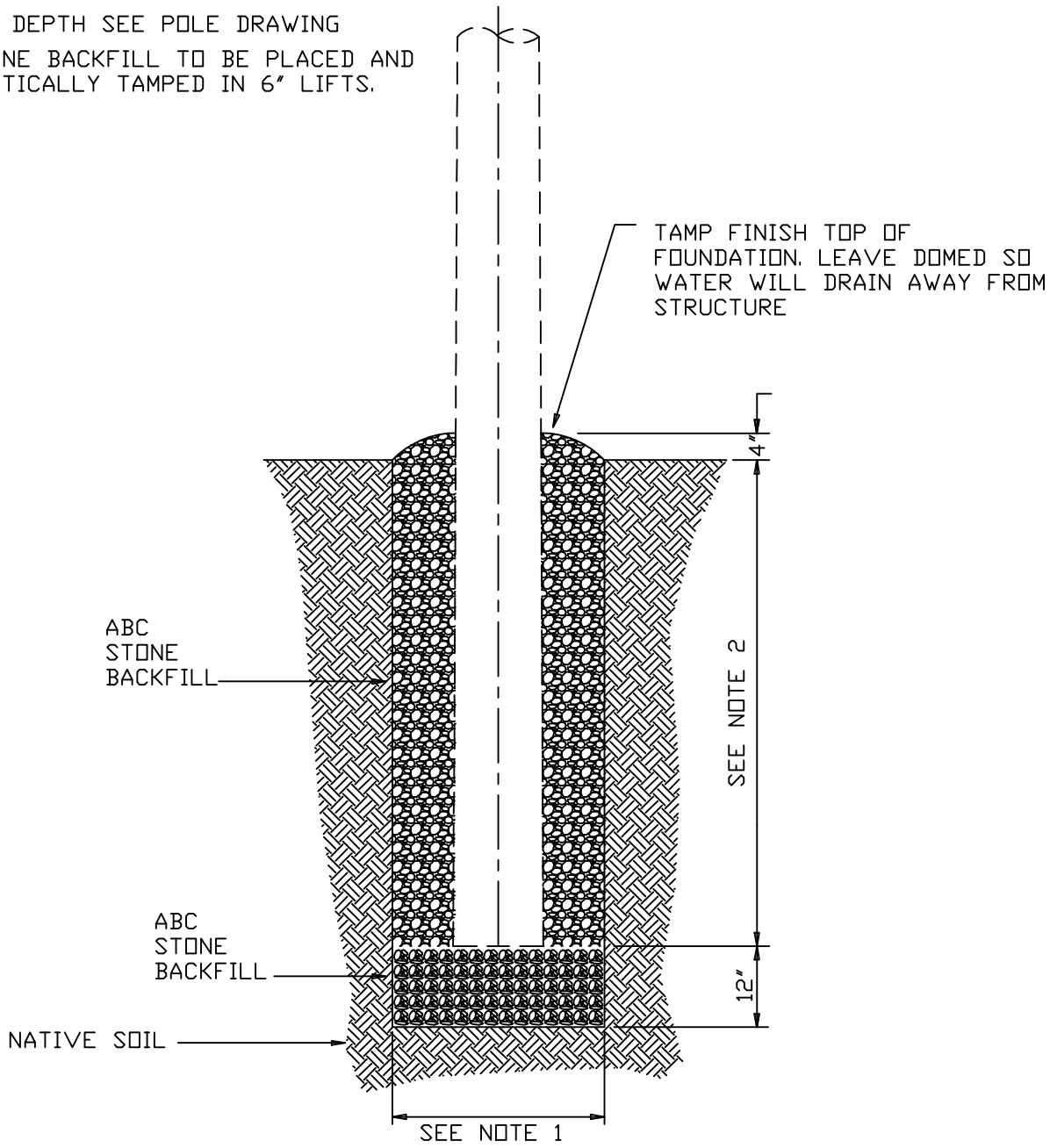

DWG. REF.	LIST OF MATERIALS	
	ea.	DESCRIPTION
	*	ABC STONE BACKFILL
		* SIGNIFIES AS REQUIRED

GREENVILLE UTILITIES COMMISSION
GREENVILLE, NORTH CAROLINA

Greenville Utilities

ABC STONE BACKFILL FOUNDATION

DWN. JLS		DATE: 02/27/19	
CKD. KW		APPD. KW	
SCALE: N.T.S.			
DATE		DATE	REVISION

DWG. NO.

TMF-EMB

Appendix J: Sag-Tension Charts

[Balance of Page Left Blank Intentionally]

CLIENT :ELECTRICITIES OF NORTH CAROLINA
TRANSMISSION LINE :DISTRIBUTION CONDUCTOR SAG DATA
JOB NUMBER :96-4385-0001
DATE :04-29-1996

***** INITIAL STRINGING SAG TABLE *****

CONDUCTOR DESCRIPTION :1272 MCM (1350)

LOADING DISTRICT :MEDIUM

DESIGN TENSION : 27.2 % ULTIMATE 22000 LBS.

RULING SPAN : 250.00 FT

SAG IS GIVEN IN INCHES ,TO THE NEAREST INCH ,FOR EACH SPAN AND TEMPERATURE ,BASED UPON NO ICE LOAD.

	TEMPERATURE - DEGREES F						
	32	40	50	60	70	80	90
AN	SPAN SAG - INCHES						
150.	9.	10.	12.	13.	14.	16.	17.
160.	11.	12.	13.	15.	16.	18.	19.
170.	12.	13.	15.	17.	18.	20.	22.
180.	14.	15.	17.	19.	20.	22.	24.
190.	15.	17.	19.	21.	23.	25.	27.
200.	17.	18.	21.	23.	25.	28.	30.
210.	18.	20.	23.	25.	28.	30.	33.
220.	20.	22.	25.	28.	30.	33.	36.
230.	22.	24.	27.	30.	33.	36.	40.
240.	24.	26.	30.	33.	36.	40.	43.
250.	26.	29.	32.	36.	39.	43.	47.
260.	28.	31.	35.	39.	43.	47.	50.
270.	31.	33.	38.	42.	46.	50.	54.
280.	33.	36.	40.	45.	49.	54.	59.
290.	35.	39.	43.	48.	53.	58.	63.
300.	38.	41.	46.	51.	57.	62.	67.
310.	40.	44.	49.	55.	61.	66.	72.
320.	43.	47.	53.	59.	64.	71.	76.
330.	46.	50.	56.	62.	69.	75.	81.
340.	48.	53.	59.	66.	73.	80.	86.
TENSION LBS.	4274.	3900.	3488.	3137.	2844.	2601.	2399.

CLIENT :ELECTRICITIES OF NORTH CAROLINA
TRANSMISSION LINE :DISTRIBUTION CONDUCTOR SAG DATA
JOB NUMBER :96-4385-0001
DATE :04-29-1996

***** INITIAL STRINGING SAG TABLE *****

CONDUCTOR DESCRIPTION :795 MCM (1350)

LOADING DISTRICT :MEDIUM

DESIGN TENSION : 35.9 % ULTIMATE 13900 LBS.

RULING SPAN : 250.00 FT

SAG IS GIVEN IN INCHES ,TO THE NEAREST INCH ,FOR EACH SPAN AND TEMPERATURE ,BASED UPON NO ICE LOAD.

	TEMPERATURE - DEGREES F						
	32	40	50	60	70	80	90
AN	SPAN SAG - INCHES						
150.	7.	7.	8.	9.	10.	12.	13.
160.	8.	8.	9.	11.	12.	13.	15.
170.	9.	9.	11.	12.	13.	15.	17.
180.	10.	11.	12.	13.	15.	17.	19.
190.	11.	12.	13.	15.	17.	19.	21.
200.	12.	13.	15.	16.	19.	21.	23.
210.	13.	14.	16.	18.	20.	23.	26.
220.	14.	16.	18.	20.	22.	25.	28.
230.	16.	17.	19.	22.	24.	28.	31.
240.	17.	19.	21.	24.	27.	30.	33.
250.	18.	20.	23.	26.	29.	33.	36.
260.	20.	22.	25.	28.	31.	35.	39.
270.	22.	24.	27.	30.	34.	38.	42.
280.	23.	25.	29.	32.	36.	41.	45.
290.	25.	27.	31.	35.	39.	44.	49.
300.	27.	29.	33.	37.	42.	47.	52.
310.	28.	31.	35.	39.	44.	50.	56.
320.	30.	33.	37.	42.	47.	53.	59.
330.	32.	35.	40.	45.	50.	57.	63.
340.	34.	38.	42.	47.	53.	60.	67.
TENSION LBS.	3775.	3456.	3076.	2727.	2418.	2152.	1931.

CLIENT :ELECTRICITIES OF NORTH CAROLINA
TRANSMISSION LINE :DISTRIBUTION CONDUCTOR SAG DATA
JOB NUMBER :96-4385-0001
DATE :04-29-1996

***** INITIAL STRINGING SAG TABLE *****

CONDUCTOR DESCRIPTION :336.4 MCM 18/1 ACSR

LOADING DISTRICT :MEDIUM

DESIGN TENSION : 34.5 % ULTIMATE 8680 LBS.

RULING SPAN : 250.00 FT

SAG IS GIVEN IN INCHES ,TO THE NEAREST INCH ,FOR EACH SPAN AND TEMPERATURE ,BASED UPON NO ICE LOAD.

	TEMPERATURE - DEGREES F						
	32	40	50	60	70	80	90
AN	SPAN SAG - INCHES						
150.	6.	6.	7.	8.	9.	10.	11.
160.	6.	7.	8.	9.	10.	11.	13.
170.	7.	8.	9.	10.	11.	13.	14.
180.	8.	9.	10.	11.	13.	14.	16.
190.	9.	10.	11.	12.	14.	16.	18.
200.	10.	11.	12.	14.	15.	18.	20.
210.	11.	12.	13.	15.	17.	19.	22.
220.	12.	13.	15.	16.	19.	21.	24.
230.	13.	14.	16.	18.	20.	23.	26.
240.	14.	16.	17.	20.	22.	25.	28.
250.	16.	17.	19.	21.	24.	27.	31.
260.	17.	18.	20.	23.	26.	30.	33.
270.	18.	20.	22.	25.	28.	32.	36.
280.	20.	21.	24.	27.	30.	34.	39.
290.	21.	23.	25.	29.	32.	37.	41.
300.	22.	24.	27.	31.	35.	39.	44.
310.	24.	26.	29.	33.	37.	42.	47.
320.	26.	28.	31.	35.	40.	45.	51.
330.	27.	29.	33.	37.	42.	48.	54.
0.	29.	31.	35.	39.	45.	51.	57.
TENSION LBS.	2201.	2027.	1813.	1609.	1420.	1254.	1111.

CLIENT :ELECTRICITIES OF NORTH CAROLINA
TRANSMISSION LINE :DISTRIBUTION CONDUCTOR SAG DATA
JOB NUMBER :96-4385-0001
DATE :04-26-1996

***** INITIAL STRINGING SAG TABLE *****

CONDUCTOR DESCRIPTION :1/0 AWG 6/1 ACSR

LOADING DISTRICT :MEDIUM

DESIGN TENSION : 36.9 % ULTIMATE 4380 LBS.

RULING SPAN : 250.00 FT

SAG IS GIVEN IN INCHES ,TO THE NEAREST INCH ,FOR EACH SPAN AND TEMPERATURE ,BASED UPON NO ICE LOAD.

	TEMPERATURE - DEGREES F						
	32	40	50	60	70	80	90
SPAN	SPAN SAG - INCHES						
150.	4.	5.	5.	5.	6.	6.	7.
160.	5.	5.	6.	6.	7.	7.	8.
170.	6.	6.	6.	7.	8.	8.	9.
180.	6.	7.	7.	8.	8.	9.	10.
190.	7.	7.	8.	9.	9.	10.	11.
200.	8.	8.	9.	10.	10.	11.	13.
210.	9.	9.	10.	11.	12.	13.	14.
220.	9.	10.	11.	12.	13.	14.	15.
230.	10.	11.	12.	13.	14.	15.	17.
240.	11.	12.	13.	14.	15.	16.	18.
250.	12.	13.	14.	15.	16.	18.	20.
260.	13.	14.	15.	16.	18.	19.	21.
270.	14.	15.	16.	17.	19.	21.	23.
280.	15.	16.	17.	19.	20.	22.	25.
290.	16.	17.	19.	20.	22.	24.	26.
300.	17.	18.	20.	22.	24.	26.	28.
310.	19.	20.	21.	23.	25.	27.	30.
320.	20.	21.	23.	25.	27.	29.	32.
330.	21.	22.	24.	26.	28.	31.	34.
340.	22.	24.	26.	28.	30.	33.	36.
TENSION LBS.	1119.	1060.	985.	910.	836.	764.	693.

Greenville Utilities Commission
7 #9 Alumoweld

Span Geometry and Properties
Span Horizontal Projection 250 (ft)
Span Vertical Projection 0 (ft)
Sagging Wire Temperature 60 (deg F)
Sagging Wire Condition 'Initial'
Sagging Method 'Autosag'
Sagging Wire to Automatic Sagging Tension Limits
Sagging Horizontal Component of Tension 819.3 (lbs)
Sagging Mid Span Sag 1.97975 (ft) (equivalent to input sagging tension)

Cable Data Report
Name and description: 7no_9_alumoweld.wir 7#9 Alumoweld 7 Strands Alumoweld - Adapted from 1970's Publicly Available Data
Cable model: Nonlinear cable model (separate polynomials for initial and creep behavior for inner and outer materials).
Cross section area 0.071980 (in^2)
Weight per unit length 0.2076 (lbs/ft)
Outside diameter 0.343 (in)
Ultimate tension 12630 (lbs)

Stringing Chart Report

Note: Temperature and condition above are program supplied defaults used for automatic sagging.
Weather case for final after creep 60 Deg F, Equivalent to 19.2 (deg F) temperature increase
Weather cases for final after load:
'NESC Medium District Loading (250B)'
'NESC Extreme Wind (250C)'
'NESC Concurrent Ice and Wind (250D)' (controlling case), Equivalent to 15.6 (deg F) temperature increase
'Extreme Ice'
Results below for condition 'Initial RS'
Calculations assume equal attachment height elevations

Span Length (ft)	Mid Span Sag 20 F (ft)	Mid Span Sag 30 F (ft)	Mid Span Sag 40 F (ft)	Mid Span Sag 50 F (ft)	Mid Span Sag 60 F (ft)	Mid Span Sag 70 F (ft)	Mid Span Sag 80 F (ft)	Mid Span Sag 90 F (ft)	Mid Span Sag 100 F (ft)
100.0	0.23	0.25	0.27	0.29	0.32	0.34	0.37	0.40	0.43
110.0	0.28	0.30	0.33	0.35	0.38	0.42	0.45	0.49	0.52
120.0	0.33	0.36	0.39	0.42	0.46	0.50	0.54	0.58	0.62
130.0	0.39	0.42	0.46	0.49	0.54	0.58	0.63	0.68	0.73
140.0	0.45	0.49	0.53	0.57	0.62	0.67	0.73	0.79	0.84
150.0	0.52	0.56	0.61	0.66	0.71	0.77	0.84	0.90	0.97
160.0	0.59	0.63	0.69	0.75	0.81	0.88	0.95	1.03	1.10
170.0	0.66	0.72	0.78	0.84	0.92	0.99	1.08	1.16	1.25
180.0	0.74	0.80	0.87	0.95	1.03	1.11	1.21	1.30	1.40
190.0	0.83	0.90	0.97	1.06	1.15	1.24	1.34	1.45	1.56
200.0	0.92	0.99	1.08	1.17	1.27	1.38	1.49	1.61	1.72
210.0	1.01	1.09	1.19	1.29	1.40	1.52	1.64	1.77	1.90
220.0	1.11	1.20	1.30	1.41	1.54	1.66	1.80	1.94	2.09
230.0	1.21	1.31	1.43	1.55	1.68	1.82	1.97	2.12	2.28
240.0	1.32	1.43	1.55	1.68	1.83	1.98	2.14	2.31	2.48
250.0	1.43	1.55	1.68	1.83	1.98	2.15	2.33	2.51	2.69
260.0	1.55	1.68	1.82	1.98	2.14	2.32	2.52	2.71	2.91
270.0	1.67	1.81	1.96	2.13	2.31	2.51	2.71	2.93	3.14
280.0	1.80	1.94	2.11	2.29	2.49	2.70	2.92	3.15	3.38
290.0	1.93	2.09	2.27	2.46	2.67	2.89	3.13	3.38	3.63
300.0	2.06	2.23	2.42	2.63	2.85	3.10	3.35	3.61	3.88
310.0	2.20	2.38	2.59	2.81	3.05	3.31	3.58	3.86	4.14
320.0	2.35	2.54	2.76	2.99	3.25	3.52	3.81	4.11	4.41
330.0	2.50	2.70	2.93	3.18	3.45	3.75	4.05	4.37	4.69
340.0	2.65	2.87	3.11	3.38	3.67	3.98	4.30	4.64	4.98
350.0	2.81	3.04	3.30	3.58	3.89	4.21	4.56	4.92	5.28
360.0	2.97	3.21	3.49	3.79	4.11	4.46	4.83	5.20	5.59
370.0	3.14	3.40	3.69	4.00	4.34	4.71	5.10	5.50	5.90
380.0	3.31	3.58	3.89	4.22	4.58	4.97	5.38	5.80	6.23
390.0	3.49	3.77	4.10	4.45	4.83	5.23	5.66	6.11	6.56

Horiz Tension 20 F (lbs)	Horiz Tension 30 F (lbs)	Horiz Tension 40 F (lbs)	Horiz Tension 50 F (lbs)	Horiz Tension 60 F (lbs)	Horiz Tension 70 F (lbs)	Horiz Tension 80 F (lbs)	Horiz Tension 90 F (lbs)	Horiz Tension 100 F (lbs)
1132	1046	963	888	818	755	697	647	602

Appendix K: Fiber Sag-Tension Charts

[Balance of Page Left Blank Intentionally]

Product Description: AT-XXX27DT-144-CLFB - Maximum Span 600 ft

Loading Conditions: NESC MEDIUM

Ice Thickness	6.4 mm	0.25 in.
Wind Pressure	192 N/m^2 (63.6 km/hr)	4 psf (39.5 MPH)
Temperature	-9.4 C	15 F
Safety Factor	2.92 N/m	0.2 lb/ft

Tension @ Maximum Span for 1.5 % Installation Sag

Short Term	823 kg	1815 lb
Long Term	504 kg	1111 lb

Specifications:

Maximum Span	182.9 m	600 ft
Cable Weight	0.331 kg/m	0.222 lb/ft
Cable Diameter	20.7 mm	0.813 in
Installation Temp	20 C	68 F
Cable Modulus	252.6 kg/mm^2	359.3 kpsi
Linear Expansion Coefficient	0.0000231 1 / C	0.00001284 1 / F
Estimated Break Load	1269 kg	2798 lb

Maximum Cable Length: Dependent on construction and/or fiber type

Singlemode	7,300 m	23,950 ft
62.5/125 Multimode	7,300 m	23,950 ft

	No Loading @ Install Temperature: 68 F			**All Loading Conditions @ Temperature: 15 F**				
Span	Sag	Install Sag	Tension	Vertical Sag	Tension	Vertical Sag	Horizontal Sag	Angle
ft	ft	%	lb	% of Span	lb	ft	ft	Deg
100	1.5	1.50	185	1.9	478	1.9	1.5	38
150	2.2	1.50	278	2.1	643	3.1	2.5	38
200	3.0	1.50	370	2.2	791	4.5	3.6	38
250	3.7	1.50	463	2.4	934	5.9	4.7	38
300	4.5	1.50	555	2.5	1070	7.5	5.9	38
350	5.2	1.50	648	2.6	1201	9.0	7.2	38
400	6.0	1.50	741	2.7	1329	10.7	8.5	38
450	6.7	1.50	833	2.7	1454	12.3	9.8	38
500	7.5	1.50	926	2.8	1576	14.1	11.1	38
550	8.2	1.50	1018	2.9	1697	15.8	12.5	38
600	9.0	1.50	1111	2.9	1815	17.6	13.9	38

The recommended maximum space potential at ADSS attachment point is 12 kV

Dead End Assembly:
Tyco: AS01-FDES-2095, Max. Tension: 2,400 lbs. (1,088 kg)
PLP: 2872012C1E1, Max. Tension: 2,500 lbs. (1135 kg)

Fixed Tangent Support (Line Angle Changes <= 20 deg & Spans <= 600 ft):
Tyco: FOSC 6080-PB
PLP: Dielectric block: 44009878
PLP: Aluminum Support: 4450105

Suspended Support (Line Angle Changes <= 20 deg & Spans <= 183 m):
Tyco Aluminum Suspension: AS01-FOS 5080-S
PLP: Aluminum Suspension: 4450205-S

Low Tension / Short Span Hardware:
PLP: Lite Tension DE: 2875008TE, Max. Tension: 800 lbs. (362 kg)
PLP: Lite Support: 4800124, Max.Span 300 ft (91 m)
PLP PGTTH Dead End: Not Available

Slack Storage Devices: Not recommended for TR cables
Tyco Dielectric Opti Loop: DFOS18-AD-100
PLP Fiberlign® CLAS Storage System w/cable guide: 710012375U

Heliformed Suspension Units (Line angle changes<= 30 degrees):
Tyco: AS01-FOHSU 2985 :Dual, Spans up to 2,000 ft (610 m)
PLP: 43003058YC :Spans 1200ft to 2000ft (365m to 610m)
PLP: 4470206-S Aluminum Suspension with SRR rods, Max Span: 1200 ft (365m)

Vibration Dampers, see Application Note 812 for recommendations:
Tyco: PSVD 1930-BE
PLP: 50503057

Down Lead Cushion & Abrasion Protector:
Tyco: FODLC 1910, Add prefix "T" and suffix "X" for Tower Attachment
PLP: 8003052, Add "H1" - Wood Attachment Kit & "LTC1" - Lattice Clamp Kit
Tyco: F0AP-10-6 Length: 6 ft
PLP: PTG-0203 Length: 6 ft

Corona coils not required
Tyco: Not Available
PLP: Sized to fit appropriate hardware, part numbers available upon request

Exclusive Use of OFS and Customer Defined Above

Product Description: AT-XXX27D6-024-CLCB - Maximum Span 600 ft

Loading Conditions: NESC MEDIUM

Ice Thickness	6.4 mm	0.25 in.
Wind Pressure	192 N/m^2 (63.6 km/hr)	4 psf (39.5 MPH)
Temperature	-9.4 C	15 F
Safety Factor	2.92 N/m	0.2 lb/ft

Tension @ Maximum Span for 1.5 % Installation Sag

Short Term	481 kg	1061 lb
Long Term	195 kg	429 lb

Specifications:

Maximum Span	182.9 m	600 ft
Cable Weight	0.128 kg/m	0.086 lb/ft
Cable Diameter	13.2 mm	0.518 in
Installation Temp	20 C	68 F
Cable Modulus	363.9 kg/mm^2	517.7 kpsi
Linear Expansion Coefficient	0.00001562 1 / C	0.00000868 1 / F
Estimated Break Load	743 kg	1639 lb

Maximum Cable Length: Dependent on construction and/or fiber type

Singlemode	12,900 m	42,323 ft
62.5/125 Multimode	8,000 m	26,247 ft

No Loading @ Install Temperature: 68 F | **All Loading Conditions @ Temperature: 15 F**

Span	Sag	Install Sag	Tension	Vertical Sag	Tension	Vertical Sag	Horizontal Sag	Angle
ft	ft	%	lb	% of Span	lb	ft	ft	Deg
100	1.5	1.50	72	2.0	293	2.0	2.1	46
150	2.2	1.50	107	2.2	392	3.3	3.5	46
200	3.0	1.50	143	2.4	480	4.8	5.0	46
250	3.7	1.50	179	2.6	564	6.4	6.7	46
300	4.5	1.50	215	2.7	642	8.1	8.5	46
350	5.2	1.50	250	2.8	718	9.9	10.3	46
400	6.0	1.50	286	2.9	790	11.7	12.2	46
450	6.7	1.50	322	3.0	861	13.6	14.2	46
500	7.5	1.50	358	3.1	929	15.6	16.3	46
550	8.2	1.50	393	3.2	996	17.6	18.4	46
600	9.0	1.50	429	3.3	1061	19.6	20.5	46

The recommended maximum space potential at ADSS attachment point is 12 kV

Dead End Assembly:
Tyco: AS01-FDES-1335, Max. Tension: 2,400 lbs. (1,088 kg)
PLP: 2872005C1E1, Max. Tension: 2,500 lbs. (1135 kg)

Fixed Tangent Support (Line Angle Changes <= 20 deg & Spans <= 600 ft):
Tyco: FOSC 6050-PB
PLP: Dielectric block: 44009952
PLP: Aluminum Support: 4450100

Suspended Support (Line Angle Changes <= 20 deg & Spans <= 183 m):
Tyco Aluminum Suspension: AS01-FOS 5050-S
PLP: Aluminum Suspension: 4450200-S

Low Tension / Short Span Hardware:
PLP: Lite Tension DE: 2875004TE, Max. Tension: 800 lbs. (362 kg)
PLP: Lite Support: 4800114, Max.Span 300 ft (91 m)
PLP PGTTH Dead End: Not Available

Slack Storage Devices: Not recommended for TR cables
Tyco Dielectric Opti Loop: DFOS18-AD-100
PLP Fiberlign® CLAS Storage System w/cable guide: 710012375U

Heliformed Suspension Units (Line angle changes<= 30 degrees):
Tyco: AS01-FOHSU 2150 :Dual, Spans up to 2,000 ft (610 m)
PLP: 43009922YC :Spans 1200ft to 2000ft (365m to 610m)
PLP: 4470201-S Aluminum Suspension with SRR rods, Max Span: 1200 ft (365m)

Vibration Dampers, see Application Note 812 for recommendations:
Tyco: PSVD 1173-BE
PLP: 50502274

Down Lead Cushion & Abrasion Protector:
Tyco: FODLC 1190, Add prefix "T" and suffix "X" for Tower Attachment
PLP: 8003042, Add "H1" - Wood Attachment Kit & "LTC1" - Lattice Clamp Kit
Tyco: F0AP-10-6 Length: 6 ft
PLP: PTG-0203 Length: 6 ft

Corona coils not required
Tyco: Not Available
PLP: Sized to fit appropriate hardware, part numbers available upon request

Product Description: AT-XXX27DT-096-CLCB - Maximum Span 600 ft

Loading Conditions: NESC MEDIUM

Ice Thickness	6.4 mm	0.25 in.
Wind Pressure	192 N/m^2 (63.6 km/hr)	4 psf (39.5 MPH)
Temperature	-9.4 C	15 F
Safety Factor	2.92 N/m	0.2 lb/ft

Tension @ Maximum Span for 1.5 % Installation Sag

Short Term	611 kg	1347 lb
Long Term	323 kg	712 lb

Specifications:

Maximum Span	182.9 m	600 ft
Cable Weight	0.212 kg/m	0.142 lb/ft
Cable Diameter	16.8 mm	0.662 in
Installation Temp	20 C	68 F
Cable Modulus	261.6 kg/mm^2	372.1 kpsi
Linear Expansion Coefficient	0.00002156 1 / C	0.00001198 1 / F
Estimated Break Load	870 kg	1919 lb

Maximum Cable Length: Dependent on construction and/or fiber type

Singlemode	9,700 m	31,824 ft
62.5/125 Multimode	8,000 m	26,247 ft

No Loading @ Install Temperature: 68 F | **All Loading Conditions @ Temperature: 15 F**

Span	Sag	Install Sag	Tension	Vertical Sag	Tension	Vertical Sag	Horizontal Sag	Angle
ft	ft	%	lb	% of Span	lb	ft	ft	Deg
100	1.5	1.50	119	2.0	364	2.0	1.8	42
150	2.2	1.50	178	2.2	488	3.3	3.0	42
200	3.0	1.50	237	2.4	599	4.8	4.4	42
250	3.7	1.50	297	2.5	704	6.4	5.8	42
300	4.5	1.50	356	2.7	804	8.0	7.3	42
350	5.2	1.50	416	2.8	901	9.7	8.9	42
400	6.0	1.50	475	2.9	994	11.5	10.5	42
450	6.7	1.50	534	3.0	1085	13.4	12.2	42
500	7.5	1.50	594	3.1	1174	15.3	13.9	42
550	8.2	1.50	653	3.1	1261	17.2	15.6	42
600	9.0	1.50	712	3.2	1347	19.2	17.4	42

The recommended maximum space potential at ADSS attachment point is 12 kV

Dead End Assembly:
Tyco: AS01-FDES-1715, Max. Tension: 2,400 lbs. (1,088 kg)
PLP: 2872009C1E1, Max. Tension: 2,500 lbs. (1135 kg)

Fixed Tangent Support (Line Angle Changes <= 20 deg & Spans <= 600 ft):
Tyco: FOSC 6065-PB
PLP: Dielectric block: 44009776
PLP: Aluminum Support: 4450103

Suspended Support (Line Angle Changes <= 20 deg & Spans <= 183 m):
Tyco Aluminum Suspension: AS01-FOS 5065-S
PLP: Aluminum Suspension: 4450203-S

Low Tension / Short Span Hardware:
PLP: Lite Tension DE: 2875006TE, Max. Tension: 800 lbs. (362 kg)
PLP: Lite Support: 4800118, Max.Span 300 ft (91 m)
PLP PGTTH Dead End: Not Available

Slack Storage Devices: Not recommended for TR cables
Tyco Dielectric Opti Loop: DFOS18-AD-100
PLP Fiberlign® CLAS Storage System w/cable guide: 710012375U

Heliformed Suspension Units (Line angle changes<= 30 degrees):
Tyco: AS01-FOHSU 2505 :Dual, Spans up to 2,000 ft (610 m)
PLP: 43009760YC :Spans 1200ft to 2000ft (365m to 610m)
PLP: 4470203-S Aluminum Suspension with SRR rods, Max Span: 1200 ft (365m)

Vibration Dampers, see Application Note 812 for recommendations:
Tyco: PSVD 1432-BE
PLP: 50509862

Down Lead Cushion & Abrasion Protector:
Tyco: FODLC 1670, Add prefix "T" and suffix "X" for Tower Attachment
PLP: 8003044, Add "H1" - Wood Attachment Kit & "LTC1" - Lattice Clamp Kit
Tyco: F0AP-10-6 Length: 6 ft
PLP: PTG-0203 Length: 6 ft

Corona coils not required
Tyco: Not Available
PLP: Sized to fit appropriate hardware, part numbers available upon request

Appendix L: Bollard Detail Drawing

[Balance of Page Left Blank Intentionally]

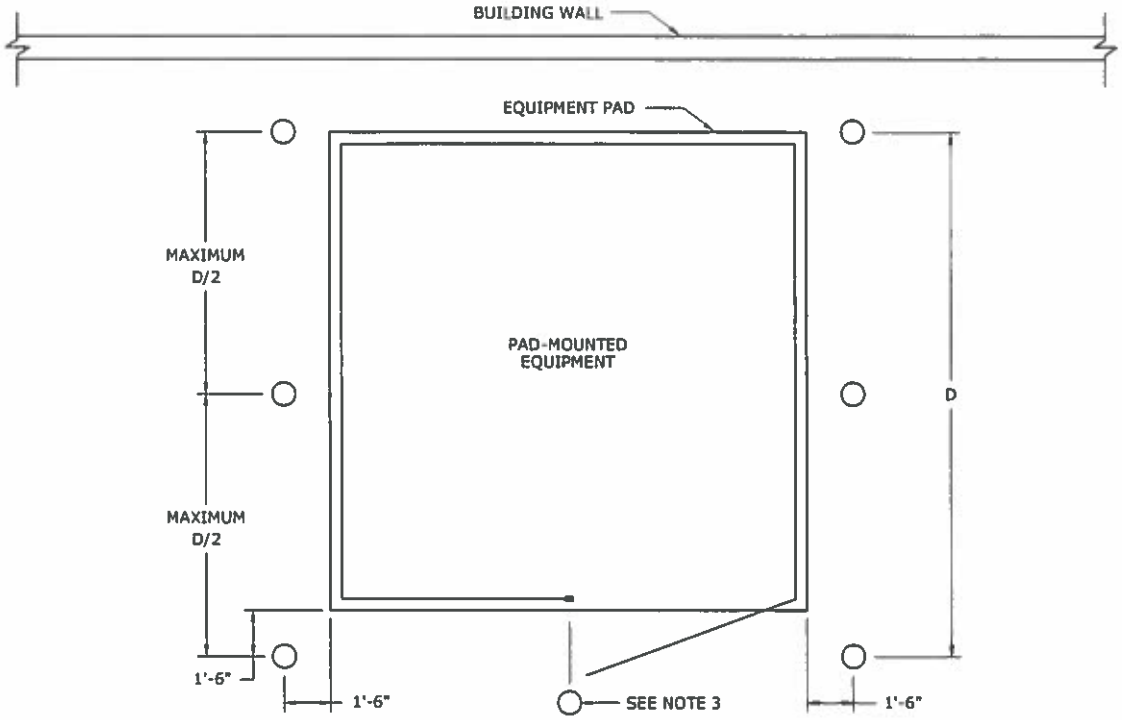

PLAN VIEW

NOTES:

1. PROTECTIVE POLES CAN BE INSTALLED ON ALL SIDES OF PAD-MOUNTED EQUIPMENT THAT ARE SUBJECT TO REGULAR VEHICLE TRAFFIC. THEIR USE IS AT THE DISCRETION OF LOCAL ENGINEERING AND WILL BE THE CUSTOMER'S RESPONSIBILITY TO PROVIDE AND INSTALL AFTER ALL REASONABLE EFFORTS TO LOCATE THE PAD-MOUNTED EQUIPMENT ELSEWHERE HAVE BEEN EXHAUSTED.
2. POLES SHOULD BE EVENLY SPACED ALONG THE SIDES OF THE PAD-MOUNTED EQUIPMENT, NO WIDER THAN HALF THE DIMENSION OF THE SIDE THEY ARE PROTECTING. EXCEPTIONS TO THIS ALONG SIDES WITH DOORS ARE ALLOWED IN ORDER TO ACCOMMODATE NOTE 3.
3. ON ANY SIDE OF PAD-MOUNTED EQUIPMENT WITH DOORS, THIS POLE SHOULD BE CENTRALLY LOCATED BETWEEN THE DOORS AND MUST ACCOMMODATE THE DOOR SWING OF THE EQUIPMENT. IT SHALL BE EITHER REMOVABLE BY HAND OR COLLAPSIBLE. REMOVABLE OR COLLAPSIBLE DESIGNS OTHER THAN WHAT ARE SHOWN MUST BE APPROVED BY LOCAL ENGINEERING.
4. POLES LOCATED ON ANY SIDE OF PAD-MOUNTED EQUIPMENT SHALL NOT INTERFERE WITH THE SAFE OPERATION AND EXPECTED MAINTENANCE OR REPLACEMENT OF THAT EQUIPMENT.
5. POLES SHALL BE PAINTED YELLOW OR OUTFITTED WITH A YELLOW BOLLARD COVER OR POST SLEEVE.
6. ALL POLES SHALL HAVE A 2" REFLECTIVE TAPE APPLIED EITHER AROUND THE TOP OF THE BOLLARD OR EXTENDING VERTICALLY DOWN THE LENGTH OF THE BOLLARD FOR 24". VERTICAL APPLICATIONS MUST BE ON THE SIDE FACING ANY ANTICIPATED TRAFFIC.

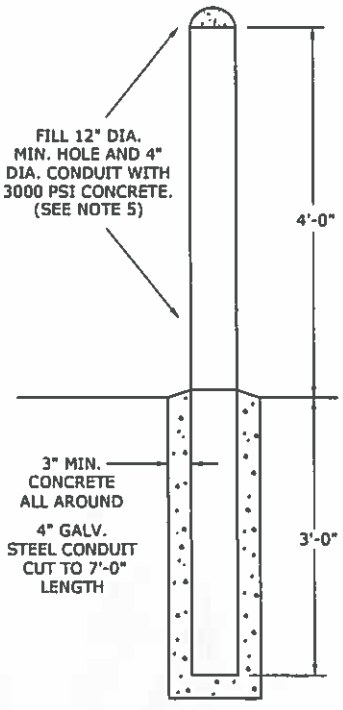

STANDARD POLE

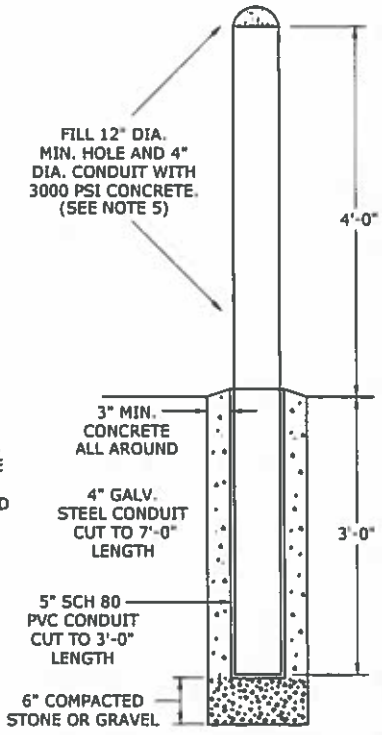

REMOVABLE POLE

PROTECTIVE POLES FOR PAD-MOUNTED EQUIPMENT