PUMP STATION UPGRADE AND REPLACEMENT

TO SERVE

FORT BEND COUNTY LEVEE IMPROVEMENT DISTRICT NO. 14

CITY OF SUGAR LAND
FORT BEND COUNTY, TEXAS

DATE : JUNE 2024
JOB NO. 1301-1413

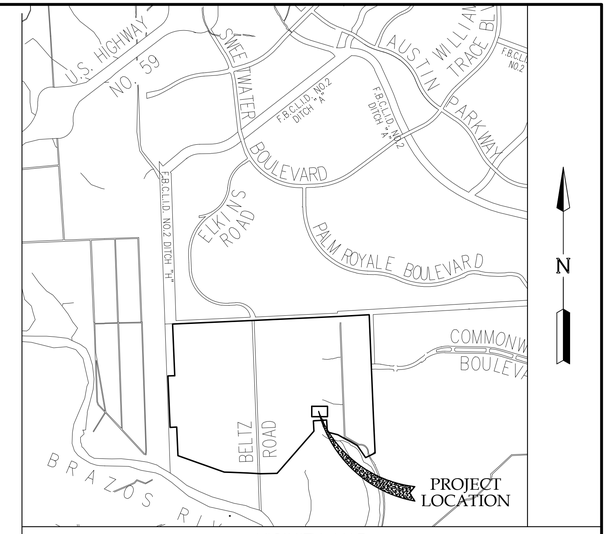

VICINITY MAP
FT BEND COUNTY KEY MAP – 608P 77479

SHEET LIST TABLE	
SHEET #	SHEET TITLE
CIVIL DRAWINGS	
C1	COVER SHEET
C2	GENERAL NOTES
C3	GENERAL NOTES II
C4	EXISTING SITE PLAN
C5	DEMOLITION SITE PLAN
C6	PROPOSED SITE PLAN
C7	STORM WATER POLLUTION PREVENTION PLAN
C8	PLAN VIEW
C9	SECTION VIEW
C10	FENCING PLAN
C11	FENCING DETAILS
C12	CIVIL DETAILS 1 OF 5
C13	CIVIL DETAILS 2 OF 5
C14	CIVIL DETAILS 3 OF 5
C15	CIVIL DETAILS 4 OF 5
C16	CIVIL DETAILS 5 OF 5
C17	EROSION CONTROL 1 OF 3
C18	EROSION CONTROL 2 OF 3
C19	EROSION CONTROL 3 OF 3
C20	PTO DRIVEN PUMP DETAILS
STRUCTURAL DRAWINGS	
S1	STRUCTURAL GENERAL NOTES
S2	EXISTING OUTFALL STRUCTURE & DEMOLITION
S3	PROPOSED OUTFALL MODIFICATIONS SHEET 1 OF 4
S4	PROPOSED OUTFALL MODIFICATIONS SHEET 2 OF 4
S5	PROPOSED OUTFALL MODIFICATIONS SHEET 3 OF 4
S6	PROPOSED OUTFALL MODIFICATIONS SHEET 4 OF 4
S7	STAIRCASE DETAILS SHEET 1 OF 2
S8	STAIRCASE DETAILS SHEET 2 OF 2
S9	MISCELLANEOUS CONCRETE DETAILS 1
S10	MISCELLANEOUS CONCRETE DETAILS 2
S11	RAILING DETAILS AND MISCELLANEOUS METALS
ELECTRICAL DETAILS	
E1	NOTES AND LEGEND
E2	ONE LINE DIAGRAM
E3	CONTROL DIAGRAMS SHEET 1 OF 3
E4	CONTROL DIAGRAMS SHEET 2 OF 3
E5	CONTROL DIAGRAMS SHEET 3 OF 3
E6	SITE AND FLOOR PLANS
E7	DEMOLITION PLAN

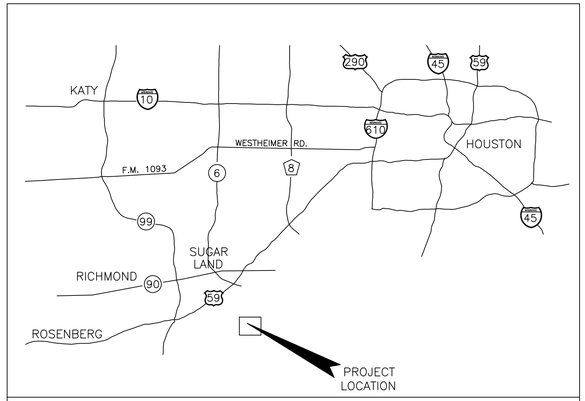

LOCATION MAP

ONE-CALL NOTIFICATION
SYSTEM
CALL BEFORE YOU DIG!!!
(713)223-4567 (IN HOUSTON)
(NEW STATEWIDE NUMBER OUTSIDE HOUSTON)
1-800-545-6005



DEVELOPER:
FORT BEND COUNTY LEVEE IMPROVEMENT DISTRICT NO.14

APPROVED FOR CONSTRUCTION

BY _____ DATE _____

BID SET

ENGINEER:
LJA Engineering, Inc.
2929 Briarpark Drive
Suite 600
Houston, Texas 77042
Phone 713.953.5200
Fax 713.953.5026
FRN-F-1386

PUMP STATION UPGRADE AND REPLACEMENT – JOB NO. 1301-1413

Date\Time : Wed, 28 Aug 2024 – 3:14pm User Name : jminter
Path\Name : I:\Projdata\1_1301_1413\ACAD_Sheet_Files\01_PSU_COVER.dwg

PLOT TIME:

GENERAL NOTES:

1. CONTACT THE ENGINEERING INSPECTORS WITH THE CITY'S ENGINEERING DEPARTMENT AT (281) 275-2780 PRIOR TO STARTING WORK TO SCHEDULE A PRE-CONSTRUCTION MEETING.
2. CONTRACTOR IS RESPONSIBLE FOR HAVING ALL BURIED UTILITIES IDENTIFIED, PROTECTED, REPLACED AND/OR PROPERLY REPAIRED IF DAMAGED. REPAIRS/REPLACEMENT SHALL BE AT CONTRACTOR'S EXPENSE.
3. CONTRACTOR SHALL OBTAIN AND MAINTAIN ON SITE ALL APPLICABLE PERMITS AND AN APPROVED COPY OF THE PLANS AND SPECIFICATIONS. NOTIFY THE CITY'S ENGINEERING DEPARTMENT 48 HOURS PRIOR TO COMMENCEMENT OF WORK.
4. CONTRACTOR IS RESPONSIBLE FOR NOTIFYING THE CITY'S ENGINEERING DEPARTMENT 24 HOURS PRIOR TO WEEKDAY WORK REQUIRING INSPECTION INCLUDING, BUT NOT LIMITED TO, LIMING, PAVING OPERATIONS, CONCRETE PLACEMENT, FORMING AND SET-UP, DENSITIES, PIPE INSTALLATION, AND ANY TESTING BY LABORATORIES. THE ENGINEERING DEPARTMENT MAY BE REACHED AT 281-275-2780 OR BY CONTACTING THE ASSIGNED INSPECTOR.
5. ALL SATURDAY WORK SHALL BE REQUESTED, IN WRITING, WITH THE CITY'S ENGINEERING DEPARTMENT AT LEAST 48-HOURS IN ADVANCE. SUNDAY AND HOLIDAY WORK REQUIRES 72 HR. WRITTEN REQUESTS AND MUST BE APPROVED BY THE CITY ENGINEER. FAXES MAY BE SENT TO (281) 275-2771. REQUIRED INSPECTIONS MAY BE SUBJECT TO INSPECTION FEES. NON-NOTIFICATIONS MAY RESULT IN NON-COMPLIANCE, WORK ORDERED STOPPAGE AND DOUBLE INSPECTION FEES.
6. FULL-TIME RESIDENT INSPECTION BY THE PROJECT ENGINEER'S REPRESENTATIVE SHALL BE PROVIDED AT ALL CRITICAL POINTS OF CONSTRUCTION OR AS DEEMED NECESSARY BY THE CITY OF SUGAR LAND.
7. FOLLOW-UP INSPECTIONS OF ALL PUBLIC INFRASTRUCTURE SHALL BE SCHEDULED WITHIN 60 DAYS OF THE INITIAL INSPECTION, a COMPLETE RE-INSPECTION AND A NEW PUNCH LIST MAY BE REQUIRED AFTER THE 60 DAY PERIOD.
8. DESIGN AND CONSTRUCTION SHALL CONFORM TO THE TEXAS COMMISSION OF ENVIRONMENTAL QUALITY RULES AND REGULATIONS FOR PUBLIC WATER SYSTEMS, THE CITY OF SUGAR LAND DESIGN MANUAL (ISSUED 2007), AND THE CITY OF SUGAR LAND STANDARD DETAIL SHEETS. THE CITY OF SUGAR LAND DESIGN STANDARDS SHALL BE ACQUIRED (AND USED) FROM THE ENGINEERING DEPARTMENT, THE LATEST REVISIONS AND/OR AMENDMENTS SHALL BE OBSERVED. WHERE CONFLICT MAY ARISE BETWEEN INFORMATION ON APPROVED CONSTRUCTION DRAWINGS AND/OR PROJECT SPECIFICATIONS AND CITY OF SUGAR LAND STANDARDS, THEN THE CITY DESIGN STANDARDS SHALL GOVERN
9. ALL STATIONS ARE CENTERLINE OF STREET RIGHT-OF-WAY UNLESS OTHERWISE NOTED ON THE PLANS EXCEPT IN SIDE OR BACK LOT EASEMENTS WHERE CENTERLINE IS CENTER OF PIPE. IN EASEMENTS WHERE SANITARY AND STORM SEWER ARE PRESENT PARALLEL, STATIONS SHALL BE BASED ON CENTERLINE OF STORM SEWER PIPING.
10. ADEQUATE DRAINAGE SHALL BE MAINTAINED AT ALL TIMES DURING CONSTRUCTION. ANY DRAINAGE AREA OR STRUCTURE DISTURBED, DURING CONSTRUCTION, SHALL BE RESTORED TO THE SATISFACTION OF THE CITY OF SUGAR LAND. ALL CONSTRUCTION STORM RUNOFF SHALL COMPLY WITH THE REQUIREMENTS OF THE CITY OF SUGAR LAND DESIGN STANDARDS. IF NON-COMPLIANCE OCCURS, CONTRACTOR SHALL REMEDY IMMEDIATELY AT HIS OWN EXPENSE.
11. ANY POLLUTION CONTROL DEVICE, SOD, OR SEEDED AREA DAMAGED, DISTURBED, OR REMOVED SHALL BE REPLACED OR REPAIRED AT THE CONTRACTOR'S EXPENSE. THE CONTRACTOR IS RESPONSIBLE FOR WATERING ANY SEED OR SOD WHICH HE HAS INSTALLED UNTIL ADEQUATE GROWTH IS ACHIEVED TO PREVENT EROSION.
12. STORM WATER POLLUTION PROTECTION SHALL BE DESIGNED, CONSTRUCTED, MAINTAINED AND SHALL BE IN TOTAL COMPLIANCE WITH THE STORM WATER QUALITY MANUAL OF THE CITY OF SUGAR LAND.
13. ANY MATERIALS OR WORKMANSHIP NOT MEETING OR EXCEEDING CITY OF SUGAR LAND STANDARDS IS THE SOLE RESPONSIBILITY OF THE CONTRACTOR AND WILL BE REPAIRED OR REPLACED AT THE CONTRACTOR'S EXPENSE.
14. THE CONTRACTOR SHALL KEEP THE STREETS, RIGHT-OF-WAY, AND WORK AREA CLEAN OF DIRT, MUD, AND DEBRIS AS NEEDED OR AS REQUIRED BY CITY STAFF.
15. THE CONTRACTOR SHALL PROVIDE AND MAINTAIN ALL REQUIRED TRAFFIC SAFETY CONTROL DEVICES UP TO AND INCLUDING FLAGMEN OR POLICE OFFICERS, IF DEEMED NECESSARY BY THE CITY OF SUGAR LAND.
16. THE CONTRACTOR SHALL CONTACT THE CITY OR LOCAL MUD AS APPROPRIATE TO OPERATE EXISTING UTILITIES AND PRIOR TO MAKING TIE-INS.
17. ALL BACKFILL WITHIN PUBLIC RIGHTS-OF-WAY OR EASEMENTS SHALL BE COMPACTED TO 95% STANDARD PROCTOR DENSITY (IN 8 INCH LIFTS) AND TESTED FOR ±2% OPTIMUM MOISTURE BY AN APPROVED LAB.
18. IT IS PERMISSIBLE TO USE A BACKHOE FOR TRENCH EXCAVATION IN LIEU OF A TRENCHING MACHINE.
19. THE CONTRACTOR SHALL NEVER UNLOAD ANY TRACK-TYPE VEHICLE OR EQUIPMENT ON ANY EXISTING PAVEMENT OR CROSS OVER ANY EXISTING PAVEMENT OR CURB.
20. ALL FINISH GRADES ARE TO CONFORM TO A MINIMUM SLOPE OF 6" PER 100 FT. POSITIVE DRAINAGE IS DEPICTED BY ARROWS.
21. CONTRACTOR SHALL UNCOVER EXISTING UTILITIES AT ALL "POINTS OF CROSSING" TO DETERMINE IF CONFLICTS EXIST BEFORE COMMENCING ANY CONSTRUCTION. NOTIFY THE ENGINEER AT ONCE OF ANY CONFLICT.
22. ALL FINISHED GRADES SHALL VARY UNIFORMLY BETWEEN FINISHED ELEVATIONS.
23. ALL TESTING PROCEDURES SHALL CONFORM TO THE CITY OF SUGAR LAND STANDARDS. THE INITIAL TESTING EXPENSE SHALL BE BORNE BY THE OWNER. IF ANY OF THE TESTS DO NOT MEET THE TESTING STANDARDS, IT SHALL BE THE CONTRACTOR'S RESPONSIBILITY TO REMOVE OR REPLACE SUCH MATERIAL SO THE TESTING STANDARDS CAN BE MET. ADDITIONAL TESTING TO MEET COMPLIANCE SHALL BE AT THE CONTRACTOR'S EXPENSE.
24. CONTRACTOR SHALL PROVIDE SHEETING, SHORING, AND BRACING AS NECESSARY TO PROTECT WORKMEN AND EXISTING UTILITIES DURING ALL PHASES OF CONSTRUCTION AS PER O.S.H.A. REQUIREMENTS.
25. ALL MATERIALS AND WORKMANSHIP NOT GOVERNED BY CITY STANDARDS SHALL CONFORM TO THE LATEST VERSION OF THE TXDOT STANDARD SPECIFICATIONS AND THE TEXAS MANUAL ON UNIFORM TRAFFIC CONTROL DEVICES, AND ANY REVISIONS THERETO.
26. THE CONTRACTOR SHALL BE RESPONSIBLE FOR SAFEGUARDING AND PROTECTING ALL MATERIALS AND EQUIPMENT STORED ON THE JOBSITE IN A SAFE AND WORKMAN-LIKE MANNER (DURING AND AFTER WORKING HOURS), UNTIL JOB COMPLETION.
27. THE LOADING AND UNLOADING OF ALL PIPE, VALVES, HYDRANTS, MANHOLES, AND OTHER ACCESSORIES SHALL BE IN ACCORDANCE WITH THE MANUFACTURER'S RECOMMENDED PRACTICES AND SHALL BE PERFORMED WITH CARE TO AVOID ANY DAMAGE TO THE MATERIAL. THE CONTRACTOR SHALL LOCATE AND PROVIDE THE NECESSARY STORAGE AREAS FOR MATERIAL AND EQUIPMENT.
28. THE CONTRACTOR SHALL FURNISH ALL MATERIALS, EQUIPMENT, AND LABOR FOR EXCAVATION, INSTALLATION, AND COMPLETION OF THE PROJECT AS SHOWN ON THE PLANS AND SPECIAL PROVISIONS TO COMPLY WITH CITY OF SUGAR LAND STANDARDS.
29. NO PRIVATE UTILITIES (I.E., PHONE, CABLE T.V., ELECTRICITY, ETC.) SHALL BE INSTALLED WITHIN 4 FEET BACK OF CURB.
30. PLANS DO NOT EXTEND TO OR INCLUDE DESIGNS OR SYSTEMS PERTAINING TO THE SAFETY OF THE CONTRACTOR OR ITS EMPLOYEES, AGENTS, OR REPRESENTATIVES IN THE PERFORMANCE OF THE WORK. THE SEAL OF THE REGISTERED PROFESSIONAL ENGINEER(S) HEREON DOES NOT EXTEND TO ANY SUCH SYSTEMS THAT MAY NOW OR HEREAFTER BE INCORPORATED IN THE PLANS. THE CONTRACTOR SHALL PREPARE OR OBTAIN THE APPROPRIATE SAFETY SYSTEMS, INCLUDING CURRENT OSHA STANDARDS FOR TRENCH SAFETY SYSTEMS, SEALED BY A LICENSED PROFESSIONAL ENGINEER. APPROPRIATE TRENCH SAFETY PLANS SHALL BE SUBMITTED BY THE CONTRACTOR PRIOR TO EXECUTION OF A CONTRACT FOR HIS WORK.
31. FOR TRAFFIC SIGNAL CONSTRUCTION, CONTACT THE CITY OF SUGAR LAND INFORMATION TECHNOLOGY DEPARTMENT TO OBTAIN IP ADDRESSES FOR SIGNAL CABINET EQUIPMENT. ALLOW 5 WORKING DAYS FOR THE ADDRESS. ONCE EQUIPMENT HAS BEEN INSTALLED AND COMMUNICATIONS ESTABLISHED WITH THE TRAFFIC MANAGEMENT CENTER, IT WILL COMMISSION THE COMMUNICATION LINK. ALLOW 10 WORKING DAYS FOR COMMISSIONS.

CONCRETE/PAVING NOTES:

1. CONTRACTOR IS RESPONSIBLE FOR OBTAINING ALL PERMITS AND AUTHORIZATION REQUIRED BY CITY OF SUGAR LAND.
2. CONTRACTOR SHALL HAVE ALL UTILITIES LOCATED PRIOR TO CONSTRUCTION AND WILL REPAIR OR REPLACE ANY DAMAGE AT CONTRACTOR'S EXPENSE.
3. PAVING CONTRACTOR SHALL PROTECT WATER, SEWER, AND DRAINAGE FACILITIES AND WILL REPLACE ANY DAMAGED FACILITIES AT HIS OWN EXPENSE. ALL MANHOLES AND VALVES WITHIN THE PAVEMENT AREA SHALL BE ADJUSTED TO FINISH GRADE BY THE PAVING CONTRACTOR WITH THE USE OF APPROVED BLOCKOUTS.
4. WHEN THE TOP OF CURB OR BOTTOM OF SIDEWALK SLAB ELEVATION VARIES FROM THE NATURAL GROUND, THE PAVING CONTRACTOR SHALL BACKFILL IN LAYERS NOT EXCEEDING 8-INCHES IN DEPTH. EACH LAYER WILL BE COMPACTED TO A MINIMUM OF 95% STANDARD PROCTOR DENSITY. THE DISTURBED AREA SHALL BE SEEDED, SODDED, FERTILIZED, AND/OR SILT BARRIER FENCED WITHIN 10 WORKING DAYS. THE TYPE OF POLLUTION CONTROL WILL BE DETERMINED BY THE APPROVED PLANS AND/OR THE CITY OF SUGAR LAND CITY ENGINEER.
5. ALL PAVING SHALL BE IN ACCORDANCE WITH THE CITY OF SUGAR LAND DESIGN STANDARDS, APPROVED PLANS AND SPECIFICATIONS WITH THE LATEST REVISIONS OR AMENDMENTS. IN THE EVENT OF A CONFLICT, THE CITY OF SUGAR LAND DESIGN STANDARDS GOVERNS.
6. PAVING CONTRACTOR SHALL PROVIDE AND MAINTAIN SILT PROTECTION FENCES ON ALL STAGE I CURB INLETS. THE PAVING CONTRACTOR SHALL MAINTAIN ANY OTHER POLLUTION CONTROLS ESTABLISHED, I.E., ADDITIONAL SILT BARRIERS, SAND BAGS, ETC., FOR THE DURATION OF THE PROJECT. ANY DAMAGED OR MISSING DEVICES SHALL BE REPAIRED OR REPLACED AT THE CONTRACTOR'S EXPENSE.
7. EXISTING PAVEMENTS, CURBS, SIDEWALKS, DRIVEWAYS, ETC., DAMAGED OR REMOVED DURING CONSTRUCTION SHALL BE REPLACED TO THE CITY OF SUGAR LAND STANDARDS AT THE CONTRACTOR'S EXPENSE.
8. CONDITION OF THE WORK AREA (INCLUDING ROADS, RIGHT-OF-WAYS, ETC.) UPON COMPLETION OF THE JOB SHALL BE AS GOOD OR BETTER THAN THE CONDITION PRIOR TO STARTING THE WORK.
9. ALL DRIVEWAYS WILL BE LOCATED TO AVOID EXISTING CURB INLET STRUCTURES.
10. REDWOOD AND KEYWAYS SHALL NOT INTERSECT WITHIN 2 FEET OF AN INLET.
11. AT INITIAL AND FINAL INSPECTIONS THE PAVEMENT WILL BE FLOODED TO CHECK FOR BIRDBATHS AND CRACKS. FLOODING OF STREETS SHALL OCCUR 1 HOUR PRIOR TO INSPECTION.
12. ALL CONCRETE PLACED SHALL BE UNIFORMLY SPRAYED WITH A MEMBRANE CURING COMPOUND AS DESCRIBED IN ITEM 526 IN THE TXDOT STANDARD SPECIFICATIONS FOR CONSTRUCTION. IMPROPER APPLICATION WILL RESULT IN THE REJECTION OF THE CONCRETE.
13. SIX (6) INCH, 5.5 SK, 3500 PSI @ 28 DAYS, REINFORCED WITH #4 REBAR, 24" C.C. EACH WAY IS THE MINIMUM ACCEPTABLE CONSTRUCTION FOR LOCAL STREETS
14. SEVEN (7) INCH, 5.5 SK, 3500 PSI @ 28 DAYS, REINFORCED WITH #4 REBAR, 18" C.C. EACH WAY IS THE MINIMUM ACCEPTABLE PAVEMENT FOR COLLECTOR STREETS.
15. EIGHT (8) INCH, 5.5 SK, 3500 PSI @ 28 DAYS, REINFORCED WITH #4 18" C.C. EACH WAY IS THE MINIMUM ACCEPTABLE FOR ARTERIAL STREETS.
16. WHEN CONCRETE PAVEMENT INTERSECTS THICKER PAVEMENT, THE THICKER PAVEMENT SHALL BE CONSTRUCTED TO THE ENDS OF ALL RADII.
17. ALL RETURNS SHALL HAVE A MIN. 25 FT. RADIUS AT THE FACE OF CURB UNLESS OTHERWISE NOTED.
18. ALL INTERSECTIONS SHALL BE CONSTRUCTED WITH WHEELCHAIR RAMPS IN ACCORDANCE WITH THE TEXAS ACCESSIBILITY STANDARD, THE AMERICAN DISABILITIES ACT, AND THE CITY OF SUGAR LAND STANDARDS (LATEST REVISIONS). (NO BLOCKOUTS)
19. CONCRETE SIDEWALKS SHALL BE CONSTRUCTED WITHIN EACH STREET RIGHT-OF-WAY IN ACCORDANCE WITH CITY OF SUGAR LAND, THE A.D.A., AND THE T.A.S. STANDARDS (LATEST REVISIONS).
20. CRACKS LARGER THAN 1/16-INCH ARE NOT ACCEPTABLE IN NEW PAVEMENT. CRACKS 1/16-INCH OR LESS SHALL BE ADDRESSED ON AN INDIVIDUAL BASIS BY DRILL AND EPOXY INJECTION, SUBJECT TO APPROVAL OR REJECTION.
21. PROPER TESTING AND LAB DOCUMENTATION IS REQUIRED. FAILURE TO MEET THE MINIMUM PAVEMENT REQUIREMENTS WILL RESULT IN THE REJECTION OF SAID PAVEMENT. IMMEDIATE REMOVAL AND REPLACEMENT OF SUBSTANDARD PAVEMENT SECTIONS WILL BE NECESSARY TO SATISFY THESE REQUIREMENTS.
22. 4-CONCRETE CYLINDERS, SLUMP, AND AIR ENTRAINMENT TESTS ARE REQUIRED FOR EACH 100 CUBIC YARDS OF CONCRETE PAVING WITH A MINIMUM OF ONE SET OF 4 PER PLACEMENT. THE CITY OF SUGAR LAND RESERVES THE RIGHT TO REQUIRE ADDITIONAL TESTS AT THE CONTRACTOR'S EXPENSE. IF ANY MATERIAL APPEARS BELOW STANDARDS.
23. NO. 3 REBAR, 18-INCH C.C. E.W. IS THE MINIMUM ACCEPTABLE FOR SIDEWALKS. NUMBER 4-REBAR, 24-INCH C-C. EACH WAY IS THE MINIMUM ACCEPTABLE FOR COMMERCIAL APPROACHES, HANDICAP RAMPS, RESIDENTIAL APPROACHES AND DRIVEWAYS.
24. COLD WEATHER PRECAUTIONS. CONCRETE PAVEMENT SHALL NOT BE PLACED WHEN THE AMBIENT TEMPERATURE IS 40°F AND FALLING. CONCRETE MAY BE PLACED IF THE AMBIENT TEMPERATURE IS 35° AND RISING. CONTRACTOR SHALL PROVIDE AN APPROVED COVERING MATERIAL (COTTON MATS, POLYETHYLENE SHEETING, ETC.) IN THE EVENT TEMPERATURE SHOULD FALL BELOW 32°F. NO SALT OR OTHER CHEMICALS SHALL BE ADDED TO CONCRETE TO PREVENT FREEZING.
25. HOT WEATHER. NO CONCRETE PAVEMENT MIXTURE SHALL BE PLACED IF THE MIXTURE TEMPERATURE IS ABOVE 95°F. AIR AND WATER REDUCER ARE REQUIRED IF MIXTURE TEMPERATURE REACHES 85°F OR ABOVE.
26. IF NO AIR AND WATER REDUCER HAS BEEN ADDED, NO CONCRETE SHALL BE PLACED IF MORE THAN 60 MINUTES PAST BATCH TIME. IF AIR AND WATER REDUCER HAS BEEN ADDED, NO CONCRETE SHALL BE PLACED IF MORE THAN 90 MINUTES PAST BATCH TIME.
27. STRUCTURE TEMPERATURES AND TIMING FOR CONCRETE PLACEMENT MAY VARY. REFER TO TXDOT STANDARDS ITEM 420 FOR DETAILS.
28. TRANSVERSE EXPANSION JOINTS SHALL BE PLACED AT ALL POINTS OF CURVATURE, POINTS OF TANGENCY AND ALL INTERSECTION CURB RETURN POINTS. MAXIMUM SPACING SHALL BE 200' AND BE SEALED WITH SEALANT CONFORMING TO TXDOT ITEM 360 (& ITEM 438) AND TXDOT DMS-6310, CLASS-2.
29. CONTROL JOINTS SHALL BE PLACED AT 20' C-C.
30. EXPANSION JOINT LAYOUT FOR INTERSECTIONS SHALL BE PROVIDED BY ENGINEER FOR CITY APPROVAL.
31. NO WIRE MESH IS ALLOWED IN ANY CONCRETE WITHIN THE CITY LIMITS OR ETJ.
32. ALL REBAR SHALL BE 100% TIED. OVERLAPS SHALL BE DOUBLE TIED MINIMUM. REINFORCED STEEL BE A MINIMUM 60% COVERAGE.
33. ALL NEW CURB REQUIRES 3,000 P.S.I. @ 28-DAYS. 4 CONCRETE CYLINDERS, SLUMP, AND AIR ENTRAINMENT TESTS ARE REQUIRED FOR EACH 50 CUBIC YARDS OF CONCRETE CURB WITH A MINIMUM OF ONE SET OF 4 PER PLACEMENT.
34. A CITY INSPECTOR MUST BE PRESENT ON ALL PROOF ROLLS, LIME DEPTH CHECKS AND DENSITY TESTS AND MUST BE CONTACTED AT LEAST 24 HOURS PRIOR TO THE TEST.
35. CONCRETE MIX DESIGN MUST BE SENT TO THE CITY FOR APPROVAL A MINIMUM 72 HOURS BEFORE THE FIRST CONCRETE POUR
36. FOR A REGULAR MIX, SLUMP SHALL BE A MAXIMUM OF 5". FOR A MIX WITH A WATER REDUCER, SLUMP SHALL BE A MAXIMUM OF 6".
37. VEHICLES OF ALL TYPES ARE PROHIBITED FROM DRIVING ON NEW PAVEMENTS SEVEN (7) DAYS AFTER THE CONCRETE POUR AND UNTIL THE CONCRETE HAS REACHED A MINIMUM OF 3,000 PSI. PAVEMENT PROTECTION SUCH AS A DIRT LAYER OF AT LEAST 12" IS REQUIRED FOR TRACK EQUIPMENT AT PAVEMENT CROSSINGS.
38. IN LIEU OF MECHANICALLY CONTROLLED VIBRATORS CONTROLLED BY A SLIP-FORM PAVING MACHINE, HAND MANIPULATED MECHANICAL VIBRATORS SHALL BE USED FOR PROPER CONSOLIDATION OF CONCRETE IN ALL PAVEMENT AREAS (ALONG FORMS, AT JOINTS, ETC.)
39. ALL CONCRETE STREETS AND BRIDGE SURFACES SHALL HAVE A "BAKER BROOM" FINISH, WHILE ALL OTHER CONCRETE PLACEMENT SHALL HAVE A MEDIUM BROOM FINISH.
40. ALL PAVEMENT MARKINGS TO BE DONE IN CONFORMANCE WITH THE LATEST VERSION OF TMUTCD AND TXDOT STANDARD SPECIFICATIONS AND ANY REVISIONS THERETO.
41. REFER TO GENERAL NOTES.

CEMENT STABILIZED SAND:

1. ALL STABILIZED SAND SHALL BE A MINIMUM OF 1.5 SK PER CUBIC YARD.
2. CEMENT STABILIZED SAND (C.S.S.) SHALL ACHIEVE A MINIMUM OF 100 PSI WITHIN 48 HOURS.
3. A MINIMUM OF 2 RANDOM SAMPLES SHALL BE TAKEN EACH WEEK. (FOR SMALLER PROJECTS, ONE SAMPLE MAY SUFFICE WITH CITY OF SUGAR LAND APPROVAL) THE CITY OF SUGAR LAND RESERVES THE RIGHT TO REQUIRE ADDITIONAL TESTS, AT THE CONTRACTORS EXPENSE IF IT IS DEEMED NECESSARY.
4. ANY C.S.S. NOT MEETING CITY OF SUGAR LAND STANDARDS SHALL BE REMOVED AND REPLACED AT THE CONTRACTOR'S EXPENSE.
5. BOTH CEMENT CONTENT AND COMPRESSIVE TESTS SHALL BE CONDUCTED ON C.S.S. SAMPLES.
6. ALL C.S.S. SHALL BE COMPACTED IN MAXIMUM OF 8-INCH LIFTS AND REQUIRED TO REACH A MINIMUM DENSITY OF 95%. 7. REFER TO GENERAL NOTES.

BANK SAND:

1. BANK SAND IS DEFINED AS A WELL-GRADED SAND, FREE OF SILT, CLAY, FRIABLE OR SOLUBLE MATERIALS AND ORGANIC MATER, MEETING THE UNIFIED SOILS CLASSIFICATIONS SYSTEM GROUP SYMBOL SW CRITERIA WITH A PLASTICITY INDEX OF LESS THAN 10. NO MORE THAN 12% OF MATERIAL CAN PASS THE No. 200 SIEVE.

ASPHALT - OILS AND EMULSIONS:

1. CONTRACTOR SHALL VERIFY LINES AND GRADES AND THAT COMPACTED BASE IS READY TO SUPPORT LOADS.
2. BASE MATERIAL SHALL BE DRY AND THOROUGHLY CLEAN OF LOOSE MATERIAL PRIOR TO APPLICATION.
3. OILS & EMULSION SHALL BE DISTRIBUTED EVENLY AND SMOOTHLY UNDER PRESSURE NECESSARY FOR PROPER DISTRIBUTION.
4. MAINTAIN REQUIRED SURFACE CONDITIONS UNTIL ACCEPTED BY THE CITY OF SUGAR LAND.
5. PRIME COAT SHALL BE M.C.-30, M.C.-70 OR E.P.R.1 PRIME AND SHALL COMPLY WITH TXDOT STANDARD SPECIFICATIONS FOR CONSTRUCTION OF HIGHWAYS, STREETS, AND BRIDGES (1993) AND ITS LATEST REVISIONS.
6. TACK COAT SHALL BE SS-1 AND SHALL COMPLY TO TXDOT, S.S.C.H.S. & B. (1993) AND ITS LATEST REVISIONS.
7. M.C.-30 AND M.C.-70 AND EPR-1 PRIME SHALL BE DISTRIBUTED AT A RATE OF .25 TO .35 GALLONS PER SQUARE YARD. AND MAY NOT BE APPLIED WHEN AMBIENT TEMPERATURE IS 50°F AND FALLING. (NOTICE: CUTBACK ASPHALTS MAY NOT BE USED DURING THE PERIOD OF APRIL 16 THROUGH SEPT. 15 AS PER ASTM D-244).
8. EPR-1 MAXIMUM WATER DILUTION IS 3 PART'S WATER TO ONE PART EPR-1.
9. SS-1 TACK COAT SHALL BE APPLIED AT A RATE NOT TO EXCEED 0.06 GAL. PER SQUARE YARD OF SURFACE AREA. CONTACT JOINTS, CURBS, ETC. SHALL BE PAINTED WITH AN EVEN THIN COAT APPLIED BY BRUSH OR BROOM. COATING MATERIAL SHALL BE HEATED TO 125°F TO 180°F WHEN APPLIED. TACK COAT MAY BE APPLIED WHEN AMBIENT TEMPERATURES ARE 40°F AND RISING. TACK COAT MAY NOT BE APPLIED IF AMBIENT AIR IS 50°F AND FALLING.

LIMING SUBGRADE:

1. LIME SHALL BE A "SLURRY" AS PER TXDOT 260 UNLESS SPECIFICALLY RECOMMENDED BY THE GEOTECHNICAL ENGINEER AND APPROVED BY THE CITY ENGINEER.
2. ALL LIME SLURRIES SHALL BE FURNISHED AT OR ABOVE THE MINIMUM "DRY SOLIDS" CONTENTS AS APPROVED BY THE ENGINEER.
3. SUBGRADES SHALL BE STABILIZED WITH A MINIMUM SIX PERCENT (6%) LIME BY WEIGHT, EIGHT INCHES (8") THICK THE INITIAL MIX TO REDUCE PLASTICITY INDEX (PI) TO 20 OR LESS AS DETERMINED BY THE LIME SERIES. THE FINAL MIX SHALL BE AT SIX INCHES (6") THICK.
4. LIME DRY SOLID CONTENT TESTS SHALL BE CONDUCTED ON SITE, ONCE PER ONE-HUNDRED (100) TONS OF MATERIAL DISTRIBUTED, UNLESS OTHERWISE NOTED.
5. THE SUBGRADE SHALL BE SHAPED AND GRADED TO CONFORM TO THE TYPICAL SECTIONS, AS SHOWN ON THE PLANS, PRIOR TO TREATING THE EXISTING MATERIAL.
6. UNLESS APPROVED BY THE CITY ENGINEER, LIME OPERATIONS SHALL NOT BE STARTED WHEN THE AMBIENT AIR TEMPERATURE IS BELOW 40°F. AND FALLING. LIMING MAY, WITH APPROVAL, BE STARTED WHEN THE AMBIENT AIR TEMPERATURE IS 35°F AND RISING. LIME SHALL NOT BE PLACED WHEN WEATHER CONDITIONS, ARE UNSUITABLE.
7. THE SUBGRADE MATERIAL AND SLURRY SHALL BE THOROUGHLY MIXED, BROUGHT TO THE PROPER MOISTURE CONTENT (±2) AND LEFT TO CURE USUALLY 3 DAYS (72 HRS.) MINIMUM AS APPROVED BY THE CITY ENGINEER.
8. AFTER CURING, THE SUBGRADE SHALL BE REMIXED UNTIL PULVERIZATION REQUIREMENTS ARE MET, AS PER TXDOT.
   TEX-101-E, PART III.
   PERCENT MINIMUM PASSING 1-3/4" SIEVE.....100
   PERCENT MINIMUM PASSING 3/4" SIEVE.....85
   PERCENT MINIMUM PASSING No.4 SIEVE.....60
9. SIEVE TESTS SHALL BE CONDUCTED EVERY 150 LF ON ALTERNATING LANES OF TRAFFIC OR EVERY 300 LF ON SINGLE LANES AS REQUIRED. AT LEAST ONE TEST SHALL BE CONDUCTED ON EACH ROADWAY OR CUL-DE-SAC.
10. THE MATERIAL SHALL BE AERATED OR MOISTENED TO + OR -2% OPTIMUM PRIOR TO COMPACTION. COMPACTION TO A MINIMUM 95% DENSITY SHALL BEGIN IMMEDIATELY AFTER ALL PULVERIZATION AND MOISTURE REQUIREMENTS ARE MET. THROUGHOUT THIS ENTIRE OPERATION, THE SURFACE SHALL BE SMOOTH AND IN CONFORMITY WITH THE LINES AND GRADES ON THE PLANS.
11. WHEN THE SUBGRADE FAILS TO MEET DENSITY REQUIREMENTS OR SHOULD IT LOSE THE REQUIRED STABILITY, DENSITY OR FINISH, IT SHALL BE REWORKED IN ACCORDANCE WITH TXDOT SUBARTICLE 260.4(7) "REWORKING A SECTION", WHICH MAY REQUIRE AN ADDITIONAL 25% OF THE SPECIFIED LIME AMOUNT.
12. THE TREATED SUBGRADE SHALL BE KEPT MOIST AND PREVENTED FROM DRYING. IN THE EVENT OF A ONE-HALF (1/2) INCH RAINFALL AND/OR IF THE MATERIAL BECOMES DRY AND IS NOT IN COMPLIANCE WITH THE ±2% OPTIMUM MOISTURE, DENSITY AND MOISTURE TESTS SHALL BE RETAKEN.
13. LIME DEPTH DETERMINATIONS WILL BE CONDUCTED AT EACH LOCATION OF DENSITY TESTING, LIME-STABILIZED SUBGRADE SHALL BE A MINIMUM OF 6% AT 8" UNLESS OTHERWISE DIRECTED BY CITY ENGINEER. DENSITY TESTING SHALL BE DONE IMMEDIATELY PRIOR TO PLACEMENT OF REINFORCING STEEL, AND SHALL BE COMPACTED TO A MINIMUM OF 95%. LIME DEPTH TESTS SHALL BE CONDUCTED AT EVERY 150 LF OF ROADWAY ON ALTERNATING LANES OR EVERY 300 LF OF SINGLE LANE. AT LEAST ONE TEST SHALL BE CONDUCTED ON EACH ROADWAY AND/OR CUL-DE-SAC.
14. NO SUBGRADE SHALL BE COVERED WITH ANOTHER MATERIAL UNLESS APPROVED BY THE CITY OF SUGAR LAND AND LIME DEPTH TESTS HAVE BEEN COMPLETED.

HOT MIX ASPHALTIC BASE COURSE:

1. NO HOT MIX ASPHALTIC BASE MAY BE INSTALLED UNTIL THE SUBGRADE HAS BEEN PROPERLY PREPARED AND TESTED AS PER THE PLANS AND SPECIFICATIONS. THE SUBGRADE SHALL BE INSPECTED AND APPROVED BY THE CITY OF SUGAR LAND BEFORE ANY BASE MATERIALS ARE INSTALLED.
2. HOT MIX ASPHALTIC BASE MATERIALS, HANDLING, AND INSTALLATION SHALL COMPLY WITH TXDOT STANDARDS FOR CONSTRUCTION OF HIGHWAYS, STREETS, AND BRIDGES 1995 (SECTION 02711) AND ITS LATEST REVISIONS.
3. HOT MIX ASPHALTIC MATERIALS SHALL BE AT TEMPERATURES BETWEEN 250°F AND 325°F, WHEN PLACED.
4. MATERIALS MAY NOT BE PLACED IN WET CONDITIONS OR IF THE AMBIENT TEMPERATURE IS BELOW 50°F AND FALLING. MATERIALS MAY BE INSTALLED IF THE AMBIENT TEMPERATURE IS TAKEN IN THE SHADE AND IS 40°F AND RISING.
5. PLACE BASE COURSES 4 INCHES OR GREATER IN THICKNESS IN TWO OR MORE LAYERS, EACH HAVING A COMPACTED THICKNESS OF NOT GREATER THAN 4 INCHES.
6. BASE MATERIAL MAY ONLY BE PLACED AGAINST CLEAN, STRAIGHT EDGES. SAW CUTTING, FULL DEPTH, IS REQUIRED IF EXISTING EDGES ARE ROUGH OR UNEVEN.
7. COMPACTION SHALL BEGIN WHILE MATERIAL IS STILL HOT AND AS SOON AS IT WILL BEAR THE ROLLER OR COMPACTOR WEIGHT WITHOUT UNDUE DISPLACEMENT OR HAIR CRACKING.
8. COMPACT SURFACE UNIFORMLY WITH ROLLERS OR TAMPERS IN LOCATIONS NOT READILY ACCESSIBLE (I.E., ALONG CURBS, WALLS, ETC.).
9. UNLESS OTHERWISE SPECIFIED, COMPACT DENSITY TO NOT LESS THAN 95% OF MAXIMUM POSSIBLE DENSITY.
10. A CERTIFIED LAB SHALL BE ON SITE AT ALL TIMES TO TEST AND PROPERLY DOCUMENT THE CONSTRUCTION METHODS AND QUALITY OF MATERIALS.
11. ALL MATERIALS AND WORKMANSHIP SHALL COMPLY TO A.S.T.M. ASPHALT INSTITUTE AND CITY OF SUGAR LAND REQUIREMENTS. FAILURE TO COMPLY WILL RESULT IN REJECTION OF SAID MATERIALS AND SUCH SHALL BE REPLACED AT THE CONTRACTOR'S EXPENSE.
12. DO NOT OPEN BASE TO TRAFFIC UNTIL IT CAN BE MAINTAINED IN GOOD CONDITION AND IS CAPABLE OF SUPPORTING VEHICLE WEIGHT WITHOUT DAMAGE OR DEGRADATION.
13. DENSITIES SHALL BE TAKEN AT A MINIMUM OF AT LEAST ONCE PER 300 LF OF DRIVE LANE OR ONCE PER 250 SQ. YD., WHICHEVER MAY APPLY AND SHALL BE STAGGERED RELATIVE TO TESTING SITES IN ABUTTING TRAFFIC LANES. FAILURE TO MEET MINIMUM REQUIREMENTS SHALL RESULT IN THE REPLACEMENT OF SAID MATERIAL AT CONTRACTOR'S EXPENSE.

No.	DATE	REVISION

SEAL:

DESIGN ENGINEER: _____ DATE _____

CITY OF SUGAR LAND, TEXAS
ENGINEERING DEPARTMENT

CONSTRUCTION PLANS FOR:

GENERAL CONSTRUCTION NOTES I

JOB No.:
DATE:
DESIGNED BY:
DRAWN BY:
CHECKED BY:
SCALE:

SL-01
SHEET OF

REVISION DATE: OCTOBER 2021

Date\Time : Wed, 28 Aug 2024 - 3:16pm User Name : jminter
Path\Name : I:\Projdsk1\1301\1413\ACAD_Sheet_Files\02_PSU_GENERAL NOTES.dwg

PROJECT BENCHMARK
CITY OF SUGAR LAND FLOODPLAIN REFERENCE MONUMENT SGR-RM 006: A BRASS DISK STAM

ASPHALTIC CONCRETE PAVEMENT:

1. ASPHALTIC MATERIAL AND WORKMANSHIP SHALL COMPLY WITH ASTM C 33, ASTM C 131, ASTM C 136, AND TXDOT STANDARD SPECIFICATIONS FOR CONSTRUCTION OF HIGHWAYS, STREETS AND BRIDGES (1993) AND ITS LATEST REVISIONS. ASPHALT SHALL BE TYPE D–100 UNLESS SPECIFICALLY NOTED AND APPROVED BY CITY OF SUGAR LAND ENGINEER.
2. CONTRACTOR SHALL VERIFY ELEVATIONS AND GRADES AND THAT BASE COURSE IS READY TO SUPPORT IMPOSED LOADS.
3. APPLY A PRIME COAT AS PER CITY OF SUGAR LAND AND TXDOT STANDARDS. DO NOT APPLY TACK COAT UNTIL PRIMED BASE COURSE HAS CURED AND IS APPROVED BY THE CONSTRUCTION INSPECTOR.
4. TACK COAT SHALL COMPLY TO CITY OF SUGAR LAND AND TXDOT STANDARDS.
5. DO NOT USE CUTBACK ASPHALT APRIL 16 THROUGH SEPTEMBER 15.
6. DO NOT PLACE ASPHALT WHEN AMBIENT TEMPERATURE IS BELOW 50°F AND FALLING. MIXTURE MAY BE PLACED WHEN AMBIENT TEMPERATURE IS 40°F AND RISING.
7. ON PUBLIC ROADS, STREETS, AND RIGHT–OF–WAY, ASPHALT SHALL BE PLACED IN MAXIMUM 2–INCH LIFTS. IN THE EVENT MORE THAN ONE LIFT IS REQUIRED, EACH LIFT SHALL BE COMPACTED, TESTED, AND GIVEN ADEQUATE TIME FOR THE PREVIOUS LIFT TO CURE AND DRY BEFORE THE NEXT LIFT IS PLACED. IF COMPLETELY CURED AND DRIED, A TACK COAT WILL BE REQUIRED BETWEEN LIFTS.
8. A CERTIFIED LAB SHALL BE ON SITE AT ALL TIMES TO TEST AND PROPERLY DOCUMENT THE CONSTRUCTION METHODS AND QUALITY OF MATERIALS.
9. ROLLING PATTERNS SHALL BE ESTABLISHED BY THE CONTRACTOR, AS RECOMMENDED BY THE LAB, TO ACHIEVE THE MAXIMUM COMPACTION. THE SELECTED ROLL PATTERN SHALL BE FOLLOWED UNLESS CHANGES IN THE PLACEMENT OR MIXTURE OCCUR, WHICH AFFECT COMPACTION. COMPACTION OF 95% SHALL BE ACHIEVED.
10. ASPHALT SHALL NOT BE PLACED ON WET BASE.
11. NO "BIRDBATHS" ARE ALLOWED.
12. IF THE SURFACE RAVELS (SEPARATES), FLUSHES, RUTS, OR DETERIORATES IN ANY MANNER PRIOR TO FINAL ACCEPTANCE, THE CONTRACTOR WILL CORRECT THIS CONDITION AT HIS EXPENSE TO THE SATISFACTION OF THE CITY OF SUGAR LAND ENGINEER.
13. THE CONTRACTOR SHALL PROTECT THE PAVEMENT UNTIL DIRECTED BY THE CITY ENGINEER TO OPEN SAID PAVEMENT TO TRAFFIC.
14. RIDE QUALITY SHALL COMPLY WITH TXDOT ITEM 585, "RIDE QUALITY FOR PAVEMENT SURFACES".
15. SPECIAL NOTE: CONTRACTOR, WHILE MAXIMIZING COMPACTION, SHALL USE CAUTION NOT TO "OVER–ROLL" ASPHALT. PAVEMENT STRETCHED OR OVER–ROLLED, WHERE COMPACTION IS BROKEN, SHALL NOT BE ACCEPTED AND SHALL BE REPAIRED OR REPLACED TO THE CITY ENGINEER'S SATISFACTION AT THE CONTRACTOR'S EXPENSE.
16. CORE SAMPLES SHALL BE TAKEN RANDOMLY AT A MINIMUM OF EVERY 300 LF PER LANE OF ROADWAY OR ONE PER EVERY 250 SQ. YD., WHICHEVER IS APPLICABLE AND SHALL BE STAGGERED RELATIVE TO TESTING SITES IN ABUTTING TRAFFIC LANES.
17. ALL ASPHALTIC CONCRETE PAVEMENT REPAIRS SHALL BE SAW CUT TO FULL ASPHALT DEPTH. REFER TO ASPHALT, STABILIZED BASE, FLEXIBLE BASE, ASPHALT BASE, AND OIL AND EMULSION NOTES. ALL DAMAGED BASE AND SUBGRADES SHALL BE REMOVED AND REPLACED TO THE CITY ENGINEER'S SATISFACTION, AT THE CONTRACTOR'S EXPENSE. CONTRACTOR SHALL BE RESPONSIBLE FOR ANY AREA DAMAGED DURING CONSTRUCTION, INCLUDING AREAS OUTSIDE THE DESIGNATED REPAIR.

STABILIZED CRUSHED CONCRETE:

1. TEST AND ANALYSIS OF AGGREGATE AND BINDER MATERIALS WILL BE PERFORMED IN ACCORDANCE WITH ASTMD 1557 AND ASTM D 4318. CEMENT SHALL BE ASTM C 150 TYPE I.
2. ALL MATERIALS AND WORKMANSHIP SHALL COMPLY WITH TXDOT STANDARD SPECIFICATIONS FOR CONSTRUCTION OF HIGHWAYS, STREETS AND BRIDGES (1993) AND ITS LATEST REVISIONS AND CITY OF SUGAR LAND STANDARDS.
3. PRIME COAT SHALL BE M.C. 30 OR EPR–1 PRIME.
4. DESIGN MIX FOR MINIMUM AVERAGE COMPRESSIVE STRENGTH OF 200 PSI IN 48 HRS. PROVIDE MINIMUM CEMENT CONTENT OF 2 SK PER TON OF MIX. CEMENT CONTENT MAY BE RAISED AT THE CONTRACTOR'S EXPENSE IF TESTS ON FIELD SAMPLES FALL BELOW 200 PSI.
5. THREE SAMPLES SHALL BE MOLDED EACH DAY FOR EACH 300 TONS OF PRODUCTION. COMPRESSIVE STRENGTH SHALL BE THE AVERAGE OF THREE TESTS FOR EACH PRODUCTION LOT. CONTRACTOR SHALL REPLACE, AT HIS OWN EXPENSE, ANY MATERIAL BELOW MINIMUM REQUIREMENTS.
6. CONTRACTOR SHALL VERIFY LINES, GRADES, AND COMPACTED SUBGRADING AS READY TO RECEIVE MATERIALS PRIOR TO ITS PLACEMENT.
7. CEMENT STABILIZED BASE MAY NOT BE PLACED IF AMBIENT TEMPERATURE IS 40°F AND FALLING. BASE MATERIAL MAY BE PLACED IF AMBIENT TEMPERATURE IS 35°F AND RISING.
8. MATERIAL MAY NOT BE PLACED IN LIFTS EXCEEDING 6 INCHES IN DEPTH. EACH LIFT SHALL HAVE DENSITIES TAKEN.
9. CEMENT STABILIZED BASE MAY NOT BE STORED FOR LONG PERIODS. DELIVERY OF MATERIAL AND UTILIZATION SHOULD BE TIMED ACCORDINGLY. MAXIMUM TIME ALLOWED 3 HRS. FROM BATCH TIME TO HAVING BEEN INSTALLED.
10. CEMENT STABILIZED BASE SHALL NOT BE INSTALLED IN WET OR SOFT AREAS.
11. COMPACT TO MINIMUM DENSITY OF 95% OF MAXIMUM DRY DENSITY. UNLESS OTHERWISE INDICATED ON DRAWINGS, MOISTURE SHALL BE BETWEEN + OR –2% OPTIMUM AS DETERMINED BY ASTM D 698.
12. AFTER COMPACTING FINAL COURSE, BLADE SURFACE TO FINAL GRADE. ANY IRREGULARITIES, WEAK SPOTS, AREAS OF EXCESSIVE WETNESS, OR SURFACE HAIR LINE CRACKING SHALL BE REPAIRED AND/OR REPLACED AT CONTRACTOR'S EXPENSE.
13. A CERTIFIED LAB SHALL BE ON SITE AT ALL TIMES TO TEST AND PROPERLY DOCUMENT THE CONSTRUCTION METHODS AND QUALITY OF MATERIALS.
14. COMPACTION TESTING WILL BE PERFORMED IN ACCORDANCE WITH ASTM D 1556 OR ASTM D 2922 AND ASTM D 3017 AT RANDOMLY SELECTED LOCATIONS AS DIRECTED BY CITY OF SUGAR LAND CONSTRUCTION INSPECTOR.
15. A MINIMUM OF ONE CORE SHALL BE TAKEN AT RANDOM LOCATIONS PER 300 LF PER LANE OF ROADWAY OR ONE PER 250 SQ. YD., WHICHEVER MAY APPLY AND SHALL BE STAGGERED RELATIVE TO TESTING SITES IN ABUTTING TRAFFIC LANES.
16. CURE FOR A MINIMUM OF 7 DAYS BEFORE ADDING ASPHALT PAVEMENT COURSES.
17. COVER SURFACE WITH CURING MEMBRANES AT THE FOLLOWING RATES: MC–30:0.01 GAL. PER SQ. YD., OR EPR–1 PRIME:0.15 GAL. PER SQ. YD. DO NOT USE CUTBACK ASPHALT APRIL 16 TO SEPTEMBER 15. PROTECT THE MEMBRANE BY ALLOWING MEMBRANE TO FULLY CURE PRIOR TO PERMITTING TRAFFIC TO DRIVE ON IT.
18. UNSTABILIZED CRUSHED CONCRETE MAY NOT BE USED ON PUBLIC STREETS, ROADS, OR RIGHTS–OF–WAY,
19. STABILIZED LIMESTONE BASE MAY BE SUBSTITUTED FOR STABILIZED CRUSHED CONCRETE IF SUBMITTED AND APPROVED BY THE CITY ENGINEER.

STORM SEWER NOTES:

1. STORM SEWERS SHALL BE DESIGNED AND CONSTRUCTED WITH CITY OF SUGAR LAND'S STANDARD CONSTRUCTION SPECIFICATIONS AND IN ACCORDANCE WITH CITY OF SUGAR LAND STANDARD DETAILS SHEET AND LATEST REVISIONS.
2. ALL PIPE STORM SEWERS SHALL BE INSTALLED, BEDDED, AND BACKFILLED IN ACCORDANCE WITH CITY OF SUGAR LAND STANDARD DETAIL DRAWINGS.
3. ALL CEMENT STABILIZED SAND (C.S.S.) SHALL BE 1–1/2 SK PER CUBIC YD. AND MEET MINIMUM C.S.S. STANDARDS COMPACTED TO 95%.
4. ALL PROPOSED PIPE STUB–OUTS FROM MANHOLES OR INLETS ARE TO BE PLUGGED WITH 8" BRICK WALLS WITH FULL MORTAR HEAD AND BED JOINTS AND GROUTED WITH A MINIMUM OF 1/2–INCH NON–SHRINK GROUT INSIDE AND OUTSIDE, UNLESS OTHERWISE NOTED.
5. AVOID TO MAXIMUM EXTENT, MANHOLES IN HANDICAP RAMPS.
6. ALL STORM SEWER MANHOLES SHALL BE OF SUGAR LAND TYPE "C" UNLESS OTHERWISE NOTED AND SHALL BE LOCATED A MINIMUM OF THREE (3) FEET BACK OF CURB. IF CONFLICT EXISTS, RACK OVER MANHOLE TO MISS PROPOSED CURB.
7. RIM ELEVATIONS SHOWN ON THE PLANS ARE APPROXIMATE ONLY. UTILITY CONTRACTOR SHALL ADJUST RIM ELEVATIONS TO 0.4 FEET ABOVE THE FINISH GRADE AT EACH LOCATION AFTER CONTRACTOR HAS COMPLETED FINAL GRADING. SLOPED FILL SHALL BE ADDED FOR STORM WATER DRAINAGE AWAY FROM RIM.
8. RIM ELEVATIONS SHALL BE PROPERLY ADJUSTED TO GRADE IN PAVEMENT AND SIDEWALKS. APPROVED BLOCKOUTS SHALL BE USED IN PAVEMENT.
9. ALL STORM SEWER MANHOLE COVERS MUST INCLUDE "STORM SEWER" AND "DUMP NO WASTE", "DRAINS TO WATERWAYS" WITH CITY OF SUGAR LAND EMBLEM AS DEPICTED IN THE DETAIL SHEETS.
10. MINIMUM STORM SEWER SIZE SHALL BE 24–INCH DIAMETER. ALL STORM SEWER PIPES 24" AND LARGER ARE TO BE REINFORCED CONCRETE PIPE ASTM C–76 CLASS III, INCLUDING INLET LEADS CROSSING UNDER EXISTING OR PROPOSED PAVEMENTS. ALL INLET LEADS SHALL BE 24" R.C.P. OR LARGER. ALL STORM SEWER PIPE SHALL BE RUBBER GASKETED. ALL CMP PIPE SHALL BE IN ACCORDANCE WITH C.O.S.L. APPROVED PRODUCT LIST AND STANDARD DETAILS.
11. CONTRACTOR SHALL VERIFY NATURAL GROUND SHOTS PRIOR TO MANHOLE CONSTRUCTION.
12. CONTRACTOR SHALL BE RESPONSIBLE FOR VERIFYING LOCATION OF ALL EXISTING UTILITIES PRIOR TO EXCAVATION. DURING THE COURSE OF ANY AND ALL CLEARING, GRUBBING, FILL, GRADING, EXCAVATION OR OTHER CONSTRUCTION, CONTRACTOR SHALL ENSURE THAT STORM DRAINAGE PATHWAYS ARE MAINTAINED AND REMAIN OPEN TO ENSURE POSITIVE DRAINAGE AND THAT SUCH CONVEYANCES ARE NOT IMPEDED OR BLOCKED IN ANY WAY. STORM SEWER INLETS SHALL BE PROTECTED FROM ENTRY OF SILT, TRASH, DEBRIS AND ANY SUBSTANCES DELETERIOUS TO THE STORM SEWER SYSTEM AND/OR WATERWAYS RECEIVING STORM WATER RUNOFF. CONTRACTOR SHALL AT COMPLETION OF WORK, FILL LOW SPOTS AND GRADE ALL RIGHTS–OF–WAY AND UTILITY EASEMENTS AND REGRADE/RESTORE DITCHES AS NECESSARY TO MAINTAIN AND/OR ESTABLISH POSITIVE DRAINAGE.
13. CONTRACTOR TO PROVIDE A MINIMUM OF 6–INCHES CLEARANCE AT UTILITY CROSSINGS AND A MINIMUM OF TWELVE (12) INCHES AT SANITARY SEWER CROSSING.
14. THE CONTRACTOR SHALL BE RESPONSIBLE FOR PROTECTING, MAINTAINING, AND RESTORING ANY BACKSLOPE DRAINAGE SYSTEM DISTURBED AS A RESULT OF HIS WORK.
15. ALL DITCHES SHALL BE RESTORED TO PROPOSED ELEVATIONS TO INSURE PROPER DRAINAGE. ALL OUTFALLS SHALL BE COMPACTED AND ALL DISTURBED AREAS SHALL BE RESEEDED OR RESODDED WITHIN 10 WORKING DAYS OF EACH OCCURRENCE (NO SEPARATE PAY).
16. THE UTILITY CONTRACTOR SHALL ROUGH CUT ALL ROADSIDE SWALES IN PROPER ALIGNMENT AND SLOPE TO WITHIN 0.2 FT. OF FINISH GRADE. THE PAVING CONTRACTOR, UPON COMPLETION OF PAVING, SHALL COMPLETE FINAL GRADING ALIGNMENT OF SWALES AND RESTORE ALL AREAS WITHIN RIGHT–OF–WAY FOR SEEDING OR SODDING AND FERTILIZATION.
17. ALL STORM SEWERS MUST BE CLEAN/FREE OF DIRT AND DEBRIS AT THE TIME AND INITIAL AND FINAL ACCEPTANCE.
18. REFER TO GENERAL NOTES AND C.S.S. NOTES.

SANITARY SEWER NOTES:

1. SANITARY SEWERS, FORCE MAINS, MANHOLES, LIFT STATIONS AND WASTEWATER TREATMENT PLANTS SHALL BE DESIGNED AND CONSTRUCTED AS PER THE REQUIREMENTS OF THE CITY OF SUGAR LAND DESIGN STANDARDS AND CORRESPONDING STANDARD CONSTRUCTION DETAILS SHEETS AND AS PER THE REQUIREMENTS OF THE TEXAS COMMISSION ON ENVIRONMENTAL QUALITY "DESIGN CRITERIA FOR SEWERAGE SYSTEMS". SHOULD A CONFLICT ARISE BETWEEN INFORMATION DEPICTED ON APPROVED CONSTRUCTION DRAWINGS AND/OR INFORMATION INCLUDED IN PROJECT SPECIFICATIONS, CITY OF SUGAR LAND DESIGN STANDARDS SHALL GOVERN.
2. ALL MATERIALS AND PRODUCTS USED IN THE CONSTRUCTION OF SANITARY SEWERS, FORCE MAINS, MANHOLES, LIFT STATIONS AND WASTEWATER TREATMENT PLANTS SHALL COMPLY WITH THE CITY OF SUGAR LAND DESIGN STANDARDS AND THE CURRENT APPROVED PRODUCTS LIST.
3. STACKS SHALL BE BUILT IN ACCORDANCE WITH THE CITY OF SUGAR LAND STANDARD DETAIL DRAWING REQUIREMENTS. EXACT LOCATION OF THE STACK SHALL BE SUPPLIED TO THE CITY ENGINEER OF SUGAR LAND BY THE PROJECT ENGINEER ON SEALED AS–BUILT DRAWINGS AT COMPLETION OF CONSTRUCTION. ALL STACKS SHALL BE INSTALLED WITHIN 3% OF PLUMB RELATIVE TO VERTICAL PLANE AND WILL BE CAPPED AND TERMINATED AT A DEPTH OF 4 FEET BELOW FINISHED GRADE, UNLESS OTHERWISE DIRECTED BY THE CITY ENGINEER.
4. EACH SANITARY SEWER SERVICE LEAD STUB, PLUGGED WYE BRANCH OUTLET AND STACK SHALL BE MARKED IN ACCORDANCE WITH THE DETAILS AT THE TIME OF CONSTRUCTION, BEGINNING AT THE INVERT ELEVATION OF THE STUB OR WYE AND AT AN ELEVATION TWO FEET BELOW THE CAPPED TERMINATION POINT OF THE STACK AND EXTENDING TWO FEET ABOVE FINISHED GRADE.
5. SANITARY SEWER MANHOLES SHALL BE CONSTRUCTED AS PER DRAWINGS INCORPORATED IN CITY OF SUGAR LAND STANDARD CONSTRUCTION DETAILS SHEETS. SUCH MANHOLES SHALL BE CONSTRUCTED A MINIMUM OF ONE FOOT FROM BACK OF CURB ON CURB AND GUTTER ROADWAYS AND THREE FEET FROM EDGE OF TRAVELLED ROADWAY ON THOSE THOROUGHFARES HAVING NO CURBING, MEASURED FROM OUTSIDE DIAMETER OF MANHOLE. ALL SANITARY SEWER MANHOLES SHALL INCORPORATE INFLOW PROTECTORS. SANITARY SEWER MANHOLES SHALL NOT BE INSTALLED BENEATH STREET PAVING EXCEPT WHERE SPECIFICALLY AUTHORIZED BY CITY ENGINEER AND SO DESIGNATED ON APPROVED CONSTRUCTION DRAWINGS. BRICK MANHOLES AND FIBERGLASS MANHOLES ARE PROHIBITED. MANHOLES DEEPER THAN EIGHT FEET SHALL HAVE ECCENTRIC CONES.
6. SANITARY SEWER MANHOLE COVERS SHALL BE MINIMUM OF 32 INCHES IN DIAMETER. ALL SUCH MANHOLE COVERS SHALL HAVE THE CITY OF SUGAR LAND EMBLEM AND THE WORDS "SUGAR LAND" AND "SANITARY SEWER" CAST IN RAISED RELIEF AS DEPICTED IN CITY OF SUGAR LAND STANDARD CONSTRUCTION DETAILS SHEETS.
7. MANHOLE RIM ELEVATIONS SHOWN ON PLANS ARE APPROXIMATE ONLY. UTILITY CONTRACTORS SHALL ADJUST RIM ELEVATIONS TO 0.4 FEET ABOVE FINISHED GRADE, AND 0.5 FEET ABOVE NATURAL GROUND WITHIN RIGHTS–OF–WAY AND EASEMENTS AT EACH MANHOLE LOCATION AFTER PAVEMENT CONTRACTOR HAS COMPLETED FINAL GRADING. THE AREA ADJACENT TO SANITARY SEWER MANHOLE LOCATIONS SHALL BE GRADED AWAY FROM SUCH MANHOLES SO AS PREVENT ENTRY OF STORM WATER RUNOFF TO THE SANITARY SEWER SYSTEM.
8. MINIMUM SEPARATION DISTANCES AS REQUIRED BY TCEQ SECTION 317.13, APPENDIX E MUST BE MAINTAINED BETWEEN POTABLE WATER LINES AND SANITARY SEWERS, FORCE MAINS, MANHOLES, LIFT STATIONS AND WASTEWATER TREATMENT PLANTS. INSTALLATION OF FIRE HYDRANTS WITHIN NINE FEET OF A SANITARY SEWER SYSTEM IS PROHIBITED. REFER TO THE CITY OF SUGAR LAND INFRASTRUCTURE STANDARDS AND CORRESPONDING STANDARD CONSTRUCTION DETAILS SHEETS FOR CONSTRUCTION REQUIREMENTS OF OTHER INSTALLATIONS WHERE SEPARATION DISTANCES OF GREATER THAN NINE FEET CANNOT BE MAINTAINED.
9. TESTING OF SANITARY SEWERS, FORCE MAINS, MANHOLES, LIFT STATIONS AND WASTEWATER TREATMENT PLANTS SHALL BE CONDUCTED AS NOTED IN SANITARY SEWER CHAPTER OF THE CITY OF SUGAR LAND DESIGN STANDARDS AND AS PER THE REQUIREMENTS OF THE TEXAS COMMISSION ON ENVIRONMENTAL QUALITY "DESIGN CRITERIA FOR SEWERAGE SYSTEMS".
10. ALL SANITARY SEWER PIPING AND BEDDING SHALL BE INSPECTED BY CITY CONSTRUCTION INSPECTOR FOR CONFORMANCE WITH CITY DESIGN STANDARDS PRIOR TO BACKFILLING OF PIPING IN TRENCH. CONTRACTOR SHALL NOT COVER PIPING UNTIL SUCH TIME AS INSPECTOR HAS NOTIFIED CONTRACTOR THAT RESULTS OF PIPING INSPECTION ARE SATISFACTORY AND THAT BACKFILLING MAY BE ACCOMPLISHED. ANY PIPING INSTALLED AND/OR BACKFILLED WITHOUT INSPECTOR'S SPECIFIC APPROVAL SHALL BE UNCOVERED AT INSPECTOR'S DIRECTION AND INSPECTED ACCORDINGLY. CONTRACTOR SHALL NOTIFY INSPECTOR 24–HOURS PRIOR TO INSPECTION.
11. ALL COMMERCIAL DEVELOPMENTS WITH A FAR SIDE SANITARY SERVICE LEAD ACROSS THE STREET SHALL PROVIDE A SIX (6) INCH RISER AND CLEAR OUT ON THE PROPERTY SIDE. PUBLIC MAINTENANCE OF THE FAR SIDE LEAD SHALL END AT THIS RISER.

WATER DISTRIBUTION NOTES:

1. WATER MAINS, WATER SERVICE LINES AND ASSOCIATED APPURTENANCES SHALL BE DESIGNED AND CONSTRUCTED AS PER REQUIREMENTS OF THE CITY OF SUGAR LAND DESIGN STANDARDS AND CORRESPONDING STANDARD CONSTRUCTION DETAILS SHEETS AND AS PER THE REQUIREMENTS OF THE TEXAS COMMISSION ON ENVIRONMENTAL QUALITY. SHOULD A CONFLICT ARISE BETWEEN INFORMATION DEPICTED ON APPROVED CONSTRUCTION DRAWINGS AND/OR INFORMATION INCLUDED IN PROJECT SPECIFICATIONS, CITY OF SUGAR LAND DESIGN STANDARDS SHALL GOVERN.
2. ALL MATERIALS AND PRODUCTS USED IN THE CONSTRUCTION OF WATER MAINS, WATER SERVICE LINES AND ASSOCIATED APPURTENANCES SHALL COMPLY WITH THE CITY OF SUGAR LAND DESIGN STANDARDS AND THE CURRENT APPROVED PRODUCTS LIST AS MAINTAINED BY THE CITY'S ENGINEERING DEPARTMENT.
3. ALL GATE VALVES INSTALLED BELOW GRADE SHALL BE OF NON–RISING STEM DESIGN.
4. ALL FIRE HYDRANTS SHALL BE PAINTED AND/OR REPAINTED WITH GEO–GLEN 301 BRIGHT SILVER POLYURETHANE ENAMEL MANUFACTURED BY GEO–GLEN ENTERPRISES, INC. SURFACE PREPARATION SHALL INCLUDE REMOVAL OF OIL, GREASE AND MOISTURE, FOLLOWED BY MEDIA BLASTING TO SSPC–SP15–10–63 SPECIFICATIONS (NEAR WHITE METAL) AS PER MANUFACTURER'S RECOMMENDATIONS. PRIME BARE METAL WITH TP–251 EPOXY PRIMER EPOXY PRIMER OR WITH TP–221, TP–231 OR TP–241 UNIVERSAL PRIMER. 80°F AND 50% RELATIVE HUMIDITY ARE OPTIMAL CONDITIONS FOR APPLICATION OF PRIMER AND OF PAINT. DO NOT APPLY PRIMER AND/OR PAINT WHEN SURFACE TO BE PAINTED IS LESS THAN 5° ABOVE THE DEW POINT IN ORDER TO PREVENT MOISTURE FROM CONDENSING ON THE SURFACE TO BE PRIMED AND/OR PAINTED. A BLUE TRAFFIC BUTTON SHALL BE INSTALLED ON THE STREET 12" OFF THE CENTER LINE FOR EACH HYDRANT
5. MINIMUM SEPARATION DISTANCES AS REQUIRED BY TCEQ SECTION 317.13, 290. APPENDIX E MUST BE MAINTAINED BETWEEN POTABLE WATER LINES AND SANITARY SEWERS, FORCE MAINS, LIFT STATIONS AND WASTEWATER TREATMENT PLANTS. INSTALLATION OF FIRE HYDRANTS WITHIN 9' (FT) OF A SANITARY SEWER SYSTEM IS PROHIBITED. REFER TO C.O.S.L. STANDARDS FOR CONSTRUCTION REQUIREMENTS OF OTHER INSTALLATIONS WHERE DISTANCES ARE GREATHER THAN 9' (NINE) FT. CANNOT BE MAINTAINED.
6. EACH WATER SERVICE LEAD STUB SHALL BE MARKED WITH A PRESSURE TREATED 4 X 4 TIMBER OR PVC PIPE AT THE TIME OF CONSTRUCTION, BEGINNING AT THE INVERT ELEVATION OF THE STUB AND EXTENDING TWO FEET ABOVE FINISHED GRADE. EACH TIMBER MARKER SHALL BE PAINTED BLUE AND LABELED "POTABLE WATER" WITH PIPE SIZE NOTED.
7. TESTING OF WATER MAINS, WATER SERVICE LINES AND ASSOCIATED APPURTENANCES SHALL BE CONDUCTED AS PER REQUIREMENTS OF AWWA C605–94.
8. DISINFECTION OF WATER MAINS, WATER SERVICE LINES AND ASSOCIATED APPURTENANCES SHALL BE CONDUCTED AS PER REQUIREMENTS OF AWWA C651 AND TCEQ. NO CONNECTIONS SHALL BE MADE TO EXISTING WATER LINES UNTIL NEWLY CONSTRUCTED WATER LINES HAVE BEEN THOROUGHLY DISINFECTED, TESTED, FLUSHED, AND SAMPLED AND CONNECTION HAS BEEN AUTHORIZED BY THE CITY ENGINEER.
9. ALL WATER PIPING AND BEDDING SHALL BE INSPECTED BY THE CITY INSPECTOR FOR CONFORMANCE TO DESIGN STANDARDS PRIOR TO BACKFILLING OF PIPING IN TRENCH. CONTRACTOR SHALL NOT COVER PIPING UNTIL SUCH TIME AS INSPECTOR HAS NOTIFIED CONTRACTOR THAT RESULTS OF PIPING INSPECTION ARE SATISFACTORY AND THAT BACKFILLING MAY BE ACCOMPLISHED. ANY PIPING INSTALLED AND/OR BACKFILLED WITHOUT INSPECTOR'S SPECIFIC APPROVAL SHALL BE UNCOVERED AT INSPECTOR'S DIRECTION AND INSPECTED ACCORDINGLY. 24–HOUR NOTICE REQUIRED.
10. ALL MECHANICALLY RESTRAINED FITTINGS MUST BE MEGALUG RESTRAINED JOINTS OR APPROVED EQUAL.
11. THE CITY OF SUGAR LAND MUST HAVE A COPY OF THE BACTERIOLOGICAL TEST RESULTS AT LEAST 24 HOURS PRIOR TO THE INITIAL INSPECTION. IF NOT, THEN THE INSPECTION WILL BE RESCHEDULED.

No.	DATE	REVISION

SEAL:

DATE:

DESIGN ENGINEER:

CITY OF SUGAR LAND, TEXAS
ENGINEERING DEPARTMENT

CONSTRUCTION PLANS FOR:

GENERAL CONSTRUCTION NOTES II

JOB No.:
DATE:
DESIGNED BY:
DRAWN BY:
CHECKED BY:
SCALE:

SL–02

SHEET OF

STATE OF TEXAS
CRAIG W. KALKOMEY
105040
LICENSED
PROFESSIONAL ENGINEER
05/29/2024

PROJECT BENCHMARK
CITY OF SUGAR LAND FLOODPLAIN REFERENCE MONUMENT SGR–RM 006: A BRASS DISK STAMPED "RM 006" SET IN CONCRETE AT THE SOUTHWEST CORNER OF A CONCRETE SLAB FOR A SANITARY SEWER LIFT STATION LOCATED AT THE SOUTH SIDE OF LEXINGTON BLVD. THE POINT IS LOCATED +/– 850 WEST OF THE INTERESECTION OF LEXINGTON BLVD AND AUSTIN PARKWAY.

ELEVATION = 67.85 FEET NAVD88 2001 ADJ.

SURF. COORD. N:13778271.570 & E:3041366.199

SITE TBM1
TBM–FBCLID2_MON3: A BRASS DISK STAMPED "FBCLID2 MON3" SET IN CONCRETE AT PUMP STATION "A". THE POINT IS LOCATED +/– 350 FEET SOUTH OF THE INTERSECTION OF GREYSTONE WAY AND APRIL MEADOWS WAY.

ELEVATION = 79.25 FEET NAVD88 2001 ADJ.

SURF. COORD. N:13774180.945 & E:3037455.324

SITE TBM2
TBM–FBCLID2_MON4: A BRASS DISK STAMPED "FBCLID2 MON4" SET IN CONCRETE AT THE SOUTH SIDE OF THE AUSTIN PARKWAY BRIDGE OVER DITCH "D1".

ELEVATION = 66.90 FEET NAVD88 2001 ADJ.

SURF. COORD. N:13778125.686 & E:3043056.435

SITE TBM3
TBM–FBCLID2_MON6: A BRASS DISK STAMPED "FBCLID2 MON6" SET IN CONCRETE AT THE SOUTH SIDE OF THE AUSTIN PARKWAY BRIDGE OVER DITCH "C".

ELEVATION = 68.82 FEET NAVD88 2001 ADJ.

SURF. COORD. N:13774026.396 & E:3047357.625

NOTES:

RECORD DRAWING
I HEREBY CERTIFY THAT THIS DRAWING REFLECTS THE IMPROVEMENTS CONSTRUCTED AS TO SIZE, LOCATION, AND GRADE; AND THAT THE CONSTRUCTION WAS IN SUBSTANTIAL COMPLIANCE WITH THE CONTRACT DOCUMENTS.

CONTRACTOR:_____ DATE:_____

TITLE:_____

DATE	REVISION	BY

FORT BEND COUNTY L.I.D NO. 14

PUMPS STATION UPGRADE AND REPLACEMENT

GENERAL NOTES II

LJA Engineering, Inc.
1904 W. Grand Parkway North, Suite 100, Katy, Texas 77449
Phone 713.953.5200 Fax 713.953.5026 FRN–F–1386

LJA PROJECT NO.: 1301–1413

DRAWN: N.E. & J.M. DESIGN: _____ DATE: Aug–24

SCALE: N/A

SHEET NO. C3 OF C20

PUMP STATION UPGRADE AND REPLACEMENT – JOB NO. 1301–1413

REVISION DATE: OCTOBER 2021

Date\Time : Wed, 28 Aug 2024 – 3:18pm User Name : jminter
Path\Name : I:\Projekt\1301\1413\CAD_Sheet_Files\03_PSU_GENERAL NOTES II.dwg

EXISTING
VILLAGES OF AVALON

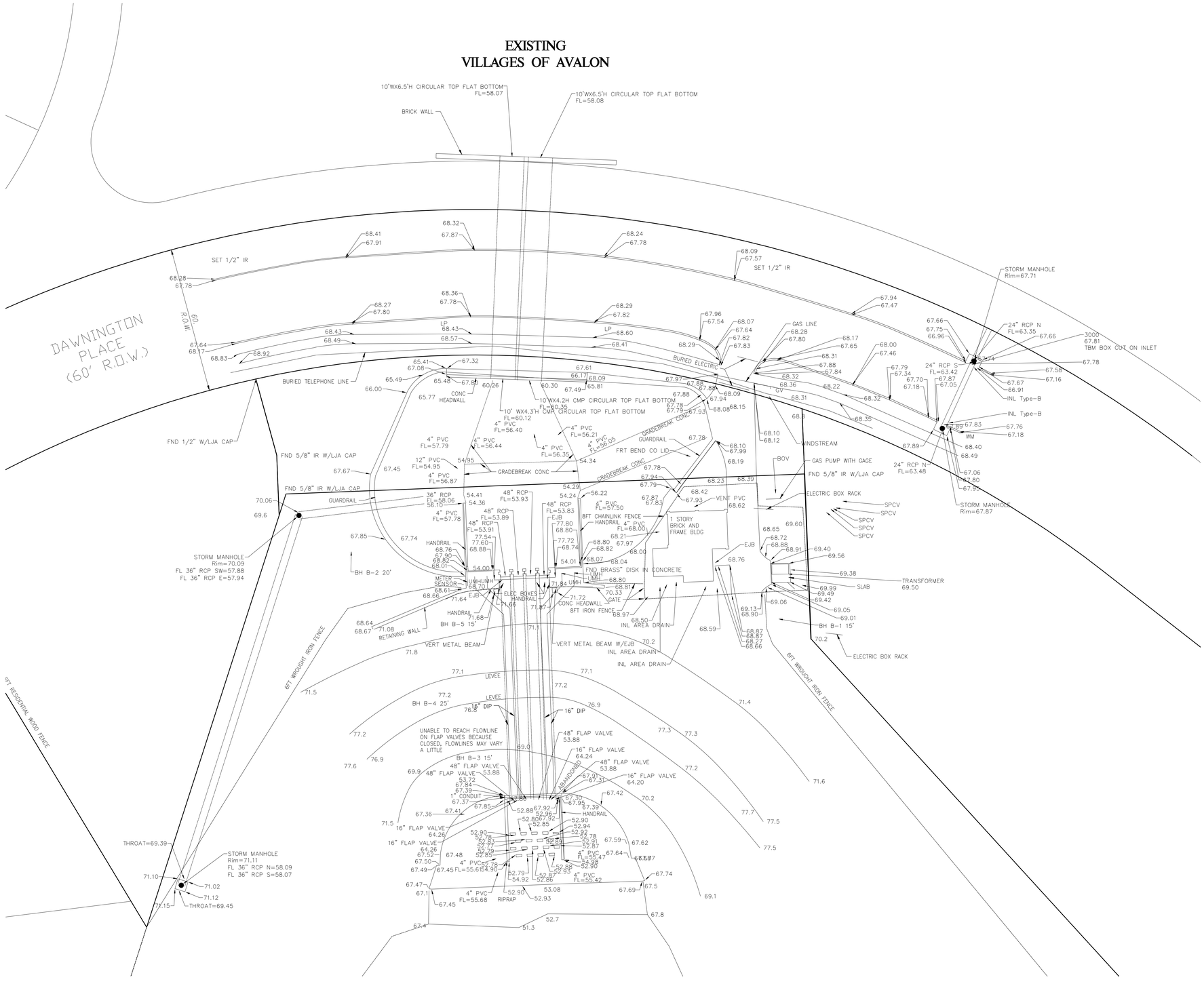

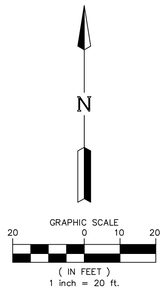

PROJECT BENCHMARK
CITY OF SUGAR LAND FLOODPLAIN REFERENCE MONUMENT SGR-RM 006: A BRASS DISK STAMPED "RM 006" SET IN CONCRETE AT THE SOUTHWEST CORNER OF A CONCRETE SLAB FOR A SANITARY SEWER LIFT STATION LOCATED AT THE SOUTH SIDE OF LEXINGTON BLVD. THE POINT IS LOCATED +/- 850 WEST OF THE INTERESECTION OF LEXINGTON BLVD AND AUSTIN PARKWAY.

ELEVATION = 67.85 FEET NAVD88 2001 ADJ.

SURF. COORD. N:13778271.570 & E:3041366.199

SITE TBM1
TBM-FBCLID2_MON3: A BRASS DISK STAMPED "FBCLID2 MON3" SET IN CONCRETE AT PUMP STATION "A". THE POINT IS LOCATED +/- 350 FEET SOUTH OF THE INTERSECTION OF GREYSTONE WAY AND APRIL MEADOWS WAY.

ELEVATION = 79.25 FEET NAVD88 2001 ADJ.

SURF. COORD. N:13774180.945 & E:3037455.324

SITE TBM2
TBM-FBCLID2_MON4: A BRASS DISK STAMPED "FBCLID2 MON4" SET IN CONCRETE AT THE SOUTH SIDE OF THE AUSTIN PARKWAY BRIDGE OVER DITCH "D1".

ELEVATION = 66.90 FEET NAVD88 2001 ADJ.

SURF. COORD. N:13778125.686 & E:3043056.435

SITE TBM3
TBM-FBCLID2_MON6: A BRASS DISK STAMPED "FBCLID2 MON6" SET IN CONCRETE AT THE SOUTH SIDE OF THE AUSTIN PARKWAY BRIDGE OVER DITCH "C".

ELEVATION = 68.82 FEET NAVD88 2001 ADJ.

SURF. COORD. N:13774026.396 & E:3047357.625

NOTES:

RECORD DRAWING

I HEREBY CERTIFY THAT THIS DRAWING REFLECTS THE IMPROVEMENTS CONSTRUCTED AS TO SIZE, LOCATION, AND GRADE; AND THAT THE CONSTRUCTION WAS IN SUBSTANTIAL COMPLIANCE WITH THE CONTRACT DOCUMENTS.

CONTRACTOR:_____ DATE: _____

TITLE: _____

DATE	REVISION	BY

FORT BEND COUNTY L.I.D NO. 14

PUMPS STATION UPGRADE AND REPLACEMENT

EXISTING SITE PLAN

LJA Engineering, Inc.
1904 W. Grand Parkway North
Suite 100
Katy, Texas 77449
Phone 713.953.5200
Fax 713.953.5026
FRN-F-1386

LJA PROJECT NO.: 1301-1413

DRAWN: N.E. & J.M. DESIGN: _____ DATE: Aug-24

SCALE: 1" = 20'

SHEET NO. C4 OF C20

STATE OF TEXAS
CRAIG W. KALKOMEY
105040
LICENSED PROFESSIONAL ENGINEER
08/29/2024

PUMP STATION UPGRADE AND REPLACEMENT - JOB NO. 1301-1413

Date\Time : Wed, 28 Aug 2024 - 3:18pm User Name : jminter
Path\Name : I:\Projdsk1\1301\1413\CADD_Sheet_Files\04_PSU_EXISTING SITE PLAN.dwg

EXISTING
VILLAGES OF AVALON

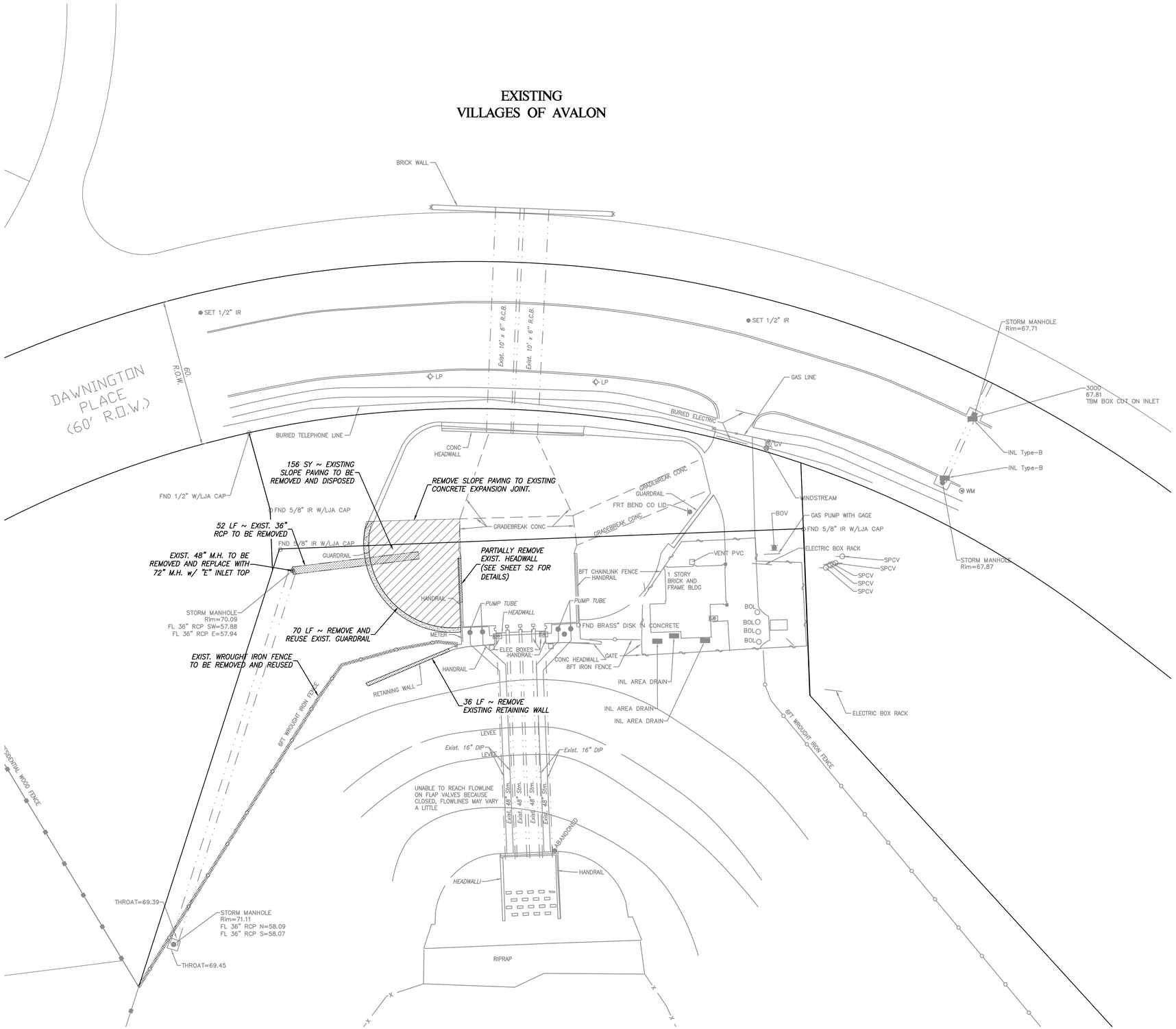

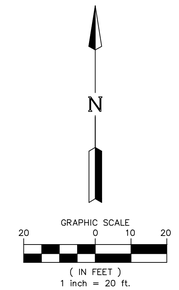

PROJECT BENCHMARK
CITY OF SUGAR LAND FLOODPLAIN REFERENCE MONUMENT SGR-RM 006: A BRASS DISK STAMPED "RM 006" SET IN CONCRETE AT THE SOUTHWEST CORNER OF A CONCRETE SLAB FOR A SANITARY SEWER LIFT STATION LOCATED AT THE SOUTH SIDE OF LEXINGTON BLVD. THE POINT IS LOCATED +/- 850 WEST OF THE INTERESECTION OF LEXINGTON BLVD AND AUSTIN PARKWAY.

ELEVATION = 67.85 FEET NAVD88 2001 ADJ.

SURF. COORD. N:13778271.570 & E:3041366.199

SITE TBM1
TBM-FBCLID2_MON3: A BRASS DISK STAMPED "FBCLID2 MON3" SET IN CONCRETE AT PUMP STATION "A". THE POINT IS LOCATED +/- 350 FEET SOUTH OF THE INTERSECTION OF GREYSTONE WAY AND APRIL MEADOWS WAY.

ELEVATION = 79.25 FEET NAVD88 2001 ADJ.

SURF. COORD. N:13774180.945 & E:3037455.324

SITE TBM2
TBM-FBCLID2_MON4: A BRASS DISK STAMPED "FBCLID2 MON4" SET IN CONCRETE AT THE SOUTH SIDE OF THE AUSTIN PARKWAY BRIDGE OVER DITCH "D1".

ELEVATION = 66.90 FEET NAVD88 2001 ADJ.

SURF. COORD. N:13778125.686 & E:3043056.435

SITE TBM3
TBM-FBCLID2_MON6: A BRASS DISK STAMPED "FBCLID2 MON6" SET IN CONCRETE AT THE SOUTH SIDE OF THE AUSTIN PARKWAY BRIDGE OVER DITCH "C".

ELEVATION = 68.82 FEET NAVD88 2001 ADJ.

SURF. COORD. N:13774026.396 & E:3047357.625

NOTES:

RECORD DRAWING

I HEREBY CERTIFY THAT THIS DRAWING REFLECTS THE IMPROVEMENTS CONSTRUCTED AS TO SIZE, LOCATION, AND GRADE; AND THAT THE CONSTRUCTION WAS IN SUBSTANTIAL COMPLIANCE WITH THE CONTRACT DOCUMENTS.

CONTRACTOR:_____ DATE:_____

TITLE: _____

DATE	REVISION	BY

FORT BEND COUNTY L.I.D NO. 14

PUMPS STATION UPGRADE AND REPLACEMENT

DEMOLITION SITE PLAN



LJA Engineering, Inc.
1904 W. Grand Parkway North
Suite 100
Katy, Texas 77449
Phone 713.953.5200
Fax 713.953.5026
FRN-F-1386

LJA PROJECT NO.: 1301-1413

DRAWN: N.E. & J.M. DESIGN: _____ DATE: Aug-24

SCALE: 1" = 20' SHEET NO. C5 OF C20

PUMP STATION UPGRADE AND REPLACEMENT - JOB NO. 1301-1413

Date\Time : Wed, 28 Aug 2024 - 3:19pm User Name : jminter
Path\Name : I:\Projdesk\1301\1413\ACAD_Sheet_Files\05_PSU_DEMOLITION SITE PLAN.dwg

EXISTING
VILLAGES OF AVALON

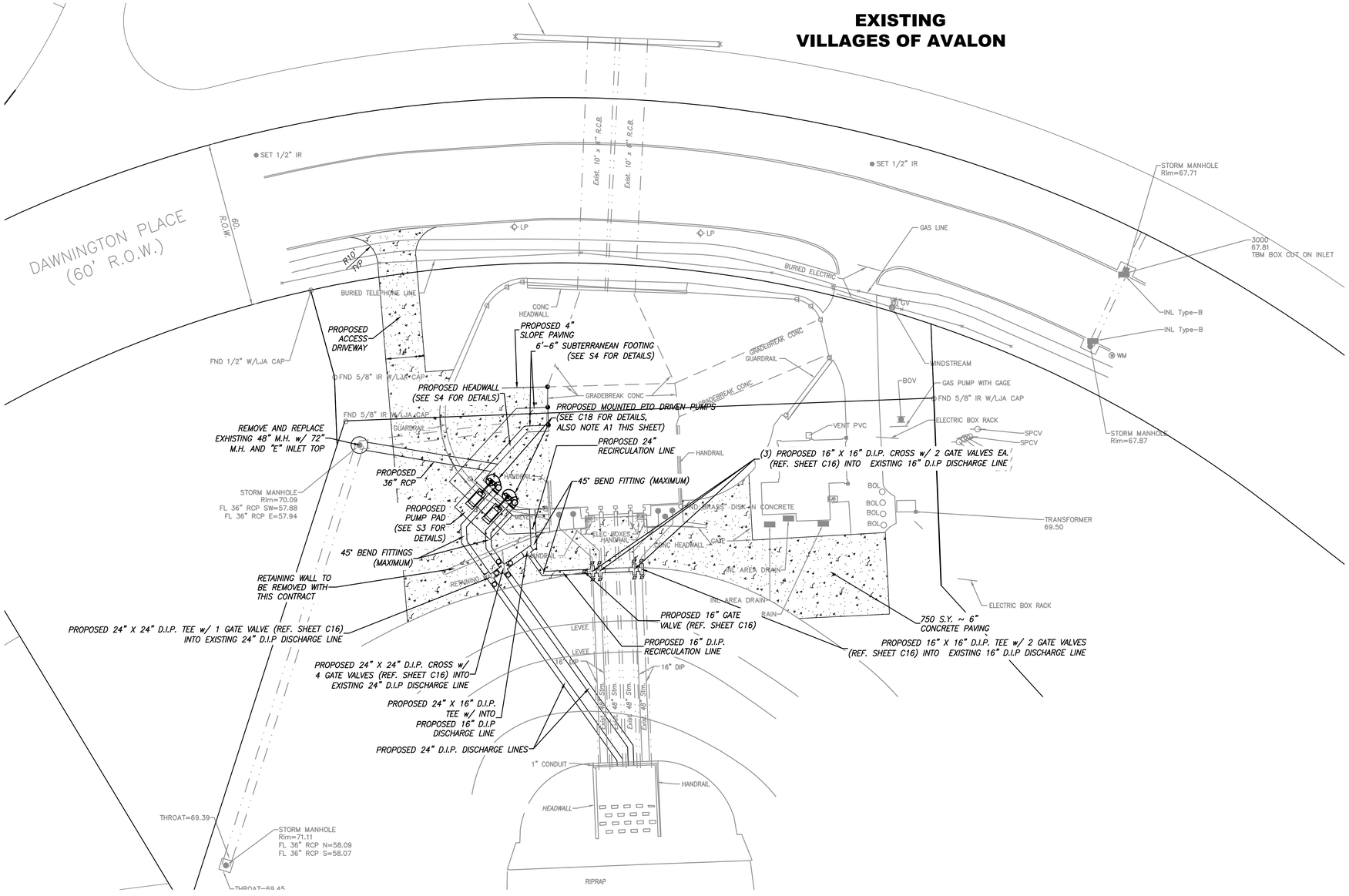

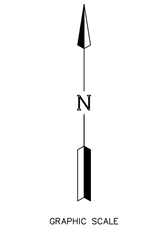

PROJECT BENCHMARK

CITY OF SUGAR LAND FLOODPLAIN REFERENCE MONUMENT SGR-RM 006: A BRASS DISK STAMPED "RM 006" SET IN CONCRETE AT THE SOUTHWEST CORNER OF A CONCRETE SLAB FOR A SANITARY SEWER LIFT STATION LOCATED AT THE SOUTH SIDE OF LEXINGTON BLVD. THE POINT IS LOCATED +/- 850 WEST OF THE INTERESECTION OF LEXINGTON BLVD AND AUSTIN PARKWAY.

ELEVATION = 67.85 FEET NAVD88 2001 ADJ.

SURF. COORD. N:13778271.570 & E:3041366.199

SITE TBM1

TBM-FBCLID2_MON3: A BRASS DISK STAMPED "FBCLID2 MON3" SET IN CONCRETE AT PUMP STATION "A". THE POINT IS LOCATED +/- 350 FEET SOUTH OF THE INTERSECTION OF GREYSTONE WAY AND APRIL MEADOWS WAY.

ELEVATION = 79.25 FEET NAVD88 2001 ADJ.

SURF. COORD. N:13774180.945 & E:3037455.324

SITE TBM2

TBM-FBCLID2_MON4: A BRASS DISK STAMPED "FBCLID2 MON4" SET IN CONCRETE AT THE SOUTH SIDE OF THE AUSTIN PARKWAY BRIDGE OVER DITCH "D1".

ELEVATION = 66.90 FEET NAVD88 2001 ADJ.

SURF. COORD. N:13778125.686 & E:3043056.435

SITE TBM3

TBM-FBCLID2_MON6: A BRASS DISK STAMPED "FBCLID2 MON6" SET IN CONCRETE AT THE SOUTH SIDE OF THE AUSTIN PARKWAY BRIDGE OVER DITCH "C".

ELEVATION = 68.82 FEET NAVD88 2001 ADJ.

SURF. COORD. N:13774026.396 & E:3047357.625

NOTES:

NOTE A1: PROPOSED MOUNTED PTO DRIVEN PUMP EXACT LOCATION AND CONFIGURATION TO BE FIELD FITTED WITH COORDINATION FROM PTO PUMP REPRESENTATIVE

ADDITIONAL LEVEE PENETRATION NOTES & REQUIREMENTS

1. PRIOR TO EXCAVATION OF THE LEVEE, CONTRACTOR SHALL NOTIFY THE SPLID OPERATOR & ENGINEER FOR APPROVAL.
2. CONTRACTOR TO KEEP DISTRICT OPERATOR AND ENGINEER APPRISED OF ALL SIGNIFICANT LEVEE EXCAVATION OPERATIONS & SCHEDULING BENCHMARKS.
3. CONTRACTOR SHALL CONTINUOUSLY MONITOR BRAZOS RIVER LEVELS AND RAINFALL FORECASTS DURING OPEN CUT OPERATIONS.
4. CONTRACTOR SHALL SUBMIT TO THE DISTRICT ENGINEER A DETAILED SHORING / TEMPORARY FLOOD PROTECTION PLAN AND SCHEDULE FOR THE HEADWALL AND LEVEE PENETRATION FOR REVIEW AND APPROVAL. ANY SHORING SHALL BE DESIGNED BY A LICENSED ENGINEER IN THE STATE OF TEXAS AND SHALL MAINTAIN A FLOOD PROTECTION WATER ELEVATION OF 75.0'.
5. ALL LEVEE BACKFILL MATERIAL SHALL BE APPROVED BY THE GEOTECHNICAL ENGINEER. BACKFILL SHALL BE PLACED IN 6-INCH LIFTS(MAXIMUM) AND COMPACTED TO 95% STANDARD PROCTOR DENSITY (ASTM D698)
6. ALL SHEET PILING, SHORING, PUMPING, OR OTHER DEWATERING MEASURES TO BE CONSIDERED INCIDENTAL TO THE OVERALL PROJECT AND NO ADDITIONAL FUNDING WILL BE PROVIDED.
7. THE ADDITIONAL SHORING PLAN AND SUBMITTAL REQUIREMENTS SHOWN HERE DO NOT APPLY TO CONSTRUCTION ACTIVITIES WITH NO IMPACT ON THE LEVEE.

RECORD DRAWING

I HEREBY CERTIFY THAT THIS DRAWING REFLECTS THE IMPROVEMENTS CONSTRUCTED AS TO SIZE, LOCATION, AND GRADE; AND THAT THE CONSTRUCTION WAS IN SUBSTANTIAL COMPLIANCE WITH THE CONTRACT DOCUMENTS.

CONTRACTOR:_____ DATE:_____

TITLE: _____

DATE	REVISION	BY

FORT BEND COUNTY L.I.D NO. 14

PUMPS STATION UPGRADE AND REPLACEMENT

PROPOSED SITE PLAN

LJA Engineering, Inc.
1904 W. Grand Parkway North
Suite 100
Katy, Texas 77449
Phone 713.953.5200
Fax 713.953.5026
FRN-F-1386

STATE OF TEXAS
CRAIG W. KALKOMEY
105040
LICENSED PROFESSIONAL ENGINEER
08/29/2024

LJA PROJECT NO.: 1301-1413

DRAWN: N.E. & J.M. DESIGN: _____ DATE: Aug-24

SCALE: 1" = 20'

SHEET NO. C6 OF C20

PUMP STATION UPGRADE AND REPLACEMENT - JOB NO. 1301-1413

Date\Time : Thu, 29 Aug 2024 - 4:00pm User Name : jminter
Path\Name : I:\Projekt\1301\1413\ACAD_Sheet_Files\08_PSU_ PROPOSED SITE PLAN.dwg

EXISTING
VILLAGES OF AVALON

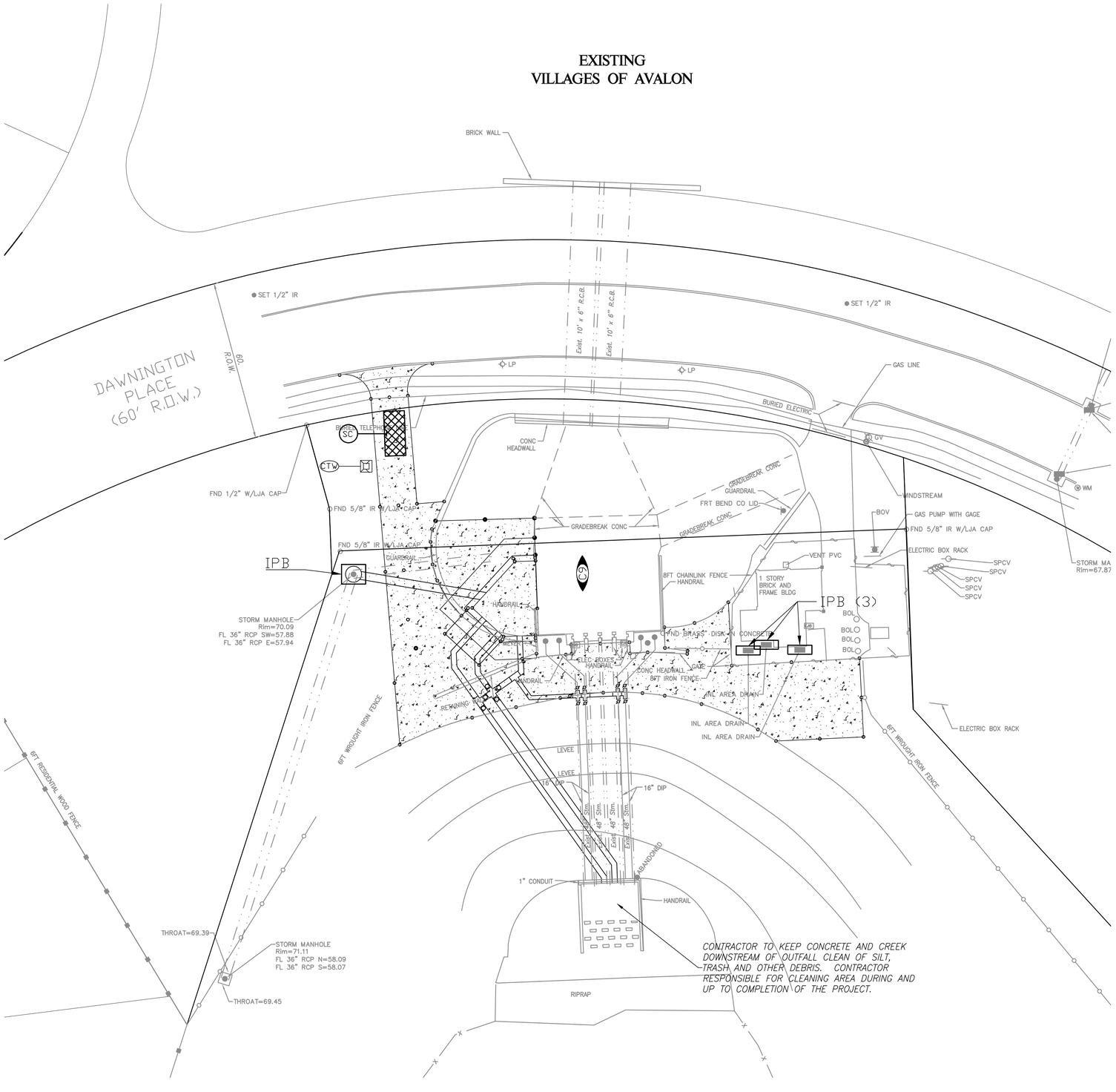

LEGEND

- SC — STABILIZED CONSTRUCTION EXIT
- RFB — REINFORCED FILTER FABRIC SILT BARRIER FENCE
- CONCRETE TRUCK WASHOUT
- 10 — INDICATES SHEET REFERENCE NUMBER
- IPB — INSTALL INLET PROTECTION BARRIERS (TYP. ALL PROPOSED INLETS)
- RFD — ROCK FILTER DAM

N

GRAPHIC SCALE
20 0 10 20
(IN FEET)
1 inch = 20 ft.

GENERAL NOTES TO CONTRACTOR

1. LOCATE FUEL/MATERIAL STORAGE AREAS AWAY FROM STORM WATER CONVEYANCE SYSTEMS. USE A LINER UNDER ABOVE GROUND STORAGE TANKS. USE SILT FENCING, HAY BALES, OR BERMS AROUND FUEL STORAGE AREAS. NO SEPARATE PAY.
2. CONTRACTOR WILL ADVISE OWNER IMMEDIATELY, VERBALLY, AND IN WRITING, OF ANY FUEL SPILLS ONTO THE PROJECT/CONSTRUCTION AREA AND THE ACTIONS TAKEN TO REMEDY THE PROBLEM.
3. CONTRACTOR IS RESPONSIBLE FOR COMPLYING WITH ALL ENVIRONMENTAL LAWS.
4. CONTRACTOR IS RESPONSIBLE FOR DISPOSING OF FUELS, MATERIALS, AND EXCAVATIONS IN A LEGALLY APPROVED MANNER.
5. CONTRACTOR IS TO INSPECT ALL STRUCTURAL CONTROLS SPECIFIED HEREIN, AT A MINIMUM, ONCE EVERY 7 CALENDAR DAYS OR WITHIN 24 HOURS AFTER ANY STORM EVENT THAT MEETS OR EXCEEDS 0.5 INCHES/24 HOUR PERIOD.
6. CONTRACTOR WILL PROVIDE PROTECTED STORAGE AREAS FOR CHEMICALS, PAINTS, SOLVENTS, FERTILIZERS, AND OTHER POTENTIALLY TOXIC MATERIALS.
7. CONTRACTOR IS RESPONSIBLE FOR PROVIDING ADEQUATELY MAINTAINED SANITARY FACILITIES.
8. CONTRACTOR SHALL BE RESPONSIBLE FOR INSTALLATION, IDENTIFICATION, AND REMOVAL OF ALL DEBRIS FOR DESIGNATED CONCRETE WASH-OUT SITE.
9. ALL UNSATISFACTORY AND/OR WASTE MATERIALS INCLUDING VEGETATION, ROOTS, CONCRETE AND DEBRIS SHALL BE DISPOSED OF OFFSITE BY THE CONTRACTOR.
10. CONTRACTOR IS RESPONSIBLE FOR CLEANING MUD AND/ OR DIRT TRACKED ONTO EXISTING STREETS BY HIS WORKMAN'S, SUPPLIER'S OR SUBCONTRACTOR'S VEHICLES. STREETS MUST BE CLEANED WITHIN 24 HOURS OF WHEN THE TRACKING OCCURS.
11. ALL DISTURBED AREAS, BOTH ON-SITE AND OFF, NOT COVERED BY PAVEMENT OR PERMANENT STRUCTURES SHALL BE HYDROMULCH SEEDED.
12. CONTRACTOR SHALL MAINTAIN EXISTING SWALES TO ENSURE PROPER DRAINAGE THROUGHOUT THE COURSE OF THE CONSTRUCTION
13. CONTRACTOR SHALL PLACE BLOCK OR STRIP SOD ON ALL DISTURBANCE AT TRANSITION FROM EARTHEN SLOPE TO CONCRETE SLOPE PAVING.

CONSTRUCTION SPECIFICATIONS FOR SILT BARRIER FENCE

1. MANUFACTURER OR SUPPLIER AS CONFORMING TO THE FOLLOWING REQUIREMENTS (PER ASTM METHODS):

PHYSICAL PROPERTY	REQUIREMENTS
FILTERING EFFICIENCY	75% (MIN.)
MAX. ELONGATION	STD. STRENGTH = 30 LBS./LIN. IN.(MIN.)
FLOW RATE	0.3 GAL./SQ. FT./MIN. (MIN.)

2. SYNTHETIC REINFORCED FILTER FABRIC SHALL CONTAIN ULTRAVIOLET RAY INHIBITORS AND STABILIZERS TO PROVIDE A MINIMUM OF 6 MONTHS OF EXPECTED USABLE CONSTRUCTION LIFE AT A TEMPERATURE RANGE OF 0° TO 120°.

B. INSTALLATION

1. THE HEIGHT OF THE SILT FENCE SHALL BE A MINIMUM OF 18" AND A MAXIMUM OF 36" ABOVE FINAL GRADE.
2. STANDARD STRENGTH SYNTHETIC FILTER FABRIC SHALL BE PURCHASED IN A CONTINUOUS ROLL AND CUT TO THE LENGTH OF THE BARRIER TO AVOID THE USE OF JOINTS (AND THUS IMPROVE THE BARRIER'S STRENGTH AND EFFICIENCY).
3. STAKES FOR THE SILT FENCE SHALL BE 2" x 2" WOOD WITH A MINIMUM LENGTH OF 3 FEET.
4. THE STAKES SHALL BE SPACED A MAXIMUM OF 6' APART AT THE BARRIER LOCATION AND DRIVEN SECURELY INTO THE GROUND (12" MIN.)
5. A TRENCH SHALL BE EXCAVATED APPROX. 4" WIDE AND 4" DEEP ALONG THE LINE OF STAKES AND UPSLOPE FROM THE BARRIER.
6. THE SILT FENCE SHALL BE STAPLED TO THE STAKES, WITH 8" (MIN.) OF FABRIC EXTENDED INTO THE TRENCH. HEAVY DUTY WIRE STAPLES AT LEAST ONE-HALF INCH LONG SHALL BE USED. THE FENCE SHALL NOT BE STAPLED TO EXISTING TREES.
7. THE TRENCH SHALL BE BACKFILLED AND THE SOIL COMPACTED OVER THE FENCE MATERIAL.
8. IF A SILT FENCE IS TO BE CONSTRUCTED ACROSS A DITCH LINE OR SWALE, THE BARRIER SHALL BE OF SUFFICIENT LENGTH TO ELIMINATE END FLOW, AND THE PLAN CONFIGURATION SHALL RESEMBLE AN ARC OR HORSESHOE WITH THE ENDS ORIENTED UPSLOPE.
9. SILT FENCES SHALL BE REMOVED WHEN THEY HAVE SERVED THEIR USEFUL PURPOSE, BUT NOT BEFORE THE UPSLOPE AREA HAS BEEN PERMANENTLY STABILIZED.

C. MAINTENANCE:

1. SILT FENCES SHALL BE INSPECTED IMMEDIATELY AFTER RAINFALL AND AT LEAST DAILY DURING PROLONGED RAINFALL. ANY REQUIRED REPAIRS SHALL BE MADE IMMEDIATELY.
2. SHOULD THE FABRIC ON A SILT FENCE DECOMPOSE OR BECOME INEFFECTIVE PRIOR TO THE END OF THE EXPECTED USABLE LIFE AND THE SILT FENCE IS STILL NECESSARY, IT SHALL BE REPLACED IMMEDIATELY.
3. SEDIMENT DEPOSITS SHALL BE REMOVED WHEN DEPOSITS REACH APPROX. 1/3 THE HEIGHT OF THE FENCE.
4. ANY SEDIMENT DEPOSITS REMAINING IN PLACE AFTER THE SILT FENCE IS NO LONGER REQUIRED SHALL BE DRESSED TO CONFORM WITH THE EXISTING GRADE, PREPARED AND SEEDED.
5. THERE SHOULD BE NO GAPS OR SAGS IN THE SILT FENCE.

PROJECT BENCHMARK
CITY OF SUGAR LAND FLOODPLAIN REFERENCE MONUMENT SGR-RM 006: A BRASS DISK STAMPED "RM 006" SET IN CONCRETE AT THE SOUTHWEST CORNER OF A CONCRETE SLAB FOR A SANITARY SEWER LIFT STATION LOCATED AT THE SOUTH SIDE OF LEXINGTON BLVD. THE POINT IS LOCATED +/- 850 WEST OF THE INTERESECTION OF LEXINGTON BLVD AND AUSTIN PARKWAY.
ELEVATION = 67.85 FEET NAVD88 2001 ADJ.
SURF. COORD. N:13778271.570 & E:3041366.199

SITE TBM1
TBM-FBCLID2_MON3: A BRASS DISK STAMPED "FBCLID2 MON3" SET IN CONCRETE AT PUMP STATION "A". THE POINT IS LOCATED +/- 350 FEET SOUTH OF THE INTERSECTION OF GREYSTONE WAY AND APRIL MEADOWS WAY.
ELEVATION = 79.25 FEET NAVD88 2001 ADJ.
SURF. COORD. N:13774180.945 & E:3037455.324

SITE TBM2
TBM-FBCLID2_MON4: A BRASS DISK STAMPED "FBCLID2 MON4" SET IN CONCRETE AT THE SOUTH SIDE OF THE AUSTIN PARKWAY BRIDGE OVER DITCH "D1".
ELEVATION = 66.90 FEET NAVD88 2001 ADJ.
SURF. COORD. N:13778125.686 & E:3043056.435

SITE TBM3
TBM-FBCLID2_MON6: A BRASS DISK STAMPED "FBCLID2 MON6" SET IN CONCRETE AT THE SOUTH SIDE OF THE AUSTIN PARKWAY BRIDGE OVER DITCH "C".
ELEVATION = 68.82 FEET NAVD88 2001 ADJ.
SURF. COORD. N:13774026.396 & E:3047357.625

NOTES:

RECORD DRAWING

I HEREBY CERTIFY THAT THIS DRAWING REFLECTS THE IMPROVEMENTS CONSTRUCTED AS TO SIZE, LOCATION, AND GRADE; AND THAT THE CONSTRUCTION WAS IN SUBSTANTIAL COMPLIANCE WITH THE CONTRACT DOCUMENTS.

CONTRACTOR:_____ DATE:_____

TITLE:_____

DATE	REVISION	BY

FORT BEND COUNTY L.I.D NO. 14

PUMPS STATION UPGRADE AND REPLACEMENT

STORM WATER POLLUTION PREVENTION PLAN

LJA Engineering, Inc.
1904 W. Grand Parkway North, Suite 100, Katy, Texas 77449
Phone 713.953.5200
Fax 713.953.5026
FRN-F-1386

STATE OF TEXAS — CRAIG W. KALKOMEY — 105040 — LICENSED PROFESSIONAL ENGINEER — 08/19/2024

LJA PROJECT NO.: 1301-1413

DRAWN: N.E. & J.M. DESIGN: _____ DATE: Aug-24

SCALE: 1" = 20'

SHEET NO. C7 OF C20

PUMP STATION UPGRADE AND REPLACEMENT - JOB NO. 1301-1413

Date\Time : Wed, 28 Aug 2024 - 3:39pm User Name : jminter
Path\Name : I:\Projdsk\1301\1413\ACAD_Sheet_Files\07_PSU_STORM WATER POLLUTION PREVENTION PLAN.dwg

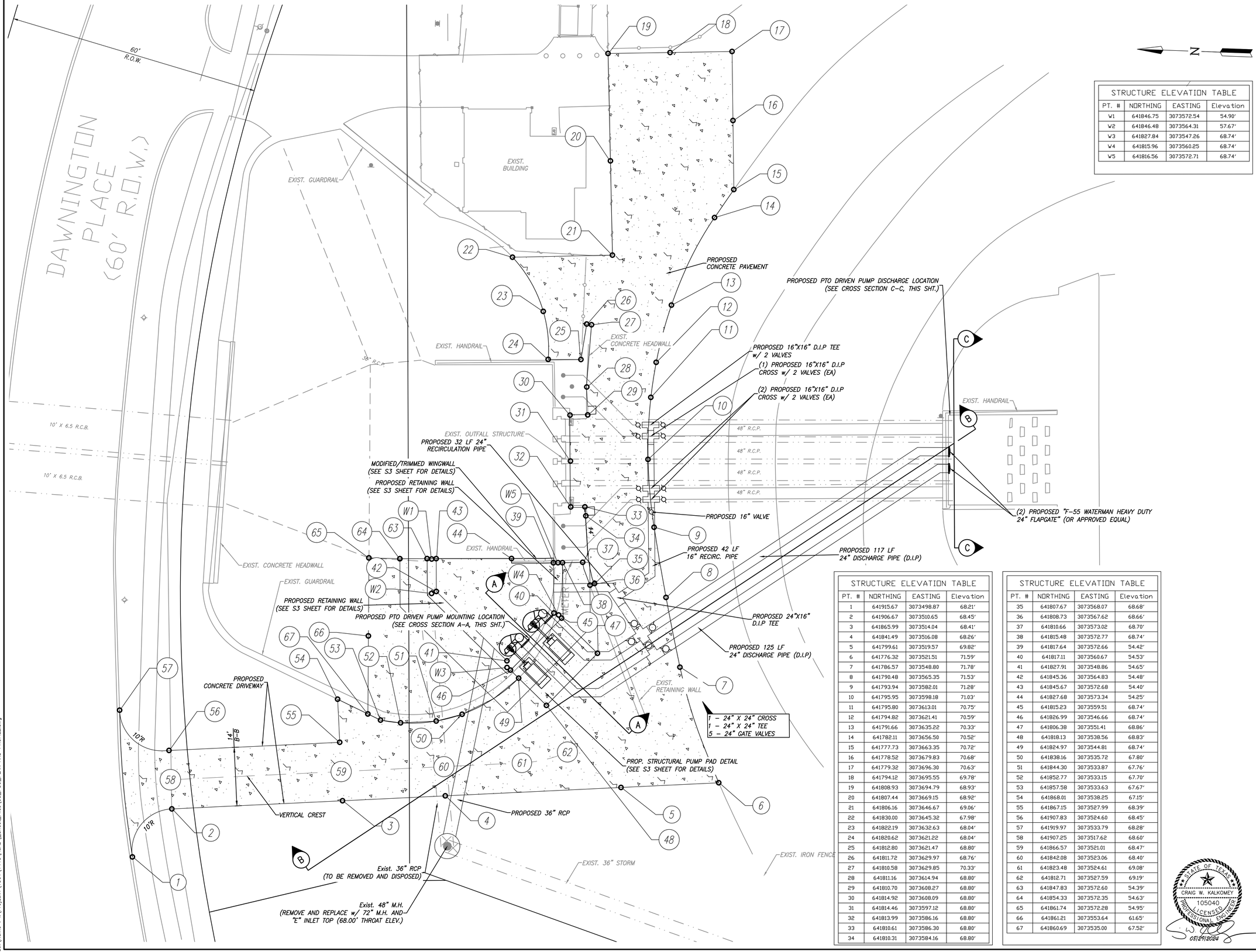

STRUCTURE ELEVATION TABLE			
PT. #	NORTHING	EASTING	Elevation
W1	641846.75	3073572.54	54.90'
W2	641846.48	3073564.31	57.67'
W3	641827.84	3073547.26	68.74'
W4	641815.96	3073560.25	68.74'
W5	641816.56	3073572.71	68.74'

STRUCTURE ELEVATION TABLE			
PT. #	NORTHING	EASTING	Elevation
1	641915.67	3073498.87	68.21'
2	641906.67	3073510.65	68.45'
3	641865.99	3073514.04	68.41'
4	641841.49	3073516.08	68.26'
5	641799.61	3073519.57	69.82'
6	641776.32	3073521.51	71.59'
7	641786.57	3073548.80	71.78'
8	641790.48	3073565.35	71.53'
9	641793.94	3073582.01	71.28'
10	641795.95	3073598.18	71.03'
11	641795.80	3073613.01	70.75'
12	641794.82	3073621.41	70.59'
13	641791.66	3073635.22	70.33'
14	641782.11	3073656.50	70.52'
15	641777.73	3073663.35	70.72'
16	641778.52	3073679.83	70.68'
17	641779.32	3073696.30	70.63'
18	641794.12	3073695.55	69.78'
19	641808.93	3073694.79	68.93'
20	641807.44	3073669.15	68.92'
21	641806.16	3073646.67	69.06'
22	641830.00	3073645.32	67.98'
23	641822.19	3073632.63	68.04'
24	641820.62	3073621.22	68.04'
25	641812.80	3073621.47	68.80'
26	641811.72	3073629.97	68.76'
27	641810.58	3073629.85	70.33'
28	641811.16	3073614.94	68.80'
29	641810.70	3073608.27	68.80'
30	641814.92	3073608.09	68.80'
31	641814.46	3073597.12	68.80'
32	641813.99	3073586.16	68.80'
33	641810.61	3073586.30	68.80'
34	641810.31	3073584.16	68.80'

STRUCTURE ELEVATION TABLE			
PT. #	NORTHING	EASTING	Elevation
35	641807.67	3073568.07	68.68'
36	641808.73	3073567.62	68.66'
37	641810.66	3073573.02	68.70'
38	641815.48	3073572.77	68.74'
39	641817.64	3073572.66	54.42'
40	641817.11	3073560.67	54.53'
41	641827.91	3073548.86	54.65'
42	641845.36	3073564.83	54.48'
43	641845.67	3073572.68	54.40'
44	641827.68	3073573.34	54.25'
45	641815.23	3073559.51	68.74'
46	641826.99	3073546.66	68.74'
47	641806.38	3073551.41	68.86'
48	641818.13	3073538.56	68.83'
49	641824.97	3073544.81	68.74'
50	641838.16	3073535.72	67.80'
51	641844.30	3073533.87	67.76'
52	641852.77	3073533.15	67.70'
53	641857.58	3073533.63	67.67'
54	641868.01	3073538.25	67.15'
55	641867.15	3073527.99	68.39'
56	641907.83	3073524.60	68.45'
57	641919.97	3073533.79	68.28'
58	641907.25	3073517.62	68.60'
59	641866.57	3073521.01	68.47'
60	641842.08	3073523.06	68.40'
61	641823.48	3073524.61	69.08'
62	641812.71	3073527.59	69.19'
63	641847.83	3073572.60	54.39'
64	641854.33	3073572.35	54.63'
65	641861.74	3073572.28	54.95'
66	641861.21	3073553.64	61.65'
67	641860.69	3073535.00	67.52'

PROJECT BENCHMARK

CITY OF SUGAR LAND FLOODPLAIN REFERENCE MONUMENT SGR-RM 006: A BRASS DISK STAMPED "RM 006" SET IN CONCRETE AT THE SOUTHWEST CORNER OF A CONCRETE SLAB FOR A SANITARY SEWER LIFT STATION LOCATED AT THE SOUTH SIDE OF LEXINGTON BLVD. THE POINT IS LOCATED +/- 850 WEST OF THE INTERESECTION OF LEXINGTON BLVD AND AUSTIN PARKWAY.

ELEVATION = 67.85 FEET NAVD88 2001 ADJ.

SURF. COORD. N:13778271.570 & E:3041366.199

SITE TBM1

TBM-FBCLID2_MON3: A BRASS DISK STAMPED "FBCLID2 MON3" SET IN CONCRETE AT PUMP STATION "A". THE POINT IS LOCATED +/- 350 FEET SOUTH OF THE INTERSECTION OF GREYSTONE WAY AND APRIL MEADOWS WAY.

ELEVATION = 79.25 FEET NAVD88 2001 ADJ.

SURF. COORD. N:13774180.945 & E:3037455.324

SITE TBM2

TBM-FBCLID2_MON4: A BRASS DISK STAMPED "FBCLID2 MON4" SET IN CONCRETE AT THE SOUTH SIDE OF THE AUSTIN PARKWAY BRIDGE OVER DITCH "D1".

ELEVATION = 66.90 FEET NAVD88 2001 ADJ.

SURF. COORD. N:13778125.686 & E:3043056.435

SITE TBM3

TBM-FBCLID2_MON6: A BRASS DISK STAMPED "FBCLID2 MON6" SET IN CONCRETE AT THE SOUTH SIDE OF THE AUSTIN PARKWAY BRIDGE OVER DITCH "C".

ELEVATION = 68.82 FEET NAVD88 2001 ADJ.

SURF. COORD. N:13774026.396 & E:3047357.625

NOTES:

RECORD DRAWING

I HEREBY CERTIFY THAT THIS DRAWING REFLECTS THE IMPROVEMENTS CONSTRUCTED AS TO SIZE, LOCATION, AND GRADE; AND THAT THE CONSTRUCTION WAS IN SUBSTANTIAL COMPLIANCE WITH THE CONTRACT DOCUMENTS.

CONTRACTOR:_____ DATE:_____

TITLE:_____

DATE	REVISION	BY

FORT BEND COUNTY L.I.D NO. 14

PUMPS STATION UPGRADE AND REPLACEMENT

PLAN VIEW

LJA Engineering, Inc.
1904 W. Grand Parkway North
Suite 100
Katy, Texas 77449
Phone 713.953.5200
Fax 713.953.5026
FRN-F-1386

LJA PROJECT NO.: 1301-1413

DRAWN: N.E. & J.M. DESIGN: _____ DATE: Aug-24

SCALE: 1" = 10'

SHEET NO. C8 OF C20

STATE OF TEXAS
CRAIG W. KALKOMEY
105040
LICENSED PROFESSIONAL ENGINEER
08/28/2024

PUMP STATION UPGRADE AND REPLACEMENT - JOB NO. 1301-1413

Date\Time : Wed, 28 Aug 2024 - 3:41pm User Name : jminter
Path\Name : I:\Projdsk\1301\1413\ACAD_Sheet_Files\08_PSU_PLAN AND PROFILE.dwg

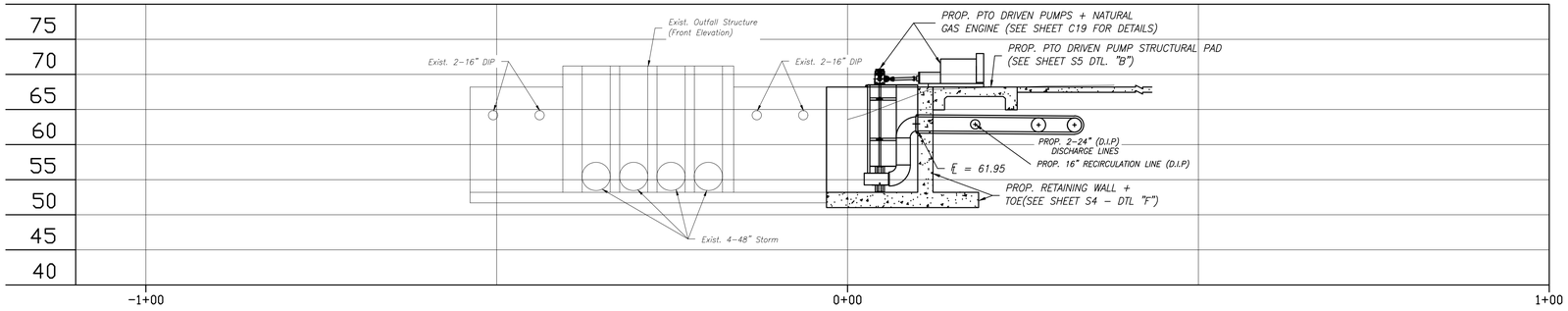

NOTE: ALL PROPOSED D.I.P OR PLASTIC PIPE INFLECTION POINTS (BOTH VERTICAL AND HORIZONTAL) TO BE CONSTRUCTED WITH MECHANICALLY RESTRAINED JOINTS.

SECTION A-A

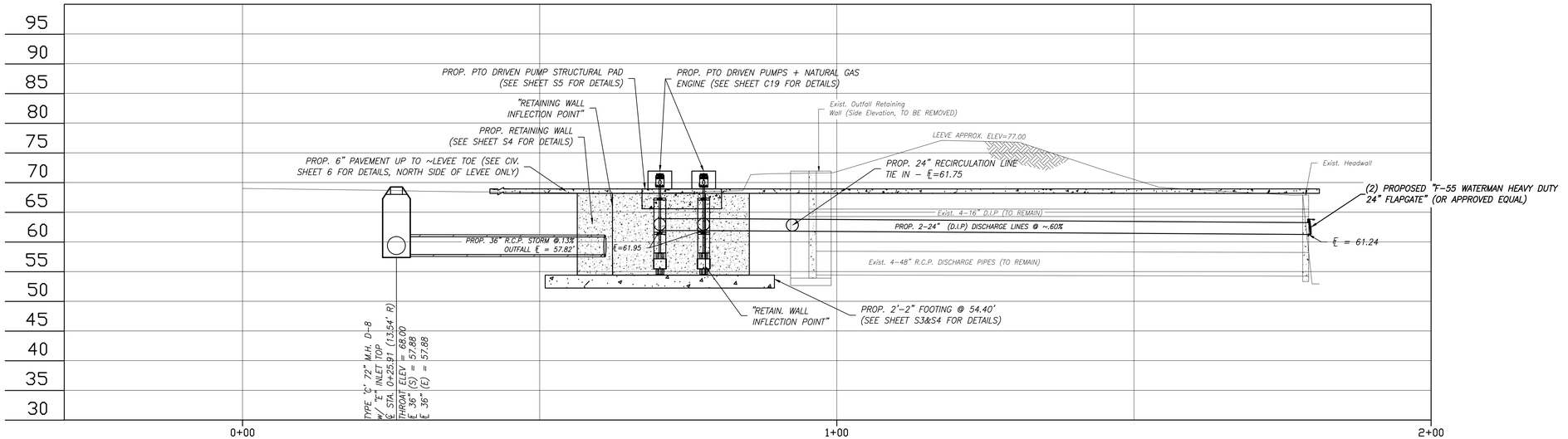

SECTION B-B

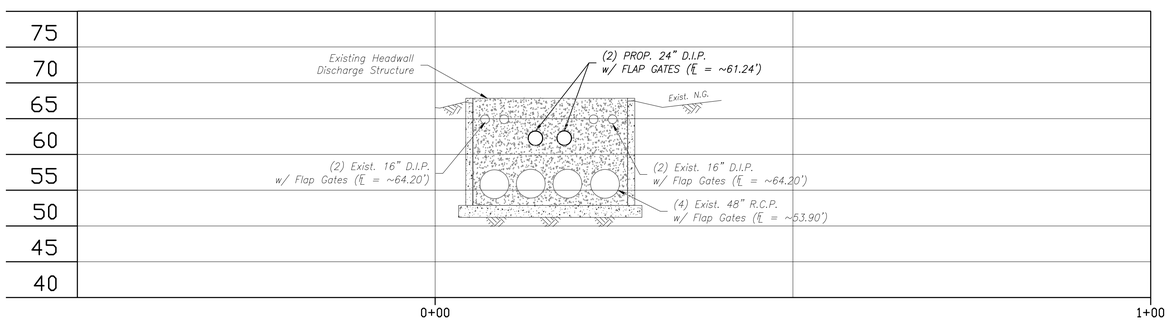

SECTION C-C

NOTE:
PIPE PENETRATIONS TO BE SEALED PER THE FOLLOWING:

-CORE DRILLED OPENINGS:
SEAL ANNULAR REGION AROUND PIPE WITH UV RESISTANT EPDM LINK SEAL. LINK SEAL TO HAVE STAINLESS STEEL HARDWARE AND BE INSTALLED PER THE MANUFACTURER INSTRUCTIONS. CONTRACTOR TO SUBMIT PROPOSED LINK SEAL SPECIFICATIONS TO ENGINEERING FOR REVIEW AND APPROVAL.

-ANNUAL "LEAVE OUT" REGIONS IN CAST-IN-PLACE WALLS:
INSTALL HYDROPHILIC WATERSTOP AROUND PIPE AND CONCRETE (SIKA HYDROTITE OR EQUAL). THEN GROUT ANNULAR REGION WITH NON-SHRINK CEMENTIOUS GROUT (SIKAGROUT 212 OR EQUAL)

CONTRACTOR MAY SUBMIT ALTERNATE WATER SEALING SETUPS FOR ENGINEER'S REVIEW AND APPROVAL.

PROJECT BENCHMARK
CITY OF SUGAR LAND FLOODPLAIN REFERENCE MONUMENT SGR-RM 006: A BRASS DISK STAMPED "RM 006" SET IN CONCRETE AT THE SOUTHWEST CORNER OF A CONCRETE SLAB FOR A SANITARY SEWER LIFT STATION LOCATED AT THE SOUTH SIDE OF LEXINGTON BLVD. THE POINT IS LOCATED +/- 850 WEST OF THE INTERESECTION OF LEXINGTON BLVD AND AUSTIN PARKWAY.
ELEVATION = 67.85 FEET NAVD88 2001 ADJ.
SURF. COORD. N:13778271.570 & E:3041366.199

SITE TBM1
TBM-FBCLID2_MON3: A BRASS DISK STAMPED "FBCLID2 MON3" SET IN CONCRETE AT PUMP STATION "A". THE POINT IS LOCATED +/- 350 FEET SOUTH OF THE INTERSECTION OF GREYSTONE WAY AND APRIL MEADOWS WAY.
ELEVATION = 79.25 FEET NAVD88 2001 ADJ.
SURF. COORD. N:13774180.945 & E:3037455.324

SITE TBM2
TBM-FBCLID2_MON4: A BRASS DISK STAMPED "FBCLID2 MON4" SET IN CONCRETE AT THE SOUTH SIDE OF THE AUSTIN PARKWAY BRIDGE OVER DITCH "D1".
ELEVATION = 66.90 FEET NAVD88 2001 ADJ.
SURF. COORD. N:13778125.686 & E:3043056.435

SITE TBM3
TBM-FBCLID2_MON6: A BRASS DISK STAMPED "FBCLID2 MON6" SET IN CONCRETE AT THE SOUTH SIDE OF THE AUSTIN PARKWAY BRIDGE OVER DITCH "C".
ELEVATION = 68.82 FEET NAVD88 2001 ADJ.
SURF. COORD. N:13774026.396 & E:3047357.625

NOTES:

RECORD DRAWING
I HEREBY CERTIFY THAT THIS DRAWING REFLECTS THE IMPROVEMENTS CONSTRUCTED AS TO SIZE, LOCATION, AND GRADE; AND THAT THE CONSTRUCTION WAS IN SUBSTANTIAL COMPLIANCE WITH THE CONTRACT DOCUMENTS.
CONTRACTOR:_____ DATE:_____
TITLE:_____

DATE	REVISION	BY

FORT BEND COUNTY L.I.D NO. 14

PUMPS STATION UPGRADE AND REPLACEMENT

SECTION VIEW

LJA Engineering, Inc.
1904 W. Grand Parkway North, Suite 100, Katy, Texas 77449
Phone 713.953.5200 Fax 713.953.5026 FRN-F-1386

STATE OF TEXAS · CRAIG W. KALKOMEY · 105040 · LICENSED PROFESSIONAL ENGINEER · 08/29/2024

LJA PROJECT NO.: 1301-1413
DRAWN: N.E. & J.M. DESIGN: _____ DATE: Aug-24
SCALE: 1" = 10'
SHEET NO. C9 OF C20

PUMP STATION UPGRADE AND REPLACEMENT - JOB NO. 1301-1413

Date\Time : Wed, 28 Aug 2024 - 3:42pm User Name : jminter
Path\Name : I:\Projdesk1\1301\1413\ACAD_Sheet_Files\08_PSU_PLAN AND PROFILE.dwg

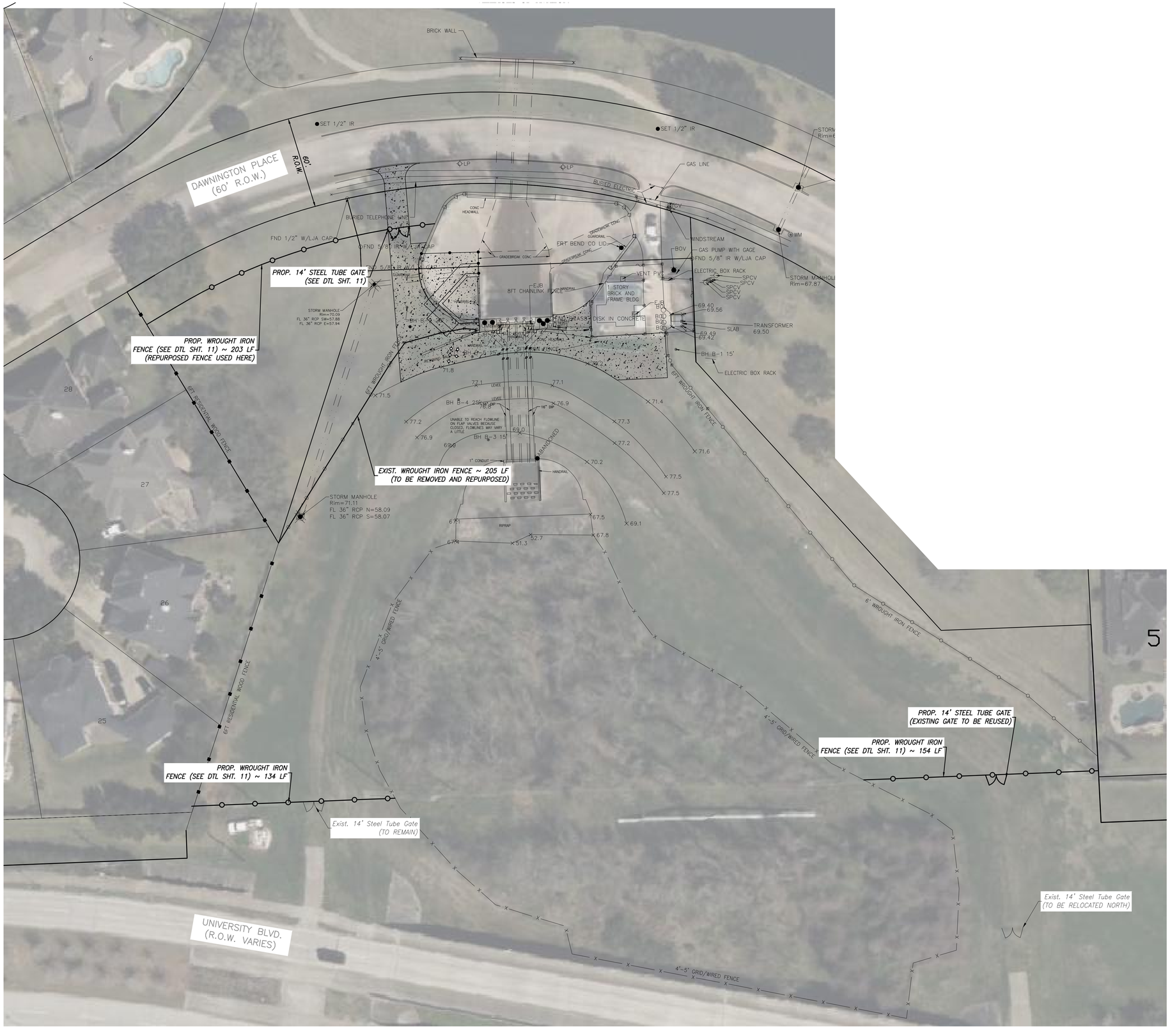

PROJECT BENCHMARK

CITY OF SUGAR LAND FLOODPLAIN REFERENCE MONUMENT SGR-RM 006: A BRASS DISK STAMPED "RM 006" SET IN CONCRETE AT THE SOUTHWEST CORNER OF A CONCRETE SLAB FOR A SANITARY SEWER LIFT STATION LOCATED AT THE SOUTH SIDE OF LEXINGTON BLVD. THE POINT IS LOCATED +/- 850 WEST OF THE INTERESECTION OF LEXINGTON BLVD AND AUSTIN PARKWAY.

ELEVATION = 67.85 FEET NAVD88 2001 ADJ.

SURF. COORD. N:13778271.570 & E:3041366.199

SITE TBM1

TBM-FBCLID2_MON3: A BRASS DISK STAMPED "FBCLID2 MON3" SET IN CONCRETE AT PUMP STATION "A". THE POINT IS LOCATED +/- 350 FEET SOUTH OF THE INTERSECTION OF GREYSTONE WAY AND APRIL MEADOWS WAY.

ELEVATION = 79.25 FEET NAVD88 2001 ADJ.

SURF. COORD. N:13774180.945 & E:3037455.324

SITE TBM2

TBM-FBCLID2_MON4: A BRASS DISK STAMPED "FBCLID2 MON4" SET IN CONCRETE AT THE SOUTH SIDE OF THE AUSTIN PARKWAY BRIDGE OVER DITCH "D1".

ELEVATION = 66.90 FEET NAVD88 2001 ADJ.

SURF. COORD. N:13778125.686 & E:3043056.435

SITE TBM3

TBM-FBCLID2_MON6: A BRASS DISK STAMPED "FBCLID2 MON6" SET IN CONCRETE AT THE SOUTH SIDE OF THE AUSTIN PARKWAY BRIDGE OVER DITCH "C".

ELEVATION = 68.82 FEET NAVD88 2001 ADJ.

SURF. COORD. N:13774026.396 & E:3047357.625

NOTES:

RECORD DRAWING

I HEREBY CERTIFY THAT THIS DRAWING REFLECTS THE IMPROVEMENTS CONSTRUCTED AS TO SIZE, LOCATION, AND GRADE; AND THAT THE CONSTRUCTION WAS IN SUBSTANTIAL COMPLIANCE WITH THE CONTRACT DOCUMENTS.

CONTRACTOR:_____ DATE:_____

TITLE:_____

DATE	REVISION	BY

FORT BEND COUNTY L.I.D NO. 14

PUMPS STATION UPGRADE AND REPLACEMENT

FENCING PLAN

LJA Engineering, Inc.
1904 W. Grand Parkway North
Suite 100
Katy, Texas 77449
Phone 713.953.5200
Fax 713.953.5026
FRN-F-1386

LJA PROJECT NO.: 1301-1413

DRAWN: N.E. & J.M. DESIGN: _____ DATE: Aug-24

SCALE: 1" = 30'

SHEET NO. C10 OF C20

STATE OF TEXAS
CRAIG W. KALKOMEY
105040
LICENSED
PROFESSIONAL ENGINEER
08/29/2024

PUMP STATION UPGRADE AND REPLACEMENT - JOB NO. 1301-1413

Date\Time : Wed, 28 Aug 2024 - 3:42pm User Name : jminter
Path\Name : I:\Projdsk1\1301\1413\CADD_Sheet_Files\10_PSU_ FENCING PLAN.dwg

#	DESCRIPTION
1	1 3/4" SQ FORERUNNER RAIL
2	1" SQ X .125" PICKET
3	3" SQ POST
4	BX301 BRACKET
5	6" SQ X 1/4" BASE PLATE

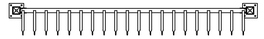

TOP VIEW

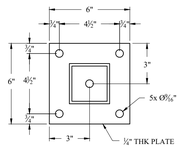

#5003G

BASE PLATE

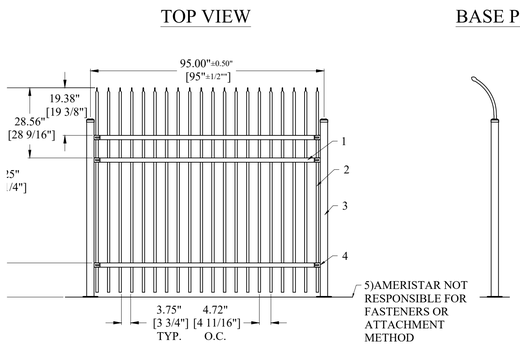

ELEVATION VIEW

SIDE VIEW

#	DESCRIPTION
1	4" Sq. POST
2	2" Sq. x .250" GATE END
3	1 3/4" FORERUNNER RAIL
4	1" Sq. x .125" PICKET
5	GS5 GUSSET
	DSX200, MHH180



TOP VIEW

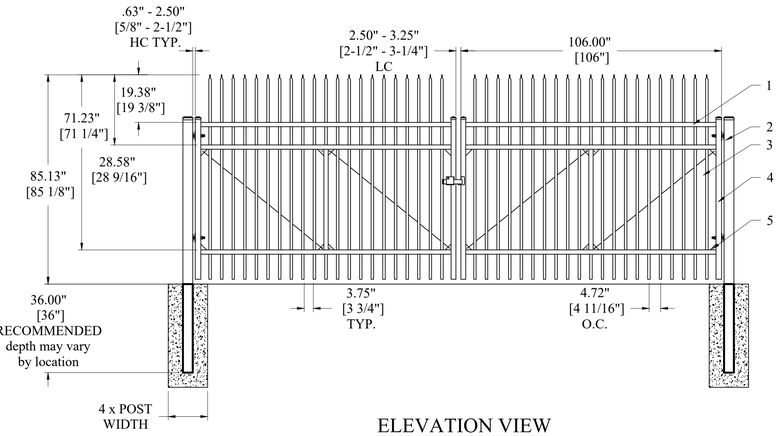

ELEVATION VIEW

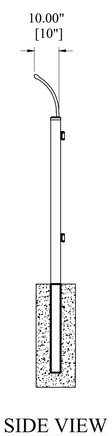

SIDE VIEW

#	DESCRIPTION
1	4" Sq. POST
2	1¾" FORERUNNER RAIL
3	1" Sq. PICKET
4	2" Sq. GATE END
	HX518, HX402, HX305

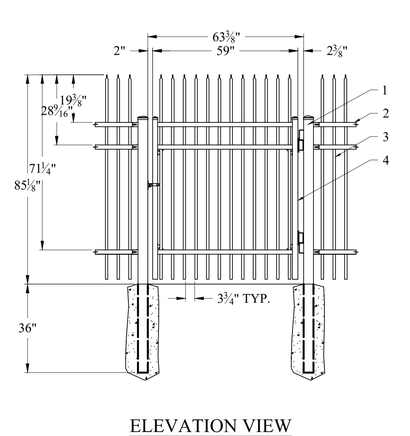

ELEVATION VIEW

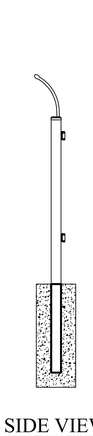

SIDE VIEW

A 7' TALL FENCE DETAIL
N.T.S.

B 7' TALL GATE DETAIL
N.T.S.

PROJECT BENCHMARK

CITY OF SUGAR LAND FLOODPLAIN REFERENCE MONUMENT SGR-RM 006: A BRASS DISK STAMPED "RM 006" SET IN CONCRETE AT THE SOUTHWEST CORNER OF A CONCRETE SLAB FOR A SANITARY SEWER LIFT STATION LOCATED AT THE SOUTH SIDE OF LEXINGTON BLVD. THE POINT IS LOCATED +/- 850 WEST OF THE INTERESECTION OF LEXINGTON BLVD AND AUSTIN PARKWAY.

ELEVATION = 67.85 FEET NAVD88 2001 ADJ.

SURF. COORD. N:13778271.570 & E:3041366.199

SITE TBM1

TBM-FBCLID2_MON3: A BRASS DISK STAMPED "FBCLID2 MON3" SET IN CONCRETE AT PUMP STATION "A". THE POINT IS LOCATED +/- 350 FEET SOUTH OF THE INTERSECTION OF GREYSTONE WAY AND APRIL MEADOWS WAY.

ELEVATION = 79.25 FEET NAVD88 2001 ADJ.

SURF. COORD. N:13774180.945 & E:3037455.324

SITE TBM2

TBM-FBCLID2_MON4: A BRASS DISK STAMPED "FBCLID2 MON4" SET IN CONCRETE AT THE SOUTH SIDE OF THE AUSTIN PARKWAY BRIDGE OVER DITCH "D1".

ELEVATION = 66.90 FEET NAVD88 2001 ADJ.

SURF. COORD. N:13778125.686 & E:3043056.435

SITE TBM3

TBM-FBCLID2_MON6: A BRASS DISK STAMPED "FBCLID2 MON6" SET IN CONCRETE AT THE SOUTH SIDE OF THE AUSTIN PARKWAY BRIDGE OVER DITCH "C".

ELEVATION = 68.82 FEET NAVD88 2001 ADJ.

SURF. COORD. N:13774026.396 & E:3047357.625

NOTES:

RECORD DRAWING

I HEREBY CERTIFY THAT THIS DRAWING REFLECTS THE IMPROVEMENTS CONSTRUCTED AS TO SIZE, LOCATION, AND GRADE; AND THAT THE CONSTRUCTION WAS IN SUBSTANTIAL COMPLIANCE WITH THE CONTRACT DOCUMENTS.

CONTRACTOR:_____ DATE:_____

TITLE:_____

DATE	REVISION	BY

FORT BEND COUNTY L.I.D NO. 14

PUMPS STATION UPGRADE AND REPLACEMENT

FENCING DETAILS

LJA Engineering, Inc.
1904 W. Grand Parkway North
Suite 100
Katy, Texas 77449
Phone 713.953.5200
Fax 713.953.5026
FRN-F-1386

STATE OF TEXAS
CRAIG W. KALKOMEY
105040
LICENSED
PROFESSIONAL ENGINEER
08/28/2024

LJA PROJECT NO.: 1301-1413

DRAWN: N.E. & J.M. DESIGN: _____ DATE: Aug-24

SCALE: 1" = 30'

SHEET NO. C11 OF C20

PUMP STATION UPGRADE AND REPLACEMENT - JOB NO. 1301-1413

Date\Time : Wed, 28 Aug 2024 - 3:43pm User Name : jminter
Path\Name : I:\Projekt\1301\1413\CAD_Sheet_Files\T1_PSU_ FENCING DETAILS.dwg

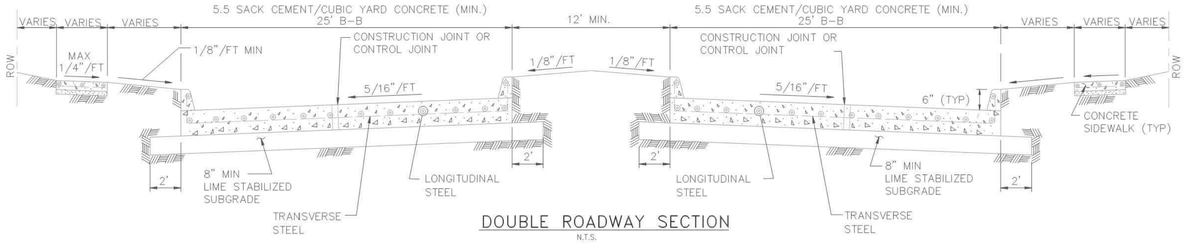

DOUBLE ROADWAY SECTION

N.T.S.

SL-ST-01

CONSTRUCTION NOTES:

1. 6 INCH, 5.5 SACK CEMENT PER CUBIC YARD CONCRETE, 3500 PSI REINFORCED CONCRETE WITH #4 BARS 24 INCHES C-C, E.W. IS THE MINIMUM ACCEPTABLE PAVEMENT CONSTRUCTION FOR LOCAL STREETS

2. 7 INCH, 5.5 SACK CEMENT PER CUBIC YARD CONCRETE, 3500 PSI REINFORCED CONCRETE WITH #4 BARS 18 INCHES C-C, IS THE MINIMUM ACCEPTABLE PAVEMENT CONSTRUCTION FOR COLLECTOR STREETS

3. EIGHT (8) INCH, 5.5 SK, 3500 PSI @ 28 DAYS, REINFORCED WITH #4 18" C.C. EACH WAY IS THE MINIMUM ACCEPTABLE FOR ARTERIAL STREETS.

4. HARD AGGREGATE IS NOT ALLOWED IN STREET PAVEMENT MIX. ADMIXTURES REQUIRE CITY OF SUGAR LAND PUBLIC WORKS DEPARTMENT APPROVAL.

5. TRANSVERSE EXPANSION JOINTS SHALL BE PLACED AT ALL POINTS OF CURVATURE, POINTS OF TANGENCY AND ALL INTERSECTION CURB RETURN POINTS. MAXIMUM SPACING SHALL BE 200' AND BE SEALED WITH SEALANT CONFORMING TO TXDOT ITEM 360 (& ITEM 438) AND TXDOT DMS-6310, CLASS-2.

6. TRANSVERSE CONTROL JOINTS ARE REQUIRED AT MAXIMUM SPACING OF 20'-0" C-C, AND VERTICAL CURB JOINTS TO BE SEALED WITH SPECIAL JOINT SEALANT ASTM-D-1190-74 OR AASHTO-M173-60 FOR PAVEMENT 8" THICK AND GREATER. (ELASTONETRIC TYPE HOT POURED)

7. PAVEMENT FINISH SHALL BE BAKER BROOM FINISH. CURING COMPOUND REQUIRED ON ALL CONCRETE.

8. STORM WATER POLLUTION PROTECTION SHALL BE DESIGNED, CONSTRUCTED, MAINTAINED AND SHALL BE IN TOTAL COMPLIANCE WITH THE STORM QUALITY MANUAL OF THE CITY OF SUGAR LAND, CITY ENGINEER'S APPROVAL.

9. REFER TO GENERAL, C.S.S., AND PAVEMENT NOTES.

10. FOR PAVEMENT WIDTH OF 20-FT AND WIDER, ADD A LONGITUDINAL CONTROL JOINT.

SL-ST-12

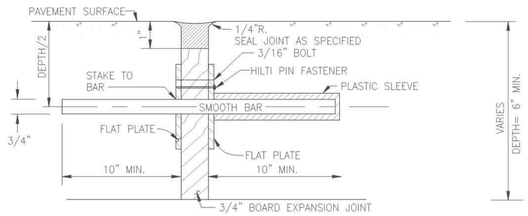

STEEL TO MEET ASTM STD. SPEC. FOR CONC. REBAR UNIT TO BE 24" C.-C., AND 10" MIN.

DOWEL TYPE EXPANSION JOINT

N.T.S.

SL-ST-03

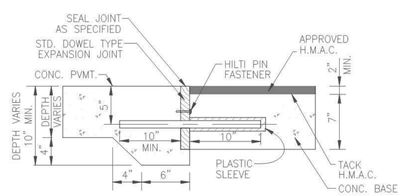

DOWEL TYPE EXPANSION JOINT

N.T.S.

(CONC. PAVING TO CONC. BASE)

SL-ST-06

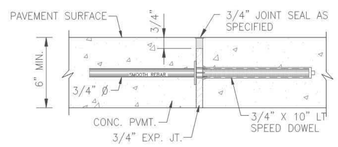

SPEED DOWEL EXPANSION JOINT

N.T.S.

SL-ST-08

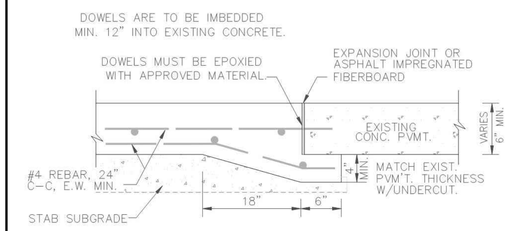

UNDERCUT DETAIL WITH HEADER

N.T.S.

SL-ST-09

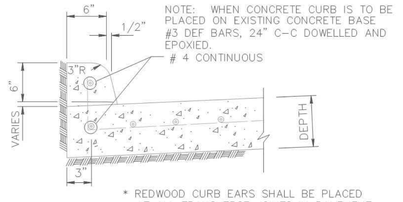

* REDWOOD CURB EARS SHALL BE PLACED AT ALL TRANSVERSE JOINTS IN PAVEMENT.

CONCRETE CURB

N.T.S.

CONSTRUCTION NOTE:

ALL NEW CURB REQUIRES 3,000 P.S.I. @ 28-DAYS.

SL-ST-04

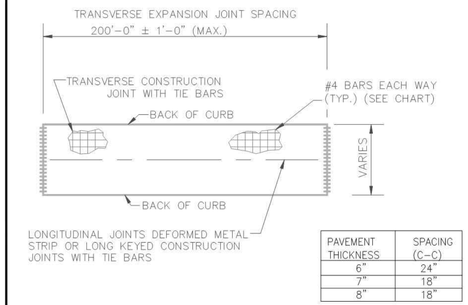

PAVEMENT THICKNESS	SPACING (C-C)
6"	24"
7"	18"
8"	18"

PAVING PANEL

N.T.S.

SL-ST-05

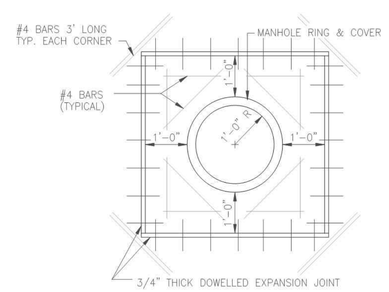

MANHOLE BLOCKOUT

N.T.S.

(STORM & SANITARY) IN PAVEMENT

SL-ST-10

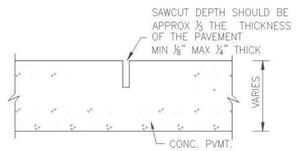

CONTROL JOINT

N.T.S.

SL-ST-11

No.	DATE	REVISION

SEAL:

DESIGN ENGINEER: DATE

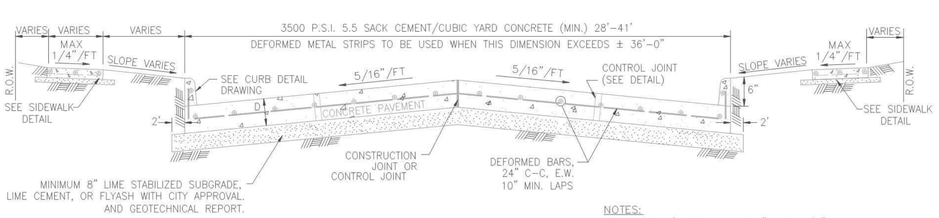

SL-ST-02

SINGLE ROADWAY SECTION

N.T.S.

NOTES:

1. FOR PVM'T DEPTHS OF 6" USE 1/2" DEFORMED BARS, 24" C-C, 10" LAPS. ALL REINFORCING STEEL SHALL CONFORM TO GRADE 60, A.S.T.M. NO. A615. LAP SPLICES TO BE A MINIMUM OF 10 INCHES. STAGGER SPLICES IN ADJACENT BARS.

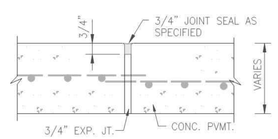

CONSTRUCTION JOINT SEAL

N.T.S.

SL-ST-12

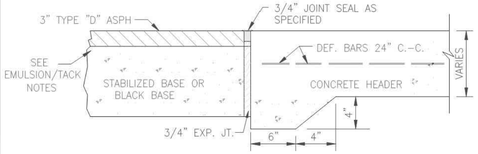

PAVING HEADER

(FOR USE IN CONNECTING CONC. PVMT. TO ASPHALT PVMT.) (PROP. OR EXIST.)

SL-ST-07

CITY OF SUGAR LAND, TEXAS
ENGINEERING DEPARTMENT

CONSTRUCTION PLANS FOR:

CONCRETE PAVEMENT CONSTRUCTION DETAILS I

JOB No.:
DATE:
DESIGNED BY:
DRAWN BY:
CHECKED BY:
SCALE:

SL-21

SHEET OF

PROJECT BENCHMARK

CITY OF SUGAR LAND FLOODPLAIN REFERENCE MONUMENT SGR-RM 006: A BRASS DISK STAMPED "RM 006" SET IN CONCRETE AT THE SOUTHWEST CORNER OF A CONCRETE SLAB FOR A SANITARY SEWER LIFT STATION LOCATED AT THE SOUTH SIDE OF LEXINGTON BLVD. THE POINT IS LOCATED +/- 850 WEST OF THE INTERESECTION OF LEXINGTON BLVD AND AUSTIN PARKWAY.

ELEVATION = 67.85 FEET NAVD88 2001 ADJ.

SURF. COORD. N:13778271.570 & E:3041366.199

SITE TBM1

TBM-FBCLID2_MON3: A BRASS DISK STAMPED "FBCLID2 MON3" SET IN CONCRETE AT PUMP STATION "A". THE POINT IS LOCATED +/- 350 FEET SOUTH OF THE INTERSECTION OF GREYSTONE WAY AND APRIL MEADOWS WAY.

ELEVATION = 79.25 FEET NAVD88 2001 ADJ.

SURF. COORD. N:13774180.945 & E:3037455.324

SITE TBM2

TBM-FBCLID2_MON4: A BRASS DISK STAMPED "FBCLID2 MON4" SET IN CONCRETE AT THE SOUTH SIDE OF THE AUSTIN PARKWAY BRIDGE OVER DITCH "D1".

ELEVATION = 66.90 FEET NAVD88 2001 ADJ.

SURF. COORD. N:13778125.686 & E:3043056.435

SITE TBM3

TBM-FBCLID2_MON6: A BRASS DISK STAMPED "FBCLID2 MON6" SET IN CONCRETE AT THE SOUTH SIDE OF THE AUSTIN PARKWAY BRIDGE OVER DITCH "C".

ELEVATION = 68.82 FEET NAVD88 2001 ADJ.

SURF. COORD. N:13774026.396 & E:3047357.625

NOTES:

RECORD DRAWING

I HEREBY CERTIFY THAT THIS DRAWING REFLECTS THE IMPROVEMENTS CONSTRUCTED AS TO SIZE, LOCATION, AND GRADE; AND THAT THE CONSTRUCTION WAS IN SUBSTANTIAL COMPLIANCE WITH THE CONTRACT DOCUMENTS.

CONTRACTOR: DATE:

TITLE:

DATE	REVISION	BY

FORT BEND COUNTY L.I.D NO. 14

PUMPS STATION UPGRADE AND REPLACEMENT

CIVIL DETAILS 1 OF 5

LJA Engineering, Inc.
1904 W. Grand Parkway North
Suite 100
Katy, Texas 77449
Phone 713.953.5200
Fax 713.953.5026
FRN-F-1386

LJA PROJECT NO.: 1301-1413

DRAWN: N.E. & J.M. DESIGN: DATE: Aug-24

SCALE: N/A

SHEET NO. C12 OF C20

STATE OF TEXAS
CRAIG W. KALKOMEY
105040
LICENSED PROFESSIONAL ENGINEER
08/19/2024

PUMP STATION UPGRADE AND REPLACEMENT - JOB NO. 1301-1413

Date\Time : Wed, 28 Aug 2024 - 3:44pm User Name : jminter
Path\Name : I:\Projdsk1\1301\1413\ACAD_Sheet_Files\12_PSU_CIVIL DETAILS.dwg

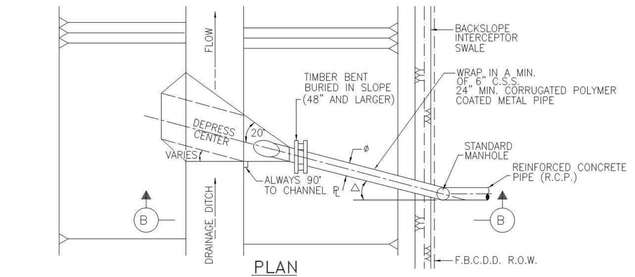

PLAN

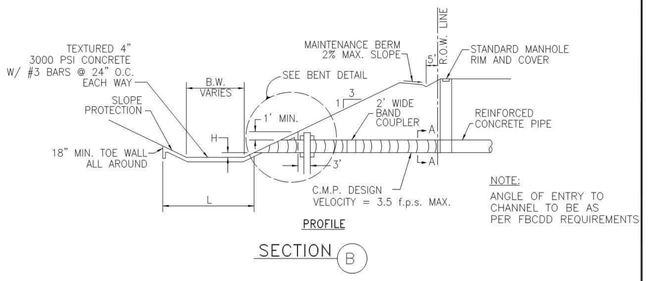

PROFILE

SECTION B

NOTE:
ANGLE OF ENTRY TO CHANNEL TO BE AS PER FBCDD REQUIREMENTS

STORM SEWER OUTFALL

N.T.S.

SL-DR-15

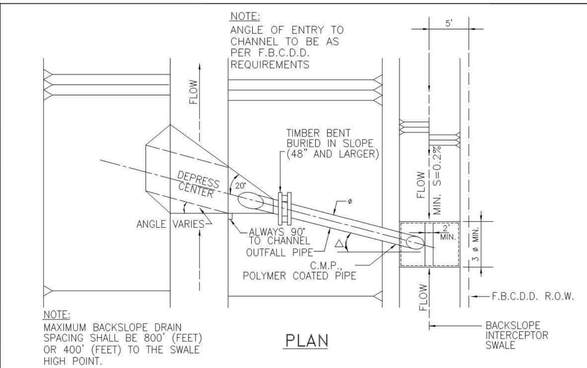

NOTE:
MAXIMUM BACKSLOPE DRAIN SPACING SHALL BE 800' (FEET) OR 400' (FEET) TO THE SWALE HIGH POINT.

PLAN

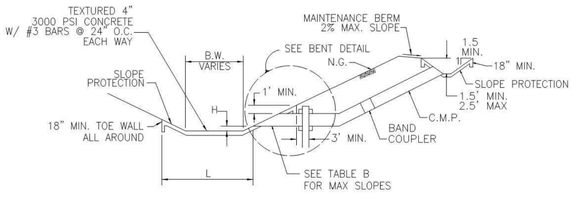

PROFILE

BACKSLOPE INLET & OUTFALL

N.T.S.

SL-DR-16

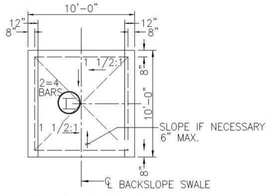

INLET DETAIL

TABLE A

SIZE 2 2/3" X 1/2" CORRUGATION	PIPE GAUGE	BAND COUPLER GAUGE	SIZE 3"X1" & 5"X1" CORRUGATION	PIPE GAUGE	BAND COUPLER GAUGE
24"	12	16			
30"	12	16			
36"	12	16			
42"	12	16			
48"	12	16	48"	16	18
54"	12	14	54"	16	18
60"	12	14	60"	16	18
66"	10	12	66"	16	18
72"	10	12	72"	16	18
78"	8	10	78"	14	16
84"	8	10	84"	14	16

TABLE B

PIPE DIA.	SLOPE	VELOCITY
24"	0.6%	3.25 f.p.s
36"	0.3%	3.00 f.p.s
42"	0.2%	2.75 f.p.s
48"	0.2%	3.00 f.p.s
54"	0.2%	3.25 f.p.s

SL-DR-19

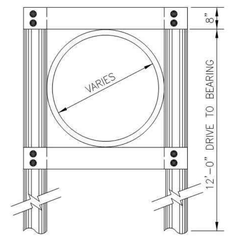

PIPING CUTOFF SUBJECT TO APPROVAL BY CITY
PILING & TIMBER TO BE TREATED WITH AN APPROVED PRESERVATIVE

END VIEW

CONSTRUCTION NOTES:

L : B.W. / PIPE ø ≤ 7'-6" ⇔ LENGTH WILL EXTEND ONE-HALF PIPE ø ABOVE ℄ ON OPPPOSITE BANK (MIN. 36") OR A MINIMUM OF 6-PIPE ø TOWARDS OPPOSITE BANK OF CHANNEL. WHICH EVER IS THE LESSER.

△ : PROP. 24" TO 42" △ = 15°
PROP. 48" AND LARGER △ = 30°

H : FOR PIPE SIZES 24" TO 42"
H=3' MAX. AND 1' MIN.
FOR PIPE SIZES 48" AND LARGER
H=1' MAX. AND MIN.

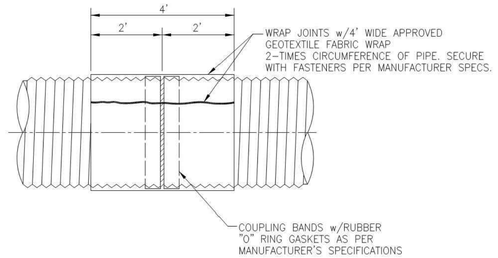

NOTES:

1. ANY PIPE DEFLECTED MORE THAN 2% SHALL BE REJECTED AND REPLACED AT CONTRACTOR'S EXPENSE.
2. INSTALLATION SHALL BE AS PER MANUFACTURER'S RECOMMENDATIONS INCLUDING ITEMS AS DETAILED IN INSTALLATION MANUAL FOR CORRUGATED STEEL DRAINAGE STRUCTURES.

STORM SEWER JOINT WRAP DETAIL

N.T.S.

SL-DR-17

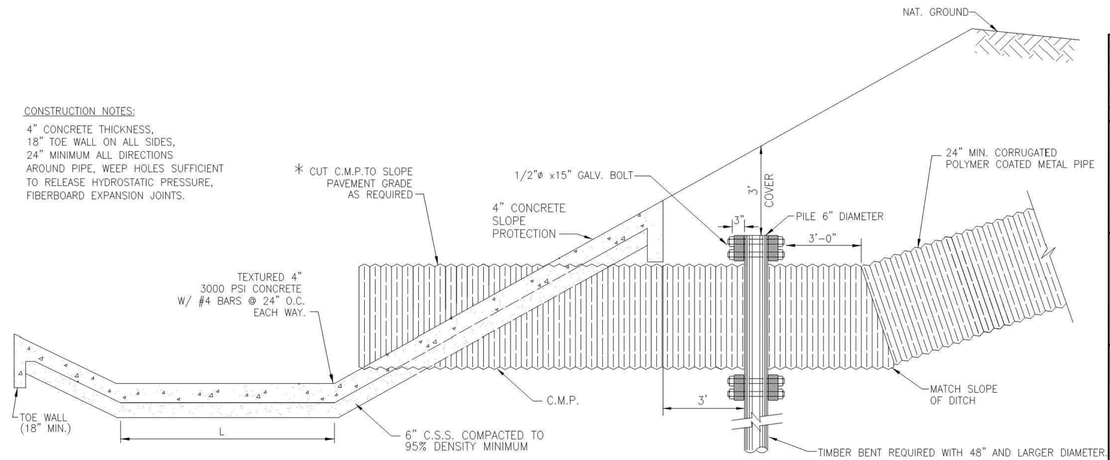

NOTES:

1. OUTFALL PIPE SHALL BE POLYMER-COATED, CORRUGATED, METAL PIPE. ALUMINIMUM PIPE OR ALUMINIZED COAT IS NOT ALLOWED.
2. STONE RIP RAP IS NOT ALLOWED.
3. SEE GENERAL, C.S.S. AND CONCRETE NOTES.
4. SEE END VIEW DETAIL (THIS SHEET).
5. ALL CONNECTING BANDS MUST HAVE AN APPROVED RUBBER GASKET.

PROFILE

TIMBER BENT FOR CORRUGATED METAL PIPE OUTFALL

N.T.S.

SL-DR-18

PROJECT BENCHMARK
CITY OF SUGAR LAND FLOODPLAIN REFERENCE MONUMENT SGR-RM 006: A BRASS DISK STAMPED "RM 006" SET IN CONCRETE AT THE SOUTHWEST CORNER OF A CONCRETE SLAB FOR A SANITARY SEWER LIFT STATION LOCATED AT THE SOUTH SIDE OF LEXINGTON BLVD. THE POINT IS LOCATED +/- 850 WEST OF THE INTERESECTION OF LEXINGTON BLVD AND AUSTIN PARKWAY.

ELEVATION = 67.85 FEET NAVD88 2001 ADJ.

SURF. COORD. N:13778271.570 & E:3041366.199

SITE TBM1
TBM-FBCLID2_MON3: A BRASS DISK STAMPED "FBCLID2 MON3" SET IN CONCRETE AT PUMP STATION "A". THE POINT IS LOCATED +/- 350 FEET SOUTH OF THE INTERSECTION OF GREYSTONE WAY AND APRIL MEADOWS WAY.

ELEVATION = 79.25 FEET NAVD88 2001 ADJ.

SURF. COORD. N:13774180.945 & E:3037455.324

SITE TBM2
TBM-FBCLID2_MON4: A BRASS DISK STAMPED "FBCLID2 MON4" SET IN CONCRETE AT THE SOUTH SIDE OF THE AUSTIN PARKWAY BRIDGE OVER DITCH "D1".

ELEVATION = 66.90 FEET NAVD88 2001 ADJ.

SURF. COORD. N:13778125.686 & E:3043056.435

SITE TBM3
TBM-FBCLID2_MON6: A BRASS DISK STAMPED "FBCLID2 MON6" SET IN CONCRETE AT THE SOUTH SIDE OF THE AUSTIN PARKWAY BRIDGE OVER DITCH "C".

ELEVATION = 68.82 FEET NAVD88 2001 ADJ.

SURF. COORD. N:13774026.396 & E:3047357.625

NOTES:

No.	DATE	REVISION

RECORD DRAWING
I HEREBY CERTIFY THAT THIS DRAWING REFLECTS THE IMPROVEMENTS CONSTRUCTED AS TO SIZE, LOCATION, AND GRADE; AND THAT THE CONSTRUCTION WAS IN SUBSTANTIAL COMPLIANCE WITH THE CONTRACT DOCUMENTS.

CONTRACTOR:_____ DATE:_____

TITLE:_____

SEAL:

_____ DATE _____
DESIGN ENGINEER:

CITY OF SUGAR LAND, TEXAS
ENGINEERING DEPARTMENT

CONSTRUCTION PLANS FOR:

STORM SEWER OUTFALL CONSTRUCTION DETAILS

JOB No.:
DATE:
DESIGNED BY:
DRAWN BY:
CHECKED BY:
SCALE:

SL-06

SHEET OF

DATE	REVISION	BY

FORT BEND COUNTY L.I.D NO. 14

PUMPS STATION UPGRADE AND REPLACEMENT

CIVIL DETAILS 2 OF 5

LJA Engineering, Inc.
1904 W. Grand Parkway North
Suite 100
Katy, Texas 77449
Phone 713.953.5200
Fax 713.953.5026
FRN-F-1386

LJA PROJECT NO.: 1301-1413

DRAWN: N.E. & J.M. DESIGN: _____ DATE: Aug-24

SCALE: N/A

SHEET NO. C13 OF C20

STATE OF TEXAS
CRAIG W. KALKOMEY
105040
LICENSED PROFESSIONAL ENGINEER
08/19/2024

PUMP STATION UPGRADE AND REPLACEMENT - JOB NO. 1301-1413

Date\Time : Wed, 28 Aug 2024 - 3:44pm User Name : jminter
Path\Name : I:\Projdsk1\1301\1413\ACAD_Sheet_Files\2_PSU_CIVIL DETAILS.dwg

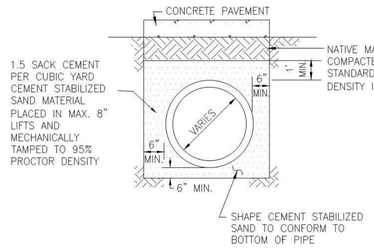

BEDDING DETAIL FOR
CONCRETE CULVERT USED
UNDER ROADWAY PAVEMENT

CLASS "A-A"

N.T.S.

SL-BB-06

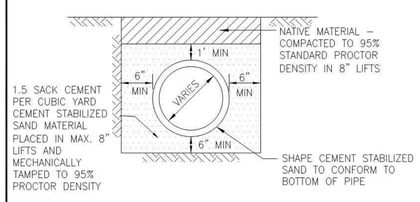

BEDDING DETAIL FOR
REINFORCED CONCRETE PIPE
STORM SEWER
36" DIAMETER & SMALLER

SL-BB-07

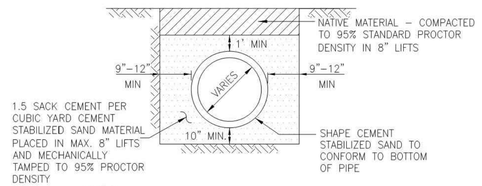

NOTES

1. 1.5-SACK CEMENT PER CUBIC YARD STABILIZED SAND PLACED BEFORE PIPE IS PLACED (10" MINIMUM FOR 42" TO 60", 14" MINIMUM FOR 66" TO 108")

BEDDING DETAIL FOR
REINFORCED CONCRETE PIPE
STORM SEWER
42" TO 108" DIAMETER
WHERE SATISFACTORY SOIL CONDITIONS EXIST

SL-BB-08

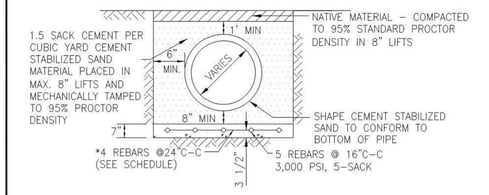

NOTES

1. 1.5-SACK CEMENT PER CUBIC YARD STABILIZED SAND PLACED BEFORE PIPE IS PLACED (8" MINIMUM FOR 42" TO 60", 12" MINIMUM FOR 66" TO 108").

SEAL SLAB
BEDDING DETAIL FOR
REINFORCED CONCRETE PIPE
STORM SEWER
42" TO 108" DIAMETER
WHERE UNSATISFACTORY SOIL CONDITIONS EXIST

SL-BB-09

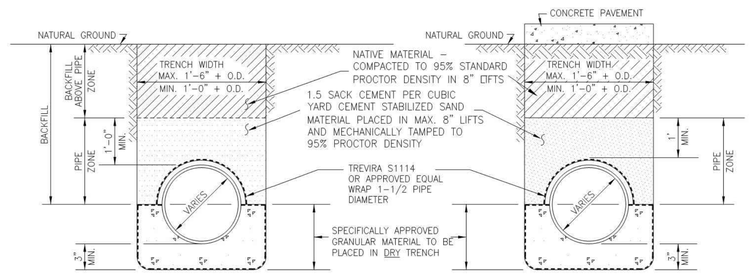

MODIFIED "A"

N.T.S.

MODIFIED "A-A"

N.T.S.

USE FOR SEWERS UNDER EXISTING OR FUTURE ROADS, STREETS, DRIVEWAYS OR OTHER PVM'T.

1. MODOFIED BEDDING TO BE USED IN WET GROUND CONDITIONS FOR NON-COHESIVE MATERIALS WITH A SHEAR STRENGTH LESS THAN 1000 PSI.

SL-BB-10

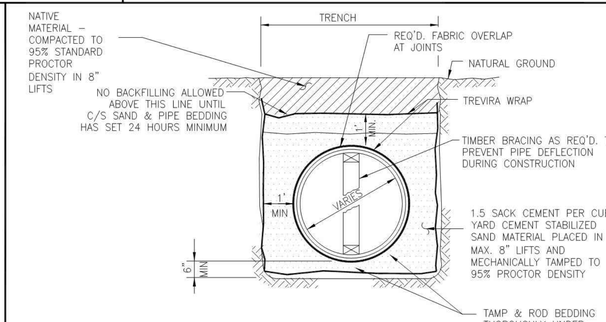

BEDDING DETAIL FOR STORM SEWER-
CORREGATED METAL PIPE

N.T.S.

SL-BB-11

CONSTRUCTION NOTES

1. CONTRACTOR SHALL CONTACT SUGAR LAND ENGINEERING DEPARTMENT IMMEDIATELY IF WET SAND CONDITIONS ARE ENCOUNTERED.
2. SPECIFICALLY APPROVED GRANULAR MATERIAL DIMENSIONS SHOWN ARE TYPICAL BUT MAY BE VARIED BY ORDER OF CITY ENGINEER.
3. SPECIFICALLY APPROVED GRANULAR MATERIAL SHALL BE IN ACCORDANCE WITH TXDOT SPECIFICATION No. 247 FLEXIBLE BASE, TYPE A, GRADE 2 AGGREGATE.
4. NO BEDDING SHALL BE INSTALLED IN WET CONDITIONS. WHEN WELL POINTING OR IN WET SAND CONDITIONS, MAINTAIN GROUND WATER 1' (FT.) BELOW BOTTOM OF TRENCH FOR A MINIMUM OF 24-HRS AFTER BEDDING AND BACKFILL IS IN PLACE.
5. R.C.P. AND BOX CULVERTS SHALL BE INSTALLED WITH APPROVED GASKETS ONLY.
6. MANHOLES SHALL BE PROVIDED WHERE MODIFIED "A" OR MODIFIED "A-A" BEDDING IS USED. STACKS ARE NOT ALLOWED.
7. REFER TO: MANHOLE DETAILS, INLETS, OUTFALL AND END TREATMENT DETAILS, C.S.S., GENERAL NOTES, AND STORM NOTES.
8. SPECIFIC DESIGNS MUST BE SUBMITTED AND APPROVED BY THE CITY ENGINEER FOR MANHOLE ACCESS TO BOX CULVERTS AS REQUIRED.
9. ALL BACKFILL WITHIN THE R.O.W. SHALL BE COMPACTED TO 95% STANDARD PROCTOR DENSITY.
10. A GEOTECHNICAL REPORT MAY BE REQUIRED TO ANALYZE THE BEARING CAPACITY OF EXISTING SOILS AND MAKE A DETERMINATION IF ADDITIONAL BEDDING AND BACKFILL IS APPROPRIATE.

TYPICAL SEAL SLAB
BAR SCHEDULE
(OR AS DIRECTED BY ENGINEER)

PIPE SIZE	LGT LAT #4 BARS	NO LONGIT #5 BARS
42"	5'4"	5
48"	6'8"	6
54"	6'8"	6
60"	8'0"	7
66"	8'0"	7
72"	9'4"	8
78"	9'4"	8
84"	9'4"	8
90"	10'8"	9
96"	10'8"	9
102"	12'0"	10
108"	12'0"	10

SL-BB-15

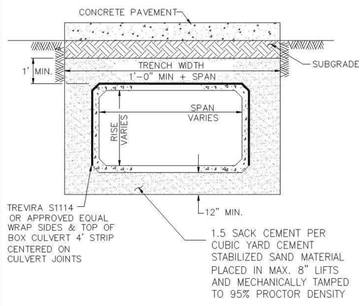

BEDDING DETAIL FOR
REINFORCED CONCRETE BOX
CULVERT UNDER ROADWAY PAVEMENT

NOTES

1. 1.5-SACK CEMENT PER CUBIC YARD STABILIZED SAND PLACED BEFORE PIPE IS PLACED (8" MINIMUM FOR 42" TO 60", 12" MINIMUM FOR 66" TO 108").

SL-BB-12

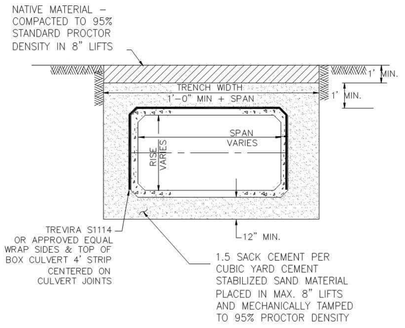

BEDDING DETAIL FOR
REINFORCED CONCRETE BOX
PLACED IN EASEMENT

SL-BB-13

NOTES

1. 1.5-SACK CEMENT PER CUBIC YARD STABILIZED SAND PLACED BEFORE PIPE IS PLACED (8" MINIMUM FOR 42" TO 60", 12" MINIMUM FOR 66" TO 108").

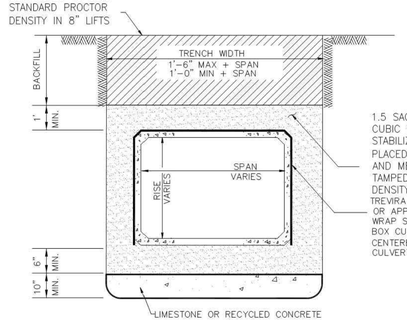

BEDDING DETAIL FOR
REINFORCED CONCRETE BOX CULVERT
W/MODIFIED BEDDING

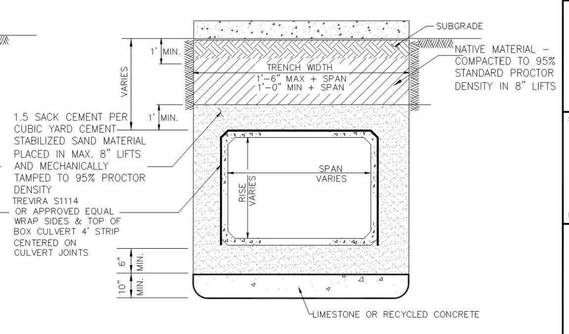

BEDDING DETAIL FOR
REINFORCED CONCRETE BOX CULVERT
W/MODIFIED BEDDING
UNDER ROADWAY PAVEMENT

SL-BB-14

No.	DATE	REVISION

SEAL:

DESIGN ENGINEER: _____ DATE _____

CITY OF SUGAR LAND, TEXAS
ENGINEERING DEPARTMENT

CONSTRUCTION PLANS FOR:

STORM SEWER PIPE BEDDING
AND BACKFILL DETAILS

JOB No.:
DATE:
DESIGNED BY:
DRAWN BY:
CHECKED BY:
SCALE:

SL-20

SHEET OF

PROJECT BENCHMARK

CITY OF SUGAR LAND FLOODPLAIN REFERENCE MONUMENT SGR-RM 006: A BRASS DISK STAMPED "RM 006" SET IN CONCRETE AT THE SOUTHWEST CORNER OF A CONCRETE SLAB FOR A SANITARY SEWER LIFT STATION LOCATED AT THE SOUTH SIDE OF LEXINGTON BLVD. THE POINT IS LOCATED +/- 850 WEST OF THE INTERESECTION OF LEXINGTON BLVD AND AUSTIN PARKWAY.

ELEVATION = 67.85 FEET NAVD88 2001 ADJ.

SURF. COORD. N:13778271.570 & E:3041366.199

SITE TBM1

TBM-FBCLID2_MON3: A BRASS DISK STAMPED "FBCLID2 MON3" SET IN CONCRETE AT PUMP STATION "A". THE POINT IS LOCATED +/- 350 FEET SOUTH OF THE INTERSECTION OF GREYSTONE WAY AND APRIL MEADOWS WAY.

ELEVATION = 79.25 FEET NAVD88 2001 ADJ.

SURF. COORD. N:13774180.945 & E:3037455.324

SITE TBM2

TBM-FBCLID2_MON4: A BRASS DISK STAMPED "FBCLID2 MON4" SET IN CONCRETE AT THE SOUTH SIDE OF THE AUSTIN PARKWAY BRIDGE OVER DITCH "D1".

ELEVATION = 66.90 FEET NAVD88 2001 ADJ.

SURF. COORD. N:13778125.686 & E:3043056.435

SITE TBM3

TBM-FBCLID2_MON6: A BRASS DISK STAMPED "FBCLID2 MON6" SET IN CONCRETE AT THE SOUTH SIDE OF THE AUSTIN PARKWAY BRIDGE OVER DITCH "C".

ELEVATION = 68.82 FEET NAVD88 2001 ADJ.

SURF. COORD. N:13774026.396 & E:3047357.625

NOTES:

RECORD DRAWING

I HEREBY CERTIFY THAT THIS DRAWING REFLECTS THE IMPROVEMENTS CONSTRUCTED AS TO SIZE, LOCATION, AND GRADE; AND THAT THE CONSTRUCTION WAS IN SUBSTANTIAL COMPLIANCE WITH THE CONTRACT DOCUMENTS.

CONTRACTOR: _____ DATE: _____

TITLE: _____

DATE	REVISION	BY

FORT BEND COUNTY L.I.D NO. 14

PUMPS STATION UPGRADE AND REPLACEMENT

CIVIL DETAILS 3 OF 5

LJA Engineering, Inc.
1904 W. Grand Parkway North
Suite 100
Katy, Texas 77449
Phone 713.953.5200
Fax 713.953.5026
FRN-F-1386

LJA PROJECT NO.: 1301-1413

DRAWN: N.E. & J.M. DESIGN: _____ DATE: Aug-24

SCALE: N/A

SHEET NO. C14 OF C20

STATE OF TEXAS
CRAIG W. KALKOMEY
105040
LICENSED
PROFESSIONAL ENGINEER
08/29/2024

PUMP STATION UPGRADE AND REPLACEMENT - JOB NO. 1301-1413

Date\Time : Wed, 28 Aug 2024 - 3:44pm User Name : jminter
Path\Name : I:\Projdat\1301\1413\CADD_Sheet_Files\2_PSU_CIVIL DETAILS.dwg

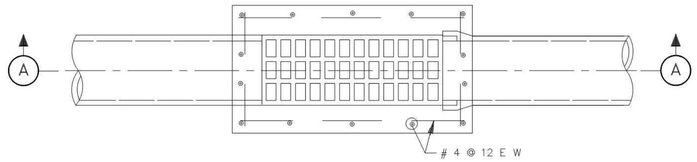

PLAN

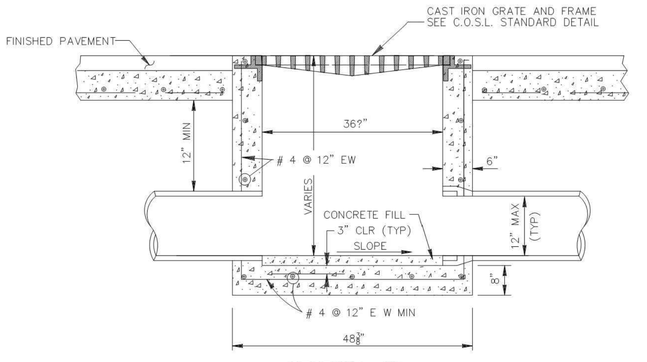

SECTION A

SL-DR-24

TYPE "D" INLET

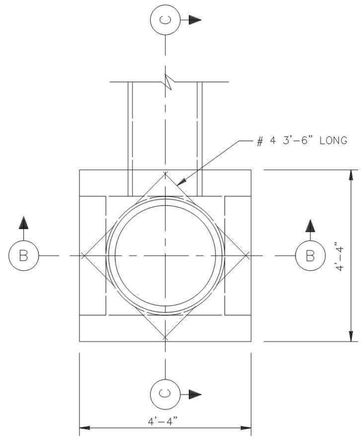

PLAN

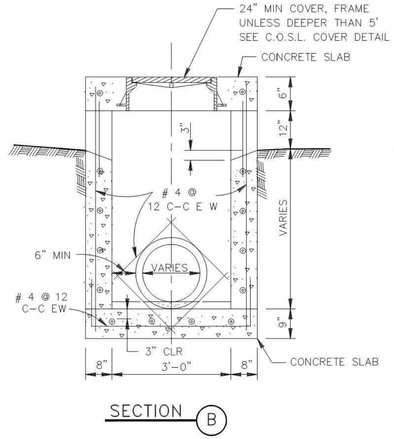

SECTION B

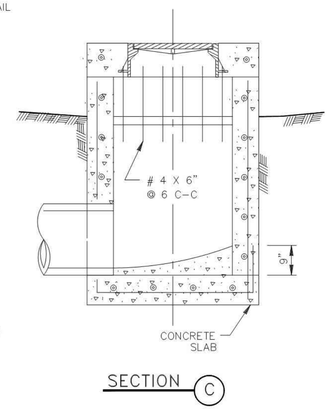

SECTION C

TYPE "E" INLET

N.T.S.

SL-DR-22

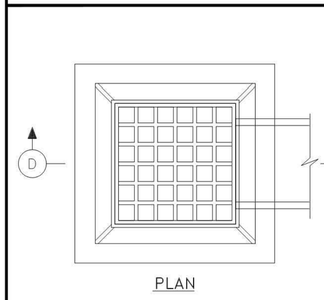

PLAN

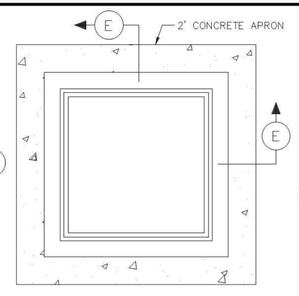

FRAME

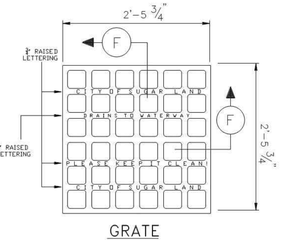

GRATE

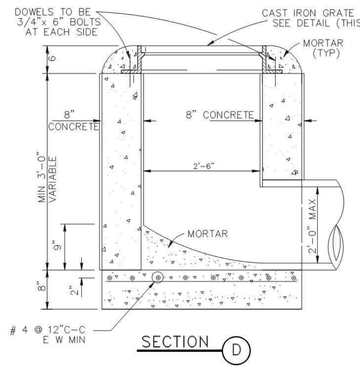

SECTION D

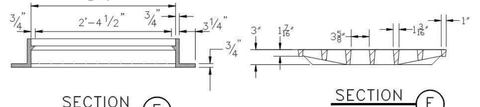

SECTION E

SECTION F

GENERAL CONSTRUCTION NOTES:

1. CONCRETE CAST WALLS SHALL HAVE #4 REBAR PLACED @ 12" C-C EW.
2. GRATE LID IS EAST JORDAN IRON WORKS OR APPROVED EQUAL

SL-DR-23

TYPE "A" INLET

N.T.S.

REFER TO:

1. GENERAL NOTES, C.S.S. & CONCRETE NOTES
2. STORM SEWER NOTES

No.	DATE	REVISION

SEAL:

DESIGN ENGINEER: _____ DATE _____

CITY OF SUGAR LAND, TEXAS
ENGINEERING DEPARTMENT

CONSTRUCTION PLANS FOR:

STORM SEWER INLET CONSTRUCTION DETAILS I

JOB No.:
DATE:
DESIGNED BY:
DRAWN BY:
CHECKED BY:
SCALE:

SL-07

SHEET OF

PROJECT BENCHMARK

CITY OF SUGAR LAND FLOODPLAIN REFERENCE MONUMENT SGR-RM 006: A BRASS DISK STAMPED "RM 006" SET IN CONCRETE AT THE SOUTHWEST CORNER OF A CONCRETE SLAB FOR A SANITARY SEWER LIFT STATION LOCATED AT THE SOUTH SIDE OF LEXINGTON BLVD. THE POINT IS LOCATED +/- 850 WEST OF THE INTERESECTION OF LEXINGTON BLVD AND AUSTIN PARKWAY.

ELEVATION = 67.85 FEET NAVD88 2001 ADJ.

SURF. COORD. N:13778271.570 & E:3041366.199

SITE TBM1

TBM-FBCLID2_MON3: A BRASS DISK STAMPED "FBCLID2 MON3" SET IN CONCRETE AT PUMP STATION "A". THE POINT IS LOCATED +/- 350 FEET SOUTH OF THE INTERSECTION OF GREYSTONE WAY AND APRIL MEADOWS WAY.

ELEVATION = 79.25 FEET NAVD88 2001 ADJ.

SURF. COORD. N:13774180.945 & E:3037455.324

SITE TBM2

TBM-FBCLID2_MON4: A BRASS DISK STAMPED "FBCLID2 MON4" SET IN CONCRETE AT THE SOUTH SIDE OF THE AUSTIN PARKWAY BRIDGE OVER DITCH "D1".

ELEVATION = 66.90 FEET NAVD88 2001 ADJ.

SURF. COORD. N:13778125.686 & E:3043056.435

SITE TBM3

TBM-FBCLID2_MON6: A BRASS DISK STAMPED "FBCLID2 MON6" SET IN CONCRETE AT THE SOUTH SIDE OF THE AUSTIN PARKWAY BRIDGE OVER DITCH "C".

ELEVATION = 68.82 FEET NAVD88 2001 ADJ.

SURF. COORD. N:13774026.396 & E:3047357.625

NOTES:

RECORD DRAWING

I HEREBY CERTIFY THAT THIS DRAWING REFLECTS THE IMPROVEMENTS CONSTRUCTED AS TO SIZE, LOCATION, AND GRADE; AND THAT THE CONSTRUCTION WAS IN SUBSTANTIAL COMPLIANCE WITH THE CONTRACT DOCUMENTS.

CONTRACTOR: _____ DATE: _____

TITLE: _____

DATE	REVISION	BY

FORT BEND COUNTY L.I.D NO. 14

PUMPS STATION UPGRADE AND REPLACEMENT

CIVIL DETAILS 4 OF 5

LJA Engineering, Inc.
1904 W. Grand Parkway North
Suite 100
Katy, Texas 77449
Phone 713.953.5200
Fax 713.953.5026
FRN-F-1386

LJA PROJECT NO.: 1301-1413

DRAWN: N.E. & J.M. DESIGN: _____ DATE: Aug-24

SCALE: N/A

SHEET NO. C15 OF C20

STATE OF TEXAS
CRAIG W. KALKOMEY
105040
LICENSED PROFESSIONAL ENGINEER
05/29/2024

PUMP STATION UPGRADE AND REPLACEMENT - JOB NO. 1301-1413

Date\Time : Wed, 28 Aug 2024 - 3:45pm User Name : jminter
Path\Name : I:\Projdsk\1301\1413\ACAD_Sheet_Files\12_PSU_CIVIL DETAILS.dwg

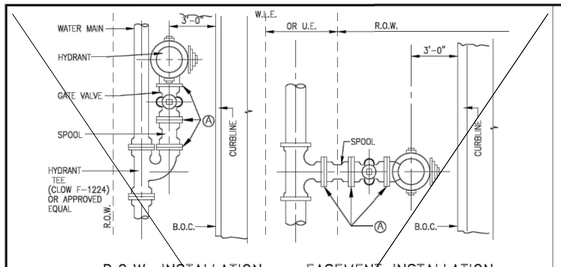

R.O.W. INSTALLATION N.T.S.

EASEMENT INSTALLATION N.T.S.

NOTE:
WHEN WATER LINE IS LOCATED IN EASEMENT, STANDARD TEE MAY BE USED.

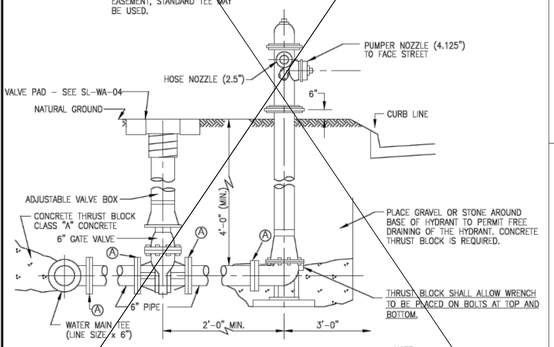

FLUSHING VALVE COLOR CODE

MAIN LINE DIAMETER	BONNET, PUMPER CAP AND STEAMER CAP
6 INCHES (AND LESS)	YELLOW
8 INCHES	WHITE
12 TO 16 INCHES	GREEN
GREATER THAN 16 INCHES	ORANGE

FIRE HYDRANT BODY TO BE PAINTED GEO-GLEN 301 BRIGHT SILVER ALUMINUM POLYURETHANE ENAMEL, BY GEO-GLEN ENTERPRISES OR APPROVED EQUAL.

NOTE:
ALL FIRE HYDRANTS SHALL BE MUELLER, KENNEDY, AMERICAN, M & H OR APPROVED EQUAL WITH PUMPER NOZZLE SIZE 4.125" HOSE NOZZLE SIZE 2.5" N.S.T.

ALL FLUSHING VALVES TO BE SAND BLASTED AND PAINTED AS PER C.O.S.L. DESIGN STANDARDS.

Ⓐ =RESTRAINED JOINT

TYPICAL GATE & FIRE HYDRANT INSTALLATION N.T.S.

SL-WA-01

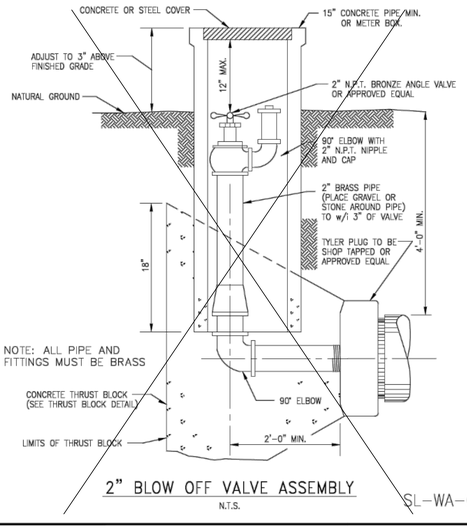

2" BLOW OFF VALVE ASSEMBLY N.T.S.

SL-WA-02

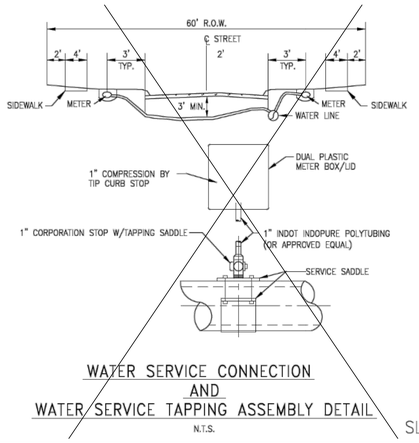

WATER SERVICE CONNECTION AND WATER/SERVICE TAPPING ASSEMBLY DETAIL N.T.S.

SL-WA-03

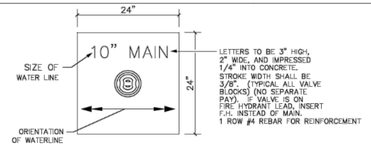

CONCRETE PAD N.T.S.

NOTE: ALL VALVES MUST HAVE CONCRETE PAD

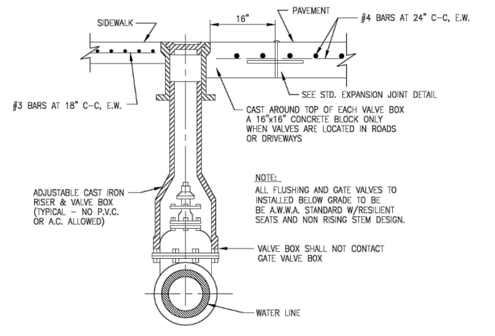

NOTE:
ALL FLUSHING AND GATE VALVES TO INSTALLED BELOW GRADE TO BE BE A.W.W.A. STANDARD W/RESILIENT SEATS AND NON RISING STEM DESIGN.

VALVE BOX INSTALLATION DETAIL N.T.S.

SL-WA-04

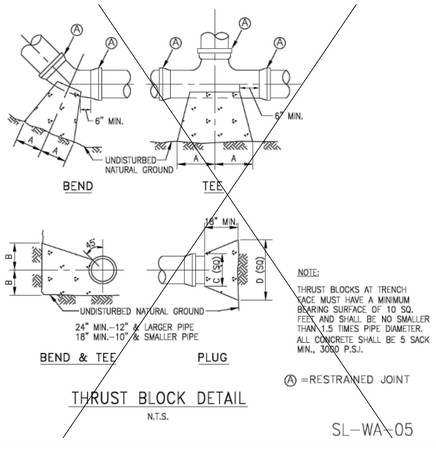

NOTE:
THRUST BLOCKS AT TRENCH FACE MUST HAVE A MINIMUM BEARING SURFACE OF 10 SQ. FEET AND SHALL BE NO SMALLER THAN 1.5 TIMES PIPE DIAMETER. ALL CONCRETE SHALL BE 5 SACK MIN., 3000 P.S.I.

Ⓐ =RESTRAINED JOINT

THRUST BLOCK DETAIL N.T.S.

SL-WA-05

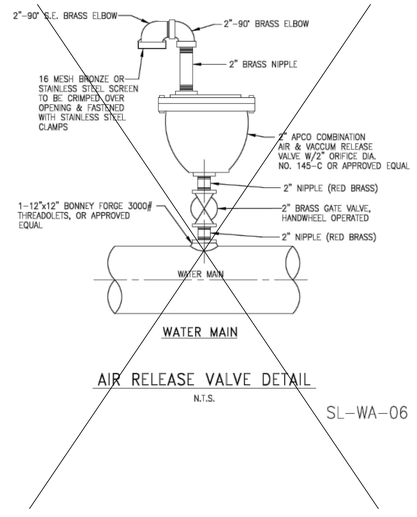

WATER MAIN

AIR RELEASE VALVE DETAIL N.T.S.

SL-WA-06

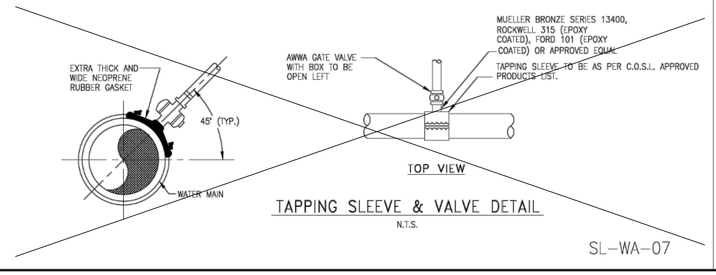

TAPPING SLEEVE & VALVE DETAIL N.T.S.

SL-WA-07

CONSTRUCTION NOTES:

1. WATER LINES 12" (IN.) AND LESS SHALL BE AWWA C-900 DR18 WATER LINE GREATER THAN 12" (IN.) IN ø SHALL BE AWWA C-905 DR 18
2. ALL FLUSHING VALVES AND GATE VALVES TO BE AMERICAN WATER WORKS ASSOC. (AWWA) STANDARD COUNTERCLOCKWISE OPENING WITH NON-RISING STEM DESIGN.
3. ALL DUCTILE IRON PIPE SHALL BE CLASS 50 MORTAR LINED. NO A.C. PIPE WILL BE ALLOWED AND ALL DUCTILE IRON FITTINGS SHALL BE MORTAR LINED PUSHON OR MECHANICAL JOINTS.
4. ALL BACKFILL WITHIN THE R.O.W. SHALL BE COMPACTED TO 95% STANDARD PROCTOR DENSITY.
5. MINIMUM SPACING BETWEEN TAPS SHALL BE 2' AT ALTERNATING TAP ANGLES.

SL-WA-08

NOTES: POLYETHYLENE WRAP FOR IRON PIPE

NOTE:

1. POLYETHYLENE FILM SHALL BE USED AS A WRAP TO PROTECT CAST IRON AND OTHER METALS IN A CORROSIVE SOIL ENVIRONMENT.
2. AN 8 MIL POLYETHYLENE FILM WRAP SHALL BE REQUIRED AROUND ALL METAL PIPE AND APPURTENANCES (EXCEPT FIRE HYDRANTS).
3. POLYETHYLENE FILM SHALL BE FURNISHED AND INSTALLED EITHER IN TUBULAR FORM PRIOR TO LOWERING THE PIPE IN TRENCH OR IN SHEET FORM.
4. POLYETHYLENE TUBE ENCASEMENT SHALL CONFORM WITH THE MINIMUM REQUIREMENTS OF "POLYETHYLENE ENCASEMENT FOR GRAY AND DUCTILE CAST-IRON PIPING FOR WATER AND OTHER LIQUIDS", ANSI/AWWA C105, CURRENT REVISION. SOILS WITHIN A PROJECT SHALL BE TESTED IN ACCORDANCE WITH APPENDIX A OF ANSI/AWWA C105 TO ADEQUATELY DETERMINE THE REQUIREMENTS FOR ENCASEMENT.
5. ALL FITTINGS AND PIPE JOINTS WITHIN 10' OF A FITTING SHALL HAVE RESTRAINT JOINTS

SIZE	90° BEND		45° BEND		22 1/2° BEND		TEES		PLUGS	
	A	B	A	B	A	B	A	B	A	B
2 1/2"	12"	7"	6"	7"	6"	6"	7"	8"	8"	14"
6"	16"	10"	9"	10"	6"	12"	10"	12"	10"	21"
8"	22"	13"	12"	13"	8"	10"	13"	16"	12"	29"
10"	26"	17"	14"	17"	10"	13"	16"	20"	14"	36"
12"	29"	21"	16"	21"	11"	16"	18"	24"	16"	41"
14"	35"	24"	19"	24"	12"	20"	22"	27"	18"	48"
16"	38"	27"	21"	27"	12"	24"	24"	30"	20"	54"
20"	50"	40"	30"	40"	18"	30"	30"	40"	30"	*78"
24"	50"	40"	30"	40"	18"	30"	30"	40"	30"	*78"
30"	60"	48"	36"	48"	20"	36"	36"	48"	36"	*96"

BENDS, TEES & PLUGS FOR PIPE OF VARIOUS SIZES

SL-WA-08

No.	DATE	REVISION

SEAL:

DESIGN ENGINEER: DATE

CITY OF SUGAR LAND, TEXAS
ENGINEERING DEPARTMENT

CONSTRUCTION PLANS FOR:

WATER LINE CONSTRUCTION DETAILS

JOB No.:
DATE:
DESIGNED BY:
DRAWN BY:
CHECKED BY:
SCALE:

SL-15

SHEET OF

PROJECT BENCHMARK
CITY OF SUGAR LAND FLOODPLAIN REFERENCE MONUMENT SGR-RM 006: A BRASS DISK STAMPED "RM 006" SET IN CONCRETE AT THE SOUTHWEST CORNER OF A CONCRETE SLAB FOR A SANITARY SEWER LIFT STATION LOCATED AT THE SOUTH SIDE OF LEXINGTON BLVD. THE POINT IS LOCATED +/- 850 WEST OF THE INTERESECTION OF LEXINGTON BLVD AND AUSTIN PARKWAY.

ELEVATION = 67.85 FEET NAVD88 2001 ADJ.

SURF. COORD. N:13778271.570 & E:3041366.199

SITE TBM1
TBM-FBCLID2_MON3: A BRASS DISK STAMPED "FBCLID2 MON3" SET IN CONCRETE AT PUMP STATION "A". THE POINT IS LOCATED +/- 350 FEET SOUTH OF THE INTERSECTION OF GREYSTONE WAY AND APRIL MEADOWS WAY.

ELEVATION = 79.25 FEET NAVD88 2001 ADJ.

SURF. COORD. N:13774180.945 & E:3037455.324

SITE TBM2
TBM-FBCLID2_MON4: A BRASS DISK STAMPED "FBCLID2 MON4" SET IN CONCRETE AT THE SOUTH SIDE OF THE AUSTIN PARKWAY BRIDGE OVER DITCH "D1".

ELEVATION = 66.90 FEET NAVD88 2001 ADJ.

SURF. COORD. N:13778125.686 & E:3043056.435

SITE TBM3
TBM-FBCLID2_MON6: A BRASS DISK STAMPED "FBCLID2 MON6" SET IN CONCRETE AT THE SOUTH SIDE OF THE AUSTIN PARKWAY BRIDGE OVER DITCH "C".

ELEVATION = 68.82 FEET NAVD88 2001 ADJ.

SURF. COORD. N:13774026.396 & E:3047357.625

NOTES:

RECORD DRAWING
I HEREBY CERTIFY THAT THIS DRAWING REFLECTS THE IMPROVEMENTS CONSTRUCTED AS TO SIZE, LOCATION, AND GRADE; AND THAT THE CONSTRUCTION WAS IN SUBSTANTIAL COMPLIANCE WITH THE CONTRACT DOCUMENTS.

CONTRACTOR:_____ DATE:_____

TITLE:_____

DATE	REVISION	BY

FORT BEND COUNTY L.I.D NO. 14

PUMPS STATION UPGRADE AND REPLACEMENT

CIVIL DETAILS 5 OF 5

LJA Engineering, Inc.
1904 W. Grand Parkway North
Suite 100
Katy, Texas 77449
Phone 713.953.5200
Fax 713.953.5026
FRN-F-1386

LJA PROJECT NO.: 1301-1413

DRAWN: N.E. & J.M. DESIGN: DATE: Aug-24

SCALE: N/A

SHEET NO. C16 OF C20

STATE OF TEXAS · CRAIG W. KALKOMEY · 105040 · LICENSED PROFESSIONAL ENGINEER · 08/29/2024

PUMP STATION UPGRADE AND REPLACEMENT – JOB NO. 1301-1413

REVISION DATE: OCTOBER 2021

Date\Time : Wed, 28 Aug 2024 - 3:45pm User Name : jminter
Path\Name : I:\Projdesk\1301\1413\ACAD_Sheet_Files\12_PSU_CIVIL DETAILS.dwg

HYPER–CHLORINATED WATER NOTES

1. HYPER–CHLORINATED WATER SHALL NOT BE DISCHARGED TO THE STORM SEWER OR DRAINAGE SYSTEM UNLESS THE CHLORINE CONCENTRATION IS REDUCED TO 4 PPM OR LESS BY CHEMICALLY TREATING THE DECHLORINATE OR BY ONSITE RETENTION UNTIL NATURAL ATTENUATION OCCURS.
2. DISCHARGE OF HIGH FLOW RATE AND VELOCITIES SHALL BE DIRECTED TO VELOCITY DISSIPATION DEVICES.
3. CHLORINE CAN BURN VEGETATION, SO IT SHOULD NOT BE USED TO WATER VEGETATION THAT IS BEING USED FOR STABILIZATION, VEGETATED FILTERS OR BUFFERS, OR OTHER VEGETATION TO BE PRESERVED.
4. HYPER–CHLORINATED WATER MAY BE DISCHARGED TO AN ONSITE RETENTION AREA UNTIL NATURAL ATTENUATION OCCURS. THE AREA MAY BE A DRY STORMWATER RETENTION BASIN, OR A PORTION OF THE SITE MAY BE GRADED TO FORM A TEMPORARY PIT OR BERMED AREA.
5. NATURAL ATTENUATION OF THE CHLORINE MAY BE AIDED BY AERATION. AIR CAN BE ADDED TO THE WATER BY DIRECTING THE DISCHARGE OVER A ROUGH SURFACE BEFORE IT ENTERS THE TEMPORARY RETENTION AREA OR AN AERATION DEVICE CAN BE PLACED IN THE RETENTION AREA.
6. ONSITE DISCHARGE MAY REQUIRE SEVERAL HOURS TO A FEW DAYS BEFORE THE WATER IS SAFE TO DISCHARGE. THE RATE AT WHICH CHLORINE WILL ATTENUATE IS AFFECTED BY SOIL CONDITIONS AND WEATHER CONDITIONS. ATTENUATION WILL OCCUR QUICKEST DURING WARM, SUNNY, AND DRY PERIODS.

SANITARY WASTE NOTES

1. THE CONTRACTOR SHALL PROVIDE AN APPROPRIATE NUMBER OF PORTABLE TOILETS BASED ON THE NUMBER OF EMPLOYEES USING THE TOILETS AND THE HOURS THEY WILL WORK.
2. SANITARY FACILITIES SHALL BE PLACED ON A MINIMUM OF 50 FEET AWAY FROM STORM DRAIN INLETS, CONVEYANCE, CHANNELS OR SURFACE WATERS. IF UNABLE TO MEET THE 50 FOOT REQUIREMENT DUE TO SITE CONFIGURATION, PORTABLE TOILETS SHALL BE A MINIMUM OF 20 FEET AWAY FROM STORM DRAIN INLETS, CONVEYANCE CHANNELS OR SURFACE WATER AND SECONDARY CONTAINMENT SHALL BE PROVIDE IN CASE OF SPILLS.
3. THE LOCATION OF THE PORTABLE TOILETS SHALL BE ACCESSIBLE TO MAINTENANCE TRUCKS WITHOUT DAMAGING EROSION AND SEDIMENT CONTROLS OR CAUSING EROSION OR TRACKING PROBLEMS.
4. SANITARY FACILITIES SHALL BE FULLY ENCLOSED AND DESIGNED IN A MANNER THAT MINIMIZES THE EXPOSURE OF SANITARY WASTE TO PRECIPITATION AND STORMWATER RUNOFF.
5. WHEN HIGH WINDS ARE EXPECTED, PORTABLE TOILETS SHALL BE ANCHORED OR OTHERWISE SECURED TO PREVENT THEM FROM BEING BLOWN OVER.
6. THE COMPANY THAT SUPPLIES AND MAINTAINS THE PORTABLE TOILETS SHALL BE NOTIFIED IMMEDIATELY IF A TOILET IS TIPPED OVER OR DAMAGED IN A WAY THAT THE RESULTS IN A DISCHARGE. DISCHARGED SOLID MATTER SHALL BE VACUUMED INTO A SEPTIC TRUCK BY THE COMPANY THAT MAINTAINS THE TOILETS.
7. THE OPERATOR OF THE MUNICIPAL SEPARATE STORM SEWER SYSTEM (MS4) SHALL BE NOTIFIED IF A DISCHARGE FROM THE PORTABLE TOILETS ENTERS THE MS4 OR A NATURAL CHANNEL.
8. SANITARY FACILITIES SHALL NOT BE PERMITTED ON PUBLIC SIDEWALKS, STREETS OR INLETS.

DEBRIS AND TRASH NOTES

1. ALL WASTE SOURCES AND STORAGE AREAS SHALL BE LOCATED A MINIMUM OF 50 FEET AWAY FROM INLETS, SWALES, DRAINAGE WAYS, CHANNELS AND OTHER WATERS, IF THE SITE CONFIGURATION PROVIDES SUFFICIENT SPACE TO DO SO. IN NO CASE SHALL MATERIAL AND WASTE SOURCES BE CLOSER THAN 20 FROM INLETS, SWALES, DRAINAGE WAYS, CHANNELS, AND OTHER WATERS.
2. CONSTRUCTION WASTE AND TRASH SHALL BE STORED IN A MANNER THAT MINIMIZES ITS EXPOSURE TO PRECIPITATION AND STORMWATER RUNOFF.
3. WHENEVER POSSIBLE, MINIMIZE PRODUCTION OF DEBRIS AND TRASH.
4. INSTRUCT CONSTRUCTION WORKERS IN PROPER DEBRIS AND TRASH STORAGE AND HANDLING PROCEDURES.
5. SEGREGATE POTENTIAL HAZARDOUS WASTE FROM NON–HAZARDOUS CONSTRUCTION SITE DEBRIS.
6. PROHIBIT LITTERING BY WORKERS AND VISITORS.
7. POLICE SITE DAILY FOR LITTER AND DEBRIS.
8. ENFORCE SOLID WASTE HANDLING AND STORAGE PROCEDURES.
9. IF FEASIBLE, RECYCLE CONSTRUCTION AND DEMOLITION DEBRIS SUCH AS WOOD, METAL, AND CONCRETE.
10. TRASH AND DEBRIS SHALL BE REMOVED FROM THE SITE AT REGULAR INTERVALS THAT ARE SCHEDULED TO EMPTY CONTAINERS WHEN THEY ARE 90 PERCENT FULL OR MORE FREQUENTLY.
11. GENERAL CONSTRUCTION DEBRIS MAY BE HAULED TO A LICENSED CONSTRUCTION DEBRIS LANDFILL
12. USE WASTE AND RECYCLING HAULERS/FACILITIES APPROVED BY THE LOCAL MUNICIPALITY.
13. CHIPPING OF TREES AND BRUSH FOR USE SUCH AS MULCH IS PREFERRED ALTERNATIVE TO OFFSITE DISPOSAL.
14. NO WASTE, TRASH, OR DEBRIS SHALL BE BURIED, BURNED OR OTHER WISE DISPOSED OF ONSITE.
15. CLEARLY MARK ON ALL DEBRIS AND TRASH CONTAINERS WHICH MATERIALS ARE ACCEPTABLE. FOREMAN AND/OR CONSTRUCTION SUPERVISOR SHALL MONITOR ONSITE SOLID WASTE STORAGE AND DISPOSAL PROCEDURES DAILY.

CONCRETE SAWCUTTING WASTE NOTES

1. DURING SAWCUTTING OPERATIONS, THE SLURRY AND CUTTINGS SHALL BE CONTINUOUSLY VACUUMED OR OTHERWISE RECOVERED AND NOT BE ALLOWED TO DISCHARGE FROM THE SITE.
2. IF THE PAVEMENT TO BE CUT IS NEAR A STORM DRAIN INLET, THE INLET SHALL BE BLOCKED BY SANDBAGS OR EQUIVALENT TEMPORARY MEASURES TO PREVENT THE SLURRY FROM ENTERING THE INLET. REMOVE THE SANDBAGS IMMEDIATELY AFTER COMPLETING SAWCUTTING OPERATIONS, SO THEY DO NOT CAUSE DRAINAGE PROBLEMS DURING STORM EVENTS.
3. SLURRY AND CUTTINGS SHALL NOT BE ALLOWED TO REMAIN ON THE PAVEMENT TO DRY OUT
4. DEVELOP PRE–DETERMINED, SAFE SLURRY DISPOSAL AREAS.
5. COLLECTED SLURRY AND CUTTINGS SHOULD BE IMMEDIATELY HAULED FROM THE SITE FOR DISPOSAL AT A WASTE FACILITY. IF THIS IS NOT POSSIBLE, THE SLURRY AND CUTTINGS SHALL BE DISCHARGED INTO ONSITE CONTAINMENT.
6. THE ONSITE CONTAINMENT MAY BE EXCAVATED OR BERMED PIT LINED WITH PLASTIC MINIMUM OF 10 MILIMETERS THICK. IF THE PROJECT INCLUDES PLACEMENT OF NEW CONCRETE, SLURRY FROM SAWCUTTING MAY BE DISPOSED OF IN FACILITIES DESIGNATED FOR THE WASHOUT OF CONCRETE TRUCKS INSTEAD CONSTRUCTING A SEPARATE CONTAINMENT.
7. THE CONTAINMENT SHALL BE LOCATED A MINIMUM OF 50 FEET AWAY FROM INLETS, SWALES, DRAINAGE WAYS, CHANNELS, AND OTHER WATERS, IF THE SITE CONFIGURATION PROVIDES SUFFICIENT SPACE TO DO SO. IN NO CASE SHALL THE COLLECTION AREA BE CLOSER THAN 20 FEET FROM INLETS, SWALES, DRAINAGE WAYS, CHANNELS AND OTHER WATERS.
8. SEVERAL, PORTABLE, PRE–FABRICATED, CONCRETE WASHOUT, COLLECTION BASINS ARE COMMERCIALLY AVAILABLE AND ARE AN ACCEPTABLE ALTERNATIVE TO AN ONSITE CONTAINMENT PIT.
9. REMOVE WASTER CONCRETE WHEN THE CONTAINMENT IS HALF FULL. ALWAYS MAINTAIN A MINIMUM OF ONE FOOT FREEBOARD.
10. ONSITE EVAPORATION OF SLURRY WATER AND RECYCLING OF THE CONCRETE WASTE IS THE PREFERRED DISPOSAL METHOD. WHEN THIS IS NOT FEASIBLE, DISCHARGE FROM THE COLLECTION AREA SHALL ONLY BE ALLOWED IF A PASSIVE TREATMENT SYSTEM IS USED TO REMOVE THE FINES. MECHANICAL MIXING IS REQUIRED IN THE COLLECTION AREA. THE pH MUST BE TESTED, AND DISCHARGED IS ALLOWED IN IF THE pH DOES NOT EXCEED 8.0. THE pH MAY BE LOWERED BY ADDING SULFURIC ACID TO THE SLURRY WATER.
11. CARE SHALL BE EXERCISED WHEN TREATING THE SLURRY WATER FOR DISCHARGE. MONITORING MUST BE IMPLEMENTED TO VERIFY THAT DISCHARGES FROM THE COLLECTION AREA DO NOT VIOLATE GROUNDWATER OR SURFACE WATER QUALITY STANDARDS.
12. GEOTEXTILE FABRICS SUCH AS THOSE USED FOR SILT FENCE SHOULD NOT BE USED TO CONTROL SAWCUTTING WASTE, SINCE THE GRAIN SIZE IS SIGNIFICANTLY SMALLER THAN THE APPARENT OPENING SIZE OF THE FABRIC.

SPILL AND LEAK RESPONSE NOTES

1. RECORDS OF RELEASES THAT EXCEED THE REPORTABLE QUANTITY (RQ) FOR OIL AND HAZARDOUS SUBSTANCES SHOULD BE MAINTAINED IN ACCORDANCE WITH THE FEDRAL AND STATE REGULATIONS.
2. EMERGENCY CONTACT INFORMATION AND SPILL RESPONSE PROCEDURES SHALL BE POSTED IN A READILY AVAILABLE REA FOR ACCESS BY ALL EMPLOYEES AND SUBCONTRACTORS.
3. SPILL CONTAINMENT KITS SHOULD BE MAINTAINED FOR PETROLEUM PRODUCTS AND OTHER CHEMICALS THAT ARE REGULARLY ONSITE. MATERIALS IN KITS SHOULD BE BASED ON CONTAINMENT GUIDELINES IN THE MATERIALS SAFETY AND DATA SHEETS (MSDSS) FOR THE SUBSTANCE MOST FREQUENTLY ONSITE.
4. SPILL KITS ARE INTENDED FOR RESPONSE TO SMALL SPILLS, TYPICALLY LESS THAN 5 CALLONS, OF SUBSTANCES THAT ARE NOT EXTREMELY HAZARDOUS.
5. SIGNIFICANT SPILLS OR OTHER RELEASES WARRANT IMMEDIATE RESPONSE BY TRAINED PROFESSIONALS.
6. SUSPECTED JOB–SITE CONTAMINATION SHOULD BE IMMEDIATELY REPORTED TO REGULATORY AUTHORITIES AND PROTECTIVE ACTIONS TAKEN.
7. THE CONTRACTOR SHOULD BE REQUIRED TO DESIGNATE A SITE SUPERINTENDENT, FOREMAN, SAFETY OFFICER, OR OTHER SENIOR PERSON WHO IS ONSITE DAILY TO BE THE SPILL AND LEAK RESPONSE COORDINATOR (SLRC) AND MUST HAVE KNOWLEDGE OF AND BE TRAINED IN CORRECT SPILL AND LEAK RESPONSE PROCEDURES.

SUBGRADE STABILIZATION NOTES

1. MINIMIZE THE DISCHARGE OF THE CHEMICAL STABILIZERS BY THE CONTRACTOR LIMITING THE AMOUNT OF STABILIZING AGENT ONSITE TO THAT WHICH CAN BE THOROUGHLY MIXED AND COMPACTED BY THE END OF EACH WORKDAY.
2. STABILIZERS SHALL BE APPLIED AT RATES THAT RESULT IN NO RUN OFF.
3. STABILIZATION SHALL NOT OCCUR IMMEDIATELY BEFORE AND DURING RAINFALL EVENTS.
4. NO TRAFFIC OTHER THAN WATER TRUCKS AND MIXING EQUIPMENT SHALL BE ALLOWED TO PASS OVER THE AREA BEING STABILIZED UNTIL AFTER COMPLETION OF MIXING THE CHEMICAL.
5. AREA ADJACENT AND DOWNSTREAM OF STABILIZED AREAS SHALL BE ROUGHENED TO INTERCEPT CHEMICAL RUNOFF AND REDUCE RUNOFF VELOCITY.
6. GEOTEXTILE FABRICS SUCH AS THOSE USED FOR SILT FENCE SHOULD NOT BE USED TO TREAT CHEMICAL RUNOFF, BECAUSE THE CHEMICALS ARE DISSOLVED IN THE WATER AND WON'T BE AFFECTED BY A BARRIER AND THE SUSPENDED SOLIDS ARE SIGNIFICANTLY SMALLER THAN THE APPARENT OPENING SIZE OF THE FABRIC.
7. IF SOIL STABILIZERS ARE STORED ONSITE, THEY SHALL BE CONSIDERED HAZARDOUS MATERIAL AND SHALL BE MANAGED ACCORDING TO THE CRITERIA OF CHEMICAL MANAGEMENT TO CAPTURE ANY ACCIDENTAL LIME OR CHEMICAL OVERFLOW.
8. THE CONTRACRTOR SHALL INSTALL BMP'S TO ALL INLETS AND OPENINGS CONNECTED TO THE STORM SEWER SYSTEMS TO PREVENT LIME FROM ENTERING THE MS4 SYSTEM.

SANDBLASTING WASTE NOTES

1. THE CONTRACTOR SHOULD BE REQUIRED TO DESIGNATE THE SITE SUPERINTENDENT, FOREMAN, OR OTHER PERSON WHO IS RESPONSIBLE FOR SANDBLASTING TO ALSO BE RESPONSIBLE FOR SANDBLASTING WASTE MANAGEMENT.
2. PROHIBIT THE DISCHARGE OF SANDBLASTING WASTE.
3. USE ONLY INERT, NON–DEGRADABLE SANDBLAST MEDIA.
4. USE APPROPRIATE EQUIPMENT FOR THE JOB; DO NOT OVER–BLAST.
5. WHENEVER POSSIBLE, BLAST IN A DOWNWARD DIRECTION.
6. CEASE BLASTING ACTIVITIES IN HIGH WINDS OR IF WIND DIRECTION COULD TRANSPORT GRIT TO DRAINAGE FACILITIES.
7. INSTALL DUST SHIELDING AROUND SANDBLASTING AREAS.
8. COLLECT AND DISPOSE OF ALL SPENT SANDBLAST GRIT, USE DUST CONTAINMENT FABRICS AND DUST COLLECTION HOPPERS AND BARRELS.
9. NON–HAZARDOUS SANDBLAST GRIT MAY BE DISPOSED IN PERMITTED CONSTRUCTION DEBRIS LANDFILLS OR PERMITTED SANITARY LANDFILLS.
10. IF SANDBLAST MEDIA CANNOT BE FULLY CONTAINED, CONSTRUCT SEDIMENT TRAPS DOWNSTREAM FROM BLASTING AREA WHERE APPROPRIATE.
11. USE SAND FENCING WHERE APPRORIATE IN AREAS WHERE BLAST MEDIA CANNOT BE FULLY CONTAINED.
12. IF NECESSARY, INSTALL MISTING EQUIPMENT TO REMOVE SANDBLAST GRIT FROM THE AIR PREVENT RUNOFF FROM MISTING OPERATIONS FROM ENTERING DRAINAGE SYSTEMS.
13. USE VACUUM GRIT COLLECTION SYSTEMS WHERE POSSIBLE.
14. KEEP RECORDS OF SANDBLASTING MATERIALS, PROCEDURES, AND WEATHER CONDITIONS ON A DAILY BASIS.
15. TAKE ALL REASONABLE PRECAUTIONS TO ENSURE THAT SANDBLASTING GRIT IS CONTAINED AND KEPT AWAY FROM DRAINAGE STRUCTURES.
16. SAND BLASTING MEDIA SHOULD ALWAYS BE STORED UNDER COVER AWAY FROM DRAINAGE STRUCTURES.
17. ENSURE THAT STORED MEDIA OR GRIT IS NOT SUBJECTED TO TRANSPORT BY WIND.
18. ENSURE THAT ALL SANDBLASTING EQUIPMENT AND STORAGE CONTAINERS COMPLY WITH CURRENT LOCAL, STATE, AND FEDERAL REGULATIONS.
19. CAPTURE AND TREAT RUNOFF, WHICH COMES INTO CONTACT WITH SANDBLASTING MATERIALS OR WASTE.

No.	DATE	REVISION

SEAL:

DESIGN ENGINEER: _____ DATE _____

CITY OF SUGAR LAND, TEXAS
ENGINEERING DEPARTMENT

CONSTRUCTION PLANS FOR:

GENERAL EROSION CONTROL NOTES

JOB No.:
DATE:
DESIGNED BY:
DRAWN BY:
CHECKED BY:
SCALE:

SL–33

SHEET OF

PROJECT BENCHMARK

CITY OF SUGAR LAND FLOODPLAIN REFERENCE MONUMENT SGR–RM 006: A BRASS DISK STAMPED "RM 006" SET IN CONCRETE AT THE SOUTHWEST CORNER OF A CONCRETE SLAB FOR A SANITARY SEWER LIFT STATION LOCATED AT THE SOUTH SIDE OF LEXINGTON BLVD. THE POINT IS LOCATED +/– 850 WEST OF THE INTERESECTION OF LEXINGTON BLVD AND AUSTIN PARKWAY.

ELEVATION = 67.85 FEET NAVD88 2001 ADJ.

SURF. COORD. N:13778271.570 & E:3041366.199

SITE TBM1

TBM–FBCLID2_MON3: A BRASS DISK STAMPED "FBCLID2 MON3" SET IN CONCRETE AT PUMP STATION "A". THE POINT IS LOCATED +/– 350 FEET SOUTH OF THE INTERSECTION OF GREYSTONE WAY AND APRIL MEADOWS WAY.

ELEVATION = 79.25 FEET NAVD88 2001 ADJ.

SURF. COORD. N:13774180.945 & E:3037455.324

SITE TBM2

TBM–FBCLID2_MON4: A BRASS DISK STAMPED "FBCLID2 MON4" SET IN CONCRETE AT THE SOUTH SIDE OF THE AUSTIN PARKWAY BRIDGE OVER DITCH "D1".

ELEVATION = 66.90 FEET NAVD88 2001 ADJ.

SURF. COORD. N:13778125.686 & E:3043056.435

SITE TBM3

TBM–FBCLID2_MON6: A BRASS DISK STAMPED "FBCLID2 MON6" SET IN CONCRETE AT THE SOUTH SIDE OF THE AUSTIN PARKWAY BRIDGE OVER DITCH "C".

ELEVATION = 68.82 FEET NAVD88 2001 ADJ.

SURF. COORD. N:13774026.396 & E:3047357.625

NOTES:

RECORD DRAWING

I HEREBY CERTIFY THAT THIS DRAWING REFLECTS THE IMPROVEMENTS CONSTRUCTED AS TO SIZE, LOCATION, AND GRADE; AND THAT THE CONSTRUCTION WAS IN SUBSTANTIAL COMPLIANCE WITH THE CONTRACT DOCUMENTS.

CONTRACTOR: _____ DATE: _____

TITLE: _____

DATE	REVISION	BY

FORT BEND COUNTY L.I.D NO. 14

PUMPS STATION UPGRADE AND REPLACEMENT

EROSION CONTROL 1 OF 3

LJA Engineering, Inc.
1904 W. Grand Parkway North
Suite 100
Katy, Texas 77449
Phone 713.953.5200
Fax 713.953.5026
FRN-F-1386

LJA PROJECT NO.: 1301–1413

DRAWN: N.E. & J.M. DESIGN: _____ DATE: Aug–24

SCALE: N/A

SHEET NO. C17 OF C20

STATE OF TEXAS
CRAIG W. KALKOMEY
105040
LICENSED PROFESSIONAL ENGINEER
08/29/2024

PUMP STATION UPGRADE AND REPLACEMENT – JOB NO. 1301–1413

Date\Time : Wed, 28 Aug 2024 – 3:47pm User Name : jminter
Path\Name : I:\Projdsk1\1301\1413\ACAD_Sheet_Files\17–PSU_EROSION CONTROL.dwg

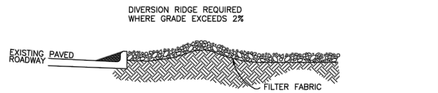

SECTION A – A

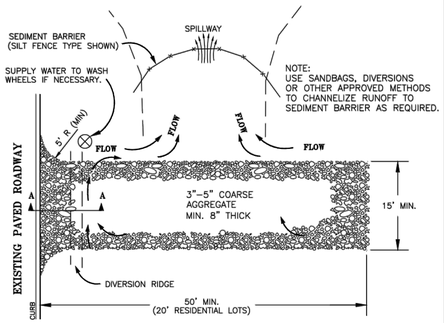

PLAN

WHEN SEDIMENT HAS SUBSTANTIALLY CLOGGED THE VOID AREA BETWEEN THE ROCKS, THE AGGREGATE MAT MUST BE WASHED DOWN OR REPLACED. PERIODIC RE-GRADING AND TOP DRESSING WITH ADDITIONAL STONE MUST BE DONE TO KEEP THE EFFICIENCY OF THE ENTRANCE FROM DIMINISHING.

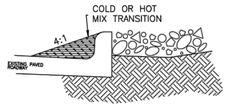

TRANSITION

TEMPORARY STONE CONSTRUCTION
ENTRANCE/EXIT
N.T.S.

SL-ER-01

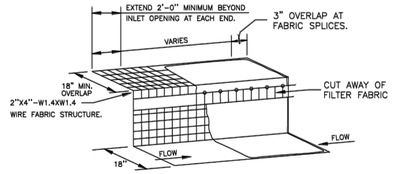

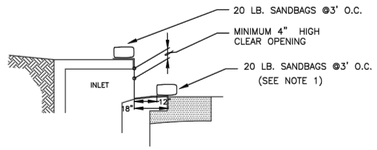

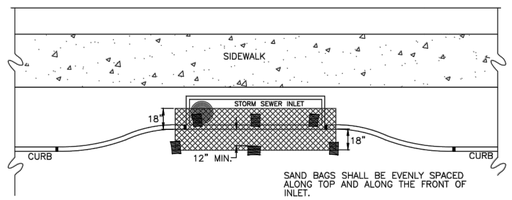

CURB INLET PROTECTION DETAIL
N.T.S.

NOTES:

1. A SECTION OF FILTER FABRIC SHALL BE REMOVED AS SHOWN ON THIS DETAIL TO PROVIDE A 4" MINIMUM CLEAR OPENING. FABRIC MUST BE SECURED TO WIRE BACKING WITH CLIPS OR HOG RINGS AT THIS LOCATION
2. INSPECTION SHALL BE MADE BY CONTRACTOR AND SILT ACCUMULATION MUST BE REMOVED WHEN DEPTH REACHES 2".
3. CONTRACTOR SHALL MONITOR THE PERFORMANCE OF INLET PROECTION DURING EACH RAINFALL EVENT AND IMMEDIATELY REMOVE THE INLET PROTECTION IF THE STORMWATER BEGINS TO OVERTOP THE CURB.
4. INLET PROTECTIONS SHALL BE REMOVED AS SOON AS THE SOURCE OF THE SEDIMENT IS STABILIZED.

INLET OPENING	MINIMUM NUMBER OF SAND BAGS	
	TOP	FRONT
5'	2	3
10'	3	3
15'	3	4
20'	4	4

SL-ER-02

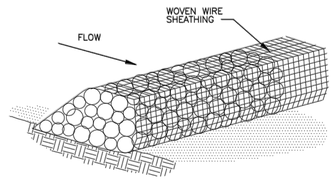

ISOMETRIC PLAN VIEW

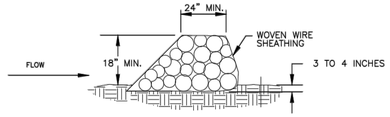

CROSS SECTION
N.T.S.

ROCK BERM DETAIL
N.T.S.

ROCK BERM GENERAL NOTES

1. USE ONLY OPEN GRADED ROCK 4–8 INCHES IN DIAMETER FOR STREAM FLOW CONDITION. USE OPEN GRADED ROCK 2–5 INCHES IN DIAMETER FOR OTHER CONDITIONS.

2. THE ROCK BERM SHALL BE SECURED WITH A WOVEN WIRE SHEATHING HAVING A MAXIMUM OPENING OF 1 INCH AND A MINIMUM WIRE SIZE OF 20 GAUGE AND SHALL BE BURIED IN A TRENCH APPROXIMATELY 3 TO 4 INCHES DEEP.

3. THE ROCK BERM SHALL BE INSPECTED EVERY TWO WEEKS OR AFTER EACH 1/2" RAIN EVENT AND SHALL BE REPLACED WHEN THE STRUCTURE CEASES TO FUNCTION AS INTENDED DUE TO SILT ACCUMULATION AMONG THE ROCKS, WASHOUT, CONSTRUCTION TRAFFIC DAMAGE, ETC.

4. WHEN SILT REACHES A DEPTH EQUAL TO ONE–THIRD OF THE HEIGHT OF THE BERM OR ONE FOOT, WHICHEVER IS LESS, THE SILT SHALL BE REMOVED AND DISPOSED OF PROPERLY.

5. WHEN THE SITE IS COMPLETELY STABILIZED, THE BERM AND ACCUMULATED SILT SHALL BE REMOVED AND DISPOSED OF IN AN APPROVED MANNER.

6. ROCK BERM SHOULD BE USED AS CHECK DAMS FOR CONCENTRATED FLOW AND ARE NOT INTENDED FOR USE IN PERIMETER PROTECTION.

SL-ER-03

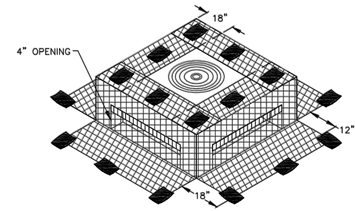

ISOMETRIC VIEW

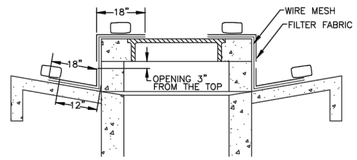

SECTION

FILTER FABRIC WYE INLET PROTECTION
N.T.S.

SL-ER-04

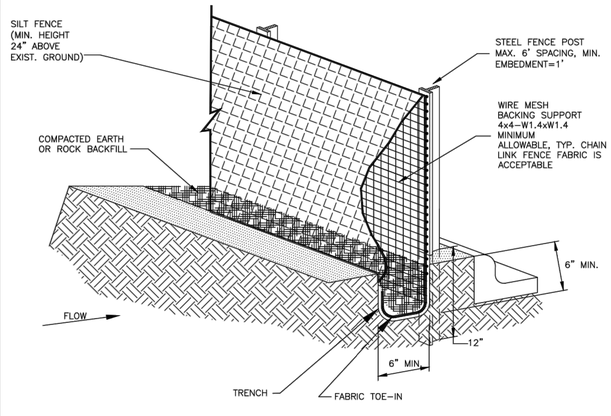

ISOMETRIC PLAN VIEW
N.T.S.

SILT FENCE GENERAL NOTES

1. STEEL POSTS WHICH SUPPORT THE SILT FENCE SHALL BE INSTALLED ON A SLIGHT ANGLE TOWARD THE ANTICIPATED RUNOFF SOURCE. POST MUST BE EMBEDDED A MINIMUM OF ONE FOOT.

2. THE TOE OF THE SILT FENCE SHALL BE TRENCHED IN WITH A SPADE OR MECHANICAL TRENCHER, SO THAT THE DOWNSLOPE FACE OF THE TRENCH IS FLAT AND PERPENDICULAR TO THE LINE OF FLOW. WHERE FENCE CANNOT BE TRENCHED IN (e.g. PAVEMENT), WEIGHT FABRIC FLAP WITH ROCK ON UPHILL SIDE TO PREVENT FLOW FROM SEEPING UNDER FENCE.

3. THE TRENCH MUST BE A MINIMUM OF 6 INCHES DEEP AND 6 INCHES WIDE TO ALLOW FOR THE SILT FENCE FABRIC TO BE LAID IN THE GROUND AND BACKFILLED WITH COMPACTED MATERIAL.

4. SILT FENCE SHOULD BE SECURELY FASTENED TO EACH STEEL SUPPORT POST OR TO WOVEN WIRE, WHICH IN TURN IS ATTACHED TO THE STEEL FENCE POST. THERE SHALL BE A 3 FOOT OVERLAP, SECURELY FASTENED WHERE ENDS OF FABRIC MEET.

5. INSPECTION SHALL BE MADE EVERY TWO WEEKS AND AFTER EACH 1/2" RAINFALL. REPAIR OR REPLACEMENT SHALL BE MADE PROMPTLY AS NEEDED.

6. SILT FENCE SHALL BE REMOVED WHEN THE SITE IS COMPLETELY STABILIZED SO AS NOT TO BLOCK OR IMPEDE STORM FLOW OR DRAINAGE.

7. ACCUMULATED SILT SHALL BE REMOVED WHEN IT REACHES A DEPTH OF HALF THE HEIGHT OF THE FENCE. THE SILT SHALL BE DISPOSED OF AT AN APPROVED SITE AND IN SUCH A MANNER AS TO NOT CONTRIBUTE TO ADDITIONAL SILTATION.

NOTE: STONE OVERFLOW STRUCTURES OF OTHER OUTLET CONTROL DEVICES SHALL BE INSTALLED AT ALL LOW POINTS ALONG THE FENCE OR EVERY 300 FEET IF THERE IS NO APPARENT LOW POINT

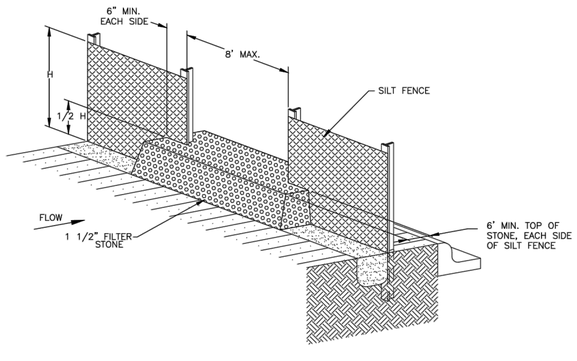

SILT FENCE
STONE OVERFLOW STRUCTURE
N.T.S.

SL-ER-05

SL-DR-35

No.	DATE	REVISION

SEAL:

DESIGN ENGINEER: _____ DATE _____

CITY OF SUGAR LAND, TEXAS
ENGINEERING DEPARTMENT

CONSTRUCTION PLANS FOR:

EROSION CONTROL DETAILS I

JOB No.: DATE: DESIGNED BY: DRAWN BY: CHECKED BY: SCALE:	SL-34 SHEET OF

PROJECT BENCHMARK
CITY OF SUGAR LAND FLOODPLAIN REFERENCE MONUMENT SGR–RM 006: A BRASS DISK STAMPED "RM 006" SET IN CONCRETE AT THE SOUTHWEST CORNER OF A CONCRETE SLAB FOR A SANITARY SEWER LIFT STATION LOCATED AT THE SOUTH SIDE OF LEXINGTON BLVD. THE POINT IS LOCATED +/– 850 WEST OF THE INTERESECTION OF LEXINGTON BLVD AND AUSTIN PARKWAY.

ELEVATION = 67.85 FEET NAVD88 2001 ADJ.

SURF. COORD. N:13778271.570 & E:3041366.199

SITE TBM1
TBM–FBCLID2_MON3: A BRASS DISK STAMPED "FBCLID2 MON3" SET IN CONCRETE AT PUMP STATION "A". THE POINT IS LOCATED +/– 350 FEET SOUTH OF THE INTERSECTION OF GREYSTONE WAY AND APRIL MEADOWS WAY.

ELEVATION = 79.25 FEET NAVD88 2001 ADJ.

SURF. COORD. N:13774180.945 & E:3037455.324

SITE TBM2
TBM–FBCLID2_MON4: A BRASS DISK STAMPED "FBCLID2 MON4" SET IN CONCRETE AT THE SOUTH SIDE OF THE AUSTIN PARKWAY BRIDGE OVER DITCH "D1".

ELEVATION = 66.90 FEET NAVD88 2001 ADJ.

SURF. COORD. N:13778125.686 & E:3043056.435

SITE TBM3
TBM–FBCLID2_MON6: A BRASS DISK STAMPED "FBCLID2 MON6" SET IN CONCRETE AT THE SOUTH SIDE OF THE AUSTIN PARKWAY BRIDGE OVER DITCH "C".

ELEVATION = 68.82 FEET NAVD88 2001 ADJ.

SURF. COORD. N:13774026.396 & E:3047357.625

NOTES:

RECORD DRAWING
I HEREBY CERTIFY THAT THIS DRAWING REFLECTS THE IMPROVEMENTS CONSTRUCTED AS TO SIZE, LOCATION, AND GRADE; AND THAT THE CONSTRUCTION WAS IN SUBSTANTIAL COMPLIANCE WITH THE CONTRACT DOCUMENTS.

CONTRACTOR: _____ DATE: _____

TITLE: _____

DATE	REVISION	BY

FORT BEND COUNTY L.I.D NO. 14

PUMPS STATION UPGRADE AND REPLACEMENT

EROSION CONTROL 2 OF 3

LJA Engineering, Inc.
1904 W. Grand Parkway North
Suite 100
Katy, Texas 77449
Phone 713.953.5200
Fax 713.953.5026
FRN-F-1386

LJA PROJECT NO.: 1301–1413

DRAWN: N.E. & J.M. DESIGN: _____ DATE: Aug–24

SCALE: N/A

SHEET NO. C18 OF C20

STATE OF TEXAS
CRAIG W. KALKOMEY
105040
LICENSED
PROFESSIONAL ENGINEER
08/29/2024

PUMP STATION UPGRADE AND REPLACEMENT – JOB NO. 1301–1413

Date\Time : Wed, 28 Aug 2024 – 3:49pm User Name : jminter
Path\Name : I:\Projdsk1\1301\1413\ACAD_Sheet_Files\17_PSU_EROSION CONTROL.dwg

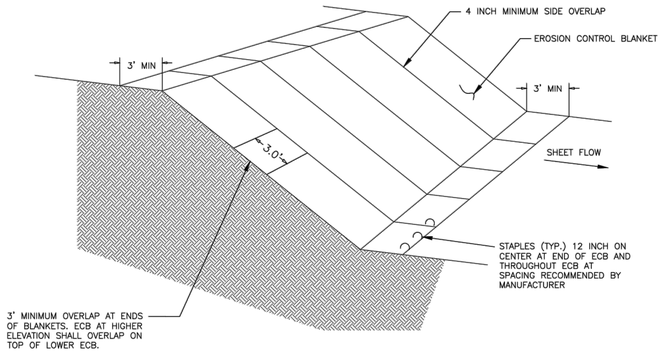

EROSION CONTROL BLANKETS
N.T.S.

SL-ER-06

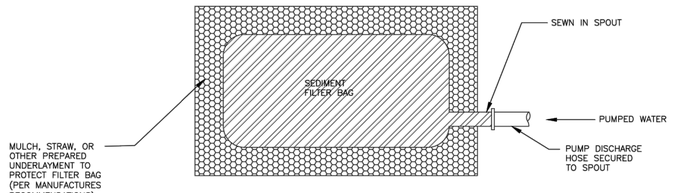

SEDIMENT FILTER BAG PLAN VIEW
N.T.S.

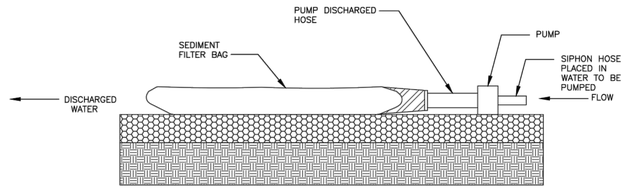

SEDIMENT FILTER BAG PROFILE
N.T.S.

NOTE: A FILTRATION BAG IS NOT REQUIRED IF IF THE DRAINAGE SYSTEM CAN BE ADEQUATELY PROTECTED

DEWATERING CONTROLS
N.T.S.

SL-ER-07

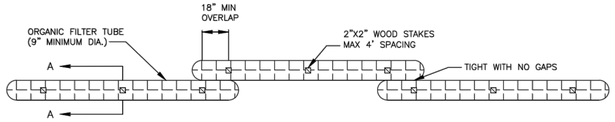

ORGANIC FILTER TUBE PERIMETER CONTROL PLAN VIEW
N.T.S.

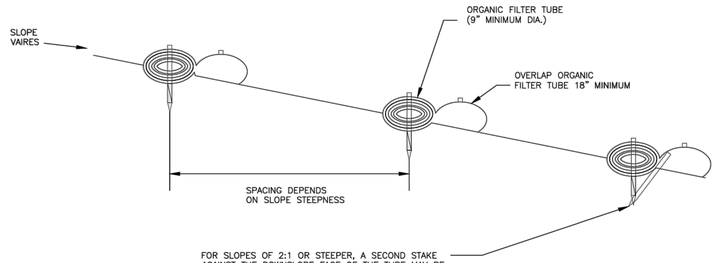

ORGANIC FILTER TUBE PERIMETER CONTROL PROFILE
N.T.S.

ORGANIC FILTER TUBES NOTES

1. TYPE OF NETTING, FILTER MATERIAL, DIAMETER OF TUBE, AND SPACING OF TUBES SHALL BE SPECIFIED BY THE DESIGNER BASED ON THE FOLLOWING SITE PARAMETERS:
   - SIZE OF CONTRIBUTING DRAINAGE AREA
   - STEEPNESS OF SLOPE
   - GROUND CONDITIONS (SOIL OR PAVEMENT)
2. DESIGNER SHALL SHOW ON THE DRAWINGS THE LOCATIONS WHERE TUBE ARE TO BE TURNED UPSLOPE. UPSLOPE LENGTHS SHALL BE MINIMUM OF 10 FEET.

FILTER TUBE
N.T.S.

SL-ER-08

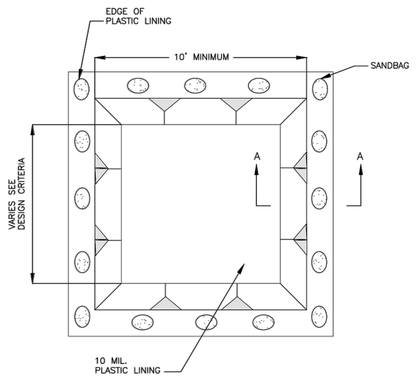

CONCRETE WASHOUT PLAN VIEW
N.T.S.

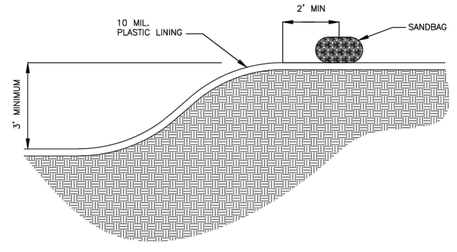

CONCRETE WASHOUT SECTION A-A
N.T.S.

CONCRETE WASHOUT NOTES

1. SANDBAGS MAYBE REPLACED BY A SOIL BERM TO ANCHOR THE PLASTIC BAG

CONCRETE WASHOUT AREA
N.T.S.

SL-ER-09

No.	DATE	REVISION

SEAL:

DESIGN ENGINEER: _____ DATE _____

CITY OF SUGAR LAND, TEXAS
ENGINEERING DEPARTMENT

CONSTRUCTION PLANS FOR:

EROSION CONTROL DETAILS II

JOB No.:
DATE:
DESIGNED BY:
DRAWN BY:
CHECKED BY:
SCALE:

SL-35

SHEET OF

PROJECT BENCHMARK

CITY OF SUGAR LAND FLOODPLAIN REFERENCE MONUMENT SGR-RM 006: A BRASS DISK STAMPED "RM 006" SET IN CONCRETE AT THE SOUTHWEST CORNER OF A CONCRETE SLAB FOR A SANITARY SEWER LIFT STATION LOCATED AT THE SOUTH SIDE OF LEXINGTON BLVD. THE POINT IS LOCATED +/- 850 WEST OF THE INTERESECTION OF LEXINGTON BLVD AND AUSTIN PARKWAY.

ELEVATION = 67.85 FEET NAVD88 2001 ADJ.

SURF. COORD. N:13778271.570 & E:3041366.199

SITE TBM1

TBM-FBCLID2_MON3: A BRASS DISK STAMPED "FBCLID2 MON3" SET IN CONCRETE AT PUMP STATION "A". THE POINT IS LOCATED +/- 350 FEET SOUTH OF THE INTERSECTION OF GREYSTONE WAY AND APRIL MEADOWS WAY.

ELEVATION = 79.25 FEET NAVD88 2001 ADJ.

SURF. COORD. N:13774180.945 & E:3037455.324

SITE TBM2

TBM-FBCLID2_MON4: A BRASS DISK STAMPED "FBCLID2 MON4" SET IN CONCRETE AT THE SOUTH SIDE OF THE AUSTIN PARKWAY BRIDGE OVER DITCH "D1".

ELEVATION = 66.90 FEET NAVD88 2001 ADJ.

SURF. COORD. N:13778125.686 & E:3043056.435

SITE TBM3

TBM-FBCLID2_MON6: A BRASS DISK STAMPED "FBCLID2 MON6" SET IN CONCRETE AT THE SOUTH SIDE OF THE AUSTIN PARKWAY BRIDGE OVER DITCH "C".

ELEVATION = 68.82 FEET NAVD88 2001 ADJ.

SURF. COORD. N:13774026.396 & E:3047357.625

NOTES:

RECORD DRAWING

I HEREBY CERTIFY THAT THIS DRAWING REFLECTS THE IMPROVEMENTS CONSTRUCTED AS TO SIZE, LOCATION, AND GRADE; AND THAT THE CONSTRUCTION WAS IN SUBSTANTIAL COMPLIANCE WITH THE CONTRACT DOCUMENTS.

CONTRACTOR: _____ DATE: _____

TITLE: _____

DATE	REVISION	BY

FORT BEND COUNTY L.I.D NO. 14

PUMPS STATION UPGRADE AND REPLACEMENT

EROSION CONTROL 3 OF 3

LJA Engineering, Inc.
1904 W. Grand Parkway North
Suite 100
Katy, Texas 77449
Phone 713.953.5200
Fax 713.953.5026
FRN-F-1386

LJA PROJECT NO.: 1301-1413

DRAWN: N.E. & J.M. DESIGN: _____ DATE: Aug-24

SCALE: N/A

SHEET NO. C19 OF C20

STATE OF TEXAS
CRAIG W. KALKOMEY
105040
LICENSED PROFESSIONAL ENGINEER
08/28/2024

PUMP STATION UPGRADE AND REPLACEMENT - JOB NO. 1301-1413

Date\Time : Wed, 28 Aug 2024 - 3:50pm User Name : jminter
Path\Name : I:\Projdsk1\1301\1413\CAD_Sheet_Files\17_PSU_EROSION CONTROL.dwg

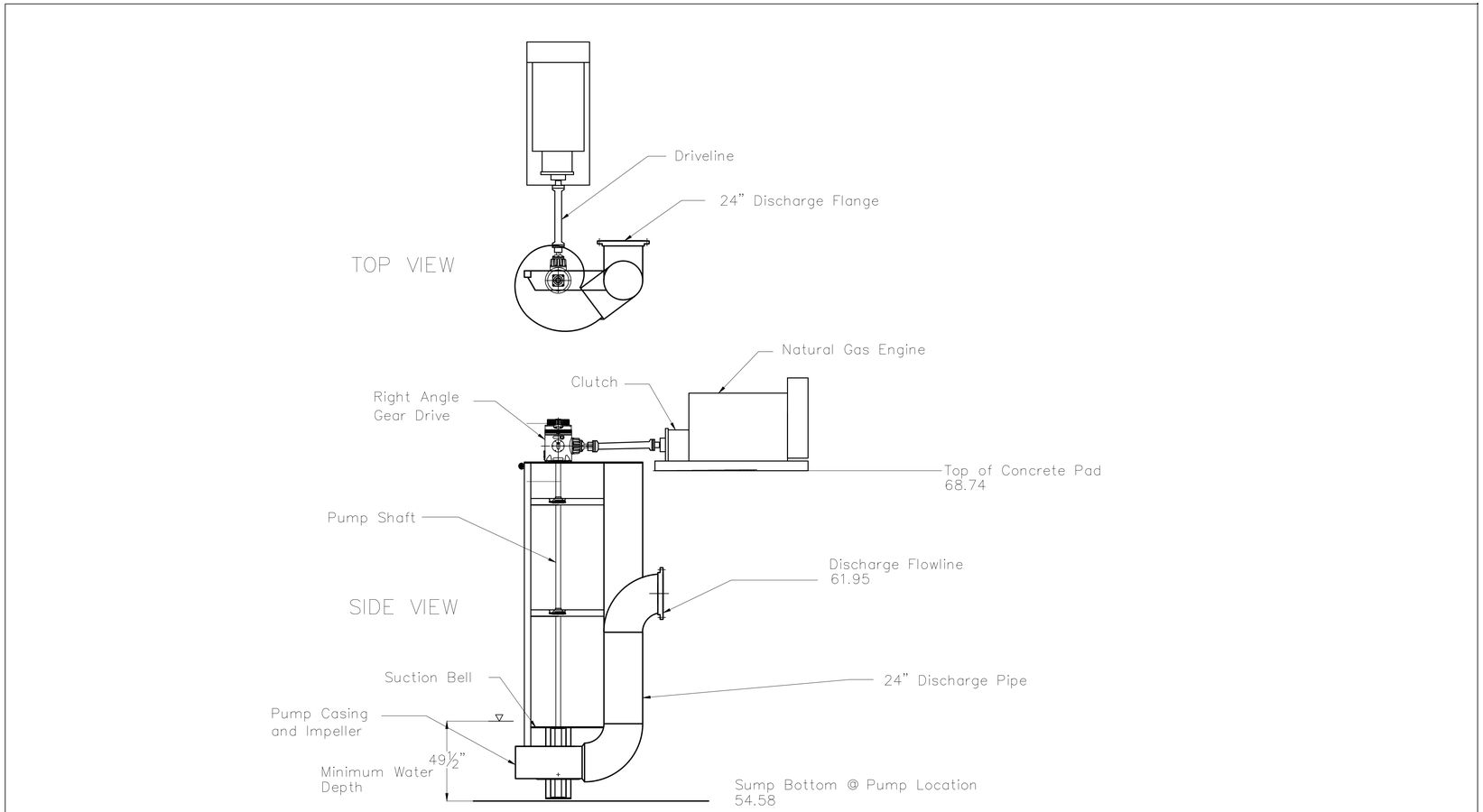

					REV BY	CHECKED BY
	TOLERANCES	RVN	DATE	CHANGE	GG	DL
	FRACTIONS ±1/8"	A	11-01-23	INITIAL RELEASE		
	DECIMALS .X = ±0.1					
	ANGLES = ±1/2"					

Proposal Drawing
24-Inch Vertical Gearbox Pump
Fort Bend, Texas

drawn:	Gene Goodell	date:	Nov 1, 2023
checked:	Dale Lemmons	date:	Nov 1, 2023
approved:	XXX	date:	XXXX
PART NO		rev: A	sht: 1/1

PROJECT BENCHMARK
CITY OF SUGAR LAND FLOODPLAIN REFERENCE MONUMENT SGR-RM 006: A BRASS DISK STAMPED "RM 006" SET IN CONCRETE AT THE SOUTHWEST CORNER OF A CONCRETE SLAB FOR A SANITARY SEWER LIFT STATION LOCATED AT THE SOUTH SIDE OF LEXINGTON BLVD. THE POINT IS LOCATED +/- 850 WEST OF THE INTERESECTION OF LEXINGTON BLVD AND AUSTIN PARKWAY.
ELEVATION = 67.85 FEET NAVD88 2001 ADJ.
SURF. COORD. N:13778271.570 & E:3041366.199

SITE TBM1
TBM-FBCLID2_MON3: A BRASS DISK STAMPED "FBCLID2 MON3" SET IN CONCRETE AT PUMP STATION "A". THE POINT IS LOCATED +/- 350 FEET SOUTH OF THE INTERSECTION OF GREYSTONE WAY AND APRIL MEADOWS WAY.
ELEVATION = 79.25 FEET NAVD88 2001 ADJ.
SURF. COORD. N:13774180.945 & E:3037455.324

SITE TBM2
TBM-FBCLID2_MON4: A BRASS DISK STAMPED "FBCLID2 MON4" SET IN CONCRETE AT THE SOUTH SIDE OF THE AUSTIN PARKWAY BRIDGE OVER DITCH "D1".
ELEVATION = 66.90 FEET NAVD88 2001 ADJ.
SURF. COORD. N:13778125.686 & E:3043056.435

SITE TBM3
TBM-FBCLID2_MON6: A BRASS DISK STAMPED "FBCLID2 MON6" SET IN CONCRETE AT THE SOUTH SIDE OF THE AUSTIN PARKWAY BRIDGE OVER DITCH "C".
ELEVATION = 68.82 FEET NAVD88 2001 ADJ.
SURF. COORD. N:13774026.396 & E:3047357.625

NOTES:

RECORD DRAWING
I HEREBY CERTIFY THAT THIS DRAWING REFLECTS THE IMPROVEMENTS CONSTRUCTED AS TO SIZE, LOCATION, AND GRADE; AND THAT THE CONSTRUCTION WAS IN SUBSTANTIAL COMPLIANCE WITH THE CONTRACT DOCUMENTS.
CONTRACTOR:_____ DATE:_____
TITLE:_____

DATE	REVISION	BY

FORT BEND COUNTY L.I.D NO. 14

PUMPS STATION UPGRADE AND REPLACEMENT

PTO DRIVEN PUMP DETAILS

LJA Engineering, Inc.
1904 W. Grand Parkway North
Suite 100
Katy, Texas 77449
Phone 713.953.5200
Fax 713.953.5026
FRN-F-1386

LJA PROJECT NO.: 1301-1413

DRAWN: N.E. & J.M. DESIGN: _____ DATE: Aug-24

SCALE: N/A

SHEET NO. C20 OF C20

STATE OF TEXAS · CRAIG W. KALKOMEY · 105040 · LICENSED PROFESSIONAL ENGINEER · 08/29/2024

PUMP STATION UPGRADE AND REPLACEMENT - JOB NO. 1301-1413

Date\Time : Wed, 28 Aug 2024 - 3:51pm User Name : jminter
Path\Name : I:\Projdsk\1301\1413\(ACAD)_Sheet_Files\20_PSU_PTO PUMP DETAILS.dwg