ADDENDUM NO. 1
CONSTRUCTION OF THE
PUMP STATION UPGRADE AND REPLACEMENT
TO SERVE
FORT BEND COUNTY LEVEE IMPROVEMENT DISTRICT NO. 14
CITY OF SUGAR LAND ETJ
FORT BEND COUNTY, TEXAS

OCTOBER 14, 2024

LJA JOB NO. 1301-1413 (9.4)

The following changes will be considered part of the Construction Plans, Bid Proposal and Contract Documents:

1.) Reference: **Contract Documents – Bid Proposal**

Replace: Pages 1 through 14 of 14 with revised Pages 1 through 14 of 14 (attached).

2.) Reference: **Technical Specifications – Table of Contents**

Replace: Pages 1 and 2 of 2 with revised Pages 1 of 2 and 2 (attached).

3.) Reference: **Technical Specifications – Section 01520 – Temporary Facilities for Engineer**

Clarification: This section shall be removed in its entirety.

4.) Reference: **Construction Plans – Structural Drawings**

Insert: Sheets S1 through S11 (attached).

5.) Reference: **Construction Plans – Electrical Details**

Insert: Sheets E1 through E7 (attached).

There are no other changes or revisions to the Construction Plans, Bid Proposal and Contract Documents at this time.



BID PROPOSAL

Date:_____

Bid of _____
(Legal Name of Bidder – Company)

[ ] an individual proprietorship

[ ] a corporation organized and existing under the laws of _____

[ ] a partnership consisting of _____

_____

[ ] a joint venture

[ ] other _____

FOR:

CONSTRUCTION OF THE
PUMP STATION UPGRADE AND REPLACEMENT
TO SERVE
FORT BEND COUNTY LEVEE IMPROVEMENT DISTRICT NO. 14
CITY OF SUGAR LAND ETJ
FORT BEND COUNTY, TEXAS
LJA JOB NO. 1301-1413

TO: **FORT BEND COUNTY LEVEE IMPROVEMENT DISTRICT NO. 14**
c/o LJA Engineering, Inc.
1904 West Grand Parkway North, Suite 120
Katy, Texas 77449

BID PROPOSAL

CONSTRUCTION OF THE
PUMP STATION UPGRADE AND REPLACEMENT
TO SERVE
FORT BEND COUNTY LEVEE IMPROVEMENT DISTRICT NO. 14
CITY OF SUGAR LAND ETJ
FORT BEND COUNTY, TEXAS
LJA JOB NO. 1301-1413

Ladies and Gentlemen:

Pursuant to the foregoing Invitation and Instructions to Bidders, the undersigned bidder hereby proposes to do all the work for the unit prices bid to furnish all necessary superintendence, labor, machine, equipment, tools, materials, insurance and miscellaneous items, to complete all work according to the bids, as provided in the construction plan and contract documents for the construction of the Pump Station Upgrade and Replacement to Serve Fort Bend County Levee Improvement District No. 14, and clean up the site to the satisfaction of the Owner/Engineer, and bind himself on acceptance of this proposal to execute a contract and bonds for completing said project within the time stated for the following prices, to wit:

ITEM NO.	ITEM DESCRIPTION	UNIT	QTY.	UNIT PRICE	TOTAL AMOUNT
STORMWATER PUMP STATION SITE ITEMS					
1.	SITE WORK, INCLUDING BUT NOT LIMITED TO SITE DEMOLITION. DEBRIS REMOVAL AND DISPOSAL, GRADING, SITE DRAINAGE, SITE PAVING, DRIVEWAY, SLABS ON GRADE, BOLLARDS AND ALL APPURTENANCES, COMPLETE IN PLACE	LS	1	$_____	$_____
2.	7-FOOT METAL FENCING, INCLUDING BUT NOT LIMITED TO DRILLED SHAFTS, BASE PLATES, HARDWARE, AND ALL RELATED AND MISCELLANEOUS APPURTENANCES AND ITEMS RELATED TO AND NECESSARY TO COMPLETE THE PROJECT AS SHOWN IN THE PLANS, COMPLETE IN PLACE	LF	495	$_____	$_____
3.	DOUBLE SWING GATE, INCLUDING ALL APPURTENANCES, COMPLETE IN PLACE	EA	1	$_____	$_____
4.	24-INCH DIP DISCHARGE PIPES, INCLUDING BENDS, TEES, AND ALL APPURTENANCES, COMPLETE IN PLACE	LF	270	$_____	$_____

* Denotes Minimum Unit Price Bid for Each Item

BID PROPOSAL

CONSTRUCTION OF THE
PUMP STATION UPGRADE AND REPLACEMENT
TO SERVE
FORT BEND COUNTY LEVEE IMPROVEMENT DISTRICT NO. 14
CITY OF SUGAR LAND ETJ
FORT BEND COUNTY, TEXAS
LJA JOB NO. 1301-1413

ITEM NO.	ITEM DESCRIPTION	UNIT	QTY.	UNIT PRICE	TOTAL AMOUNT
STORMWATER PUMP STATION SITE ITEMS					
5.	36-INCH RCP, INCLUDING BENDS, TEES, AND ALL APPURTENANCES, COMPLETE IN PLACE	LF	50	$_____	$_____
6.	REMOVE AND REPLACE EXISTING 42-INCH STORM MANHOLE AND REPLACE WITH 72-INCH STORM MANHOLE WITH E-INLET TOP, ALL DEPTHS, COMPLETE IN PLACE	LS	1	$_____	$_____
7.	24-INCH PTO DRIVEN PUMP (15,300 GPM, TDH 18') BY GATOR PUMP, INC. (OR APPROVED EQUAL), COMPLETE IN PLACE	EA	2	$_____	$_____
8.	145 HP NATURAL GAS ENGINE, CAT G3306B INCLUDING WEATHER ENCLOSURE/PROTECTION (OR APPROVED EQUAL)	EA	2	$_____	$_____
9.	**DERAN M16AH PUMP GEARHEAD (7:2 GEARING RATIO) FOR 145 HP NATURAL GAS ENGINE**	EA	2	$_____	$_____
10.	24-INCH FLAPGATE, F-55 WATERMAN HEAVY DUTY (OR APPROVED EQUAL)	EA	2	$_____	$_____
11.	SLIDE GATES WITH ELECTRONIC ACTUATORS	EA	4	$_____	$_____
SUBTOTAL STORMWATER PUMP STATION SITE ITEMS					$_____

* Denotes Minimum Unit Price Bid for Each Item

CONSTRUCTION OF THE
PUMP STATION UPGRADE AND REPLACEMENT
TO SERVE
FORT BEND COUNTY LEVEE IMPROVEMENT DISTRICT NO. 14
CITY OF SUGAR LAND ETJ
FORT BEND COUNTY, TEXAS
LJA JOB NO. 1301-1413

ITEM NO.	ITEM DESCRIPTION	UNIT	QTY.	UNIT PRICE	TOTAL AMOUNT
STORMWATER PUMP STATION ELECTRICAL ITEMS					
12.	SERVICE MCC WITH AUTOMATIC TRANSFER SWITCH, CABLE EXTENSION (AS NEEDED), AND TERMINATIONS	LS	1	$_____	$_____
13.	FURNISH AND INSTALL CONTROL PANEL, INCLUDING PLC, BACK UP PLC, HMI, PS, SPD, PUMP CONTROLLER, RADAR LEVEL TRANSMITTER, PRESSURE TRANSDUCERS, RELAYS, SWITCHES, LIGHTS, COMMUNICATION EQUIPMENT, WIRING, FUSES, AND TERMINALS	LS	1	$_____	$_____
14.	FURNISH AND INSTALL PUMP AND TRANSMITTERS J-BOXES (NEMA-4X-SS), MECHANICAL SEALS, WIRING, AND TERMINATIONS FOR NEW DIESEL ENGINE PUMPS	LS	1	$_____	$_____
15.	DEMOLITION OF ELECTRICAL AND CONTROL COMPONENTS INCLUDING CONTROL PANEL AND MISCELLANEOUS ELECTRICAL AND HAULING	LS	1	$_____	$_____
16.	ELECTRICAL INSTALLATION OF FOUR (4) NEW SLIDE GATES WITH ELECTRIC ACTUATORS	LS	1	$_____	$_____
17.	ELECTRICAL AND CONTROL SYSTEM INSTALLATIONS LABOR, DELIVERY, TESTING, AND COMMISSIONING	LS	1	$_____	$_____

* Denotes Minimum Unit Price Bid for Each Item

CONSTRUCTION OF THE
PUMP STATION UPGRADE AND REPLACEMENT
TO SERVE
FORT BEND COUNTY LEVEE IMPROVEMENT DISTRICT NO. 14
CITY OF SUGAR LAND ETJ
FORT BEND COUNTY, TEXAS
LJA JOB NO. 1301-1413

ITEM NO.	ITEM DESCRIPTION	UNIT	QTY.	UNIT PRICE	TOTAL AMOUNT
STORMWATER PUMP STATION ELECTRICAL ITEMS					
18.	ALLOWANCE FOR ESTABLISHED GAS UTILITY BY CENTERPOINT ENERGY. THE AMOUNTS PAID, SUPPORTED BY INVOICES SHALL BE INCLUDED IN PAY REQUESTS FOR REIMBURSEMENT WITHOUT A GENERAL CONTRACTOR MARKUP, (TO BE USED ONLY AS DIRECTED BY THE ENGINEER), COMPLETE IN PLACE	LS	1	$ **35,000.00**	$ **35,000.00**
SUBTOTAL STORMWATER PUMP STATION ELECTRICAL ITEMS				$	

* Denotes Minimum Unit Price Bid for Each Item

CONSTRUCTION OF THE
PUMP STATION UPGRADE AND REPLACEMENT
TO SERVE
FORT BEND COUNTY LEVEE IMPROVEMENT DISTRICT NO. 14
CITY OF SUGAR LAND ETJ
FORT BEND COUNTY, TEXAS
LJA JOB NO. 1301-1413

ITEM NO.	ITEM DESCRIPTION	UNIT	QTY.	UNIT PRICE	TOTAL AMOUNT
STORMWATER PUMP STATION STRUCTURAL ITEMS					
19.	DEMOLITION OF EXISTING STRUCTURES, INCLUDING BUT NOT LIMITED TO, DEMOLITION AND REMOVAL OF STEEL FRAMEWORK, UPPER RETAINING WALL, HEADWALL STEM, ANY OTHER STRUCTURAL CONCRETE, HAND RAILS, AND ALL RELATED AND MISCELLANEOUS APPURTENANCES AND ITEMS RELATED TO AND NECESSARY TO COMPLETE THE PROJECT AS SHOWN IN THE PLANS, COMPLETE IN PLACE.	LS	1	$_____	$_____
20.	CORING OF EXISTING HEADWALL, INCLUDING BUT NOT LIMITED TO, DEMOLITION AND REMOVAL OF HAND RAIL, CORE HOLES, GROUT, AND ALL RELATED AND MISCELLANEOUS APPURTENANCES AND ITEMS RELATED TO AND NECESSARY TO COMPLETE THE PROJECT AS SHOWN IN THE PLANS, COMPLETE IN PLACE.	LS	1	$_____	$_____

* Denotes Minimum Unit Price Bid for Each Item

CONSTRUCTION OF THE
PUMP STATION UPGRADE AND REPLACEMENT
TO SERVE
FORT BEND COUNTY LEVEE IMPROVEMENT DISTRICT NO. 14
CITY OF SUGAR LAND ETJ
FORT BEND COUNTY, TEXAS
LJA JOB NO. 1301-1413

ITEM NO.	ITEM DESCRIPTION	UNIT	QTY.	UNIT PRICE	TOTAL AMOUNT
STORMWATER PUMP STATION STRUCTURAL ITEMS					
21.	HEADWALL EXTENSION, INCLUDING BUT NOT LIMITED TO, STRUCTURAL CONCRETE, NEW HAND RAILS, EXCAVATION, BACKFILL (IN-SITU MATERIAL), CONCRETE BARRIERS, WATER STOPS, FILTER FABRIC, SLOPE PAVEMENT, WEEP HOLES, GRAVEL, ANCHORAGE HARDWARE, EXPANSION MATERIAL, AND ALL RELATED AND MISCELLANEOUS APPURTENANCES AND ITEMS RELATED TO AND NECESSARY TO COMPLETE THE PROJECT AS SHOWN IN THE PLANS, COMPLETE IN PLACE.	CY	144	$_____	$_____
22.	PTO DRIVEN PUMP PAD, INCLUDING BUT NOT LIMITED TO, STRUCTURAL CONCRETE, FOUNDATION, VAPOR BARRIER, COMPACTED SELECT FILL, EXCAVATION AND ALL RELATED AND MISCELLANEOUS APPURTENANCES AND ITEMS RELATED TO AND NECESSARY TO COMPLETE THE PROJECT AS SHOWN IN THE PLANS, COMPLETE IN PLACE.	CY	15	$_____	$_____

* Denotes Minimum Unit Price Bid for Each Item

ITEM NO.	ITEM DESCRIPTION	UNIT	QTY.	UNIT PRICE	TOTAL AMOUNT
STORMWATER PUMP STATION STRUCTURAL ITEMS					
23.	STAIRCASE STRUCTURE, INCLUDING BUT NOT LIMITED TO, STRUCTURAL CONCRETE, SLAB, FOUNDATION, COMPACTED SELECT FILL, COMPACTED SAND CUSHION, ANCHORAGE HARDWARE, EXCAVATION AND ALL RELATED AND MISCELLANEOUS APPURTENANCES AND ITEMS RELATED TO AND NECESSARY TO COMPLETE THE PROJECT AS SHOWN IN THE PLANS, COMPLETE IN PLACE.	LS	1	$_____	$_____
24.	HEADWALL STRUCTURAL MODIFICATIONS, INCLUDING BUT NOT LIMITED TO, STRUCTURAL CONCRETE, REMOVABLE GRATE PANELS, SLAB TROUGHS, CEMENT STABILIZED SAND, CONCRETE BAFFLES, CONCRETE WALLS, CONCRETE CLOSURE POURS, HAND RAILS, WATER STOPS, FILTER FABRIC, SLOPE PAVEMENT, WEEP HOLES, GRAVEL, ANCHORAGE HARDWARE AND INSTALLATION, EXPANSION MATERIAL, AND ALL RELATED AND MISCELLANEOUS APPURTENANCES AND ITEMS RELATED TO AND NECESSARY TO COMPLETE THE PROJECT AS SHOWN IN THE PLANS, COMPLETE IN PLACE.	CY	60	$_____	$_____
25.	EXCAVATION, HAULING, PLACEMENT AND COMPACTION OF SPOILS, EXCESS TO BE HAULED OFF-SITE AND LEGALLY DISPOSED OF BY THE CONTRACTOR.	CY	211	$_____	$_____

* Denotes Minimum Unit Price Bid for Each Item

CONSTRUCTION OF THE
PUMP STATION UPGRADE AND REPLACEMENT
TO SERVE
FORT BEND COUNTY LEVEE IMPROVEMENT DISTRICT NO. 14
CITY OF SUGAR LAND ETJ
FORT BEND COUNTY, TEXAS
LJA JOB NO. 1301-1413

ITEM NO.	ITEM DESCRIPTION	UNIT	QTY.	UNIT PRICE	TOTAL AMOUNT
STORMWATER PUMP STATION STRUCTURAL ITEMS					
26.	SELECT FILL, TO BE HAULED IN FROM OFFSITE SOURCE, TO BE PLACED AND COMPACTED TO 95% STANDARD PROCTOR DENSITY WITH MAXIMUM 6" LIFTS, COMPLETE IN PLACE	CY	109	$_____	$_____
27.	CEMENT STABILIZED SAND, (2 SACKS OF CEMENT PER CUBIC YARD CEMENT STABILIZED SAND), COMPLETE IN PLACE.	CY	32	$_____	$_____
28.	SAND CUSHION, TO BE HAULED IN FROM OFFSITE SOURCE, TO BE PLACED AND COMPACTED TO 95% STANDARD PROCTOR DENSITY WITH MAXIMUM 6" LIFTS, COMPLETE IN PLACE	CY	1	$_____	$_____
SUBTOTAL STORMWATER PUMP STATION STRUCTURAL ITEMS					$_____

* Denotes Minimum Unit Price Bid for Each Item

CONSTRUCTION OF THE
PUMP STATION UPGRADE AND REPLACEMENT
TO SERVE
FORT BEND COUNTY LEVEE IMPROVEMENT DISTRICT NO. 14
CITY OF SUGAR LAND ETJ
FORT BEND COUNTY, TEXAS
LJA JOB NO. 1301-1413

ITEM NO.	ITEM DESCRIPTION	UNIT	QTY.	UNIT PRICE	TOTAL AMOUNT
MISCELLANEOUS ITEMS					
29.	MOBILIZATION	LS	1	$_____	$_____
30.	STORM WATER POLLUTION PREVENTION PLAN WITH CONCRETE TRUCK WASHOUT, ROCK FILTER DAM AND STABILIZED CONSTRUCTION ENTRANCE, TO BE MAINTAINED UNTIL CONTRACTOR'S NOTICE OF TERMINATION IS SUBMITTED. INCLUDING ADMINISTRATION, MAINTENANCE, AND REMOVAL AS REQUIRED BY THE PLANS, (TO BE USED ONLY AS DIRECTED BY THE ENGINEER), COMPLETE IN PLACE	LS	1	$_____	$_____
31.	EXTRA CEMENT STABILIZED SAND, (2 SACKS OF CEMENT PER CUBIC YARD CEMENT STABILIZED SAND), (TO BE USED ONLY AS DIRECTED BY THE ENGINEER), COMPLETE IN PLACE.	CY	10	$_____	$_____
32.	EXTRA 4,000 PSI CONCRETE WITH REINFORCING STEEL, (TO BE USED ONLY AS DIRECTED BY THE ENGINEER), COMPLETE IN PLACE.	CY	10	$_____	$_____
33.	EXTRA SELECT FILL, (TO BE USED ONLY AS DIRECTED BY THE ENGINEER), COMPLETE IN PLACE.	CY	30	$_____	$_____
34.	DEWATERING FOR STRUCTURE, AS REQUIRED BY SOIL CONDITIONS, (TO BE USED ONLY AS DIRECTED BY THE ENGINEER), COMPLETE IN PLACE.	LS	1	$_____	$_____

* Denotes Minimum Unit Price Bid for Each Item

CONSTRUCTION OF THE
PUMP STATION UPGRADE AND REPLACEMENT
TO SERVE
FORT BEND COUNTY LEVEE IMPROVEMENT DISTRICT NO. 14
CITY OF SUGAR LAND ETJ
FORT BEND COUNTY, TEXAS
LJA JOB NO. 1301-1413

ITEM NO.	ITEM DESCRIPTION	UNIT	QTY.	UNIT PRICE	TOTAL AMOUNT
MISCELLANEOUS ITEMS					
35.	DEWATERING OF LINE WORK, (TO BE USED ONLY AS DIRECTED BY THE ENGINEER), COMPLETE IN PLACE.	LS	1	$_____	$_____
36.	SITE RESTORATION, INCLUDING BUT NOT LIMITED TO TURF ESTABLISHMENT, HYDROMULCH SEEDING, AND DEBRIS REMOVAL, COMPLETE IN PLACE.	LS	1	$_____	$_____
37.	TRENCH SAFETY SYSTEM, ALL DEPTHS, ALL SIZES, COMPLETE IN PLACE	LF	320	$_____	$_____
SUBTOTAL MISCELLANEOUS ITEMS					$_____

* Denotes Minimum Unit Price Bid for Each Item

BID PROPOSAL

CONSTRUCTION OF THE
PUMP STATION UPGRADE AND REPLACEMENT
TO SERVE
FORT BEND COUNTY LEVEE IMPROVEMENT DISTRICT NO. 14
CITY OF SUGAR LAND ETJ
FORT BEND COUNTY, TEXAS
LJA JOB NO. 1301-1413

ITEM NO.	ITEM DESCRIPTION	UNIT	QTY.	UNIT PRICE	TOTAL AMOUNT
ALTERNATE BID					
1.	16-INCH DIP DISCHARGE BENDS, TEES, AND PIPES, INCLUDING ALL APPURTENANCES, COMPLETE IN PLACE.	LF	51	$_____	$_____
2.	16-INCH GATE VALVES, COMPLETE IN PLACE.	EA	9	$_____	$_____
SUBTOTAL ALTERNATE BID ITEMS					$_____

CONTRACTOR IS REQUIRED TO BID ALTERNATE BID. OWNER RETAINS THE RIGHT TO EVALUATE THE BID BASED ON THE BASE BID ALONE, CONSIDERING ONE ALTERNATE OR MORE THAN ONE ALTERNATE, WHICHEVER IS DEEMED MOST ADVANTAGEOUS TO THE OWNER.

* Denotes Minimum Unit Price Bid for Each Item

BID PROPOSAL

CONSTRUCTION OF THE
PUMP STATION UPGRADE AND REPLACEMENT
TO SERVE
FORT BEND COUNTY LEVEE IMPROVEMENT DISTRICT NO. 14
CITY OF SUGAR LAND ETJ
FORT BEND COUNTY, TEXAS
LJA JOB NO. 1301-1413

PROPOSAL BIDDING SUMMATION

SUBTOTAL STORMWATER PUMP STATION SITE ITEMS	$_____
SUBTOTAL STORMWATER PUMP STATION ELECTRICAL ITEMS	$_____
SUBTOTAL STORMWATER PUMP STATION STRUCTURAL ITEMS	$_____
SUBTOTAL MISCELLANEOUS ITEMS	$_____

ALTERNATE BID

TOTAL AMOUNT BASE BID	$_____
SUBTOTAL ALTERNATE BID	$_____
TOTAL AMOUNT BID INCLUDING ALTERNATE	$_____

It is understood that in the event the successful bidder fails to enter into the Contract and to furnish a Performance Bond and Payment Bond in the amount of 100 percent of the Contract and for all parts of the work, as specified in the Instructions to Bidders, the Bidder will forfeit the Certified or Cashier's Check, OR Bid Bond, as provided in the Contract Documents.

The undersigned proposes, if awarded the Contract, to begin work as stipulated in the written Notice to Proceed issued by the Engineer, and to substantially complete the work within 240 calendar days after the date of the written Notice to Proceed and to complete the project within 270 calendar days after the date of the written Notice to Proceed.

This bid proposal shall be considered part of the contract.

_____	_____
(Signature)	(Company Name – Bidder)
_____	_____
(Type Name)	(Address)
_____	_____
(Title)	(City) (County) (Zip)
_____	_____
(Attest)	(Phone No.)
(Seal, If Bidder is a Corporation)	_____
	(E-mail Address)

BID PROPOSAL

CONSTRUCTION OF THE
PUMP STATION UPGRADE AND REPLACEMENT
TO SERVE
FORT BEND COUNTY LEVEE IMPROVEMENT DISTRICT NO. 14
CITY OF SUGAR LAND ETJ
FORT BEND COUNTY, TEXAS
LJA JOB NO. 1301-1413

ACKNOWLEDGMENT OF RECEIPT OF ADDENDUM

ADDENDUM NO. 1 _____ _____
Signature Date

ADDENDUM NO. 2 _____ _____
Signature Date

ADDENDUM NO. 3 _____ _____
Signature Date

ADDENDUM NO. 4 _____ _____
Signature Date

ADDENDUM NO. 5 _____ _____
Signature Date

ADDENDUM NO. 6 _____ _____
Signature Date

STANDARD SPECIFICATIONS
CONSTRUCTION OF THE
PUMP STATION UPGRADE AND REPLACEMENT
TO SERVE
FORT BEND COUNTY LEVEE IMPROVEMENT DISTRICT NO. 14
CITY OF SUGAR LAND ETJ
FORT BEND COUNTY, TEXAS

TABLE OF CONTENTS

DIVISION 1 – GENERAL REQUIREMENTS

SUMMARY
01110 Summary of Work
01181 Private Utilities

PRICE AND PAYMENT PROCEDURES
01270 Measurement and Payment
01292 Schedule of Values and Material on Hand

ADMINISTRATIVE REQUIREMENTS
01325 Construction Schedules and Monthly Progress Meetings
01328 Construction Surveying
01330 Submittal Procedures

QUALITY REQUIREMENTS
01422 Reference Technical Standards
01457 Construction Tests and Inspection

TEMPORARY FACILITIES AND CONTROLS
01562 Construction Fence
01565 General Source Controls
01566 Tree and Plant Protection
01580 Project Signs

EXECUTION REQUIREMENTS
01785 Project Record Documents

DIVISION 2 – SITE CONSTRUCTION

SITE PREPARATION
02120 Material Disposal
02200 Site Preparation and Restoration
02232 Selective Clearing
02233 Clearing and Grubbing
02241 Care and Control of Water
02269 Trench Safety System

EARTHWORK
02314 Fill Material
02315 Excavating and Backfilling
02316 Structural Excavating and Backfilling
02321 Cement Stabilized Sand
02322 Flowable Fill
02361 Reinforced Silt Fence

STANDARD SPECIFICATIONS
CONSTRUCTION OF THE
PUMP STATION UPGRADE AND REPLACEMENT
TO SERVE
FORT BEND COUNTY LEVEE IMPROVEMENT DISTRICT NO. 14
CITY OF SUGAR LAND ETJ
FORT BEND COUNTY, TEXAS

TABLE OF CONTENTS

02364 Filter Dams
02365 Stabilized Construction Access

FOUNDATION AND LOAD-BEARING ELEMENTS
02462 Steel Sheet Piling
02464 Timber Bents

DRAINAGE AND CONTAINMENT
02505 High Density Polyethylene Pipe
02611 Reinforced Concrete Pipe
02612 Precast Reinforced Concrete Box
02630 Concrete Manholes
02631 Storm Sewers and Outfalls
02632 Inlets, Headwalls and Wingwalls
02642 Corrugated Metal Pipe

PLANTING
02911 Topsoil
02921 Turf Planting Zone Preparation
02922 Sod
02923 Broadcast Seeding
02925 Hydromulch-Hydroseeding
02936 Fertilizer and Soil Amendments
02938 Non-Cyclical Mowing
02940 Irrigation
02941 Herbicide Application

DIVISION 3 – CONCRETE

CAST-IN-PLACE CONCRETE
03310 Concrete

DIVISION 15 – MECHANICAL

15073 Ductile Iron Piping and Fittings

All structural construction for this project shall be performed in accordance with the 2014 edition of the Texas Department of Transportation (TxDOT) “STANDARD SPECIFICATIONS FOR CONSTRUCTION AND MAINTENANCE OF HIGHWAYS, STREETS AND BRIDGES”

The items contained in this section set forth clarifications to, or enlargement upon, the TxDOT Specifications and are made a part thereof by their reference in this Section. In the event of a conflict between these amendments and the TxDOT Specifications, these amendments control.

GENERAL

1) THE CONTRACTOR SHALL BE RESPONSIBLE FOR ALL CONSTRUCTION METHODS AND THE STABILITY OF THE LEVEE AND ALL OTHER STRUCTURES IN THE CONSTRUCTION ZONE DURING CONSTRUCTION.

2) THE CONTRACTOR SHALL COORDINATE AND VERIFY ALL EXISTING UTILITIES PRIOR TO COMMENCEMENT OF CONSTRUCTION.

3) THE CONTRACTOR SHALL REFER TO THE PROJECT GEOTECHNICAL REPORT TO FAMILIARIZE THEMSELVES WITH SUBSURFACE CONDITIONS AND SHALL COMPLY WITH ALL RECOMMENDATIONS FOR SITE PREPARATION ALONG WITH FILL REQUIREMENTS UNLESS OTHERWISE NOTED.

CONCRETE

1) DESIGN SHALL CONFORM TO THE LATEST BUILDING CODE REQUIREMENTS FOR STRUCTURAL CONCRETE (ACI-318).

2) UNLESS STATED OTHERWISE, ALL CONCRETE SHALL BE GOVERNED BY ITEMS 420 (CONCRETE SUBSTRUCTURES) AND 421 (HYDRAULIC CEMENT CONCRETE) OF THE TEXAS DEPARTMENT OF TRANSPORTATION'S NOVEMBER 1, 2014 STANDARD SPECIFICATIONS FOR CONSTRUCTION AND MAINTENANCE OF HIGHWAYS, STREETS & BRIDGES.

ITEM	CONCRETE CLASS	COMPRESSIVE STRENGTH AT 28 DAYS SHALL NOT BE LESS THAN
STRUCTURAL MEMBERS (WALLS, SLABS, CULVERTS)	S	4000 PSI
RAMPS & CHANNEL LINING	C	3600 PSI
GROUT FILL	H	3000 PSI
SEAL SLAB	B	2000 PSI

3) ALL REINFORCING BARS SHALL CONFORM TO ASTM A-615, GRADE 60. ARRANGEMENT AND DETAILS OF REINFORCING STEEL, INCLUDING BAR SUPPORTS AND SPACERS, SHALL BE IN ACCORDANCE WITH LATEST ACI DETAILING MANUAL (ACI 315), UNLESS OTHERWISE NOTED.

4) ALL SLAB AND BEAM REINFORCEMENT SHALL HAVE A MINIMUM EXTENSION INTO THE SUPPORT IN ACCORDANCE WITH THE LATEST ACI CODE. IF SUCH EXTENSION IS NOT POSSIBLE, BARS SHALL TERMINATE IN STANDARD HOOKS.

5) MINIMUM REINFORCING BARS DEVELOPMENT LENGTH (Ld) AND LAP SPLICES SHALL BE AS FOLLOWS :

REINFORCING DEVELOPMENT AND SPLICE LENGTHS (f'c ≥ 3,600 psi)

BAR SIZE	DEVELOPMENT LENGTH				SPLICE LENGTH	
	TOP BAR	OTHER	HOOK		TOP BAR	OTHER
	L_{d-top}	L_d	L_{dh}	L_{ext}	L_{st-top}	L_{st}
#3	1'-3"	1'-0"	0'-8"	0'-6"	1'-7"	1'-4"
#4	1'-7"	1'-3"	0'-10"	0'-8"	2'-1"	1'-7"
#5	2'-0"	1'-6"	1'-0"	0'-10"	2'-7"	2'-0"
#6	2'-5"	1'-10"	1'-3"	1'-0"	3'-1"	2'-5"
#7	2'-9"	2'-2"	1'-5"	1'-2"	3'-7"	2'-9"
#8	3'-2"	2'-5"	1'-7"	1'-4"	4'-1"	3'-2"
#9	3'-11"	3'-0"	1'-10"	1'-7"	5'-1"	3'-11"
#10	4'-10"	3'-9"	2'-1"	1'-10"	6'-3"	4'-10"
#11	5'-9"	4'-5"	2'-3"	2'-0"	7'-6"	5'-9"

6) NO BACKFILL SHALL BE PLACED AGAINST ANY STRUCTURAL WALLS UNTIL WALLS HAVE ATTAINED THE SPECIFIED 28 DAY COMPRESSIVE STRENGTH.

7) HORIZONTAL AND VERTICAL CONSTRUCTION JOINTS SHOWN ON THE PLANS ARE RECOMMENDED. ANY DEVIATION FROM CONSTRUCTION JOINTS INDICATED ON THE DRAWINGS SHALL BE SUBMITTED TO THE ENGINEER FOR APPROVAL PRIOR TO CONSTRUCTION.

8) USE TYPE C2 JOINT FOR ALL CONSTRUCTION JOINTS IN WALL AND SLABS BELOW GRADE AND WALLS WHICH SEPARATE AREAS OF SOIL OR LIQUID FROM PERMANENTLY DRY AREAS SUCH AS TUNNELS, GALLERIES, BASEMENT ROOMS, ETC. USE TYPE C1 JOINT AT ALL OTHER CONSTRUCTION JOINTS, UNLESS OTHERWISE NOTED ON THE DRAWINGS.

9) CONCRETE WALLS AND PARTITIONS SHALL BE POURED IN MAXIMUM LENGTHS OF 40 FEET BETWEEN VERTICAL CONSTRUCTION JOINTS.

10) ALL CONCRETE SLABS OVER 8" IN THICKNESS, REINFORCED WITH BARS, AND POURED AGAINST SOIL SHALL BE POURED IN A STRIP PATTERN OF 40 FEET OR LESS IN EACH DIRECTION.

11) ANY STOP IN FRAMED CONCRETE WORK MUST BE MADE IN THE CENTER OF THE SPAN AND INCORPORATE AN APPROVED KEYWAY. REINFORCEMENT SHALL EXTEND THROUGH THESE JOINTS IF REQUIRED FOR CONTINUITY.

12) REFER TO ARCHITECTURAL, PROCESS, MECHANICAL, AND ELECTRICAL DRAWINGS FOR ALL SLEEVES, PIPES, CONDUITS AND MISCELLANEOUS ANCHORING DEVICES TO BE INCORPORATED IN THE CONSTRUCTION.

13) WHERE PROPOSED CONCRETE IS IN CONTACT WITH EXISTING CONCRETE, CONTRACTOR SHALL ROUGHEN THE EXISTING CONCRETE SURFACE TO A MINIMUM ¼" AMPLITUDE.

14) CONCRETE COVER FOR REINFORCING BARS SHALL BE AS FOLLOWS UNLESS OTHERWISE INDICATED ON THE PLANS OR DIRECTED BY THE ENGINEER.

SLABS		
	TOP & BOTTOM OF FORMED SLABS	2"
	SURFACE IN CONTACT WITH LIQUID	2"
	BOTTOM OF SLABS ON FILL OR SOIL	3"
FOOTINGS		
	TOP & FORMED FOOTINGS	2"
	BOTTOM & UNFORMED SIDES	3"
WALLS		
	LESS THAN 12" THICKNESS	1 ½"
	12" OR OVER IN THICKNESS	2"
BEAMS & GIRDERS		
	STIRRUPS	2"
	PRINCIPAL REINFORCEMENT	2 ½"
COLUMNS		
	TIES	2"
	VERTICAL REINFORCEMENT	2 ½"

15) ALL EXPOSED EDGES SHALL BE CAST WITH A ¾" CHAMFER UNLESS MASONRY OR OTHER MEMBERS ARE ERECTED FLUSH WITH THEM; OR NOTED OTHERWISE ON THE DRAWINGS.

16) CONTRACTOR TO PROVIDE ENGINEER SHOP DRAWINGS SHOWING REINFORCING LAYOUT, BAR SIZES AND DIMENSIONS.

FOUNDATIONS

1) ALLOWABLE SOIL BEARING PRESSURE, EXCAVATION AND BACKFILL FOR FOUNDATIONS AND STRUCTURES SHALL BE AS RECOMMENDED IN THE GEOTECHNICAL REPORT IF PROVIDED.

2) ALL EXCAVATIONS SHALL BE CARRIED OUT IN THE DRY, AND PROVISIONS SHALL BE MADE TO PREVENT THE BOTTOM OF ALL EXCAVATIONS FROM FREEZING OR FLOODING AT ALL TIMES.

3) ALL FOUNDATIONS SHALL BE CONSTRUCTED IN EXCAVATIONS FREE OF STANDING WATER.

4) BACKFILL MATERIAL, PLACING AND COMPACTION OF BACKFILL SHALL BE IN ACCORDANCE WITH THE DRAWINGS, AND THE CONTRACT SPECIFICATIONS, ALONG WITH CITY SPECIFICATIONS.

STRUCTURAL STEEL

1) STRUCTURAL STEEL SHALL CONFORM TO THE LATEST AISC "SPECIFICATION FOR THE DESIGN, FABRICATION, AND ERECTION OF STRUCTURAL STEEL FOR BUILDINGS."

2) ELEVATIONS OF STEEL BEAMS SHOWN ON FRAMING PLANS REFER TO TOP OF FLANGE UNLESS NOTED OTHERWISE.

3) ALL BOLTED CONNECTIONS SHALL BE MADE WITH ¾" DIAMETER ASTM F3125 GRADE A325 BOLTS EXCEPT AS OTHERWISE SHOWN OR NOTED.

4) FIELD CONNECTIONS SHALL BE BOLTED, EXCEPT AS OTHERWISE SHOWN OR NOTED.

5) ALL WELDING SHALL CONFORM TO THE LATEST SPECIFICATION OF THE AMERICAN WELDING SOCIETY. ALL WELDED CONNECTIONS SHALL BE MADE WITH AWS A5.1 OR A5.5 E70 XX ELECTRODE.

6) ANCHOR BOLTS AND MISCELLANEOUS EMBEDDED STEEL SHALL BE HOT DIPPED GALVANIZED. ANCHOR BOLTS, WHICH ARE SUBMERGED, LOCATED ABOVE LIQUID SURFACE, OR ARE IN CORROSIVE ATMOSPHERE SHALL BE 316 STAINLESS STEEL.

7) ALL EQUIPMENT ANCHOR BOLTS, DIMENSIONS AND LOCATIONS SHALL BE VERIFIED FROM CERTIFIED VENDOR DRAWINGS, PRIOR TO CONSTRUCTION.

8) ALL EXPOSED FERROUS METAL SHALL BE HOT DIPPED GALVANIZED AFTER FABRICATION.

9) CONTRACTOR TO PROVIDE ENGINEER SHOP DRAWINGS SHOWING STEEL FABRICATION DETAILS AND DIMENSIONS.

10) UNLESS NOTED OTHERWISE, STEEL SECTIONS SHALL BE AS FOLLOWS:

APPLICABLE ASTM SPECIFICATIONS FOR STRUCTURAL SHAPES		
SECTION	STANDARD	YIELD
ALL WIDE FLANGES	ASTM A992	Fy = 50 KSI
ALL CHANNELS	ASTM A36	Fy = 36 KSI
ALL PLATE, ANGLES & TIE RODS	ASTM A36	Fy = 36 KSI
RECTANGULAR HSS	ASTM A500 GR. B	Fy = 46 KSI
ROUND HSS	ASTM A500 GR. B	Fy = 42 KSI
PIPE	ASTM A53 GR. B	Fy = 35 KSI

HIGHER GRADES OF STEEL MAY BE SUBSTITUTED IF APPROVED BY THE ENGINEER

11) DIMENSION LINES TO STEEL SECTIONS USE THE FOLLOWING CONVENTIONS:

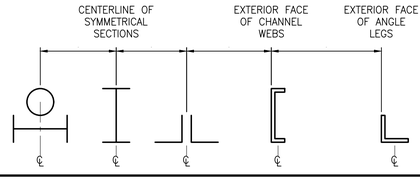

STEEL BAR GRATING

1) ALL METAL BAR GRATING SHALL BE IN COMPLIANCE WITH THE ANSI/NAAMM METAL BAR GRATING MANUAL MBG 531-17 AND THE SPECIFICATIONS SET FORTH THEREIN.

2) METAL BAR GRATING WELDS SHALL BE IN COMPLIANCE WITH THE ANSI/NAAMM WELDING STANDARDS FOR FABRICATION OF STEEL, STAINLESS STEEL AND ALUMINUM BAR GRATING MBG 533-09.

3) ALL METAL GRATING IS TO BE HOT DIPPED GALVANIZED PER ASTM A123 AFTER FABRICATION UNLESS NOTED OTHERWISE.

4) ALL METAL BAR GRATING SHALL HAVE A STANDARD TRIM BAND UNLESS NOTED OTHERWISE.

5) ALL CUTOUTS WHERE MORE THAN ONE BEARING BAR IS CUT AND BEARING BARS ARE NOT SUPPORTED SHALL BE LOAD BANDED.

6) IF MORE THAN 1 INCH OF CLEAR SPACE EXISTS BETWEEN A GRATING OPENING AND PENETRATING ITEM, THEN BANDING SHOULD BE 1/4 INCH X 5 INCH TOE PLATE UNLESS NOTED OTHERWISE.

7) GRATING ANCHORAGES AND ATTACHMENT CLIPS TO BE PER MANUFACTURERS SPECIFICATIONS.

8) CONTRACTOR TO PROVIDE ENGINEER SHOP DRAWINGS SHOWING GRATING PANEL LAYOUT, IDENTIFICATION OF REMOVABLE VERSUS FIXED PANELS, DIRECTION OF SPANS, AND FASTENER TYPES.

PROJECT BENCHMARK

CITY OF SUGAR LAND FLOODPLAIN REFERENCE MONUMENT SGR-RM 006: A BRASS DISK STAMPED "RM 006" SET IN CONCRETE AT THE SOUTHWEST CORNER OF A CONCRETE SLAB FOR A SANITARY SEWER LIFT STATION LOCATED AT THE SOUTH SIDE OF LEXINGTON BLVD. THE POINT IS LOCATED +/- 850 WEST OF THE INTERESECTION OF LEXINGTON BLVD AND AUSTIN PARKWAY.

ELEVATION = 67.85 FEET NAVD88 2001 ADJ.

SURF. COORD. N:13778271.570 & E:3041366.199

SITE TBM1

TBM-FBCLID2_MON3: A BRASS DISK STAMPED "FBCLID2 MON3" SET IN CONCRETE AT PUMP STATION "A". THE POINT IS LOCATED +/- 350 FEET SOUTH OF THE INTERSECTION OF GREYSTONE WAY AND APRIL MEADOWS WAY.

ELEVATION = 79.25 FEET NAVD88 2001 ADJ.

SURF. COORD. N:13774180.945 & E:3037455.324

SITE TBM2

TBM-FBCLID2_MON4: A BRASS DISK STAMPED "FBCLID2 MON4" SET IN CONCRETE AT THE SOUTH SIDE OF THE AUSTIN PARKWAY BRIDGE OVER DITCH "D1".

ELEVATION = 66.90 FEET NAVD88 2001 ADJ.

SURF. COORD. N:13778125.686 & E:3043056.435

SITE TBM3

TBM-FBCLID2_MON6: A BRASS DISK STAMPED "FBCLID2 MON6" SET IN CONCRETE AT THE SOUTH SIDE OF THE AUSTIN PARKWAY BRIDGE OVER DITCH "C".

ELEVATION = 68.82 FEET NAVD88 2001 ADJ.

SURF. COORD. N:13774026.396 & E:3047357.625

NOTES:

RECORD DRAWING

I HEREBY CERTIFY THAT THIS DRAWING REFLECTS THE IMPROVEMENTS CONSTRUCTED AS TO SIZE, LOCATION, AND GRADE; AND THAT THE CONSTRUCTION WAS IN SUBSTANTIAL COMPLIANCE WITH THE CONTRACT DOCUMENTS.

CONTRACTOR:_____ DATE:_____

TITLE:_____

DATE	REVISION	BY

5/20/24

STATE OF TEXAS
NIKOLAS A. KALOS
124916
LICENSED
PROFESSIONAL ENGINEER

FORT BEND COUNTY L.I.D NO. 14

STRUCTURAL GENERAL NOTES

S-1

LJA Engineering, Inc.
1904 W. Grand Parkway North
Suite 100
Katy, Texas 77449
Phone 713.953.5200
Fax 713.953.5026
FRN-F-1386

LJA PROJECT NO.: 1301-1413

DRAWN: WK DESIGN: MK DATE: DEC 2023

SCALE: AS SHOWN

SHEET NO. S1 OF S11

PUMP STATION UPGRADE AND REPLACEMENT - JOB NO. 1301-1413

ADDENDUM NO. 1

Date\Time = Mon, 20 May, 2024 - 1:13pm User Name = wkramer
Path\Name = I:\Projects\1301.1413\Structural\CAD\Sheet_Files\S1 STRUCTURAL GENERAL NOTES.dwg

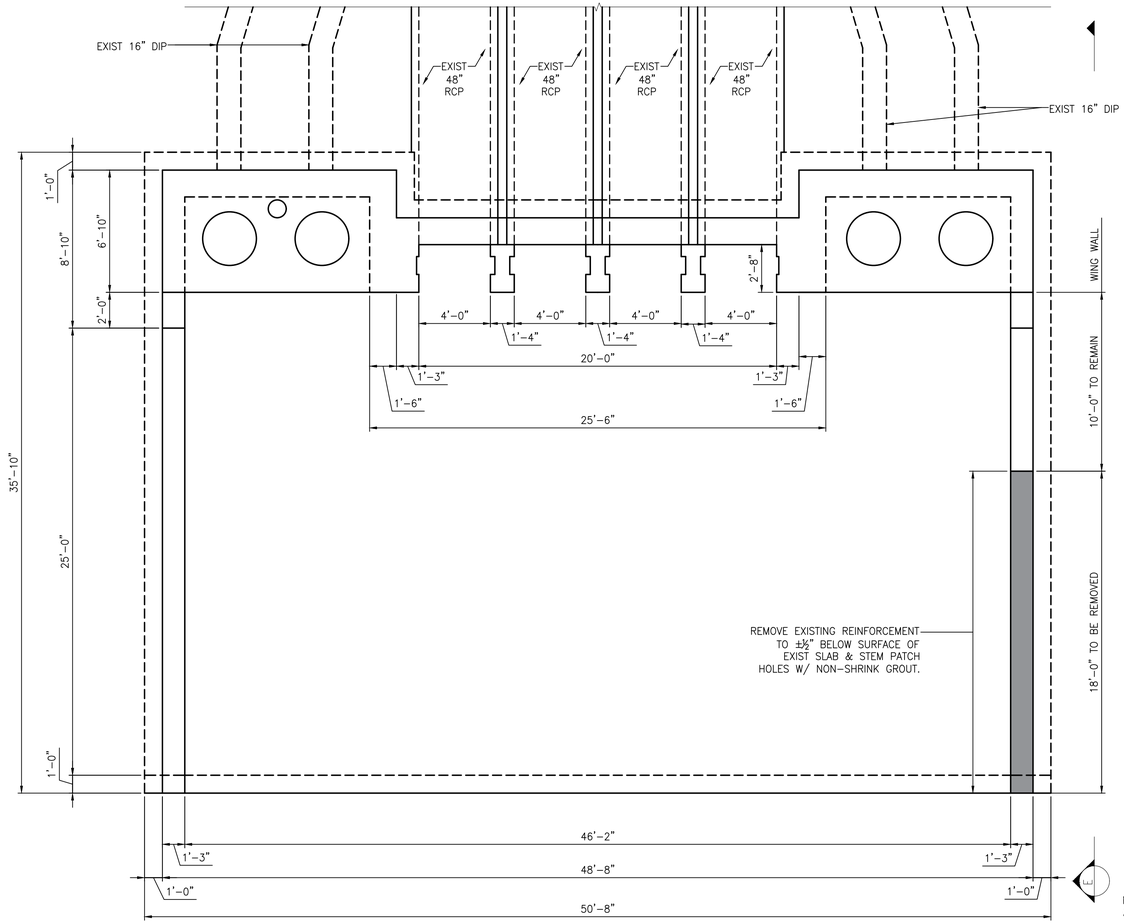

B PLAN VIEW
NTS

LIMITS OF REMOVAL

NOTE: DIMENSIONS ARE TAKEN FROM THE AS-BUILT AND ARE APPROXIMATE.

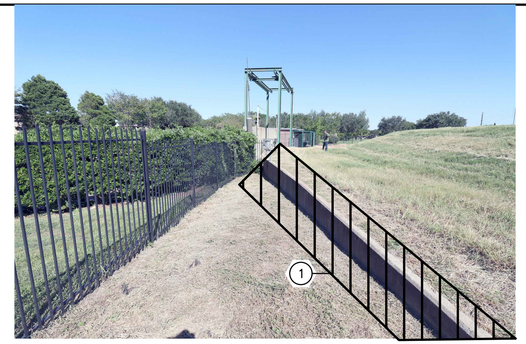

DEMOLITION REGION

(1) UPPER RETAINING WALL TO BE REMOVED.

A DEMOLITION DETAILS – UPPER RETAINING WALL
NTS

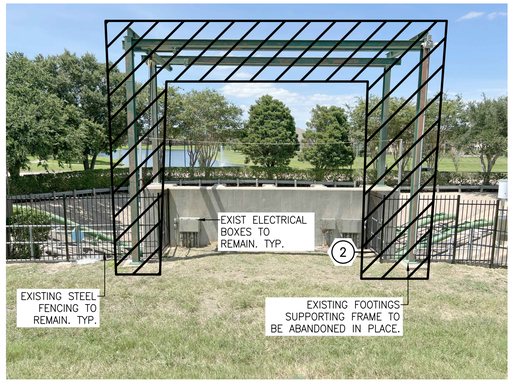

DEMOLITION REGION

(2) STEEL FRAMEWORK FOR STOPLOG HOIST TO BE DEMOLISHED AND HAULED OFF.
ANCHOR BOLTS FOR FRAME BASEPLATES TO BE CUT OFF & GROUND FLUSH WITH TOP OF CONCRETE.

C DEMOLITION DETAILS – STEEL FRAMEWORKS
NTS

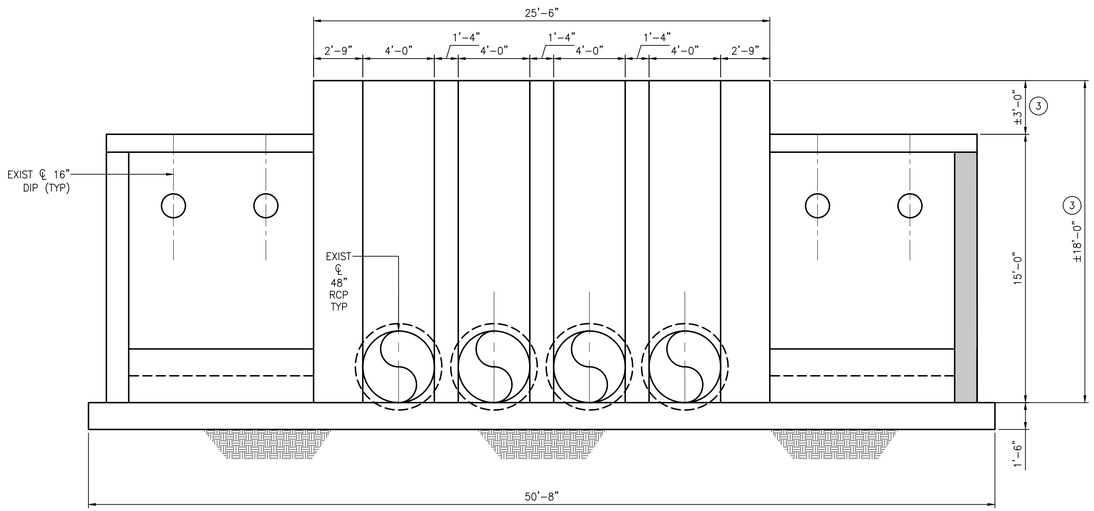

D ELEVATION VIEW
NTS

(3) BASED ON FIELD MEASUREMENTS. AS-BUILT PLANS FOR RAISED HEADWALL NOT AVAILABLE

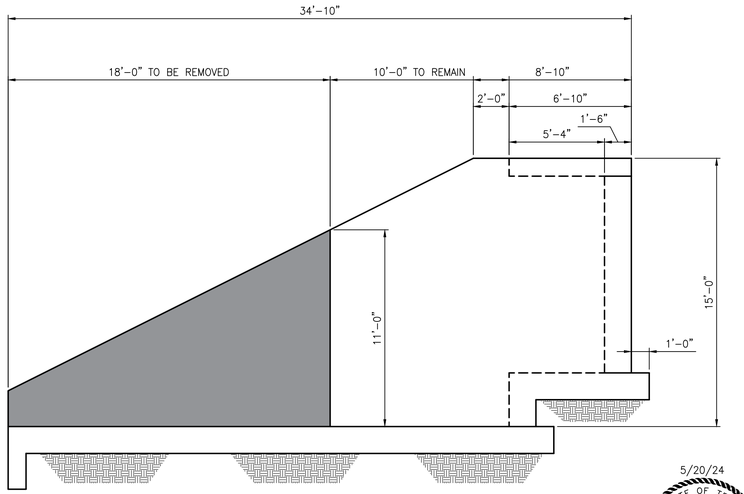

E SECTION E-E
NTS

PROJECT BENCHMARK
CITY OF SUGAR LAND FLOODPLAIN REFERENCE MONUMENT SGR-RM 006: A BRASS DISK STAMPED "RM 006" SET IN CONCRETE AT THE SOUTHWEST CORNER OF A CONCRETE SLAB FOR A SANITARY SEWER LIFT STATION LOCATED AT THE SOUTH SIDE OF LEXINGTON BLVD. THE POINT IS LOCATED +/- 850 WEST OF THE INTERESECTION OF LEXINGTON BLVD AND AUSTIN PARKWAY.
ELEVATION = 67.85 FEET NAVD88 2001 ADJ.
SURF. COORD. N:13778271.570 & E:3041366.199

SITE TBM1
TBM-FBCLID2_MON3: A BRASS DISK STAMPED "FBCLID2 MON3" SET IN CONCRETE AT PUMP STATION "A". THE POINT IS LOCATED +/- 350 FEET SOUTH OF THE INTERSECTION OF GREYSTONE WAY AND APRIL MEADOWS WAY.
ELEVATION = 79.25 FEET NAVD88 2001 ADJ.
SURF. COORD. N:13774180.945 & E:3037455.324

SITE TBM2
TBM-FBCLID2_MON4: A BRASS DISK STAMPED "FBCLID2 MON4" SET IN CONCRETE AT THE SOUTH SIDE OF THE AUSTIN PARKWAY BRIDGE OVER DITCH "D1".
ELEVATION = 66.90 FEET NAVD88 2001 ADJ.
SURF. COORD. N:13778125.686 & E:3043056.435

SITE TBM3
TBM-FBCLID2_MON6: A BRASS DISK STAMPED "FBCLID2 MON6" SET IN CONCRETE AT THE SOUTH SIDE OF THE AUSTIN PARKWAY BRIDGE OVER DITCH "C".
ELEVATION = 68.82 FEET NAVD88 2001 ADJ.
SURF. COORD. N:13774026.396 & E:3047357.625

NOTES:

RECORD DRAWING
I HEREBY CERTIFY THAT THIS DRAWING REFLECTS THE IMPROVEMENTS CONSTRUCTED AS TO SIZE, LOCATION, AND GRADE; AND THAT THE CONSTRUCTION WAS IN SUBSTANTIAL COMPLIANCE WITH THE CONTRACT DOCUMENTS.
CONTRACTOR: _____ DATE: _____
TITLE: _____

DATE	REVISION	BY

FORT BEND COUNTY L.I.D NO. 14

EXISTING OUTFALL STRUCTURE & DEMOLITION

S-2

5/20/24
STATE OF TEXAS
NIKOLAS A. KALOS
124916
LICENSED
PROFESSIONAL ENGINEER

LJA Engineering, Inc.
1904 W. Grand Parkway North
Suite 100
Katy, Texas 77449
Phone 713.953.5200
Fax 713.953.5026
FRN-F-1386

LJA PROJECT NO.: 1301-1413

DRAWN: WK DESIGN: MK DATE: DEC 2023

SCALE: AS SHOWN

SHEET NO. S2 OF S11

ADDENDUM NO. 1

PUMP STATION UPGRADE AND REPLACEMENT – JOB NO. 1301-1413

Date\Time : Mon, 20 May 2024 - 11:13pm User Name : wkramer
Path\Name : I:\Projects\1301\14.13\Structural\Cad\S_Sheet_Files\S2 EXISTING OUTFALL STRUCTURE & DEMOLITION.dwg

IMPORTANT NOTE: MODIFICATIONS TO THE DISCHARGE HEADWALL LOCATED OUTSIDE THE LEVEE ARE SHOWN ON SHEET S6.

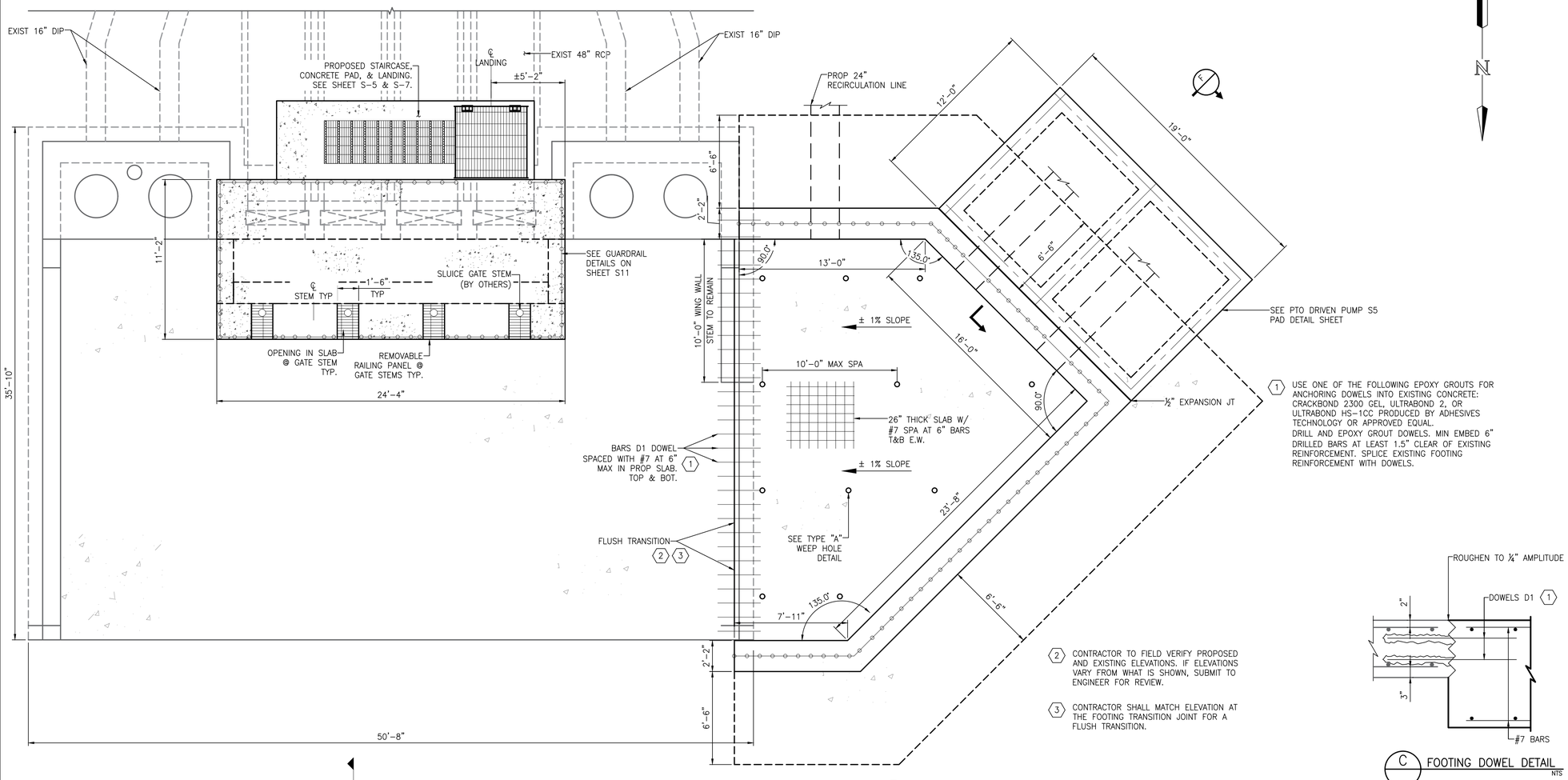

1 USE ONE OF THE FOLLOWING EPOXY GROUTS FOR ANCHORING DOWELS INTO EXISTING CONCRETE: CRACKBOND 2300 GEL, ULTRABOND 2, OR ULTRABOND HS-1CC PRODUCED BY ADHESIVES TECHNOLOGY OR APPROVED EQUAL. DRILL AND EPOXY GROUT DOWELS. MIN EMBED 6" DRILLED BARS AT LEAST 1.5" CLEAR OF EXISTING REINFORCEMENT. SPLICE EXISTING FOOTING REINFORCEMENT WITH DOWELS.

2 CONTRACTOR TO FIELD VERIFY PROPOSED AND EXISTING ELEVATIONS. IF ELEVATIONS VARY FROM WHAT IS SHOWN, SUBMIT TO ENGINEER FOR REVIEW.

3 CONTRACTOR SHALL MATCH ELEVATION AT THE FOOTING TRANSITION JOINT FOR A FLUSH TRANSITION.

C FOOTING DOWEL DETAIL
NTS

A PLAN VIEW
NTS

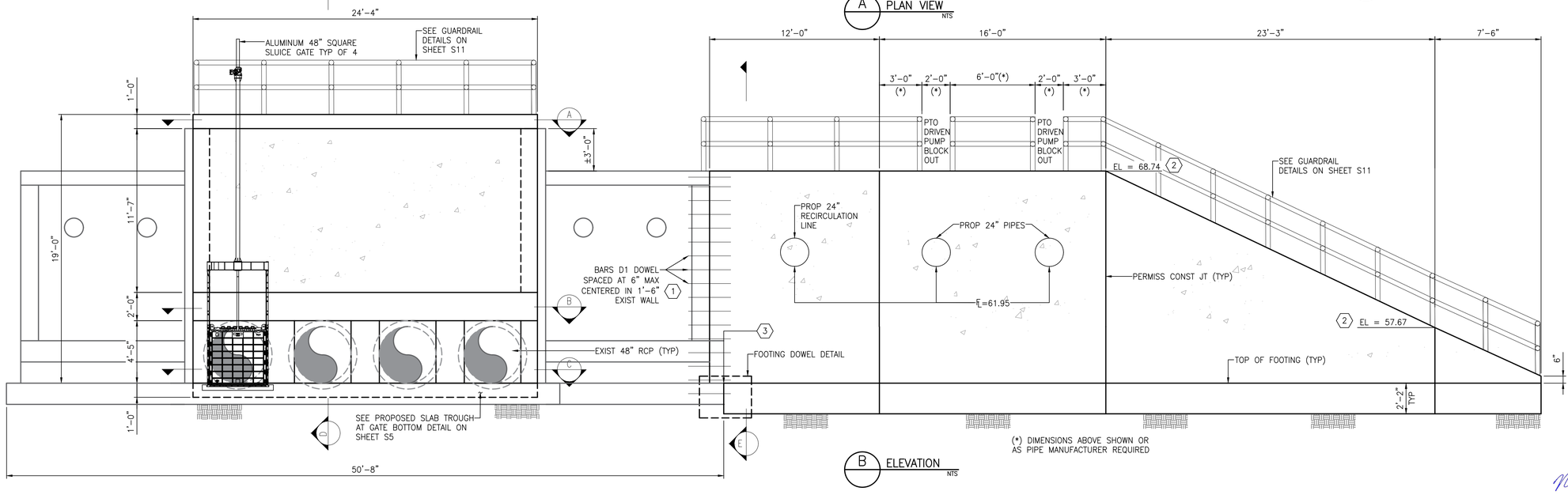

(*) DIMENSIONS ABOVE SHOWN OR AS PIPE MANUFACTURER REQUIRED

B ELEVATION
NTS

PROJECT BENCHMARK
CITY OF SUGAR LAND FLOODPLAIN REFERENCE MONUMENT SGR-RM 006: A BRASS DISK STAMPED "RM 006" SET IN CONCRETE AT THE SOUTHWEST CORNER OF A CONCRETE SLAB FOR A SANITARY SEWER LIFT STATION LOCATED AT THE SOUTH SIDE OF LEXINGTON BLVD. THE POINT IS LOCATED +/- 850 WEST OF THE INTERESECTION OF LEXINGTON BLVD AND AUSTIN PARKWAY.
ELEVATION = 67.85 FEET NAVD88 2001 ADJ.
SURF. COORD. N:13778271.570 & E:3041366.199

SITE TBM1
TBM-FBCLID2_MON3: A BRASS DISK STAMPED "FBCLID2 MON3" SET IN CONCRETE AT PUMP STATION "A". THE POINT IS LOCATED +/- 350 FEET SOUTH OF THE INTERSECTION OF GREYSTONE WAY AND APRIL MEADOWS WAY.
ELEVATION = 79.25 FEET NAVD88 2001 ADJ.
SURF. COORD. N:13774180.945 & E:3037455.324

SITE TBM2
TBM-FBCLID2_MON4: A BRASS DISK STAMPED "FBCLID2 MON4" SET IN CONCRETE AT THE SOUTH SIDE OF THE AUSTIN PARKWAY BRIDGE OVER DITCH "D1".
ELEVATION = 66.90 FEET NAVD88 2001 ADJ.
SURF. COORD. N:13778125.686 & E:3043056.435

SITE TBM3
TBM-FBCLID2_MON6: A BRASS DISK STAMPED "FBCLID2 MON6" SET IN CONCRETE AT THE SOUTH SIDE OF THE AUSTIN PARKWAY BRIDGE OVER DITCH "C".
ELEVATION = 68.82 FEET NAVD88 2001 ADJ.
SURF. COORD. N:13774026.396 & E:3047357.625

NOTES:

RECORD DRAWING
I HEREBY CERTIFY THAT THIS DRAWING REFLECTS THE IMPROVEMENTS CONSTRUCTED AS TO SIZE, LOCATION, AND GRADE; AND THAT THE CONSTRUCTION WAS IN SUBSTANTIAL COMPLIANCE WITH THE CONTRACT DOCUMENTS.

CONTRACTOR:_____ DATE:_____

TITLE:_____

DATE	REVISION	BY

FORT BEND COUNTY L.I.D NO. 14

PROPOSED OUTFALL MODIFICATIONS

(SHEET 1 OF 4) **S-3**

LJA Engineering, Inc.
1904 W. Grand Parkway North
Suite 100
Katy, Texas 77449
Phone 713.953.5200
Fax 713.953.5026
FRN-F-1386

LJA PROJECT NO.: 1301-1413

DRAWN: WK DESIGN: MK DATE: DEC 2023

SCALE: AS SHOWN

SHEET NO. S3 OF S11

5/20/24
STATE OF TEXAS
NIKOLAS A. KALOS
124916
LICENSED PROFESSIONAL ENGINEER

PUMP STATION UPGRADE AND REPLACEMENT - JOB NO. 1301-1413

ADDENDUM NO. 1

Date\Time = Mon, 20 May, 2024 - 1:14pm User Name = wkramer
Path\Name = I:\Projects\1301.14\13\Structural\Cad\Sheet_Files\S3 PROPOSED OUTFALL MODIFICATIONS.dwg

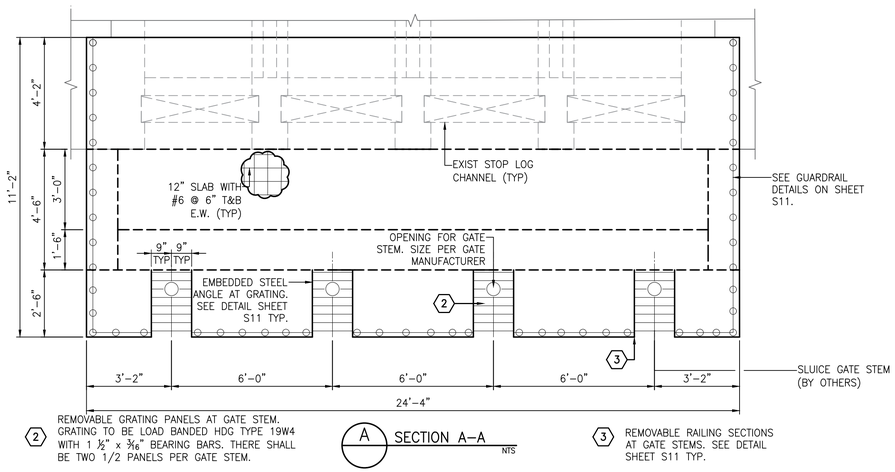

2 REMOVABLE GRATING PANELS AT GATE STEM. GRATING TO BE LOAD BANDED HDG TYPE 19W4 WITH 1 ½" x 3/16" BEARING BARS. THERE SHALL BE TWO 1/2 PANELS PER GATE STEM.

SEE GRATING PLATE SUPPORT DETAIL ON SHEET S11

A SECTION A-A NTS

3 REMOVABLE RAILING SECTIONS AT GATE STEMS. SEE DETAIL SHEET S11 TYP.

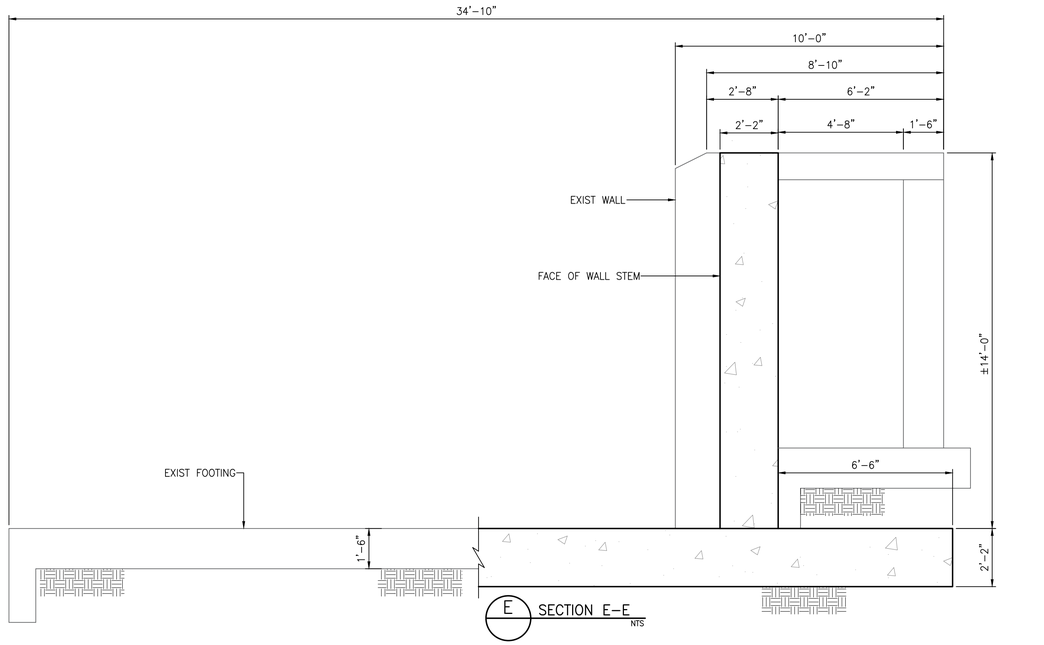

E SECTION E-E NTS

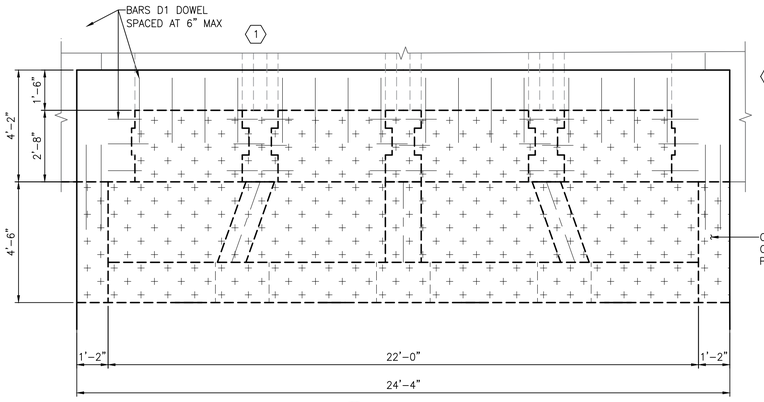

1 USE ONE OF THE FOLLOWING EPOXY GROUTS FOR ANCHORING DOWELS INTO EXISTING CONCRETE: CRACKBC 2300 GEL, ULTRABOND 2, OR ULTRABOND HS-1CC PRODUCED BY ADHESIVES TECHNOLOGY OR APPROVED EQUAL. DRILL AND EPOXY GROUT DOWELS. MIN EMBED 6" DRILLED BARS AT LEAST 1.5" CLEAR OF EXISTING REINFORCEMENT. SPLICE EXISTING FOOTING REINFORCEME WITH DOWELS.

CONCRETE CLOSURE POUR

CONCRETE CLOSURE POUR

B SECTION B-B NTS

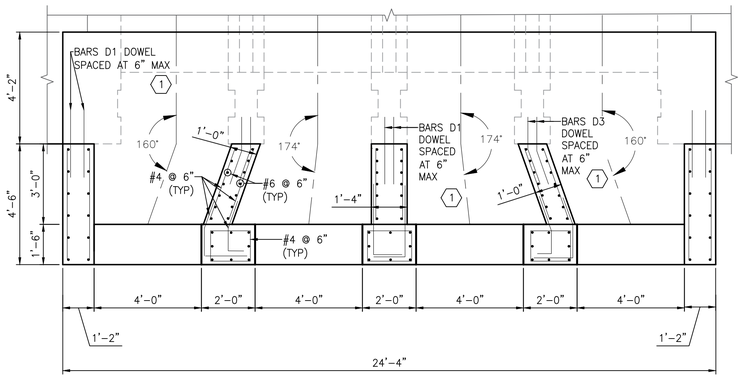

C SECTION C-C NTS

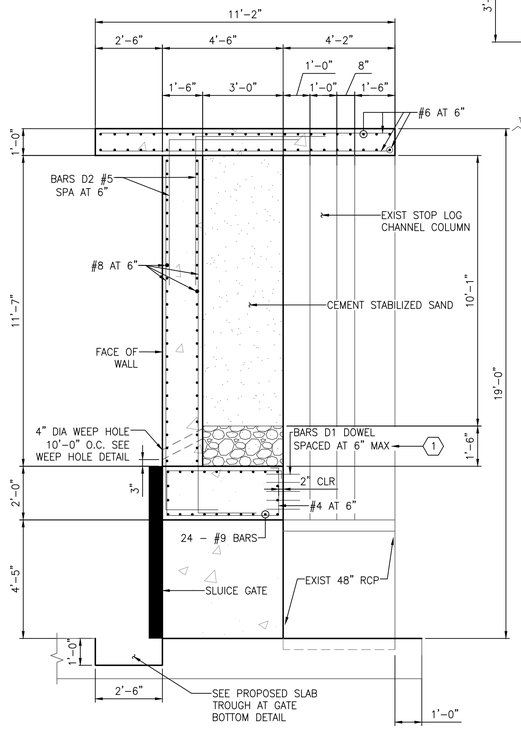

D SECTION D-D NTS

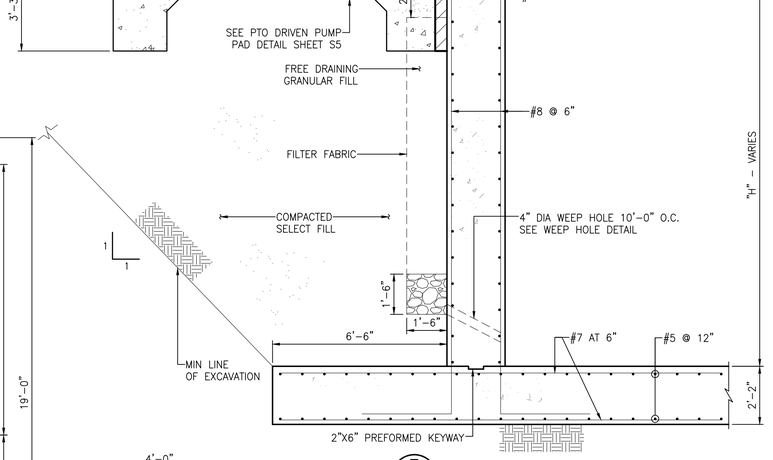

F HEAD WALL TYPICAL SECTION NTS

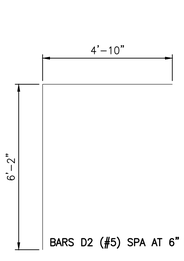

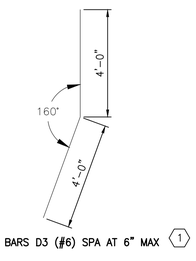

PROJECT BENCHMARK

CITY OF SUGAR LAND FLOODPLAIN REFERENCE MONUMENT SGR-RM 006: A BRASS DISK STAMPED "RM 006" SET IN CONCRETE AT THE SOUTHWEST CORNER OF A CONCRETE SLAB FOR A SANITARY SEWER LIFT STATION LOCATED AT THE SOUTH SIDE OF LEXINGTON BLVD. THE POINT IS LOCATED +/- 850 WEST OF THE INTERESECTION OF LEXINGTON BLVD AND AUSTIN PARKWAY.

ELEVATION = 67.85 FEET NAVD88 2001 ADJ.

SURF. COORD. N:13778271.570 & E:3041366.199

SITE TBM1

TBM-FBCLID2_MON3: A BRASS DISK STAMPED "FBCLID2 MON3" SET IN CONCRETE AT PUMP STATION "A". THE POINT IS LOCATED +/- 350 FEET SOUTH OF THE INTERSECTION OF GREYSTONE WAY AND APRIL MEADOWS WAY.

ELEVATION = 79.25 FEET NAVD88 2001 ADJ.

SURF. COORD. N:13774180.945 & E:3037455.324

SITE TBM2

TBM-FBCLID2_MON4: A BRASS DISK STAMPED "FBCLID2 MON4" SET IN CONCRETE AT THE SOUTH SIDE OF THE AUSTIN PARKWAY BRIDGE OVER DITCH "D1".

ELEVATION = 66.90 FEET NAVD88 2001 ADJ.

SURF. COORD. N:13778125.686 & E:3043056.435

SITE TBM3

TBM-FBCLID2_MON6: A BRASS DISK STAMPED "FBCLID2 MON6" SET IN CONCRETE AT THE SOUTH SIDE OF THE AUSTIN PARKWAY BRIDGE OVER DITCH "C".

ELEVATION = 68.82 FEET NAVD88 2001 ADJ.

SURF. COORD. N:13774026.396 & E:3047357.625

NOTES:

RECORD DRAWING

I HEREBY CERTIFY THAT THIS DRAWING REFLECTS THE IMPROVEMENTS CONSTRUCTED AS TO SIZE, LOCATION, AND GRADE; AND THAT THE CONSTRUCTION WAS IN SUBSTANTIAL COMPLIANCE WITH THE CONTRACT DOCUMENTS.

CONTRACTOR: _____ DATE: _____

TITLE: _____

DATE	REVISION	BY

FORT BEND COUNTY L.I.D NO. 14

PROPOSED OUTFALL MODIFICATIONS

(SHEET 2 OF 4) **S-4**

LJA Engineering, Inc.
1904 W. Grand Parkway North
Suite 100
Katy, Texas 77449
Phone 713.953.5200
Fax 713.953.5026
FRN-F-1386

LJA PROJECT NO.: 1301-1413

DRAWN: WK DESIGN: MK DATE: DEC 2023

SCALE: AS SHOWN

SHEET NO. S4 OF S11

5/20/24

STATE OF TEXAS
NIKOLAS A. KALOS
124916
LICENSED
PROFESSIONAL ENGINEER

PUMP STATION UPGRADE AND REPLACEMENT - JOB NO. 1301-1413

ADDENDUM NO. 1

Date\Time : Mon, 20 May 2024 - 1:14pm User Name : wkramer
Path\Name : L:\Projects\1301\1413\Structural\CAD_Sheet_Files\S4 PROPOSED OUTFALL MODIFICATIONS.dwg

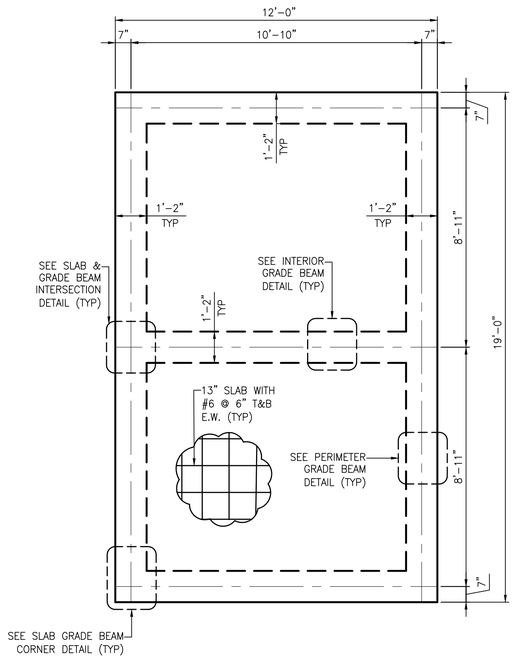

B PTO DRIVEN PUMP PAD DETAIL
NTS

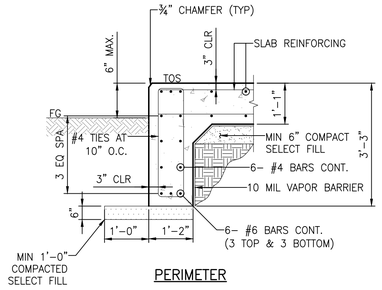

PERIMETER

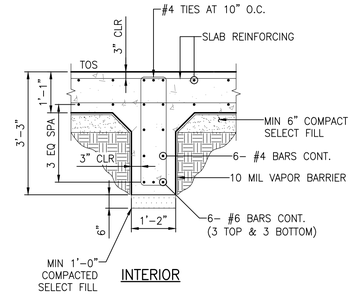

INTERIOR

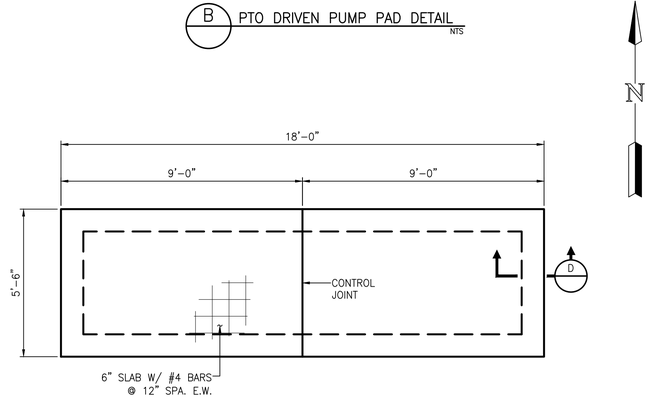

C STAIRCASE PAD
NTS

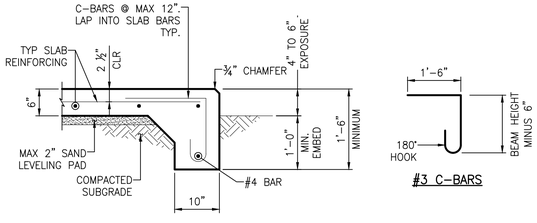

#3 C-BARS

D STAIRCASE PAD – TYPICAL SLAB EDGE
NTS

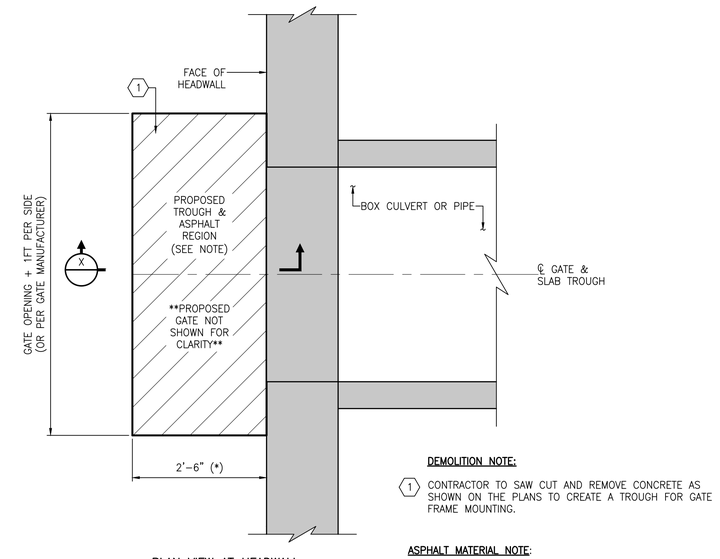

PLAN VIEW AT HEADWALL

DEMOLITION NOTE:

1. CONTRACTOR TO SAW CUT AND REMOVE CONCRETE AS SHOWN ON THE PLANS TO CREATE A TROUGH FOR GATE FRAME MOUNTING.

ASPHALT MATERIAL NOTE:

1. ASPHALT TO BE COMPLIANT WITH TxDOT'S DEPARTMENT OF MATERIAL SPECIFICATON DMS-9202, OR BE ON THE TxDOT PRE-APPROVED LIST FOR ASPHALTIC CONCRETE PATCHING MATERIAL.
2. CONTRACTOR TO SUBMIT SELECTED PATCHING MATERIAL FOR ENGINEER'S REVIEW PRIOR TO PLACEMENT.

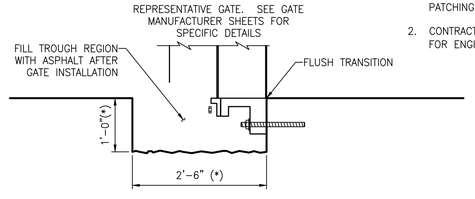

(*) – DIMENSION AS SHOWN, OR AS REQUIRED BY GATE MANUFACTURER.

SECTION X – TROUGH AT HEADWALL

A PROPOSED SLAB TROUGH AT GATE BOTTOM
NTS

PROJECT BENCHMARK

CITY OF SUGAR LAND FLOODPLAIN REFERENCE MONUMENT SGR-RM 006: A BRASS DISK STAMPED "RM 006" SET IN CONCRETE AT THE SOUTHWEST CORNER OF A CONCRETE SLAB FOR A SANITARY SEWER LIFT STATION LOCATED AT THE SOUTH SIDE OF LEXINGTON BLVD. THE POINT IS LOCATED +/- 850 WEST OF THE INTERESECTION OF LEXINGTON BLVD AND AUSTIN PARKWAY.

ELEVATION = 67.85 FEET NAVD88 2001 ADJ.

SURF. COORD. N:13778271.570 & E:3041366.199

SITE TBM1

TBM-FBCLID2_MON3: A BRASS DISK STAMPED "FBCLID2 MON3" SET IN CONCRETE AT PUMP STATION "A". THE POINT IS LOCATED +/- 350 FEET SOUTH OF THE INTERSECTION OF GREYSTONE WAY AND APRIL MEADOWS WAY.

ELEVATION = 79.25 FEET NAVD88 2001 ADJ.

SURF. COORD. N:13774180.945 & E:3037455.324

SITE TBM2

TBM-FBCLID2_MON4: A BRASS DISK STAMPED "FBCLID2 MON4" SET IN CONCRETE AT THE SOUTH SIDE OF THE AUSTIN PARKWAY BRIDGE OVER DITCH "D1".

ELEVATION = 66.90 FEET NAVD88 2001 ADJ.

SURF. COORD. N:13778125.686 & E:3043056.435

SITE TBM3

TBM-FBCLID2_MON6: A BRASS DISK STAMPED "FBCLID2 MON6" SET IN CONCRETE AT THE SOUTH SIDE OF THE AUSTIN PARKWAY BRIDGE OVER DITCH "C".

ELEVATION = 68.82 FEET NAVD88 2001 ADJ.

SURF. COORD. N:13774026.396 & E:3047357.625

NOTES:

RECORD DRAWING

I HEREBY CERTIFY THAT THIS DRAWING REFLECTS THE IMPROVEMENTS CONSTRUCTED AS TO SIZE, LOCATION, AND GRADE; AND THAT THE CONSTRUCTION WAS IN SUBSTANTIAL COMPLIANCE WITH THE CONTRACT DOCUMENTS.

CONTRACTOR: _____ DATE: _____

TITLE: _____

DATE	REVISION	BY

FORT BEND COUNTY L.I.D NO. 14

PROPOSED OUTFALL MODIFICATIONS

(SHEET 3 OF 4) **S-5**

LJA Engineering, Inc.
1904 W. Grand Parkway North, Suite 100, Katy, Texas 77449
Phone 713.953.5200 Fax 713.953.5026 FRN-F-1386

LJA PROJECT NO.: 1301-1413

DRAWN: WK DESIGN: MK DATE: DEC 2023

SCALE: AS SHOWN

SHEET NO. S5 OF S11

5/20/24

STATE OF TEXAS
NIKOLAS A. KALOS
124916
LICENSED PROFESSIONAL ENGINEER

PUMP STATION UPGRADE AND REPLACEMENT – JOB NO. 1301-1413

ADDENDUM NO. 1

Date\Time : Mon, 20 May 2024 – 1:14pm User Name : wkramer
Path\Name : I:\Projects\1301\1413\Structural\CAD_Sheet_Files\S5 PROPOSED OUTFALL MODIFICATIONS.dwg

DEMOLITION NOTES:

1. AS REQUIRED, REMOVE & REPLACE-IN-KIND THE WELDED WIRE MESH FENCING WITH WOODEN + STEEL T+POSTS.
2. REMOVE AND HAUL OFF THE EXISTING ALUMINUM RAILING



A DISCHARGE HEADWALL MODIFICATIONS
NTS

CORE DRILL NOTES:

1. CONTRACTOR TO CORE DRILL PROPOSED PIPE OPENINGS.
2. CONTRACTOR TO GROUT ANY ANNULAR AREA AROUND PIPES WITH HIGH STRENGTH NON-SHRINK GROUT.
3. CONTRACTOR TO CORE DRILL OPENINGS FOR THE DISCHARGE PIPE PENETRATIONS. CONTRACTOR TO SUBMIT PENETRATION PLAN, ALONG WITH REPLACEMENT CONCRETE & REINFORCING DETAILS FOR ANY ANNULAR AREA CREATED AROUND THE PIPES.

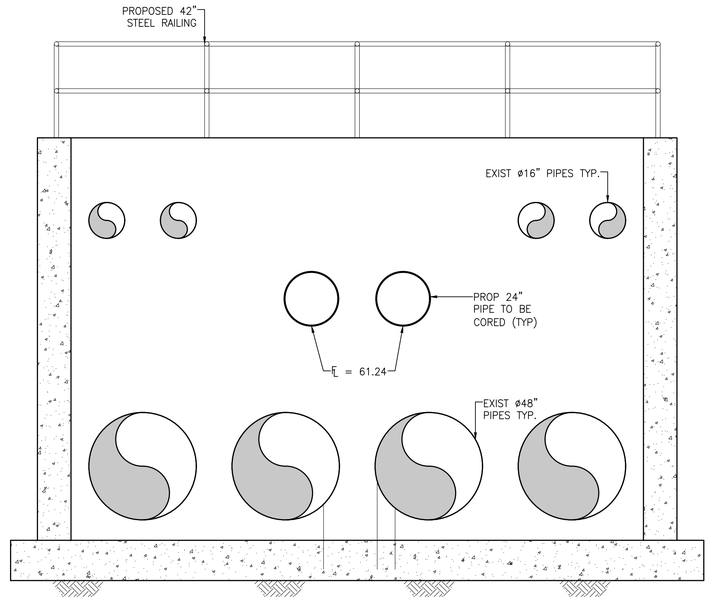

B PROPOSED DISCHARGE HEADWALL ELEVATION
NTS

PROJECT BENCHMARK
CITY OF SUGAR LAND FLOODPLAIN REFERENCE MONUMENT SGR-RM 006: A BRASS DISK STAMPED "RM 006" SET IN CONCRETE AT THE SOUTHWEST CORNER OF A CONCRETE SLAB FOR A SANITARY SEWER LIFT STATION LOCATED AT THE SOUTH SIDE OF LEXINGTON BLVD. THE POINT IS LOCATED +/- 850 WEST OF THE INTERESECTION OF LEXINGTON BLVD AND AUSTIN PARKWAY.
ELEVATION = 67.85 FEET NAVD88 2001 ADJ.
SURF. COORD. N:13778271.570 & E:3041366.199

SITE TBM1
TBM-FBCLID2_MON3: A BRASS DISK STAMPED "FBCLID2 MON3" SET IN CONCRETE AT PUMP STATION "A". THE POINT IS LOCATED +/- 350 FEET SOUTH OF THE INTERSECTION OF GREYSTONE WAY AND APRIL MEADOWS WAY.
ELEVATION = 79.25 FEET NAVD88 2001 ADJ.
SURF. COORD. N:13774180.945 & E:3037455.324

SITE TBM2
TBM-FBCLID2_MON4: A BRASS DISK STAMPED "FBCLID2 MON4" SET IN CONCRETE AT THE SOUTH SIDE OF THE AUSTIN PARKWAY BRIDGE OVER DITCH "D1".
ELEVATION = 66.90 FEET NAVD88 2001 ADJ.
SURF. COORD. N:13778125.686 & E:3043056.435

SITE TBM3
TBM-FBCLID2_MON6: A BRASS DISK STAMPED "FBCLID2 MON6" SET IN CONCRETE AT THE SOUTH SIDE OF THE AUSTIN PARKWAY BRIDGE OVER DITCH "C".
ELEVATION = 68.82 FEET NAVD88 2001 ADJ.
SURF. COORD. N:13774026.396 & E:3047357.625

NOTES:

RECORD DRAWING
I HEREBY CERTIFY THAT THIS DRAWING REFLECTS THE IMPROVEMENTS CONSTRUCTED AS TO SIZE, LOCATION, AND GRADE; AND THAT THE CONSTRUCTION WAS IN SUBSTANTIAL COMPLIANCE WITH THE CONTRACT DOCUMENTS.

CONTRACTOR:_____ DATE:_____
TITLE:_____

DATE	REVISION	BY

FORT BEND COUNTY L.I.D NO. 14

PROPOSED OUTFALL MODIFICATIONS
(SHEET 4 OF 4) S-6

5/20/24
STATE OF TEXAS
NIKOLAS A. KALOS
124916
LICENSED
PROFESSIONAL ENGINEER

LJA Engineering, Inc.
1904 W. Grand Parkway North
Suite 100
Katy, Texas 77449
Phone 713.953.5200
Fax 713.953.5026
FRN-F-1386

LJA PROJECT NO.: 1301-1413
DRAWN: WK DESIGN: MK DATE: DEC 2023
SCALE: AS SHOWN
SHEET NO. S6 OF S11

PUMP STATION UPGRADE AND REPLACEMENT - JOB NO. 1301-1413

ADDENDUM NO. 1

Date\Time : Mon, 20 May 2024 - 1:14pm User Name : wkramer
Path\Name : I:\Projdsk1\1301\1413\Structural\ACAD_Sheet_Files\S6 PROPOSED OUTFALL MODIFICATIONS.dwg

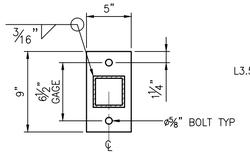

TOP PLATE PLAN

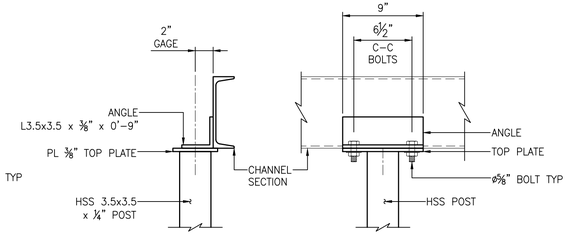

ELEVATION

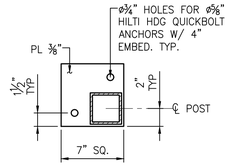

BASEPLATE PLAN

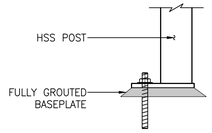

ELEVATION

POST ASSEMBLY NOTES:

1. POST ASSEMBLY TO BE OF WELDED CONSTRUCTION UNLESS NOTED OTHERWISE ON THE PLANS.
2. UNLESS NOTED OTHERWISE, ALL WELDS TO BE ⅜" FILLETS ALL THE WAY AROUND THE CONNECTED ELEMENTS.
3. ASSEMBLY TO BE HOT DIPPED GALVANIZED AFTER FABRICATION.
4. MISCELLANEOUS FABRICATION DETAILS ARE THE RESPONSIBILITY OF THE FABRICATOR AND SHALL CONFORM TO THE AMERICAN INSTITUTE OF STEEL CONSTRUCTOR'S (AISC) DETAILING PRACTICES.

B POST ASSEMBLY DETAILS
NTS

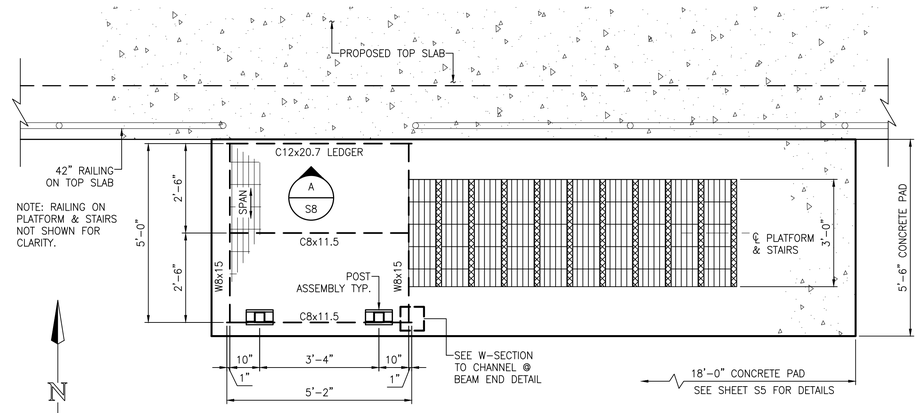

A STAIRCASE – PLAN
NTS

STAIRCASE & PLATFORM NOTES:

1. STAIRCASE TREADS TO BE OSHA COMPLIANT HDG PRE-FABRICATED UNITS WITH A NON SLIP NOSING PIECE. TREADS TO SUPPORT A MINIMUM OF 100 PSF UNIFORM LOADING & A 300 LB POINT LOAD (NOT CONCURRENTLY APPLIED). TREADS TO BE INSTALLED PER THE MANUFACTURER'S INSTRUCTIONS.
2. GRATING ON PLATFORM/LANDING TO BE HDG TYPE 19-4 WITH 1 ½" x 3/16" BEARING BARS.
3. STAIRCASE COMPONENTS SHALL BE WELDED CONSTRUCTION EXCEPT AS SHOWN IN DESIGN DRAWINGS AND/OR THE ATTACHED DETAILS. ALL EXPOSED JOINTS, CONNECTIONS, AND WELDS SHALL BE SURFACED IN A MANNER TO PREVENT INJURY FROM PUNCTURES OR LACERATIONS AND CLOTHING SNAGS.
4. FIELD DAMAGE TO COATINGS OR GALVANIZATION SHALL BE REPAIRED WITH MATERIALS EQUIVALENT TO ORIGINAL COATING.
5. ALL WELDS TO BE 5/16" FILLETS ALL THE WAY AROUND THE CONNECTED ELEMENTS UNLESS NOTED OTHERWISE.
6. AT CONTRACTOR'S OPTION FIELD WELDING OF COMPONENTS IS ACCEPTABLE AS LONG AS THE WELDS AND ANY DAMAGED SURFACES ARE LIBERALLY PAINTED WITH A ZINC RICH PAINT.

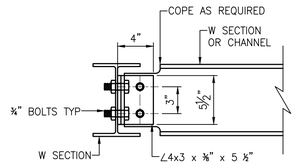

C TYPICAL BEAM CONNECTION DETAIL
NTS

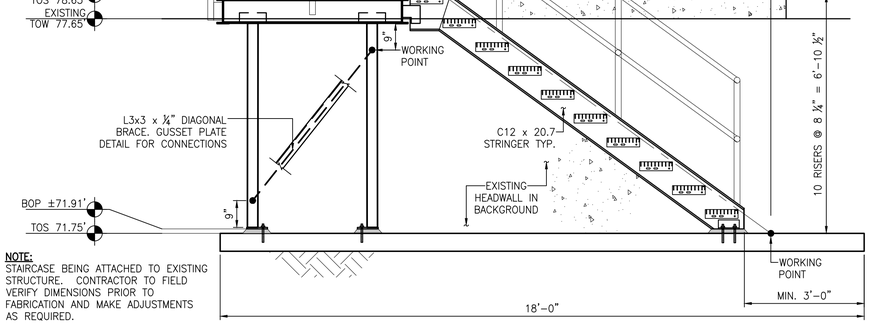

NOTE:
STAIRCASE BEING ATTACHED TO EXISTING STRUCTURE. CONTRACTOR TO FIELD VERIFY DIMENSIONS PRIOR TO FABRICATION AND MAKE ADJUSTMENTS AS REQUIRED.

D STAIRCASE ELEVATION
NTS

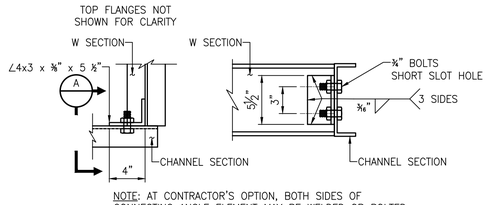

NOTE: AT CONTRACTOR'S OPTION, BOTH SIDES OF CONNECTING ANGLE ELEMENT MAY BE WELDED OR BOLTED.

PLAN VIEW ELEVATION

E CHANNEL TO W SECTION @ BEAM END CONNECTION
NTS

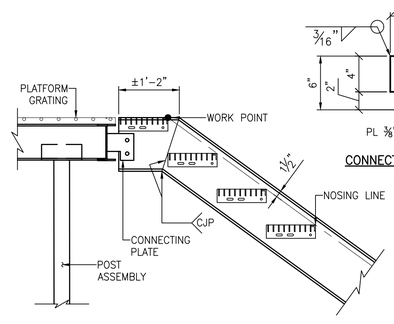

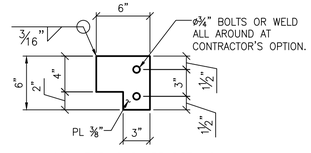

CONNECTING PLATE DETAILS

F STAIR TOP DETAIL
NTS

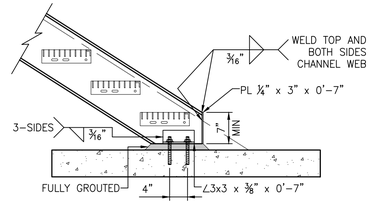

ANCHOR BOLTS TO BE ϕ⅝" HDG HILTI QUICKBOLTS WITH 4" EMBED. TYP.

G STAIR BOTTOM DETAIL
NTS

PROJECT BENCHMARK
CITY OF SUGAR LAND FLOODPLAIN REFERENCE MONUMENT SGR-RM 006: A BRASS DISK STAMPED "RM 006" SET IN CONCRETE AT THE SOUTHWEST CORNER OF A CONCRETE SLAB FOR A SANITARY SEWER LIFT STATION LOCATED AT THE SOUTH SIDE OF LEXINGTON BLVD. THE POINT IS LOCATED +/- 850 WEST OF THE INTERESECTION OF LEXINGTON BLVD AND AUSTIN PARKWAY.
ELEVATION = 67.85 FEET NAVD88 2001 ADJ.
SURF. COORD. N:13778271.570 & E:3041366.199

SITE TBM1
TBM-FBCLID2_MON3: A BRASS DISK STAMPED "FBCLID2 MON3" SET IN CONCRETE AT PUMP STATION "A". THE POINT IS LOCATED +/- 350 FEET SOUTH OF THE INTERSECTION OF GREYSTONE WAY AND APRIL MEADOWS WAY.
ELEVATION = 79.25 FEET NAVD88 2001 ADJ.
SURF. COORD. N:13774180.945 & E:3037455.324

SITE TBM2
TBM-FBCLID2_MON4: A BRASS DISK STAMPED "FBCLID2 MON4" SET IN CONCRETE AT THE SOUTH SIDE OF THE AUSTIN PARKWAY BRIDGE OVER DITCH "D1".
ELEVATION = 66.90 FEET NAVD88 2001 ADJ.
SURF. COORD. N:13778125.686 & E:3043056.435

SITE TBM3
TBM-FBCLID2_MON6: A BRASS DISK STAMPED "FBCLID2 MON6" SET IN CONCRETE AT THE SOUTH SIDE OF THE AUSTIN PARKWAY BRIDGE OVER DITCH "C".
ELEVATION = 68.82 FEET NAVD88 2001 ADJ.
SURF. COORD. N:13774026.396 & E:3047357.625

NOTES:

RECORD DRAWING
I HEREBY CERTIFY THAT THIS DRAWING REFLECTS THE IMPROVEMENTS CONSTRUCTED AS TO SIZE, LOCATION, AND GRADE; AND THAT THE CONSTRUCTION WAS IN SUBSTANTIAL COMPLIANCE WITH THE CONTRACT DOCUMENTS.
CONTRACTOR:_____ DATE:_____
TITLE:_____

DATE	REVISION	BY

FORT BEND COUNTY L.I.D NO. 14

STAIRCASE DETAILS

(SHEET 1 OF 2) **S-7**

LJA Engineering, Inc.
1904 W. Grand Parkway North, Suite 100, Katy, Texas 77449
Phone 713.953.5200 Fax 713.953.5026 FRN-F-1386

LJA PROJECT NO.: 1301-1413

DRAWN: WK DESIGN: MK DATE: DEC 2023

SCALE: AS SHOWN

SHEET NO. S7 OF S11

5/20/24
STATE OF TEXAS
JOEL B. HUBER
134590
LICENSED PROFESSIONAL ENGINEER

PUMP STATION UPGRADE AND REPLACEMENT – JOB NO. 1301-1413

ADDENDUM NO. 1

Date\Time : Mon, 20 May 2024 - 1:14pm User Name : wkramer
Path\Name : I:\Projects\1301\1413\Structural\CAD_Sheet_Files\S7 STAIRCASE DETAILS.dwg

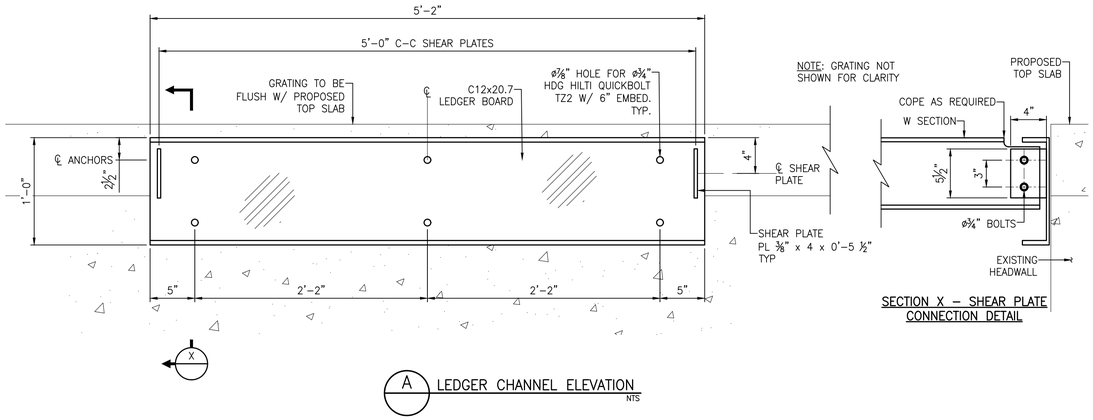

A LEDGER CHANNEL ELEVATION
NTS

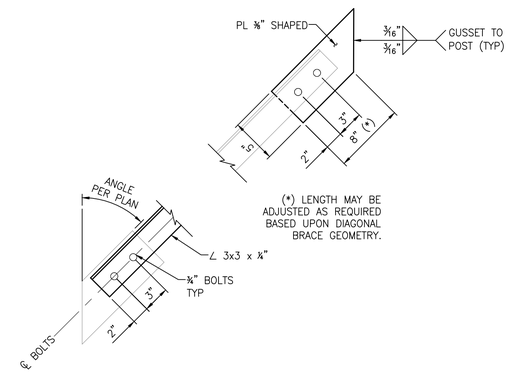

B TYPICAL GUSSET PLATE DETAIL
NTS

PROJECT BENCHMARK

CITY OF SUGAR LAND FLOODPLAIN REFERENCE MONUMENT SGR-RM 006: A BRASS DISK STAMPED "RM 006" SET IN CONCRETE AT THE SOUTHWEST CORNER OF A CONCRETE SLAB FOR A SANITARY SEWER LIFT STATION LOCATED AT THE SOUTH SIDE OF LEXINGTON BLVD. THE POINT IS LOCATED +/- 850 WEST OF THE INTERESECTION OF LEXINGTON BLVD AND AUSTIN PARKWAY.

ELEVATION = 67.85 FEET NAVD88 2001 ADJ.

SURF. COORD. N:13778271.570 & E:3041366.199

SITE TBM1

TBM-FBCLID2_MON3: A BRASS DISK STAMPED "FBCLID2 MON3" SET IN CONCRETE AT PUMP STATION "A". THE POINT IS LOCATED +/- 350 FEET SOUTH OF THE INTERSECTION OF GREYSTONE WAY AND APRIL MEADOWS WAY.

ELEVATION = 79.25 FEET NAVD88 2001 ADJ.

SURF. COORD. N:13774180.945 & E:3037455.324

SITE TBM2

TBM-FBCLID2_MON4: A BRASS DISK STAMPED "FBCLID2 MON4" SET IN CONCRETE AT THE SOUTH SIDE OF THE AUSTIN PARKWAY BRIDGE OVER DITCH "D1".

ELEVATION = 66.90 FEET NAVD88 2001 ADJ.

SURF. COORD. N:13778125.686 & E:3043056.435

SITE TBM3

TBM-FBCLID2_MON6: A BRASS DISK STAMPED "FBCLID2 MON6" SET IN CONCRETE AT THE SOUTH SIDE OF THE AUSTIN PARKWAY BRIDGE OVER DITCH "C".

ELEVATION = 68.82 FEET NAVD88 2001 ADJ.

SURF. COORD. N:13774026.396 & E:3047357.625

NOTES:

RECORD DRAWING

I HEREBY CERTIFY THAT THIS DRAWING REFLECTS THE IMPROVEMENTS CONSTRUCTED AS TO SIZE, LOCATION, AND GRADE; AND THAT THE CONSTRUCTION WAS IN SUBSTANTIAL COMPLIANCE WITH THE CONTRACT DOCUMENTS.

CONTRACTOR:_____ DATE:_____

TITLE:_____

DATE	REVISION	BY

FORT BEND COUNTY L.I.D NO. 14

STAIRCASE DETAILS

(SHEET 2 OF 2) **S-8**

5/20/24

STATE OF TEXAS
JOEL B. HUBER
134590
LICENSED
PROFESSIONAL ENGINEER

LJA Engineering, Inc.
1904 W. Grand Parkway North
Suite 100
Katy, Texas 77449
Phone 713.953.5200
Fax 713.953.5026
FRN-F-1386

LJA PROJECT NO.: 1301-1413

DRAWN: WK DESIGN: MK DATE: DEC 2023

SCALE: AS SHOWN

SHEET NO. S8 OF S11

PUMP STATION UPGRADE AND REPLACEMENT - JOB NO. 1301-1413

ADDENDUM NO. 1

Date\Time : Mon, 20 May 2024 - 11:14pm User Name : wkramer
Path\Name : J:\Projects\1301\1413\Structural\CAD\L_Sheet_Files\S8 STAIRCASE DETAILS.dwg

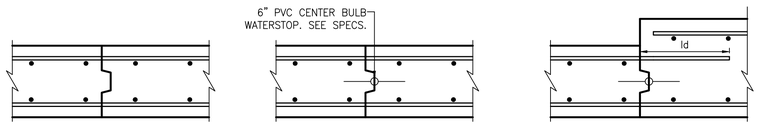

JOINTS OF DIFFERENT THICKNESS

NOTES:
1. SEE CONSTRUCTION JOINT KEY DETAILS FOR APPLICABLE NUMBER OF KEYS AND DIMENSIONS.
2. IN JOINTS WITH MORE THAN ONE KEY, PLACE WATERSTOP IN KEY NEAREST TO SURFACE AGAINST EARTH OR WATER.
3. REINFORCING IS CONTINUOUS THROUGH CONSTRUCTION JOINT

TYPE 'C1' TYPE 'C2' TYPE 'C3'

CONSTRUCTION JOINTS

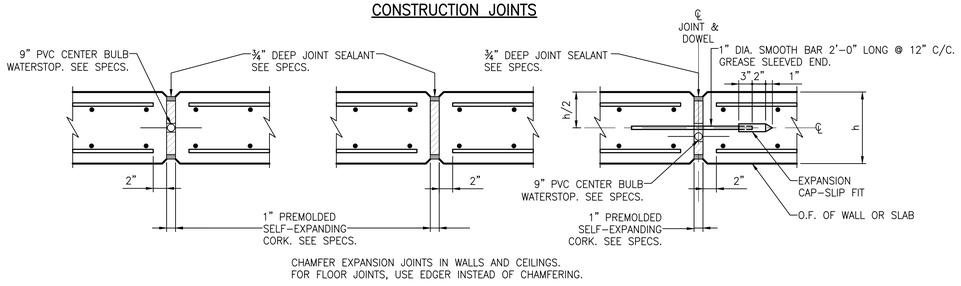

CHAMFER EXPANSION JOINTS IN WALLS AND CEILINGS.
FOR FLOOR JOINTS, USE EDGER INSTEAD OF CHAMFERING.

TYPE 'E1' TYPE 'E2' TYPE 'E3'

EXPANSION JOINTS

B CONSTRUCTION AND EXPANSION JOINTS FOR WALLS & SLABS
NTS

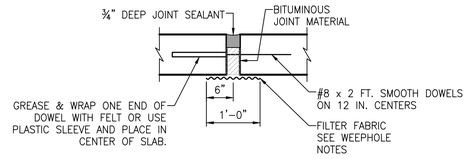

EXPANSION JOINT
SCALE = NTS

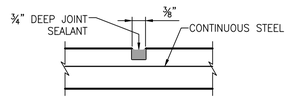

CONTROL JOINT
SCALE = NTS

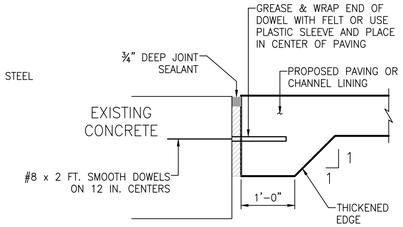

DOWELED CONNECTION TO EXISTING CONCRETE
SCALE = NTS

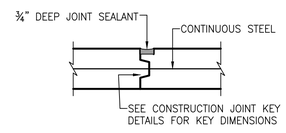

LONGITUDINAL CONSTRUCTION JOINT
SCALE = NTS

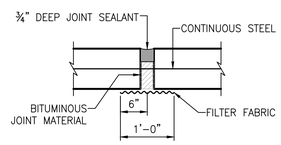

TRANSVERSE CONSTRUCTION JOINT
SCALE = NTS

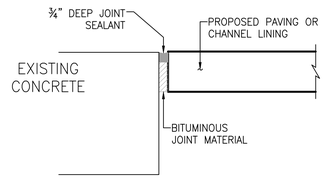

CONCRETE ADJOINING EXISTING CONCRETE – NO CONNECTION
SCALE = NTS

A CONSTRUCTION, EXPANSION & CONTROL JOINTS FOR PAVING, CHANNEL LINING
NTS

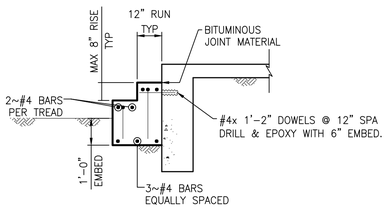

C CONCRETE STEPS
NTS

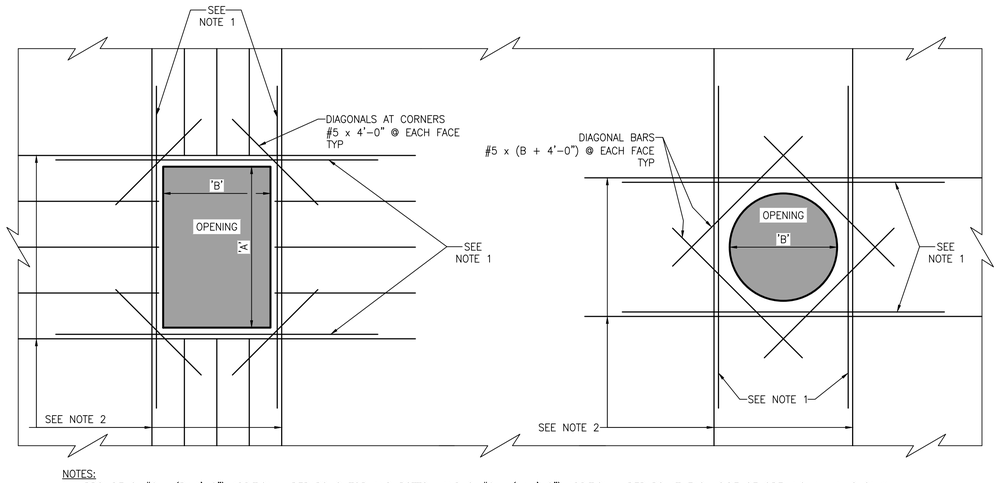

NOTES:
1. PROVIDE 2-#6 x (B+4'-0") ADDITIONAL REBARS @ TOP AND BOTTOM AND 2-#6 x (A+4'-0") ADDITIONAL REBARS AT EACH SIDE OF OPENING IN WALLS ONLY.
2. PROVIDE ADDITIONAL BARS EQUAL TO ONE-HALF OF BARS INTERRUPTED AT EACH SIDE OF OPENING AT 3" C/C. THESE BARS SHALL BE ORIGINAL SIZES AND LENGTHS AS THOSE OF THE INTERRUPTED BARS. (TYPICAL FOR OPENINGS IN SLABS AND PRESSURE WALLS.)

E ADDITIONAL REINFORCING STEEL AT OPENINGS IN WALLS & SLABS
NTS

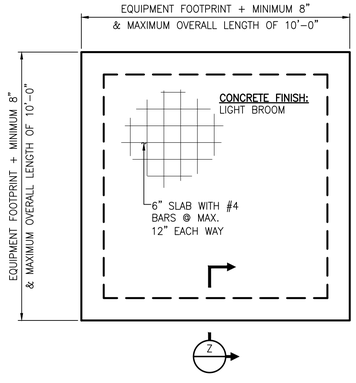

PLAN VIEW

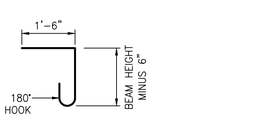

#3 C-BARS

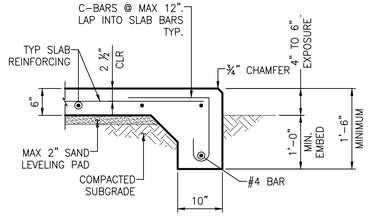

SECTION Z – TYPICAL SLAB EDGE

D MISCELLANEOUS PAD DETAIL
NTS

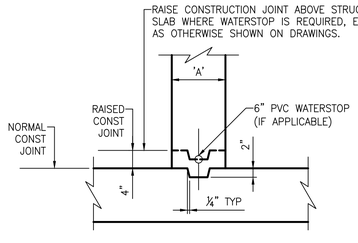

'A'	NOMINAL KEY SIZE
UP TO 8"	1-2"x3" KEY
9" TO 12"	1-2"x4" KEY
13" TO 18"	1-2"x6" KEY
19" TO 24"	2-2"x4" KEY
25" & OVER	2-2"x6" KEY

NOTES:
1. NUMBER AND SIZE OF KEYS SHOWN APPLY TO JOINTS IN SLABS AND TO BOTH VERTICAL AND HORIZONTAL JOINTS IN WALLS EXCEPT AS OTHERWISE NOTED ON THE DRAWINGS.
2. THE RAISED CONSTRUCTION JOINT DETAIL APPLIES TO 'WALL TO SLAB' OR 'WALL TO PERPENDICULAR WALL' JOINTS CONTAINING WATERSTOP EXCEPT AT OTHERWISE SHOWN ON THE PLANS.

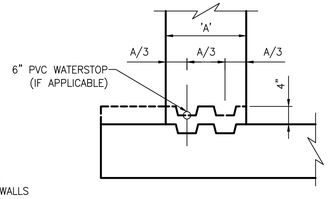

F CONSTRUCTION JOINT KEY DETAILS
NTS

PROJECT BENCHMARK
CITY OF SUGAR LAND FLOODPLAIN REFERENCE MONUMENT SGR-RM 006: A BRASS DISK STAMPED "RM 006" SET IN CONCRETE AT THE SOUTHWEST CORNER OF A CONCRETE SLAB FOR A SANITARY SEWER LIFT STATION LOCATED AT THE SOUTH SIDE OF LEXINGTON BLVD. THE POINT IS LOCATED +/- 850 WEST OF THE INTERESECTION OF LEXINGTON BLVD AND AUSTIN PARKWAY.
ELEVATION = 67.85 FEET NAVD88 2001 ADJ.
SURF. COORD. N:13778271.570 & E:3041366.199

SITE TBM1
TBM-FBCLID2_MON3: A BRASS DISK STAMPED "FBCLID2 MON3" SET IN CONCRETE AT PUMP STATION "A". THE POINT IS LOCATED +/- 350 FEET SOUTH OF THE INTERSECTION OF GREYSTONE WAY AND APRIL MEADOWS WAY.
ELEVATION = 79.25 FEET NAVD88 2001 ADJ.
SURF. COORD. N:13774180.945 & E:3037455.324

SITE TBM2
TBM-FBCLID2_MON4: A BRASS DISK STAMPED "FBCLID2 MON4" SET IN CONCRETE AT THE SOUTH SIDE OF THE AUSTIN PARKWAY BRIDGE OVER DITCH "D1".
ELEVATION = 66.90 FEET NAVD88 2001 ADJ.
SURF. COORD. N:13778125.686 & E:3043056.435

SITE TBM3
TBM-FBCLID2_MON6: A BRASS DISK STAMPED "FBCLID2 MON6" SET IN CONCRETE AT THE SOUTH SIDE OF THE AUSTIN PARKWAY BRIDGE OVER DITCH "C".
ELEVATION = 68.82 FEET NAVD88 2001 ADJ.
SURF. COORD. N:13774026.396 & E:3047357.625

NOTES:

RECORD DRAWING
I HEREBY CERTIFY THAT THIS DRAWING REFLECTS THE IMPROVEMENTS CONSTRUCTED AS TO SIZE, LOCATION, AND GRADE; AND THAT THE CONSTRUCTION WAS IN SUBSTANTIAL COMPLIANCE WITH THE CONTRACT DOCUMENTS.
CONTRACTOR:_____ DATE:_____
TITLE:_____

DATE	REVISION	BY

FORT BEND COUNTY L.I.D NO. 14

MISCELLANEOUS CONCRETE DETAILS 1

S-9

LJA Engineering, Inc.
1904 W. Grand Parkway North
Suite 100
Katy, Texas 77449
Phone 713.953.5200
Fax 713.953.5026
FRN-F-1386

LJA PROJECT NO.: 1301-1413

DRAWN: WK DESIGN: MK DATE: DEC 2023

SCALE: AS SHOWN

SHEET NO. S9 OF S11

ADDENDUM NO. 1

5/20/24
STATE OF TEXAS
NIKOLAS A. KALOS
124916
LICENSED
PROFESSIONAL ENGINEER

PUMP STATION UPGRADE AND REPLACEMENT – JOB NO. 1301-1413

Date\Time : Mon, 20 May 2024 - 1:14pm User Name : ekromer
Path\Name : I:\Projects\1301-1413\Structural\ACAD_Sheet_Files\S9 MISCELLANEOUS CONCRETE DETAILS 1.dwg

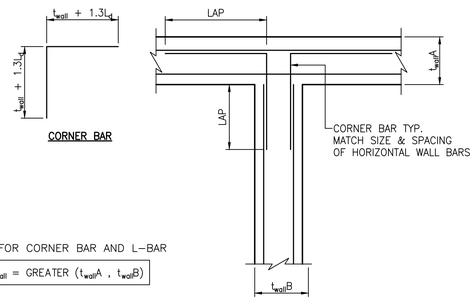

CORNER BAR

NOTE: FOR CORNER BAR AND L-BAR

t_{wall} = GREATER ($t_{wall}A$, $t_{wall}B$)

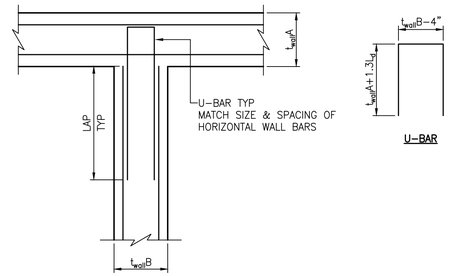

OPTIONAL

(FOR t_{wall} ≥16" AND MAX #6 BAR SIZE)

U-BAR

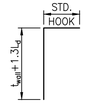

L-BAR

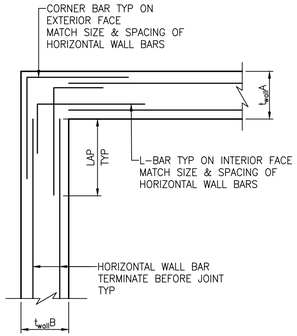

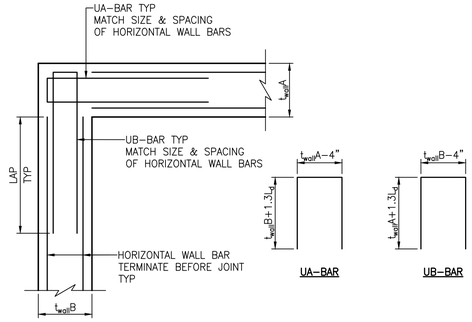

UA-BAR

UB-BAR

OPTIONAL

(FOR t_{wall} ≥16" AND MAX #6 BAR SIZE)

B WALL CORNER BAR DETAILS – PLAN VIEW NTS

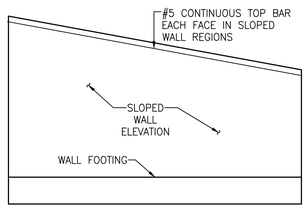

C CONTINUOUS TOP BAR DETAIL NTS

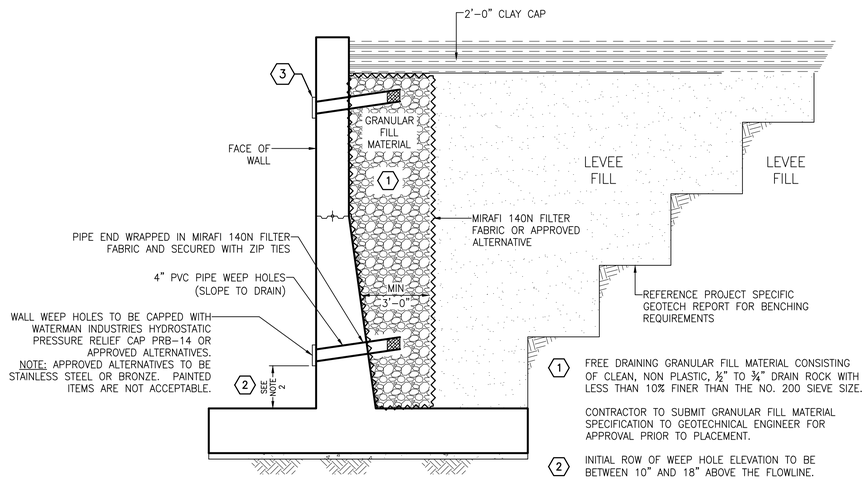

1 FREE DRAINING GRANULAR FILL MATERIAL CONSISTING OF CLEAN, NON PLASTIC, ½" TO ¾" DRAIN ROCK WITH LESS THAN 10% FINER THAN THE NO. 200 SIEVE SIZE.

CONTRACTOR TO SUBMIT GRANULAR FILL MATERIAL SPECIFICATION TO GEOTECHNICAL ENGINEER FOR APPROVAL PRIOR TO PLACEMENT.

2 INITIAL ROW OF WEEP HOLE ELEVATION TO BE BETWEEN 10" AND 18" ABOVE THE FLOWLINE.

3 A SECOND ROW OF WEEP HOLES IS REQUIRED ON THE EAST & WEST WALLS OF THE PUMP STATION'S FOREBAY AS SHOWN ON SHEET S-3. LOCATE THESE WEEP HOLES BETWEEN THE COUNTERFORTS AT ELEVATION SHOWN ON THE PLANS.

A WALL BACKFILL & WEEP HOLE DETAIL NTS

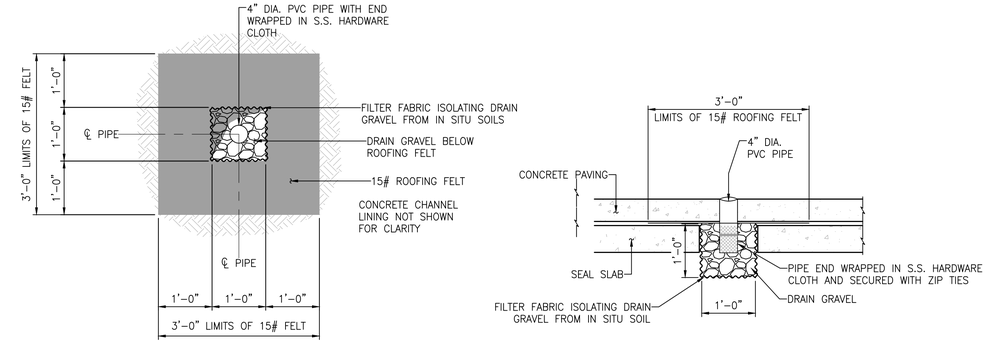

D TYPE 'A' WEEP HOLE – PLAN & SECTION NTS

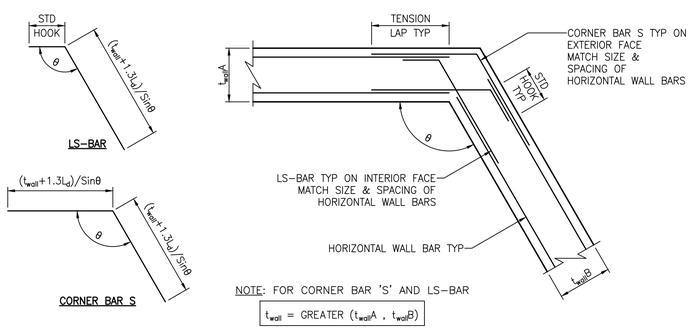

NOTE: FOR CORNER BAR 'S' AND LS-BAR

t_{wall} = GREATER ($t_{wall}A$, $t_{wall}B$)

E >90° SKEWED CORNER BARS DETAILS – PLAN VIEW NTS

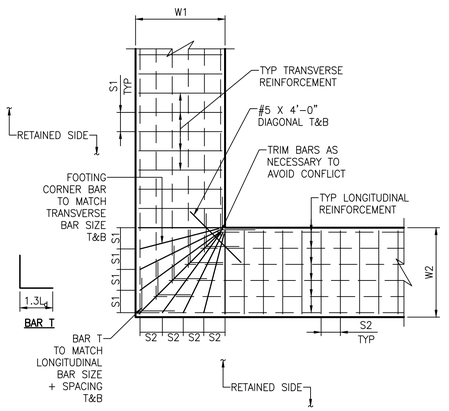

F FOOTING CORNER BAR DETAIL – 90° SKEW NTS

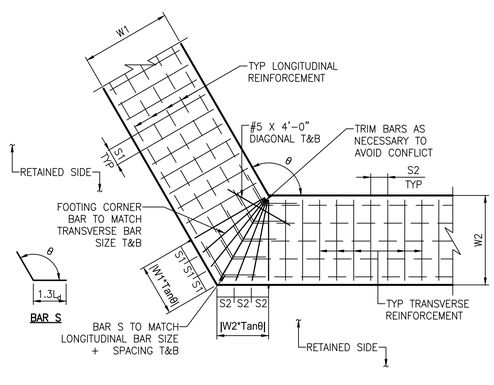

G FOOTING CORNER BAR DETAIL – > 90° SKEW NTS

PROJECT BENCHMARK

CITY OF SUGAR LAND FLOODPLAIN REFERENCE MONUMENT SGR-RM 006: A BRASS DISK STAMPED "RM 006" SET IN CONCRETE AT THE SOUTHWEST CORNER OF A CONCRETE SLAB FOR A SANITARY SEWER LIFT STATION LOCATED AT THE SOUTH SIDE OF LEXINGTON BLVD. THE POINT IS LOCATED +/- 850 WEST OF THE INTERESECTION OF LEXINGTON BLVD AND AUSTIN PARKWAY.

ELEVATION = 67.85 FEET NAVD88 2001 ADJ.

SURF. COORD. N:13778271.570 & E:3041366.199

SITE TBM1

TBM-FBCLID2_MON3: A BRASS DISK STAMPED "FBCLID2 MON3" SET IN CONCRETE AT PUMP STATION "A". THE POINT IS LOCATED +/- 350 FEET SOUTH OF THE INTERSECTION OF GREYSTONE WAY AND APRIL MEADOWS WAY.

ELEVATION = 79.25 FEET NAVD88 2001 ADJ.

SURF. COORD. N:13774180.945 & E:3037455.324

SITE TBM2

TBM-FBCLID2_MON4: A BRASS DISK STAMPED "FBCLID2 MON4" SET IN CONCRETE AT THE SOUTH SIDE OF THE AUSTIN PARKWAY BRIDGE OVER DITCH "D1".

ELEVATION = 66.90 FEET NAVD88 2001 ADJ.

SURF. COORD. N:13778125.686 & E:3043056.435

SITE TBM3

TBM-FBCLID2_MON6: A BRASS DISK STAMPED "FBCLID2 MON6" SET IN CONCRETE AT THE SOUTH SIDE OF THE AUSTIN PARKWAY BRIDGE OVER DITCH "C".

ELEVATION = 68.82 FEET NAVD88 2001 ADJ.

SURF. COORD. N:13774026.396 & E:3047357.625

NOTES:

RECORD DRAWING

I HEREBY CERTIFY THAT THIS DRAWING REFLECTS THE IMPROVEMENTS CONSTRUCTED AS TO SIZE, LOCATION, AND GRADE; AND THAT THE CONSTRUCTION WAS IN SUBSTANTIAL COMPLIANCE WITH THE CONTRACT DOCUMENTS.

CONTRACTOR: _____ DATE: _____

TITLE: _____

DATE	REVISION	BY

FORT BEND COUNTY L.I.D NO. 14

MISCELLANEOUS CONCRETE DETAILS 2

S-10

LJA Engineering, Inc.
1904 W. Grand Parkway North
Suite 100
Katy, Texas 77449
Phone 713.953.5200
Fax 713.953.5026
FRN-F-1386

LJA PROJECT NO.: 1301-1413

DRAWN: WK DESIGN: MK DATE: DEC 2023

SCALE: AS SHOWN

SHEET NO. S10 OF S11

5/20/24

STATE OF TEXAS
NIKOLAS A. KALOS
124916
LICENSED
PROFESSIONAL ENGINEER

ADDENDUM NO. 1

PUMP STATION UPGRADE AND REPLACEMENT – JOB NO. 1301-1413

Date\Time : Mon, 20 May 2024 – 1:14pm User Name : wkramer
Path\Name : I:\Projects\1301\1413\Structural\CAD\S_Sheet_Files\S10 MISCELLANEOUS CONCRETE DETAILS 2.dwg

EMBEDDED ANGLE TABLE	
GRATING DEPTH	SHELF ANGLE SIZE
1 1/2"	L2 1/2" x 1 1/2" x 1/4"
2"	L2 1/2" x 2" x 1/4"
2 1/2"	L2 1/2" x 2 1/2" x 1/4"

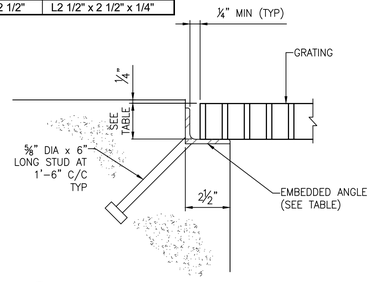

D TYPICAL EMBEDDED ANGLE DETAIL FOR GRATING NTS

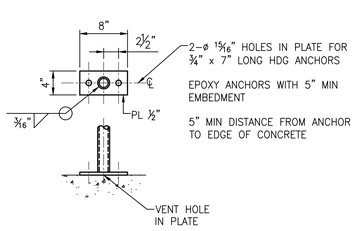

C POST CONNECTION TO CONCRETE 1 NTS

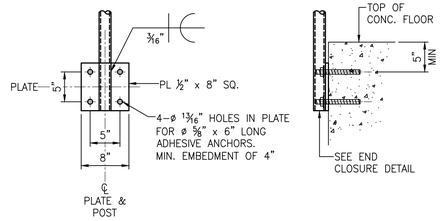

B POST CONNECTION TO CONCRETE 2 NTS

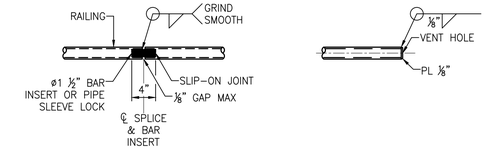

FIELD SPLICE DETAIL

END CLOSURE DETAIL

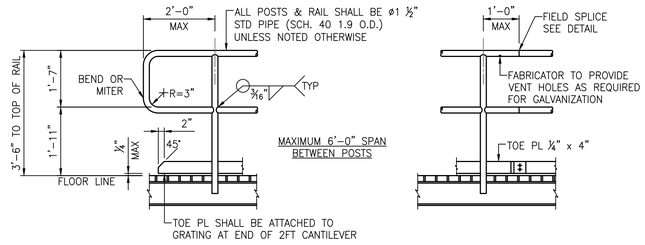

A ELEVATION – TYPICAL GUARDRAIL NTS

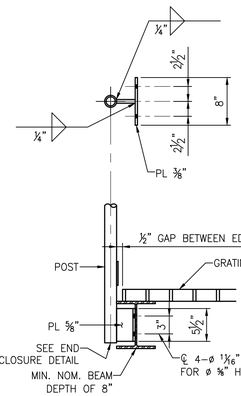

E POST CONNECTION TO STEEL 1 NTS

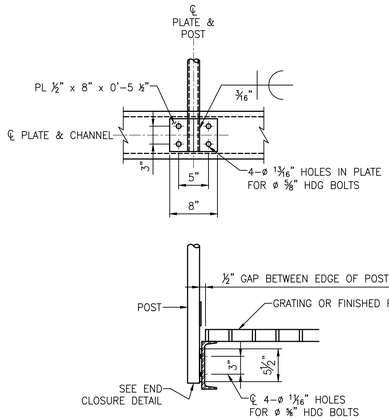

F POST CONNECTION TO STEEL 2 NTS

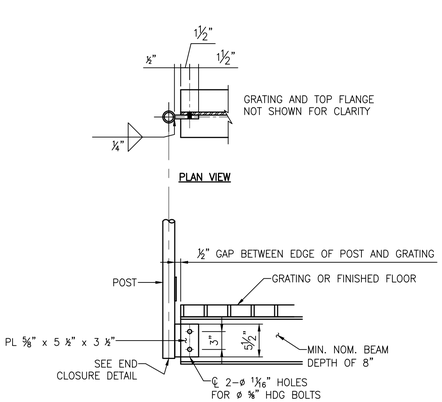

G POST CONNECTION TO STEEL 3 NTS

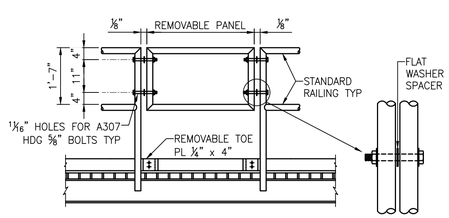

H ELEVATION – REMOVABLE RAIL SECTION NTS

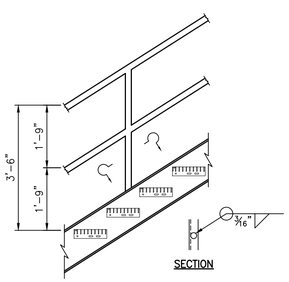

I POST CONNECTION TO STAIR STRINGER NTS

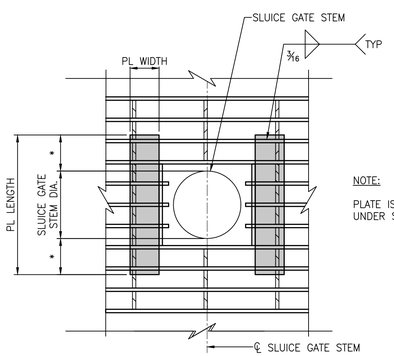

J GRATING PLATE AT SLUICE GATE STEMS DETAIL NTS

PLATE DIMENSIONS:
PL THICKNESS = ¼"
PL WIDTH = 2"
PL LENGTH = SLUICE GATE STEM DIA +1'-0"

* EXTEND PLATE SUCH THAT IT IS WELDED TO AT LEAST TWO GRATING BARS PAST THE BAR WHICH IS CUT (6" MIN)

RAILING GENERAL NOTES

1. RAILING SHALL BE ROUND STRUCTURAL TUBING OF STANDARD PIPE (SCH 40) CONFORMING TO ASTM A500 GRADE B OR ASTM A53 GRADE B WITH AN OUTSIDE DIAMETER OF 1.9 INCHES (1.5 INCHES NOMINAL DIAMETER)
2. ALL STRUCTURAL SHAPES AND PLATES SHALL BE A36 STEEL UNLESS OTHERWISE NOTED
3. ALL BOLTS FOR RAILING CONNECTIONS SHALL BE ⅝" DIAMETER A307 HOT DIPPED GALVANIZED UNLESS NOTED OTHERWISE.
4. RAILING SHALL BE WELDED CONSTRUCTION EXCEPT AS SHOWN IN DESIGN DRAWINGS AND/OR THE ATTACHED DETAILS. ALL JOINTS AND WELDS IN TOP RAIL SHALL BE SMOOTH FINISHED. RAILING SYSTEMS SHALL BE SURFACED IN A MANNER TO PREVENT INJURY FROM PUNCTURES OR LACERATIONS AND CLOTHING SNAGS.
5. RAILINGS SHALL BE HOT DIPPED GALVANIZED AFTER FABRICATION. FIELD DAMAGE TO COATING SHALL BE REPAIRED WITH MATERIALS EQUIVALENT TO ORIGINAL COATING.

PROJECT BENCHMARK

CITY OF SUGAR LAND FLOODPLAIN REFERENCE MONUMENT SGR-RM 006: A BRASS DISK STAMPED "RM 006" SET IN CONCRETE AT THE SOUTHWEST CORNER OF A CONCRETE SLAB FOR A SANITARY SEWER LIFT STATION LOCATED AT THE SOUTH SIDE OF LEXINGTON BLVD. THE POINT IS LOCATED +/- 850 WEST OF THE INTERESECTION OF LEXINGTON BLVD AND AUSTIN PARKWAY.

ELEVATION = 67.85 FEET NAVD88 2001 ADJ.

SURF. COORD. N:13778271.570 & E:3041366.199

SITE TBM1

TBM-FBCLID2_MON3: A BRASS DISK STAMPED "FBCLID2 MON3" SET IN CONCRETE AT PUMP STATION "A". THE POINT IS LOCATED +/- 350 FEET SOUTH OF THE INTERSECTION OF GREYSTONE WAY AND APRIL MEADOWS WAY.

ELEVATION = 79.25 FEET NAVD88 2001 ADJ.

SURF. COORD. N:13774180.945 & E:3037455.324

SITE TBM2

TBM-FBCLID2_MON4: A BRASS DISK STAMPED "FBCLID2 MON4" SET IN CONCRETE AT THE SOUTH SIDE OF THE AUSTIN PARKWAY BRIDGE OVER DITCH "D1".

ELEVATION = 66.90 FEET NAVD88 2001 ADJ.

SURF. COORD. N:13778125.686 & E:3043056.435

SITE TBM3

TBM-FBCLID2_MON6: A BRASS DISK STAMPED "FBCLID2 MON6" SET IN CONCRETE AT THE SOUTH SIDE OF THE AUSTIN PARKWAY BRIDGE OVER DITCH "C".

ELEVATION = 68.82 FEET NAVD88 2001 ADJ.

SURF. COORD. N:13774026.396 & E:3047357.625

NOTES:

RECORD DRAWING

I HEREBY CERTIFY THAT THIS DRAWING REFLECTS THE IMPROVEMENTS CONSTRUCTED AS TO SIZE, LOCATION, AND GRADE; AND THAT THE CONSTRUCTION WAS IN SUBSTANTIAL COMPLIANCE WITH THE CONTRACT DOCUMENTS.

CONTRACTOR:_____ DATE:_____

TITLE:_____

DATE	REVISION	BY

FORT BEND COUNTY L.I.D NO. 14

RAILING DETAILS & MISCELLANEOUS METALS

S-11

5/20/24

STATE OF TEXAS
NIKOLAS A. KALOS
124916
LICENSED PROFESSIONAL ENGINEER

LJA Engineering, Inc.
1904 W. Grand Parkway North
Suite 100
Katy, Texas 77449
Phone 713.953.5200
Fax 713.953.5026
FRN-F-1386

LJA PROJECT NO.: 1301-1413

DRAWN: WK DESIGN: MK DATE: DEC 2023

SCALE: AS SHOWN

SHEET NO. S11 OF S11

ADDENDUM NO. 1

PUMP STATION UPGRADE AND REPLACEMENT – JOB NO. 1301-1413

Date\Time = Mon, 20 May, 2024 - 1:15pm User Name = wkramer
Path\Name = I:\Projects\1301\1413\Structural\CAD_Sheet_Files\S11 RAILING DETAILS & MISCELLANEOUS METALS.dwg

ELECTRICAL SYMBOL LEGEND

SYMBOL	DESCRIPTION
HA-1,3,5	HOME RUN TO PANEL HA, CIRCUITS 1, 3, 5 USING 3#12 (H), 3#12 (N), 1#12 (G), 3/4" C (UNLESS OTHERWISE NOTED) EACH CIRCUIT WILL HAVE ITS OWN NEUTRAL
XX	ROUND INCANDESCENT, HID, OR COMPACT FLUORESCENT LUMINAIRE RECESSED OR SUSPENDED FROM ABOVE XX = TYPE ON LUMINAIRE SCHEDULE
XX	ROUND INCANDESCENT, HID, OR COMPACT FLUORESCENT LUMINAIRE SUSPENDED FROM SIDE ARM XX = TYPE ON LUMINAIRE SCHEDULE
XX	LINEAR FLUORESCENT LUMINAIRE RECESSED OR SUSPENDED FROM ABOVE XX = TYPE ON LUMINAIRE SCHEDULE
XX	LINEAR FLUORESCENT WITH EMERGENCY EGRESS OPERATION RECESSED OR SUSPENDED FROM ABOVE XX = TYPE ON LUMINAIRE SCHEDULE
X1 X2	EXIT SIGN WITH DIRECTIONAL ARROWS AS INDICATED, 1 OR 2 FACE PENDANT MOUNTED FROM ABOVE X1 OR X2 = TYPE ON LUMINAIRE SCHEDULE
XX	EMERGENCY EGRESS ONLY LUMINAIRE SURFACE MOUNTED FROM BACK XX = TYPE ON LUMINAIRE SCHEDULE
	NEMA 5-20R DUPLEX RECEPTACLE, MOUNTED 18" AFF (UON) WP = WEATHER PROOF, GFI = GFCI PROTECTED, IG = ISOLATED GROUND PROVIDE WITH STAINLESS STEEL COVERPLATE AND CIRCUIT NUMBER
	NEMA 5-20R QUADRAPLEX RECEPTACLE, MOUNTED 18" AFF (UON) WP = WEATHER PROOF, GFI = GFCI PROTECTED, IG = ISOLATED GROUND PROVIDE WITH STAINLESS STEEL COVERPLATE AND CIRCUIT NUMBER
L6-30R	SIMPLEX RECEPTACLE, MOUNTED 18" AFF (UON) WITH INDICATED CONFIGURATION (E.G. L6-30R = NEMA TWISTLOCK, 250 VAC, 30 A) PROVIDE WITH STAINLESS STEEL COVERPLATE AND CIRCUIT NUMBER
	FLUSH FLOOR BOX WITH WIRING DEVICES AS INDICATED ON PLANS
J	JUNCTION BOX
$XX	LIGHT SWITCH RATED 120/277 VAC, MOUNTED 42" AFF (UON), SINGLE-POLE (UON) 2 = 2-POLE, 3 = 3-WAY, 4 = 4-WAY, D = DIMMER, M = MOTOR-RATED W/ OL, WP = WEATHER PROOF, OS = INTEGRAL OCCUPANCY SENSOR, R = RED COLOR, K = KEYED (MODIFIERS MAY BE COMBINED, E.G. D3 = 3-WAY DIMMER)
OS OS	CEILING OR WALL MOUNTED OCCUPANCY SENSOR LIGHTING CONTROL WITH PASSIVE INFRARED AND ULTRASOUND DUAL TECHNOLOGY, 20 A RATED
TV	TV OUTLET 1-GANG BACKBOX, 4+2" AFF (UON), SS-302 COVER 1" C WITH MEASURED PULL STRING ROUTED IN CONDUITS BACK TO SERVER ROOM DEVICES AND LOW-VOLTAGE CABLING BY TELECOM CONTRACTOR
W	WALL TELEPHONE OUTLET 1-GANG BACKBOX, 4+2" AFF (UON), SS-302 COVER 1" C WITH MEASURED PULL STRING ROUTED IN CONDUITS BACK TO SERVER ROOM DEVICES AND LOW-VOLTAGE CABLING BY TELECOM CONTRACTOR
XX	COMBINATION DATA/VOICE (CAT 6E CABLE) OUTLET 2-GANG BACKBOX, SS-302 COVER 1" C WITH MEASURED PULL STRING ROUTED IN CONDUITS BACK TO SERVER ROOM. DEVICES AND LOW-VOLTAGE CABLING BY TELECOM CONTRACTOR. XX - DENOTES NUMBER OF CAT6E CABLES
	MULTIOUTLET ASSEMBLY (PLUG MOLD) AS SPECIFIED ON PLANS, WITH DEVICE TYPES AND QUANTITIES INDICATED ON PLANS
EPO	EMERGENCY POWER OFF, MUSHROOM HEAD, MAINTAINED CONTACT PUSH BUTTON
PC	PHOTOELECTRIC SENSOR AIMED NORTH
TC	TIME CLOCK, ASTRONOMIC/MULTI-POLE CONTACTOR
M	POWER COMPANY POWER METER
HA	LIGHTING CLASS PANEL HA = PANEL NAME CHARACTERISTICS AS INDICATED ON ONE LINE DIAGRAM AND PANEL SCHEDULE
DA	DISTRIBUTION CLASS PANEL DA = PANEL NAME CHARACTERISTICS AS INDICATED ON ONE LINE DIAGRAM
	CONDUIT TURNING UP CONDUIT TURNING DOWN
OH	WEATHER HEAD FOR CONNECTING OVER HEAD CONDUCTORS
	20" Cu CHATWORTH GROUNDING BUSBAR 4015J-020 TMGB PATTERN, 4" W x 1/4" H, 20"L, INSULATED STANDOFFS, PRE-DRILLED & TAP AS REQUIRED FOR CONDUCTORS
VFD	VARIABLE FREQUENCY DRIVE WITH INTEGRAL DISCONNECTING MEANS, VFCI

ABBREVIATION	DEFINITIONS
2SIW	TWO-SPEED, ONE-WINDING MOTOR
2S2W	TWO-SPEED, TWO-WINDING MOTOR
(A)	ABANDONED TO REMOVE
A	PHASE "A" IN THREE-PHASE SYSTEM
A	AMPERES
AF	AMPERE FUSE OR FRAME RATING
AFCI	ARC FAULT CIRCUIT INTERRUPTER
AFF	ABOVE FINISHED FLOOR
AT	AMPERE TRIP SETTING
AFG	ABOVE FINISHED GRADE
B	PHASE "B" IN THREE-PHASE SYSTEM
BF	BALLAST FACTOR
BFC	BELOW FINISHED CEILING
BFF	BELOW FINISHED FLOOR
BFG	BELOW FINISHED GRADE
C	PHASE "C" IN THREE-PHASE SYSTEM
C	CONDUIT
CB	CIRCUIT BREAKER
CH	CONSTANT HORSE POWER (2SIW MOTOR)
CKT	CIRCUIT
CS	COMBINATION STARTER (MOTOR STARTER / DISCONNECT)
CT	CONSTANT TORQUE (2SIW MOTOR)
CT	CURRENT TRANSFORMER
(D)	EXISTING TO BE DEMOLISHED OR REMOVED
DETD	DUAL ELEMENT, TIME DELAY
DS	DISCONNECT SWITCH
(E)	EXISTING TO REMAIN
EMT	ELECTRICAL METALLIC TUBING
EPM	ELECTRONIC POWER METER
FAAP	FIRE ALARM ANNUNCIATOR PANEL
FACP	FIRE ALARM CONTROL PANEL
FVNR	FULL VOLTAGE NON-REVERSING
G	GROUND
GEC	GROUNDING ELECTRODE CONDUCTOR
GFI	GROUND FAULT CIRCUIT INTERRUPTER
HMT	HARMONIC-MITIGATING TRANSFORMER
HOA	HAND / OFF / AUTO SWITCH (FOR FVNR CONTACTOR)
HLOA	HIGH / LOW / OFF / AUTO (FOR 2SIW OR 2S2W CONTACTOR)
IG	ISOLATED GROUND
J/R	JAMMING RATIO
kAIC	KILO AMPERE INTERRUPTING CAPACITY
KCMIL	KILO CIRCULAR MILS
kVA	KILO VOLT AMPERES COMPLEX OR APPARENT POWER
kVAR	KILO VOLT AMPERES REACTIVE POWER
kW	KILO WATT REAL POWER
L1	HOT LEG 1 IN SINGLE-PHASE SYSTEM < 250 VAC
L2	HOT LEG 2 IN SINGLE-PHASE SYSTEM < 250 VAC
LSI+G	LONG TERM, SHORT TERM, INSTANTANEOUS, AND GROUND-FAULT
MCB	MAIN CIRCUIT BREAKER
MCC	MOTOR CONTROL CENTER
MLO	MAIN LUGS ONLY
(N)	NEW
N	NEUTRAL
NEC	NATIONAL ELECTRICAL CODE (NFPA 70)
NEMA	NATIONAL ELECTRICAL MANUFACTURERS ASSOCIATION
NF	NON-FUSIBLE
NFPA	NATIONAL FIRE PROTECTION ASSOCIATION
NSL	NON-SWITCHED HOT LEG
OFCI	OWNER FURNISHED, CONTRACTOR INSTALLED
OS	OCCUPANCY SENSOR
P	POLES
PF	POWER FACTOR
PFCC	POWER FACTOR CORRECTION CAPACITOR
PVC	POLY VINYL CHLORIDE
PT	POTENTIAL TRANSFORMER
RAL	RIGID ALUMINUM
RGS	RIGID GALVANIZED STEEL
SEC	SECTION OF LIGHTING-CLASS PANEL
SPD	SURGE PROTECTION DEVICE
SS-xxx	STAINLESS STEEL, "xxx" = AUSTENITIC ALLOY TYPE (E.G. 304)
ST	SHUNT-TRIP FOR CIRCUIT BREAKER
THD	TOTAL HARMONIC DISTORTION
TVSS	TRANSIENT VOLTAGE SURGE SUPPRESSION
TYP	TYPICAL
UON	UNLESS OTHERWISE NOTED
V	VOLTS
VAC	VOLTS, ALTERNATING CURRENT
VDC	VOLTS, DIRECT CURRENT
VFCI	VENDOR FURNISHED, CONTRACTOR INSTALLED
VFD	VARIABLE FREQUENCY DRIVE
VT	VARIABLE TORQUE (2SIW MOTOR)
W	WIRES, NOT INCLUDING GEC
WP	WEATHER PROOF
#	AMERICAN WIRE GAGE
Ø	PHASE
µF	MICRO FARAD
W	OHMS

GENERAL NOTES:

1. SYMBOL LEGEND MAY CONTAIN SYMBOLS THAT ARE NOT USED ON ALL DRAWINGS.
2. ABBREVIATION DEFINITIONS ARE NOT COMPREHENSIVE, AND NOT ALL ABBREVIATIONS MAY APPLY TO ALL DRAWINGS. SUBMIT FORMAL REQUEST FOR INFORMATION WHEN ENCOUNTERING CONFLICTS OR AMBIGUOUS SYMBOLS OR ABBREVIATIONS, AS THESE WILL NOT CONSTITUTE DISMISSAL OF CONTRACTOR RESPONSIBILITY.
3. ALL COVER PLATES FOR RECEPTACLES, SWITCHES, AND DATA SHALL BE SS-302 (UON).
4. PROVIDE DECORA STYLE SWITCHES FOR LIGHT SWITCHES THAT ARE NOT OCCUPANCY SENSOR TYPE.

ELECTRICAL GENERAL NOTES AND SPECIFICATIONS

BOOK SPECIFICATIONS SUPERCEDE ANY NOTES BELOW

1. SCOPE: THIS DIVISION SHALL INCLUDE ALL EQUIPMENT, MATERIALS, AND LABOR REQUIRED FOR COMPLETE INSTALLATION OF THE ELECTRICAL SYSTEM. PROJECT INCLUDES INSTALLATION OF NEW ELECTRICAL DISTRIBUTION SYSTEM, HVAC SYSTEM CONNECTIONS, NEW LIGHTING SYSTEM, NEW RECEPTACLES AND OUTLETS, FIRE ALARM AND NOTIFICATION SYSTEM, AND OTHER ELECTRICAL WORK AS INDICATED ON THE PLANS. CONTRACTOR SHALL PROVIDE CONDUITS, CONDUCTORS FOR POWER, CONTROLS, AND LIGHTING, LIGHTING CONTACTOR AND CONTACT CLOSURES, AND ALL REQUIRED APPARATUS REQUIRED FOR FULL OPERATION OF THE ELECTRICAL SYSTEM.
2. SITE VISIT AND FAMILIARIZATION: CONTRACTORS PROPOSING TO UNDERTAKE WORK UNDER THIS DIVISION SHALL VISIT THE SITE OF THE WORK, AND FULLY INFORM THEMSELVES OF ALL CONDITIONS THAT AFFECT THE WORK, OR COST THEREOF. CONTRACTOR SHALL EXAMINE THE DRAWINGS AND SPECIFICATIONS AS RELATED TO THE SITE CONDITIONS. ANY DISCREPANCY SHALL BE REPORTED TO THE ENGINEER.
3. NOTICE: CONSIDERATION WILL NOT BE GRANTED FOR ANY ALLEGED MISUNDERSTANDING OF THE AMOUNT OF WORK TO BE PERFORMED. TENDER OF A PROPOSAL SHALL CONVEY FULL AGREEMENT TO ALL ITEMS AND CONDITIONS SPECIFIED, INDICATED ON THE DRAWINGS, AND/OR REQUIRED BY NATURE OF THE SITE.
4. DISCREPANCIES: SHOULD CONTRACTOR FIND DISCREPANCIES OR OMISSIONS IN THE CONTRACT DOCUMENTS, OR BE IN DOUBT AS TO THE INTENT THEREOF, HE SHALL IMMEDIATELY OBTAIN CLARIFICATION FROM THE ARCHITECT BEFORE SUBMITTING PROPOSAL FOR WORK IN THIS DIVISION.
5. DEMOLITION: ALL ELECTRICAL COMPONENTS OF THE EXISTING SYSTEM WHICH ARE NOT UTILIZED FOR NEW CONFIGURATION SHALL BE REMOVED AND DISPOSED OF BY CONTRACTOR. REFER TO DEMOLITION NOTES AND DRAWINGS FOR EXTENT OF WORK.
6. TIMELY PLACING OF MATERIALS AND EQUIPMENT: ALL ELECTRICAL APPARATUS SHALL BE INSTALLED AT THE PROPER TIME DURING PROGRESS OF CONSTRUCTION. COORDINATE WORK OPERATIONS WITH OTHER CRAFTS.
7. SPACE REQUIREMENTS: CONTRACTOR FOR WORK UNDER THIS DIVISION SHALL BE FULLY RESPONSIBLE FOR DETERMINING IN ADVANCE OF PURCHASE THAT EQUIPMENT AND MATERIALS PROPOSED FOR INSTALLATION SHALL FIT INTO THE CONFINES INDICATED.
8. MANUFACTURERS' LITERATURE: DELIVER ALL PRINTED TAGS, INSTRUCTIONS, CERTIFIED DRAWINGS, PARTS LISTED, CERTIFICATES, ETC., SUPPLIED WITH EQUIPMENT ITEMS, TO THE OWNER.
9. CODES, PERMITS, AND FEES: WORK UNDER THIS DIVISION SHALL BE CONSTRUCTED IN STRICT CONFORMANCE WITH PERTINENT PROVISIONS OF CITY AND STATE BUILDING CODES.
   A. ALL WORK SHALL COMPLY WITH THE 2020 EDITION OF NATIONAL ELECTRIC CODE (NEC) AND 2015 EDITION OF INTERNATIONAL ENERGY CODE (IECC).
   B. OBTAIN ALL REQUIRED PERMITS. PAY ALL LEGAL FEES FOR PERMITS AND INSPECTIONS BY AUTHORITIES HAVING JURISDICTION.
   C. ALL WORK SHALL COMPLY WITH REQUIREMENTS OF CITY OF HOUSTON.
10. CUTTING AND PATCHING:
    A. CONTRACTOR FOR THIS DIVISION SHALL LAYOUT TO DIMENSION AND LOCATIONS, CUT AND PATCH ALL OPENINGS ON SURFACES TO BE FORMED, FRAMED, OR CUT.
    B. SHOULD CONTRACTOR FOR THIS DIVISION FAIL TO ADHERE WITH THIS REQUIREMENT, AS WORK PROGRESSES, ANY OPENINGS SHALL BE CUT AND PATCHED BY GENERAL CONTRACTOR AT THE EXPENSE OF THIS CONTRACTOR FOR THIS DIVISION.
11. PROTECTION OF APPARATUS: TAKE ALL PRECAUTIONS NECESSARY FOR PROPER PROTECTION OF NEW EQUIPMENT, APPARATUS, AND MATERIALS FROM DAMAGE. FAILURE TO DO SO WILL BE CAUSE FOR REJECTION OF ANY ITEM COMING UNDER QUESTION.
12. SHOP DRAWINGS: CONTRACTOR FOR THIS DIVISION SHALL SUBMIT SHOP DRAWINGS AND CATALOGUE DATA ON ALL MAJOR ITEMS OF EQUIPMENT AND SYSTEMS AND OTHER MATERIAL REQUESTED BY ARCHITECT/ENGINEER. SUBMIT PRODUCT DATA FOR SWITCHBOARDS, PANELBOARDS, TRANSFORMERS, WIRES, CABLE, SUPPORTING DEVICES, IDENTIFICATION COMPONENTS, LIGHT FIXTURES, FIRE ALARM SYSTEM AND COMPONENTS, WIRING DEVICES, MULTI-OUTLET RACEWAYS, CABINETS, AND BOXES. SUBMIT SIX COPIES WITHIN THIRTY (30) DAYS AFTER CONTRACT AWARD, AND IN NOT MORE THAN TWO GROUPS OF SUBMITTALS. SUBMITTALS SHALL CONSIST OF LAYOUTS, WORKING DRAWINGS, CUTS, AND OPERATING AND PERFORMANCE DATA. ALLOW FOUR (4) WEEKS FOR REVIEW AND APPROVAL OF THE SHOP DRAWINGS BY ENGINEER.
13. MATERIALS AND WORKMANSHIP: ALL MATERIALS AND EQUIPMENT SHALL BE NEW, OF BEST GRADE OF STANDARD MANUFACTURE, APPROVED BY UL, AND BE SO LABELED. FOR WIRE AND CABLE, MARKED AS REQUIRED BY ART. 310-2, NEC. INSTALLED BY SKILLED ELECTRICIAN, WORKING UNDER THE DIRECT SUPERVISION OF COMPETENT EXPERIENCED FOREMAN AND/OR SUPERINTENDENT. PRODUCTS SHALL BE INSTALLED IN A THOROUGH WORKMANLIKE MANNER, PRESENTING A NEAT, CLEAN-CUT APPEARANCE WHEN COMPLETED. ANY PART OR PARTS NOT MEETING THIS REQUIREMENT SHALL BE REPLACED OR REBUILT WITHOUT EXTRA EXPENSE TO OWNER.
14. WIRING METHODS: THE DRAWINGS ARE DIAGRAMMATIC AND ARE INTENDED TO SHOW THE LOCATIONS OF EQUIPMENT AND ARRANGEMENT OF CIRCUITS ONLY. EXACT LOCATIONS SHALL BE DETERMINED BY ACTUAL MEASUREMENT AT THE SITE. CONTRACTOR SHALL BE FULLY RESPONSIBLE FOR ALL RISES, DROPS, OFFSETS, ETC. NECESSARY TO AVOID CONFLICT WITH STRUCTURAL MEMBERS, AND SIMILAR ITEMS, WHEN INSTALLING ELECTRICAL CONDUITS. INSTALL EXPOSED CONDUIT AS SHOWN OR NOTED, PARALLEL TO HORIZONTAL AND VERTICAL LINES OF STRUCTURES. MAKE BENDS WITH 90 DEGREE TURN ONLY, OR WITH APPROVED FITTINGS.
15. CONDUIT: FURNISH A COMPLETE RACEWAY SYSTEM FOR BUT NOT LIMITED TO FEEDER, BRANCH CIRCUITS, CONTROL WIRING, AND AUXILIARY SYSTEM WIRING.
    A. USE LIQUID TIGHT FLEXIBLE METAL CONDUIT AND FITTINGS FOR ALL MOTORIZED CONNECTIONS, WHERE EQUIPMENT IS SUBJECT TO MOVEMENT, OR LOCATED OUTDOOR.
    B. WHERE ENTERING PANELS, PULL BOXES, J-BOXES, OR OUTLET BOXES, SECURED IN PLACE WITH WITH LOCK-NUTS INSIDE AND OUTSIDE, AND INSULATED BUSHING INSIDE.
    C. BENDS AND OFFSETS MADE WITH APPROVED TOOLS ONLY. BENDS OR OFFSETS IN WHICH THE PIPE IS CRUSHED OR DEFORMED SHALL NOT BE INSTALLED.
    D. USE EMT FOR INTERIOR DRY LOCATIONS, PVC FOR UNDERGROUND INSTALLATION, AND RIGID GALVANIZED STEEL FOR EXPOSED LOCATIONS SUBJECT TO DAMAGE.
17. OUTLET AND JUNCTION BOXES: FURNISH AND INSTALL ALL JUNCTION BOXES REQUIRED TO FACILITATE INSTALLATION OF THE VARIOUS CONDUIT SYSTEMS. JUNCTION BOXES SHALL BE SUITABLE FOR ENVIRONMENT AND APPLICATION USED FOR.
18. WIRE AND CABLE: ALL WIRE AND CABLE SHALL:
    A. BE NEW AND OF SOFT DRAWN, ANNEALED, COPPER HAVING A CONDUCTIVITY OF NOT LESS THAN 98% OF THAT OF PURE COPPER. EACH WIRE CONTINUOUS WITHOUT WELD, SPLICE OR JOINT THROUGHOUT ITS LENGTH; UNIFORM IN CROSS SECTION AND FREE FROM FLAWS, SCALES, AND OTHER IMPERFECTIONS.
    B. UNLESS OTHERWISE SPECIFIED OR NOTED, WIRES SHALL BE #12 AWG (FOR PHASE, NEUTRAL, AND GROUND CONDUCTORS) TYPE THW, THWN, THHN, AS MANUFACTURED BY TRIANGLE, GENERAL ELECTRIC, OKONITE, OR ANACONDA.
    C. NOT BE DRAWN INTO A CONDUIT UNTIL ALL WORK WHICH MAY CAUSE INJURY TO INSULATION IS COMPLETE, WHERE TWO OR MORE CIRCUITS RUN TO A SINGLE OUTLET BOX, TAG EACH CIRCUIT AS A GUIDE.
    D. HAVE ALL STRANDED CONDUCTORS FURNISHED WITH COPPER CONNECTING LUGS, DRILLED, OR REAMED THE FULL DIAMETER OF THE BARE CONDUCTORS. MAINS AND FEEDERS SHALL BE RUN THEIR ENTIRE LENGTH IN CONTINUOUS PIECES WITHOUT JOINTS OR SPLICES.
22. SWITCHES: FURNISH AND INSTALL ALL FUSIBLE AND NON-FUSIBLE SWITCHES AS REQUIRED BY CODES, WHETHER OR NOT SHOWN AND/OR NOTED. SWITCHES SHALL BE:
    A. HEAVY DUTY WITH NEMA-1 OR 3R ENCLOSURE, AS REQUIRED, AND BE PROVIDED WITH PAD-LOCKING FEATURE.
    B. PROVIDED AT EACH MOTOR THAT IS OUT OF SIGHT OF THE SWITCH OR PANEL FROM WHICH FED; AND BE NON-FUSIBLE DISCONNECT FOR SUCH USE.
    C. SWITCH MANUFACTURER SHALL BE GE, WESTINGHOUSE, OR SQUARE D.
    D. DISCONNECT SWITCHES INSTALLED OUTSIDE THE BUILDING SHALL BE IN NEMA-3 ENCLOSURES.
    E. FUSIBLE SWITCH-STARTER UNITS: EACH UNIT SHALL BE TOTALLY ENCLOSED AND EFFECTIVELY BARRIERED, MANUALLY OPERATED QUICK-MAKE, QUICK BREAK, HORSEPOWER RATED STARTER. PROVIDE CLASS R TYPE REJECTION FUSE CLIPS.
    F. IDENTIFY EACH DEVICE WITH NAMEPLATE SHOWING THE LOAD SERVED, MATCHING THE EXISTING NAMEPLATES.
23. WIRING DEVICES: FURNISH AND INSTALL ALL WIRING DEVICES AS INDICATED ON THE DRAWINGS. DEVICES SHALL IN ALL CASES BE SUITABLE FOR THE USE INTENDED AND SHALL HAVE VOLTAGE AND CURRENT RATINGS ADEQUATE FOR THE LOADS TO BE SERVED.
    A. MOUNTING: HEIGHTS OF ALL DEVICES ARE FROM FINISH FLOOR TO CENTERLINE OF DEVICE. DEVICES SHOWN ON THE DRAWINGS IN GROUPS OF TWO OR MORE SHALL BE LOCATED HORIZONTALLY IN SUCH A MANNER AS TO BE CLOSE AS POSSIBLE FROM THE CENTERLINE OF THE FIRST DEVICE TO THE CENTERLINE OF THE NEXT DEVICE UNLESS OTHERWISE NOTES.
    B. WALL SWITCHES: SHALL BE LEVITON DECORA TYPE, WHITE IN COLOR. USE CORRESPONDING DOUBLE POLE, THREE-WAY, FOUR-WAY, KEYED AND DIMMER SWITCHES WHERE NOTES. MOUNT AT 3'-10" A.F.F. AND WITHIN 6" OF ADJACENT DOOR JAMB, UNLESS OTHERWISE NOTED. USE "KEYED" SWITCHES IN LOCATIONS INDICATED.
    C. CONVENIENCE OUTLETS: SHALL BE GROUNDING TYPE, 20 AMP, 125 VOLT, LEVITON, WHITE COLOR. WEATHERPROOF DUPLEX OUTLETS SHALL BE LEVITON 5342 WITH SIERRA NO. WPD-8 PLATE. MOUNT AT 18" A.F.F., UNLESS OTHERWISE NOTED. PROVIDE NEMA 5-20R DEVICES UNLESS OTHERWISE INDICATED. PROVIDE SPECIFICATION (SPEC) GRADE HEAVY DUTY STRAIGHT BLADE DEVICES UNLESS OTHERWISE NOTED. PROVIDE HOSPITAL GRADE DEVICES WHERE INDICATED, OR AS REQUIRED BY CODES.
    D. ACCEPTABLE ALTERNATE MANUFACTURERS: SHALL BE LSI, H.E. WILLIAMS, HUBBELL, P&S AND BRYANT, PROVIDED THEIR DEVICES ARE OF THE SAME TYPE AND QUALITY AND THAT ONLY ONE MANUFACTURER SHALL BE USED THROUGHOUT THE WORK.
    E. PLATES: SHALL BE MATCHING TYPE FOR FINISHED AREAS AND GALVANIZED STEEL FOR AREAS WITH EXPOSED CONDUIT. PROVIDE STAINLESS STEEL PLATES FOR FLUSH MOUNTED DEVICES. PROVIDE CAST ALUMINUM WET LOCATION TYPE COVER PLATES WITH HINGED COVERS FOR DEVICES LOCATED OUTSIDE. GANG OUTLETS GROUPED TOGETHER UNDER A SINGLE WALL PLATE.
    F. INCANDESCENT DIMMERS: 120V SLIDE TO OFF, DECORA STYLE SIMILAR TO SWITCHES, WITH WATTAGE AS REQUIRED PER MANUFACTURER'S RECOMMENDATIONS. POWER FAILURE MEMORY. RFI SUPPRESSION. WHERE SWITCHES ARE SHOWN NEXT TO DIMMERS, PROVIDE MULTI-GANG COVER PLATES. PROVIDE DIMMERS WITH IVORY FINISH, SAME AS SWITCHES UNLESS OTHERWISE DIRECTED.
    G. INSTALL WIRING DEVICES AND ACCESSORIES PLUMB AND LEVEL, IN ACCORDANCE WITH MANUFACTURER'S WRITTEN INSTRUCTIONS, APPLICABLE REQUIREMENTS OF NEC AND IN ACCORDANCE WITH RECOGNIZED INDUSTRY PRACTICES TO FULFILL PROJECT REQUIREMENTS.
    H. TIGHTEN CONNECTORS AND TERMINALS, INCLUDING SCREWS AND BOLTS, IN ACCORDANCE WITH EQUIPMENT MANUFACTURER'S PUBLISHED TORQUE VALUES FOR WIRING DEVICES.
    I. COORDINATE WITH OTHER WORK, INCLUDING PAINTING, ELECTRICAL BOXES AND WIRING INSTALLATIONS, AS NECESSARY TO INTERFACE INSTALLATION OF WIRING DEVICES WITH OTHER WORK.
    J. INSTALL WIRING DEVICES AFTER WIRING WORK IS COMPLETED. INSTALL ONLY IN ELECTRICAL BOXES THAT ARE CLEAN; FREE FROM EXCESS BUILDING MATERIALS, DIRT, AND DEBRIS. INSTALL WALL PLATES AFTER PAINTING WORK IS COMPLETED.
    K. NO RECEPTACLE OR SWITCH OUTLETS SHALL BE MOUNTED BACK TO BACK. A MINIMUM OF ONE (1) STUD MUST BE BETWEEN OUTLETS.
    L. INSTALL RECEPTACLES WITH GROUND PIN UP. INSTALL SWITCHES WITH THE "ON" POSITION UP.
    M. ALL EXTERIOR DEVICES TO BE WEATHER PROOF AND EXTERIOR RECEPTACLES SHALL BE A GFCI TYPE DEVICE.
    N. ALL 120-VOLT RECEPTACLES OUTLETS LOCATED WITHIN SIX FEET OF SINKS SHALL HAVE GROUND FAULT CIRCUIT INTERRUPTION PROTECTION. GROUND FAULT OUTLETS SHALL BE CONNECTED ON DEDICATED NEUTRAL WIRE SERVING ONLY THE INDIVIDUAL OUTLET WITH THE GROUND FAULT PROTECTION.
    O. USE JUMBO SIZE WALL PLATES FOR OUTLETS INSTALLED IN MASONRY WALLS.
    P. DO NOT SHARE NEUTRAL CONDUCTORS ON DIMMERS.
24. FUSES: FUSES IN MAIN, FEEDER, AND BRANCH CIRCUIT SWITCHES, RATED 600 AMPS AND BELOW, FEEDING MOTORS, TRANSFORMERS, AND GENERAL PURPOSE CIRCUITS (UNLESS OTHERWISE SPECIFIED), SHALL BE UL LISTED AND LABELED AS CURRENT LIMITING, TIME-DELAY, 200,000 A.I.C., CLASS RK-5 FUSES SHALL BE BUSSMAN TYPE FRN-R (250V), AND FRS-R (600V).
25. GROUNDING: ALL CONDUIT WORK, MOTOR, STARTERS, AND OTHER ELECTRICAL EQUIPMENT WIRED AND CONNECTED BY THIS CONTRACTOR SHALL BE EFFECTIVELY AND PERMANENTLY GROUNDED IN FULL ACCORDANCE WITH NEC 250.
26. OTHER MATERIALS: FURNISH AND INSTALL ALL OTHER MATERIALS SUCH AS HARDWARE, TAPE, CLAMPS, CONNECTORS, FITTINGS, SUPPORTS, AND ALL OTHER APPURTENANCES REQUIRED TO COMPLETE THE WORK TO THE FULL INTENT OF THE CONTRACT. TERMINAL LUGS SHALL BE FURNISHED BY THE ELECTRICAL CONTRACTOR.
27. ELECTRICAL CONTRACTOR IS RESPONSIBLE FOR COORDINATING THE LOCATIONS OF ALL GTD'S (GENERATOR TRANSFER DEVICES), LIGHTING CONTROL EQUIPMENT, LOW VOLTAGE TRANSFORMERS AND OTHER ELECTRICAL ITEMS WHICH ARE ABOVE CEILINGS. THESE DEVICES SIMILAR TO ELECTRICAL JUNCTION BOXES ARE NOT ALLOWED BY NEC TO BE ABOVE HARD CEILINGS. THE ARCHITECT/OWNER WILL NOT ALLOW THE INSTALLATION OF ACCESS PANELS IN THE CEILINGS. BE AWARE THAT EQUIPMENT IN THOSE AREAS OF HARD CEILINGS WILL HAVE TO BE REMOTELY LOCATED TO THE NEAREST ACOUSTICAL LAY-IN CEILING AREAS.
28. ELECTRICAL MATERIAL AND EQUIPMENT: NO ELECTRICAL MATERIALS, APPARATUS, DEVICES, APPLIANCES, FIXTURES, OR EQUIPMENT SHALL BE SOLD OR INSTALLED IN THE CITY UNLESS THEY ARE IN CONFORMANCE WITH THE PROVISIONS OF THIS CODE, THE LAWS OF THE STATE OF TEXAS AND ANY APPLICABLE RULES AND REGULATIONS ISSUED UNDER THE AUTHORITY OF THE STATE STATUTES. THE MAKER'S NAME, TRADEMARK, OR OTHER IDENTIFICATION SYMBOL SHALL BE PLACED ON ALL ELECTRICAL MATERIALS, APPARATUS, DEVICES, APPLIANCES, FIXTURES, AND EQUIPMENT USED OR INSTALLED UNDER THE PROVISIONS OF THIS CODE. ALL ELECTRICAL MATERIALS AND EQUIPMENT SHALL BE LISTED AND LABELED FOR THE INTENDED USE AND SHALL BE INCLUDED IN A LIST PUBLISHED BY AN APPROVED AGENCY.

Infrastructure Associates

INFRASTRUCTURE ASSOCIATES, INC.
6117 RICHMOND AVENUE, SUITE 200
HOUSTON, TEXAS 77057
TBPE REGISTRATION NO. F-4506
(713) 622-0120 PH (713) 622-0557 FAX
WWW.IAHOUSTON.COM

STATE OF TEXAS
SEVAK KALANTARIANS
97498
LICENSED
PROFESSIONAL ENGINEER
2024-03-12

NOTES:

RECORD DRAWING

I HEREBY CERTIFY THAT THIS DRAWING REFLECTS THE IMPROVEMENTS CONSTRUCTED AS TO SIZE, LOCATION, AND GRADE; AND THAT THE CONSTRUCTION WAS IN SUBSTANTIAL COMPLIANCE WITH THE CONTRACT DOCUMENTS.

CONTRACTOR:_____ DATE:_____

TITLE:_____

DATE	REVISION	BY

FORT BEND COUNTY LID NO. 14

PUMP STATION UPGRADE AND REPLACEMENT TO SERVE FORT BEND COUNTY LID NO. 14

NOTES AND LEGEND

LJA Engineering, Inc.
1904 W. Grand Parkway North
Suite 100
Katy, Texas 77449
Phone 713.953.5200
Fax 713.953.5026
FRN-F-1386

LJA PROJECT NO.: 1301-1413

DRAWN: C.C. DESIGN: S.K. DATE: OCT 27, 2023

SCALE: NOT TO SCALE

SHEET NO. E1 OF E3

ADDENDUM NO. 1

PUMP STATION UPGRADE AND REPLACEMENT TO SERVE FBC LID NO. 14 - JOB NO. 1301-1413

Date\Time : Tue, 12 Mar, 2024 - 4:39pm User Name : cc2
Path\Name : K:\MEP\LJA\10 14\- Electrical -\E.dwg

REV	DESCRIPTION	BY	DATE
–	----	--	--/--/--

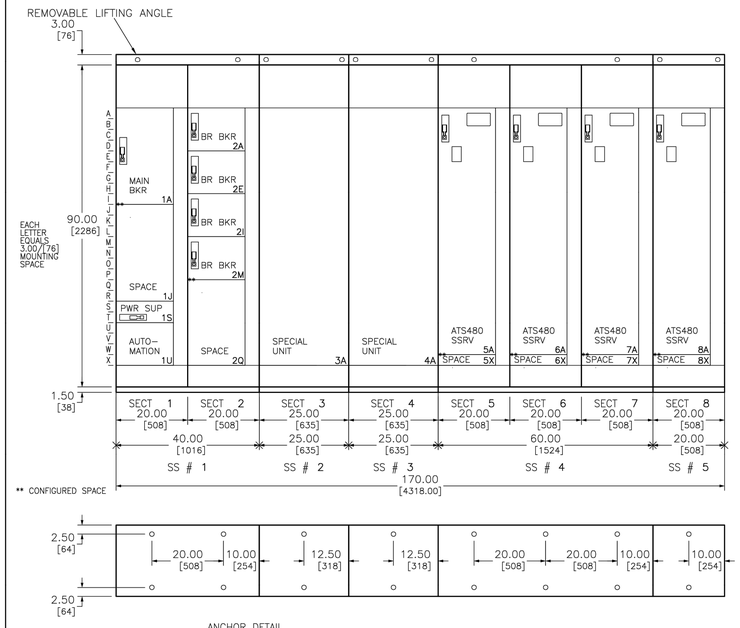

ANCHOR DETAIL

ENGLISH DIMENSIONS: INCHES

JOB NAME: LID 14 PS Improvement	EQUIPMENT DESIGNATION: MCCW R1
JOB LOCATION:	EQUIPMENT TYPE: MODEL 6 MOTOR CONTROL CENTER
DRAWN BY: (Q2C)	DRAWING TYPE: ELEVATION
ENGR:	SQUARE D by Schneider Electric
DATE: October 27 2023	
DRAWING STATUS: QUOTE	DWG# FQ-4502170-131204118-01 PG 1 OF 3 REV –

Page 5 of 18

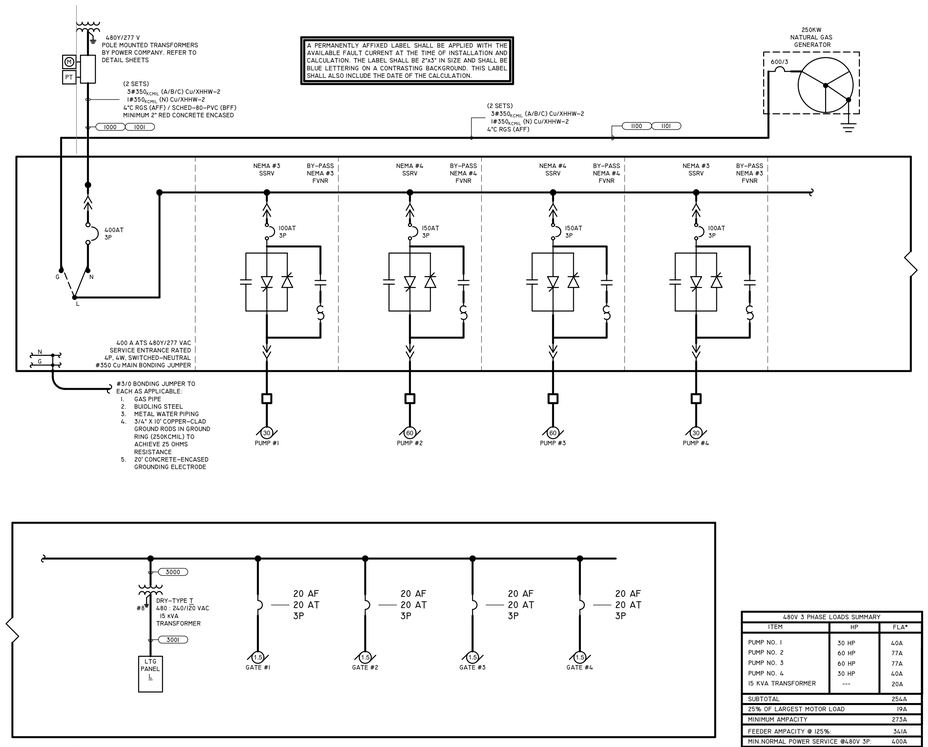

PROPOSED ELECTRICAL ONE LINE DIAGRAM SCALE: NTS 01

480V 3 PHASE LOADS SUMMARY

ITEM	HP	FLA*
PUMP NO. 1	50 HP	60A
PUMP NO. 2	60 HP	77A
PUMP NO. 3	60 HP	77A
PUMP NO. 4	50 HP	60A
15 KVA TRANSFORMER	---	20A
SUBTOTAL		254A
25% OF LARGEST MOTOR LOAD		19A
MINIMUM AMPACITY		273A
FEEDER AMPACITY @ 125%		341A
MIN.NORMAL POWER SERVICE @480V 3P		600A

* BASED ON SELECTED PUMP MFG DATA

Infrastructure Associates

INFRASTRUCTURE ASSOCIATES, INC.
6117 RICHMOND AVENUE, SUITE 200
HOUSTON, TEXAS 77057
TBPE REGISTRATION NO. F-4506
(713) 622-0120 PH (713) 622-0557 FAX
WWW.IAHOUSTON.COM

STATE OF TEXAS
SEVAK KALANTARIANS
97498
LICENSED
PROFESSIONAL ENGINEER
2024-03-12

NOTES:

REV	DESCRIPTION	BY	DATE
–	----	--	--/--/--

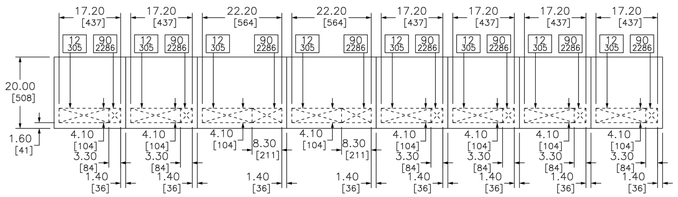

TOP VIEW

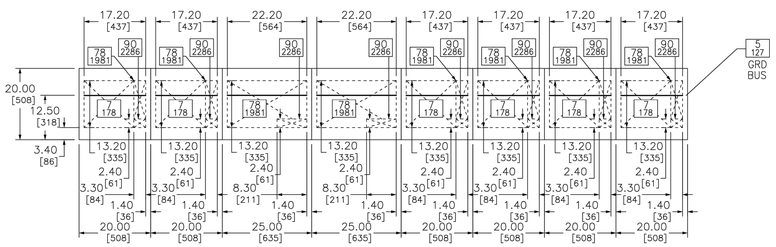

FLOOR VIEW

CROSSED AREA REPRESENTS CONDUIT ENTRY AREA. NUMBERS IN BOXES INDICATE VERTICAL CLEARANCE TO NEAREST OBSTRUCTION.

ENGLISH DIMENSIONS: INCHES

JOB NAME: LID 14 PS Improvement	EQUIPMENT DESIGNATION: MCCW R1
JOB LOCATION:	EQUIPMENT TYPE: MODEL 6 MOTOR CONTROL CENTER
DRAWN BY: (Q2C)	DRAWING TYPE: ELEVATION
ENGR:	SQUARE D by Schneider Electric
DATE: October 27 2023	
DRAWING STATUS: QUOTE	DWG# FQ-4502170-131204118-01 PG 2 OF 3 REV –

Page 6 of 18

REV	DESCRIPTION	BY	DATE
–	----	--	--/--/--

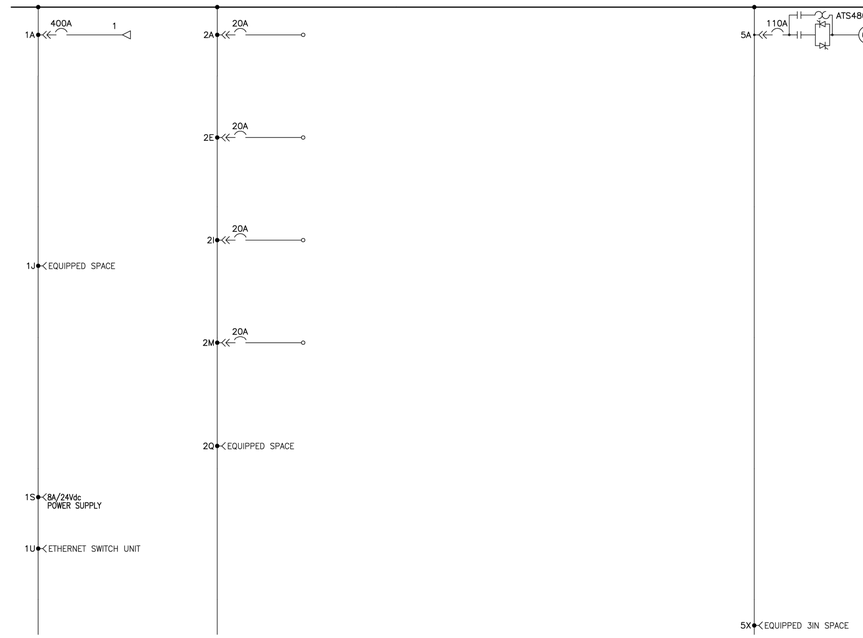

JOB NAME: LID 14 PS Improvement	EQUIPMEN
JOB LOCATION:	EQUIPMEN
DRAWN BY: (Q2C)	DRAWING
ENGR:	
DATE: October 27 2023	
DRAWING STATUS: QUOTE	DWG# 00

RECORD DRAWING

I HEREBY CERTIFY THAT THIS DRAWING REFLECTS THE IMPROVEMENTS CONSTRUCTED AS TO SIZE, LOCATION, AND GRADE; AND THAT THE CONSTRUCTION WAS IN SUBSTANTIAL COMPLIANCE WITH THE CONTRACT DOCUMENTS.

CONTRACTOR: _____ DATE: _____

TITLE: _____

DATE	REVISION	BY

FORT BEND COUNTY LID NO. 14

PUMP STATION UPGRADE AND REPLACEMENT TO SERVE FORT BEND COUNTY LID NO. 14

ONE LINE DIAGRAM

LJA Engineering, Inc.
1904 W. Grand Parkway North
Suite 100
Katy, Texas 77449
Phone 713.953.5200
Fax 713.953.5026
FRN-F-1386

LJA PROJECT NO.: 1301-1413

DRAWN: C.C. DESIGN: S.K. DATE: OCT 27, 2023

SCALE: NOT TO SCALE

SHEET NO. E2 OF E3

ADDENDUM NO. 1

PUMP STATION UPGRADE AND REPLACEMENT TO SERVE FBC LID NO. 14 – JOB NO. 1301-1413

Date\Time : Tue, 12 Mar 2024 - 4:39pm User Name : cc2
Path\Name : K:\MEP\LJA\LID 14\- Electrical -\E.dwg

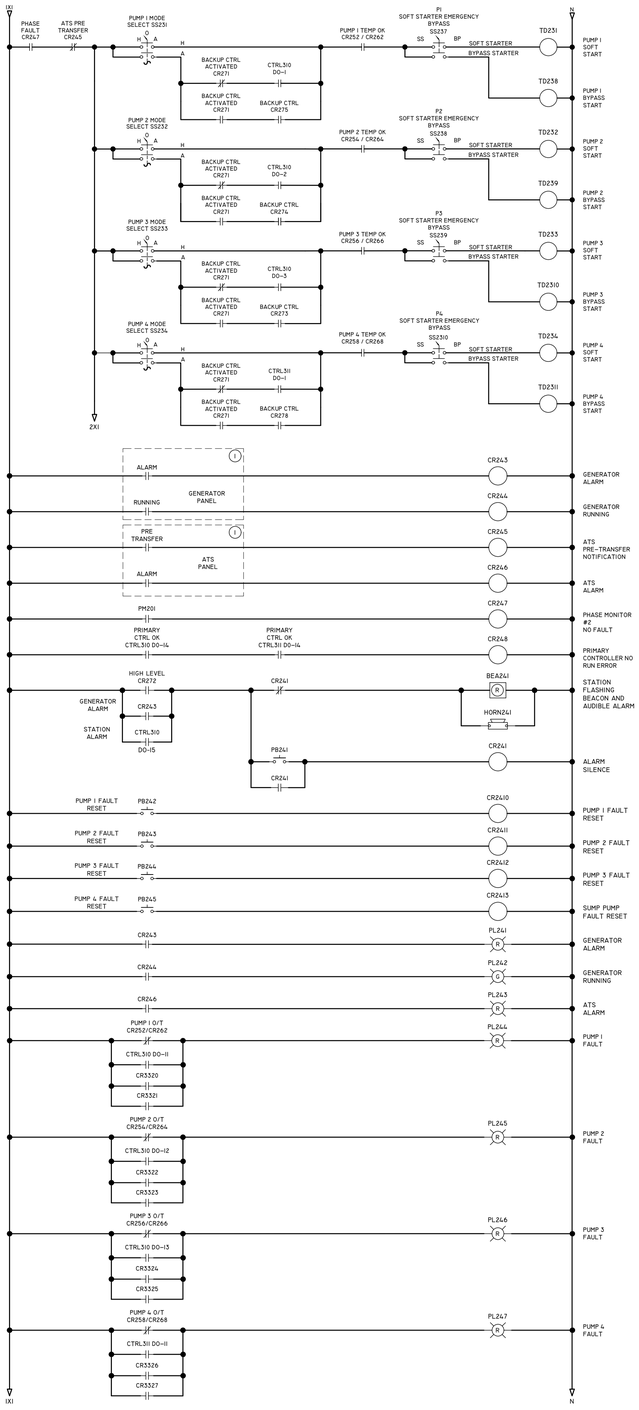

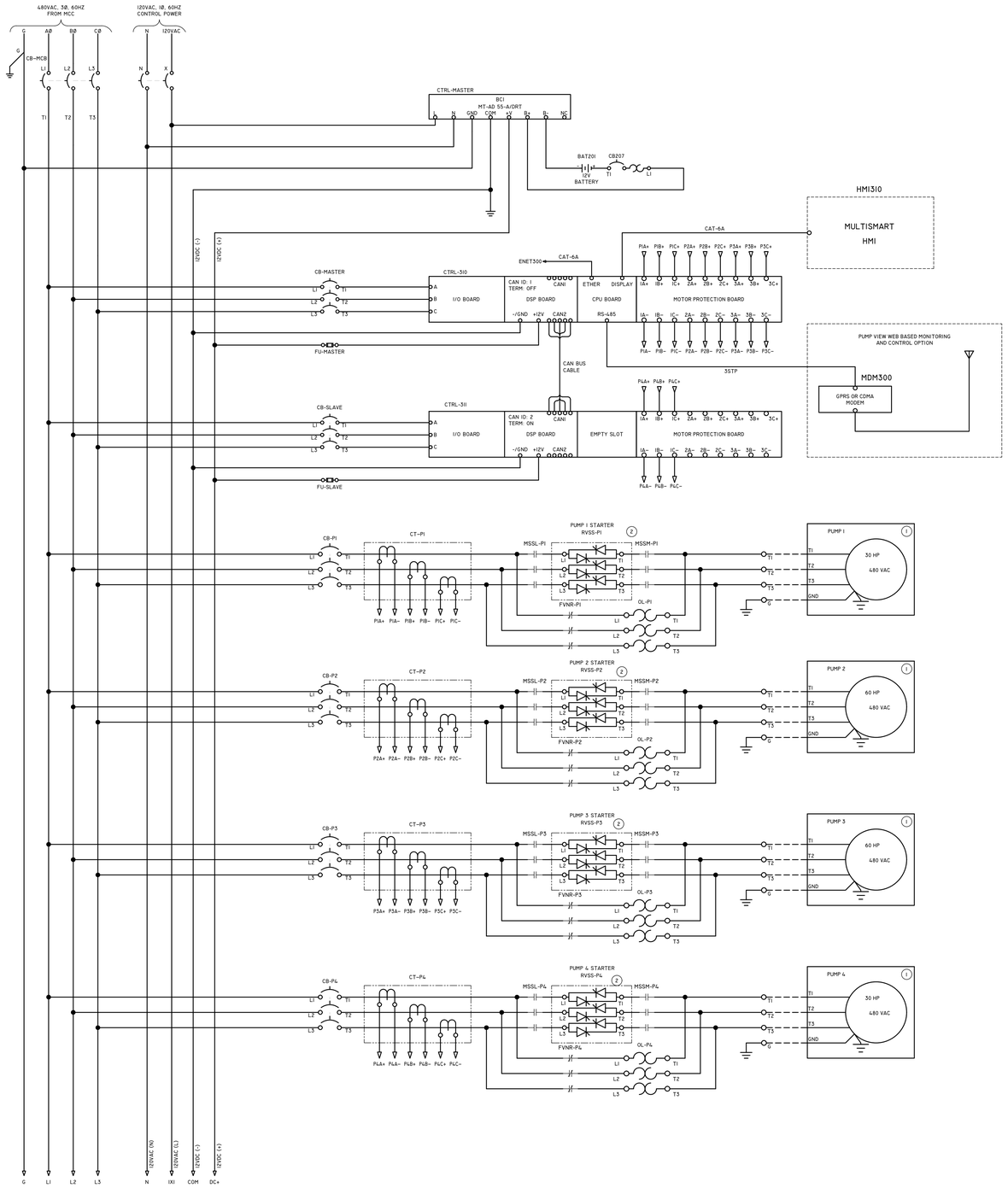

Infrastructure Associates

INFRASTRUCTURE ASSOCIATES, INC.
6117 RICHMOND AVENUE, SUITE 200
HOUSTON, TEXAS 77057
TBPE REGISTRATION NO. F-4506
(713) 622-0120 PH (713) 622-0557 FAX
WWW.IAHOUSTON.COM

STATE OF TEXAS
SEVAK KALANTARIANS
97498
LICENSED PROFESSIONAL ENGINEER
2024-03-12

NOTES:

RECORD DRAWING

I HEREBY CERTIFY THAT THIS DRAWING REFLECTS THE IMPROVEMENTS CONSTRUCTED AS TO SIZE, LOCATION, AND GRADE; AND THAT THE CONSTRUCTION WAS IN SUBSTANTIAL COMPLIANCE WITH THE CONTRACT DOCUMENTS.

CONTRACTOR: _____ DATE: _____

TITLE: _____

DATE	REVISION	BY

FORT BEND COUNTY LID NO. 14

PUMP STATION UPGRADE AND REPLACEMENT TO SERVE FORT BEND COUNTY LID NO. 14

CONTROLS DIAGRAMS

LJA Engineering, Inc.
1904 W. Grand Parkway North
Suite 100
Katy, Texas 77449
Phone 713.953.5200
Fax 713.953.5026
FRN-F-1386

LJA PROJECT NO.: 1301-1413

DRAWN: C.C. DESIGN: S.K. DATE: OCT 27, 2023

SCALE: NOT TO SCALE

SHEET NO. E3 OF E3

ADDENDUM NO. 1

PUMP STATION UPGRADE AND REPLACEMENT TO SERVE FBC LID NO. 14 – JOB NO. 1301-1413

Date\Time : Tue, 12 Mar 2024 - 4:39pm User Name : cc2
Path\Name : K:\MEP\LJA\LID 14\ - Electrical - ~\E.dwg

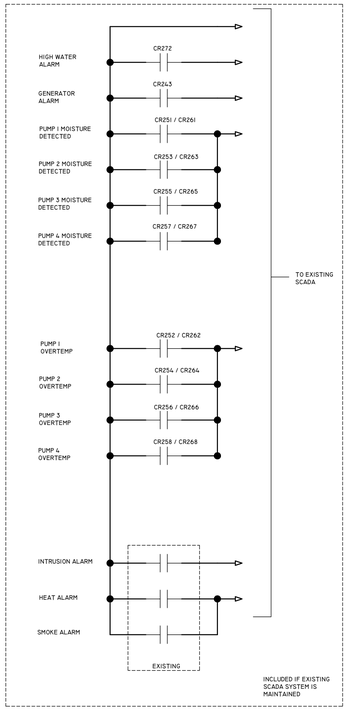

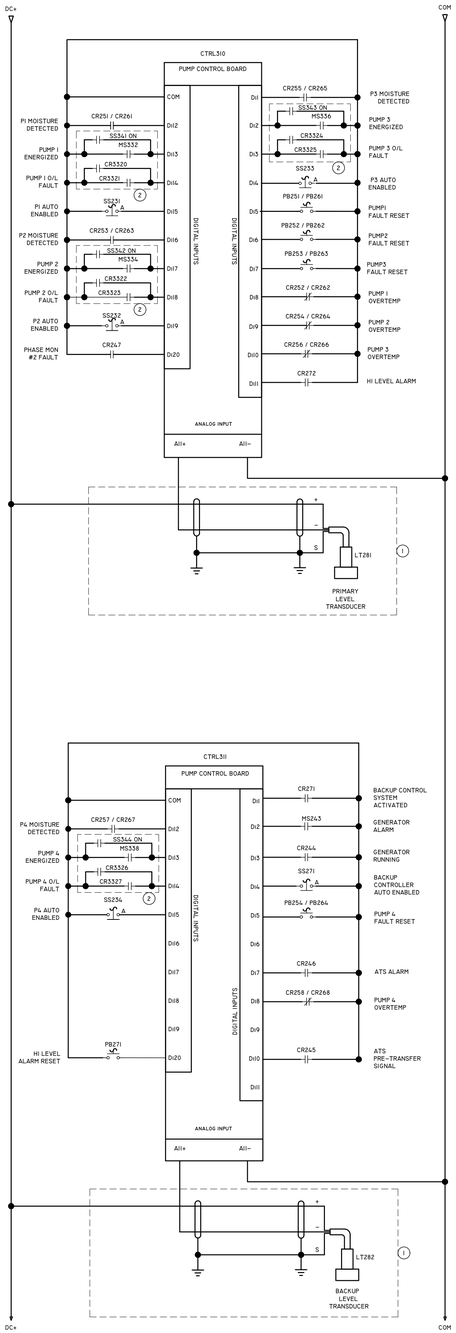

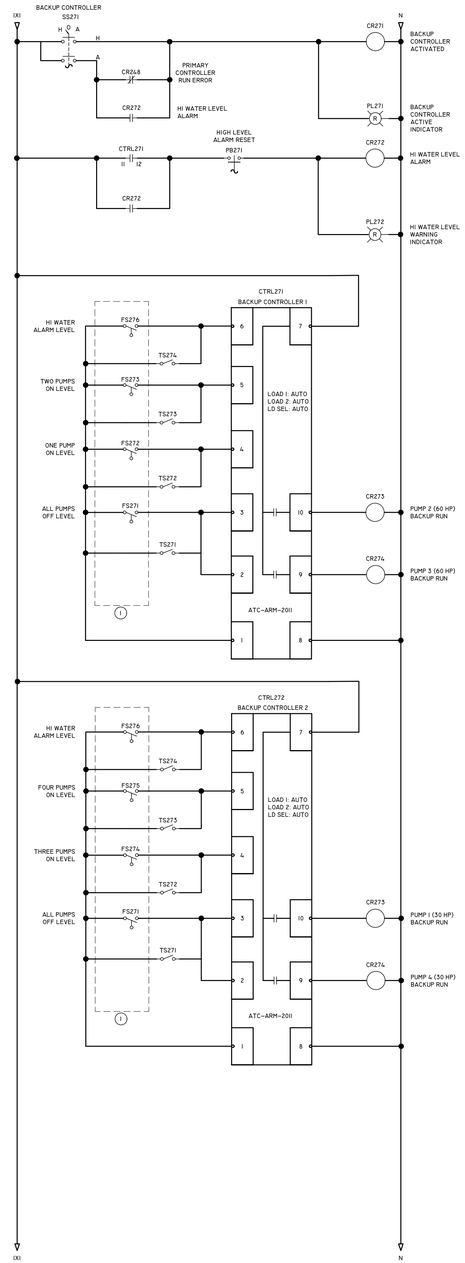

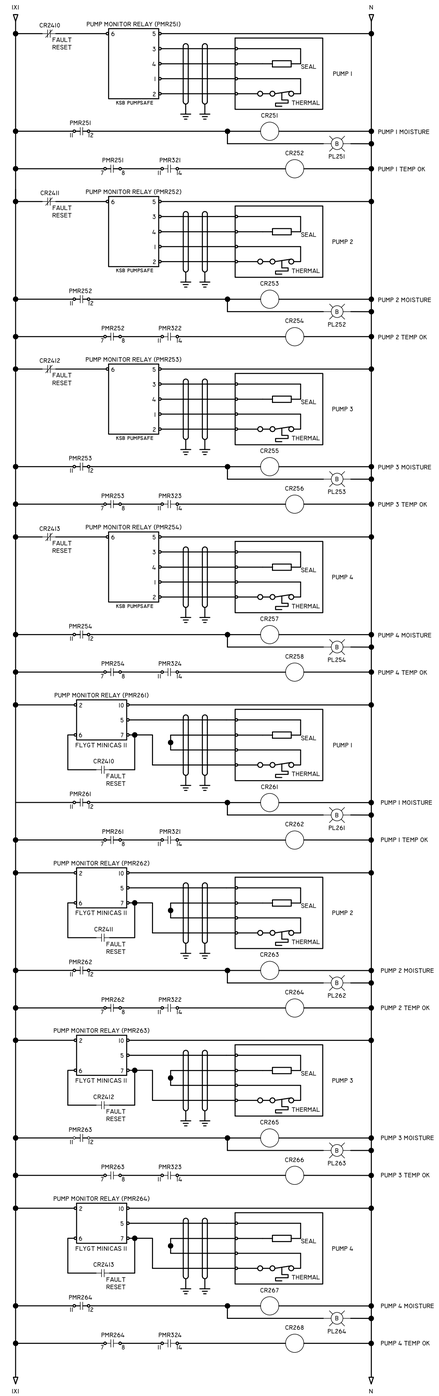

Infrastructure Associates
INFRASTRUCTURE ASSOCIATES, INC.
6117 RICHMOND AVENUE, SUITE 200
HOUSTON, TEXAS 77057
TBPE REGISTRATION NO. F-4506
(713) 622-0120 PH (713) 622-0557 FAX
WWW.IAHOUSTON.COM

STATE OF TEXAS
SEVAK KALANTARIANS
97498
LICENSED PROFESSIONAL ENGINEER
2024-03-12

NOTES:

RECORD DRAWING
I HEREBY CERTIFY THAT THIS DRAWING REFLECTS THE IMPROVEMENTS CONSTRUCTED AS TO SIZE, LOCATION, AND GRADE; AND THAT THE CONSTRUCTION WAS IN SUBSTANTIAL COMPLIANCE WITH THE CONTRACT DOCUMENTS.

CONTRACTOR: _____ DATE: _____

TITLE: _____

DATE	REVISION	BY

FORT BEND COUNTY LID NO. 14

PUMP STATION UPGRADE AND REPLACEMENT TO SERVE FORT BEND COUNTY LID NO. 14

CONTROLS DIAGRAMS

LJA Engineering, Inc.
1904 W. Grand Parkway North
Suite 100
Katy, Texas 77449
Phone 713.953.5200
Fax 713.953.5026
FRN-F-1386

LJA PROJECT NO.: 1301-1413

DRAWN: C.C. DESIGN: S.K. DATE: OCT 27, 2023

SCALE: NOT TO SCALE

SHEET NO. E4 OF 32

ADDENDUM NO. 1

PUMP STATION UPGRADE AND REPLACEMENT TO SERVE FBC LID NO. 14 – JOB NO. 1301-1413

Date\Time : Tue, 12 Mar 2024 – 4:39pm User Name : cc2
Path\Name : K:\MEP\LJA\LID 14_ Electrical - \E.dwg

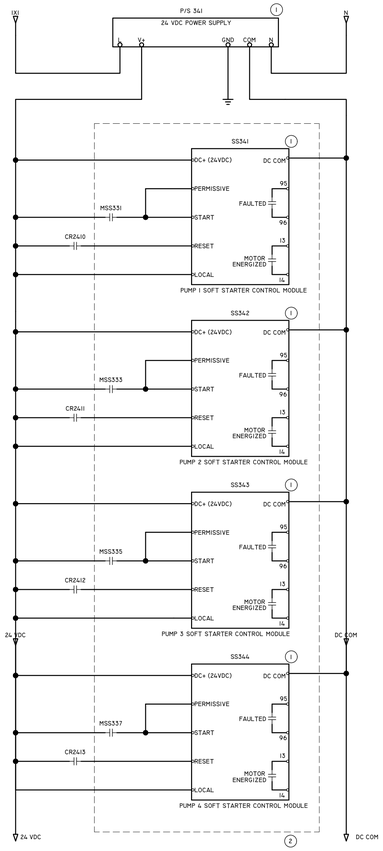

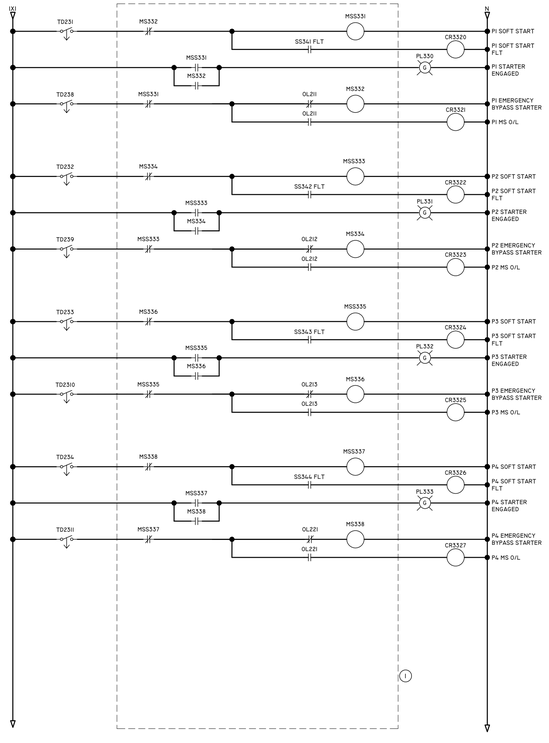

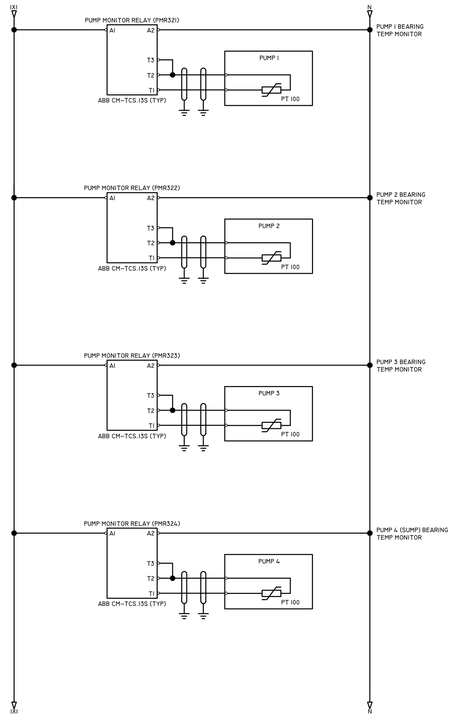

Infrastructure Associates

INFRASTRUCTURE ASSOCIATES, INC.
6117 RICHMOND AVENUE, SUITE 200
HOUSTON, TEXAS 77057
TBPE REGISTRATION NO. F-4506
(713) 622-0120 PH (713) 622-0557 FAX
WWW.IAHOUSTON.COM

STATE OF TEXAS
SEVAK KALANTARIANS
97498
LICENSED
PROFESSIONAL ENGINEER
2024-03-12

NOTES:

RECORD DRAWING

I HEREBY CERTIFY THAT THIS DRAWING REFLECTS THE IMPROVEMENTS CONSTRUCTED AS TO SIZE, LOCATION, AND GRADE; AND THAT THE CONSTRUCTION WAS IN SUBSTANTIAL COMPLIANCE WITH THE CONTRACT DOCUMENTS.

CONTRACTOR:_____ DATE:_____

TITLE:_____

DATE	REVISION	BY

FORT BEND COUNTY LID NO. 14

PUMP STATION UPGRADE AND REPLACEMENT TO SERVE FORT BEND COUNTY LID NO. 14

CONTROLS DIAGRAMS

LJA Engineering, Inc.
1904 W. Grand Parkway North
Suite 100
Katy, Texas 77449
Phone 713.953.5200
Fax 713.953.5026
FRN-F-1386

LJA PROJECT NO.: 1301-1413

DRAWN: C.C. DESIGN: S.K. DATE: OCT 27, 2023

SCALE: NOT TO SCALE

SHEET NO. E5 OF 32

ADDENDUM NO. 1

PUMP STATION UPGRADE AND REPLACEMENT TO SERVE FBC LID NO. 14 – JOB NO. 1301-1413

Date\Time : Tue, 12 Mar 2024 - 4:39pm User Name : cc2
Path\Name : K:\MEP\LJA\LID 14\- Electrical -\E5.dwg

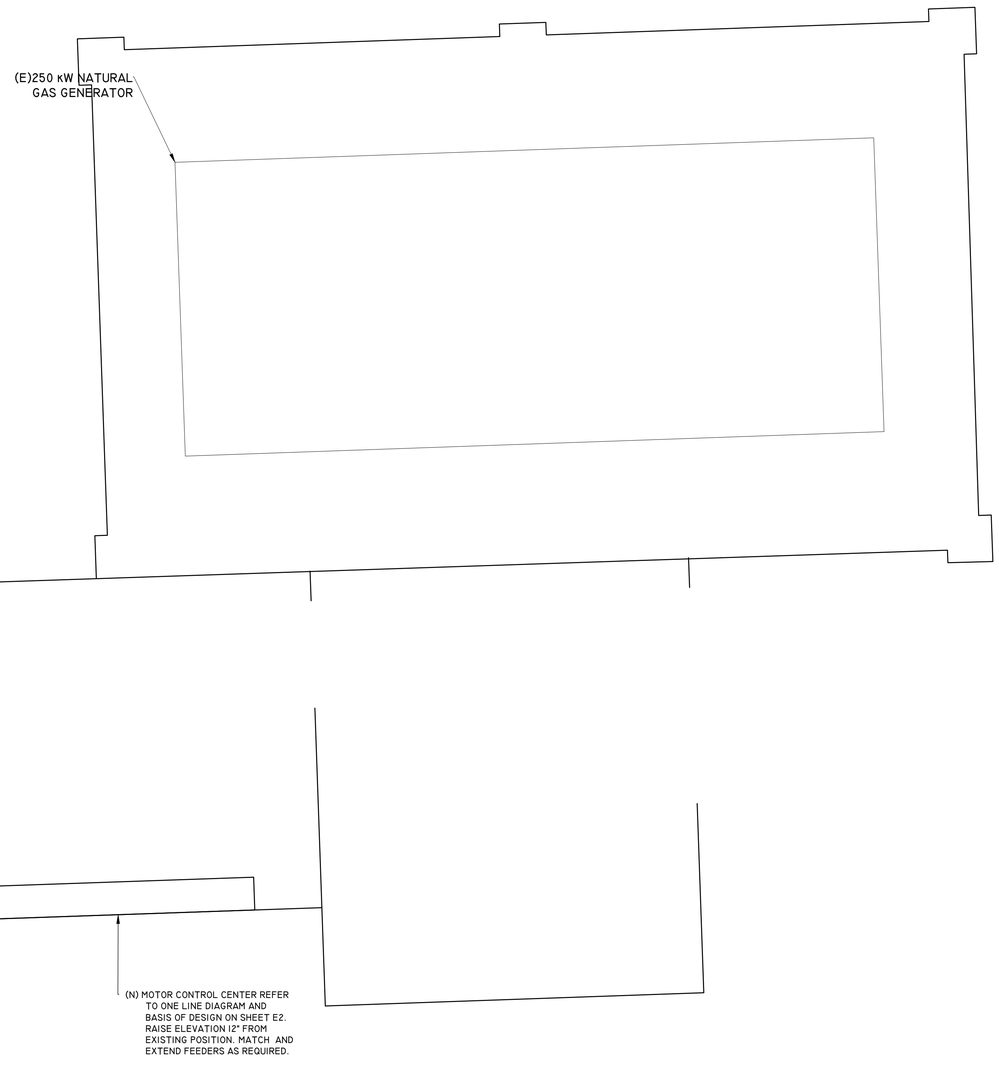

2 FLOOR PLAN
Scale: 1/2" = 1'-0"

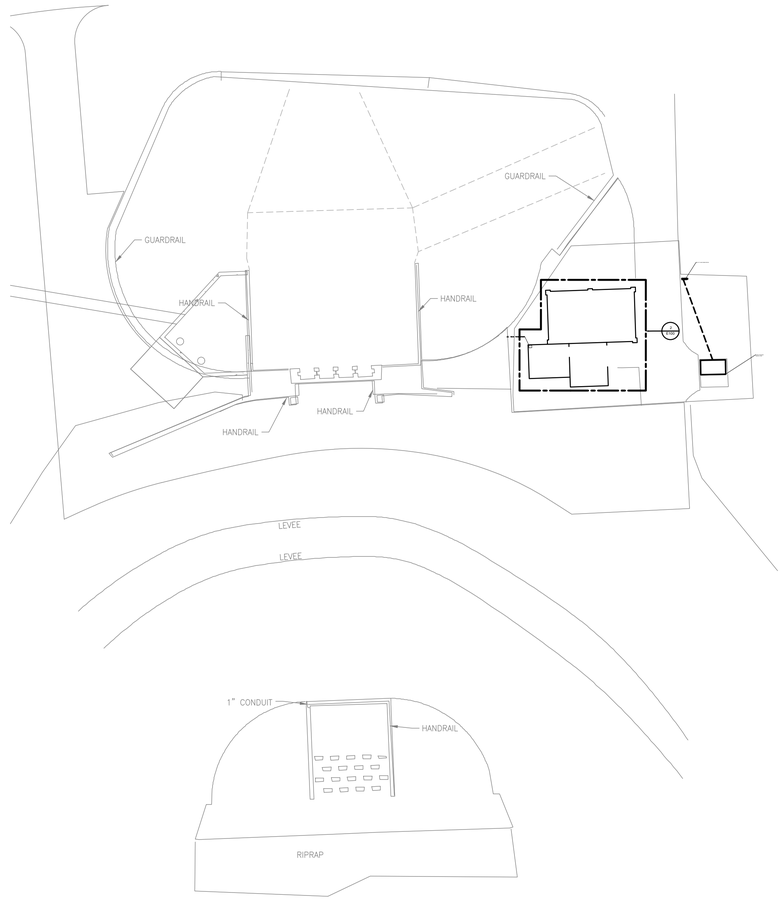

1 SITE PLAN
Scale: 1" = 20'

Infrastructure Associates
INFRASTRUCTURE ASSOCIATES, INC.
6117 RICHMOND AVENUE, SUITE 200
HOUSTON, TEXAS 77057
TBPE REGISTRATION NO. F-4506
(713) 622-0120 PH (713) 622-0557 FAX
WWW.IAHOUSTON.COM

STATE OF TEXAS
SEVAK KALANTARIANS
97498
LICENSED PROFESSIONAL ENGINEER
2024-03-12

NOTES:

RECORD DRAWING
I HEREBY CERTIFY THAT THIS DRAWING REFLECTS THE IMPROVEMENTS CONSTRUCTED AS TO SIZE, LOCATION, AND GRADE; AND THAT THE CONSTRUCTION WAS IN SUBSTANTIAL COMPLIANCE WITH THE CONTRACT DOCUMENTS.

CONTRACTOR: _____ DATE: _____

TITLE: _____

DATE	REVISION	BY

FORT BEND COUNTY LID NO. 14

PUMP STATION UPGRADE AND REPLACEMENT TO SERVE FORT BEND COUNTY LID NO. 14

SITE AND FLOOR PLANS

LJA Engineering, Inc.
1904 W. Grand Parkway North
Suite 100
Katy, Texas 77449
Phone 713.953.5200
Fax 713.953.5026
FRN-F-1386

LJA PROJECT NO.: 1301-1413

DRAWN: C.C. DESIGN: S.K. DATE: OCT 27, 2023

SCALE: AS NOTED

SHEET NO. E6 OF 32

PUMP STATION UPGRADE AND REPLACEMENT TO SERVE FBC LID NO. 14 – JOB NO. 1301-1413

ADDENDUM NO. 1

Date\Time : Tue, 12 Mar 2024 - 4:39pm User Name : cc2
Path\Name : K:\MEP\LJA\LID 14\- Electrical -\E.dwg

ELECTRICAL GENERAL DEMOLITION NOTES

1. ELECTRICAL CONTRACTOR SHALL REMOVE ELECTRICAL EQUIPMENT AS INDICATED BY KEY NOTES AND AS REQUIRED BY SCOPE OF DEMOLITION WORK. REFER TO ARCHITECTURAL DRAWINGS FOR ALL WALLS DESIGNATED FOR REMOVAL.
2. BEFORE ANY ELECTRICAL EQUIPMENT OR OUTLET REMOVAL, IDENTIFY AND DISCONNECT THE POWER SUPPLY TO IT. VERIFY WITH OWNER LOADS THAT MUST REMAIN IN SERVICE AND DO NOT DISCONNECT THESE.
3. REMOVE ALL RELATED LINE SIDE AND LOAD SIDE FEEDERS (WIRES AND CONDUITS) IN ENTIRETY FOR EQUIPMENT INDICATED OR REQUIRED TO BE REMOVED.
4. LEAVE OVERCURRENT PROTECTION DEVICE FOR EQUIPMENT INDICATED TO BE REMOVED IN PLACE UNLESS NOTED OTHERWISE.
5. ALL REMOVED EQUIPMENT IS PROPERTY OF OWNER AND SHALL BE STORED AT OWNER DESIGNATED LOCATION FOR INSPECTION. CONTRACTOR IS RESPONSIBLE FOR REMOVAL AND DISPOSAL OF EQUIPMENT OWNER DOES NOT INTEND TO KEEP, STORE, OR REUSE.
6. REMOVE ALL ELECTRICAL, TELEPHONE, AND DATA OUTLETS IN WALLS DESIGNATED FOR DEMOLITION ON ARCHITECTURAL AND/OR ELECTRICAL PLANS. REMOVE RELATED CIRCUITS SERVING THE DEVICES IN THEIR ENTIRETY. VERIFY ALL ABANDONED DATA CABLES ABOVE CEILINGS AND IN OTHER PLENUMS WITH OWNER AND REMOVE THEM AS DIRECTED BY OWNER.
7. WHERE EXISTING OUTLETS AND DEVICES (RECEPTACLES OR LUMINAIRES) TO REMAIN IN SERVICE SHARE SAME BRANCH CIRCUIT AS OUTLETS (RECEPTACLES OR LUMINAIRES) TO BE REMOVED. ELECTRICAL CONTRACTOR SHALL ENSURE CONTINUITY OF THE EXISTING AFTER REMOVAL. THIS CONDITION MAY NOT HAVE BEEN IDENTIFIED ON ELECTRICAL DEMOLITION DRAWINGS. ELECTRICAL CONTRACTOR SHALL FIELD VERIFY SUCH CONDITION.
8. LUMINAIRES SHALL BE REMOVED AS INDICATED ON ARCHITECTURAL REFLECTED CEILING OR ELECTRICAL DEMOLITION PLANS. DISPOSE OF ALL FIXTURES AND LAMPS OWNER DOES NOT INTEND TO KEEP. REMOVE ALL RELATED BRANCH CIRCUITING, WIRING, SWITCHES, OVERCURRENT PROTECTION DEVICES, AND ALL OTHER RELATED ELECTRICAL ITEMS.
9. COORDINATE ARCHITECTURAL REQUIREMENTS FOR EXISTING CEILING GRID SYSTEM. ELECTRICAL CONTRACTOR SHALL PRESERVE AND PROTECT CEILING TILES AND SUPPORTING T'S WHEN REMOVING ELECTRICAL COMPONENTS FROM ABOVE LAY-IN CEILING AS REQUIRED.
10. REMOVE ALL ABANDONED FEEDERS (CONDUITS AND WIRING) IN AREA OF CONSTRUCTION. PROPERLY SUPPORT ALL REMAINING EXISTING CONDUIT AND BOXES AFFECTED. PAINT REUSED AND EXPOSED CONDUIT AND BOXES TO MATCH WALL.
11. WHERE PANELBOARDS ARE INDICATED TO BE REPLACED AND FEEDER AND BRANCH CIRCUITS ARE TO REMAIN IN SERVICE, CONTRACTOR SHALL PROTECT THEM FOR REUSE DURING CONSTRUCTION PHASE OF THE WORK.
12. ELECTRICAL CONTRACTOR SHALL INSPECT EXISTING ELECTRICAL CIRCUITS INDICATED TO REMAIN IN SERVICE AND REUSED. CONTRACTOR SHALL PERFORM CONDUCTOR INSULATION TESTING IN ALL MAIN FEEDERS INTENDED TO BE REUSED IN ACCORDANCE WITH SPECIFICATION REQUIREMENTS. ALL CONDUCTORS FAILING TEST SHALL BE REPLACED WITH SAME SIZE AS EXISTING.
13. ELECTRICAL CONTRACTOR SHALL INSPECT ALL EXISTING JUNCTION BOXES AND REPLACE MISSING COVERS AND PLUG ALL UNUSED HOLES.
14. ELECTRICAL PLANS DO NOT SHOW ALL RISER CONDUITS WITHIN WALLS. WHEN FOUND, CONTRACTOR SHALL DETERMINE IF THEY ARE IN SERVICE. IF SO, CONTRACTOR SHALL RELOCATE THEM TO A NEW NEARBY WALL OR OTHER STRUCTURE. SPLICES IN THE WIRING WILL BE PERMITTED IN SUITABLE JUNCTION BOXES IF THE CONDUCTORS ARE IN SOUND CONDITION.

ELECTRICAL KEYED NOTES:

[1] DEMO EXISTING MCC. PRESERVE ALL EXISTING CABLING TO BE RECONNECTED TO NEW MCC DURING CONSTRUCTION.

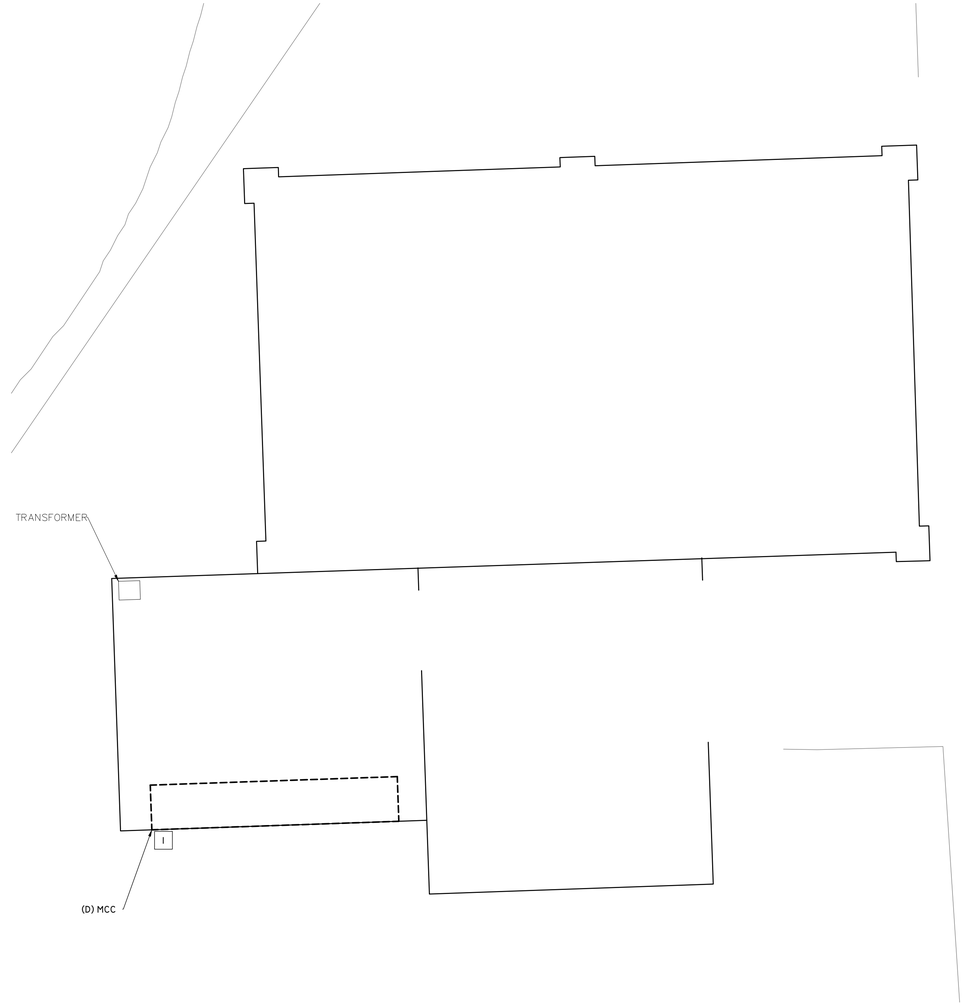

1 ENLARGED FLOOR PLAN - DEMOLITION

Scale: 3/8" = 1'

Infrastructure Associates

INFRASTRUCTURE ASSOCIATES, INC.
6117 RICHMOND AVENUE, SUITE 200
HOUSTON, TEXAS 77057
TBPE REGISTRATION NO. F-4506
(713) 622-0120 PH (713) 622-0557 FAX
WWW.IAHOUSTON.COM

STATE OF TEXAS
SEVAK KALANTARIANS
97498
LICENSED
PROFESSIONAL ENGINEER
2024-03-12

NOTES:

RECORD DRAWING

I HEREBY CERTIFY THAT THIS DRAWING REFLECTS THE IMPROVEMENTS CONSTRUCTED AS TO SIZE, LOCATION, AND GRADE; AND THAT THE CONSTRUCTION WAS IN SUBSTANTIAL COMPLIANCE WITH THE CONTRACT DOCUMENTS.

CONTRACTOR:_____ DATE:_____

TITLE:_____

DATE	REVISION	BY

FORT BEND COUNTY LID NO. 14

PUMP STATION UPGRADE AND REPLACEMENT TO SERVE FORT BEND COUNTY LID NO. 14

DEMOLITION FLOOR PLAN

LJA Engineering, Inc.
1904 W. Grand Parkway North
Suite 100
Katy, Texas 77449
Phone 713.953.5200
Fax 713.953.5026
FRN-F-1386

LJA PROJECT NO.: 1301-1413

DRAWN: C.C. DESIGN: S.K. DATE: OCT 27, 2023

SCALE: NOT TO SCALE

SHEET NO. E7 OF 32

PUMP STATION UPGRADE AND REPLACEMENT TO SERVE FBC LID NO. 14 - JOB NO. 1301-1413

Date\Time : Tue, 12 Mar 2024 - 4:39pm User Name : cc2
Path\Name : K:\MEP\LJA\LID 14_Electrical - E.dwg

ADDENDUM NO. 1