TO: BIDDERS AND SUPPLIERS FOR:

Bid No. 2026-MPW-241 Orangegate Park Phase 1 Site Improvements

FROM: Pierce County Public Works Pierce County, WA

TO ALL BIDDERS AND SUPPLIERS:
THIS ADDENDUM SHALL BE ATTACHED TO THE INSIDE COVER OF THE PROJECT MANUAL AND BECOME A PART OF THE TERMS OF THE CONTRACT DOCUMENTS.

ACKNOWLEDGE RECEIPT OF THIS ADDENDUM ON THE BID PROPOSAL

1. **Project Manual –** the following specifications have been added or revised. All revisions to specifications previously included in the bid materials are shown in red in the attachments.
    a. 32 31 29 Split Rail Fence – Revised sections 1.05 A., 2.01 B., 2.02, 2.03, 2.05, 3.01 A., and 3.02. See attached.
    b. 32 33 00 Site Furnishings – Revised sections 1.05 A., 2.17, and 2.18 See attached.
    c. 32 84 00 Irrigation – Revised section 1.12 A. See attached.
    d. 32 90 00 Planting – Revised section 1.11 E. See attached.
    e. 32 91 00 Soil Preparation – Revised section 3.03 B. See attached.
    f. 33 30 00 Sanitary Sewer System – New Specification Section. See attached.
    g. 33 32 00 On-Site Sewer System – New Specification Section See attached.

2. **Drawings –** Changes have been to the following drawings. Changes are clouded and labeled with a revision triangle in the attachments. See attached.
    a. CE01 - TEMPORARY EROSION AND SEDIMENT CONTROL NOTES
    b. CD03 - SCHEDULE OF STRUCTURES
    c. CD24 - CULVERT PROFILES
    d. CP10 - ENTRY DRIVE ENLARGED VIEW
    e. S201 – STRUCTURAL DETAILS
    f. LD05 – DEMOLITION AND CLEARING PLANS
    g. LS01 – SITE DESIGN SCHEDULE, LEGEND, NOTES & ABBV
    h. LS04 – SITE DESIGN PLAN
    i. LS05 – SITE DESIGN PLAN
    j. LS09 – SITE DESIGN ENLARGEMENT
    k. LS12 – SITE DESIGN DETAILS
    l. LS19 – SITE DESIGN DETAILS

3. **Appendices –** Changes have been to the following Appendices. Changes are clouded and labeled with a revision triangle in the attachment. See attached.
    a. APPENDIX B: Romtec Restroom and Maintenance Building page 2B.

SECTION 32 31 29
SPLIT RAIL FENCE

PART 1 GENERAL

1.01 SCOPE OF WORK

A. Furnish all materials, equipment, labor, and related items necessary to complete the work on the Contract Drawings and/or Contract Specifications. The items of work to be performed shall include but are not limited to:
   1. Cedar wood, split rail fence.
   2. Concrete footings with metal hardware attachment to fence posts.
   3. All other related and incidental items required to complete the work shown on the Contract Drawings and as specified in the Contract Specifications.

1.02 GRADING RULES

A. Provide lumber in accordance with the West Coast Lumber Inspection Bureau, latest edition and as modified hereinafter.
B. Association grade mark and trademark must appear on each piece of material, or each shipment must be accompanied by an official certificate of inspection by lumber grading agency.

1.03 QUALITY ASSURANCE

A. In addition to complying with all pertinent codes and regulations, all materials of this section shall comply with the pertinent provisions of the West Coast Limber Inspection Bureau, latest edition for Western Red Cedar.
B. Before proceeding with any work, the Contractor shall inspect the site, carefully check all grades, and verify all dimensions and conditions affecting the work. The Contractor shall immediately notify the Owner's Representative of any discrepancy on line and level.
C. Maximum moisture content
   1. All materials to have maximum moisture content of 15 percent to 19 percent or less and shall be "Kiln-Dried" based upon lumber thickness.
   2. Furnish moisture content Certificates upon request.
D. Conformance with standards and tests: Materials and handling shall conform to the following organizations' standards for materials testing and handling. Each standard is hereafter referred to by its organizational designation only. All materials and handling techniques shall conform to the appropriate standard.
   1. American Wood Protection Association – AWPA Standards for wood preservation.
   2. American Wood Preservers Bureau – AWPB Standards for Pressure Treated Material.
   3. International Building Code (IBC), latest edition.
   4. Western Wood Products Association – WWPA Grading Rules for Lumber and Plywood.
   5. West Coast Lumber Inspection Bureau – WCLIB Grading Rules for Lumber or Plywood.
   6. ASTM A153 – Standards for Zinc Coating (Hot-Dip) on Iron and Steel hardware.
   7. ASTM A307 – Standards for Carbon Steel Externally Threaded Standard Fasteners.
   8. ASTM A563 – Standards for Carbon and Alloy Steel Nuts.
E. Site Inspections must be made by the Owner's Representative.
   1. Request Owner's Representative inspection at least 72 hours in advance of the time inspection is required. Inspections for the following is required:
      a. Prior to the start of installation for Owner's Representative review of staked locations.
      b. Substantial Completion of all work (development of physical punch list items).
      c. Physical Completion of all work (physical punch list items satisfactorily completed).

1.04 PRODUCT HANDLING, STORAGE, AND DELIVERY

A. Deliver materials to site at specified moisture content.
B. Store materials under cover, off the ground with adequate blocking and support. Do not store materials directly in contact with the ground. Stack lumber flat with spacers between each bundle to provide air circulation.
C. Protect finished appearance of all members and parts to be left exposed.
D. Store in a safe location, out of pedestrian and vehicular traffic, and protected from weather.
E. Repair or replace any damaged components before installation.

1.05 SUBMITTALS

A. Submit for Owner's Representative's review and approval:
1. Complete list of wood members with dimensions, sizes, and quantities. Include name and address of the supplier(s) for wood products.
~~2. Manufacturer's product data for wood preservative treatments and certification that treatment materials comply with requirements herein.~~

1.06 SAFETY REQUIREMENTS

A. Manage all wood fence materials used in the execution of the work to avoid loss into the surrounding site.
B. Cover adjacent areas with protective tarps or other approved means to prevent contamination of the surrounding surfaces and landscape with loose nails, screws, wood and metal scraps, and splinters.
C. Collect loose materials on a daily basis to avoid unintentional loss.

1.07 PROTECTION

A. Protect new work and work-in-progress from vandalism and damage that might be incurred by construction traffic, equipment, property, and persons.
B. Replace damaged products prior to substantial completion.

1.08 PERMITS, CODES, AND REGULATIONS

A. The Contractor shall obtain and pay for all necessary permits and fees as required by Local Authority and prevailing ordinances and/or codes.
B. The Contractor shall keep fully informed and shall comply with all existing laws, codes, ordinances, and regulations, which in any way affect the conduct of the work.

1.09 GUARANTEE

A. Guarantee work of this Contract Specification section for one (1) year against all defects of materials and workmanship. The guarantee period begins after the date of Substantial Completion.
B. Repair any damage caused by the settlement and defects at no cost to the Owner.

PART 2 PRODUCTS

2.01 HARDWARE

A. Provide all necessary nails, screws, bolts, nuts, and washers for proper installation of wood fence with attachments to concrete footings.
B. Provide hot dip galvanized finish ~~or stainless steel hardware~~ suitable for contact with pressure-treated wood and outdoor applications.
C. Use washers under all bolt head and nuts in contact with wood.

2.02 STEEL PLATE ~~CONNECTOR~~ STRAP

A. Provide ¼" thick hot-dip galvanized (HDG) steel straps. ~~Provide 12-gauge, ABU 66, Steel Plate Connectors; galvanize connectors after welding; manufactured by Simpson Strong-Tie Company Inc.; (800) 999-5099; www.strongtie.com; or approved equal~~.

2.03 NOT USED~~ WOOD TREATMENT~~

A. ~~Wood Preservative must be alkaline copper quaternary (ACQ), a water-based wood preservative that prevents decay from fungi, prevents deterioration due to insects, and creates a dry surface on treated surfaces. Basis of Design: "Preserve ACQ" as manufactured by Viance LLC and supplied by Capitol Lumber Inc.; 2835 Marvin Rd NE; Lacey, WA 98516; (360) 438-0760 or approved equal.~~

2.04 SPLIT RAIL FENCE

A. Cedar Split Rail Fencing manufactured by Idaho Cedar Sales; 221 Main Street; Troy, Idaho 83871; (208) 835-2161.
   1. Western Red Cedar wood, consisting of heartwood, with a maximum moisture content of 15 percent to 19 percent or less and "Kiln-Dried" based upon lumber thickness.
   2. Splinter free, and free of surface knots, burrs, and holes
   3. Rails must be standard weight red cedar split rail; 10' length x 14" girth.
   4. Posts must be standard weight red cedar split rail; 5'-4" length x 18" girth to fit 2 rails.

B. Or, approved equal.

2.05 NOT USED~~ LUMBER SCHEDULE~~

~~Product~~	~~Nominal Size~~	~~Grade~~	~~Wood Species~~
~~Fence Posts~~	~~6" x 6"~~	~~No 2 or better~~	~~Western Red Cedar~~
~~Fence Rails~~	~~2" x 4"~~	~~No. 2 or better~~	~~Western Red Cedar~~

PART 3 EXECUTION

3.01 INSTALLATION

A. Construct concrete footings and crown the top of the concrete footings. Embed the lower part of hardware post straps ~~anchors~~, and secure straps ~~anchors~~ on wood posts as detailed in the plans. ~~For bolt connections, drill pilot holes 1/16" larger diameter than the bolt diameter.~~

B. Install all posts plumb. Allow additional height for adjustment of horizontal members in the event that post bases are not installed at exact, equal elevations.

C. Install all rails parallel to finish grade. Prior to making final connection, trim added height from vertical members to achieve the intent of the drawings.

3.02 NOT USED~~ WOOD TREATMENT~~

A. ~~Provide preservative treatment to AWPA Quality Standard C2 on all wood members.~~

B. ~~Treat all cut surfaces, bolt holes, and contact surfaces with Wood Treatment per manufacturer's written instructions.~~

3.03 WORKMANSHIP

A. Carefully layout, fit, and install miscellaneous wood fence and footing items. Use sufficient hardware to insure rigidity and permanence.

3.04 MISCELLANEOUS

A. Provide all miscellaneous carpentry work including furring, blocking, and bracing.

3.05 CLEAN-UP

A. Remove all construction debris including sawdust, wood scraps, and splinters from all adjacent and surrounding surfaces and landscaped areas as work progresses and at completion of work.
B. Use magnets or metal detectors to verify for the Owner's Representative that no loose nails or screws remain in surrounding soils.
C. Do not leave any nail, screw ends or heads, or other hardware sticking out of face of wood.

END OF SECTION

SECTION 32 33 00
SITE FURNISHINGS

PART 1 GENERAL

1.01 SUMMARY

A. Provide and install all site furnishings items hereinafter identified.

1.02 SCOPE OF WORK

A. Furnish all materials, equipment, labor and related items necessary to complete the work shown in the Contract Drawings and/or as specified in the Specifications. The work included in this section must include but is not limited to:
   1. Trash and Recycle Receptacle
   2. Bike Rack
   3. Picnic Table A
   4. Accessible Picnic Table A
   5. Picnic Table B
   6. Accessible Picnic Table B
   7. Bench
   8. Removable Bollard
   9. Dog Mitt Station
   10. Car Counter
   11. Trail Counter
   12. Vehicular Access Gate
   13. Vehicular Park Entry Sign
   14. Park Info & Rules Sign
   15. Trail Entry – Large Sign
   16. Trail Directional Sign
   17. Amenity Info & Rules Sign – Playground Rules
   18. Playground Welcome Sign
   19. Amenity Info & Rules Sign – Off Leash Area Rules
   20. Amenity Info & Rules Sign – Park Shelter Rules
   21. General Sign – Pedestrian Scale
   22. Low Profile Informational Sign
   23. Boardwalk
   24. Knoxbox

B. All other related items required to complete the work shown on the Contract Drawings and as specified in the Contract Specifications.

1.03 REFERENCES

A. This specification section incorporates by reference the latest revisions of the following documents.
   1. Pierce County Parks and Recreation – Sign Standards. Document dated 02/23/2017. (Appendix D)
      a. Sign standards document includes dimension, materials, mounting type, finishes, graphic standards, and general graphic layouts for all signs.
      b. Fonts and vector .eps artwork of all logos and symbols included in the Sign Standards document available from Pierce County Parks and Recreation.

c. Adobe InDesign templates of informational panels (Park Info and Rules, Playground Info and Rules, Maps, Etc.) available from Pierce County Parks and Recreation.

2. ASTM A53/A53M – Standard Specification for Pipe, Steel, Black, and Hot-Dipped, Zinc-Coated, Welded and Seamless; 2007.
3. ASTM A312/A312M – Standard Specification for Seamless, Welded, and Heavily Cold Worked Austenitic Stainless Steel Pipes; 2009.
4. ASTM A307 – Standard Specification for Carbon Steel Bolts, Studs, and Threaded Rod 60,000 PSI Tensile Strength.
5. All standards must include the latest additions and amendments as of the date of advertisement for bids.
6. Comply with environmental agencies, building codes and other local requirements that are more stringent than the above.
7. Comply with Title III of the Americans and Disabilities Act, Public Law 101-336.

1.04 QUALITY ASSURANCE

A. Before proceeding with any work, the Contractor must inspect the site, carefully check all grades, and verify all dimensions and conditions affecting the work. The Contractor must immediately notify the Owner's Representative of any discrepancy on line and level.
B. Site furnishing work must be performed by a company with experience in work of similar scope and quality.
C. Adhere to manufacturer's instructions for product storage and handling, assembly, installation, and maintenance.
D. Manufacturer's original factory finish must be intact for the installation of the furnishing to be considered satisfactory.
E. Standard Contract Specifications Reference Standards
   1. American Society for Testing Materials (ASTM), Latest Edition.
F. Site Inspections will be made by the Owner's Representative.
   1. Request Owner's Representative inspection at least 48 hours in advance of the time inspection is required. Inspections for the following is required:
      a. Inspection of temporarily marked/staked locations and alignments of site furnishings items and/or footings prior to installation.
      b. Substantial Completion of all work (development of physical punch list items).
      c. Physical Completion of all work (physical punch list items satisfactorily completed).

1.05 SUBMITTALS

A. For each product specified, submit the following for approval prior to delivery:
   1. Manufacturer's product data including:
      a. Preparation instructions and recommendations.
      b. Storage and handling requirements and recommendations.
      c. Manufacturer's written assembly and installation instructions.
      d. Maintenance instructions.
      e. Manufacturer warranties.
   2. Provide shop drawing for all panels and signs for review and approval prior to construction.
      a. Shop drawings must include sign type, footings with reinforcements, structure, hardware, lettering, font, icon use, materials, finishes, concrete finish, locations, and dimensions of each sign.
      b. Submit samples of all finish materials
      c. Manufacturer's written installation instructions, installation template, and attachment devices.

2. Provide shop drawing for the Trail and Car Counters for review and approval prior to construction.
   a. Shop drawings must include product type, footings, hardware, materials, finishes, locations, and layout of sensors.
   b. Manufacturer's project specific written installation instructions and installation layout.

1.06 DELIVERY, STORAGE, AND HANDLING

A. Deliver and store site furnishings items in accordance with manufacturer's written recommendations.
B. Handle all site furnishings with sufficient care to prevent scratches to the finish and other damage.
C. Deliver products in good condition.
D. Store products to prevent corrosion, deterioration, and damage.
E. Bent, dented, scratched, chipped, or otherwise damaged items are not acceptable and must be replaced by items and components in new condition.

1.07 ENVIRONMENTAL CONDITIONS

A. Do not install site furnishings items during heavy rain, freezing temperature, or snowfall.

1.08 PROTECTION

A. Protect new work and work-in-progress from vandalism and damage that might be incurred by construction traffic, equipment, property, and persons.
B. Replace damaged products before substantial completion as directed by Owner's Representative.

1.09 PERMITS, CODES, AND REGULATIONS

A. The Contractor must obtain and pay for all necessary permits and fees as required by Local Authority and prevailing ordinances and/or codes.
B. The Contractor must keep fully informed and must comply with all existing laws, codes, ordinances, and regulations, which in any way affect the conduct of the work.

1.10 CONDUCT OF WORK

A. The Contractor must continuously maintain a competent superintendent or foreman during the progress of the work, with the authority to act for the Contractor in all matters pertaining to the work.
B. The Contractor must confine operations to the working areas allotted by the Owner for operations, including material and equipment storage.
C. The Contractor must progressively clean the work site of debris and rubbish as the work proceeds.

1.11 GUARANTEE PERIOD

A. Guarantee work of this Contract Specification section for one (1) year against all defects of materials and workmanship. The guarantee period begins after the date of Substantial Completion.
B. Repair any damage caused by settlement and defects at no cost to the Owner.

PART 2 PRODUCTS

2.01 MATERIALS AND EQUIPMENT

A. As required to complete the work as shown on the Contract Drawings and/or as specified in the Contract Specifications.

2.02 CRUSHED SURFACING BASE COURSE

A. Provide thickness as shown on the Contract Drawings.
B. Base course aggregate shall be as specified in WSDOT Standard Specifications for Road and Bridge Construction: Section 9-03 Aggregates, as required to construct the project.

2.03 CAST-IN-PLACE CONCRETE

A. Include concrete footings, thickened concrete, and other items as specified in Section 03 30 00 Cast-In Place Concrete as required to construct the project.

2.04 REINFORCING BARS

A. All reinforcing steel shall conform to ASTM A615, number four (4) bar or otherwise indicated, unpainted, uncoated, free from rust, dirt and other defects, as required to construct the project.

2.05 SURFACE TREATMENTS

A. Surface treatment for manufactured products shall conform to manufacturer’s standard finish specifications.
B. Provide no treatments that void the warranty on manufacturer’s products.

2.06 HARDWARE

A. All metal hardware not supplied by the manufacturer including bolts, nuts, washers, and anchor bolts must be Stainless Steel Type 304 unless otherwise noted. All stainless steel bolts must have stainless steel nuts and standard cut stainless steel washers at each end; size respectively unless otherwise noted in Contract Drawings. Hardware not noted by size must be sufficient to draw and hold members securely.

2.07 TRASH/ RECYCLE RECEPTACLE

A. Provide Plaza Series, flared receptacle with 35-gallon black polyethylene liner, hinged top with dome for round receptacle and pedestal base. One receptacle to receive "Recycle " logo and the other to receive "Trash" logo. Color to be "Teal" Semi-gloss, as distributed by Tournesol Siteworks. www.tournesol.com
B. Installation type: Surface mount
C. Lid: Attached and welded on
D. Receptacle Liner: ABS
E. Or approved equal.

2.08 BIKE RACK

A. Provide “Emerson” bike rack. Manufactured by Landscapeforms; 7800 E. Michigan Ave., Kalamazoo, MI 49048; (269) 381-0396; https://www.landscapeforms.com/en-US/Pages/default.aspx.
   1. Installation type: Surface mount.
   2. Finish: Metallic Silver per manufacturer.

B. Or approved equal.

2.09 PICNIC TABLE A

A. Picnic Table A shall be “Southern PikNik” accessible aluminum picnic table as manufactured by Folding ChairsandTables.com; 1701 Whittle Springs Rd.; Knoxville, TN 37917; (888) 858-7529; sales@foldingchairsandtables.com; www.foldingchairsandtables.com.
   1. Finish: Matte Silver per manufacturer.

B. Or approved equal.

2.10 ACCESSIBLE PICNIC TABLE A

A. Accessible Picnic Table A shall be “Southern PikNik” ADA wheelchair accessible aluminum picnic table as manufactured by Folding ChairsandTables.com; 1701 Whittle Springs Rd.; Knoxville, TN 37917; (888) 858-7529; sales@foldingchairsandtables.com; www.foldingchairsandtables.com.
   1. Finish: Matte Silver per manufacturer.

B. Or approved equal.

2.11 PICNIC TABLE B

A. Provide Plaza Collection Steel Strap Table, Surface Mount, 36” square, Table, FW part no. F-7 Model PZ-1000-3636 with four (4) Plaza Collection Backless surface mount, 30" long, FW part no. F-7, Standard Seats, Model PZ-0400-30 per table. Color to be "Teal" Semi-gloss , as distributed by Tournesol Siteworks, www.tournesol.com

B. Or approved equal.

2.12 ACCESSIBLE PICNIC TABLE B

A. Provide Plaza Collection Steel Strap Table, ADA wheelchair accessible, surface mount, 36” square, FW part no. F-7, model PZ-1000-3636A with three (3) Plaza Collection Backless Bench, ADA Compatible, Surface Mount, 30" long, FW part no. F-7 ADA Seats, Model PZ-0400-30A benches per table. Color to be "Teal" Semi-gloss , as distributed by Tournesol Siteworks, www.tournesol.com.

B. Or approved equal.

2.13 BENCH

A. General: Provide Plaza Village Series, Model PZ-0100 surface-mount Bench with back and arm rests, six-foot length when located along the trail and eight-foot length for the location in the trailhead plaza. Color to be "Teal" Semi-gloss, as distributed by Tournesol Siteworks, www.tournesol.com.

B. Or approved equal.

2.14 REMOVABLE BOLLARD

A. Removable bollard shall be RP3503 - 3.5” outside diameter, 36” height. Manufactured by TrafficGuard, Inc.; P.O. Box 201, Geneva, IL 60134; (877) 727-7347; http://www.trafficguard.net; sales@traffiguard.net.
   1. Installation type: In-ground mount.
   2. Finish: Black with reflective warning label sticker per manufacturer. Place reflective warning label sticker on bollard per Owner’s Rep direction.
   3. Include additional sleeves for in-ground bollard receivers where shown on Contract Drawings.

B. Or approved equal.

2.15 DOG MITT STATION

A. Provide Modern Dog Kit; 54% recycled aluminum material; powder coated, brushed aluminum color, with stainless steel locking mechanism; Supplied by: PetPickUps.com; P.O. Box 460547, Denver, Co 80246; service@petpickups.com; www.petpickups.com; 303-443-8914.
   1. Kit Components
      a. Modern Dog Dispenser
      b. Modern Dog Sign
      c. Modern Dog Receptacle: 13 gallon locking receptacle with galvanized steel liner
      d. Universal key for dispenser and receptacle
   2. Bare Bone Mitts; 1 case = 3,000 mitts; Supplied by: PetPickUps.com; P.O. Box 460547, Denver, Co 80246; service@petpickups.com; www.petpickups.com; 303-443-8914.
B. Or approved equal.

2.16 DOG MITT STATION MOUNTING HARDWARE

A. Mounting hardware for the Off-Leash Area Waste Station to be a set of two One-Sided Post Clamps to fit 2-3/8" post. Material shall be aluminum and stainless steel; each set to include 2 of each of the following: clamps, stainless steel u-bolts, and sign fasteners. As manufactured and supplied by Sign Company Supply; 6088 Corte Del Cedro; Carlsbad; CA 92011; (760) 707-5424; sales@signcompanysupply.com.
B. Or approved equal.

2.17 CAR COUNTER

A. Provide ZELT Evo Cars ~~Counter for Car~~; with direction, 4 loops, activated manufactured by Eco-Counter (www.eco-counter.com).
B. Contact Eco-Counter for project specific layout and installation instructions for the sensors.
C. Power system:
   1. ~~Model 901~~ Battery
   ~~2. Four (4) Raygel connectors~~
   ~~3. Smart Connect~~
D. Sensor ~~and Logger~~ system:
   ~~1. PYRO – Passive infrared sensor.~~
   ~~2. Eco-Combo Logger.~~
   3. 4-loop ZELT Evo Cars ~~GW~~Electromagnetic Sensor
   4. Two (4) Loop Wire with four (4) watertight connectors
   5. ~~PYRO extension cable~~ 1 dry contact connector
E. Water-tight Enclosure
   1. Enclosure Hubbell Wiegmann Enclosure. Grainger Item # 52XC30 or approved alternate.
   2. Cord Connector: Liquid Tight Cord Connector w/ ¾" MNPT or approved alternate. Available from Grainger item # 2DPE6.
   3. Wire Connector: Rainbird WC20 Series Wire Connector or approved alternate.
F. Outer Vault box: Rainbird Super Jumbo Valve Box Model VBSPRH with locking green lid.
G. Or approved equal.

2.18 TRAIL COUNTER

A. Provide ~~Eco-Counter Multi~~ Standard Urban Multi Evo manufactured by Eco-Counter (www.eco-counter.com) or approved alternate.
B. Contact Eco-Counter for project specific layout and installation instructions for the sensors.

C. Power system:
1. (1) Model 901 Battery
2. Four (4) Raygel connectors
3. (1) Smart Connect

D. Sensor ~~and Logger~~ systems:
1. PYRO Eva Sensor - Passive infrared sensor.
2. ~~Eco-Combo Logger.~~
3. 4-loop ZELT Eva Sensor: ~~GW-~~Electromagnetic Sensor
4. Two (4) Loop Wire with four (4) watertight connectors

E. ~~Water-tight Enclosure~~
1. ~~Enclosure Hubbell Wiegmann Enclosure. Grainger Item # 52XC30 or approved alternate.~~
2. ~~Cord Connector: Liquid Tight Cord Connector w/ ¾" MNPT or approved alternate. Available from Grainger item # 2DPE6.~~
3. ~~Wire Connector: Rainbird WC20 Series Wire Connector or approved alternate.~~

F. ~~Outer Vault box: Rainbird Super Jumbo Valve Box Model VBSPRH with locking green lid or approved alternate.~~

2.19 VEHICULAR ACCESS GATE

1. Gate.
   a. Gate construction shall be a hinge-less design as shown on Contract Drawings, with a minimal swing/operation of 270 with latches, two (2) gate receptable posts, and roadway markers. The sleeve shall have grease fittings as shown on the fittings at the appropriate locations to allow regular maintenance.
   b. Galvanized steel gate post shall minimally conform to ASTM F1043 Group IA Intermediate Strength, with a minimum yield strength of 50,000 psi.
   c. Allow for thermal action resulting from the maximum range (change) in ambient temperature in the design, fabrication, and installation of gate, to prevent opening of joints, buckling, and other detrimental effects, including over stressing of connections and components.
   d. Provide weep holes or other means to exit entrapped water from hollow sections of gate frame members exposed to exterior condensation, or moisture from other sources.
   e. Coordinate with the Owner's Representative during construction to verify gate receptacle post locations.
2. Finish: polyester texture powder coat with flat finish. Color shall be White.

2.20 VEHICULAR PARK ENTRY SIGN

A. Vehicular Park Entry Sign to conform with Pierce County Parks and Recreation – Sign Standards for Vehicular Scale Park Entry Sign; Appendix D. Sign components include:
1. Sign Panel Face: Double Face
2. Mounting: Surface Mount to Cast-in-Place Footing, Appendix D
3. Lettering
   a. First Line: ORANGEGATE
   b. Second Line: PARK
4. Symbol Squares:
   a. [DOG PARK]
      [PARKING]
   b. [RESTROOM/TOILET]
   c. [PLAYGROUND SYMBOL]
   d. [PICNIC SHELTER SYMBOL]

2.21 PARK INFO & RULES SIGN

A. Park Entry Sign to conform with Pierce County Parks and Recreation – Sign Standards for Pedestrian Scale Park Info & Rules Sign; Appendix D. Sign components include:
   1. Sign Panel Face: Single Face
   2. Mounting: Surface Mount to Cast-in-Place Footing
   3. Lettering per Appendix D.
   4. Informational Panel: Use CHPL-1 Custom High-Pressure Laminate. Artwork template and edits used for fabrication provided by Pierce County Parks and Recreation.

2.22 TRAIL ENTRY – LARGE SIGN

A. Trail Entry - Large Sign to conform with Pierce County Parks and Recreation – Sign Standards for Trail Entry -Large Sign; Appendix D. Sign components include:
   1. Sign Panel Face: Single Face
   2. Footing: Cast-in-place, cement concrete footing, 3000 psi.@ 28 days with reinforcing and dimensions indicated in Appendix D
   3. Mounting: Surface Mount to Cast-in-place Footing(s), Appendix D
   4. Informational Panel: Use CHPL-1 Custom High-Pressure Laminate. Artwork template and edits used for fabrication provided by Pierce County Parks and Recreation.

2.23 TRAIL DIRECTIONAL SIGN

A. Trail Directional Sign to conform with Pierce County Parks and Recreation – Sign Standards for Pedestrian Scale Trail Directional Sign; Appendix D. Sign components include:
   1. Sign Panel Face: Single Face
   2. Mounting: Embedded
   3. Lettering:
      a. Sign for Goblin Ring
         1) First Line: GOBLIN RING
      b. Sign at Pipeline Trail
         1) First Line: TRAIL TO
         2) Second Line: ORANGEGATE PARK
   4. Informational Panel: Use CHPL-1 Custom High-Pressure Laminate. Artwork template and edits used for fabrication provided by Pierce County Parks and Recreation.

2.24 AMENITY INFO & RULES SIGN – PLAYGROUND RULES

A. Amenity Info & Rules Sign – Playground Rules to conform with Pierce County Parks and Recreation – Sign Standards for Pedestrian Scale Amenity Info & Rules Sign – Playground Rules; Appendix D. Sign components include:
   1. Sign Panel Face: Single Face
   2. Footing: Cast-in-place cement concrete footing, 3000 psi @ 28 days, with reinforcing and dimensions indicated in Appendix D
   3. Mounting: Surface Mount to Cast-in-place Footing –Appendix D
   4. Informational Panel: Use CHPL-1 Custom High-Pressure Laminate. Artwork template and edits used for fabrication provided by Pierce County Parks and Recreation.

2.25 PLAYGROUND WELCOME SIGN

A. Playground Welcome Sign to conform with Pierce County Parks and Recreation – Sign Standards for Pedestrian Scale Playground Welcome Sign - Welcome! Ages 2-12; Appendix D. Sign components include:

1. Sign Panel Face: Single Face
2. Footing: Cast-in-place cement concrete footing, 3000 psi @ 28 days, with reinforcing and dimensions indicated in Appendix D
3. Mounting: Surface Mount to Cast-in-place Footing –Appendix D
4. Informational Panel: Use CHPL-1 Custom High-Pressure Laminate. Artwork template and edits used for fabrication provided by Pierce County Parks and Recreation.

2.26 AMENITY INFO & RULES SIGN – OFF LEASH AREA RULES

A. Amenity Info & Rules Sign – Off Leash Area Rules to conform with Pierce County Parks and Recreation – Sign Standards for Amenity Info & Rules Sign – Off Leash Area Rules Fence Mount. Sign components include:
   1. Face: Single Face
   2. Mounting: Mount to fence
   3. Informational Panel: Use MTL1 (1/8" thick aluminum panel) & GFM1 (Graphic film). Graphic file and text provided by Pierce County Parks and Recreation.

2.27 AMENITY INFO & RULES SIGN – PARK SHELTER RULES

A. Amenity Info & Rules Sign – Park Shelter Rules to conform with Pierce County Parks and Recreation – Sign Standards for Amenity Info & Rules Sign – Park Shelter Rules Panel mounted on Park Shelter Column. Sign components include:
   1. Face: Single Face
   2. Mounting: Secure to shelter column in location determined by Owner. Mount to each column with ¼ in. diameter, galvanized machine bolts two (2) per post, with washers and hex nut. Maximum ¼ in. thread exposed past nut. Note: Do not obscure any part of the sign messaging when installing the mounting bolts.
   3. Lettering:
      a. Shelter Name (Sign 1): SHELTER 1
      b. Shelter Name (Sign 2): SHELTER 2 (for bid add shelter)
      c. Secondary text (Sign 1-2): Text file and layout example provided by Pierce County Parks and Recreation.
      d. QR Code Graphic: Graphic file provided by Pierce County Parks and Recreation.

2.28 GENERAL SIGN – PEDESTRIAN SCALE

A. General Sign-Pedestrian Scale to conform with Pierce County Parks and Recreation – Sign Standards for General Sign-Pedestrian Scale; Appendix D. Sign components include:
   1. Sign Panel Face: Single Face
   2. Footing: Cast-in-place cement concrete footing, 3000 psi @ 28 days, with reinforcing and dimensions indicated in Appendix D
   3. Mounting: Surface Mount to Cast-in-place Footing –Appendix D
   4. Informational Panel: Use CHPL-1 Custom High-Pressure Laminate. Artwork template and edits used for fabrication provided by Pierce County Parks and Recreation.

2.29 LOW PROFILE INFORMATIONAL SIGN

A. Low Profile Informational Sign to conform with Pierce County Parks and Recreation – Sign Standards for Low Profile Informational Sign; Appendix D. Sign components include:
   1. Sign Panel Face: Single Face
   2. Footing: Cast-in-place cement concrete footing, 3000 psi @ 28 days, with reinforcing and dimensions indicated in Appendix D
   3. Mounting: Surface Mount to Cast-in-place Footing –Appendix D

4. Informational Panel: Use CHPL-1 Custom High-Pressure Laminate. Artwork template and edits used for fabrication provided by Pierce County Parks and Recreation.

2.30 BOARDWALK

A. Boardwalk components include:
   1. Ledger Board: 2x8 pressure treated wood.
   2. Joist: 2x6 12-gauge, galvanized steel rectangular tube; compliant with ASTM A653.
   3. Beam: 4x6 1/4” galvanized steel rectangular tube; compliant with ASTM A500.
   4. Rigid Connector Angle: Rigid Connector Angle RCA-C223/97 manufactured by Simpson; (800) 999-5099; www.strongtie.com.
   5. Steel Joist hanger bracket must be HU Heavy Face-Mount Joist Hanger manufactured by Simpson; (800) 999-5099; www.strongtie.com.
   6. Bullrail and spacer: Trex Transcend 2x4 Square Edge Board manufactured by Trex; 2500 Trex Way, Winchester, VA 22601 USA; 1-800-289-8739; www.trex.com.
      a. Color: Tiki Torch
   7. Planking: Trex Transcend 1x6 Square Edge Board manufactured by Trex; 2500 Trex Way, Winchester, VA 22601 USA; 1-800-289-8739; www.trex.com.
      a. Color: Tiki Torch
   8. Fasteners and fittings per contract drawings.
B. Or approved equal.

2.31 KNOXBOX

A. Knoxbox to be KnoxBox® 3200, surface mount, black, mechanical Lock model #3261 manufactured by KNOX Company; 1601 W. Deer Valley Road, Phoenix, AZ 85027; 800-566-9269; www.knoxbox.com
   1. Galvanized steel post, fasteners, and footing per Contract Drawings.

PART 3 EXECUTION

3.01 GENERAL

A. Verify installation conditions as satisfactory to receive work of this Section. Do not install until unsatisfactory conditions are corrected. Beginning work constitutes acceptance of conditions as satisfactory.
B. Mark alignment, orientation, and locations of all site furnishings for review by Owner’s Representative prior to installation. Incorrectly located work must be removed and/or replaced by the Contractor at no additional cost to the Owner.
C. Install site furnishings items rigid, plumb and true to lines and levels shown in contract drawings.
D. Assemble (if required) and install all equipment specified by name and/or manufacturer as per approved manufacturer’s written instructions and/or recommendations.

3.02 SUBGRADE PREPARATION

A. The Contractor must verify that subgrade has been properly compacted and compaction tests, if required, have been accomplished.

3.03 CRUSHED SURFACING TOP COURSE

A. Provide thickness as shown on the Contract Drawings.

3.04 CAST-IN-PLACE CONCRETE

A. Layout and size concrete pads, footings, and foundations per manufacturer's written instructions or as shown in the Contract Drawings.
B. Cast-In-Place Concrete for site furnishings footings and foundations must be per Section 03 31 00 of these Contract Specifications.
C. Unless otherwise indicated, exposed concrete must have a medium broom finish.

3.05 DIRECT BURIAL INSTALLATIONS

A. All below-grade steel components scheduled for direct burial installation must be coated in an approved manner prior to installation, typically either factory powder coating or hot-dipped galvanized.
B. Provide footing excavations sized as shown in the Contract Drawings and per manufacturer's written installation instructions.
C. All site furnishings scheduled for direct burial installation within new paved areas are to be installed prior to paving.
    1. Do not core completed work of the Contract to accomplish product installation without prior approval of the Owner's Representative.
    2. Where the Owner's Representative has approved coring of pavement installed as part of the work of the Contract, the Contractor must ensure an adequate supply of clean water and continuously flush and clean cuttings from pavement surfaces to remain.
D. Concrete footings not within new paving areas must be neatly and evenly crowned slightly above adjacent finish grade where adjacent finish grade is generally level, or matching adjacent finished grade where adjacent finish grade is sloped.

3.06 SURFACE INSTALLATIONS

A. Surface installations must be made only upon approved concrete surfaces.
B. Use only manufacturer approved anchoring devices unless otherwise shown in the Contract Drawings and Contract Specifications.
C. Shim as required to level; with aluminum or galvanized steel shims or equal as approved by Owner's Representative.
D. Where the manufacturer does not provide a specification for anchoring, use only approved stainless steel wedge anchors as follows:
    1. Do not proceed with anchor installation until concrete pavement has had a minimum of 14 days cure time under normal conditions. Where weather conditions are beyond the range of normal, do not proceed with anchor installation without the approval of the Engineer.
    2. Size to the largest standard diameter that the manufacturer's pre-made hole will accommodate without force.
    3. Size for embedment of ¾ of the actual depth of concrete to support the installation, in no case less than 2½". Allow for depth of washer and vandal resistant cap nut.
    4. Do not over drill beyond 1/8" the depth necessary to accommodate the anchor.
    5. Torque to 80-85% of the anchor manufacturers recommended maximum.
    6. Provide at least one anchor for every bolt location hole for any site furnishing.

3.07 INSTALLATION OF MANUFACTURED ITEMS

A. Install all equipment in accordance with Specifications, Drawings and manufacturer's directions. Where these may be in conflict, the more stringent requirements govern.

3.08 INSTALLATION OF FABRICATED ITEMS

A. All fabricated items shall be installed consistent with the measured plans provided in the Contract Drawings and/or Shop Drawings as applicable, utilizing materials as shown on plans and details.

3.09 CLEAN-UP

A. Clean site furnishings promptly after installation. Remove all residues, stains, scuffs, abrasions, and marks from the finished product in accordance with the manufacturer's instructions. Do not use harsh or abrasive cleaning materials or methods that could damage the finishes.
B. Touch-up and repair minor damages to the finish in accordance with manufacturer's instructions and as approved by the Owner's Representative.
C. Remove and replace damaged components that cannot be successfully repaired as determined by the Owner's Representative.
D. Remove all metal, wood, and concrete slurry and debris, protective wrappings and coverings, and shipping materials from the project site.
E. Fully restore all areas of the site that were impacted by the installation activities.

3.10 SUBSTANTIAL AND PHYSICAL COMPLETION

A. Inspection to determine Substantial and Physical Completion of site furnishings will be made by the Owner's Representative upon the Contractor's request.

END OF SECTION

SECTION 32 84 00
IRRIGATION

PART 1 GENERAL

1.01 GENERAL

A. Furnish and install an automatically-controlled, underground irrigation system and associated equipment, labor, and materials as indicated.
B. This Section also includes the Guarantee of the irrigation system during the planting Guarantee Period of one (1) year duration to ensure the health and establishment of plant materials. Refer to Section 32 90 00 Planting.
C. This Section includes the maintenance of the irrigation system during the one (1) year Maintenance Period.

1.02 SCOPE OF WORK

A. Furnish and install a complete underground sprinkler irrigation system to provide efficient and even irrigation with head-to-head coverage of all planting areas shown on the Contract Drawings. Irrigation system shall have minimum overspray onto signs, paved or non-planted areas and no overspray onto buildings and as specified in the Specifications and be complete and ready for operation.
B. The work included in this Specification (whether mentioned or not) shall consist of all tools, materials, tests, permits and other related items necessary for the installation and operation of the irrigation system. Included shall be all labor necessary for installation, including trenching, plumbing, back-filling, electrical wiring, adjustments, and all other items of labor necessary for a satisfactory operating system.
C. Locate piping in planting areas unless shown in sleeves between planting areas. Avoid conflicts with plant materials, lighting fixtures, signs, architectural features, above and below ground utilities, and drainage systems.
D. Any item of labor, material or equipment not specified or shown in detail, but incidental to or necessary for the complete installation and proper operation of the system, shall be furnished by the Contractor without additional cost to the Owner.
E. All sleeving required for the execution of the work is to be provided as specified. Coordinate locations and installation of pipe sleeving with the general contractor prior to paving operations.

1.03 QUALITY ASSURANCE

A. Contractor must be a bonded irrigation contractor. The sprinkler irrigation system must be installed by an experienced irrigation mechanic, Certified Irrigation Technician, or Journeyman Plumber.
B. All electrical service connection work must be completed by a licensed Electrical Contractor with at least 5 years of documented experience in performing irrigation work of comparable size, scope, and quality.
C. All potable water system components shall be installed by a Washington State Licensed Plumber.
D. All testing of the backflow prevention equipment shall be done by a Washington State Certified Backflow Assembly Device Tester.
E. Site Reviews will be made by the Owner Representative.
    1. Request Owner Representative reviews at least 3 working days in advance of the time review is required.
    2. Reviews of the following critical path items are required:

a. To observe all testing as outlined in these Specifications.
b. Trenching and irrigation pipe layout prior to backfilling.
c. Head layout and coverage.
d. For Substantial Completion of all work (development of physical punch list items).
e. For Physical Completion of all work (physical punch list items satisfactorily completed).
f. Guarantee Period: quarterly site reviews up to Final Acceptance.
g. For Final Acceptance at completion of Guarantee Period.

1.04 VERIFICATION

A. Before proceeding with any work, inspect the site, carefully check all grades and verify all dimensions and conditions affecting the work in order to proceed safely. Changes or alterations to the system to meet actual conditions shall be made at no additional cost to the Owner.
B. Report to the Owner’s Representative all deviation and/or conflicts between Drawings, Specifications and site conditions. Extra work arising from failure to do so shall be completed at the Contractor's expense.
C. Prior to the start of any work, verify available static water pressure (PSI) and gallons per minute (GPM) at point-of-connection to water service. Submit written verification of available PSI to Owner’s Representative prior to beginning work. Any replacement, relocation or additional materials required as a failure to check (PSI) shall be completed at the Contractor’s expense.

1.05 CHANGE ORDERS AND SUBSTITUTIONS

A. Do no work for extra compensation without prior written approval of the Owner in the form of a Change Order.
B. The intent of the Contract Drawings and Specifications is to provide a totally integrated irrigation system. Substitutions will be accepted only if they are proven to be wholly compatible with this system. If standardization of products is requested by the Owner, no substitutions will be permitted.

1.06 PERMITS, CODES AND REGULATIONS

A. Apply for and pay for all necessary permits and fees as required by Local Authority and prevailing ordinances and/or codes.
B. Keep fully informed and shall comply with all existing laws, codes, ordinances, and regulations which in any way affect the conduct of the work.

1.07 INTERPRETATION OF THE CONTRACT DRAWINGS

A. Irrigation Drawings are diagrammatic and are not intended to show exact location of such items as piping, valves, controllers, and other equipment. Locate these items as per related details to edges of paving. Locate such items as piping, valves, controllers and other equipment inside property line unless otherwise noted on the Contract Drawings.
B. Pipe lines shown parallel on the Contract Drawings may be placed in a common trench. Sprinkler heads are shown accurately and shall be installed as indicated by center of symbol.
C. Trenching that may potentially disturb root systems of existing trees is to be brought to the attention of the Owner’s Representative before proceeding.

1.08 PROTECTION OF WORK, PROPERTY AND PERSONS

A. Take all necessary precautions to protect work in progress, all property, persons, utilities, walks, curbs, pavement and buildings from any damage that might be incurred arising from this

Contract. Repair to the satisfaction of the Owner, at Contractor's expense, any damage to the above and existing landscape.

1.09 CONDUCT OF WORK

A. Continuously maintain a competent superintendent or foreman during progress of the work, with the authority to act in all matters pertaining to the work. The Contractor shall give personal attention to the fulfillment of the contact and shall keep the work under control.
B. Confine operations to the working areas allotted by the Owner, including material and equipment storage.
C. Progressively clean the work site of debris and rubbish as the work proceeds. Keep sidewalks and site clean, free from debris and affected drains open and free flowing at all times.
D. Locate and identify all underground utilities (on or near Public Rights-of-Way / Property Lines) prior to digging and/or driving stakes.
E. Repair to the satisfaction of the Owner any damage to existing utilities. Existing known utilities have been shown on the Architectural/Engineering and/or Survey Drawings and will be made available from the Owner and/or Utility Companies. It will be the Contractor's responsibility to verify utility locations on the ground with a pipe-finder or by other means. Contact Utility Locate at 1-800-424-5555 in advance of any digging to have existing utilities located and marked on-site. The Contractor shall be responsible for the protection of existing known utilities. Should the ditching intercept and damage any existing utilities, all further work within said area shall stop until the Owner is advised and the Owner can review a repair method and schedule.
F. Provide barricades and safety guards, and any other structures or improvements necessary for the complete protection of the public.
G. The Contractor shall bear sole responsibility for damage to and/or water leaks on the Owner’s property and any property located outside of the project site, which is caused by the Contractor’s negligence during construction of the project. The Contractor shall also bear sole responsibility for any pollution of rivers, streams, groundwater or other waters that may occur as a result of construction operations. The Contractor shall replace, repair and pay for all damages caused by his/her negligence to the satisfaction of the Owner prior to final payment.

1.10 SYSTEM PROTECTION

A. As a part of the guarantee under this contract, the Contractor shall be responsible for the deactivating and draining of the system prior to the onset of the freezing season and for reactivating the system at the onset of the spring growing season; each task must be accomplished once during the one (1) year Guarantee Period.
B. In the event the system is completed in a season when the system will not be in use, the Contractor will winterize the system upon acceptance and will reactivate the system in the spring. The Contractor shall, upon completion of the winterizing phase, submit a letter to the Owner and the Owner’s Representative certifying that the system was winterized and drained, and indicates the date when such action was accomplished. The Contractor shall be liable for any damage resulting from failure to comply. The Contractor shall notify both the Owner and the Owner’s Representative 48 hours prior to the work so that the Owner’s Representative can be present during the winterizing and reactivating phases of work.

1.11 GUARANTEE

A. Guarantee the irrigation system for all workmanship and material for a period of one (1) year, coinciding with planting Guarantee Period. Repair and/or replace defective irrigation equipment as determined by the Owner for the duration of the guarantee period. Repairs and/or

replacements shall be made in the same manner as specified for the original irrigation system and shall be completed at no cost to the Owner.

B. Should any trouble develop within one (1) year which, in the opinion of the Owner, is due to inferior or faulty material and/or workmanship, the trouble shall be corrected, without delay, to the satisfaction of the Owner and at the Contractor's expense.

C. Any settling of backfilled trenches shall be repaired by the Contractor at the Contractor's expense, including but not limited to, restoration of pavement, seeded areas, and/or planted areas.

1.12 MAINTENANCE

A. It is expressly understood the ~~Contractor~~ Owner will be responsible during the one (1) year Guarantee Period for normal maintenance of the project, as defined in the Contractor's Operation and Maintenance Manual and Watering Schedule Submittals. Irrigation Maintenance shall coincide with the one (1) year Guarantee Period. After the completion of the one (1) year Guarantee Period, the Owner will be responsible for the maintenance of the irrigation system.

1.13 TESTS

A. Pre-test for Pressure Test and Coverage Test prior to the Owner's Representative's review of said tests to confirm that the irrigation system will meet the requirements of the specified tests.

B. Once pre-tests are completed and acceptable results are confirmed by the Contractor, tests shall be witnessed by the Owner's Representative. The Contractor shall give at least 48 hours advance notice of tests.

C. Should additional test reviews be required due to conditions found to be the Contractors responsibility, reimburse the Owner for billed costs for the participation of the Owner's Representative in repeated test reviews. Billed costs may include time, telephone, travel expenses, and per diem allowances for meals and lodging incurred as a direct consequence of the additional activities.

1.14 SUBMITTALS

A. Irrigation Material Documentation
   1. Submit 4 sets of samples and/or manufacturer's "Catalog Cuts" of all material as noted in Specifications. Failure to do so may result in non-acceptance of materials already used or hauled to the site. Any removal or delays incurred will be at the expense of the Contractor. All samples submitted for approval must be unaltered and of quantity sufficient to allow for proper inspection and review.

B. Manufacturer's Instruction / Maintenance / Operation Information:
   1. The Contractor shall provide 2 sets of the following, in three-ring binders with sections indexed and tabbed.
      a. List of authorized distributers and service representatives for each item of equipment used, including names, addresses and phone numbers.
      b. Instruction manuals for all equipment installed.
      c. Parts list with specifications numbers for each item installed.
      d. Winterization and start up procedures.
      e. Controller wire color code chart.
   2. Controller Charts:
      a. The Chart shall be a bond copy print with a different pastel transparent color to show each separate zone. Verify that the zone number as shown on the Controller Chart matches the number on the actual control valve identification tag.

b. Provide one controller chart per controller. Controller chart shall fit in behind controller door.
c. When completed and approved, hermetically seal (laminate) the chart between two pieces of plastic.
d. The charts shall be completed before the project can obtain Physical Completion.

C. Watering Schedule Submittal: Contractor shall cooperate with Landscape Contractor in providing Owner with a written "watering schedule" to ensure adequate watering of all plant materials during the Warranty Period of this Contract.
D. As-Built Drawings: See As-Built Drawing Section herein.
E. Backflow Preventer Assembly inspection and test results.
F. Written documentation of the date the irrigation system was winterized.
G. Written documentation of existing static water pressure (PSI) and flow (GPM).
H. Spare Parts
1. The Contractor shall provide to the Owners Representative the following items as spare parts at no additional cost.
a. 2 sets of Controller cabinet keys.
b. 2 of each type and size of head and nozzle used on this project.
c. 2 lid keys per valve box
d. 2 valve keys per valve box

1.15 AS-BUILT DRAWINGS

A. The Contractor shall be responsible for maintaining a current and accurate record of all equipment installed and record any deviations to the plans (all deviations to the plans shall be approved by the Owners Representative). As-Built records shall be updated daily on site and shall be available for review by Owners Representative at any time. All mainline, sleeves, automatic control valves, manual gate valves, electrical splice boxes, controllers, shall be dimensioned on As-Built drawings to two permanent monuments. Upon completion of the system and prior to acceptance, the Contractor shall provide the Owner's Representative with a neat and clean reproducible hard copy set of As-Built drawings. The contractor shall also provide the As-Built drawings as a scanned PDF. Coordinates shall be based upon Washington State grid.
B. After acceptance of the As-Built drawings, the Contractor shall place a reduced, non-fading, laminated copy inside the controller cabinet door.

1.16 PIPE SLEEVES

A. Provide and install pipe sleeves as shown on the Contract Drawings and as specified in these Specifications. Coordinate location and installation of pipe sleeves with general contractor prior to paving operations.

PART 2 PRODUCTS

2.01 GENERAL

A. All materials and equipment shall be new and of the best quality. All items of equipment or material shall be as specified or approved equal.

2.02 PLASTIC PIPE AND FITTINGS

A. PVC pipe upstream and downstream of the control valves shall be Schedule 40 complying with ASTM D1785.

B. PVC pipe downstream of the control valves Class 200 (pressure rated for 200 psi), and conform to all requirements of ASTM D2241, SDR21.
C. PVC pipe sleeving: Schedule 80 and conform to all requirements of ASTM D2464.
D. All glued and threaded fittings for lateral lines shall conform to the requirements of ASTM D2466 Schedule 40 PVC. All fittings shall be of the solvent weld type except where risers, valves, etc. require threaded transition fittings.
E. All threaded fittings for mainlines shall conform to requirements of ASTM D2464 Schedule 80 PVC. All glued fittings for mainline shall conform to requirements of ASTM D2466.
F. All pipe shall be marked with manufacturer's name, class of pipe and NSF seal. Pipe shall bear no evidence of interior or exterior extrusion marks. Pipe walls shall be uniform, smooth and glossy. Pipe may be pre-belled or with individual solvent-weld couplings.
G. All threaded fittings for mainlines shall conform to requirements of ASTM D2464 Schedule 80 PVC. All glued fittings for mainlines shall conform to the requirements of ASTM D2466, Schedule 40 PVC.
H. PVC Threaded Nipples: Schedule 80, complying with ASTM D1785.
I. All pipe must be delivered in at least 20-foot lengths.
J. All PVC pipe and fittings shall conform to the following minimums:

1.	Tensile strength 78F	5,000 psi
2.	Izod impact strength (notched)	0.65 ft. lb./in.
3.	Modulus of elasticity	300,000 psi
4.	Compressive strength	8,500 psi
5.	Flexural strength	10,000 psi

2.03 PVC PIPE JOINT COMPOUND AND PRIMER

A. Joint compound: Slow drying, heavy-duty PVC solvent cement type.
B. Primer: Tinted, compatible with joint compound; color: purple.

2.04 AUTOMATIC CONTROLLER

A. Shall be of the type, manufacturer and size shown on the Contract Drawings or approved equal.

2.05 QUICK COUPLER VALVES

A. Shall be of the type, manufacturer and size shown on the Contract Drawings or approved equal.

2.06 ROOT WATERING SYSTEM

A. Shall be of the type, manufacturer and size shown on the Contract Drawings or approved equal.

2.07 POP-UP SPRAY HEADS

A. Shall be of the type, manufacturer and size shown on the Contract Drawings or approved equal.

2.08 AUTOMATIC CONTROL VALVES

A. Shall be of the type, manufacturer and size shown on the Contract Drawings or approved equal.

2.09 CONTROL WIRE FOR AUTOMATIC CONTROL VALVE OPERATIONS

A. Control wire must be insulated single strand copper designed for 24 to 50 volts and UL approved as Type U.F. (Underground Feeder). UL and U.F. designations must be clearly marked on insulation jacket of wire.
B. Copper conductor must meet or exceed ASTM B-3 requirements.

C. Minimum wire size shall be No. 14 AWG. Size wire to control valve per valve manufacturer's recommendations.
D. Red color shall be available for lead (hot) wires.
E. White color shall be available for common ground wires.
F. Yellow color shall be provided for spare wires.
G. Wire Splice Connections: 3M, DBY, Rainbird Penn-Tite, Scotchlok or approved equal.

2.10 MANUAL GATE VALVES

A. Shall be of the type, manufacturer and size shown on the Contract Drawings or approved equal.

2.11 MANUAL DRAIN VALVE

A. Shall be of the type, manufacturer and size shown on the Contract Drawings or approved equal. AUTOMATIC DRAIN VALVES WILL NOT BE ACCEPTED.

2.12 VALVE BOXES

A. Unless otherwise specified, all automatic valves and manual gate valves shall be enclosed in Carson Industries with locking lid or approved equal.
B. Manual drain valves shall be enclosed in a Carson industries 910-128, 10-inch round box with green bolt down cover or approved equal.
C. Backflow preventers shall be enclosed in a Carson Industries Number 1730 PB-18 Body Box or approved equal.
D. Provide two lid keys and two valve keys per Valve Box type to the Owner.
E. Size valve boxes as required to provide approximately 3 inches clear between valve box and valve on all sides. Provide and install valve box extensions as required.

2.13 BACKFLOW PREVENTER

A. Shall be of the type, manufacturer and size shown on the Contract Drawings or approved equal. All backflow preventers must be inspected and approved by the controlling agency before final acceptance.

2.14 IRRIGATION WATER METER

A. Water Meter shall be of the type and manufacturer as required by local authority and prevailing ordinances and/or codes.
B. For size, see Civil drawings.

2.15 BACKFILL MATERIALS

A. Gravel Backfill (for use under valve boxes only):
   1. Three-quarter minus round, water worn, washed gravel.
B. Sand (backfill soils around PVC pipe):
   1. Fine granular material naturally produced by rock disintegration and free from organic material, loam, clay and other deleterious substances.
C. Native Material (backfill soil around PVC pipe):
   1. Soil native to project site free of wood and other deleterious materials and rocks over 1-inch diameter.

2.16 POLYETHYLENE SWING RISER

A. All polyethylene swing risers shall be "Hunter SJ Swing Joint" or approved equal.

2.17 OTHER SUPPLIES

A. Electrical tape shall be black plastic, three-quarters (3/4) inch wide and a minimum of 0.007 inches thick and the all-weather type.
B. All electrical wire splices must be made watertight with sealing 3M Direct Burial Splice Kit or approved equal.
C. Thrust blocking shall be on 3-inch and larger mainline only.

PART 3 EXECUTION

3.01 EXISTING SYSTEM PROTECTION

A. Protect and maintain existing irrigation system during the entire construction period. All interruptions to existing irrigation water service must be approved by Owner prior to periodic shutdowns. Repair and/or replace any damage to existing system. All new pipe and fittings are subject to hydrostatic testing per specifications.

3.02 TRENCHING

A. Trenches shall allow for 12 inches of cover over lateral lines, 18 inches of cover for irrigation main lines and 24 inches of cover for main supply line from point-of-connection to backflow preventer unless otherwise noted on the Contract Drawings. Maintain a minimum clearance of 3 inches between irrigation lines within a common trench. Trenches for sleeves shall allow for a minimum of 18 inches of cover unless otherwise noted on the Contract Drawings. Excavate no wider at any point than is necessary to lay pipe or install equipment. Excavate with vertical sides and provide bracing and shoring as required.
B. All trenches must be straight and not have abrupt changes in grade. Trenching that may potentially disturb root systems of existing trees shall be brought to the attention of the Owner's Representative before proceeding with work.
C. The trench bottoms and bedding material surrounding all pipes must be free of rocks greater than one inch in diameter and all sharp-edged objects. Bed and surround all pipe with Backfill Material as specified in these Specifications.
D. Pulling of pipe is not permitted unless otherwise reviewed by Owner's Representative and approved by the Owner.

3.03 INSTALLATION

A. PVC Pipe and Fittings (Includes Pipe Sleeves):
    1. Due to the nature of PVC pipe and fittings, the Contractor shall exercise care in handling, loading, unloading and storing to avoid damage. Any pipe that has been dented or damaged shall be discarded until such damage has been cut out and the pipe is rejoined with a coupling.
    2. PVC pipe ends shall be cut to 90 degrees to the pipe length and cleaned of all cutting burrs prior to cementing. Use approved reaming tool. Pipe ends shall be wiped clean with a rag lightly wetted with PVC thinner. Cement shall be applied with a light coat on the inside of the fitting and a heavier coat on the outside of the pipe. Pipe shall be inserted into the fitting and given a quarter turn to seat the cement. Excessive use of cement is not permitted. Pipe will be tested as indicated elsewhere in these specifications. No backfilling will be permitted other than at the centers of pipe lengths until the pressure test is completed.
    3. Backfilling shall be completed when pipe is not in an expanded condition due to heat or pressure. Cooling of the pipe can be accomplished by operating the system for a short time before backfill or by backfilling in the early part of the morning before the heat of the day.

4. No PVC pipe may be threaded or connected to a threaded fitting without an adapter.
5. Great care must be taken to ensure that the inside of the pipe is absolutely clean. Any pipe ends not being worked on must be protected and not left open.
6. All threaded joints shall have Teflon tape installed per manufacturer recommendations.

B. Head Locations
1. Heads immediately adjacent to walks, curbs, pavement, unit pavers, shrub/groundcover planting bed edge, etc. shall have 1-inch clearance between head and walks, curbs, pavement, unit pavers, shrub/groundcover planting bed edge etc. unless otherwise noted on the Contract Drawings. Sprinkler heads located adjacent to parking area curbs shall be located on-center with parking stall striping unless otherwise shown on the Contract Drawings.
2. Remove and dispose of off-site pavement (that portion of pavement for head and pipe only) adjacent to curbs to allow one (1) inch clearance per the above.

C. Control Wire
1. Control wires are to be taped together at 5-foot intervals; then this bundle is to be taped to the bottom of the supply line at 10 foot intervals with at least 3 wraps of electrical tape.
2. All wire splices must be made watertight with sealing 3M Direct Burial Splice Kit and contained in valve boxes.
3. Splices will be permitted only at the valves and never between valves or valve and controller unless in a separate valve box. There must be a separate lead (hot) wire to each automatic valve. One ground wire will be acceptable.
4. Minimum size of wire is to be determined strictly by the wire sizing chart provided by control valve manufacturer.
5. The control wires shall be color coded as follows:
   a. Ground Wire – White
   b. Lead (Hot) Wire – Red
   c. Spare Wire – Yellow.
6. Arrange valve stations to operate in sequence shown on “As-Built” Drawings.
7. One or more spare wire(s) shall be provided to all control valves. The spare wire(s) shall be shared by all the valves and shall complete the circuit back to the controller. Wire sizes shall be the same as the sizing chart provided by the control valve manufacturer.

D. Risers:
1. All sprinklers shall be installed per details shown on Contract Drawings. The pipe risers must have the same inlet size as the sprinkler heads.
2. Minimum riser size shall be the pipe size of the sprinkler head.
3. Risers are to be capped after installation to keep inside of pipe clean.
4. Care must be taken not to over-tighten the threaded pipe into the PVC fittings.

E. Automatic Controller(s):
1. Electrical wiring shall be installed according to local code requirements. The cost of all electrical work necessary to make the automatic equipment operate properly at the electrical service stub-out to the controller(s) shall be included in this contract. Electrical service from an approved source to the controller location(s) shall be provided by the general contractor.
2. Controller location(s) and type of mounting of controller(s) shall be as specified and as shown on the Contract Drawings. Contractor shall coordinate location and installation of the Automatic Controller(s) with the General Contractor prior to installing the irrigation system.
3. The Contractor shall use readable handwriting to post the valve schedule in the controller to facilitate the selection of the valves to be operated.

F. Backflow Preventer:

1. Install in accordance with local plumbing code. See detail shown on the Contract Drawings.
2. Verify location with Owners Representative prior to installation. Install no closer than 18 inches and no more 36 inches from pavement edge.
3. A manual shut-off valve shall be located upstream of Backflow Preventer to allow full isolation of system from water supply.
4. Inspect and test the backflow preventer assembly before use in accordance with applicable portions of the Washington Administrative Code and other applicable regulations as set forth by the Washington State Department of Health and local jurisdiction.
5. These inspections and tests are to be completed and results recorded by a licensed Backflow Assembly Tester. Inspection and test results shall be submitted to Owners Representative prior to operating the irrigation system.
6. Contractor shall be responsible for all testing and testing fees.

G. Manual Drain Valve:
1. Install per detail shown on the Contract Drawings. Drain valves are not required for drainage of the entire irrigation system unless otherwise noted on the Contract Drawings.

H. Automatic Control Valves:
1. Install per detail shown on the Contract Drawings.
2. Before installation of any automatic valves, the supply line must be thoroughly flushed.
3. All automatic valves shall be enclosed in valve boxes set above finish grade as shown on details. Valve box extension may be required. Locate valve boxes in shrub and groundcover planting beds wherever possible and at points of easy access from paved and/or lawn areas.
4. Locate outside of paved areas and grouped together where possible. Where valves occur adjacent to paved areas, install valves so that valve boxes will not be closer than 12 inches to paving unit pavers. Valve boxes shall be perpendicular or parallel to pavement and grouped to provide a neat appearance.

I. Manual Gate Valve
1. Install per detail shown on the Contract Drawings.

J. Quick Coupling Valve
1. Install per detail shown on the Contract Drawings.

K. Root Watering System
1. Install per detail shown on the Contract Drawings.

L. Backflow Preventer Assembly
1. Install per detail shown on the Contract Drawings.

M. Irrigation Water Meter(s):
1. Install irrigation water meter per prevailing ordinances and/or code requirements. The cost of all work necessary to make the irrigation system operate properly from the Point-of-Connection (downside of water meter) shall be included in this contract. Water service from an approved source to the point-of-connection shall be provided by the General Contractor. The approved water meter shall also be provided by the General Contractor.
2. Locate water meter as shown on the Contract Drawings.
3. See Civil Drawings.

N. Pipe Sleeves:
1. All sleeves shall extend a minimum of 12 inches beyond the edges of pavement.
2. Pipe for irrigation mains and laterals may be installed with sleeves but shall not include any pipes with couplers whenever possible.
3. Plug all ends of sleeves and irrigation mains and laterals to prevent soil from entering.

O. Backfilling:

1. In refilling trenches, the bedding around the pipe and fittings shall be approved “Backfill Materials” and shall be well tamped. If necessary, provide suitable imported backfill. Trenches shall be thoroughly compacted and water-settled. Trenches shall be backfilled uniform with the surrounding grade, raked to a slight mound, then rolled with a 250 pound roller, or compact with a vibrator.
2. All roots, rocks and surplus excavation shall be removed from the site unless otherwise directed.
3. Trenches and pipe sleeves under roads or paved areas shall be backfilled and tamped with a mechanical tamper in successive six-inch lifts to at least 95% density as determined by ASTM D1557. Paving shall be replaced to the satisfaction of the Owner.
4. Before backfilling, all underground appurtenances including risers, valves, backflow preventers, drain valves, etc., must remain exposed so that they can be viewed during testing. Leave all joints exposed; then complete backfilling after flushing, pressure testing, inspection and preparation of "As-Built Drawings". The location, inspecting and testing provisions of these specifications will be strictly adhered to. If, for any reason, any part of the sprinkler system is backfilled before approved location, testing, or inspection is authorized by Owner’s Representative, it must be completely uncovered and exposed until approved for backfilling by the Owner’s Representative.

3.04 PRESSURE TESTING

A. For PVC components of irrigation system:
   1. All PVC system joints, connections, couplings, valves, and all other junction points shall be left exposed until completion and acceptance of the pressure test. All leaks, however minor, shall be repaired and corrected.
   2. Before any testing, all piping shall be thoroughly flushed. No automatic control valves shall be connected to the main line prior to testing. All pipe, fittings, gate valves, and automatic control valve stub-outs shall be exposed for inspections during pressure tests. Center load pipe with a small amount of backfill to prevent arching or movement under pressure.
   3. Mainlines shall be purged of air and tested with a minimum static water pressure of 150 psi for 60 minutes without the introduction of additional water service or pumping pressure. The maximum allowable pressure loss shall be 5 psi within 30 minutes. Pressure gauge shall be installed on the mainline at a point approved by Owners Representative.
   4. Lateral lines shall be tested at static water pressure. All swing joints shall be capped. All pipe, fittings and swing joints shall be left exposed for inspection. Prior to inspection lines shall be filled with water and air removed from the line. Inspection of lateral lines will be visually.
B. The Owner’s Representative shall be present during all tests. The total irrigation system shall be pressure tested for acceptance.
C. Rejected systems or portions thereof shall be repaired and re-tested as specified.
D. Contractor shall furnish all equipment, gauges, pumps, materials, and labor for all testing.

3.05 COVERAGE TESTING

A. Before acceptance of the sprinkler system, the Contractor, in the presence of the Owner’s Representative, shall perform an irrigation water "Coverage Test" to determine if the water coverage and operation of the entire irrigation system is complete and satisfactory. If any part of the system is inadequate, it shall be repaired or replaced at the Contractor's expense and the test repeated until accepted. The Contractor must give 48 hours written notice to the Owner’s Representative prior to the field review.

B. The Contractor shall also adjust and balance sprinkler heads for optimum and uniform coverage without excessive fogging or overthrow on to signage, pavement(s), structure(s) and building(s); adjust all sprinkler head heights and set all valve boxes to proper grade prior to final review by Owner's Representative.
C. After coverage test, the Owner's Representative may request up to 5% of total emitters and pressure-compensating screens to be replaced at no additional cost.

3.06 COMPLETE SYSTEM FUNCTIONALITY TEST (PUNCH LIST)

A. Upon approved completion of the Coverage Test, trenching and installation of all equipment, the Contractor shall request a Complete System Functionality Test of the entire irrigation system including: backfilling, irrigation heads, valves, valve boxes, controller and all other equipment.
B. From this inspection, a punch list shall be prepared by the Owner's Representative and presented to the Contractor for completion. The Owner's Representative shall give a date for completion of the punch list, not to exceed 10 working days.

3.07 CLEAN-UP

A. Clean and remove all debris from work areas including paving or unit pavers, curbs, catch basins, manholes and planting areas, etc. caused by the Contractor's work on this project prior to watering. All hard surface areas shall be washed clean. Daily clean up shall be required on all areas used for circulation, parking, or other daily use.

3.08 SYSTEM FAMILIARIZATION

1. Upon acceptance of the system by the Owner, the Contractor shall provide the Owner necessary keys and/or other tools necessary to operate/drain/activate the system and spend sufficient time with the Owner to ensure that the system operation/maintenance/winterizing can continue after the departure of the Contractor. The Contractor will be liable for all damages or losses resulting from failure to comply with the provisions of this paragraph.
2. The Contractor shall cooperate with Landscape Contractor in providing the Owner with a written "watering schedule" to ensure adequate watering of all plant materials during the Guarantee Period of this Contract.

END OF SECTION

SECTION 32 90 00
PLANTING

PART 1 GENERAL

1.01 SUMMARY

A. Install planting, brush piles, habitat logs, and barrier logs using the materials as shown in the Contract Drawings and/or as specified in the Specifications.
B. Work includes all areas within the limits of clearing and grading; and landscape areas outside of the limits which are disturbed in the course of construction activities. Confine operations to the working areas allotted by the Owner for operations, including material and equipment storage.
C. Restore landscape areas impacted by construction to preconstruction or improved condition.

1.02 SCOPE OF WORK

A. Furnish all materials, equipment, labor and related items necessary to complete the work shown in the Contract Drawings and/or as specified in the Specifications. The work included in this section (whether mentioned or not) consists of all labor, tools, materials, tests, permits and other related items necessary for the provision and installation of all plant materials in a first quality workmanlike manner.
B. Coordinate the layout and installation of plant materials with the installation of the irrigation system to ensure complete and full irrigation coverage of the planted areas.
C. This section includes a Guarantee Period of one (1) year duration from Substantial Completion to ensure the health and establishment of plant materials.

1.03 REFERENCES

A. This specification section incorporates by reference the latest revisions or editions of the following documents.
   1. American Nursery & Landscape Association/American National Standards Institute (ANSI): Z60.1, American Standard for Nursery Stock (ASNS).
   2. International Society of Arboriculture Best Management Practice Series.
   3. Tree Care Industry Association (TCIA): Standards for Tree Care Operations ANSI A300.
   4. Washington State Department of Transportation (WSDOT) Standard Specification for Road, Bridge and Municipal Construction.
B. In case of conflict between the requirements of this specification section and the Contract Drawings, the requirements of the contract specification section shall prevail.

1.04 DEFINITIONS

A. Nomenclature for plants and varieties shall be in accordance with the current edition of:
   1. Hortus Third, The Staff of the L. H. Bailey Hortorium. 1976. MacMillan Publishing Co., New York, or
   2. Flora of the Pacific Northwest, Hitchcock and Chronquist, University of Washington Press, 1998, or
   3. PLANTS Database Website, as published and maintained by the United States Department of Agriculture, Natural Resources Conservation Service, (http://plants.usda.gov/).
B. The term "Contractor" as used in this Specification section shall refer to the Landscape Contractor.
C. Trees, shrubs, groundcovers, live stakes, and seedlings will hereinafter be collectively referred to as, “plants” or “plant material.”

1.05 PERMITS, CODES, AND REGULATIONS

A. Obtain and pay for all necessary permits and fees as required by the Local Authority and prevailing ordinances and/or codes.
B. Keep fully informed and comply with all existing laws, codes, ordinances and regulations that in any way affect the conduct of the work as drawn and specified. If the Contractor observes that a conflict exists between permit requirements and the work outlined in the contract documents, the Contractor must promptly notify the Owner's Representative in writing including a description of any necessary changes and changes to the contract price resulting from changes in the work.
C. Wherever references are made to standards or codes in accordance with which work is to be performed or tested, the edition or revision of the standards and codes current on the effective date of this contract must apply, unless otherwise expressly set forth.
D. In case of conflict among any referenced standards or codes or among any referenced standards and codes and the Specifications, the more restrictive standard must apply or Owner's Representative will determine which must govern.

1.06 QUALITY ASSURANCE

A. All work must be performed by a licensed and bonded Contractor registered in the State of Washington and be qualified for landscaping work through certification by the Washington Association of Landscape Professionals (WALP) or by the Washington State Nursery and Landscape Association (WSNLA).
B. Have at least 5 years of documented experience in performing landscape work of comparable size, scope, and quality.
C. Be familiar and comply with "American Standard for Nursery Stock" (ANSI Z60.1) published by the American Nursery & Landscape Association.
D. Maintain a competent superintendent or foreman during the progress of the work, with the authority to act for the Contractor in all matters pertaining to the landscape work. That individual, who must direct the work, must be thoroughly familiar with the types of materials being installed and the proper methods for their installation.
E. Progressively clean the work site of debris and rubbish as the landscape work proceeds.
F. Perform all necessary pruning of trees (existing or new) by an International Society of Arboriculture (ISA) certified arborist who is licensed as an arborist in the State of Washington.
G. Site Reviews will be made by the Owner Representative.
    1. Request Owner Representative reviews at least 3 working days in advance of the time review is required.
    2. Reviews of the following critical path items are required:
        a. Preconstruction meeting prior to start of landscape work.
        b. Finish grading prior to any planting.
        c. Inspection of plant materials before planting.
        d. Layout of plant material.
        e. Tree planting and proper staking.
        f. During Plant Installation and Planting of each Plant Material Type (Tree, Shrub, Groundcover, Live Stake, and Seedling).
        g. For Substantial Completion of all work (development of physical punch list items).
        h. For Physical Completion of all work (physical punch list items satisfactorily completed).
        i. Guarantee Period: quarterly site reviews up to Final Acceptance.
        j. For Final Acceptance at completion of Guarantee Period.

1.07 SUBMITTALS

A. Quality Assurance Documentation:
   1. Submit Landscape Subcontractor's State of Washington registration, and current certification by the Washington Association of Landscape Professionals (WALP) or by the Washington State Nursery and Landscape Association (WSNLA).
   2. Submit documentation of Landscape Subcontractor's experience in performing landscape work of comparable size, scope, and quality over the past five (5) years.

B. Plant Material Documentation:
   1. Within 30 calendar days after award of a Contract, submit written documentation to the Owner's Representative that all specified plant materials have been ordered or procured.
   2. List plant suppliers' names, addresses, and phone numbers and list respective growing or storage locations with addresses.
   3. Submit color photographs from the respective nursery of representative specimens of each species of plant material listed in the Plant Schedule. Photos must be minimum 300 DPI digital *.jpg format, taken from an angle that depicts the typical size and the typical condition of the plant to be furnished.
      a. Show foliage, canopy form, rootball, and trunk conditions.
      b. Include a scale rod or other measuring devise in the photograph.
      c. For species where more than 20 plants are required, include a minimum of three photos that show the average plant, the best quality plant, and the worst quality plant to be provided.
      d. Label each photograph with the plant name, plant size, and name of the growing nursery.
   4. Approval of plant material documentation is not be considered final acceptance of the plant material itself.

C. Watering Schedule: Submit a written "watering schedule" to the Owner's Representative prior to final acceptance of the Landscape that includes water application time and duration to maintain plant materials in a healthy, growing condition during the Guarantee Period of this Contract.

D. Temporary Storage: 10 working days prior to delivery of plant material to the project site, submit proposed on-site temporary storage location, water source, and proposed protection measures during various seasonal conditions.

E. Weed and Pest Control Plan (including Invasive Species Removal Plan).

F. Submit a copy of each pesticide and/or herbicide applicator's license for the specific class of chemical being applied. Also, submit documentation that all chemicals are registered for the proposed use by the Washington Department of Agriculture according to the Washington Control Act (RCW 15.58.050 through 130) and the General Pesticide Rules (WAC 16-228-1400 through 1460).

G. Submit suppliers, source locations (with addresses and phone numbers), and photographs of representative examples for:
   1. Live Stakes.
   2. Seedlings.

H. Submit suppliers and catalogue cutsheets for planting accessories
   1. Root Barrier.
   2. Tree Staking.

I. Substitutions
   1. No substitution of plant material, species, size, grade, or variety, will be permitted unless evidence is submitted in writing to the Owner's Representative that a specified plant cannot be obtained and has been unobtainable since the Award of the Contract.

a. Provide the names and telephone numbers of at least 5 nursery suppliers that the Contractor has contacted.
b. If substitution is permitted, it can be made only with written approval by the Owner's Representative and the nearest variety, size, and grade as approved by the Owner must then be furnished.

2. Should at any time, the procured nursery stock be lost or compromised due to weather or other natural occurrences, notify the Owner's Representative immediately in writing of the need to locate new material.
3. The manufacturers, products, and suppliers are acceptable as specified herein. Substitutions may be allowed if proof of equivalent quality, suitable product specifications, manufacturer's literature, and other detailed information is provided to the Owner's Representative for review and acceptance, unless otherwise specified.

J. Planting Schedule
1. Within 30 calendar days after award of a Contract, submit written documentation to the Owner's Representative showing when trees, shrubs, groundcovers, live stakes, seedings, and other plant materials are anticipated to be procured and also planted.

K. Operations and Maintenance Manual.
1. Provide an Operations and Maintenance Manual documenting the care for all plantings on a monthly schedule for one (1) calendar year.
2. See Specification 01 78 23 "Operation and Maintenance Data" for submitting operation and maintenance manuals.

1.08 PROJECT CONDITIONS

A. Inspect the site before proceeding with any work, carefully check all grades, elevations, service and utility locations, irrigation system components, and verify all dimensions and conditions affecting the work. Immediately request in writing the need for clarification(s) regarding any discrepancies, conflicts, or deviations between the Contract Drawings, Specifications, and site conditions. Work done after discovery, unless authorized by the Owner's Representative in writing, and extra work arising from failure to notify in writing, is at the Contractor's risk and expense.

B. Verify, locate, and protect all known underground and above-ground utilities prior to digging or other earthwork activities. Promptly notify the Owner's Representative of any conflict between proposed work and obstruction(s). Failure to follow this procedure places upon the Contractor the responsibility and expense of making any and all repairs for damage from work therefrom.

C. Underground Obstructions
1. In the event that undisclosed clay soil, boulder, groundwater, cobble rock, concrete, soils contaminated with toxic substances, hardpan, or other underground obstructions are encountered in the subgrade, notify Owner's Representative immediately in writing.
2. Owner's Representative will determine recommended corrective action that may be needed for removal and/or alternative planting where underground obstructions occur.
3. If additional work is required to solve the underground obstruction problem, such as removal of obstruction and replacement with acceptable material, a Change Order may be required prior to commencement of work. Cost shall be determined on a unit price basis and agreed upon by a Change Order prior to commencement of additional subgrade work.

D. Confine work to designated areas. Do not disturb existing vegetation outside project limits and protect all plant materials within project limits not designated to be removed, unless approved by the Owner's Representative prior to construction. Do not permit vehicular traffic or materials storage under or around new or existing trees.

1.09 PROTECTION OF WORK, PROPERTY, AND PERSONS

A. Take all necessary precautions to protect work in progress, all property, persons, walks, curbs, rooftop membranes and structures, utilities, pavement, and buildings from any damage that might be incurred arising from this Contract.
B. Protect all paved surfaces from staining by planting soil and mulch. Do not remove protection until after initial acceptance of all work. Remove excess soil and debris from the site and repair all damage resulting from construction operations.
C. Protect all landscape work from theft and vandalism until Physical Completion of work.
D. Pay for any damage incurred by failure to take precautions.

1.10 MAINTENANCE PRIOR TO PHYSICAL COMPLETION

A. Begin maintenance immediately after each plant is planted. Water, mulch, weed, spray, fertilize, cultivate, rake and remove leaves, and otherwise maintain and protect plants and landscape work on a regular basis (at least weekly) until Physical Completion. Tighten and repair tree ties and stakes as required.
B. Maintain mulch in planting beds at required compacted depths indicated in Contract Drawings.
C. Correct defective work as soon as possible after it becomes apparent, and the weather and the season permit. Reset settled plants to proper grade and position, and remove and replace dead plant material.
D. Prune only with written approval of the Owner's Representative or as indicated on Contract Drawings.

1.11 GUARANTEE PERIOD

A. The Guarantee Period begins when:
   1. All planting is alive, healthy, growing and installed as specified.
   2. The landscape work is deemed Substantially Complete.
B. Guarantee Period shall be 365 calendar days after the Substantial Completion date of the landscape, including irrigation system(s), to ensure healthy, vigorous growth and establishment of plant material and will end with Final Acceptance.
C. Guarantee the work of this specification section against all defects of materials and workmanship, and plant material is established, remains alive, and is in a healthy, vigorous condition.
D. The guarantee is applicable to any growing conditions through which plants of like kind could be expected to survive. However, this would not apply to plant losses due to:
   1. Extreme weather conditions such as wildfires, floods, freezing rain, wind storms (with recorded wind speeds greater than 60 MPH), drought, and winter kill caused by extreme cold (hard freeze where sustained temperatures are below 28°F for more than 24 hours) as determined by the National Weather Service.
E. ~~Site Access: Contractor has the right to enter upon the property for maintenance inspection and curative treatment of any plants and materials needing such during the entire Guarantee Period. Owner is to be notified in advance of any inspection, corrective treatment measures, or curative treatment measures so as to arrange for approved, security clearance (if applicable) and convenient access to the area.~~
F. Plant Replacement during the Guarantee Period
   1. Any plant material that is 25% or more dead or disfigured must be considered dead and must be replaced at no charge. A tree shall be considered dead when the main leader has died back or when 25% of the canopy is dead.
   2. All plants are subject to one (1) replacement per item (1) month prior to the end of the Guarantee Period. This includes dead plants, damaged plants, or plants that are, in the

opinion of the Owner in unhealthy or unsightly condition, or that have lost their natural shape and symmetry due to dead branches, excessive and unnecessary pruning, incorrect staking, or excessive defoliation.

a. Replace unacceptable plants with the same species, caliper, and/or equal size as the plants they replace, unless the Owner determines a substitute species plant of equal value may be provided.

3. If plants are stolen (theft) or damaged by acts of others (vandalism), the Owner will pay invoice cost only for the replacement plants with no mark-up and the Contractor will be responsible for the cost of labor to install the replacement plants.
4. Plant material replacements made by the Contractor must be completed during the spring (March 15 to May 15) or autumn planting periods (Sept 20 to Nov 15) unless approved by Owner's Representative. Plant material replacement and lawn repair must be subject to the same conditions and must be made in the same manner as specified for the original planting and must be done at no extra cost to the Owner.
5. After each replacement, the Contractor must submit a marked planting plan showing the exact location of each item replaced and the date when the replacement was made. Guarantee all replaced material during the Guarantee Period for an additional 365 calendar days from the date of replacement.

G. Plants will be reviewed prior to Final Acceptance by the Owner's Representative during the Guarantee Period to determine if any plant material replacement is required.

1.12 LANDSCAPE MAINTENANCE DURING GUARANTEE PERIOD

A. It is expressly understood that the Owner will be responsible, during the Guarantee Period, for normal establishment and maintenance of the project landscape.

1.13 WEED AND PEST CONTROL PLAN

A. Submit a Weed and Pest Control Plan for review and approval to the Owner's Representative prior to starting any landscape work.
   1. The Weed and Pest Control Plan includes:
      a. methods and scheduling of removal of weeds and control of pests located inside the tree and plant protection fencing where shown on Contract Drawings.
      b. methods of removal and scheduling of removal of weeds that occur in newly planted areas.
      c. methods of removal and scheduling of removal of invasive species and/or noxious weeds that occur within the project limit of work.
      d. timing and scheduling of control operations, and the name, application rate, and Material Safety Data Sheets (MSDS) of all proposed herbicides and pesticides.
         1) Furnish the Owner's Representative with a copy of the current product label and MSDS for each herbicide / pesticide and spray adjuvant to be used.
         2) Identify and list the target weeds and target pests to be removed specific to the project site.
   2. The plan shall be prepared and signed by a licensed commercial operator with a Washington State Department of Agriculture (WSDA) Commercial Applicator pesticide license.

B. Store herbicides and pesticides in an offsite location.

C. Consider herbicide and pesticide applications only as a last resort and only after other methods of control have proven ineffective. Preferred methods of weed control include mechanically or hand pulled weeds, reapply bark mulch after weed removal, and adjust watering schedule to avoid overwatering which encourages weed growth.

D. Use care to ensure confinement of chemicals within the areas designated. The use of spray chemicals must require the use of anti-drift and activating agents, and a spray pattern indicator, unless otherwise allowed by the Owner's Representative. Herbicides and pesticides must not be applied within 100-foot radius of on-site and off-site wells or open water bodies. Weed removal inside this 100-foot radius must be by hand or mechanical methods.
E. Apply post-emergent herbicides while plant material is green and growing tissue is present. Should unwanted vegetation reach the seed stage in violation of these Specifications, physically remove and bag the seed heads. Dispose of all physically removed vegetation and seed heads off-site.
F. Completely remove from the limits of work all noxious weeds (Class A, B & C) as defined by Pierce County Weed Control Board and invasive weeds, including but not limited to Horsetail (Equisetum sp.), reed canary grass, English Ivy, Himalayan blackberry, evergreen blackberry, policeman's helmet, bamboo, yellow flag iris, and Japanese knotweed.
    1. Where noxious or invasive weeds exist, remove the weed's foliage and roots, planting soil and subgrade soils and replace to a depth necessary to completely remove all viable weed seeds, roots, corms, and rhizomes.
    2. In areas where existing trees are to remain, remove all invasive species removal with hand tools. Use of heavy mechanical equipment under the drip lines of existing trees to remain is prohibited. Avoid damaging existing tree roots during invasive species removal. If existing tree roots are exposed outside of the tree's drip line, remove invasive species roots with hand tools to avoid further damage to the tree roots.
    3. Contractor is responsible for all costs to remove weeds, remove, and replace existing soil, and replant the plant material.
G. Schedule the chemical treatment for weed removal for the late summer or the early autumn unless the project construction working days fall outside of this time period, in which case determine the schedule in consultation with Owner's Representative. Alternative dates may be submitted for review & approval, provided treatments occur within a minimum of 3 weeks prior to mechanical removal of invasive plants.
H. The approved Weed and Pest Control Plan will be subject to revision dependent on results of the implemented Plan.
I. The Contractor assumes all responsibility for rendering any area unsatisfactory for planting by reasons of herbicide or pesticide application. Replace, repair and pay for all damages caused by negligence to the satisfaction of the Owner prior to final payment.

PART 2 PRODUCTS

2.01 MATERIALS AND EQUIPMENT

A. Provide all materials and equipment as required to complete the work as shown on the Contract Drawings and/or as described in the Specifications.

2.02 WATER

A. Make, at Contractor expense, whatever arrangements are necessary to ensure an adequate supply of water to meet the needs of this Contract.
B. Furnish necessary hose, equipment, attachments, and accessories for the adequate irrigation of planted areas.
C. All costs for water incurred during the contract period must be borne by the Contractor unless other arrangements are made with the Owner.

2.03 PLANT MATERIAL

A. The Contractor has two (2) options to secure approval of plant materials:
   1. Have plant material available at the project site for review during scheduled site visits.
   2. Have Owner's Representative review plants at the place of growth at the Contractor's expense.

B. Owner reserves the right to reject any or all plant material at any time until final review and acceptance. Remove rejected plants immediately from the site.

C. All plant material furnished by the Contractor must conform to the requirements of the current issue of "American Standard for Nursery Stock" (ASNS) and in addition, must comply with the following provisions:
   1. No less than 10% of each variety and/or species of plant delivered to the project must be accurately labeled with a securely attached, waterproof tag bearing the legible designation of the common name and full scientific name and size of plant. Include the nomenclature for hybrid, variety, or cultivar. Whether or not labeled, any plants, which do not conform to the Plant Schedule and/or Contract Drawings, must be replaced immediately with plants that conform to specifications.
   2. All plant material must meet State and Federal requirements with respect to plant health and absence of diseases and insect infestation.
   3. All plant material must be nursery grown stock that has been held in a nursery for at least one year.
   4. All plant material specified must be first-class representatives of their normal species or varieties in healthy growing condition with normal well-developed branch system and vigorous root systems.
      a. They must be free from disease and insect infestation, disfiguring knots, sun-scalds, abrasions of the bark, broken tops, broken branches, torn roots, and any other objectionable features.
      b. Plants, which have suffered damage as the result of girdling of the roots, stem, or a major branch; have deformities of the stem or major branches; have a lack of symmetry; have dead or defoliated tops or branches; or have any defect, injury, or condition which renders the plant unsuitable for its intended use, will be rejected.
   5. Large plants cut back to meet specified sizes will be rejected. Plants must not have cuts or pruning wounds over 3/4-inch diameter that are not satisfactorily callusing over.
   6. Plant material must not have weeds at the tops of rootballs or any foreign plant growth.
   7. Root balls of all plant materials must be solidly held together by a fibrous root system and must be composed only of the soil in which the plant has been actually growing. The ball must be securely wrapped with non-treated, jute burlap, or other packing material that is not injurious to the plant's life.
   8. Provide the number of plants shown on the Plant Schedule in Contract Drawings, or to cover at specified spacing's whichever is greater.
   9. Collected plant material may be used only when accepted by the Owner's Representative.
   10. Trees
      a. Trees must have been grown with sufficient spacing to allow for symmetrical branch development and full canopy which reflects the natural characteristics of the species. Tree trunks must not be noticeably imperfect in vertical alignment, have straight leaders, and there must be no "included bark" in the crotches between the trunk and side branches.
      b. Trees with multiple leaders, unless specified, must be rejected.
      c. Trees with a damaged or crooked leader, "Y" crotches, missing leaders, bark abrasions, sunscald, disfiguring knots, insect damage, or cuts of limbs over 3/4 inch in diameter that are not completely closed will be rejected.

d. Evergreen and deciduous trees must be furnished balled and burlapped (B&B) unless otherwise specified in the Contract. Broken or "made" root balls will not be accepted.
e. Trees grown in fabric bags must have a well-established root system reaching the sides of the fabric bag to maintain a firm ball when the fabric is removed, but must not have excessive root growth encircling the fabric bag. Fabric bags must be entirely removed prior to planting.
f. No pruning wounds must be present with a diameter of more than one (1) inch and such wounds must show vigorous callous on all edges. Trees must not be pruned within 6 months prior to delivery.

11. Provide tree root ball sizes complying with the latest edition of the ASNS. Cracked or mushroomed tree root balls are not acceptable.
12. Container-grown Stock:
    a. Plants grown in a pot or container must have been given a sufficient length of time for new fibrous root system to have developed to hold its soil together and keep the root mass firm and whole when removed from the container.
    b. Plants must not be loose in the container.
    c. Container stock must not be pot or root bound.
    d. Plants furnished in pots or other containers must be acclimated to outside conditions and equal to field grown stock. To acclimate plants to Northwest conditions, all plants used on the project must be grown continuously outdoors north of the 42nd Latitude (Oregon-California border) from not later than April 1 of the year prior to the time of planting.
13. Live Stakes:
    a. Live stakes are live woody plant cuttings without a previously developed root system. Source plants for live stake cuttings shall be dormant when cuttings are taken and all cuts shall be made with a sharp instrument. Cuttings must be obtained from a reputable nursery. Live stake cuttings shall have a straight top cut immediately above a bud. The lower rooting end shall be cut from one to two-year old wood. Live stake cuttings shall be cut and installed with the bark intact with no branches or stems attached, and be ½ to 1.5 IN diameter.
14. Seedlings:
    a. Seedling quality and size shall be either Plug +1(P+1), 1+1, and/or 2+1. Seedling stem and foliage shall be a minimum 8" in height.

2.04 PLANTING ACCESSORIES

A. Tree Stake Materials
   1. Tree Stakes must be 8-foot long 2-inch diameter pressure-treated lodgepole pine wood stakes, with chamfered tops and 6-inch long, conical points.
   2. Fastening must be webbed fabric tape, ½" – 1" wide, "Arbor Tie".
   3. Or approved equals.

B. Root Barrier
   1. Root barrier must be made of copolymer polypropylene, containing 50% postconsumer, recycled plastic with ultraviolet light inhibitors. Panels must be interlocking.
   2. Root barrier panels must be .08" thick, the color black, and at the height/depth indicated in the Contract Drawings.
   3. Root barrier available from the following sources:
      a. "DeepRoot", as manufactured by Deep Root, Inc., and distributed locally by Berkey Supply, Inc., Woodinville, WA, Ph. 425-487-3310 or www.berkeysupply.com.
      b. "Biobarrier", as manufactured by BBA Nonwovens Reemay, Inc., and distributed locally by Wilber Ellis, Auburn, WA, Ph. 253-351-6591 or www.wilberellis.com.

c. Or approved equal.

2.05 BRUSH PILE

A. Construct Brush Pile using tree branches salvaged from tree removal during site clearing and grubbing activities and from branches removed during creation of snags and habitat logs.

2.06 HABITAT LOG

A. Habitat Logs must be smooth, without bark, no burs, no split branches, or metal splinters or nails. Owner's Representative to approve source of logs and condition of logs prior to installation.
B. Construct habitat logs using tree trunks salvaged from tree removal during site clearing and grubbing activities. Remove foliage and cut back branches. Branch stubs are ok as long as maximum length does not exceed 12 inches.

2.07 BARRIER LOG

A. Barrier Logs must have no burs or metal splinters or nails. Owner's Representative to approve source of logs and condition of logs prior to installation.
B. Construct barrier logs using tree trunks salvaged from tree removal during site clearing and grubbing activities. Remove foliage and cut back branches. Branch stubs are ok as long as maximum length does not exceed 12 inches.

2.08 HERBICIDE & PESTICIDE

A. All chemical herbicides pesticides must be labeled and used in accordance with governing agencies defined in the Weed and Pest Control Plan. The Contractor must use extreme care to ensure confinement of the chemicals within the areas designated. The use of chemical herbicides and pesticides must require the use of anti-drift and activating agents and a spray pattern indicator, unless otherwise allowed by the Owner.
B. All chemical herbicide and pesticides must be carefully selected in accordance with U.S. Environmental Protection Agency (EPA), Washington State Department of Ecology, Washington State Department of Agriculture, King County Noxious Weed Control Board, and local sensitive area ordinances and regulations.

2.09 WATER BAGS

A. Water bags must be Treegator, slow-release watering bags, supplied by Spectrum Products Inc (886-873-3428), or approved equal.

PART 3 EXECUTION

3.01 GENERAL

A. Provide adequate and proper care of all plant material (both retained and newly installed) and landscape work, including irrigation, done on the project from the time of installation to the end of the Guarantee Period.
B. Care should be taken to avoid damage to existing trees and their roots. Where excavating for new construction is required within tree and plant protection areas, excavate by hand to minimize damage to roots and perform as follows:
   1. Use narrow tine spading forks and comb soil to expose roots.
   2. If main lateral roots are immediately adjacent to location of new construction, the contractor shall notify the Owner prior to any excavation.

3. Do not allow exposed roots to dry out.
4. Provide temporary minimum four (4) inch depth of mulch and/or plastic covering, or equivalent.
5. Maintain in moist condition until covered with planting soil or mulch.

3.02 TRANSPORT AND MOVING PLANT MATERIAL

A. Pack and ship plant material in accordance with prevailing nursery industry standard practice for the type of plant being shipped, and protect at all times against drying sun, wind, heat, freezing, and similar detrimental conditions both during shipment and during related handling.
B. Plant material transported in enclosed vehicles must receive adequate ventilation. Plant material transported in open vehicles must be protected by suitable cover material such as tarpaulins.
C. Wrap the foliage of large trees to prevent damage and windburn. Provide adequate protection so that trunks are not scarred in transport and branches are not broken.
D. Wrap tree trunks with protective covering prior to handling and loading. Remove covering at the time of plant materials inspection at the job site so that trunk bark and root crown are completely visible.
E. Move all plants carefully. Exercise care in handling, loading, unloading, and storing of plant materials. Prevent damage to all plant materials. Do not drag plant material without proper root and branch protection.
   1. Handle trees by the rootball only; not the trunks, stems, or tops.
   2. Handle container grown plants by container only; not the stems or tops.
F. Tie branches on trees and large shrubs as necessary. Protect tree bark from rope chafing and damage. No twine, rope, or wire may be used in a manner that could damage or break the branches, tree trunks, or tree bark.
G. Replace plant material damaged in any way from transport and moving activities with undamaged and acceptable plant materials.

3.03 TEMPORARY STORAGE OF PLANT MATERIAL

A. “Heel-in” plants that cannot be installed within 24 hours after arrival to the project site in accordance with accepted horticultural practice and the following requirements:
   1. Protect rootball of ‘balled and burlapped’ or ‘fabric-grow bag’ plants with moist earth, sawdust, bark mulch, or other acceptable material and the material must be kept continuously moist. Do not use straw or hay to retain moisture.
   2. Protect the root system of all container-grown plants from drying out. Set plants in shade and keep roots moist by covering with mulch, soil or other acceptable means of retaining moisture. Do not deliver nor store plant materials at the project site during freezing weather conditions or drought conditions.
   3. Protect plant materials at all times from mechanical damage, excessive wet and/or water-logged conditions, drying out, and extreme weather including drying winds, freezing temperatures (at or below 32°F), and direct sun.
   4. Spray foliage on plants with an anti-desiccant during severe drought and/or excessively hot periods. Anti-desiccant must be specifically formulated for the species of plants it will be applied to.
   5. For seedlings, stack no more than 3 bags or bundles high, allowing space for air circulation. Do not open bags until ready to plant within 8 hours of opening. Repair torn bags immediately

3.04 PLANT LAYOUT:

A. Place plants at the spacing and locations indicated in the Contract Drawings.

B. Stake or otherwise mark the location of each plant. No work may start on the installation of plant material until plant layout and staking has been verified and approved by the Owner's Representative.
C. Notify the Owner's Representative at least 5 working days in advance of projected completion of staking and allow 2 working days after the projected completion date, for layout review and any adjustments to the layout.
D. Sequence the installation of plants to minimize disturbance to any newly installed plants and any existing landscape.

3.05 PLANT INSTALLATION:

A. General
1. All plant material must be inspected and determined by the Owner's Representative to be acceptable for planting, prior to installing.
2. Do not install plants in weather conditions detrimental to plant material:
a. during freezing weather or when the ground is frozen.
b. when ground is excessively wet, water-logged, and/or saturated.
c. when ambient air temperatures drop below 40°F or rise above 85°F.
d. when wind velocity exceeds 25 MPH.
3. Remove plants from containers in a manner that prevents damage to the root system. Containers may require vertical cuts down the full depth of the container to accommodate removal. Loosen all circling roots to ensure natural directional growth after planting.
4. Soak all tree rootballs and container plants which have become dry prior to planting.
5. For work performed during weather conditions detrimental to plant material, the Contractor may be required to provide the following services at no additional cost:
a. Expert consultations with an ISA certified Arborist (for trees) or other expert as approved (for other plant material) to determine what plant care measures are required to maintain the plants installed in a healthy and vigorous condition during the unacceptable weather conditions.
b. Replacement of all work performed during unacceptable weather conditions.
c. Additional protection, such as shade structures for large trees, watering, and maintenance of the plant materials stored or installed during the unacceptable weather conditions and responsibility for all additional costs incurred.
6. Perform planting during the period between September 1 and May 15. Planting at other times only allowed by written permission by the Owner's Representative and only if an automatic irrigation system is available through the summer.

B. Tree Installation
1. Provide the Owner's Representative a minimum 5 working days advance notice of the first tree(s) to be planted. The Owner's Representative must be present to approve the planting method of the first tree(s). Apply the approved method consistently for all remaining installation of trees.
2. Tree pit excavation near a curb or sidewalk must allow a horizontal clearance of at least 3 inches from the curb or sidewalk without undermining foundation support of adjacent improvements.
3. Before planting, completely remove all twine, burlap, wrapping material, fabric grow bags, and wire baskets from tree root balls and from the planting hole. For 'ball and burlap' trees, loosen roots showing at the edge of root balls without tearing.
4. Inoculate root balls of trees with mycorrhizae inoculant in accordance with the manufacturer's recommendations.
5. Set trees in the planting hole to proper grade and alignment.

a. Set crown of the tree root ball one (1) inch above the finish grade elevation after settlement of the soil.
b. Set trees upright, plumb, and faced to give the best appearance or relationship to each other or adjacent structure(s).
c. Place tree root balls in the planting pit in a manner that ensures the roots are properly spread for lateral directional growth

6. Place backfill and compact backfill by water settling. When planting hole is 3/4 backfilled, apply water to water-settle the backfill and remove voids. After settling occurs, add enough soil to cover the roots.
a. Do not use frozen, slurry, or muddy mixtures for backfilling.
b. Do not back fill soil against trunks or stems or above grafts on grafted trees.
c. Form a watering ring of soil around the edge of each planting hole to retain water.

C. Shrub, Groundcover, Live Stake and Seedling Installation
1. Keep plants supplied in containers or bags (live stakes and seedlings) moist at all times. Remove plants from the container in a manner that prevents damage to the root system. Do not remove plants from the container by pulling on the stem(s)
2. Remove all plastic, burlap, ties, and other container material from the plant prior to installation. Containers may require vertical cuts down the full depth of the container to accommodate removal.
a. Space groundcover plants using triangular spacing in accordance with indicated dimensions and offsets. Adjust spacing as necessary to evenly uniformly fill planting bed with indicated quantity of plants.
b. Set plants in the planting hole to proper grade and alignment.
1) Set upright.
2) Install plants so that top of root ball, as indicated by the root flare, is flush with the finish grade after settlement of the soil.
c. Firmly tamp or compact backfill without voids around the roots and then cover with mulch. Water immediately after installation of plant material.

D. Pruning
1. At the time of planting, prune only per Owner's Representative field directive and only to remove minor broken or damaged twigs and branches.
a. Do not head or prune without reason or prior approval.
b. Do not prune new plant material that impacts a tree's central leader, removes more than 5% of the foliage, or if foliage has not developed, more than 5% of the foliage buds, or significantly alters the natural form of the plant material being pruned.
c. Prune branches only at the branch collar. Stubs or flush cuts are not acceptable.
d. Prune in such a manner as to retain or to encourage the natural growth characteristics and proper form of the particular plant.
e. Prune with a sharp tool to produce a clean cut without bruising or tearing the bark. Make pruning cuts only in the living wood where callous tissue can develop properly.

E. Resetting Trees and Shrubs
1. Reset trees and shrubs found that are out of plumb alignment, by loosening the soil around the root system, re-setting the tree or shrub, backfilling, and compacting. Do not adjust by pushing, pulling or restraining the trunk or stem. Replace all trees and shrubs, that in the opinion of the Owner's Representative, have damage to the root system that has occurred as a result of re-setting a tree or shrub.

3.06 PLANTING ACCESSORIES INSTALLATION

A. Root Barrier Installation

1. Install root barrier panel per manufacturer's written directions and in locations shown in the Contract Drawings.
2. Install panels immediately adjacent to paving with ribs facing towards the tree roots. Trenches must be deep enough so that top of root barrier is two (2) inches below the top of mulch.

B. Install Brush pile as indicated on Contract Drawings.
C. Install Habitat Log as indicated on Contract Drawings.
D. Install Barrier Log as indicated on Contract Drawings.
E. Install Water Bags on all proposed trees , excluding the seedling trees, that do not have root watering systems as shown on the Irrigation Drawings.
F. Install Tree Staking and Fastening
   1. Stake all trees at the time of planting as indicated on Contract Drawings.
      a. Install stakes in a workmanlike operation.
      b. Damaged stakes must be promptly removed and replaced throughout the duration of the Contract.
   2. Remove all tree stakes and ties at the end of the Guarantee Period.

3.07 CLEAN UP

A. Perform cleaning during installation of the landscape work. Water, dirt, debris, and rubbish to be kept off of all paved areas, pathways, and permeable pavements. Wash clean all paved areas.
B. Upon completion of landscape work, remove all excess materials, soil, debris, and equipment from the site.
C. Repair all damage resulting from landscape work.
D. Compact and rake planting areas immediately adjacent to walks, curbs, pavements, driveways, and other improvement to accommodate the depth of mulch cover, with the mulch surface flush with the surface of adjacent improvement.
E. Remove all metal, wood, and concrete debris, protective wrappings and coverings, and shipping materials from the project site.
F. Leave project in first quality condition.

3.08 SUBSTANTIAL & PHYSICAL COMPLETION

A. Reviews to determine Substantial Completion and Physical Completion of planted areas will be made by the Owner's Representative, upon the Contractor's written request.
B. Provide notification at least 5 working days before requested review date(s).

3.09 FINAL ACCEPTANCE

A. Upon completion of the Guarantee Period, notify Owner's Representative at least 5 working days before the Final Acceptance Review.
B. The Owner assumes all plant maintenance upon Final Acceptance
C. Final acceptance of all landscaping work described in this Specification section, with the exclusion of possible replacements of plant materials under the Guarantee Period, must be made by the Owner's Representative to determine 100% completion and acceptance of the planting work.

END OF SECTION

SECTION 32 91 13
SOIL PREPARATION

PART 1 GENERAL

1.01 SUMMARY

A. The work includes the furnishing and installation of soil and/or amendments for planted areas per 32 93 00 and seeded areas per 32 92 19.

1.02 QUALITY ASSURANCE

A. Ensure all products supplied comply with applicable state and local codes.
B. Site inspections will be made by the Owner's Representative.
   1. Request Owner's Representative inspection at least 48 hours in advance of the time inspection is required. Inspections for the following are required:
      a. Subgrade prior to installation of any soil amendments.
      b. After scarification of soil amendments into subgrade and prior to planting or installation of other surface materials.

1.03 SUBMITTALS

A. Provide soil analysis and test reports from an approved soil testing laboratory. Do not incorporate soil amendments in the planting work until the Soil Test Reports are approved by the Owner's Representative. Provide Soil Test Reports for:
   1. One (1) representative sample per acre of subgrade soil within limit of work, excluding Off-Leash Area. Each subgrade soil sample shall consist of a composite of soils collected from a one-inch, 8-inch, and 16-inch depth.
   2. One (1) representative sample of each soil mix specified.
   3. One (1) representative sample of stockpiled native topsoil.
B. The Contractor is responsible for the cost for soil testing.
C. The Contractor is responsible for cost of the soil amendments required for each specified soil mix, as recommended by the soil testing laboratory. The Contractor shall determine the cost for the subgrade soil amendments as recommended by the soil testing laboratory. Costs shall be determined on a unit price basis and agreed upon by a Change Order prior to commencement of subgrade soil amendment work.
D. Perform soil testing in accordance with the most current edition of Methods of Soil Analysis published by the Soil Science Society of America, Inc. The Soil Test Reports must include the following:
   1. Fertility Analysis:
      a. Extractable analytes: nitrate, nitrogen, ammoniacal nitrogen, phosphorous, potassium, calcium, magnesium, copper, zinc, manganese and iron.
      b. Saturation extract values: calcium, magnesium, potassium, sodium, boron, sulfate, pH, lime content, salinity and sodium adsorption ratio.
   2. Mechanical Analysis:
      a. Organic percent by over-dried weight.
      b. USDA particle size and gradation.
   3. Cation Exchange Capacity (CEC).
   4. Soil Test Report recommendations for soil amendments to effectively amend and develop a productive soil.

5. The Soil Test Report shall include a written statement from the soil testing laboratory that the laboratory has reviewed the planting plan and this planting specification, and that its recommendations respond to the specific needs of the Contract.

1.04 REVIEW OF SOIL PREPARATION

A. Site Inspections will be made by the Owner Representative
   1. Request Owner Representative inspections at least 48 hours in advance of the time inspection is required.
   2. Inspections for the following critical path items are required:
      a. When subgrade has been established and scarification completed.
      b. Observance of the subgrade percolation tests.
      c. During soil preparation and soil installation activities.
      d. Finish grading prior to any planting.

1.05 TIMING OF WORK

A. Do not work soils in the presence of standing or ponding water; nor in freezing conditions.

1.06 PRODUCT HANDLING

A. Keep streets, sidewalks and site clean, free from debris and affected drains open and free flowing at all times. Protect drains with filter fabric covers during construction. Employ appropriate erosion control measures.

1.07 PROTECTION OF WORK, PROPERTY, & PERSONS

A. Take all necessary precautions to protect work in progress, all property, persons, walks, curbs, rooftop membranes and structures, utilities, pavement, and buildings from any damage that might be incurred arising from this Contract.
B. Protect all paved surfaces (permeable and impermeable) from staining or clogging by planting soil and mulch. Do not remove protection until after initial acceptance of all work. Remove excess soil and debris from the site and repair all damage resulting from construction operations.
C. Protect all landscape work from theft and vandalism until Physical Completion of work.
D. Pay for any damage incurred by failure to take precautions.

PART 2 MATERIALS

2.01 EXISTING SUBGRADE SOIL

A. Provide soil tests of the subgrade soil per Soil Test Reports section herein.
B. Submit subgrade Soil Test Reports and change order request to the Owner's Representative for review and acceptance prior to procuring soil amendments, and incorporating into the subgrade soil.
C. Determine the quantity of soil amendments and procure all soil amendments as recommended by the subgrade soil test report results.
D. Submit a copy of the itemized sales receipt showing purchase of and quantity of soil amendments for both subgrade soil and planting soil amendment to the Owner's Representative.

Provide copy of soil amendment labels showing grade furnished, certification of quality, and guarantee information.

2.02 PLANTING SOIL

A. Planting Soil must be a two-way mix soil consisting of 1/3 compost and 2/3 sandy loam by volume Thoroughly mixed together with the soil amendments as required by the Soil Test Report. Planting Soil must have pH range of 5.0 to 7.0 and an organic content between 10% and 15% by weight as tested by the Loss on Ignitions method.
B. Provide compost, biochar, sandy loam, and sand soil components as specified herein.
C. Planting soil shall be free of pests, toxic substances and other undesirable material harmful or detrimental to ornamental plant growth. Soil mixes shall not contain any viable seeds, roots, or rhizomes capable of sprouting any State-listed noxious weeds or invasive root propagating plants including but not limited to Horsetail, Evergreen Blackberry, English Ivy, Old Man's Beard, Invasive Knotweed, etc. Remove and replace soil found to contain these prohibited viable plant materials at the Contractor's expense.

2.03 COMPOST

A. Compost must be Medium Compost and comply with the requirements of Washington State Department of Transportation Standard Specification 9-14.4(8).
B. The compost must be tested within 30 calendar days of proposed use.
C. Prior to use or installation, compost delivered to the project site must have a Solvita Compost Maturity Test of six (6) or above. Solvita Compost Maturity Test is available from Woods End Research Laboratory, phone (207) 293-2457, or 1(800)451-0337, or. The cost for testing is the Contractor's responsibility.
D. Submit compost sources to the Owner's Representative for review and approval prior to use on the project site.
E. Compost available from the following sources:
    1. Cedar Grove Compost; Maple Valley, WA; (425) 432-2395.
    2. Pacific Topsoils Inc; Everett, WA (425) 337-2700.
    3. Vern's Organic Topsoil & Bark; Poulsbo, WA (360) 779-2764.
    4. Lenz Enterprises; Stanwood, WA (360) 629-2933.

2.04 SANDY LOAM

A. Sandy Loam shall be topsoil as defined by the United States Department of Agriculture Classification system and the requirements as described herein.
B. Sandy Loam must consist of loose, moderately well-drained, and friable soil. And be free of stones, debris, and/or similar objects. Sandy Loam should be fertile and free-flowing (pulverized).
C. Sandy Loam must be free of pests, toxic substances and other undesirable material harmful or detrimental to ornamental plant growth.
D. Sandy Loam must not contain any viable seeds, roots, or rhizomes capable of sprouting any State-listed noxious weeds or invasive root propagating plants including but not limited to horsetail, English ivy, clematis, knotweed, etc. Remove and replace soil found to contain these prohibited viable plant materials at the Contractor's expense.
E. Sandy Loam must have a pH between 5.0 to 7.0 and organic matter percentage of 2% min. – 10% max. (by weight). Assume a relative compaction of 85% of modified maximum dry density (ASTM D 1557). Particle Size must meet the following sieve requirements:

Sieve Size	Percent Passing
1”	100 %
½”	> 90%
#10	> 70%

2.05 MULCH

A. Wood Chip Mulch must be coarse ground wood chips derived from the mechanical grinding of whole trees or portions of trees. It may contain wood, wood fiber, roots, bark, branches, and leaves, but must not contain visible amounts of soil. It must be free of weeds and weed seeds, including plants on the Pierce County Noxious Weed list and must be free of invasive plant portions capable of resprouting, including but not limited to horsetail, English ivy, clematis, Japanese knotweed, etc. It must not contain more than 1/2% by weight of manufactured inert material (plastic, concrete, ceramics, metal, etc.).
   1. Wood chip mulch, when tested, must meet the following loose volume gradation:

	Percent Passing	
Sieve Size	Minimum	Maximum
2”	95	100
1”	0	20
5/8”	0	50
1/4”	0	40

   2. Particles must not be longer than eight inches.
   3. Acceptable substitutes, subject to the Owner Representative’s approval, include chipped or shredded woody material left from tree trimmings, meeting the above size and inert material requirements, derived from composting operation screening (“overs”), or derived from recycling of clean dimensional lumber (e.g. pallets or framing lumber) that has passed through a metal removal process to meet the 1/2% manufactured inert standard above.

2.06 FERTILIZER AND SOIL AMENDMENTS

A. Furnish fertilizer and soil amendment manufacturer’s quality compliance certification.
B. Fertilizer and soil amendments must be packaged in new, unopened, waterproof, containers or non-overlaid bags clearly labeled as to weight, chemical analysis, manufacturer and content in accordance with State and Federal Law.
C. Store fertilizer and soil amendments in such a manner as to prevent wetting and deterioration. Do not store fertilizer and soil amendments with plant materials.
D. Agricultural lime must be dolomitic limestone containing not less than 85% of total carbonates. Limestone must be ground to such fineness that 100% will pass a No. 20 sieve.
E. Iron sulfate must be granulated ferrous sulfate containing a minimum of 20% iron and 10% sulfur.
F. Fertilizers must be according to the following:
   1. Lawn Starter Fertilizer must be ‘Starter Feed’ (7-7-2) 100% Organic Fertilizer, as manufactured by Walt’s Organic Fertilizer Co. or approved equal.
   2. Lawn Follow-Up Fertilizer must be ‘Regular Feed’ (9-3-5), and must be 100% Organic Fertilizer as manufactured by Walt’s Organic Fertilizer Co., or approved equal.
   3. Fertilizers must be a complete commercial brand with chemical analysis shown on unopened and undamaged container when delivered.
   4. A minimum of 50% of any nitrogen fertilizer must be in a slow-release form such as sulfur-coated or polymer-coated urea, IBDU, trinitromethane (Nitroform), or organic forms.

PART 3 EXECUTION

3.01 GENERAL

A. Do not be place, disk, scarify, or work soil when the ground, subgrade, or planting soil is frozen, excessively wet or saturated, if there is ponding water, or, in the opinion of the Project Representative, in a condition detrimental to the Work. Notify Project Representative immediately in writing of these detrimental conditions. Extra or corrective work arising from failure to notify in writing and continuing work in detrimental conditions, is at the Contractor's risk and expense.

B. Apply and shape the soil lifts in such a manner that the planting area has a continuously sloped final surface that allows for drainage from higher elevations to lower outer edges of the planting area.

3.02 PREPARATION OF SUBGRADE

A. Verify the existence of proper rough grades and subgrade elevations prior to beginning soil preparation work. All planting area excavation must allow for compost, sandy loam, planting soil, and mulch depths as indicated in Contract Drawings.

B. Clear subgrade of all debris including concrete, structural fill, stumps, sticks, roots, and rocks or lumps larger than one (1) inch.

C. Percolation Test

1. After the subgrade has been prepared, perform a percolation test by excavating 3 pits that are 2 feet in depth and minimum 2 feet in diameter. Locate the pits per Owner's Representative field directive. Fill each pit with water and allow the pit to drain for 24 hours. After 24 hours, re-fill the pit with water. Notify the Owner's Representative immediately in writing, if the time required for the pit to drain completely after being filled the second time is greater than 24 hours.
2. The Contractor must be paid for work required to solve the drainage problem, such as, installation of French drains or drainage sumps, at a unit price basis and agreed upon by a Change Order prior to commencement of work.
3. Subgrade preparation and percolation tests must be reviewed and approved by Owner's Representative prior to proceeding with the placing of planting soil.
4. Placing of imported material constitutes acceptance of subgrade conditions by Contractor.

3.03 SOIL PREPARATION

A. Subgrade Scarification

1. Thoroughly scarify subgrade to the depth(s) as shown in Contract Drawings. If additional scarification is required to eliminate surface water ponding, notify Owner's Representative of problem areas.
2. After scarification, remove all debris or rocks over one (1) inch in size and establish proper grades.
3. The scarification process must be observed and approved by Owner's Representative prior to installing planting soil.

B. Placing Soil, Fertilizers, and Soil Amendments:

1. For Lawn Seed and No Mow Seed Areas:
   a. Place ~~Planting Soil~~ Compost and thoroughly scarify soil to a minimum depth shown on Soil Preparation Details in contract documents.

b. Incorporate specified soil amendments per soil laboratory test recommendations, by broadcasting over the entire area at an even distribution and rate, then broom rake into the top inch of soil at the application rates per soil laboratory test recommendations.
c. Owner's Representative must review and approve soil preparation work between steps.

2. For Bioretention Seed Mix, see the Civil Storm Drainage contract drawings and Specification 33 40 00 Storm Drainage.
3. For Temporary Erosion Control Seed Mix, see Specification 31 25 00 Erosion Control and Sedimentation Control Section 2.02.
4. For Planting Areas:
   a. See soil preparation details shown in Contract Drawings.
   b. Compact each lift of planting soil before installing the additional lift of soil.
   c. Apply and incorporate the following by broadcasting over planting soil at an even distribution and rate prior to installation of plants. Then, rake into the top 2 inches of planting soil. Do not rototill.
      1) Soil amendments for planting areas must be applied at rates per soil testing laboratory recommendations.
      2) Do not apply fertilizers to planting soil.
   d. Owner's Representative must review and approve soil preparation work between steps.

C. Finish Grading
1. Finish grade is defined as the top surface of soil prior to the installation of plant material, mulch and seed.
2. Provide for surface drainage, cutting all necessary drainage swales, and conform to finish grades shown in the Contract Drawings.
3. Compact the finish grade of planting and seed areas to 85% of maximum dry density as determined by ASTM: D 1557.
   a. Protect placed soils from excessive compaction during construction. Loosen soil that become excessively compacted during construction with approved methods prior planting, seeding, or sodding.
   b. Scarify any areas that have become overly compacted to a depth of 4 inches, then finish grade as described herein.
   c. If soil is dry, lightly sprinkle with water prior to compacting or rolling.
4. After installing soils, fertilizers, and amendments, drag to an even grade, remove debris and rocks larger than one (1) inch in diameter that appear at the surface, and then roll for firmness prior to planting. Roll finish grades in two directions, the second rolling at right angles to the first. Lightly rake surface at a right angle to the second rolling direction.
5. After compacting, finish grades in seed areas must be ½ inch below the top of adjacent walks, curbs and/or other hard surfaces.
6. After compacting, finish grades in planting areas must be 4 inches below the top of adjacent walks, curbs and/or other hard surfaces.
7. After compaction and settling of soil, provide additional soil as needed to bring finish grade up to the specified levels.
8. All planting and seed areas must be finish graded and accepted by the Owner's Representative before commencement of plant and sod installation.
9. Install mulch so that top of mulch is flush with the top of any adjacent paved surface such as sidewalk, curb, and other pedestrian walking area.

END OF SECTION

SECTION 33 30 00
SANITARY SEWER

PART 1 GENERAL

1.01 SUMMARY

A. Install sanitary sewer pipe and pump station wetwell using the materials as shown in the Contract Drawings and/or as specified in the Specifications.

1.02 SCOPE OF WORK

A. Furnish all materials, equipment, labor and related items necessary to complete the work shown in the Contract Drawings and/or as specified in the Specifications. The work included in this section (whether mentioned or not) shall consist of all labor, tools, materials, tests, permits and other related items necessary for the provision and installation of sanitary sewer infrastructure.

1.03 REFERENCES

A. This specification section incorporates by reference the latest revisions of the following documents.
   1. Washington State Department of Transportation (WSDOT) Standard Specification for Road, Bridge and Municipal Construction.
   2. Pierce County Accommodating Utilities Manual
   3. American Society of Testing and Materials (ASTM)
      a. ASTM D3034 – Sewer Pipe and Fittings
      b. ASTM C1227 – Monolithic or Sectional Precast Concrete Septic Tanks.
      c. ASTM C913 – Precast Concrete Water and Wastewater Structures.
      d. ASTM C890 – Minimum Structural Design Loading for Monolithic or Sectional Precast Concrete Water and Wastewater Structures.
      e. ASTM 858 – Underground Precast Utility Structures
      f. ASTM D2466 – PVC Plastic Pipe Fittings, Schedule 40
      g. ASTM D1785 – PVC Plastic Pipe, Schedule 40
      h. ASTM C1107 – Packaged Dry, Hydraulic-Cement Grout (nonshrink)
      i. ASTM D2665 – PVC Plastic Drain, Waste, and Vent Pipe and Fittings
   4. American Water Works Association (AWWA)
      a. AWWA C906 – Polyethylene Pressure Pipe and Fittings
   5. Washington Industrial Safety and Health Administration (WISHA)
   6. Office of Safety and Health Administration (OSHA) Safety Standard
   7. NSF/ANSI Certification
      a. 14 – Plastic Piping System Components and Related Materials

B. In case of conflict between the requirements of this specification section and the Contract Drawings, the requirements of the contract specification section shall prevail.

1.04 RELATED WORK

A. Related work in other sections of these Specifications includes but is not limited to:
   1. Specification 31 23 33 – TRENCHING, BACKFILLING, AND COMPACTING FOR UTILITIES
   2. Specification 31 05 16 – AGGREGATES
   3. Specification 33 32 00 – ON-SITE SEWAGE SYSTEM

1.05 QUALITY ASSURANCE

A. Manufacturer and Installer Qualifications: Firms regularly engaged in manufacture or installation of sewer projects consisting of similar scope and materials.
B. General: Use adequate numbers of skilled workmen who are thoroughly trained and experienced in the necessary craft and who are completely familiar with the specified requirements and methods needed for proper performance of the work in this section.

1.06 SUBMITTALS

A. Submit Manufacturer's Literature on proposed material prior to the start of any work, submit three copies of product information correlated to specified requirements.
B. No installation of the material concern shall be made until written approval has been obtained from the Engineer. Approval of materials and equipment shall in no way obviate compliance with the plans and specifications.
C. Record Drawings:
    1. One complete set of Drawings will be provided as record Drawings which shall be separate, clean, blueline prints reserved for the purpose of showing a complete picture of the work as actually installed. The contractor shall coordinate the record Drawing requirements with the TPCHD Septic Inspector.
    2. These Drawings shall also serve as work progress report sheets and the Contractor shall make any notations, neat and legible, thereon daily as work proceeds. These Drawings shall be available for inspection at all times and shall be kept at the job.
    3. All buried piping and indicated future connections, exterior of any building, shall be located both by depth and by accurate measurement from a permanently established landmark. All notations on record Drawings of buried piping shall be made before any backfill is started.
    4. At completion of the work, these record Drawings shall be signed by the Contractor, dated, and return to the Architect/Engineer.
D. Sewer Structure Verification Survey:
    1. Contractor shall submit to the Architect/Engineer an as-built survey, prepared by a Licensed Professional Surveyor, showing each sewer structure installed by the Contractor during construction. Submit the survey on paper stamped by a Licensed Professional Surveyor and in digital format (AutoCAD). The sewer structure verification survey shall include graphic horizontal location of the center of each structure (to the nearest tenth of a foot) relative to the property boundaries and right of ways (per the project survey) and the vertical elevations of all structure lids and pipe inverts to the nearest five hundredths of a foot. Clean-outs are excluded from survey requirements. Changes during construction to cleanout locations or elevations shall be noted on the Contractor's Record Drawing submittal.
E. Tank Submittals:
    1. Manufacturer’s data sheets for each tank showing:
        a. Material specification (ASTM C1227 compliance)
        b. Model number, tank volume/capacity
        c. Reinforcement details and design loads
        d. O&M manuals for tanks and equipment
        e. Installation instructions
        f. Recommended inspection and service schedule.

1.07 DELIVERY, STORAGE, AND HANDLING

A. Delivery and Storage:

1. Piping: Inspect materials delivered to the site for damage. Store with minimum of handling. Store materials on site in enclosures or under protective coverings. Store plastic piping and rubber gaskets under cover out of direct sunlight. Do not store materials directly on the ground. Keep inside of pipes and fittings free of dirt and debris.
2. Metal Items: Check upon arrival and identify and segregate as to types, functions, and sizes. Store in a manner affording easy accessibility and not causing excessive rusting or coating with grease or other objectionable materials.

B. Handling: Handle pipe, fittings, and other accessories in such a manner as to ensure delivery to the trench in sound, undamaged condition. Take special care not to injure fittings. Carry pipe to trench; do not drag it. Do not leave rubber gaskets and plastic piping that are not to be installed immediately in the sunlight, but store under cover out of direct sunlight.

PART 2 PRODUCTS

2.01 SUBMERSIBLE WASTEWATER PUMP

A. General Requirements
1. Provide factory-assembled submersible wastewater pumps rated at 2.2 HP, 460V, 3-phase, 60 Hz.
2. Pumps shall be explosion-proof (FM Class 1, Div 1, Groups C & D) and suitable for continuous submergence to 65 feet.

B. Performance Criteria
1. Max motor speed: 1,760 rpm.
2. Max shaft power (P2): 0.53 HP at duty point.
3. Capable of 30 evenly spaced starts per hour and full-curve operation.

C. Pump Construction
1. Impeller: Self-cleaning, axial-lift design, cast from 25% chrome alloy (A532 IIIA).
2. Insert ring: Adjustable clearance, with guide pin for fiber redirection.
3. Pump housing: ASTM A-48, Class 35B, prepped for sump mixing valve and 3" discharge flange.
4. Shaft: ASTM A479 S43100-T, supported by deep groove and angular contact bearings ($L10 \geq 50{,}000$ hrs).
5. Shaft seals: Tandem mechanical seals (WCCR and AL_2O_3), maintenance-free, bi-directional.
6. Seal cavity: Spiral groove for grit ejection; lubricant chamber with expansion capacity and external access.

D. Motor and Protection
1. Induction motor, squirrel cage rotor, IP68, IEC 60034 compliant.
2. Class H insulation (356°F), with 3 embedded thermal switches and 1 float-type leakage sensor.
3. Cable: 30 ft screened, oil-resistant CPE rubber, NEC/ICEA compliant, watertight to 65 ft.
4. Cable entry: Dual elastomer sleeves with washers; no epoxy or silicone permitted.

E. Installation Features
1. Impeller mounted directly to motor shaft (no couplings).
2. Guide rail system for removal without entering wetwell.
3. Metal-to-metal discharge connection; no gaskets or O-rings allowed.
4. Terminal board sealed from motor by elastomeric compression seal.

F. Coatings and Finish
1. All castings blasted and coated with two-pack oxyrane ester (min. 120 microns).
2. Zinc primers not permitted.

G. Testing and Certification

1. Each unit shall undergo:
    a. 3-point hydraulic performance test
    b. No-leak seal integrity test
    c. Electrical integrity test
2. Manufacturer shall provide ISO 9001 certification and quality control plan upon request.

H. Flygt NP 3085 SH3 Adaptive 456 or equivalent.

2.02 FLYGT MIXING AGITATOR

A. Description: Provide and install a Flygt submersible mixing agitator compatible with submersible wastewater pump for effective homogenization of sludge and wastewater.

B. Model: Flygt SR 4610-4620, 60 Hz or equivalent.
1. Squirrel cage 4-pole induction motor, 60 Hz frequency, capable of 30 evenly-spaced starts per hour.

C. Performance Requirements:
1. Capable of mixing sludge concentrations up to 8% dry solids.
2. Designed for continuous duty with self-cleaning impeller technology to minimize clogging.
3. Sized to maintain suspension and prevent sedimentation in tank geometry coordinated with NP 3085 SH3 pump operation.

D. Materials:
1. Self-cleaning axial-flow propeller in Hard-Iron or stainless steel.
2. Epoxy-coated cast iron housing (min. 120-micron DFT)
3. Tandem mechanical seals; lubricated, externally accessible seal chamber.

E. Installation & Integration:
1. Shall be removable without wetwell entry.
2. Controlled independently or via shared pump panel.

F. Testing & Documentation
1. Factory-tested for performance, seals, and insulation.
2. Submit product data, O&M manuals, and ISO 9001 certs.

2.03 SEWAGE SYSTEM PUMP CONTROLS AND CONTROL PANEL

A. Provide a complete grinder pump control system for wetwell pumps, including submersible pump, mercury-free float switches, and a waterproof control panel. The system shall ensure safe, code-compliant operation and alarm functionality in accordance with TPCHD and WAC 246-272A requirements.
1. Control panel requirements:
    a. UL 508A listed, NEMA 4X-rated enclosure (stainless steel with inner door)
    b. Components:
        1) Circuit breaker and motor contactor
        2) Anti-condensation heater
        3) Ventilation fans
        4) Circuit breaker VFD starters
        5) Control power transformer
        6) Transformer primary fuse protection
        7) Hand-Off-Auto (HOA) switch
        8) Lightning arrestor
        9) Ultrasonic with ISR barriers
        10) Redundant ISR float control
        11) Audible and visual high-water alarm
        12) 30mm oil-tight pilot devices
        13) Terminal strip and pump run indicator

c. Mount minimum 24” above grade on wall per NEC

2. Float Switches
   a. Mercury-free, wide angle, corrosion resistant
   b. Minimum configuration: Pump On, Pump Off, High-Water Alarm
   c. Adjustable brackets or float tree for mounting
3. Alarm System
   a. Tank Alert EZ Duo or equivalent Wi-Fi enabled alarm programmable timer required
4. Installation and Testing
   a. All components wired per NEC and grounded; conduit penetrations sealed.
   b. Confirm functionality of pump cycle and high-water alarm prior to backfill.
   c. Provide laminated wiring diagram inside panel enclosure.
   d. Submit as-builts, float elevations, and O&M manual with record documentation

2.04 VENT PIPE

A. Description: Provide vertical vent pipe for septic system gas relief in accordance with TPCHD and local building codes.
B. Vent pipe shall include an odor filter that meets a combined minimum air flow of 4 cfm between each vent pipe.
C. Material: Schedule 40 PVC conforming to ASTM D1785 or equivalent, UV-resistant if exposed.
D. Diameter: 3 inches unless otherwise specified by the Drawings.
E. Installation:
   1. Extend a minimum of 12 inches above finished grade.
   2. Terminate with a screened cap to prevent debris and animal entry.
   3. Locate per Tacoma-Pierce County Health Department regulations to avoid nuisance odors and ensure proper dispersion.
F. Identification: Paint exposed pipe with green enamel or label per TPCHD standards.

2.05 SUPPORT MATERIALS

A. Per the plans, all support materials in wetwell and valve vault shall be type 316L stainless steel. All fasteners (nuts, bolts, anchors, washers, etc.) shall be type 316 or 316L stainless steel.

2.06 WETWELL

A. Per the plans, the wetwell will have an 84” diameter with 8” walls. Epoxy and wetwell preparation shall conform to WSDOT Section 9-26.3.
B. The wetwell access ladder shall be located per the plans. Ladder shall conform to Pierce County Sanitary Sewer Development Specifications Section 11.4.
   1. The ladder steps shall be offset from the wetwell wall such that the steps are parallel to the wetwell access hatch per the plans.

2.07 WETWELL ACCESS HATCH

A. Wetwell access hatch shall be a double door. The hatch shall have a pneumatic lift assisted doors with self-engaging safety bar and lift handles that retract and are flush with the doors when not in use. The doors shall have a non-slip surface finish and state “SEWER” on each of the doors. The hatch shall have an “EJ Safe hatch, Safety Access System” or approved equal for the open area. The hatch shall have an automatic lock on the close system or one that is flush to the surface. There shall be no protrusion above the hatch doors. The hatch shall have a vented lid with a capacity to pass 50 cfm of air without building vacuum.

2.08 VALVE VAULT

A. Vaults shall be manufactured in accordance with ASTM C913 and ASTM C858. All lifting and handling devices shall be cast into the structure. Installation shall be on 6” minimum compacted gravel or concrete pad. All joints must be sealed watertight. Structure must be level and plumb.
B. Oldcastle Valve Vault 675-LA Vault 5’6” x 7’ or equivalent approved by the Engineer.

2.09 CHECK VALVE

A. Shall be 3” and conform to ASTM D2466, ASTM D1785 and NSF/ANSI 14.

2.10 FLOW METER

A. Flow meter shall effectively track how much wastewater is leaving the wetwell and ensure the system is dosing the correct volume to the trash tanks. Meter shall support time-dose or demand-dose and be approved for use in on-site sewage systems regulated by TPCHD.
B. Electronics shall be CE and RoHS compliant.
C. Materials in contact with effluent shall meet NSF/ANSI 14 for use in wastewater applications.
D. Meter shall be integrable with control panel for alarm and data logging functionality.

2.11 GROUT

A. General Requirements
   1. Grout shall be a prepackaged, non-shrink, non-metallic, cementitious material suitable for vertical and overhead applications in wet environments.
   2. Grout shall be resistant to sulfates, chlorides, and microbial-induced corrosion commonly found in wastewater structures.
B. Packaging and Storage
   1. Deliver grout in original, unopened containers labeled with manufacturer’s name, batch number, and expiration date.
   2. Store in dry conditions off the ground and protect from moisture and extreme temperatures.
C. Apply ASTM C1107 complying grout as indicated in the plans.

2.12 GRAVITY SEWER PIPE AND FITTINGS

A. PVC pipe and fittings indicated on the plans shall conform to WSDOT Standard Specification Section 9-05.12(1)
B. Ductile iron pipe and fittings as indicated on the plans shall be pressure class 350 and lined with Protecto 401 ceramic epoxy.

2.13 PRESSURE SEWER PIPE AND FITTINGS

A. Pressure sewer pipe and fittings shall apply to the force main as indicated in the plans.
B. The force main shall be PVC pipe with ductile iron fittings. Pipe and fittings shall meet the requirements of AWWA C906.
C. Pressure pipe shall be approved by the Underwriter’s Laboratory (UL) or Factory Mutual (FM).
D. The outside diameter of the pipe shall be based on the Iron Pipe Size (IPS) sizing system.

2.14 TRENCH BEDDING AND BACKFILL MATERIAL

A. See Specification Section 31 23 33 “Trenching, Backfilling, and Compacting for Utilities”, and Specification Section 31 05 16 “Aggregates”.

2.15 PULL TAPE AND TRACER WIRE

A. Provide pull tape and tracer wire for all non-metallic pressure sewer force mains and service laterals to facilitate future location and conduit access. Materials and installation shall conform to WSDOT Standard Specifications Sections 7-09.3(18) and 9-29.5.

PART 3 EXECUTION

3.01 PRECONSTRUCTION

A. A preconstruction meeting shall be held with the City prior to commencing staking. All construction staking shall be inspected by the City prior to construction.

3.02 STAKING

A. All surveying and staking shall be performed by an engineering or surveying firm capable of performing such work. The engineer or surveyor directing such work shall be licensed as a Professional Engineer or Professional Land Surveyor by the State of Washington.
B. The minimum staking of sewer lines shall be as follows:
   1. Comply with the Pierce County Complete Accommodating Utilities Manual Section 4.2.2.8 Survey Control.
   2. Sanitary sewer structures will be staked from geometric center of structure with one stake offset each.

3.03 SEWER INSTALLATION

A. Sewer installation shall conform to Section 7-08.3 of the Standard Specification.
B. Trench Excavation
   1. Prior to any pavement cutting or removal, or excavation for pipe laying, the contractor shall verify in the presence of the City's inspector, the location and depth of the existing water mains at the points where connections are to be made. The contractor shall verify the dimensions, type, and condition of the existing water main. If necessary, the grade shall be adjusted so neither a high spot nor a low spot is created adjacent to the connection to the existing sewer mains.
   2. Trenches shall be excavated to the line and depth designated by the Plans. Except for unusual circumstances where approved by the City, the trench sides shall be excavated vertically and the trench width shall be excavated only to such widths as are necessary for adequate working space as allowed by the governing agency. The trench shall be kept free from water until joining is complete. Surface water shall be diverted so as not to enter the trench. The owner shall maintain sufficient pumping equipment on the job to ensure that these provisions are carried out.
   3. The Contractor shall perform all excavation of every description and whatever substance encountered and boulders, rocks, roots, and other obstructions shall be entirely removed or cut out to the widths of the trench and to a depth 6 inches below sewer main grade. Where materials are removed from below sewer main grade, the trench shall be backfilled to grade with pit run sand and gravel and thoroughly compacted.
   4. Trenching and shoring operations shall not proceed more than 100 feet in advance of pipe laying without approval of the City Engineer, and shall conform to Washington Industrial Safety and Health Administration (WISHA) and Office of Safety and Health Administration (OSHA) Safety Standard.
   5. The bottom of the trench shall be finished to grade with hand tools in such a manner that the pipe will have bearing along the entire length of the barrel. The bell holes shall be excavated with hand tools to sufficient size to make up the joint.

6. Material excavated from trenches and piled adjacent to the trench or in a roadway or public thoroughfare, shall be piled and maintained so that the toe of the slope of the material is at least 2 feet from the edge of the trench. It shall be piled in such a manner that will cause a minimum of inconvenience to public travel, and provisions shall be made for traffic contractor as necessary. Free access shall be provided to fire hydrants, water valves, and meters, and clearance shall be left to enable free flow of storm water in gutters, other conduits, and natural watercourses.
7. Trench widths for sanitary sewer installation shall be as shown on Contract Drawings.

C. Trench Shoring
1. Where trench excavation equals or exceeds a depth of 4 feet, the developer/contractor shall provide, construct, maintain and remove, as required, safety systems that meet the requirements of the Washington Industrial Safety and Health Act, RCW 49.17, including WAC 296-155. The trench safety systems shall be designed by a qualified person, and meet accepted engineering requirements (see WAC 296-155-660).
2. The Contractor shall adequately shore trenches to protect the work, existing property, utilities, pavement, etc., and to provide safe working conditions in the trench. The method of shoring shall be according to the contractor's design. The contractor may elect to use a combination of shoring or overbreak, tunneling, boring, sliding trench shields, or other methods of accomplishing the work, provided the method meets all applicable local, state, and federal safety codes. Damages resulting from improper cribbing or from failure to crib shall be the sole responsibility of the contractor.

D. Dewatering of Trench
1. Where water is encountered in the trench it shall be removed during pipe-laying operations and the trench so maintained until the ends of the pipe are sealed and provisions are made to prevent floating of the pipe. Trench water or other deleterious materials shall not be allowed to enter the pipe at any time.
2. The developer/contractor shall furnish, install, and operate all necessary equipment to keep the trench above the foundation level free from water during construction, and shall dewater and dispose of the water so as not to cause injury to public or private property or nuisance to the public. Sufficient pumping equipment in good working condition shall be available at all times for all emergencies, including power outage, and shall have available at all times competent workers for the operation of the pumping equipment.

E. Backfilling
1. Suitable native material excavated during trenching shall be used for trench backfill unless notified by the Engineer that the native material is unsuitable. The Engineer or his representative will examine excavated native material at the time of excavation to determine its suitability for use as backfill. Native material will be considered suitable for trench backfill if it is:
    a. Capable of attaining the degree of compaction specified within reasonable tolerance of optimum moisture content.
    b. Reasonably free of organic material, clay, frozen lumps, rocks, or other deleterious matter.
2. Unsuitable backfill material shall be removed from the site and hauled to an approved disposal site. The Engineer shall be provided with the location of all disposal sites to be used and also copies of the permits and approvals for such disposal sites.
3. During all phases of the backfilling operations and testing as outlined herein, the contractor shall protect the pipe installation, provide for the maintenance of traffic as may be necessary, and provide for the safety of property and persons.

3.04 TESTING

A. Air Test
   1. Prior to acceptance of the project, the gravity sewer pipe shall be subject to a low pressure air test per WSDOT Section 7-17.3(2). The Contractor shall furnish all equipment and personnel for conducting the test under the observation of the City inspector. The testing equipment shall be subject to the approval of the City.
   2. The Contractor shall make an air test for his own purposes prior to notify the City to witness the test. The acceptance air test shall be made after trench is backfilled and compacted and the roadway section is completed to subgrade.
   3. All wyes, tees, and end of side sewer stubs shall be plugged with flexible joint caps, or acceptable alternates, securely fastened to withstand the intern test pressures. Such plugs or caps shall be readily removable and their removal shall provide a socket suitable for making a flexible jointed lateral connection or extension. Immediately following the pipe cleaning, the pipe installation shall be tested with low-pressure air.

B. A mandrel test in accordance with Section 7-17.3(2) of the Standard Specifications shall be required on all sewer main lines.

PART 4 PAYMENT

A. Payment shall be full compensation for the entire scope of work within this section, including all operations necessary for the complete and proper installation of all components of the sanitary sewer to the satisfaction of the plan as well as the preparation, safety, and quality control measures.

END OF SECTION

SECTION 33 32 00
ON-SITE SEWAGE SYSTEM (OSS)

PART 1 GENERAL

1.01 SUMMARY

A. Install the on-site sewage system using the materials as shown in the Contract Drawings and/or as specified in the Specifications.

1.02 SCOPE OF WORK

A. Furnish all materials, equipment, labor and related items necessary to complete the work shown in the Contract Drawings and/or as specified in the Specifications. The work included in this section (whether mentioned or not) consists of all labor, tools, materials, tests, permits and other related items necessary for the construction of the on-site sewage system.

1.03 REFERENCES

A. This specification section incorporates by reference the latest revisions of the following documents.
   1. Pierce County Accommodating Utilities Manual
   2. Pierce County Environmental Health Code Chapter 2 On-Site Sewage
   3. Washington Administrative Code (WAC) 246-272A
   4. Washington Department of Health Recommended Standards and Guidance: Pressure Distribution Systems (Pressure RS&G).
   5. Washington State Department of Transportation (WSDOT) Standard Specifications for Road, Bridge, and Municipal Construction
   6. American Society of Testing and Materials (ASTM)
      a. ASTM C1227 – Precast Concrete Septic Tanks

B. In case of conflict between the requirements of this specification section and the Contract Drawings, the requirements of the contract specification section shall prevail.

1.04 RELATED WORK

A. Related work in other sections of these Specifications includes but is not limited to:
   1. Specification 33 30 00 – SANITARY SEWER

1.05 QUALITY ASSURANCE

A. Manufacturer and Installer Qualifications: Firms regularly engaged in manufacture or installation of on-site sewage system projects consisting of similar scope and materials.

B. General: Use adequate numbers of skilled workmen who are thoroughly trained and experienced in the necessary craft and who are completely familiar with the specified requirements and methods needed for proper performance of the work in this section.

C. Installer of the on-site sewage system shall be a licensed and registered contractor with the State of Washington, and a certified OSS installer under the Pierce County Health Department.

1.06 SUBMITTALS

A. Submit Manufacturer's Literature to the Engineer on proposed material prior to the start of any work, submit three copies of product information correlated to specified requirements.

B. No installation of the material concern shall be made until written approval has been obtained from the Engineer. Approval of materials and equipment shall in no way obviate compliance with the plans and specifications.
C. Owner's Manual: Recommended maintenance activities and frequency as detailed in these Specifications.
D. On Site Sewage Structure Verification Survey:
   1. Contractor shall submit to the Architect/Engineer an as-built survey, prepared by a Licensed Professional Surveyor, showing each sewer structure installed by the Contractor during construction. Submit the survey on paper stamped by a Licensed Professional Surveyor and in digital format (AutoCAD). The sewer structure verification survey shall include graphic horizontal location of the center of each structure (to the nearest tenth of a foot) relative to the property boundaries and right of ways (per the project survey) and the vertical elevations of all structure lids and pipe inverts to the nearest five hundredths of a foot. Clean-outs are excluded from survey requirements. Changes during construction to cleanout locations or elevations shall be noted on the Contractor's Record Drawing submittal.

PART 2 PRODUCTS

2.01 CONCRETE TANKS: SEPTIC, TRASH, AND PUMP

A. Furnish and install precast concrete sewage system tanks, e.g. septic, trash, and pump tanks. Refer to plans for locations and specific dimensions.
B. Provide a sediment shroud as indicated on the drawing around pumps.
C. All tanks shall comply with
   1. Tacoma-Pierce County Health Department (TPCHD) Standards
   2. Washington On-Site Sewage System Regulations (WAC 246-272A)
   3. Washington State Department of Health approved tanks list
D. Provide a minimum 24-inch diameter access riser with a gasketed, airtight lid to prevent odor escape. Lids shall be lockable and watertight.
E. Tanks shall include service access manholes and monitoring ports at both inlet and outlet ends.
F. Tanks shall be structurally sounds and watertight, constructed to withstand burial and groundwater conditions.
G. Tanks shall be plumbed for flow-equalization as shown on the drawings.
H. Materials
   1. Tank Structure: ASTM C1227 compliant precast concrete with minimum 4,000 psi compressive strength.
   2. Access Risers: Polypropene risers with watertight, lockable lids.
   3. Pipe Penetrations: Flexible rubber gaskets or boots for watertight seals.

2.02 CLEANOUTS

A. Cleanout pipe shall match the material and diameter of the adjacent force main or gravity sewer line (Schedule 40 PVC)
B. Cleanout assembly shall include:
   1. PVC wye or tee fitting
   2. 45-degree elbow
   3. Vertical riser to finished grade
   4. Threaded or slip cleanout adapter with cap
   5. 6-inch diameter box with round enclosure and lid.
      a. Oldcastle Carson Box or equivalent.
C. Materials:

1. Pipe and fittings: PVC Schedule 40 per ASTM D2665 (gravity)
2. PVC pressure-rated per AWWA C900 (force main)

D. Cleanout plug: Threaded PVC plug with square or slotted top

E. Installation requirements:
1. Install cleanouts at all changes in direction greater than 45 degrees, at terminal ends of sewer lines, and at 100-foot maximum intervals for gravity pipe runs, unless otherwise shown.
2. Set top of cleanout cap flush with grade in lawn areas and flush with paving surface in hardscape areas.
3. Provide concrete collar around cleanouts in paved or trafficked areas.
4. Mark cleanout locations on as-built drawings and record documentation.

2.03 EFFLUENT PUMPS

A. Provide a submersible effluent pump suitable for high-head applications in septic tank effluent pumping systems.
1. Liberty FL152A-2 or equivalent, compliant with TPCHD requirements.
2. Further instructions shall be detailed in the plans.

B. Pump shall be installed to allow removal from the surface without entering the chamber and equipped with the necessary unions, valves and electrical connections for removal and repair.

2.04 ON-SITE SEWAGE SYSTEM PUMP CONTROLS AND CONTROL PANEL

A. Provide a complete effluent pump control system for septic pump tanks, including submersible pump, mercury-free float switches, and a weatherproof control panel. The system shall ensure safe, code-compliant operation and alarm functionality in accordance with TPCHD and WAC 246-272A requirements.
1. Control panel requirements:
   a. UL 508A listed, NEMA 4X-rated enclosure (fiberglass or stainless steel)
   b. Components:
      1) Circuit breakers and motor contactor
      2) Hand-Off-Auto (HOA) switch
      3) Audible and visual high-water alarm
      4) Alarm silence/test/reset buttons
      5) Terminal strip and pump run indicator
      6) Programmable logic controller (PLC)
   c. Mount minimum 24” above grade on post or wall per NEC
2. Float Switches:
   a. Mercury-free, wide-angle, corrosion resistant
   b. Minimum configuration: Pump On, Pump Off, High-Water Alarm
   c. Adjustable brackets or float tree for mounting
3. Alarm System
   a. Tank Alert EZ Duo or equivalent Wi-Fi enabled alarm programmable timer required
4. Installation and Testing:
   a. All components wired per NEC and grounded; conduit penetrations sealed.
   b. Confirm functionality of pump cycle and high-water alarm prior to backfill.
   c. Provide laminated wiring diagram inside panel enclosure.
   d. Submit as-builts, float elevations, and O&M manual with record documentation

2.05 DISTRIBUTION BOX

A. The Distribution box shall be watertight, corrosion-resistant, and designed for underground installation in accordance with Tacoma-Pierce County Health Department (TPCHD) Environmental Health Code – Chapter 2: On-Site Sewage.
B. Distribution Box shall have three holes, one 3" diameter and two 4" diameter unless indicated otherwise on the plans. Distribution box shall be 12"x12" Square Polylok or equivalent product.
C. Casting shall be load rated as indicated on the drawings. If not indicated, load rating shall be HS-25, and shall be hinged and gasketed.

2.06 GEOTEXTILE FILTER FABRIC

A. Shall conform to Pressure RS&G Section 2.8.6.3.

2.07 EFFLUENT FILTER (BIOTUBE JUNIOR)

A. A biotube junior effluent filter shall be installed on the outlet of each septic tank to reduce suspended solids in the effluent and protect the downstream drainfield.
B. The filter shall be suitable for commercial use and compatible with Pierce County Environmental Health Code Chapter 2 On-Site Sewage.
C. Approved models:
    1. Acceptable filters include Orenco FT-Series Biotube Junior Effluent Filters or approved equal.
    2. Filters must be compatible with Schedule 40 PVC.
D. Filter Construction and Performance
    1. Filter cartridges shall be constructed of corrosion-proof polypropylene and polyethylene.
    2. Filter diameter shall be 4"; filter height shall be 18".
    3. Filter mesh shall be either 1/8" or 1/16", selected based on site-specific needs.
    4. Filter shall remove approximately two-thirds of suspended solids from septic tank effluent.
    5. Filter shall include an extendable PVC handle and a vented top plate for easy maintenance access.
E. Installation Requirements
    1. Filter shall be installed per manufacturer's instructions and securely seated in the outlet tee.
    2. Vault and cartridge height shall be selected to match tank dimensions and liquid level.
    3. The filter must be accessible for inspection and maintenance without excavation.
F. Maintenance and Inspection
    1. The effluent filter shall be inspected and cleaned at intervals recommended by the manufacturer or as required by Tacoma-Pierce County Health Department.
    2. Maintenance logs shall be retained by the property owner and made available upon request.

PART 3 EXECUTION

3.01 PRECONSTRUCTION

A. A preconstruction meeting shall be held with the Engineer and County prior to commencing staking. All construction staking shall be inspected by the County prior to construction.
B. All system components must be installed by a certified installer.
C. Installer shall contact Engineer to release the permit
D. Installer shall pick up permit and post on site
E. Tree removal and ground preparation shall be completed prior to construction. See Section 31 10 00 – Site Clearing.

3.02 CONSTRUCTION

A. Excavation, bedding, and backfill shall conform to the requirements of Section 31 23 33 Trenching and backfilling.
B. Before lowering into the trench, the pipe and structures shall be inspected for defects.
C. Structures and pipes shall be laid accurately to the staked line and grade.
D. Structures and pipe shall be cleaned of all foreign matter, and water shall be kept out of trenches until joints having been completed.
E. Each joint and structure penetrations shall be inspected to ensure that it is properly made before backfilling is done.

3.03 INSPECTION AND STARTUP

A. Upon system completion installer is to notify the Engineer for inspection prior to backfill.
B. The Engineer will inspect the system for compliance. If the system meets all requirements, the Engineer will mark the posted permit "approved" and notify Tacoma Pierce County Health Department (TPCHD) for final inspection.
    1. The installer shall provide a startup of the system to ensure the system is operating properly and make any necessary adjustments as required.
C. If any deficiencies are noted, they must be corrected before installation is approved.
D. After the required three business days of notifying TPCHD for final inspection, the system will be backfilled by the installer.

3.04 POST CONSTRUCTION

A. The installer shall prepare and submit specific documentation to the Designer/Engineer with the following information:
    1. Copy of a signed permit.
    2. A backfill verification form.
    3. Recommended: A signed maintenance agreement with a certified Operations and Maintenance (O&M) provider.
B. The installer shall meet all post-construction requirements described in the TPCHD Environmental Health Code Chapter 2 pertaining to record drawings (as-builts).
C. The installer shall prepare and submit User's Manual to Property Owner with the following information:
    1. Diagrams of the system components,
    2. Explanation of general system function, operations expectations, owner responsibility, etc.,
    3. Specifications of all electrical and mechanical components installed (occasionally components other than those specified on the plans are used),
    4. Names and telephone numbers of the system designer, local health jurisdiction, component manufacturers, supplier/installer, and/or the management entity to be contacted in the event of failure,
    5. Information on the periodic maintenance requirements of the various components of the on-site sewage system, and
    6. Information on "trouble-shooting" common operational problems that might occur.

3.05 MONITORING

A. The installer shall perform a 6-month system inspection and prepare a summary report with the following information:
    1. Evaluate Drainfield
        a. The installer shall perform a 6-month system inspection and prepare a summary report with the following information:

b. Evaluate Drainfield

2. Evaluate Laterals
   a. For residual pressure at the distal ends. Confirms that it is the same as those recorded on the construction record. If not the same, laterals and orifices need to be cleaned.
   b. For equal flows in each lateral.
   c. Clean laterals and orifices as necessary.
3. Measure Pump Run Time per Cycle and Drawdown
   a. Compare these values with those recorded in the construction record. If not the same, evaluate the system for improperly set timer control, float switches, clogged laterals, and plugged orifices.
4. Test Alarms
   a. Test alarms for proper functioning (high and low liquid level).
5. Evaluate Septic Tanks and Pump Tanks
   a. For sludge and scum accumulations; pump when the sludge and scum thickness total 1/3 of the depth of the tank.
   b. For clogging, damage, and proper placement of outlet baffle screen. Clean each time it is inspected or as needed to avoid clogging.
   c. For signs of leaking in tanks and risers. Repair of replace if necessary.
   d. For riser and lids being above grade and having lids that are secure.
   e. For properly functioning of floats. Movement should not be restricted. Floats should be positioned correctly and provide positive instrumental signals. Adjust and repair as necessary.

B. All findings shall be provided in the final report along with any necessary repairs. Provide a copy of report to TPCHD.

PART 4 PAYMENT

A. Payment shall compensate for the entire scope of work within this section, including all operations necessary for the complete installation of all on-site sewage system components to the satisfaction of the plans as well as the preparation, safety, and quality control measures.

END OF SECTION

REGION NO.	STATE	FEDERAL AID PROJECT NO.	SHEET NO.	TOTAL SHEETS
10	WA	*N/A*		

811 Know what's below. Call before you dig.

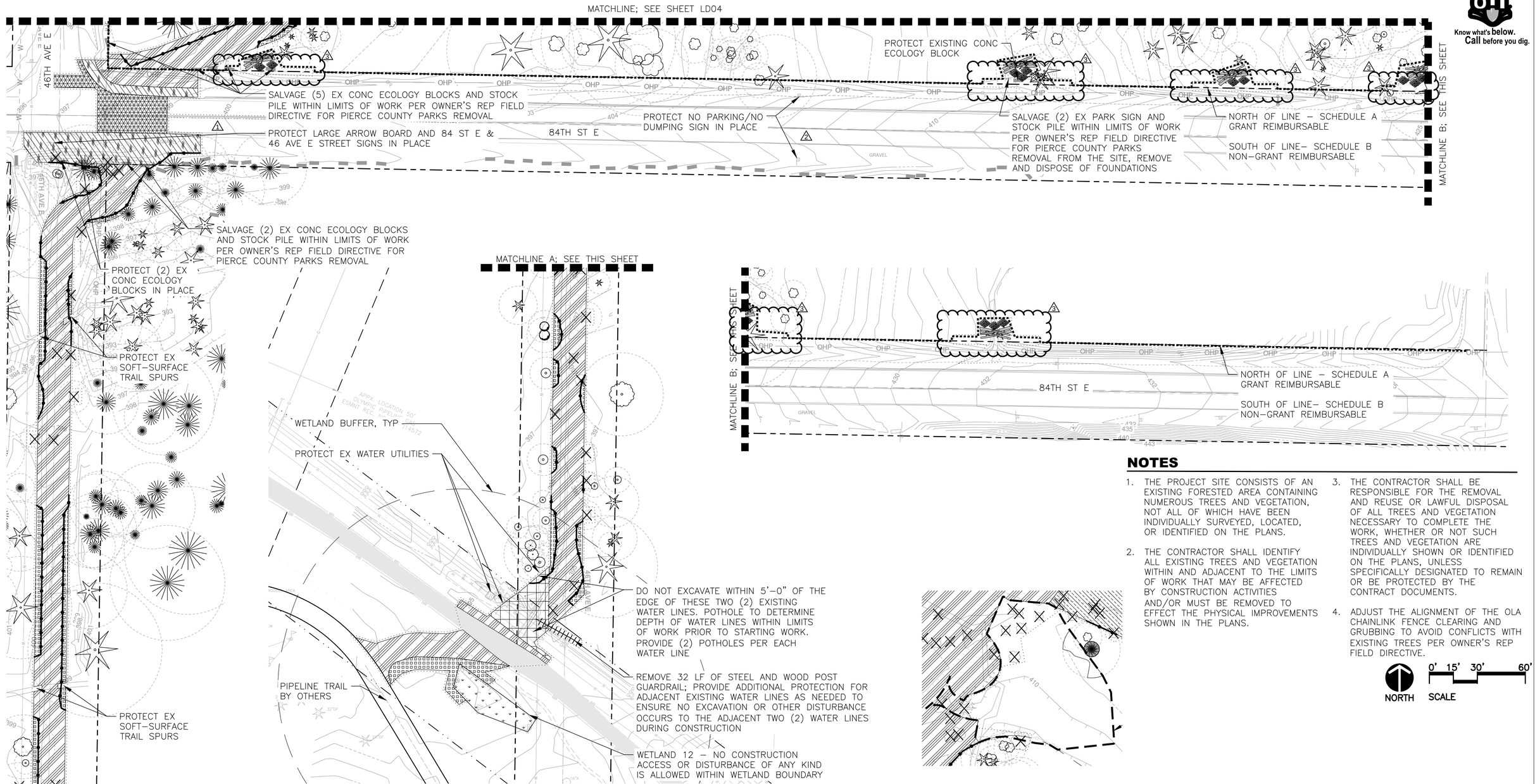

NOTES

1. THE PROJECT SITE CONSISTS OF AN EXISTING FORESTED AREA CONTAINING NUMEROUS TREES AND VEGETATION, NOT ALL OF WHICH HAVE BEEN INDIVIDUALLY SURVEYED, LOCATED, OR IDENTIFIED ON THE PLANS.
2. THE CONTRACTOR SHALL IDENTIFY ALL EXISTING TREES AND VEGETATION WITHIN AND ADJACENT TO THE LIMITS OF WORK THAT MAY BE AFFECTED BY CONSTRUCTION ACTIVITIES AND/OR MUST BE REMOVED TO EFFECT THE PHYSICAL IMPROVEMENTS SHOWN IN THE PLANS.
3. THE CONTRACTOR SHALL BE RESPONSIBLE FOR THE REMOVAL AND REUSE OR LAWFUL DISPOSAL OF ALL TREES AND VEGETATION NECESSARY TO COMPLETE THE WORK, WHETHER OR NOT SUCH TREES AND VEGETATION ARE INDIVIDUALLY SHOWN OR IDENTIFIED ON THE PLANS, UNLESS SPECIFICALLY DESIGNATED TO REMAIN OR BE PROTECTED BY THE CONTRACT DOCUMENTS.
4. ADJUST THE ALIGNMENT OF THE OLA CHAINLINK FENCE CLEARING AND GRUBBING TO AVOID CONFLICTS WITH EXISTING TREES PER OWNER'S REP FIELD DIRECTIVE.

NORTH

SCALE 0' 15' 30' 60'

1 PICNIC SHELTER 1 AREA: BASE BID

SCALE: 1"=30'-0"

HBB LANDSCAPE ARCHITECTURE

DESIGNED BY: D. KOONTS	SURVEYED BY:
DRAWN BY: J. BAKKE	DATE SURVEYED:
CHECKED BY: J. VONG	DATE PLOTTED: October 20, 2026

STATE OF WASHINGTON · MERIT OVIR · 10/22/2026 · NO. 1396 EXP. 03/2017 · LICENSED LANDSCAPE ARCHITECT

NO.	DATE	REVISION	BY	APPROVED
3	10/22/2026	ADDENDUM 4	JB	DWK
2	10/16/2026	ADDENDUM 2	JB	DWK
1	10/09/2026	ADDENDUM 1	JB	DWK

Pierce County
Parks and Recreation Services
Lakewood Community Center
9112 Lakewood Drive SW
Lakewood, WA 98499
253.798.4081

BID SET

LD05

ORANGEGATE PARK
PHASE 1 IMPROVEMENTS

DEMOLITION AND CLEARING PLANS

P-111031

Drawing: P:\2022 PROJECTS\2022-33C ORANGEGATE PARK - PHASE 1 IMPROVEMENTS\GRAPHICS\AUTOCAD\L-DEMO-PLOT.DWG Layout Tab: LD05
Xrefs: PC PARKS TITLEBLOCK.DWG / X-BASE.DWG / X-SITE-FURN.DWG / X-DEMO.DWG / TREE AND VEGETATION PROTECTION.DWG / ACAD-23014_BP_BY OTHERS_PIPELINE2-MODEL.DWG / X-SURVEY.DWG / RLE STAMP.DWG / 23014_BP_COMP TOPO.DWG / V19547-SRV.DWG
Date: 10/20/2026 Time: 09:42:42 PM Plotted by: JBAKKE

REGION NO.	STATE	FEDERAL AID PROJECT NO.	SHEET NO.	TOTAL SHEETS
10	WA	*N/A*		

811 Know what's below. Call before you dig.

GENERAL NOTES (STREET CONSTRUCTION)

1. ALL WORKMANSHIP AND MATERIALS SHALL BE IN ACCORDANCE WITH THE PIERCE COUNTY STANDARDS AND THE MOST CURRENT COPY OF THE WSDOT/APWA STANDARD SPECIFICATIONS FOR ROAD, BRIDGE, AND MUNICIPAL CONSTRUCTION; IN CASES OF CONFLICT, THE MOST STRINGENT STANDARD SHALL APPLY.
2. THE CONTRACTOR SHALL BE IN COMPLIANCE WITH ALL SAFETY STANDARDS AND REQUIREMENTS AS SET FORTH BY OSHA, WISHA AND THE WASHINGTON STATE DEPARTMENT OF LABOR AND INDUSTRIES.
3. THE CONTRACTOR SHALL BE RESPONSIBLE FOR ALL TRAFFIC CONTROL IN ACCORDANCE WITH THE WSDOT/APWA STANDARD PLANS FOR ROAD, BRIDGE AND MUNICIPAL CONSTRUCTION (ALL APPLICABLE "K" PLANS) AND/OR THE MANUAL ON UNIFORM TRAFFIC CONTROL DEVICES (MUTCD). PRIOR TO DISRUPTION OF ANY TRAFFIC, A TRAFFIC CONTROL PLAN SHALL BE PREPARED AND SUBMITTED TO THE COUNTY FOR APPROVAL. NO WORK SHALL COMMENCE UNTIL ALL APPROVED TRAFFIC CONTROL IS IN PLACE.
4. ALL APPROVALS AND PERMITS REQUIRED BY PIERCE COUNTY SHALL BE OBTAINED BY THE CONTRACTOR PRIOR TO THE START OF CONSTRUCTION.
5. IF CONSTRUCTION IS TO TAKE PLACE IN OTHER JURISDICTION'S RIGHT-OF-WAY (I.E., THE COUNTY, THE STATE, THE CITY OF SUMMIT, OR OTHER ADJACENT MUNICIPALITIES), THE CONTRACTOR SHALL NOTIFY THE JURISDICTION AND OBTAIN ALL THE REQUIRED APPROVALS AND PERMITS.
6. A PRE-CONSTRUCTION MEETING SHALL BE HELD WITH THE PIERCE COUNTY CONSTRUCTION INSPECTOR A MINIMUM OF 72 HOURS PRIOR TO THE START OF CONSTRUCTION.
7. THE CONTRACTOR SHALL BE FULLY RESPONSIBLE FOR THE LOCATION AND PROTECTION OF ALL EXISTING UTILITIES. THE CONTRACTOR SHALL VERIFY ALL UTILITY LOCATIONS PRIOR TO CONSTRUCTION BY CALLING THE UNDERGROUND LOCATE LINE AT 1-800-424-5555 A MINIMUM OF 48 HOURS PRIOR TO ANY EXCAVATION.
8. IT SHALL BE THE RESPONSIBILITY OF THE CONTRACTOR TO HAVE A COPY OF AN APPROVED SET OF PLANS ON THE CONSTRUCTION SITE AT ALL TIMES.
9. ALL SURVEYING AND STAKING SHALL BE PERFORMED PER THE CORRESPONDING CHAPTER OF THE LATEST WSDOT DESIGN MANUAL.
10. TEMPORARY EROSION CONTROL/WATER POLLUTION PREVENTION MEASURES SHALL BE REQUIRED IN ACCORDANCE WITH SECTION 1-07.15 OF THE WSDOT/APWA STANDARD SPECIFICATIONS FOR ROAD, BRIDGE AND MUNICIPAL CONSTRUCTION AND THE DRAINAGE DESIGN AND EROSION CONTROL MANUAL FOR PIERCE COUNTY. AT NO TIME, WILL SILTS AND DEBRIS BE ALLOWED TO DRAIN INTO THE NEWLY INSTALLED STORM TREATMENT FACILITIES AND DETENTION FACILITY.
11. WHERE NEW ASPHALT JOINS EXISTING, THE EXISTING ASPHALT SHALL BE CUT OUT TO A NEAT VERTICAL EDGE AND TACKED WITH ASPHALT EMULSION TYPE FOR CRACK AND JOINT SEALING IN ACCORDANCE WITH SECTION 5-03 OF THE WSDOT/APWA STANDARD SPECIFICATIONS, THE NEW ASPHALT SHALL BE FEATHERED BACK OVER EXISTING TO PROVIDE FOR A SEAL AT THE SAWCUT LOCATION AND THE JOINT SEALED WITH GRADE AR-4000W ASPHALT.
12. COMPACTION OF SUBGRADE, ROCK, AND ASPHALT SHALL BE IN ACCORDANCE WITH THE MOST CURRENT ADOPTED VERSION OF THE WSDOT/APWA STANDARD SPECIFICATIONS FOR ROAD, BRIDGE AND MUNICIPAL CONSTRUCTION.
13. FORM AND SUBGRADE INSPECTION BY THE COUNTY IS REQUIRED BEFORE POURING CONCRETE. TWENTY-FOUR HOUR'S NOTICE IS REQUIRED FOR FORM INSPECTION.
14. SEE CONTRACT SPECIFICATIONS, SECTION 01 56 00 TEMPORARY BARRIER AND ENCLOSURES, FOR TESTING AND SAMPLING FREQUENCIES..
15. SEE CONTRACT SPECIFICATIONS, SECTION 10 14 53 TRAFFIC SIGNAGE AND 32 17 00 PAVING SPECIALTIES FOR SIGNING AND STRIPING REQUIREMENTS.

PIERCE COUNTY STANDARD STORMWATER NOTES:

1. ALL WORKMANSHIP AND MATERIALS SHALL BE IN ACCORDANCE WITH COUNTY STANDARDS AND THE MOST CURRENT COPY OF THE STATE OF WASHINGTON STANDARD SPECIFICATIONS FOR ROAD, BRIDGE, AND MUNICIPAL CONSTRUCTION (WSDOT/APWA) AND AS AMENDED BY THE COUNTY OR THE STATE.
2. TEMPORARY EROSION/WATER POLLUTION PREVENTION MEASURES SHALL BE REQUIRED IN ACCORDANCE WITH THE PIERCE COUNTY STORMWATER MANAGEMENT MANUAL AND THE DEPT. OF ECOLOGY'S CONSTRUCTION STORMWATER GENERAL PERMIT.

   SHOULD THE TEMPORARY EROSION AND SEDIMENTATION CONTROL MEASURES AS SHOWN ON THIS DRAWING NOT PROVE ADEQUATE TO CONTROL EROSION AND SEDIMENTATION, THE APPLICANT/CONTRACTOR SHALL INSTALL ADDITIONAL FACILITIES AS NECESSARY TO PROTECT ADJACENT PROPERTIES, SENSITIVE AREAS, NATURAL WATER COURSES, AND/OR STORM DRAINAGE SYSTEMS.
3. CALL THE UNDERGROUND LOCATE LINE 1-800-424-5555 A MINIMUM OF 48 HOURS PRIOR TO ANY EXCAVATIONS.
4. THE STORM DRAINAGE SYSTEMS SHALL BE CONSTRUCTED ACCORDING TO APPROVED PLANS ON FILE WITH THE COUNTY. ANY SIGNIFICANT DEVIATION FROM THE APPROVED PLANS WILL REQUIRE WRITTEN APPROVAL FROM THE COUNTY.
5. A COPY OF THE APPROVED CONSTRUCTION STORMWATER POLLUTION PREVENTION PLAN AND STORMWATER PLANS MUST BE ON THE JOB SITE WHENEVER CONSTRUCTION IS IN PROGRESS.
6. ALL EROSION CONTROL AND STORMWATER FACILITIES SHALL BE REGULARLY INSPECTED AND MAINTAINED BY THE DESIGNATED CERTIFIED EROSION AND SEDIMENT CONTROL LEAD (CESCLE) DURING CONSTRUCTION.
7. IT SHALL BE THE SOLE RESPONSIBILITY OF THE CONTRACTOR TO OBTAIN STREET USE AND OTHER RELATED OR REQUIRED PERMITS PRIOR TO ANY CONSTRUCTION ACTIVITY IN THE MUNICIPALITY'S RIGHT-OF-WAY. IT SHALL ALSO BE THE RESPONSIBILITY OF THE CONTRACTOR TO OBTAIN ALL REQUIRED PERMITS PRIOR TO ANY CONSTRUCTION. THE CONTRACTOR SHALL ABIDE BY ALL REQUIREMENTS FOR TRAFFIC CONTROL & SAFETY WHEN WORKING IN THE ROAD RIGHT-OF-WAY.
8. THE CONTRACTOR SHALL NOTIFY THE PROJECT ENGINEER IN THE EVENT OR DISCOVERY OF POOR SOILS, STANDING GROUNDWATER, OR SEVERE DISCREPANCIES FROM SOIL LOG DESCRIPTIONS AS NOTED ON THE PLANS.
9. FOR PUBLIC SYSTEMS, THE CONTRACTOR SHALL CALL FOR INSPECTION 48 HOURS PRIOR TO COVERING ANY DRAINAGE STRUCTURE.
10. ALL DRAINAGE STRUCTURES, SUCH AS CATCH BASINS AND MANHOLES, NOT LOCATED WITHIN A TRAVELED ROADWAY OR SIDEWALK, SHALL HAVE SOLID LOCKING LIDS. ALL DRAINAGE STRUCTURES ASSOCIATED WITH A PERMANENT RETENTION/DETENTION FACILITY SHALL HAVE SOLID LOCKING LIDS.

CONSTRUCTION REQUIREMENTS

1. ALL BMP NUMBERS CORRESPOND TO THE DEPARTMENT OF ECOLOGY STORMWATER MANAGEMENT MANUAL FOR WESTERN WASHINGTON AND SHALL BE INSTALLED, MAINTAINED, AND REMOVED IN ACCORDANCE WITH SAID MANUAL.
2. CONTRACTOR SHALL INSTALL STABILIZED CONSTRUCTION ENTRANCES AT ACCESS POINTS TO THE WORK AREAS OR AS DIRECTED BY THE ENGINEER.
3. STOCKPILE LOCATIONS SHALL BE AS DETERMINED BY THE CONTRACTOR.
4. CONTRACTOR SHALL MAINTAIN MATERIALS ON-SITE IN AN AREA EASILY ACCESSIBLE.
5. SAMPLING LOCATIONS TO BE FIELD LOCATED BY CERTIFIED EROSION AND SEDIMENT CONTROL LEAD.
6. ALL EROSION CONTROL MEASURES SHALL BE INSTALLED PRIOR TO ANY DEMOLITION.
7. STORM DRAIN INLET PROTECTION SHALL BE INSTALLED WITH INSTALLATION OF ALL PROPOSED CATCH BASINS.
8. ALL TREE PROTECTION AREAS SHALL HAVE PROTECTIVE BARRIER FENCES ERECTED AT DIRECTION OF PIERCE COUNTY PROFESSIONAL FORESTER. THE FENCES SHALL BE MADE OF ORANGE MESH PLASTIC AND SUPPORTED BY AT LEAST 5/8THS REBAR, OR APPROVED EQUAL, SPACED A MAXIMUM 10-FEET APART.
9. UNLESS OTHERWISE SPECIFIED, REMOVAL OF TREES SHALL INCLUDE THE REMOVAL OF STUMPS AND BACKFILLING THE VOIDS LEFT BY THE REMOVAL OPERATION WITH ONSITE NATIVE SOILS.

STANDARD NOTES FOR CONSTRUCTION STORMWATER POLLUTION PREVENTION PLAN FROM STORMWATER & SITE DEVELOPMENT MANUAL

1. APPROVAL OF THIS CONSTRUCTION SWPPP DOES NOT CONSTITUTE AN APPROVAL OF PERMANENT ROAD OR DRAINAGE DESIGN (E.G., SIZE AND LOCATION OF ROADS, PIPES, RESTRICTORS, CHANNELS, RETENTION/DETENTION/INFILTRATION FACILITIES, UTILITIES, ETC.)
2. THE IMPLEMENTATION OF THIS CONSTRUCTION SWPPP AND THE CONSTRUCTION, MAINTENANCE, REPLACEMENT, AND UPGRADING OF THESE CONSTRUCTION SWPPP FACILITIES IS THE REPSONSIBILITY OF THE APPLICANT/CONTRACTOR UNTIL ALL CONSTRUCITON IS COMPLETED AND APPROVED AND VEGETATION/LANDSCAPING IS ESTABLISHED.
3. THE BOUNDARIES OF THE CLEARING LIMITS SHOWN ON THIS PLAN SHALL BE CLEARLY FLAGGED IN THE FIELD PRIOR TO CONSTRUCTION. DURING THE CONSTRUCTION PERIOD, NO DISTURBANCE BEYOND THE FLAGGED CLEARING LIMITS SHALL BE PERMITTED. THE FLAGGING SHALL BE MAINTAINED BY THE APPLICANT/CONTRACTOR FOR THE DURATION OF CONSTRUCTION.
4. THE CONSTRUCTION SWPPP FACILITIES SHOWN ON THIS PLAN MUST BE CONSTRUCTED IN CONJUNCTION WILL ALL CLEARING AND GRADING ACTIVITIES, AND IN SUCH A MANNER AS TO ENSURE THAT SEDIMENT AND SEDIMENT LADEN WATER DO NOT ENTER THE DRAINAGE SYSTEM, ROADWAYS, OR VIOLATE APPLICABLE WATER STANDARDS.
5. THE CONSTRUCTION FACILITIES SHOWN ON THIS PLAN ARE THE MINIMUM REQUIREMENTS FOR ANTICIPATED SITE CONDITIONS. DURING THE CONSTRUCTION PERIOD, THESE CONSTRUCTION SWPPP FACILITIES SHALL BE UPGRADED AS NEEDED FOR UNEXPECTED STORM EVENTS AND TO ENSURE THAT SEDIMENT AND SEDIMENT LADEN WATER DO NOT LEAVE THE SITE.
6. THE CONSTRUCTION SWPPP FACILITIES SHALL BE INSPECTED DAILY BY THE APPLICANT/CONTRACTOR AND MAINTAINED AS NECESARY TO ENSURE THEIR CONTINUED FUNCTIONING.
7. THE CONSTRUCTION SWPPP FACILITIES ON INACTIVE SITES SHALL BE INSPECTED AND MAINTAINED A MINIMUM OF ONCE A MONTH OR WITHIN 48 HOURS FOLLOWING A MAJOR STORM EVENT.
8. AT NO TIME SHALL MORE THAN 1-FOOT OF SEDIMENT BE ALLOWED TO ACCUMULATE WITHIN A TRAPPED CATCH BASIN. ALL CATCH BASINS AND CONVEYANCE LINES SHALL BE CLEANED PRIOR TO PAVING. THE CLEANING OPERATION SHALL NOT FLUSH SEDIMENT LADEN WATER INTO THE DOWNSTREAM SYSTEM.
9. STABILIZED CONSTRUCTION ENTRANCES SHALL BE INSTALLED AT THE BEGINNING OF CONSTRUCTION AND MAINTAINED FOR THE DURATION OF THE PROJECT. ADDITIONAL MEASURES MAY BE REQUIRED TO ENSURE THAT ALL PAVED AREAS ARE KEPT CLEAN FOR THE DURATION OF THE PROJECT.

TESC LEGEND

- LIMITS OF WORK
- SF — SILT FENCE
- SW — STRAW WATTLES
- EDGE OF LANE
- OHP — OVERHEAD POWER
- UPH — UNDERGROUND PHONE
- TEMPORARY PROTECTION FENCE, SEE LD01
- C — CUT
- F — FILL

1 2 3

DAVID SYEN'S PE SEAL APPLIES ONLY TO ADDENDUM 1, 2, AND 4 REVISIONS CONTAINED IN SECTIONS CE, CG, CD, CP, SN, CW AND PLAN SHEETS.

10/20/2026

Drawing: C:\BM\SKILLINGS-PW-01\TRISTAN ROBERTSON\DMS12837\23014_PS_NT.DWG Layout Tab: 23014_DE_EC_NOTES
Xrefs: PC PARKS TITLEBLOCK.DWG / 23014_TESC CONTAINER.DWG / 23014_BP_EC.DWG / X-DEMO.DWG
Date: 10/21/2026 Time: 08:32:52 AM Plotted by: TRISTANROBERTSON

SKILLINGS

DESIGNED BY:	SURVEYED BY:
S. MOLAMPHY	R. EDWARDS
DRAWN BY:	DATE SURVEYED:
S. MOLAMPHY	October 21, 2026
CHECKED BY:	DATE PLOTTED:
T. SKILLINGS	Oct 21, 2026

THOMAS E. SKILLINGS — STATE OF WASHINGTON — 17952 — REGISTERED PROFESSIONAL ENGINEER — 10/21/2026

NO.	DATE	REVISION	BY	APPROVED
3	10/22/26	ADDENDUM 4		
2	10/15/26	ADDENDUM 2		
1	10/09/26	ADDENDUM 1		

Pierce County
Parks and Recreation Services
Lakewood Community Center
9112 Lakewood Drive SW
Lakewood, WA 98499
253.798.4081

BID SET

CE01

ORANGEGATE PARK
PHASE 1 IMPROVEMENTS

TEMPORARY EROSION AND SEDIMENT CONTROL NOTES

P-111031

REGION NO.	STATE	FEDERAL AID PROJECT NO.	SHEET NO.	TOTAL SHEETS
10	WA	*N/A*		

811 Know what's **below.** **Call** before you dig.

STRUCTURE TABLE

STRUCTURE NAME:	STA	NORTHING EASTING	DETAILS:	PIPES IN:	PIPES OUT	STRUCTURE KEY NOTES
CB-21 TYPE 1	A 111+44.45, 0.00'	N: 679558.66 E: 1176284.09	CATCH BASIN TYPE 1 WITH HERRINGBONE GRATE RIM = 402.94 SUMP: 399.87	12 IN. N-12 PIPE INV IN=400.84	12 IN. N-12 PIPE INV OUT=400.84	1 5 12
CB-22 TYPE 2	A 101+86.19, 76.58' LT	N: 679592.62 E: 1176202.61	CATCH BASIN TYPE 2 48 IN. WITH BEEHIVE GRATE RIM = 398.79 SUMP: 390.79		12 IN. N-12 PIPE INV OUT=392.79	2 6 7 12
CB-23 TYPE 1	A 107+98.22, 10.47' RT	N: 679793.57 E: 1176531.45	CATCH BASIN TYPE 1 WITH HERRINGBONE GRATE RIM = 403.02 SUMP: 398.74		12 IN. N-12 PIPE INV OUT=400.74	1 5 12
CB-24 TYPE 1	A 108+55.94, 0.00'	N: 679749.34 E: 1176492.93	CATCH BASIN TYPE 1 WITH HERRINGBONE GRATE RIM = 401.66 SUMP: 397.57	12 IN. N-12 PIPE INV IN=399.57	12 IN. N-12 PIPE INV OUT=399.57	1 5 12
CB-25 TYPE 1	A 109+38.79, 0.00'	N: 679697.57 E: 1176428.24	CATCH BASIN TYPE 1 WITH HERRINGBONE GRATE RIM = 400.39 SUMP: 395.91	12 IN. N-12 PIPE INV IN=397.91	12 IN. N-12 PIPE INV OUT=397.91	1 5 12
CB-26 TYPE 1	A 110+35.94, 0.00' RT	N: 679636.87 E: 1176352.39	CATCH BASIN TYPE 1 WITH HERRINGBONE GRATE RIM = 401.82 SUMP: 395.43	12 IN. N-12 PIPE INV IN=397.43	12 IN. N-12 PIPE INV OUT=397.43	1 5 12
CB-27 TYPE 2	A 110+96.55, 9.27' RT	N: 679606.24 E: 1176299.28	CATCH BASIN TYPE 2 48 IN. WITH HERRINGBONE GRATE RIM = 403.07 SUMP: 395.12	12 IN. N-12 PIPE INV IN=397.12	12 IN. N-12 PIPE INV OUT=397.12	2 5 12
CB-28 TYPE 2	A 111+09.05, 102.33' RT	N: 679663.85 E: 1176223.55	CATCH BASIN TYPE 2 48 IN. WITH BEEHIVE GRATE RIM = 396.06 SUMP: 388.06		12 IN. N-12 PIPE INV OUT=390.06	2 6 7 12
CB-29 DRAIN BASIN	A 101+57.66, 10.27' LT	N: 679526.89 E: 1176172.74	NYLOPLAST 18 IN. DRAIN BASIN WITH HERRINGBONE GRATE RIM = 395.80 SUMP: 392.04		12 IN. N-12 PIPE INV OUT=394.04	5 12 13 14
CB-30 TYPE 2	A 101+69.98, 42.14' LT	N: 679558.51 E: 1176185.71	CATCH BASIN TYPE 2 48 IN. WITH BEEHIVE GRATE RIM = 394.93 SUMP: 388.14		12 IN. N-12 PIPE INV OUT=390.14	2 6 7 12
CB-31 TYPE 1	A 100+46.96, 17.11' LT	N: 679535.98 E: 1176062.20	CATCH BASIN TYPE 1 WITH VANED GRATE RIM = 391.30 SUMP: 387.78	3	12 IN. N-12 PIPE INV OUT=389.78	1 5 12
CB-32 TYPE 2	A 100+95.79, 35.20' LT	N: 679553.07 E: 1176111.39	CATCH BASIN TYPE 2 48 IN. WITH BEEHIVE GRATE RIM = 390.60 SUMP: 385.25		12 IN. N-12 PIPE INV OUT=387.25	2 6 7 12
CB-33 TYPE 2	A 101+13.70, 70.04' LT	N: 679587.55 E: 1176130.00	CATCH BASIN TYPE 2 60 IN. WITH CONTROL STRUCTURE RIM = 393.44 SUMP: 382.50	12 IN. N-12 PIPE INV IN=386.50 12 IN. N-12 PIPE INV IN=390.00	12 IN. N-12 PIPE INV OUT=386.50	2 4 9
CB-34 TYPE 2	A 100+61.66, 75.92' LT	N: 679594.48 E: 1176078.09	CATCH BASIN TYPE 2 48 IN. WITH SOLID LID RIM = 390.58 SUMP: 382.25	12 IN. N-12 PIPE INV IN=384.25	12 IN. N-12 PIPE INV OUT=384.25	2 4
CB-35 TYPE 2	A 100+60.99, 225.92' LT	N: 679744.46 E: 1176080.46	CATCH BASIN TYPE 2 48 IN. SOLID LID WITH SOLID LID RIM = 388.23 SUMP: 379.40	12 IN. N-12 PIPE INV IN=381.40	12 IN. N-12 PIPE INV OUT=381.40	2 4
CB-36 TYPE 2	A 110+42.76, 421.21' RT	N: 679961.48 E: 1176083.89	CATCH BASIN TYPE 2 48 IN. WITH SOLID LID RIM = 384.66 SUMP: 378.31	12 IN. N-12 PIPE INV IN=380.31	12 IN. N-12 PIPE INV OUT=380.31	2 4
CB-37 TYPE 2	A 109+33.05, 553.95' RT	N: 680133.66 E: 1176086.61	CATCH BASIN TYPE 2 48 IN. WITH SOLID LID RIM = 383.16 SUMP: 377.45	12 IN. N-12 PIPE INV IN=379.45	12 IN. N-12 PIPE INV OUT=379.45	2 4
CB-38 TYPE 2	A 109+87.49, 598.94' RT	N: 680134.78 E: 1176015.99	CATCH BASIN TYPE 2 60 IN. WITH BEEHIVE GRATE RIM = 384.16 SUMP: 377.10	12 IN. N-12 PIPE INV IN=379.10 EX. CONC. PIPE INV IN=379.10 EX. CONC. PIPE INV IN=379.10	EX. CONC. PIPE INV OUT=379.10	2 6 7 12

2

1

X STORMWATER NOTES

1. TYPE 1 CATCH BASIN, SEE DETAIL 1, SHEET CD28
2. TYPE 2 CATCH BASIN, SEE DETAIL 2, SHEET CD28
3. RECTANGULAR SOLID METAL LID, SEE DETAIL 3, SHEET CD29
4. CIRCULAR FRAME AND COVER, SEE DETAIL 4, SHEET CD30
5. RECTANGULAR HERRINGBONE GRATE, SEE DETAIL 5, SHEET CD30
6. BEEHIVE GRATE, SEE DETAIL 10, SHEET CD31
7. BEEHIVE GRATE CATCH BASIN INSTALLATION, SEE DETAIL 12, SHEET CD32
8. UNDER DRAIN CONCRETE INLET INSTALLATION, SEE DETAIL 16, SHEET CD33
9. CONTROL STRUCTURE FOR DETENTION POND, SEE DETAIL 17, SHEET CD34
10. CONCRETE INLET, SEE DETAIL 25 SHEET CD36.
11. ADA GRATE FOR RECTANGULAR FRAMES, SEE DETAIL 26 SHEET CD36.
12. RECTANGULAR FRAMES, SEE DETAIL 27 SHEET CD37.
13. PVC CATCH BASIN. SEE DETAIL 28 SHEET CD37.
14. PVC CATCH BASIN CONCRETE COLLAR. SEE DETAIL 29 SHEET CD37.

Drawing: C:\BMS\SKILLINGS-PW-01\TRISTAN ROBERTSON\DMS12837\23014_NT_SD_03.DWG Layout Tab: 23014_NT_SD_03
Xrefs: PC PARKS TITLEBLOCK.DWG
Date: 10/21/2026 Time: 08:27:13 AM Plotted by: TRISTANROBERTSON

SKILLINGS

DESIGNED BY: S. MOLAMPHY	SURVEYED BY: R. EDWARDS
DRAWN BY: S. MOLAMPHY	DATE SURVEYED: October 21, 2026
CHECKED BY: T. SKILLINGS	DATE PLOTTED: Oct 21, 2026

THOMAS E. SKILLINGS STATE OF WASHINGTON 17952 REGISTERED PROFESSIONAL ENGINEER 10/21/2026

NO.	DATE	REVISION	BY	APPROVED
3	10/22/26	ADDENDUM 4		
2	10/15/26	ADDENDUM 2		
1	10/09/26	ADDENDUM 1		

Pierce County
Parks and Recreation Services
Lakewood Community Center
9112 Lakewood Drive SW
Lakewood, WA 98499
253.798.4081

BID SET

CD03

ORANGEGATE PARK
PHASE 1 IMPROVEMENTS

SCHEDULE OF STRUCTURES

P-111031

REGION NO.	STATE	FEDERAL AID PROJECT NO.	SHEET NO.	TOTAL SHEETS
10	WA	*N/A*		

Know what's below. Call before you dig.

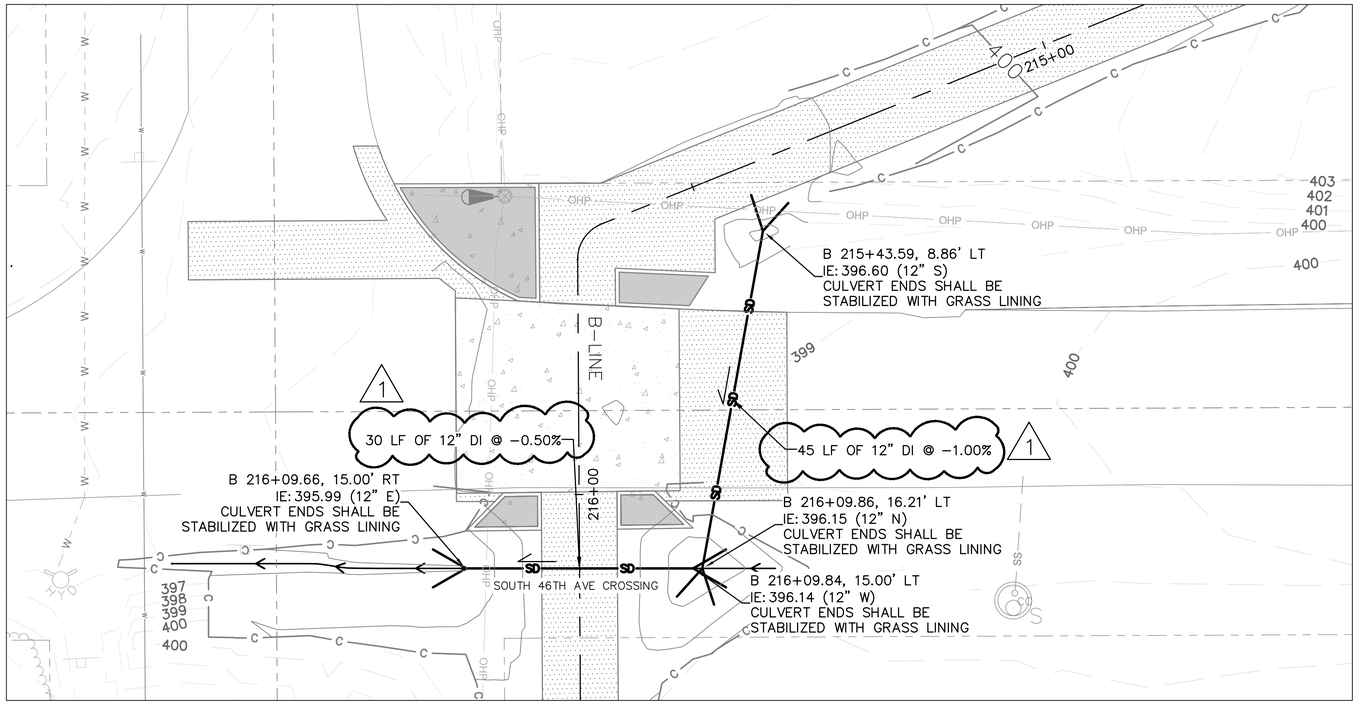

NORTH

0' 5' 10' 20'

SCALE

PLAN VIEW

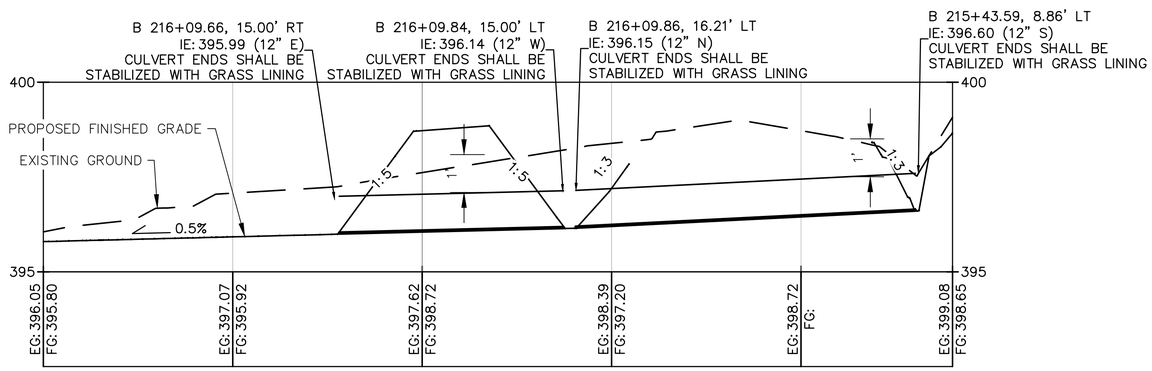

PROFILE VIEW

SCHEDULE B - NON-GRANT REIMBURSABLE

NOTES:
FINISHED GRADE AND EXISTING GROUND AS SHOWN AT STRUCTURE AND PIPE LOCATIONS.

LENGTHS OF PIPE NOT CALCULABLE FROM STATIONS AND OFFSETS.

SEE SHEET CD06 AND CD07 FOR B–LINE ALIGNMENT.

SKILLINGS

DESIGNED BY:	SURVEYED BY:
S. MOLAMPHY	R. EDWARDS
DRAWN BY:	DATE SURVEYED:
S. MOLAMPHY	October 21, 2026
CHECKED BY:	DATE PLOTTED:
T. SKILLINGS	Oct 21, 2026

THOMAS E. SKILLINGS — STATE OF WASHINGTON — 17952 — REGISTERED PROFESSIONAL ENGINEER — 10/21/2026

NO.	DATE	REVISION	BY	APPROVED
1	10/22/26	ADDENDUM 4		

Pierce County
Parks and Recreation Services
Lakewood Community Center
9112 Lakewood Drive SW
Lakewood, WA 98499
253.798.4081

BID SET

CD24

ORANGEGATE PARK PHASE 1 IMPROVEMENTS

CULVERT PROFILES

P-111031

Drawing: C:\BMS\SKILLINGS-PW-01\TRISTAN ROBERTSON\DMS12837\23014_PR_SD_5.DWG Layout Tab: LAYOUT2
Xrefs: L-SHEET CUTS.DWG / X-BASE.DWG / 23014_BP_DR.DWG / PC PARKS TITLEBLOCK.DWG / 23014_BP_EX_COMPOSITE-TOPO.DWG / X-CIVIL CONTOURS.DWG
Date: 10/21/2026 Time: 08:26:27 AM Plotted by: TRISTANROBERTSON

REGION NO.	STATE	FEDERAL AID PROJECT NO.	SHEET NO.	TOTAL SHEETS
10	WA	*N/A*		

811 Know what's below. Call before you dig.

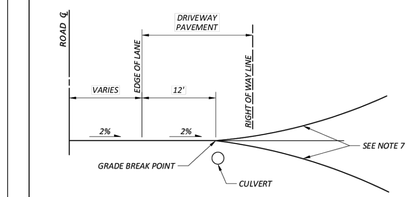

CROSS SECTION

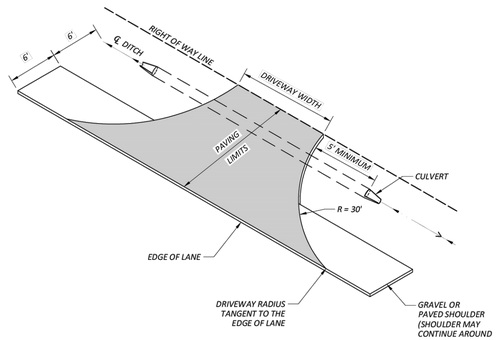

NOTES:

1) *DRIVEWAY WIDTH = 15' MINIMUM TO 25' MAXIMUM, OR 30' MAXIMUM FOR THREE CAR GARAGE ON LOCAL ROAD.*
2) *DRIVEWAY PAVING = 2" MINIMUM COMPACTED DEPTH HOT MIX ASPHALT CL. 1/2 IN. OVER 2" MINIMUM COMPACTED DEPTH CRUSHED SURFACING TOP COURSE, OR 6" MINIMUM CEMENT CONCRETE.*
3) *ENGINEERED PAVEMENT DESIGN REQUIRED FOR ARTERIAL ROADS.*
4) *STORM DRAINAGE FROM DRIVEWAY SHALL NOT BE PERMITTED TO DRAIN ONTO ROADWAY SURFACE, UNLESS ACCOUNTED FOR IN DESIGN.*
5) *DRIVEWAY SHALL NORMALLY BE AT 90 DEGREES TO ROAD CENTERLINE, BUT CAN VARY FROM 75 DEGREES TO 90 DEGREES.*
6) *12" MINIMUM CONCRETE CULVERT, LENGTH AS DETERMINED BY WIDTH OF DRIVEWAY, PLUS 5' AT EACH END, WITH BEVELED END SECTIONS.*
7) *RECOMMENDED MAXIMUM GRADES +/- 15% BEYOND GRADE BREAK POINT. VERTICAL CURVES NOT TO EXCEED A 3 1/4" CREST OR A 1" SAG IN A 10' CHORD.* *(NOT TO SCALE)*

Pierce County
Office of the County Engineer

APPROVED BY: COUNTY ENGINEER
3/12/2025
DATE

MAJOR DRIVEWAY APPROACH, SHOULDER AND OPEN DRAINAGE
STANDARD DRAWING PC.F5.1

STANDARD DRIVEWAY SECTION
NTS

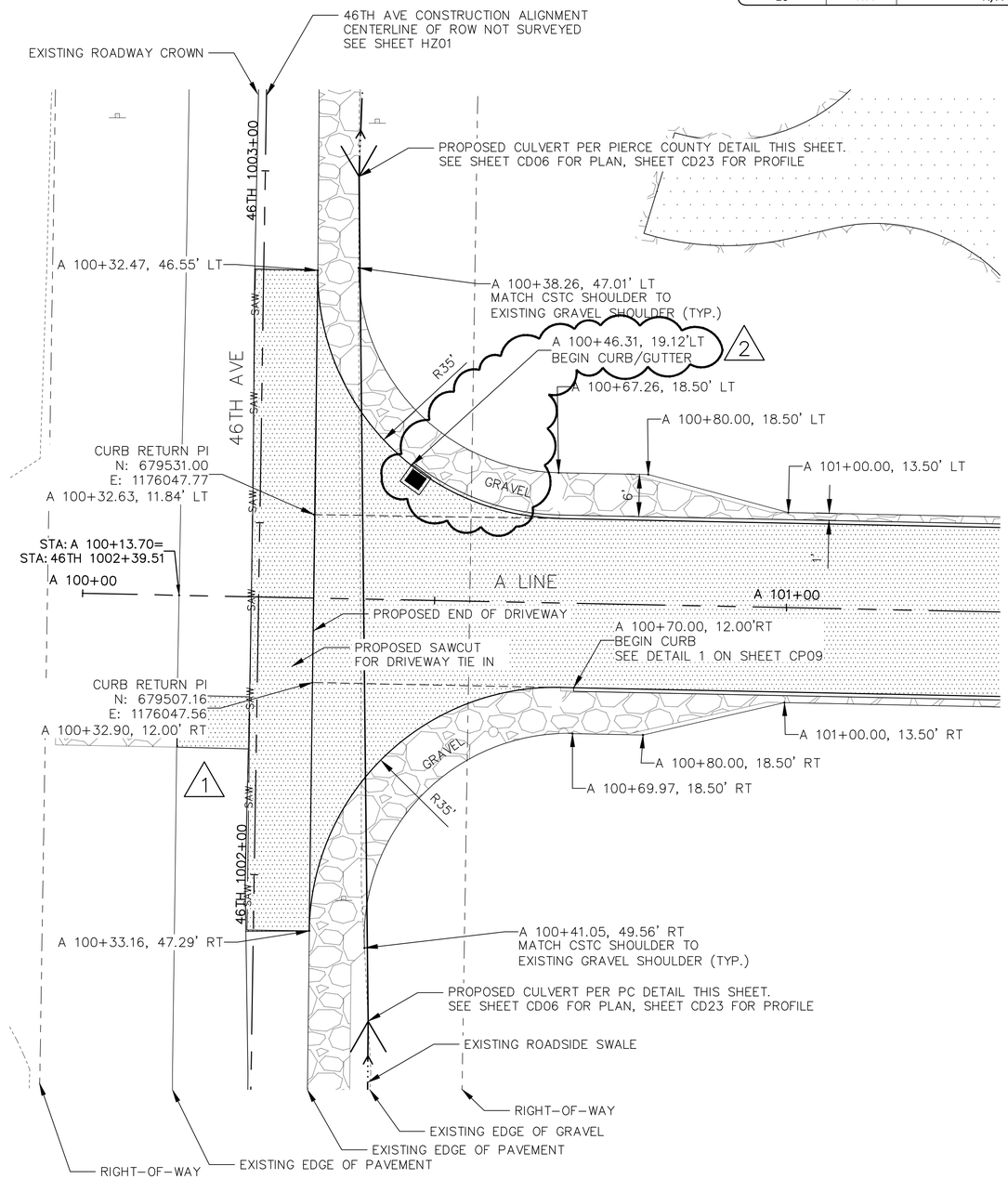

NOTE:
PLAN VIEW OF DRIVEWAY WAS
ADAPTED FROM PIERCE COUNTY
STANDARD DRAWING PC.F5.1

NORTH 0' 5' 10' 20' SCALE

Drawing: C:\BMS\SKILLINGS-PW-01\TRISTAN ROBERTSON\DMS12837\23014_PS_ENTRY.DWG Layout Tab: ENTRY DRIVE ENLARGED VIEW
Xrefs: 23014_BP_RD.DWG / 23014_BP_EX_TOPO.DWG / X-BASE.DWG / PC PARKS TITLEBLOCK.DWG / 23014_BP_BY OTHERS_PIPELINE2.DWG
Date: 10/21/2026 Time: 08:25:33 AM Plotted by: TRISTANROBERTSON

SKILLINGS
5016 Lacey Boulevard SE, Lacey, Washington 98503
(360) 491-3399 Fax (360) 491-3857

DESIGNED BY: S. MOLAMPHY	SURVEYED BY: R. EDWARDS
DRAWN BY: S. MOLAMPHY	DATE SURVEYED: October 21, 2026
CHECKED BY: T. SKILLINGS	DATE PLOTTED: Oct 21, 2026

THOMAS E. SKILLINGS — STATE OF WASHINGTON — 17952 — REGISTERED PROFESSIONAL ENGINEER
10/21/2026

NO.	DATE	REVISION	BY	APPROVED
2	10/22/26	ADDENDUM 4		
1	10/09/26	ADDENDUM 1		

Pierce County
Parks and Recreation Services
Lakewood Community Center
9112 Lakewood Drive SW
Lakewood, WA 98499
253.798.4081

BID SET

CP10

ORANGEGATE PARK PHASE 1 IMPROVEMENTS

ENTRY DRIVE ENLARGED VIEW

P-111031

REGION NO.	STATE	FEDERAL AID PROJECT NO.	SHEET NO.	TOTAL SHEETS
10	WA	*N/A*		

811 Know what's below. Call before you dig.

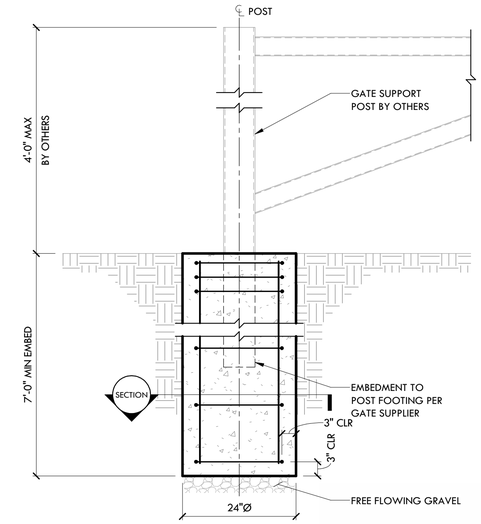

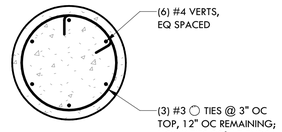

SECTION

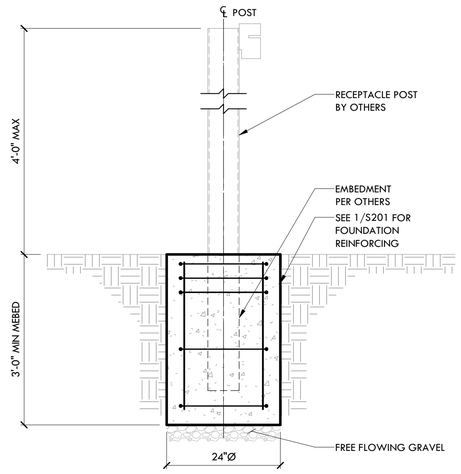

1 VEHICULAR ACCESS GATE FOOTING
SCALE : 3/4" = 1'-0"

2 GATE RECEPTACLE POST
SCALE : 3/4" = 1'-0"

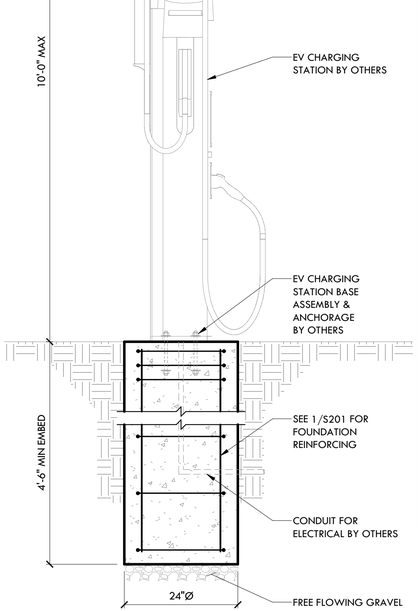

5 EV CHARGING STATION FOUNDATION
SCALE : 3/4" = 1'-0"

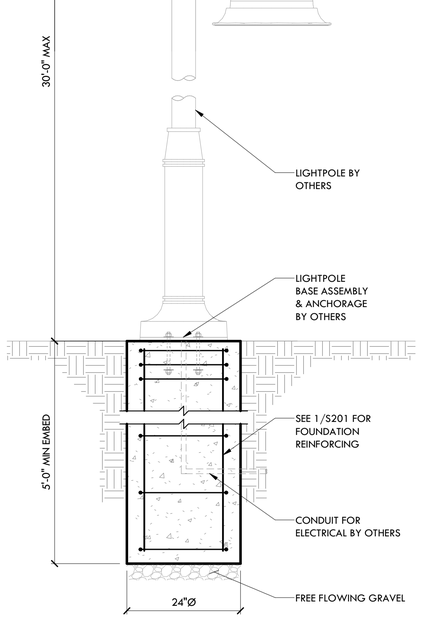

7 LIGHTPOLE FOUNDATION
SCALE : 3/4" = 1'-0"

NO.	DATE	REVISION	BY	APPROVED
1	10/22/2026	ADDENDUM 4	AC	OB

HBB LANDSCAPE ARCHITECTURE

LUND OPSAHL
1211 Fourth Avenue, Suite 1200
Seattle, Washington 98161
206.402.5136 www.lundopsahl.com

DESIGNED BY: *A. CAPUANO*	*SURVEYED BY:*
DRAWN BY: *J. KERLIN*	*DATE SURVEYED:*
CHECKED BY: *O. BOWER*	*DATE PLOTTED:* *JULY 3, 2025*

DAVID JOHN PAUL BOWER — STATE OF WASHINGTON — 49147 — PROFESSIONAL ENGINEER — 12/19/2025

Pierce County
Parks and Recreation Services
Lakewood Community Center
9112 Lakewood Drive SW
Lakewood, WA 98499
253.798.4081

BID SET

S201

ORANGEGATE PARK
PHASE 1 IMPROVEMENTS

STRUCTURAL DETAILS

P-111031

Drawing: S:\2023\23-033-01 ORANGEGATE PARK PHASE 1\CAD\CLIENT XREF\TB BLANK.DWG Layout Tab: XX04
Xrefs: PC PARKS TITLEBLOCK.DWG / 23014_BP_BY OTHERS_PIPELINE2.DWG
Date: 05/13/2025 Time: 09:51:54 AM Plotted by: DGENSON

REGION NO.	STATE	FEDERAL AID PROJECT NO.	SHEET NO.	TOTAL SHEETS
10	WA	*N/A*		

SITE DESIGN SCHEDULE A - GRANT REIMBURSABLE

SYM	QTY	ITEM	REMARKS	DETAILS
	787 SF	CHIPPED ROCK TRAIL		2 / LS19
		THICKENED CONCRETE AREA	AREA IS SHOWING THE LIMITS OF THICKENED CONCRETE; DIMENSION LIMITS ARE DEFINED IN SITE FURNISHING DETAILS	
	5,470 SF	PLAY AREA SURFACING – TEAL	POURED–IN–PLACE RUBBERIZED SURFACING	1 / LS17
	1,430 SF	PLAY AREA SURFACING – SKY BLUE	POURED–IN–PLACE RUBBERIZED SURFACING	1 / LS17
T R	5/4	TRASH/RECYCLE RECEPTACLE		1 / LS14
	4	BIKE RACK		2 / LS15
	6	PICNIC TABLE A		1 / LS15
	6	ACCESSIBLE PICNIC TABLE A		1 / LS15
	2	PICNIC TABLE B		1 / LS16
	2	ACCESSIBLE PICNIC TABLE B		2 / LS16
	8	BENCH		3 / LS16
	9	REMOVABLE BOLLARD		3 / LS14
	6	BOLLARD RECEIVER		3 / LS14
x x	2,100 LF	OLA CHAINLINK FENCE AND GATE	ALIGNMENT TO BE LOCATED PER OWNER'S REP FIELD DIRECTIVE TO AVOID CONFLICTS WITH EXISTING TREES	1 / LS12
	494 LF	SPLIT RAIL FENCE		2 / LS12
	1	VEHICULAR ACCESS GATE		1 / LS13
	2	AMENITY INFO. & RULES SIGN – OFF–LEASH AREA RULES FENCE MOUNT	LOCATION AND MOUNT DIRECTLY ON FENCE PER OWNER'S REP FIELD DIRECTIVE, SEE APPENDIX D ATHLETIC FIELDS RULES PANEL FOR PANEL DIMENSIONS AND MOUNTING	2 / LS14
NO SYM	12	DOG MITT STATION	LOCATE PER OWNER'S REP FIELD DIRECTION	
E	1	VEHICULAR PARK ENTRY SIGN	SEE APPENDIX D	
	2	PARK INFO & RULES SIGN	SEE APPENDIX D; INSTALL TOP OF FOOTINGS FLUSH WITH TOP OF ADJACENT CONCRETE	
	1	AMENITY INFO. & RULES SIGN – PLAYGROUND RULES	SEE APPENDIX D; INSTALL TOP OF FOOTINGS FLUSH WITH TOP OF ADJACENT CONCRETE	
PW	1	PLAYGROUND WELCOME SIGN	SEE APPENDIX D; "WELCOME! AGES 2–12"	
	2	TRAIL DIRECTIONAL SIGN	SEE APPENDIX D	
	2	TRAIL ENTRY – LARGE SIGN	SEE APPENDIX D	
	2	AMENITY INFO. & RULES SIGN – PARK SHELTER RULES	SEE APPENDIX D, MOUNT ON POST PER OWNER'S REP FIELD DIRECTIVE	
3	17	LANDSCAPE BOULDER–3		
4	17	LANDSCAPE BOULDER–4		
5	12	LANDSCAPE BOULDER–5		
6	8	LANDSCAPE BOULDER–6		
7	2	LANDSCAPE BOULDER–7		
8	2	LANDSCAPE BOULDER–8		

SITE DESIGN SCHEDULE B - NON-GRANT REIMBURSABLE

SYM	QTY	ITEM	REMARKS	DETAILS
	263 SF	COBBLE ROCK PAVING	LOCATED AT THE 84TH PEDESTRIAN CROSSING	4 / LS11
	1	TRAIL DIRECTIONAL SIGN	SEE APPENDIX D	
	1	LOW PROFILE INFORMATIONAL SIGN	SEE APPENDIX D	
	2	GENERAL SIGN – PEDESTRIAN SCALE	SEE APPENDIX D	
	1	TRAIL ENTRY – LARGE SIGN	SEE APPENDIX D	
	2	TRAIL COUNTER		
C	1	CAR COUNTER		
	335 LF	SPLIT RAIL FENCE		
NO SYM	15	ADD ALT 5: TRAIL DIRECTIONAL SIGN	SUPPLY ONLY, OWNER TO INSTALL, SEE APPENDIX D	
NO SYM	4	ADD ALT 6: TRAIL ENTRY – LARGE SIGN	SUPPLY ONLY, OWNER TO INSTALL, SEE APPENDIX D	

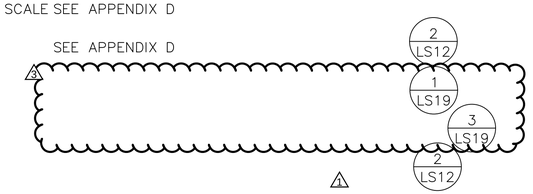

SITE DESIGN LEGEND

SYM	ITEM	REMARKS	DETAILS
	CONCRETE PAVING	SEE PAVING DWGS	
	CONCRETE SCORE JOINT	TOOLED JOINT	1 / LS11
	CONCRETE EXPANSION JOINT		2 / LS11
	CONCRETE FINISH – MEDIUM BROOM		3 / LS11
	CRUSHED SURFACING TOP COURSE OR GRAVEL SHOULDER	SEE PAVING DWGS	
	COBBLE DRAINAGE STRIP OR SWALE AREA	SEE STORM DRAINAGE DWGS	
	PLANTING AREAS	SEE PLANTING DWGS	
	BOARDWALK		
	BARRIER LOGS		
X / XX	DETAIL IDENTIFICATION / DETAIL SHEET IDENTIFICATION		
	PROPERTY LINE		
	LIMITS OF WORK		
	EXISTING TREE TO REMAIN		

3 / LS17

2 / LS14

Know what's below. Call before you dig.

NOTES

1. ANY DISCREPANCIES WITH THE DWG AND/OR SPECS AND SITE CONDITIONS SHALL BE BROUGHT TO THE ATTENTION OF THE OWNER'S REP PRIOR TO PROCEEDING WITH CONSTRUCTION.
2. INSTALL ALL CURVED LINES WITH CONTINUOUS RADII. TANGENT LINES WILL NOT BE ACCEPTED.
3. SEE APPENDIX E FOR MANUFACTURER'S FOOTINGS FOR PLAYGROUND EQUIPMENT.
4. ALL DIMENSIONS ARE TAKEN AT 90 DEGREE ANGLES TO FACE OF CURB OR WALL, TO CENTER OF POST FOR PLAY EQUIPMENT, TO CENTER OF SIGN PANEL, AND TO EDGE OR CENTER OF OTHER SITE FURNISHINGS UNLESS OTHERWISE NOTED.
5. SCALE OF SYMBOLS AND HATCHES MAY VARY ON PLANS.

COORDINATE CHART FOR LS08

PT	EASTING/NORTHING	DESCRIPTION
1	1176498.13, 679559.17	CENTER OF WE GO ROUND FOOTING
2	1176494.00, 679531.04	CENTER OF SWING SET FOOTING
3	1176517.83, 679505.17	CENTER OF SWING SET FOOTING
4	1176541.78, 679500.55	CENTER OF WE SAW FOOTING
5	1176549.84, 679500.89	CENTER OF WE SAW FOOTING
6	1176566.20, 679569.42	CENTER OF ROLLER SLIDE FOOTING
7	1176575.71, 679575.98	CENTER OF ROLLER SLIDE FOOTING
8	1176609.00, 679541.30	CENTER OF OODLE SWING FOOTING
9	1176622.76, 679542.31	CENTER OF OODLE SWING FOOTING
10	1176608.62, 679581.84	CENTER OF FORMA ALPINE SLIDE FOOTING
11	1176617.03, 679572.44	CENTER OF FORMA ALPINE SLIDE FOOTING
12	1176605.91, 679630.96	SOUTH CORNER OF LOG CRAWL TUNNEL
13	1176604.84, 679636.46	NORTH CORNER OF LOG CRAWL TUNNEL
14	1176589.60, 679604.28	CENTER OF OMNISPIN FOOTING
15	1176627.93, 679646.06	CENTER OF SYMBOL COMMUNICATION SIGN FOOTING
16	1176630.81, 679644.08	CENTER OF SYMBOL COMMUNICATION SIGN FOOTING
25	1176567.25, 679584.29	END OF PLAY ROPE
26	1176583.36, 679570.73	END OF PLAY ROPE
27	1176570.32, 679564.65	END OF PLAY ROPE
28	1176563.48, 679570.41	END OF PLAY ROPE
29	1176485.47, 679546.52	CORNER OF PICNIC TABLE
30	1176484.88, 679542.07	CORNER OF PICNIC TABLE
31	1176527.00, 679493.39	CORNER OF PICNIC TABLE
32	1176526.41, 679489.01	CORNER OF PICNIC TABLE

COORDINATE CHART FOR LS07

PT	EASTING/NORTHING	DESCRIPTION
17	1176498.13, 679559.17	CENTER OF PLAY AREA SURFACING – COLOR 1
18	1176506.67, 679518.67	CENTER OF PLAY AREA SURFACING – COLOR 1
19	1176546.03, 679501.32	CENTER OF PLAY AREA SURFACING – COLOR 1
20	1176615.87, 679541.77	CENTER OF PLAY AREA SURFACING – COLOR 1
21	1176615.24, 679582.27	CENTER OF PLAY AREA SURFACING – COLOR 1
22	1176587.97, 679602.35	CENTER OF PLAY AREA SURFACING – COLOR 1
23	1176598.42, 679625.04	CENTER OF PLAY AREA SURFACING – COLOR 1
24	1176613.31, 679635.95	CENTER OF PLAY AREA SURFACING – COLOR 1

PRIVATE IMPROVEMENTS

PERMIT #

DEVELOPMENT ENGINEER — DATE

PIERCE COUNTY ORDINANCE NOs: STORM _____ ROAD _____

1. A PRE-CONSTRUCTION MEETING SHALL BE REQUESTED AT LEAST 48-HOURS IN ADVANCE OF THE START OF CONSTRUCTION. CONTACT _____, THE AREA INSPECTOR, AT 253-798- _____.
2. APPOINT A CERTIFIED EROSION AND SEDIMENT CONTROL LEAD WHO SHALL BE PROVIDED A COPY OF THE SWPPP, EROSION CONTROL PLAN & INSPECTION SCHEDULE.
3. FAILURE TO OBTAIN REQUIRED INSPECTIONS MAY ENDANGER OR DELAY PROJECT APPROVAL.
4. ALL WORK IN THE PUBLIC RIGHT-OF-WAY REQUIRES A GENERAL RIGHT-OF-WAY PERMIT FROM PIERCE COUNTY PLANNING AND PUBLIC WORKS.

HBB LANDSCAPE ARCHITECTURE

DESIGNED BY: D. KOONTS	SURVEYED BY:
DRAWN BY: J. BAKKE	DATE SURVEYED:
CHECKED BY: J. VONG	DATE PLOTTED: October 21, 2026

STATE OF WASHINGTON · MERIT OVIR · 10/22/2026 · NO. 1396 EXP. 03/2027 · LICENSED LANDSCAPE ARCHITECT

NO.	DATE	REVISION	BY	APPROVED
3	10/22/2026	ADDENDUM 4	JB	DWK
2	10/16/2026	ADDENDUM 2	JB	DWK
1	10/09/2026	ADDENDUM 1	JB	DWK

Pierce County
Parks and Recreation Services
Lakewood Community Center
9112 Lakewood Drive SW
Lakewood, WA 98499
253.798.4081

BID SET

LS01

ORANGEGATE PARK
PHASE 1 IMPROVEMENTS

SITE DESIGN SCHEDULE, LEGEND, NOTES & ABBV

P-111031

Drawing: P:\2022 PROJECTS\2022-33C ORANGEGATE PARK - PHASE 1 IMPROVEMENTS\GRAPHICS\AUTOCAD\L-SITE-PLOT.DWG Layout Tab: LS01
Xrefs: (DIESEL evaluation failed)
Date: 10/21/2026 Time: 01:55:51 PM Plotted by: JBAKKE

REGION NO.	STATE	FEDERAL AID PROJECT NO.	SHEET NO.	TOTAL SHEETS
10	WA	N/A		

MATCHLINE; SEE SHEET LS03

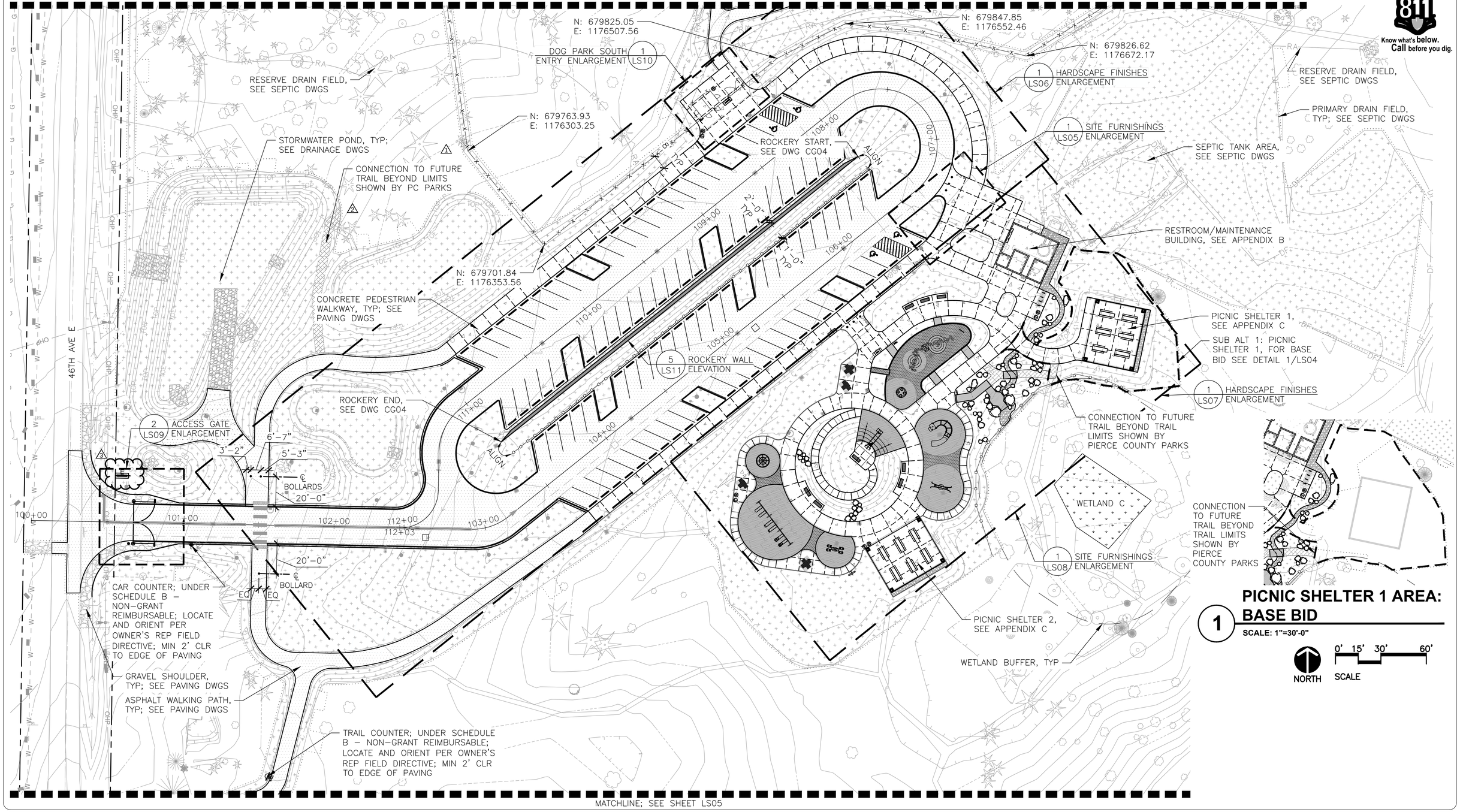

MATCHLINE; SEE SHEET LS05

1 PICNIC SHELTER 1 AREA: BASE BID

SCALE: 1"=30'-0"

NORTH

0' 15' 30' 60'

SCALE

Know what's below. Call before you dig.

HBB LANDSCAPE ARCHITECTURE	
DESIGNED BY: D. KOONTS	SURVEYED BY:
DRAWN BY: J. BAKKE	DATE SURVEYED:
CHECKED BY: J. VONG	DATE PLOTTED: October 20, 2026

STATE OF WASHINGTON · MERIT OVIR · LICENSED LANDSCAPE ARCHITECT · NO. 696 EXP. 03/2027 · 10/22/2026

NO.	DATE	REVISION	BY	APPROVED
3	10/20/2026	ADDENDUM 4	JB	DWK
2	10/16/2026	ADDENDUM 2	JB	DWK
1	10/09/2026	ADDENDUM 1	JB	DWK

Pierce County
Parks and Recreation Services
Lakewood Community Center
9112 Lakewood Drive SW
Lakewood, WA 98499
253.798.4081

BID SET

LS04

ORANGEGATE PARK
PHASE 1 IMPROVEMENTS

SITE DESIGN PLAN

P-111031

Drawing: P:\2022 PROJECTS\2022-33C ORANGEGATE PARK - PHASE 1 IMPROVEMENTS\GRAPHICS\AUTOCAD\L-SITE-PLOT.DWG Layout Tab: LS04
Xrefs: (DIESEL evaluation failed)
Date: 10/20/2026 Time: 09:43:56 PM Plotted by: JBAKKE

REGION NO.	STATE	FEDERAL AID PROJECT NO.	SHEET NO.	TOTAL SHEETS
10	WA	N/A		

811 Know what's below. Call before you dig.

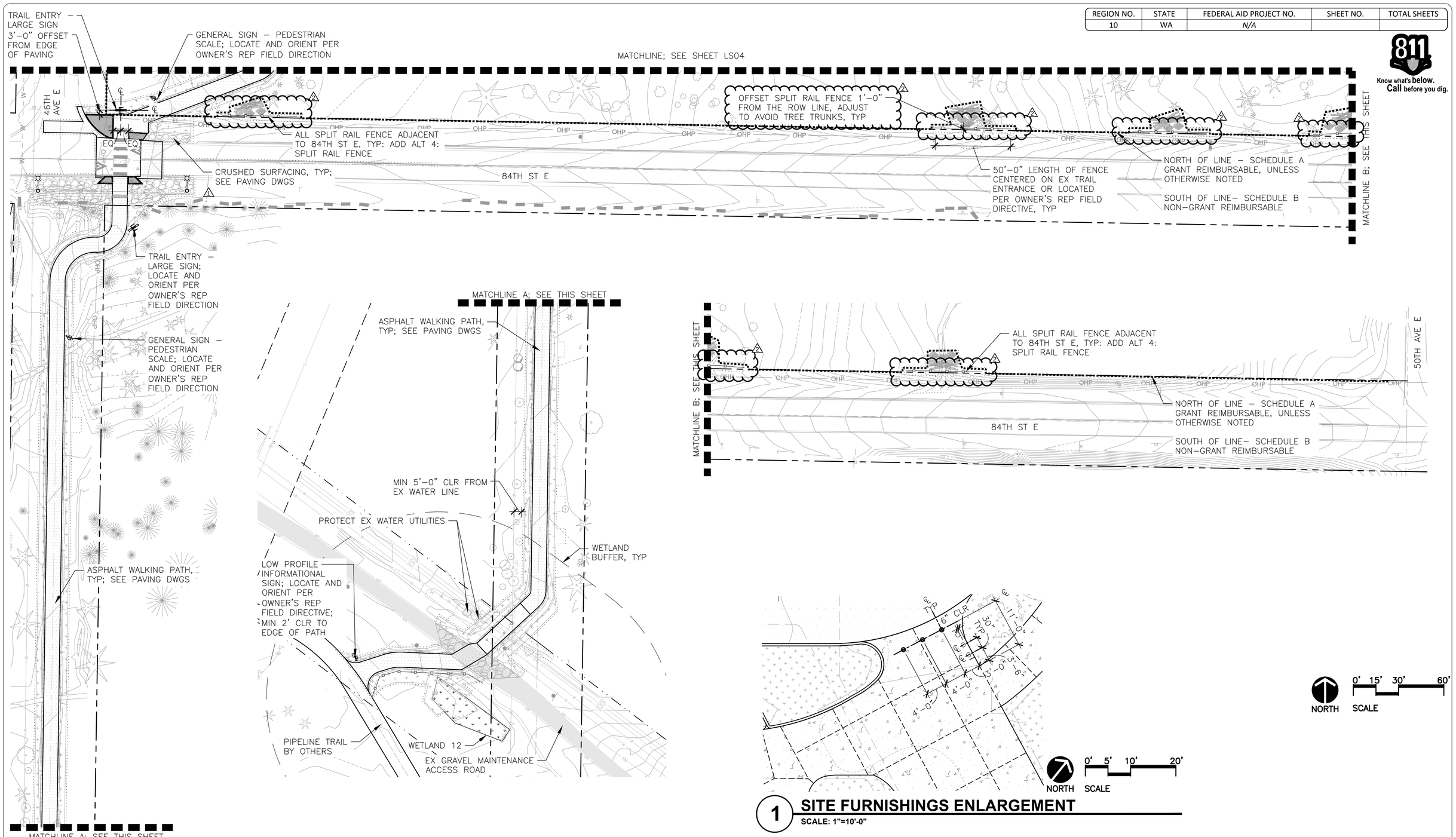

1 SITE FURNISHINGS ENLARGEMENT
SCALE: 1"=10'-0"

Drawing: P:\2022 PROJECTS\2022-33C ORANGEGATE PARK - PHASE 1 IMPROVEMENTS\GRAPHICS\AUTOCAD\L-SITE-PLOT.DWG Layout Tab: LS05
Xrefs: (DIESEL evaluation failed)
Date: 10/20/2026 Time: 09:44:23 PM Plotted by: JBAKKE

HBB LANDSCAPE ARCHITECTURE

DESIGNED BY: D. KOONTS	SURVEYED BY:
DRAWN BY: J. BAKKE	DATE SURVEYED:
CHECKED BY: J. VONG	DATE PLOTTED: October 20, 2026

STATE OF WASHINGTON · MERIT OVIR · 10/22/2026 · NO. 1396 EXP. 03/2027 · LICENSED LANDSCAPE ARCHITECT

NO.	DATE	REVISION	BY	APPROVED
2	10/22/2026	ADDENDUM 4	JB	DWK
1	10/09/2026	ADDENDUM 1	JB	DWK

Pierce County
Parks and Recreation Services
Lakewood Community Center
9112 Lakewood Drive SW
Lakewood, WA 98499
253.798.4081

BID SET

LS05

ORANGEGATE PARK
PHASE 1 IMPROVEMENTS

SITE DESIGN PLAN

P-111031

REGION NO.	STATE	FEDERAL AID PROJECT NO.	SHEET NO.	TOTAL SHEETS
10	WA	N/A		

NOTES:
1. ORIENT AS SHOWN ON PLANS.
2. OWNER'S REP TO VERIFY LOCATION AND ORIENTATION PRIOR TO CONSTRUCTION.
3. ATTACH TABLES TO PAVING PER DETAIL 1/LS15.

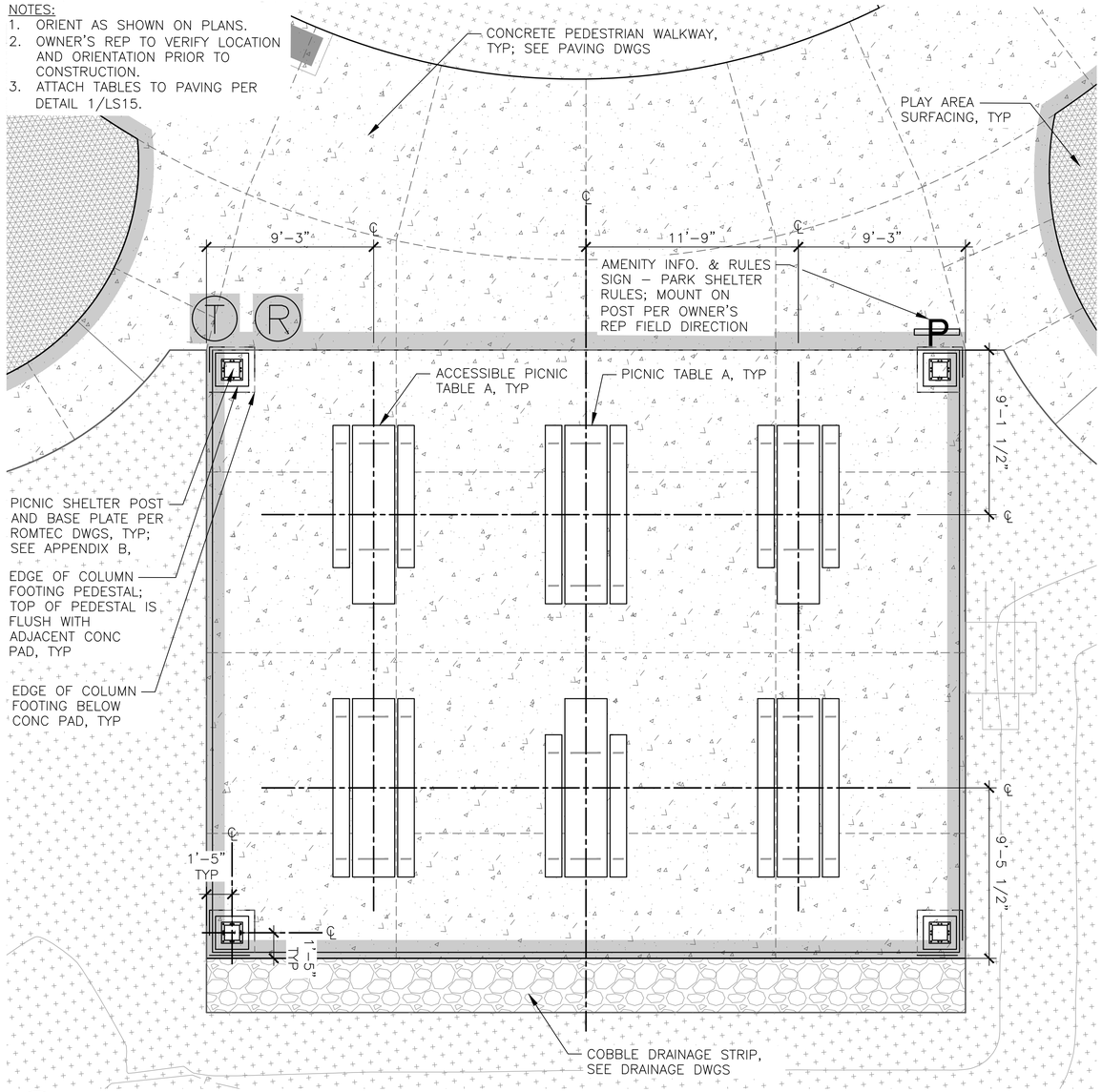

1 SHELTER ENLARGEMENT

SCALE: 1/4"=1'-0"

0' 2' 4' 8'
SCALE

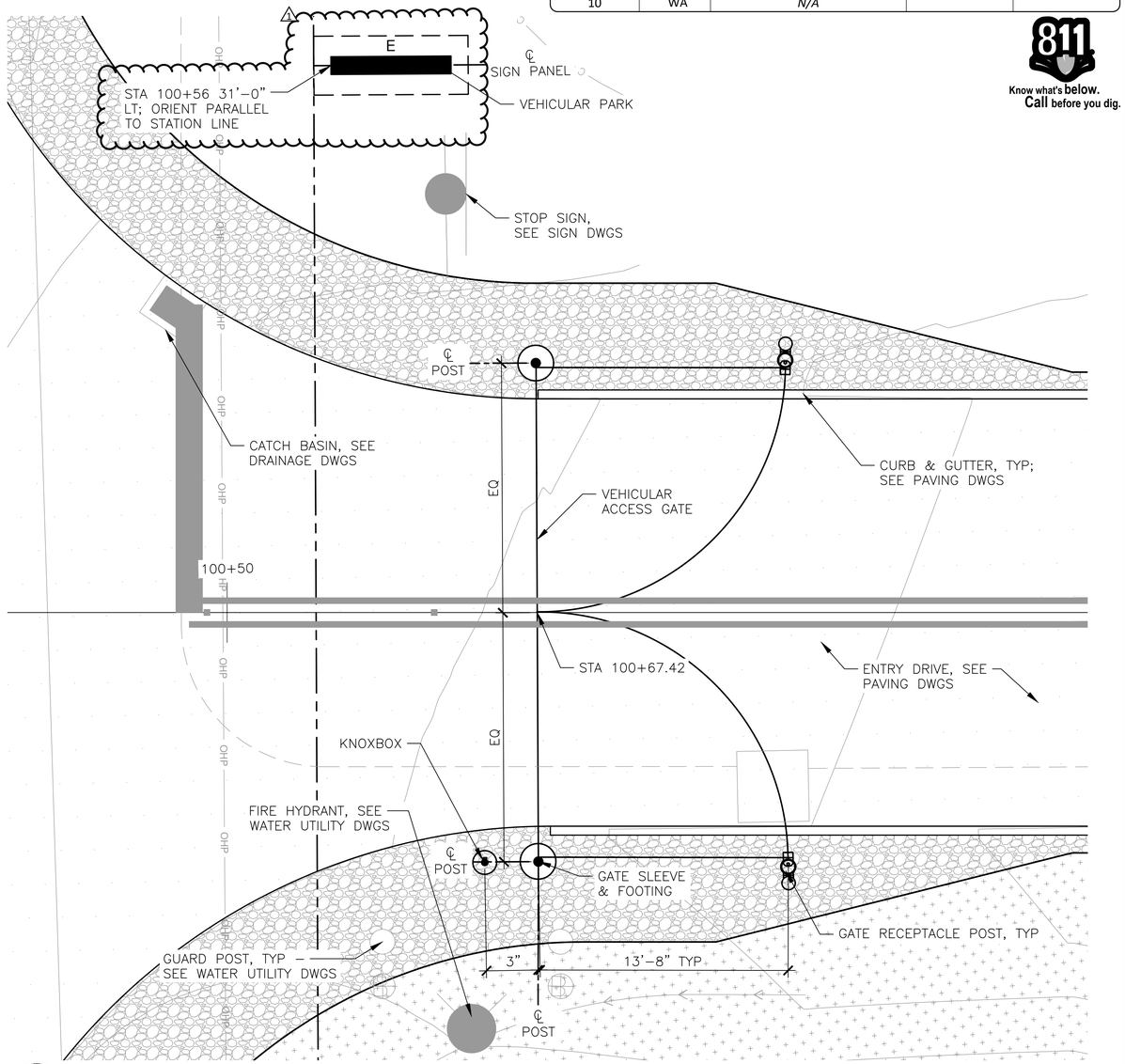

2 ACCESS GATE ENLARGEMENT

SCALE: 1/4"=1'-0"

NORTH

0' 2' 4' 8'
SCALE

811 Know what's below. Call before you dig.

Drawing: P:\2022 PROJECTS\2022-33c ORANGEGATE PARK - PHASE 1 IMPROVEMENTS\GRAPHICS\AUTOCAD\L-SITE-PLOT.DWG Layout Tab: LS09
Xrefs: (DIESEL evaluation failed)
Date: 10/20/2026 Time: 09:44:42 PM Plotted by: JBAKKE

HBB LANDSCAPE ARCHITECTURE

DESIGNED BY: D. KOONTS	SURVEYED BY:
DRAWN BY: J. BAKKE	DATE SURVEYED:
CHECKED BY: J. VONG	DATE PLOTTED: October 20, 2026

STATE OF WASHINGTON · MERIT OVIR · LICENSED LANDSCAPE ARCHITECT · NO. 1986 EXP. 03/2027 · 10/22/2026

NO.	DATE	REVISION	BY	APPROVED
1	10/22/2026	ADDENDUM 4	JB	DWK

Pierce County
Parks and Recreation Services
Lakewood Community Center
9112 Lakewood Drive SW
Lakewood, WA 98499
253.798.4081

BID SET

LS09

ORANGEGATE PARK
PHASE 1 IMPROVEMENTS
SITE DESIGN ENLARGEMENTS
P-111031

REGION NO.	STATE	FEDERAL AID PROJECT NO.	SHEET NO.	TOTAL SHEETS
10	WA	*N/A*		

811 Know what's below. Call before you dig.

NOTE:
1. ALL COMPONENTS TO BE BLACK VINYL COATED.
2. POSTS TO BE PLUMB, RAILS TO BE PARALLEL TO FINISH GRADE

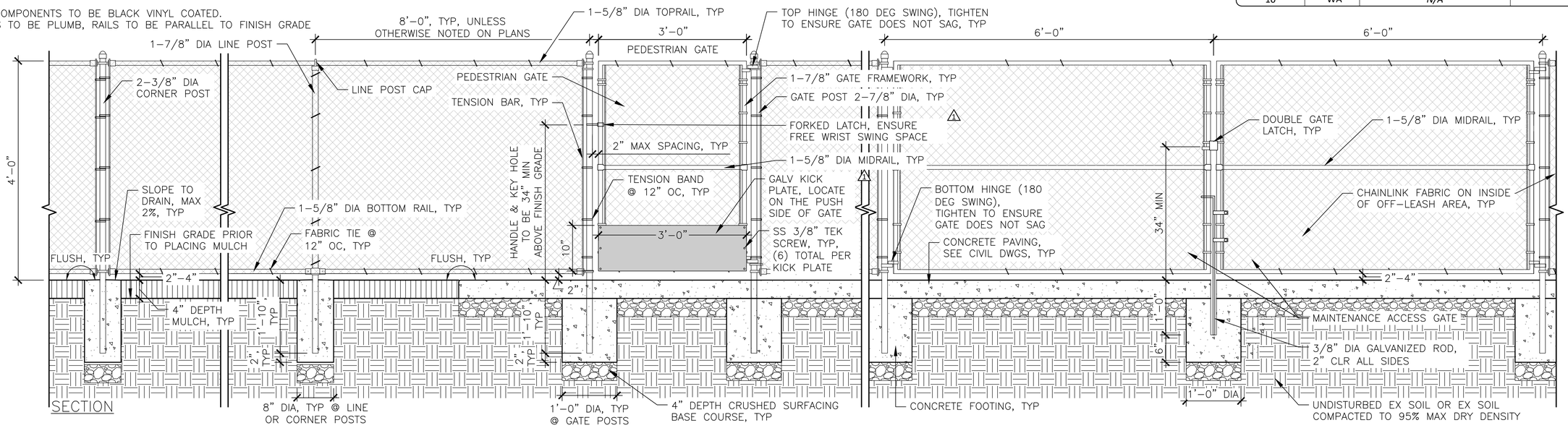

1 OLA CHAINLINK FENCE & GATE

SCALE: 1"=1'-0"

NOTE:
1. INSTALL POSTS PLUMB & RAILS APPROX PARALLEL TO FINISH GRADE.

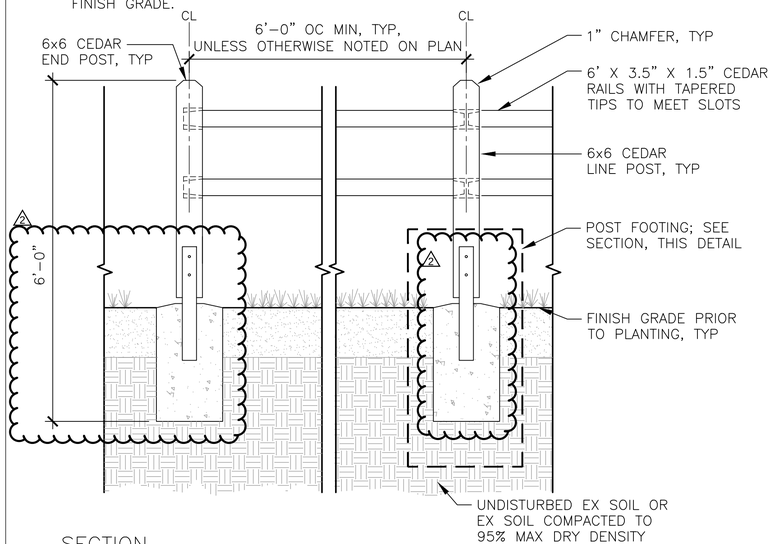

SECTION

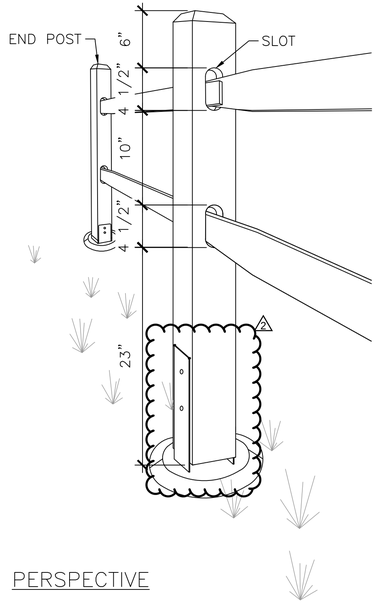

PERSPECTIVE

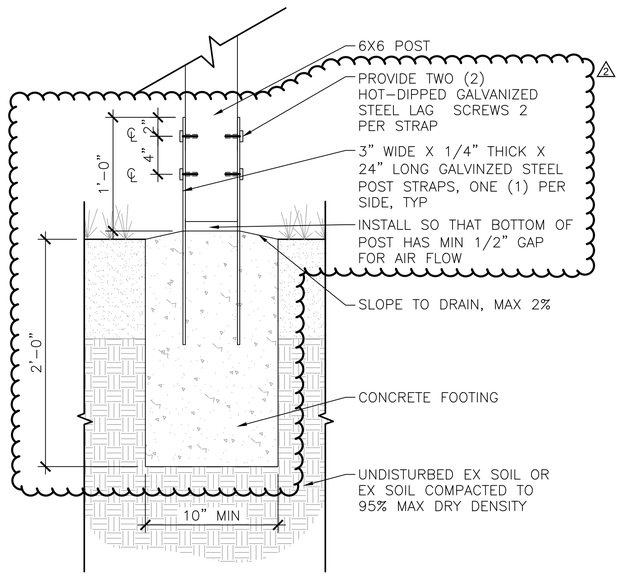

SECTION – POST FOOTING

2 SPLIT RAIL FENCE

SCALE: 3/4"=1'-0"(ELEVATION), 1-1/2"=1'-0" (SECTION)

HBB LANDSCAPE ARCHITECTURE

DESIGNED BY: D. KOONTS	SURVEYED BY:
DRAWN BY: J. BAKKE	DATE SURVEYED:
CHECKED BY: J. VONG	DATE PLOTTED: October 21, 2026

STATE OF WASHINGTON · MERIT OVIIR · 10/22/2026 · NO. 1386 EXP. 03/2027 · LICENSED LANDSCAPE ARCHITECT

NO.	DATE	REVISION	BY	APPROVED
2	10/22/2026	ADDENDUM 4	JB	DWK
1	10/09/2026	ADDENDUM 1	JB	DWK

Pierce County
Parks and Recreation Services
Lakewood Community Center
9112 Lakewood Drive SW
Lakewood, WA 98499
253.798.4081

BID SET

LS12

ORANGEGATE PARK
PHASE 1 IMPROVEMENTS
SITE DESIGN DETAILS
P-111031

Drawing: P:\2022 PROJECTS\2022-33C ORANGEGATE PARK - PHASE 1 IMPROVEMENTS\GRAPHICS\AUTOCAD\L-SITE DETAILS-PLOT.DWG Layout Tab: LS12
Xrefs: (DIESEL evaluation failed)
Date: 10/21/2026 Time: 03:14:41 PM Plotted by: JBAKKE

REGION NO.	STATE	FEDERAL AID PROJECT NO.	SHEET NO.	TOTAL SHEETS
10	WA	*N/A*		

Know what's below. Call before you dig.

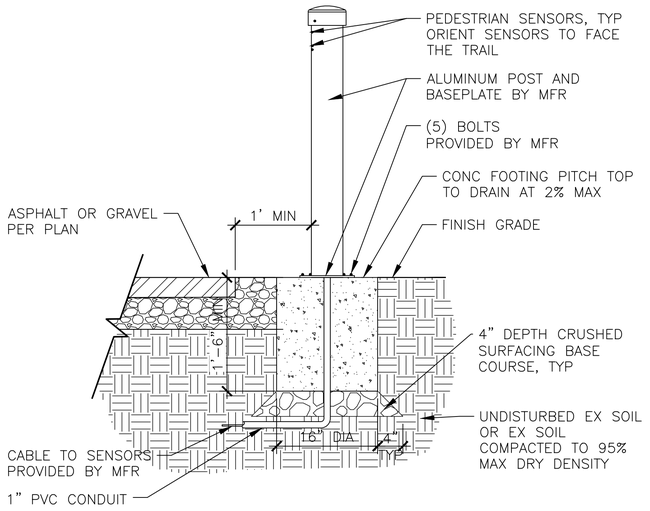

SECTION

1 TRAIL COUNTER

SCALE: 1"=1'-0"

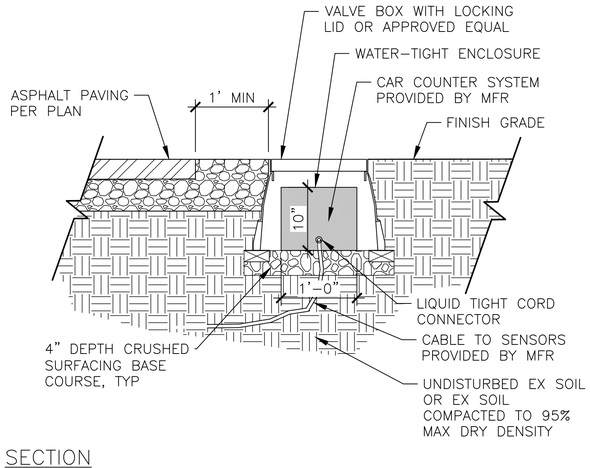

SECTION

3 CAR COUNTER

SCALE: 1"=1'-0"

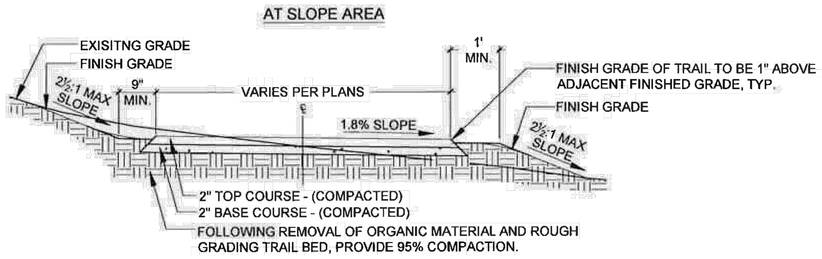

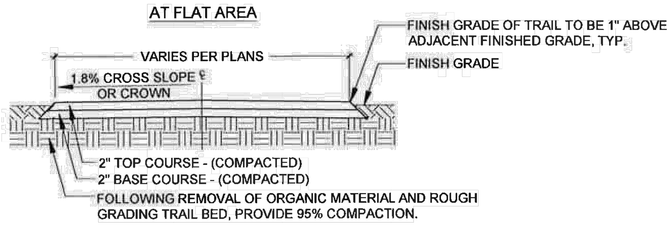

GENERAL NOTES:

1. ALL DEPTHS SHOWN ARE COMPACTED DEPTHS.
2. ALL TRAIL CONSTRUCTION SHALL INCLUDE STANDARD CLEARING LIMITS AS FOLLOWS: BRUSH AND BRANCHES ABOVE 36" ABOVE GROUND LEVEL SHALL BE REMOVED TO A HT OF 8' WITHIN 3' OF TRAIL. ALL VEGETATION BELOW 36" HT SHALL BE CUT BACK TOT HE WIDTH OF THE TRAIL. FALLEN LOGS SHALL BE CUT FLUSH AT THE EDGE OF THE TRAIL.
3. FOLLOWING CLEARING WITHIN THE DESIGNED TRAIL CORRIDOR, REMOVE ALL ROOTS AND ORGANIC DEBRIS TO A DEPTH OF 3" PRIOR TO IMPORTING CRUSHED ROCK. ESTABLISH DESIGN CROSS-SLOPE IN SUBGRADE MATERIALS, SLOPE OR CROWN AS DIRECTED.
4. IN AREAS OF SIGNIFICANT TREE ROOTS, EXCAVATE ONLY 2" TO SUBGRADE AND COMPACT. PROVIDE 2" BASE COURSE AND 2" TOP COURSE PER SPECIFICATION. ROLL/COMPACT EDGES OF FINISH PATH TO BLEND BACK TO ADJACENT GRADE. FINISH GRADE OF PATH WILL BE FLUSH OR SLIGHTLY ELEVATED/CROWNED ABOVE ADJACENT SURFACES.
5. IMPORT CRUSHED ROCK FOLLOWING DEPARTMENTAL APPROVAL OF PREPARED TRAIL BED. TAPER EDGES AT A 45° ANGLE INTO THE SUBGRADE. TOP COURSE TO BE 1" ABOVE ADJACENT WITH FINISHED GRADE. WHERE DESIRED, PROVIDE COMPLETE MECHANICAL COMPACTION. WHERE THIS IS IMPRACTICAL OR IMPOSSIBLE, COMPACT BY HAND WITH AN APPROPRIATELY WEIGHTED IMPLEMENT.
6. PERFORM SITE RESTORATION AND REVEGETATION IMMEDIATELY UPON COMPLETION OF TRAIL WORK AND/OR RELATED DRAINAGE WORK OR AS DIRECTED BY THE OWNER.

2 CHIPPED ROCK TRAIL

NOT TO SCALE

Drawing: P:\2022 PROJECTS\2022-33C ORANGEGATE PARK - PHASE 1 IMPROVEMENTS\GRAPHICS\AUTOCAD\L-SITE DETAILS-PLOT.DWG Layout Tab: LS20
Xrefs: (DIESEL evaluation failed)
Date: 10/21/2026 Time: 01:27:32 PM Plotted by: JBAKKE

HBB LANDSCAPE ARCHITECTURE

DESIGNED BY: D. KOONTS	*SURVEYED BY:*
DRAWN BY: J. BAKKE	*DATE SURVEYED:*
CHECKED BY: J. VONG	*DATE PLOTTED: October 21, 2026*

STATE OF WASHINGTON · MERIT OVIR · 10/22/2026 · LICENSED LANDSCAPE ARCHITECT · NO. 1396 EXP. 03/2027

NO.	DATE	REVISION	BY	APPROVED
1	10/22/2026	ADDENDUM 4	JB	DWK

Pierce County
Parks and Recreation Services
Lakewood Community Center
9112 Lakewood Drive SW
Lakewood, WA 98499
253.798.4081

BID SET

LS19

ORANGEGATE PARK
PHASE 1 IMPROVEMENTS

SITE DESIGN DETAILS

P-111031

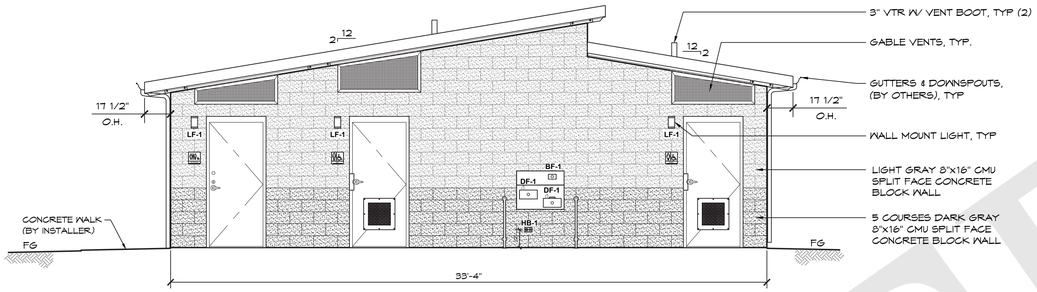

B ELEVATION VIEW

SCALE: 1/4" = 1'-0"

THESE PLAN VIEW AND ELEVATION DRAWINGS ARE A PRELIMINARY ARCHITECTURAL REPRESENTATION OF THE BUILDING. ALL DIMENSIONS, FEATURES AND COMPONENTS SHOWN ON THESE PRELIMINARY DRAWINGS MAY OR MAY NOT BE PART OF THE QUOTE. PLEASE REFER TO THE "SCOPE OF SUPPLY AND SERVICES" LETTER PROVIDED WITH YOUR QUOTE FOR ROMTEC'S PROPOSED SCOPE OF SUPPLY.

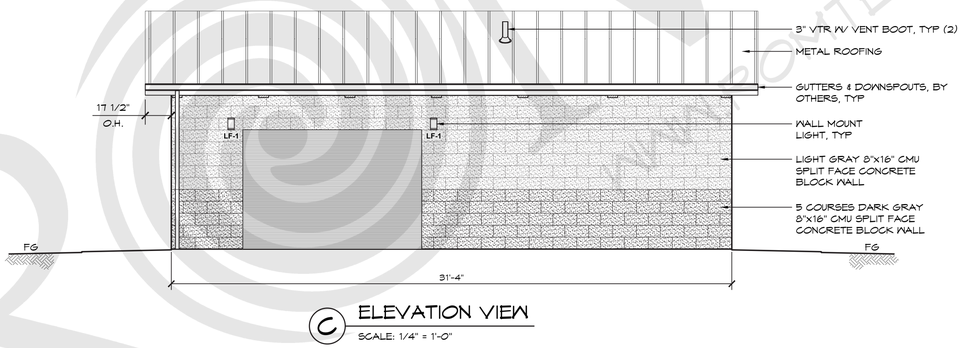

C ELEVATION VIEW

SCALE: 1/4" = 1'-0"

C. Automatic electric water pipe heating cable, 12-foot

D. Main breaker panel shall be provided by the Contractor a specified by the Contract Drawings

(1) ~~Breaker Panel shall be 200 Amp, single phase, rain tight.~~ ~~*Note: Breaker panel shall be sized to accept only the loads of the* ***building supplier*** *electrical fixture package. The* ***building supplier*** *should modify the main breaker panel as needed to be most efficient based on any design changes.*~~

2.5. STRUCTURE

A. Concrete Masonry Units (CMU) shall be supplied by ***building supplier***.

(1) Walls shall be constructed of 8"W x 16"L x 8"H split-face mortar joint concrete masonry units (concrete blocks).

(2) Blocks shall be manufactured to ASTM C90 designation for load bearing concrete masonry units.

(3) Block color to be ***Dark Gray*** and ***Light Gray.***

B. Rain Guard anti-graffiti exterior coating shall be supplied by ***building supplier***.

C. Sanitary tile cove base on interior restroom walls to be supplied by ***building supplier***.

D. Wire weave gable vents for natural ventilation shall be supplied by ***building supplier***.

(1) Pre-assembled steel frame with 10-gauge, 1" square lock joint wire weave mesh integral insect screen.

(2) Steel frame shall be primed and painted ***black***.

E. Door system components shall be supplied by ***building supplier***.

(1) Doors shall be Steelcraft® L14 standard laminated honeycomb core and 14-gauge galvanized steel.

(2) Door frame shall be pre-welded Steelcraft® 3-Sided flush frame, 14-gauge galvannealed A-60 steel.

(3) Doors and frames shall be powder coated ***black***.

(4) Masonry door clips (3/16" dia.) for door frame shall be fitted between the doorframe and concrete blocks to bond frame to wall. Door clips shall allow full internal grouting of the frame during installation.

(5) Hinges shall meet ANSI A5112 with non-removable pin and two ball bearings.

(6) Hager 5100 Series Grade 1 door closer shall be constructed of cast iron.

(7) Mechanical Room door shall have peephole.

(8) Unisex restroom door shall have interconnected locks with occupancy indicator.

(9) Door locks shall be:.

(a) Men's and Women's Restroom door locks shall be 40H Series by BEST, Product # 54H-7-R-15-H-626AM.

(b) Family Restroom door locks shall be 40H Series Heavy Duty Mortise Locks by BEST; 40H Series Heavy Duty Mortise Locks Product #54H-7-T-15-H-626AM-VIB

(10) Restroom doors to have 18" x 18" louvered vents.

F. Utility Door shall be heavy-duty rolling service door.

2.6. ROOFING

A. The following roof components shall be supplied by ***building supplier***.

(1) Glulam beam shall be 24F-V4 and architectural grade.

(2) Tongue & groove decking shall be 2x6 V-edge deck boards, select deck Douglas fir.

B. Roofing shall be Fabral, 24-gauge, 1-1/2" SSR150.

(1) Roofing package shall include inside and outside foam closures, matching trim (eaves, gables, and ridge) and fasteners, sheet metal flashing (all sides), and 30# felt (under metal).

(2) Roofing color to be selected by the ***owner*** from the manufacturers' standard color chart.

2.7. DELIVERY, STORAGE, AND HANDLING

A. The ***building supplier*** freight shall be based on delivering the product on a 48' to 53' flatbed or van truck and trailers, or as close to those dimensions as can legally access the site. Overall dimensions of the truck and trailers allowed to access the site are: 70' overall length, 102" wide and 168" high.

B. ***Building supplier*** shall deliver organized building package components in stages as shrink-wrapped pallets that correspond to a typical sequence of construction. A bill of material stating the stages of palletized components shall be included with every delivery.

(1) Stage 1 pallets shall include structural components such as block, frames, vents, beams, connectors, trusses, etc.

(2) Stage 2 pallets shall include second stage structural components such as filler wall material, windows, skylights, roofing, etc.

(3) Stage 3 pallets shall include structural finish components such as siding material, tile, doors etc.

REV	DATE	BY	DESCRIPTION
1			

NOT FOR CONSTRUCTION

ROMTEC
18240 NORTH BANK ROAD
ROSEBURG, OR 97470
(541)-496-3541 FAX (541)-496-0803

PROJECT: ORANGEGATE PARK
PIERCE COUNTY, WASHINGTON

SHEET TITLE: ELEVATIONS SPECIFICATIONS

PROJECT I.D.# 2247A

DATE: 06/10/2026

DRAWN BY: JRM/ZW

SHEET NO. 2B

FOR BID PURPOSES ONLY

© 2026 ROMTEC, INC. ALL RIGHTS RESERVED. THESE PLANS AND DRAWINGS MAY NOT BE REPRODUCED, ADAPTED OR FURTHER DISTRIBUTED, AND NO BUILDINGS MAY BE CONSTRUCTED FROM THESE PLANS, WITHOUT THE WRITTEN PERMISSION OF ROMTEC, INC.