OLD ROUTE 22
CULVERT REPLACEMENT PROJECT
CONSTRUCTION DRAWINGS

LOCATED IN

BETHEL TOWNSHIP
BERKS COUNTY, PENNSYLVANIA
OCTOBER 2026

GENERAL NOTES:

1. ANY REVISIONS TO THIS PLAN AFTER THE DATE OF PLAN PREPARATION OR LATEST REVISION SHALL NOT BE THE RESPONSIBILITY OF STECKBECK ENGINEERING & SURVEYING, INC. SUBSTITUTIONS FOR ANY MATERIAL NOTED ON THESE PLANS REQUIRES PRIOR WRITTEN APPROVAL OF STECKBECK ENGINEERING & SURVEYING, INC.
2. COORDINATE, LOCATE, AND CONDUCT ALL WORK RELATED TO PUBLIC AND PRIVATE UTILITIES IN ACCORDANCE WITH PUBLICATION 408, SECTIONS 105.06 AND 107.12.
3. CONTRACTOR IS RESPONSIBLE FOR SUB-GRADE PREPARATION.
4. PRIOR TO CONSTRUCTION, CONTRACTOR MUST VERIFY ALL ELEVATIONS SHOWN THROUGH THE ENGINEER.
5. PLAN LOCATION AND DIMENSIONS SHALL BE STRICTLY ADHERED TO UNLESS OTHERWISE DIRECTED BY THE ENGINEER RESPONSIBLE FOR THE PLANS.
6. DURING CONSTRUCTION OF THE PROPOSED IMPROVEMENTS, NO ALTERATION FROM THE PLAN MAY BE MADE WITHOUT TOWNSHIP APPROVAL. CHANGES TO THE APPROVED PLAN SHALL ONLY BE AUTHORIZED BY WRITTEN APPROVAL OF THE TOWNSHIP OR THE TOWNSHIP'S AGENT (E.G., TOWNSHIP ENGINEER)
7. ROADWAYS SHALL BE CONSTRUCTED IN ACCORDANCE WITH THE SPECIFICATIONS OF BETHEL TOWNSHIP. IN THE ABSENCE OF A TOWNSHIP STANDARD, THE CURRENT PENNDOT STANDARDS FOR ROADWAY CONSTRUCTION SHALL BE UTILIZED.
8. THE INFORMATION SHOWN ON THIS DRAWING MAY HAVE ALSO BEEN PROVIDED IN A DIGITAL DRAWING FORMAT. ONCE A DRAWING IS RELEASED FROM STECKBECK ENGINEERING & SURVEYING, INC. IN A DIGITAL FORMAT, WE HAVE NO CONTROL OVER MANIPULATION OR MISUSE OF THE DATA CONTAINED IN THAT FILE. THE VIEWER IS THEREFORE CAUTIONED TO COMPARE ANY SUBSEQUENT REPRODUCTIONS OR MANIPULATIONS OF THIS DATA WITH THE ORIGINAL HARD COPY SEALED PLAN PROVIDED BY STECKBECK ENGINEERING & SURVEYING, INC. THE USER IS ALSO CAUTIONED THAT ANY USE OF THE DATA CONTAINED IN THE DIGITAL FILE THAT IS NOT SHOWN ON THE HARD COPY DRAWING, MUST BE AT THE RISK OF THE USER.
9. ALL CONSTRUCTION SHALL BE DONE IN ACCORDANCE WITH FEDERAL, STATE, COUNTY, AND TOWNSHIP STANDARDS AND REQUIREMENTS.
10. ALL JOINTS WHERE PROPOSED MACADAM MEETS EXISTING MACADAM SHALL BE SAW-CUT AND SEALED WITH PG 64S-22.
11. UTILITY TYPE AND LOCATION NOTICE: ALL EXISTING UTILITIES ARE SHOWN AS FOUND IN THE FIELD AND/OR ILLUSTRATED ON VARIOUS USER DRAWINGS. TO THE BEST OF OUR KNOWLEDGE THE LOCATIONS AND TYPES ARE CORRECT AND ACCURATE, BUT STECKBECK ENGINEERING & SURVEYING, INC. DOES NOT MAKE ANY REPRESENTATION, WARRANTY, ASSURANCE, OR GUARANTEE THE INFORMATION RECEIVED AND REFLECTED ON THESE DRAWINGS IS CORRECT OR ACCURATE. PURSUANT TO SECTION 5 CLAUSE (1) OF ACT 172 AMENDING ACT 287 IT SHALL BE THE RESPONSIBILITY OF THE CONTRACTOR TO ASCERTAIN THE LOCATION AND TYPE OF USERS LINES AT THE CONSTRUCTION SITE, EITHER BY INSPECTION OF THE DESIGNER'S DRAWING OR IF THERE BE NO SUCH DRAWINGS, THEN BY THE SAME MANNER AS THAT PRESCRIBED FOR A DESIGNER IN CLAUSE (1) AND (2) OF SECTION 4. PURSUANT TO SECTION 5 CLAUSE (2) IT WILL BE THE CONTRACTORS RESPONSIBILITY NOT LESS THAN THREE NOR MORE THAN TEN WORKING DAYS PRIOR TO THE DAY OF BEGINNING SUCH WORK, TO NOTIFY EACH USER OF THE CONTRACTOR'S INTENT TO PERFORM SUCH WORK AT ITS SITE OR SITES AND REQUEST THE INFORMATION PRESCRIBED BY [SUBCLAUSES II AND III] OR CLAUSE (5) OF SECTION 2, FROM EACH USER'S OFFICE DESIGNATED ON THE DESIGNERS DRAWINGS OR ON THE LIST OF USERS OBTAINED PURSUANT TO CLAUSE (1) OF SECTION 4.
12. STECKBECK ENGINEERING & SURVEYING, INC. HAS NOT PERFORMED ANY ARCHAEOLOGICAL STUDIES OR INVESTIGATIONS OF THIS SITE AND WE MAKE NO REPRESENTATION NOR WARRANTY THAT HISTORICAL OR ARCHAEOLOGICAL RESOURCES DO NOT EXIST ON THIS SITE. SUCH STUDIES ARE NOT A MUNICIPAL REQUIREMENT NOR ARE THEY NORMAL OR CUSTOMARY ENGINEERING TASKS PERFORMED FOR THE CONSTRUCTION SHOWN ON THESE PLANS. STECKBECK ENGINEERING & SURVEYING, INC. SHALL NOT BE RESPONSIBLE NOR LIABLE FOR THE IMPACTS OR COSTS TO THIS PROJECT IN THE EVENT THAT ANY ARCHAEOLOGICAL OR HISTORICAL RESOURCES ARE DISCOVERED DURING THE COURSE OF DEVELOPMENT OR CONSTRUCTION ON THIS SITE.
13. SITE IMPROVEMENTS AND CONSTRUCTION SHALL BE IN ACCORDANCE WITH THE EROSION AND SEDIMENT CONTROL DETAILS AND EROSION SEDIMENT CONTROL PLAN.

CONTRACTOR NOTES:

1. THE CONTRACTOR SHALL VERIFY ALL DIMENSIONS AND ELEVATIONS ON SITE PRIOR TO THE START OF CONSTRUCTION. UNDERGROUND UTILITIES HAVE BEEN SHOWN ACCORDING TO INFORMATION PROVIDED BY OTHERS AND MUST BE FIELD VERIFIED PRIOR TO CONSTRUCTION, EXCAVATION OR BLASTING. THE ACTUAL LOCATIONS OF THESE UTILITIES HAVE NOT BEEN FIELD VERIFIED AND THE LOCATIONS ARE APPROXIMATE. STECKBECK ENGINEERING & SURVEYING, INC. (SESI) DOES NOT MAKE ANY REPRESENTATION, WARRANTY, ASSURANCE OR GUARANTEE THAT THE UNDERGROUND UTILITY LOCATION INFORMATION PROVIDED BY OTHERS AND REFLECTED ON THESE DRAWINGS IS CORRECT AND ACCURATE. SESI ASSUMES NO LIABILITY FOR ANY DAMAGE INCURRED AS A RESULT OF UNDERGROUND UTILITIES OMITTED OR INACCURATELY SHOWN.
2. THE CONTRACTOR SHALL TAKE ALL NECESSARY PRECAUTIONS TO PROTECT THE EXISTING UTILITIES AND MAINTAIN UNINTERRUPTED SERVICE. DAMAGE TO ANY UTILITY SHALL BE REPAIRED TO THE SATISFACTION OF THE OWNER, UTILITY COMPANY OR AUTHORITY, AT THE CONTRACTOR'S EXPENSE.
3. THE CONTRACTOR IS RESPONSIBLE FOR ALL TESTING AND RECORD DRAWINGS AS MAY BE REQUIRED BY THE MUNICIPALITY AND/OR THE VARIOUS AUTHORITIES RELATIVE TO THE CONSTRUCTION SHOWN ON THESE PLANS.
4. THE CONTRACTOR IS RESPONSIBLE FOR ANY UTILITY RELOCATION COSTS REQUIRED TO CONSTRUCT THE PROPOSED BRIDGE.
5. THE CONTRACTOR SHALL BE RESPONSIBLE FOR ALL TRAFFIC CONTROL, TRENCH BARRICADING, COVERING, SHEETING AND SHORING, AS THE NEED ARISES.
6. IT WILL BE THE CONTRACTOR'S RESPONSIBILITY TO ENSURE THAT THE GRADING PLAN IS IMPLEMENTED CORRECTLY, THAT A MINIMUM COVER IS MAINTAINED OVER ALL UTILITY PIPES, AND THAT PROPER DRAINAGE IS PROVIDED DURING CONSTRUCTION.
7. THESE PLANS, PREPARED BY SESI, DO NOT EXTEND TO OR INCLUDE SYSTEMS PERTAINING TO THE SAFETY OF THE CONSTRUCTION CONTRACTOR, OF ITS EMPLOYEES, AGENTS OR REPRESENTATIVES IN THE PERFORMANCE OF THE WORK. THE SEAL OF STECKBECK ENGINEERING & SURVEYING, INC. (SESI) REGISTERED PROFESSIONAL HEREON DOES NOT EXTEND TO ANY SUCH SAFETY SYSTEMS THAT MAY NOW OR HEREAFTER BE INCORPORATED IN THESE PLANS. THE CONSTRUCTION CONTRACTOR SHALL PREPARE OR OBTAIN THE APPROPRIATE SAFETY SYSTEMS WHICH MAY BE REQUIRED BY OSHA.
8. CONTRACTORS SHALL NOT STORE CONSTRUCTION MATERIALS OR LOCATE TRASH RECEPTACLES (DUMPSTERS) ON PAVED CARTWAYS OF DEDICATED AND UNDEDICATED STREETS UNLESS EXPRESS PERMISSION IS GRANTED BY THE TOWNSHIP.
9. ALL MUD FROM CONSTRUCTION ACTIVITIES THAT GETS TRACKED ONTO STREETS, EITHER DEDICATED OR UNDEDICATED, SHALL BE CLEANED BY THE BUILDER/CONTRACTOR AT THE END OF EACH WORKDAY.
10. THE CONTRACTOR SHALL SUBMIT AND OBTAIN APPROVAL OF SHOP DRAWINGS FROM BETHEL TOWNSHIP AND THE TOWNSHIP ENGINEER FOR ALL MATERIALS. MATERIALS ORDERED PRIOR TO SHOP DRAWING APPROVAL ARE ORDERED AT THE CONTRACTOR'S RISK OF NOT BEING APPROVED.
11. DIGGING TEST PITS: IN LOCATIONS WHERE NEW UNDERGROUND UTILITIES ARE TO BE CONNECTED TO EXISTING UNDERGROUND UTILITIES, THE CONTRACTOR WILL NOT BE PERMITTED TO PROCEED WITH THE NEW CONSTRUCTION UNTIL HE HAS DUG TEST PITS AND DETERMINED THE EXACT LOCATION AND ELEVATION OF THE EXISTING UNDERGROUND UTILITIES. THE CONTRACTOR IS ADVISED THAT NO EXCAVATION IS PERMITTED IN THE UNDERGROUND UTILITY LOCATION WITHOUT THE PRESENCE OR WRITTEN APPROVAL OF AN AUTHORIZED REPRESENTATIVE OF THE OWNER OF THE SUBSURFACE UTILITY. DIG SUCH TEST PITS AT THE LOCATIONS AGREED TO BY THE OWNER OF THE SUBSURFACE UTILITY AND THE ENGINEER, AS SHOWN ON THE UTILITY PLAN SHEETS.
12. MATERIALS AND DETAILS SPECIFIED ON THE APPROVED PLAN SHALL NOT BE ALTERED DURING CONSTRUCTION WITHOUT WRITTEN APPROVAL BY THE TOWNSHIP.
13. CONTRACTOR IS RESPONSIBLE FOR REPAIRING/RESTORING ANY PROPERTY DAMAGED DURING CONSTRUCTION.



LOCATION MAP
SCALE 1"=500'

N

OWNER

BETHEL TOWNSHIP
60 KLAHR ROAD
BETHEL, PA 19507
PHONE: 717-933-8813

LIST OF DRAWINGS

COVER SHEET	1 OF 3
EX. COND., DEMO., & PROP. COND. PLANS	2 OF 3
DETAILS	3 OF 3

EROSION AND SEDIMENT CONTROL LIABILITY NOTE:
FAILURE TO CORRECTLY INSTALL SEDIMENT CONTROL FACILITIES OR FAILURE TO PREVENT SEDIMENT LADEN RUNOFF FROM LEAVING THE CONSTRUCTION SITE OR FAILURE TO TAKE CORRECTIVE ACTIONS TO IMMEDIATELY RESOLVE FAILURES OF SEDIMENT CONTROL FACILITIES MAY RESULT IN ADMINISTRATIVE, CIVIL AND/OR CRIMINAL PENALTIES BEING INSTITUTED BY THE PENNSYLVANIA DEPARTMENT OF ENVIRONMENTAL PROTECTION AS DEFINED IN SECTION 602 OF THE CLEAN STREAMS LAW OF PENNSYLVANIA. THE CLEAN STREAMS LAW PROVIDES FOR UP TO $10,000 PER DAY IN CIVIL PENALTIES, UP TO $10,000 IN SUMMARY CRIMINAL PENALTIES, AND UP TO $25,000 IN MISDEMEANOR CRIMINAL PENALTIES FOR EACH VIOLATION.

SEDIMENT TRACKED ONTO ANY PUBLIC ROADWAY OR SIDEWALK SHALL BE RETURNED TO THE CONSTRUCTION SITE BY THE END OF EACH WORK DAY AND DISPOSED IN THE MANNER DESCRIBED IN THIS PLAN. IN NO CASE SHALL THE SEDIMENT BE WASHED, SHOVELED OR SWEPT INTO ANY ROADSIDE DITCH, STORM SEWER, OR SURFACE WATER.

ALL EARTH DISTURBANCE ACTIVITIES SHALL PROCEED IN ACCORDANCE WITH THE FOLLOWING STAGING OF EARTHMOVING ACTIVITIES. EACH STAGE SHALL BE COMPLETED BEFORE A SUBSEQUENT STAGE IS INITIATED.

Construction will proceed in a timely manner in order to limit the potential for accelerated erosion and sedimentation. If the controls shown on the plan are incapable of addressing the erosion and sediment control problems on the lot, the owner/developer shall be responsible for adapting adequate alternative measures. The construction sequence for development of the project shall be as follows:

At least three (3) days before starting any earth disturbance activities, the contractor SHALL NOTIFY the Pennsylvania One Call System Incorporated at 1-800-242-1776 to locate buried utilities.

CULVERT REPLACEMENT

1. Install silt sock as indicated on the attached plan. Silt sock shall be installed along the contour at a level grade. Pump to divert stream around construction site as necessary to remove existing culvert. Contractor shall use a filter bag and pump if needed to pump water from work area.
2. Remove existing culvert, pavement (as necessary), and appurtenant items as shown on the plans. Contractor shall exercise extreme caution when removing the existing structures to avoid any discharge of debris into the stream. Contractor shall remove all debris from the stream if unavoidable. Immediately seed and straw all areas when possible.
3. Excavate as required to install new culvert pipe and endwalls. Backfill as necessary to final subgrade.
4. Install paving courses and associated subbase/subgrade.
5. Fine grade any remaining areas as shown on the grading plan. Spread 6-in of topsoil on freshly graded areas. Final passes during fine grading shall be made at right angles to the slopes. Prepare the remainder of the disturbed area for permanent stabilization. Seedbed shall be prepared in accordance with accepted practices. Seed mixture shall be applied in accordance with the manufacturer's rates and instructions.
6. Mulch all disturbed areas and seeded areas with hay or straw at a minimum rate of three (3) tons per acre (or mulch as a part of hydroseeding).
7. Remove all temporary erosion and sediment controls once the site is completely stabilized (defined as a minimum uniform 70% perennial vegetative cover, with a density capable of resisting accelerated erosion and sedimentation in all areas tributary to the controls). All areas disturbed during this process shall be stabilized immediately through seeding and mulching.
8. The operator shall remove from the site, recycle or dispose of all building materials and wastes in accordance with the Department's Solid Waste Management Regulations at 25 PA Code 260.1 et seq., 271.1 et seq., and 287.1 et seq. The contractor shall not illegally bury dump, or discharge any building material or wastes on or off the site.

NOTES:
1. UNDERGROUND UTILITIES ARE SHOWN ACCORDING TO INFORMATION PROVIDED BY OTHERS AND MUST BE FIELD VERIFIED PRIOR TO CONSTRUCTION, EXCAVATION OR BLASTING. THE ACTUAL LOCATIONS OF THESE UTILITIES HAVE NOT BEEN FIELD VERIFIED AND THE LOCATIONS ARE APPROXIMATE. STECKBECK ENGINEERING & SURVEYING, INC. DOES NOT MAKE ANY REPRESENTATION, WARRANTY, ASSURANCE, OR GUARANTEE THAT THE UNDERGROUND UTILITY LOCATION PROVIDED BY OTHERS AND REFLECTED ON THESE DRAWINGS ARE CORRECT AND ACCURATE. STECKBECK ENGINEERING & SURVEYING, INC. ASSUMES NO RESPONSIBILITY FOR ANY DAMAGES INCURRED AS A RESULT OF UTILITIES OMITTED OR INACCURATELY SHOWN.
2. THE RIGHT-OF-WAY FOR OLD ROUTE 22 (T-721) IS ASSUMED TO BE 33 FEET IN WIDTH, AS SHOWN, BASED UPON SECTION 2307 OF THE PENNSYLVANIA SECOND CLASS TOWNSHIP CODE (53 P.S. § 67307). NO RECORD DOCUMENTATION ESTABLISHING THE ACTUAL RIGHT-OF-WAY WIDTH WAS DISCOVERED. THE WIDTH SHOWN IS SUBJECT TO ANY GREATER RIGHT-OF-WAY PREVIOUSLY ESTABLISHED.

REVISION	DATE	BY

COVER SHEET
OLD ROUTE 22 CULVERT REPLACEMENT PROJECT
for
BETHEL TOWNSHIP
located in
Bethel Township
Berks County, Pennsylvania

SESI ENGINEERING SURVEYING
279 N. ZINNS MILL ROAD, LEBANON, PA 17042
717-272-7110 WWW.STECKBECK.NET

FIELD CREW:	---
BASE MAP:	PASDA
DRAWN:	AK
DESIGN:	JDS
CHECKED:	JDS
DATE:	10/23/2026
SCALE:	AS NOTED
PROJECT #036-26-010	

1
OF 3 SHEETS

LEGEND

EXISTING FEATURES

EXISTING CENTERLINE

EXISTING EDGE OF PAVEMENT

EXISTING RIGHT-OF-WAY

EXISTING CONTOURS

TO BE DEMOLISHED

GRAPHIC SCALE

10' 0 5' 10' 20' 40'

1 inch = 10 feet

North



EXISTING CONDITIONS & DEMOLITION PLAN

GRAPHIC SCALE

10' 0 5' 10' 20' 40'

1 inch = 10 feet

North



PROPOSED CONDITIONS PLAN

REVISION	DATE	BY

EXISTING CONDITIONS, DEMOLITION, & PROPOSED CONDITIONS PLANS

OLD ROUTE 22 CULVERT REPLACEMENT PROJECT

for

BETHEL TOWNSHIP

located in

Bethel Township

Berks County, Pennsylvania

SEI ENGINEERING SURVEYING

279 N. ZINNS MILL ROAD, LEBANON, PA 17042

717-272-7110 WWW.STECKBECK.NET

FIELD CREW:	---
BASE MAP:	PASDA
DRAWN:	AK
DESIGN:	JDS
CHECKED:	JDS
DATE:	10/23/2026
SCALE:	1"=10'
PROJECT	#036-26-010

2

OF 3 SHEETS

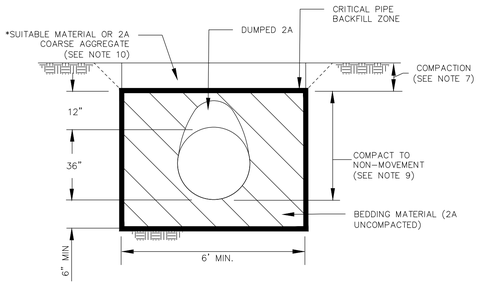

PIPE BACKFILL DETAIL

NO SCALE

NOTES

1. THE INSTALLATION OF PIPES 72" OR GREATER INSIDE DIAMETER OR SPAN IS PERMITTED WITHOUT PLACING EMBANKMENT FIRST. MAKE THE BACKFILL ENVELOPE AS SHOWN ON THIS DRAWING EXCEPT PROVIDE 2A MATERIAL ON EACH SIDE OF THE PIPE EQUAL TO ONE OUTSIDE DIAMETER OR SPAN OF THE PIPE.
2. A HIGHER STRENGTH PIPE THAN SPECIFIED MAY BE SUPPLIED AT NO ADDITIONAL COST TO THE TOWNSHIP.
3. PAYMENT FOR THE BACKFILL ENVELOPE INCLUDING BEDDING, COARSE AGGREGATE AND SUITABLE MATERIAL UP TO 12" ABOVE THE PIPE IS INCIDENTAL TO THE PIPE.
4. TO PRECLUDE POINT LOADING ON PIPE, DO NOT COMPACT 2A BEDDING MATERIAL.
5. FOR TRENCH BOX/SHORING INSTALLATION REQUIREMENTS REFER TO PENNDOT PUBLICATION 408, SECTION 601.
6. PERMIT PLACEMENT OF BACKFILL MATERIAL UP TO 10" LOOSE LAYERS IF USING A VIBRATORY COMPACTION ROLLER OR UP TO 12" LOOSE LAYERS USING A BACKHOE-MOUNTED HYDRAULIC PLATE COMPACTOR AS SPECIFIED IN PUUBLICATION 408, SECTION 601.3(f)3.
7. COMPACT TOP 3'-0" OF SUBGRADE TO 100% AS SPECIFIED IN PENNDOT PUBLICATION 408, SECTION 206.3. COMPACT 2A COARSE AGGREGATE TO NON-MOVEMENT AS PER NOTE 9. COMPACT SUITABLE MATERIAL TO MINIMUM 97% SPD.
8. COMPACT TO NON-MOVEMENT AS SPECIFIED IN PUBLICATION 408, SECTION 206.3(b)1.c.
9. USE 2A COARSE AGGREGATE OR SUITABLE MATERIAL AS SPECIFIED IN PUBLICATION 408, SECTION 601.3(f)3. ENGINEER SHALL MAKE FINAL DETERMINATION IF NATIVE BACKFILL IS ACCEPTABLE.
10. PLACE 2A COARSE AGGREGATE MATERIAL, IN 5" LOOSE LAYERS, ADJACENT TO THE LOWER HAUNCHES TO A HEIGHT OF 12" ABOVE TOP OF PIPE. COMPACT TO NON-MOVEMENT. TEST THE BACKFILL MATERIAL AND CONTINUE EMBANKMENT IN ACCORDANCE WITH PUBLICATION 408, SECTION 601.

* SUITABLE = MATERIAL CONTAINING NO DEBRIS, ORGANIC MATTER, FROZEN MATERIAL MATERIAL OR LARGE STONES WITH A DIAMETER GREATER THAN 2" IN SIZE. SUITABLE MATERIAL CAN ONLY BE USED AS SPECIFIED IN PUBLICATION 408, SECTION 601.3(f)3.

COARSE AGGREGATE (2A)

SPD = STANDARD PROCTOR DENSITY

*SUITABLE MATERIAL = MATERIAL CONTAINING NO DEBRIS, ORGANIC MATTER, FROZEN MATERIAL OR LARGE STONES WITH A DIAMETER GREATER THAN ONE-HALF THE THICKNESS OF THE COMPACTED LAYERS BEING PLACED.

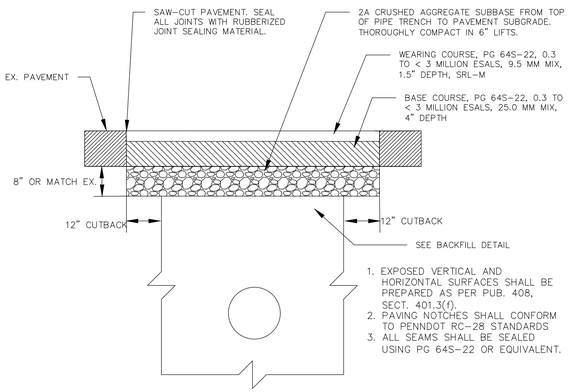

PAVEMENT RESTORATION DETAIL

NO SCALE

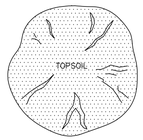

NOTE:

1) A STOCKPILE SHALL BE USED TO CONTAIN ALL STRIPPED TOPSOIL IN A LIMITED AREA IN ORDER TO KEEP DISTURBANCE TO A MINIMUM.
2) STOCKPILES ARE TO BE STABILIZED IMMEDIATELY.
3) STOCKPILE HEIGHTS MUST NOT EXCEED 35 FEET.
4) STOCKPILE SLOPES MUST BE 2:1 OR FLATTER.
5) STOCKPILES SHALL BE LOCATED SO THAT ALL SWALES CAN FUNCTION AS DESIGNED.

TOPSOIL STOCKPILE

NO SCALE

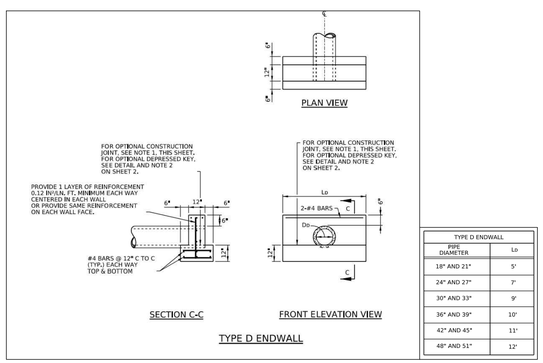

TYPE D ENDWALL	
PIPE DIAMETER	Lo
18" AND 21"	5'
24" AND 27"	7'
30" AND 33"	9'
36" AND 39"	10'
42" AND 45"	11'
48" AND 51"	12'

TYPE D ENDWALL DETAIL

NO SCALE

APPLICATION	SPECIES	% BY WEIGHT	MINIMUM % PURITY	MINIMUM % GERMINATION	MAX % WEED SEED	SEEDING RATE LB/1000 YD^2	SEEDING DATES
PENNDOT FORMULA B PERMANENT (REFINED LAWNS)	PERENNIAL RYE GRASS CREEPING RED FESCUE KENTUCKY BLUEGRASS MIXTURE	20 30 50	97 97 97	90 85 80	0.10 0.10 0.15	42.0 TOTAL 8.5 12.5 21.0	3/15 – 6/1 AND 8/1 – 10/15
PENNDOT FORMULA C PERMANENT (STEEP SLOPES NON-MOWED)	CROWNVETCH ANNUAL RYEGRASS	45 55	99 95	70* 90	0.10 0.10	12.0 TOTAL 5.5 6.5	CROWNVETCH: ANYTIME EXCEPT SEPTEMBER & OCTOBER RYEGRASS: 3/1 – 10/15
PENNDOT FORMULA D PERMANENT (STEEP SLOPES MOWED)	TALL FESCUE CREEPING RED FESCUE ANNUAL RYEGRASS	60 30 10	96 97 95	85 85 90	0.10 0.10 0.10	50.0 TOTAL 30.0 15.0 5.0	3/15 – 6/1 AND 8/1 – 10/15
PENNDOT FORMULA E TEMPORARY	ANNUAL RYEGRASS	100	95	90	0.10	10.0 TOTAL 10.0	3/15 – 10/15

* INCLUDING HARDSEED AND NORMAL SEEDLINGS.

SOIL SUPPLEMENTS SHALL BE APPLIED IN ACCORDANCE WITH SOIL TEST RECOMMENDATIONS. IN THE ABSENCE OF A SOIL TEST, APPLY SOIL SUPPLEMENTS AS FOLLOWS:

1. PREPARE AREAS FOR SEEDING BY UNIFORMLY APPLYING SUPPLEMENTS, EXCEPT IN AREAS THAT WILL RECEIVE FORMULA E SEED. DOCUMENT BULK DELIVERY AS SPECIFIED IN PENNDOT PUBLICATION 408, SECTION 804.2(A)2. BLEND THE INITIAL SOIL SUPPLEMENTS INTO THE SOIL AT LEAST 2 INCHES, ON TOPSOILED AREAS, BY RAKING, DISKING, HARROWING, OR OTHER ACCEPTABLE METHODS. BLEND THE SUPPLEMENTS INTO THE SOIL DURING TILLAGE OPERATIONS. APPLY SLOW-RELEASE NITROGEN FERTILIZER TO THE SURFACE OF FORMULA B, D, L, AND W SEEDED AREAS BEFORE PROJECT COMPLETION. DO NOT APPLY SLOW-RELEASE NITROGEN FETRILIZER SUPPLEMENT TO FORMULA C SEEDED AREAS.
   A. PULVERIZED AGRICULTURAL LIMESTONE AT 800 LBS./1000 S.Y.
   B. 10-20-20 ANALYSIS COMMERCIAL FERTILIZER AT 140 LBS./1000 S.Y.
   C. 38-0-0 UREAFORM FERTILIZER AT 50 LBS./1000 S.Y. OR 32-0-0 TO 38-0-0 SULFUR COATED UREA FERTILIZER AT 50-59 LBS./1000 S.Y. OR 31-0-0 IBDU FERTILIZER AT 61 LBS./1000 S.Y.
2. SPECIFICATION ITEMS OBTAINED USING PENNDOT PUBLICATION 408
3. ALL SEEDED AREAS SHALL BE MULCHED WITH HAY OR STRAW AT A MINIMUM RATE OF 1200 LBS./1000 S.Y. MULCH TO BE ANCHORED WITH WOOD CELLULOSE FIBER AT A RATE OF 160 LBS./1000 S.Y.
4. FORMULA W (CONSERVATION) MIX TO BE APPLIED AS INDICATED ON PLAN OR IF SITE CONDITIONS WARRANT. INOCULATE LEGUMES AS INDICATED IN PENNDOT PUB. 408, SECTION 804.
5. ALL AREAS RECEIVING SEEDING SHALL HAVE A MINIMUM OF 6" OF ORGANIC TOPSOIL.

SEEDING SPECIFICATIONS

NOT TO SCALE

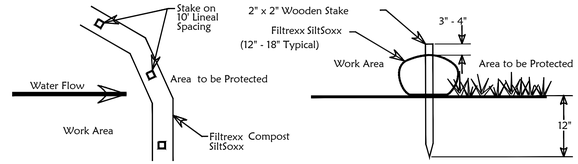

PLAN VIEW

CONTACT INFO:
RIVER VALLEY ORGANICS
1178 NURSERY ROAD
WRIGHTSVILLE, PA 17368
717-252-1894

SECTION VIEW

NOTES:
1. ALL MATERIAL TO MEET FILTREXX SPECIFICATIONS.
2. SILTSOXX COMPOST/SOIL/ROCK/SEED FILL TO MEET APPLICATION REQUIREMENTS.
3. SILTSOXX DEPICTED IS FOR MINIMUM SLOPES. GREATER SLOPES MAY REQUIRE LARGER SOCKS PER THE ENGINEER.
4. COMPOST MATERIAL TO BE DISPERSED ON SITE, AS DETERMINED BY THE ENGINEER.

SILT SOXX MAINTENANCE NOTES:
1. THE CONTRACTOR SHALL MAINTAIN THE SILTSOXX IN A FUNCTIONAL CONDITION AT ALL TIMES AND IT SHALL BE ROUTINELY INSPECTED.
2. IF THE SILTSOXX HAS BEEN DAMAGED, IT SHALL BE REPAIRED, OR REPLACED IF BEYOND REPAIR.
3. THE CONTRACTOR SHALL REMOVE SEDIMENT AT THE BASE OF THE UPSLOPE SIDE OF THE SILTSOXX WHEN ACCUMULATION HAS REACHED 1/2 OF THE EFFECTIVE HEIGHT OF THE SILTSOXX, OR AS DIRECTED BY THE LEBANON COUNTY CONSERVATION DISTRICT. ALTERNATIVELY, A NEW SILTSOXX CAN BE PLACED ON TOP OF AND SLIGHTLY BEHIND THE ORIGINAL ONE CREATING MORE SEDIMENT STORAGE CAPACITY WITHOUT SOIL DISTURBANCE.
4. SILTSOXX SHALL BE MAINTAINED UNTIL DISTURBED AREA ABOVE THE DEVICE HAS BEEN PERMANENTLY STABILIZED AND CONSTRUCTION ACTIVITY HAS CEASED.
5. THE FILTERMEDIA WILL BE DISPERSED ON SITE ONCE DISTURBED AREA HAS BEEN PERMANENTLY STABILIZED, CONSTRUCTION ACTIVITY HAS CEASED, OR AS DETERMINED BY THE LEBANON COUNTY CONSERVATION DISTRICT.
6. FOR LONG-TERM SEDIMENT AND POLLUTION CONTROL APPLICATION, SILTSOXX CAN BE SEEDED AT THE TIME OF INSTALLATION TO CREATE A VEGETATIVE FILTERING SYSTEM FOR PROLONGED AND INCREASED FILTRATION OF SEDIMENT AND SOLUBLE POLLUTANTS (CONTAINED VEGETATIVE FILTER STRIP). THE APPROPRIATE SEED MIX SHALL BE DETERMINED BY THE DESIGN PROFESSIONAL.

FILTER SOCK DETAIL

NO SCALE

REVISION	DATE	BY

DETAILS

OLD ROUTE 22 CULVERT REPLACEMENT PROJECT

BETHEL TOWNSHIP
located in
Bethel Township
Berks County, Pennsylvania

SEI ENGINEERING SURVEYING
279 N. ZINNS MILL ROAD, LEBANON, PA 17042
717-272-7110 WWW.STECKBECK.NET

FIELD CREW:	---
BASE MAP:	PASDA
DRAWN:	AK
DESIGN:	JDS
CHECKED:	JDS
DATE:	10/23/2026
SCALE:	AS NOTED
PROJECT #036-26-010	