PROJECT MANUAL

INCLUDING SPECIFICATIONS FOR CONSTRUCTION OF

7214 MAITLAND LANE PROJECT

MECKLENBURG COUNTY

NORTH CAROLINA

Mecklenburg County
Storm Water Services
2145 Suttle Avenue
Charlotte, NC 28208
980-721-3571
Heather S. Davis

Table of Contents

NOTICE TO BIDDERS 2
INSTRUCTION TO BIDDERS 4
1. SCOPE OF WORK 4
2. FAMILIARITY WITH WORK AND CONDITIONS 4
3. FAMILIARITY WITH LAWS, ETC. 4
INDEMNIFICATION 5
INDEMNITY AND INSURANCE 6
INSURANCE REQUIREMENTS 6
REQUIRED BID DOCUMENTS 8
FORMS 9
ATTACHMENT 1 – FORM OF PROPOSAL 9
BID TAB (PART OF ATTACHMENT 1) 9
BID BOND (PART OF ATTACHMENT 1) 9
INSURANCE CERTIFICATE (PART OF ATTACHMENT 1) 9
PROJECT EXPERIENCE (PART OF ATTACHMENT 1) 9
CONTRACTOR E-VERIFY DECLARATION (PART OF ATTACHMENT 1) 9
NON-DISCRIMINATION IN EMPLOYMENT (PART OF ATTACHMENT 1) 9
REFERENCED MATERIALS 9
ATTACHMENT 2 – 7214 MAILAND LANE_PLANS_09-26-2025 9
ATTACHMENT 3 – SPECIFICATION FOR CORRUGATED METAL PIPE (CMP), ALUMINIZED STEEL TYPE 2 9
ATTACHMENT 4 – CMP DESIGN GUIDE 9
ATTACHMENT 5 – CMP INSTALLATION GUIDE 9
ATTACHMENT 6 – SPL-1 SEEDING AND MULCHING 9
ATTACHMENT 7 – SP-1 PUMP AROUND OPERATION 9
ATTACHMENT 8 9
EXAMPLE CONTRACT 9

Notice to Bidders

Sealed proposals will be received until 11:00 AM on Thursday, January 7, 2027, in the office of **Charlotte-Mecklenburg County Storm Water Services, 2145 Suttle Avenue, Charlotte, NC 28208** for the construction of the **7214 Maitland Lane Project – Tax ID 11133155** at which time and place, all properly submitted Bids will be opened and read aloud on the **Fourth Floor, LUE-Woods Conference Room**. Proposals must be made on standard forms furnished by the County. No verbal or electronic bids will be accepted. Bidders or their authorized agents and other interested parties are invited to attend.

An electronic version of the plans and specifications was emailed out to the contractors and listed on the NC eProcurement Website.

Interested bidders are advised to submit contact information to the County's Project Manager:

For information regarding this project contact:

Heather Davis, Project Manager
Charlotte-Mecklenburg Storm Water Services
2145 Suttle Avenue
Charlotte, NC 28208
980-721-3571 mobile
Heather.Davis@MeckNC.gov

If a contractor obtains a set of Contract Documents (plans and specifications) from any source other than the County's **Authorized personnel**, it will be that contractor's responsibility to obtain any addenda. If a contractor bids any portion of these plans without receiving the full and complete set of plans and specifications, they will do so at their own risk. If such bid is accepted by the County, the Contractor is liable for all work as described in the Plans, Specifications, and Addenda.

Bid, Performance, and Payment & Material bonds shall be required for this project.

Each bid that equals or exceeds $50,000.00 shall be accompanied by a corporate bid bond or a bid deposit of a certified or cashier's check in the amount of **at least 5% of the total amount bid for the contract**. When a bid is secured by a bid deposit (certified check or cashier's check), the execution of a bid bond will not be required. When the bid security is in the form of a bid bond, that bid bond shall be executed by a corporate surety.

The laws of North Carolina and applicable regulations of various Licensing Boards and BDI provisions will be observed in receiving bids and awarding contracts.

A non-mandatory pre-bid meeting shall be held at 11:00 AM on Thursday, December 3, 2026, across the street from 7214 Maitland Lane, Charlotte, NC 28215, Tax ID 11133155.

Mecklenburg County reserves the right to reject any or all proposals and to waive informalities or technicalities, as it may deem to be in its best interest.

Upon request, this information will be made available in an alternative format for persons with disabilities. Please call 980-314-3324 for assistance.

Bidders will provide **North Carolina General Contract License Number**, Classification(s), and Limits in the space provided in the signature page of the bid.

Bids may be held by the County for a period not to exceed one hundred twenty (120) days from the date of the bid opening for the purpose of reviewing bids and investigating qualifications of bidders.

The itemized proposal form and Project Manual provided by the County shall be used in its entirety. All entries, including signatures, shall be in ink.

Delivery of Bids: Each proposal must be complete and independent including bid proposal forms, bid security, and all other required forms listed in the Project Manual. Each proposal must be submitted in (2) opaque adhesively sealed envelopes, to conceal its contents as follows:

a. **Inner Envelope**-The inner Envelope shall contain all bidding documents indicated in **INSTRUCTIONS TO BIDDERS, 8. PROPOSAL FORMS** with the exception of the Bid Bond. The name of the Bidder, their address and license number shall be marked on the outside of the Inner Envelope.

b. **Outer Envelope**- The Outer Envelope shall contain the sealed Inner Envelope and the Bid Bond. The Project Name and Bid Date shall be marked on the outside of the sealed Outer Envelope as well as the address for submission as indicated in the **NOTICE TO BIDDERS.**

BID FOR: _____

Project Name (Enter the project name as shown on the Bid Documents)

BIDDER'S NAME: _____

Contractor's Name (Full name of Contractor submitting the bid)

DO NOT OPEN UNTIL: _____

Bid Opening Date & Time (Enter the date & time as shown on the Bid Documents)

Instruction to Bidders

1. SCOPE OF WORK

This project shall consist of furnishing all labor, materials, and equipment, and performing all work necessary to support the **7214 Maitland Lane Project** in Mecklenburg County, North Carolina. Work shall be conducted in accordance with the enclosed documents and on-site instructions provided by the Engineer (also referred to as County), Owner (County) and/or their representative and will include, but may **not be limited to: Mobilization, temporary construction entrance, Erosion Control and Sediment Control measures, demolition/removal of failed pipe, clearing/grading, storm drainage installation, foundation conditioning, catch basin/masonry drainage structures, backfill/select material, restore pit gravel trail, etc.** For the purposes of these documents, the "Owner" is assumed to be a representative of Mecklenburg County.

2. FAMILIARITY WITH WORK AND CONDITIONS

Before preparing Bids, Bidders are urged to visit the site to inform and familiarize themselves with all site conditions under which the project will be constructed and apparatus erected and installed. The Owner will not be responsible for payments to the Contractor other than as detailed in the Construction Contract. Should construction conditions be different from those assumed or contemplated by the Contractor. The Contractor is required to satisfy himself, prior to bidding, as to the correctness of the site as indicated by the Contract Documents.

3. FAMILIARITY WITH LAWS, ETC.

The Bidder shall be familiar with all Federal, State and Local Laws, and ordinances and regulations, which may in any manner affect those engaged or employed in Work, or the materials or equipment in or upon the Work, or in any way affect the conduct of the Work. No pleas of misunderstanding will be considered because of the ignorance thereof. If the Bidder or Contractor shall discover any provisions in the plans, specifications or Construction Contract (hereinafter sometimes referred to as "Contract") which are contrary to, or inconsistent with, any such law, ordinance, or regulation, he shall immediately report it to the County in writing before the bid opening.

The Contractor, and his subcontractors performing work at the worksite, will be required to comply with the Occupational Safety and Health Standards and the Safety and Health Regulations for Construction.

Indemnification

To the fullest extent permitted by law, the contractor shall indemnify, defend and hold harmless each of the "Indemnities" (as defined below) from and against any and all "Charges" (as defined below) paid or incurred any of them as a result of any claims, demands, lawsuits, actions, or proceedings: (i) alleging violation, misappropriation or infringement of any copyright, trademark, patent, trade secret or other proprietary rights with respect to the Work or any products or deliverables provided to the County pursuant to this contract ("Infringement Claims"); (ii) seeking payment for labor or materials purchased or supplied by the Contractor or its subcontractors in connection with this Contract; or (iii) arising from the Contractor's failure to perform its obligations under this Contract, or from any act of negligence or willful misconduct by the Contractor or any of its agents, employees or subcontractors relating to this Contract, including but not limited to any liability caused by an accident or other occurrence resulting in bodily injury, death, sickness or disease to any person(s) or damage or destruction to any property, real personal, tangible or intangible; or (iv) alleging violation of any federal, state or local law or regulation by the Contractor or any of the Contractor's subcontractors; or (v) alleging that an employee or subcontractor of the Contractor is an employee of the County, including but not limited to claims relating to worker's compensation, failure to withhold taxes and the like. For purposes of this Section: (a) the term "Indemnities" means the County and each of the County's officers, officials, employees, agents and independent contractors (excluding the Contractor); and (b) the term "Charges" means any and all losses, damages, costs, expenses (including reasonable attorneys' fees), obligations, duties, fines, penalties, royalties, interest charges and other liabilities (including settlement amounts). If an Infringement Claim occurs, the Contractor shall either: (i) procure for the County the right to continue using the affected product or service; or (ii) repair or replace the infringing product or service so that it becomes non-infringing, provided that the performance of the overall product(s) and service(s) provided to the County shall not be adversely affected by such replacement or modification.

If the Contractor is unable to comply the preceding sentence within thirty days (30) after the County is directed to cease use of a product or service, the Contractor shall promptly refund to the County all amounts paid under this Contract.

Indemnity and Insurance

INDEMNITY & INSURANCE: The Contractor shall indemnify and save harmless the Owner, its agents and employees and assigns from and against all loss, cost, damages, expense, and liability caused by an accident or other occurrence resulting in bodily injury, including death, sickness, and disease to any person; or damage or destruction to property, real or personal; arising directly or indirectly from operations, products, or services rendered under this Contract. The Contractor further agrees to purchase and maintain during the life of this Contract with an insurance company acceptable to the Owner authorized to do business in the State of North Carolina the following insurance:

INSURANCE REQUIREMENTS

Contractor's Liability and Other Insurance: The Contractor shall purchase and maintain with a company acceptable to the County and authorized to do business in the State of North Carolina, such insurance as will protect him from claims under workers' compensation laws, disability benefit laws or other similar employee benefit laws; from claims of damages because of bodily injury, occupational sickness or disease, or death of his employees; from claims for damages because of bodily injury and personal injury; and from claims for damage and destruction of tangible property, including loss of use resulting there-from – any or all of which may arise out of or result from the Contractor's operations under the Contract Documents, whether such operations be by himself or any subcontractor or anyone directly or indirectly employed by any of them or for whose acts any of them may be legally liable.

When certain work is performed inside rights-of-way owned by railroads, North Carolina Department of Transportation or other agencies, both the Contractor and any subcontractors may be required to furnish individual insurance certificates made in favor by the controlling agency, with limits established by that agency. See Insurance Requirements for other agencies in permits included at the end of this section under Other Insurance Requirements.

SUPPLEMENTARY CONDITIONS. Contractor is responsible for obtaining any additional, necessary insurance.

The insurance shall be written for not less than the limits of liability specified below.

Automobile: Bodily injury and property damage liability covering all owned, non-owned, and hired automobiles for limits of not less than $1,000,000 each person, $1,000,000 each occurrence bodily injury liability, and $1,000,000 each occurrence property damage liability.

Comprehensive General Liability: Bodily injury and property damage liability insurance as shall protect the Contractor and any Subcontractor performing Work under this Contract from claims of bodily injury or property damage which arise from operations of this Contract whether such operations be performed by the Contractor, any Subcontractor, or anyone directly or indirectly employed by either. The amounts of such insurance shall not be less than $1,000,000 bodily injury and property damage liability for each occurrence/aggregate. This insurance shall include coverage for products/completed operations, and contractual liability assumed under the indemnity provision of this Contract. To be included in Comprehensive General Liability is the Broad Form Property Damage. On the policy, list “Mecklenburg County” as an "Additional Insured".

Workman's Compensation & Occupational Disease Insurance:
Meeting the statutory requirements of the State of North Carolina including employer’s liability insurance for an amount of not less than $500,000 for each accident, $500,000 for disease each employee, and $500,000 for policy limit.

Professional Errors & Omissions: Insurance with a limit of not less than $1,000,000 per claim occurrence as shall protect the contractor and the contractor’s employees for negligent acts, errors or omissions in performing the professional services under this contract.

Builder's Risk Insurance: The Owner shall purchase and maintain "all risk" Builder's Risk Insurance, including, without duplication of coverage, theft, vandalism, and malicious mischief. This insurance shall cover the entire Work at the site to which the Contract applies, to the full insurable value thereof and shall be for the benefit of the Owner and Contractor as their interest may appear, except that any loss not covered because of deductible clauses or policy exclusions shall be the sole responsibility of the Contractor.

The Owner’s Builder’s Risk Insurance shall not cover the Contractor’s:
1. Tools
2. Equipment
3. Storage shed or office
4. Vehicles

Other Insurance Requirements:
a) The Owner shall be exempt from and in no way liable for any sums of money which may represent a deductible in any insurance policy. The payment of such deductible shall be the sole responsibility of the Contractor and/or subcontractor providing such insurance;
b) Mecklenburg County shall be named as an additional insured under the general and automobile liability insurance policies;
c) The contractor shall be responsible for notifying Mecklenburg County of any material changes (including renewals) to or cancellation of the insurance

coverages required above. Notice to Mecklenburg County must be completed in writing within **48 hours** of the changes;
d) Should any of the required insurance coverages be self-insured by the contractor, a copy of the Certificate of Self-Insurance or other documentation from the North Carolina Department of Insurance shall be furnished to the owner;
e) If any part of the work under the Agreement is sublet, **the subcontractor shall be required to meet all insurance requirements** set forth in the Agreement. Nothing contained herein shall relieve the Contractor from meeting all insurance requirements or otherwise being responsible for the subcontractor

Certificates of such insurance shall be furnished to the Owner and shall contain the provision that should any of the above described polices be cancelled before the expiration date thereof, the issuing insurance company will endeavor to mail **thirty (30)** days written notice to "Mecklenburg County". The Contractor agrees to notify the Owner by telephone and by providing written notice within **two (2) days** after receipt of information that the insurance company either intends to amend or terminate a policy or has amended or terminated any insurance policy providing the coverage referred to above.

Required Bid Documents

All forms included in the bidding documents shall be completed in ink or be typewritten. Both words and figures shall be indicated on the bid proposal form. If there is a discrepancy between the wording and the figures, the wording shall govern. With each bid, the contractor shall include**: Bid Proposal Form, Execution of Bid, Certification of Non-Discrimination in Employment (ADA Compliance), Contractor E-Verify Declaration, and Insurance Certificate**.

****END OF GENERAL CONDITIONS OF CONTRACT****

FORMS

Attachment 1 – Form of Proposal

Bid Tab (part of attachment 1)

Bid Bond (part of attachment 1)

Insurance certificate (part of attachment 1)

Project Experience (part of attachment 1)

Contractor E-Verify declaration (part of attachment 1)

Non-Discrimination in employment (part of attachment 1)

REFERENCED MATERIALS

Attachment 2 – 7214 Mailand Lane_Plans_09-26-2025

Attachment 3 – Specification for Corrugated Metal Pipe (CMP), Aluminized Steel Type 2

Attachment 4 – CMP Design Guide

Attachment 5 – CMP Installation Guide

Attachment 6 – SPL-1 Seeding and Mulching

Attachment 7 – SP-1 Pump Around Operation

Attachment 8

EXAMPLE CONTRACT

F O R M OF P R O P O S A L

7214 Maitland Lane Project – Tax ID 11133155 Bidder: _____

Mecklenburg County, North Carolina Date: _____

The undersigned, as bidder, hereby declares that the only person or persons interested in this proposal as principal or principals is or are named herein and that no other person than herein mentioned has any interest in this proposal or in the contract to be entered into; that this proposal is made without connection with any other person, company or parties making a bid or proposal; and that it is in all respects fair and in good faith without collusion or fraud. The bidder further declares that he has examined the site of the work and the contract documents relative thereto and has read all special provisions furnished prior to the opening of bids; that he has satisfied himself relative to the work to be performed.

The Bidder proposes and agrees if this proposal is accepted to contract with Mecklenburg County in the form of contract specified below, to furnish all necessary materials, equipment, machinery, tools, apparatus, means of transportation and labor necessary to complete the construction of:

7214 Maitland Lane Project – Tax ID 11133155

in full in complete accordance with the plans, specifications, and contract documents, to the full and entire satisfaction of Mecklenburg County with a definite understanding that no money will be allowed for extra work except as set forth in the Contract Documents, for the sum of:

_____

Time of Completion and Liquidated Damages:

Bidder hereby agrees to fully complete the project within 120 consecutive calendar days after the Notice to Proceed. Bidder also agrees to pay $250.00 as liquidated damages for each consecutive day beyond the date of completion.

CONTRACT:

Base Bid (not including contingency):

_____ Dollars($) _____

Total Bid, Base (including contingency):

_____ Dollars($) _____

General Subcontractor:

Name: _____ License No. _____

UNIT PRICES

Unit prices quoted and accepted shall apply throughout the life of the contract, except as otherwise specifically noted. Unit prices shall be applied, as appropriate, to compute the total value of changes in the scope of the work all in accordance with the contract documents.

The bidder further proposes and agrees hereby to commence work under this contract on a date to be specified in a written order of the designer and shall fully complete all work there under within the time specified in the Supplementary General Conditions.

Proposal Signature Page

The undersigned further agrees that in the case of failure on his part to execute the said contract and the bonds within ten (10) days after being given written notice of the award of contract, the certified check, cash or bid bond accompanying this bid shall be paid into the funds of the owner's account set aside for the project, as liquidated damages for such failure; otherwise the certified check, cash or bid bond accompanying this proposal shall be returned to the undersigned.

Respectfully submitted this day of _____ (date)

_____
(Name of firm or corporation making bid)

WITNESS:

By: _____
Signature

_____
(Proprietorship or Partnership)

Name: _____
Print or type

Title: _____
(Owner/Partner/Pres.N.Pres)

Address: _____

ATTEST:

_____

By: _____

License No. _____

Title: _____
(Corp. Sec. or Asst. Sec. only)

Federal I.D. No. _____

(CORPORATE SEAL)

Addendum received and used in computing bid:

Addendum No. 1 _____ Addendum No. 3 _____ Addendum No. 5 _____ Addendum No. 7 _____

Addendum No. 2 _____ Addendum No. 4 _____ Addendum No. 6 _____ Addendum No. 8 _____

BID TABULATION FOR
7214 MAITLAND LANE – PROJECT
– Tax ID 11133155

MECKLENBURG COUNTY, NORTH CAROLINA MECKLENBURG COUNTY STORM WATER SERVICES 8/14/2026

Item	*Section*	*ITEM DESCRIPTION*	*Qty*	*Unit*	*Unit Price*	*Amount*
1	**800**	**Mobilization**	**1**	**LS**		
2	**226**	**Comprehensive Grading**	**1**	**LS**		
3	**230**	**Borrow Excavation**	**150**	**CY**		
4	**265**	**Select Granular Material**	**110**	**TN**		
5	**300**	**Foundation Conditioning Material, Minor Structures**	**60**	**TN**		
6	**300**	**Foundation Conditioning Geotextile**	**90**	**SY**		
7	**310**	**66” Spiral Rib Pipe (0.109” thick), Aluminized Steel Type 2**	**20**	**LF**		
8	**840**	**Masonry Drainage Structures, NCDOT Std. 840.32**	**17**	**CY**		
9	**840**	**Manhole Frame and Cover, NCDOT Std. 840.54**	**2**	**EA**		
10	**876**	**Geotextile for Drainage, Type 2 (Construction Entrance)**	**100**	**SY**		
11	**1610**	**Stone for Erosion Control, Type 2 (Construction Entrance)**	**100**	**SY**		
12	**SPL-1**	**Seeding and Mulching**	**90**	**SY**		
13	**SP-1**	**Pump-Around Operation**	**10**	**DA**		
14						
15				**SUBTOTAL**		
16				**10% Contingency**		
17				**TOTAL BASE BID**		
18						

BONDS AND CERTIFIED POWER OF ATTORNEY

(Attach Bond and Power of Attorney to this sheet)

INSURANCE CERTIFICATE

(Attach Certificate to This Sheet)

PROJECT EXPERIENCE

APPLICANT'S LICENSES, CERTIFICATES, and/or RELEVANT COURSE WORK

Provide information on licenses, certificates, or relevant course work necessary for the type of work the applicant company will perform.

Type of License, Certificate, or Course Work	Firm or Individual's Name	License No.	Expiration Date

EXPERIENCE ON SIMILAR COMPLETED PROJECTS

List at least three (3) projects that involved similar stream restoration and/or enhancement work successfully completed in the past (5) five years. Provide project name, location, owner/client contact information, restored length and/or a brief explanation of scope of work. Indicate what level of effort was provided by your own forces. It is preferable that listed projects be located in the NC Piedmont or a similar hydro physiographic region.

PROJECT NAME	PROJECT INFO & DESCRIPTION

PROJECT NAME	PROJECT INFO & DESCRIPTION

STATE OF NORTH CAROLINA

COUNTY OF MECKLENBURG

CONTRACTOR E-VERIFY DECLARATION

I,_____(the individual attesting below), being duly authorized by and on behalf of _____

(the entity contracting with the County, hereinafter "Employer/Contractor") AFFIRMS AND DECLARES as follows:

1. Employer/Contractor understands that E-Verify is a federal program operated by the United States Department of Homeland Security and other federal agencies, or any successor or equivalent program used to verify the work authorization of newly hired employees pursuant to federal law in accordance with NCGS §64-25(5).
2. Pursuant to NCGS §l53A-449(b) and NCGS § 64-26(a), any Employer/Contractor that transacts business in this State and employs 25 or more employees in this State entering into a contract with the County is required to verify the work eligibility status of all newly hired employees through the E-verify program.
3. Employer/Contractor is a person, business entity, or other organization that transacts business in this State and employs 25 or more employees in this State. (check Yes or No)
   a. YES_____, or
   b. NO _____
4. For Employers/Contractors who employ 25 or more employees in the State and are therefore subject E-Verify, the undersigned verifies the Employer's/Contractor's compliance with the requirements of Article 2 of Chapter 64 of the North Carolina General Statutes.
5. Employer's subcontractors on this County Project that employ 25 or more employees in this State must also comply with E-Verify, and if Employer is the successful contractor on this Project, Employer agrees that it will ensure compliance with E-Verify by any subcontractors used by Employer/Contractor on this County Project.
6. I hereby declare under penalty of perjury that the foregoing is true and correct.

This_____day of_____, 20____

_____

Signature of Declarant

Print or Type Name: _____

CERTIFICATION OF NON-DISCRIMINATION IN EMPLOYMENT

The undersign, being a licensed Contractor in North Carolina, do hereby certify that we will not discriminate against employee or applicant for employment because of race, color, religion, sex, or national origin. We will take affirmative action to ensure that applicants are employed, and that employees are treated equal during employment without regard to race, color, or religion, or handicap. Such action shall include, but not be limited to, the following: employment, upgrading, demotion, or transfer' recruitment or recruitment advertising, layoff or termination; rates of pay or other forms of compensation' and selection for training, including apprenticeship. We will agree to post in conspicuous places, available to employees and applicants for employment, notices to be provided by the Local Public Agency setting forth the provisions of this non-discrimination clause.

_____

Signed

_____

Print or Type Name ofSigning Official

_____

Title

_____

Firm

_____

Address

ATTACHMENT 2

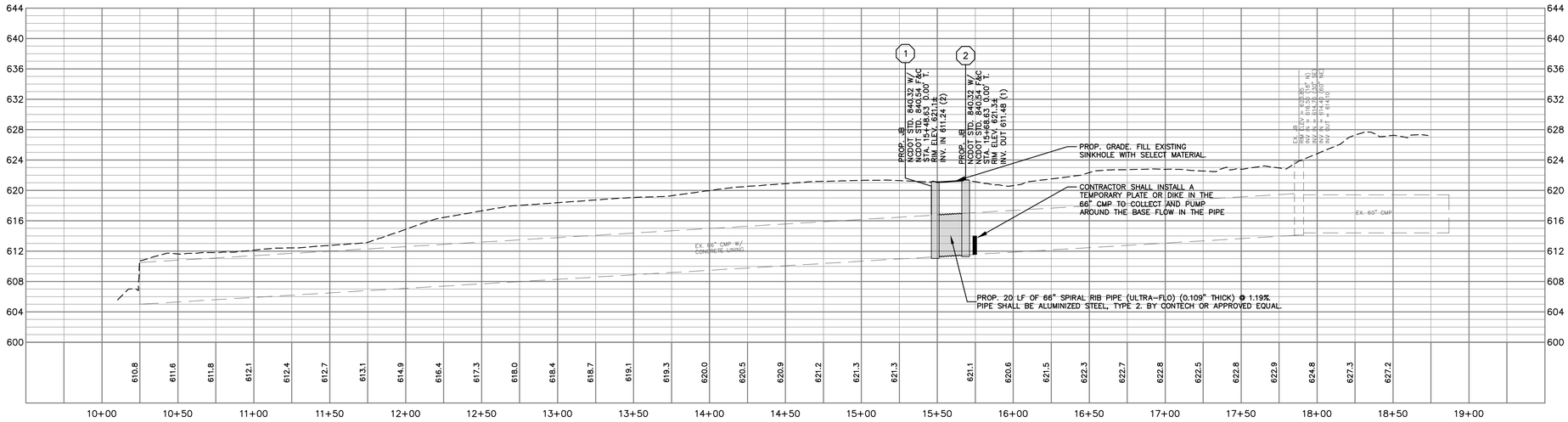

LINE L1 - PROFILE VIEW

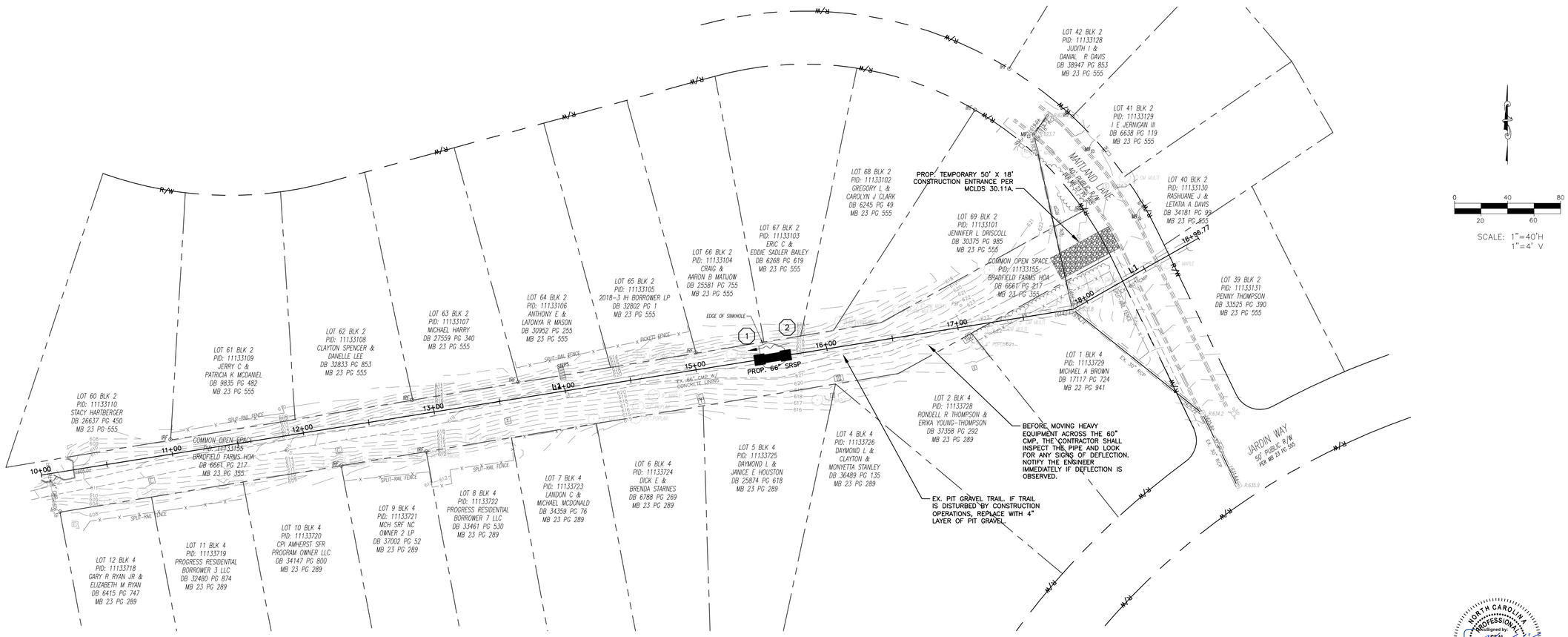

NORTH CAROLINA PROFESSIONAL ENGINEER SEAL 15903 ROBERT E. WILSON
Digitally signed by
12ZDDA0B8B4F5...
9/26/2025

Plans Prepared By:
LaBella
Powered by partnership.
400 S. Tryon Street, Suite 1300
Charlotte, NC 28285
(704) 376-6423
N.C. License # C-0430
labellapc.com

NO.	DATE	BY	DESCRIPTION

Charlotte-Mecklenburg STORM WATER Services

SCALE

PROJECT NUMBER 225102

B:\GLOBAL\Projects\Mecklenburg County\225102 – 7214 Maitland Ln Water &Sewer Extension\Design\Roadway\PLAN_CADD_1.dwg
CAD FILE PATH

PREPARER JAB
CHECK REW
APPROVER REW
08/01/2025

7214 MAITLAND LANE
DRAINAGE IMPROVEMENTS

PLAN & PROFILE

SHEET 1 OF 2

NAME	SYMBOL
Existing Property Line	
Proposed R/W Line	
Maintained as R/W Line	
Existing Structures	
Proposed Edge of Pavement	
Existing Unknown Utility	UNK
Existing Fiber Optic	FO
Temporary Construction Easement	e
Proposed Storm Drainage Easement	SDE
Existing Bottom of Bank	TOE
Existing Top of Bank	TOB
Existing Gas Service	GS
Existing Gas Line	G
Existing Water Service	WS
Existing Water Line	W
Existing Sanitary Sewer	SS
Existing Underground Telecom	UT
Existing Underground Electric	UE
Existing Overhead Electric	OE
Existing Storm Drainage	
Proposed Storm Drainage	
CIPP Pipe Liner	
Existing Tree	
Existing Water Meter	WM
Existing Water Valve	WV / GV

NAME	SYMBOL
Existing Sanitary Sewer Manhole	S
Proposed Sanitary Sewer Manhole	S
Existing Storm Drain Manhole	D
Proposed Junction Box	D
Existing Catch Basin	
Proposed Catch Basin	
Existing Drop Inlet	
Proposed Drop Inlet	
Existing/Proposed Telephone Manhole	T / T
Existing/Proposed Electric Manhole	E / E
Existing/Proposed Light Pole	
Existing Utility Pole	
Guy Wire	
Iron Pin	
Accessible Ramp	
Tree Protection	
Silt Fence	
Proposed Curb & Gutter	
Proposed Full Depth Asphalt Pavement	
Proposed Rip Rap Ditch	
Proposed Gravel	
Proposed Concrete Drive	
Asphalt Milling	
Vertical Utility Location	1

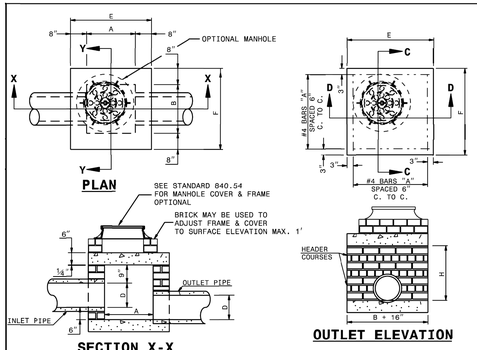

GENERAL NOTES:
CHAMFER ALL EXPOSED CORNERS 1".
USE CLASS "B" CONCRETE THROUGHOUT.
USE #4 BAR DOWELS AT 12" CENTERS.
MORTAR JOINTS 1/2" ± 1/8" THICK.
CONCAVE TOO ALL EXPOSED JOINTS.
USE FORMS TO CONSTRUCT THE BOTTOM SLAB.
JUMBO BRICK WILL BE PERMITTED. CONCRETE BRICK OR 4" SOLID CONCRETE BLOCKS MAY BE USED IN LIEU OF CLAY BRICK.
FOR 8'-0" IN HEIGHT OR LESS, USE 8" WALL. OVER 8'-0" IN HEIGHT, USE 12" WALL TO 6'-0" FROM TOP OF WALL, AND 8" WALL FOR THE REMAINING 6'-0". ADJUST DIMENSIONS AND QUANTITIES ACCORDINGLY.
IF REINFORCED CONCRETE PIPE IS SET IN BASE SLAB OF BOX, ADD TO BASE AS SHOWN ON STANDARD NO. 840.00.
PROVIDE ALL JUNCTION BOXES OVER 3'-6" IN DEPTH WITH STEPS 12" ON CENTERS IN ACCORDANCE WITH STD. NO. 840.66.
ADJUST THE STEEL, CONCRETE AND BRICK MASONRY QUANTITIES TO INCLUDE THE ADDITION OF THE MANHOLE (I.E. DIAGONAL BARS SHORTENED AROUND OPENING IN TOP SLAB, ADDITIONAL VARIABLE HEIGHT BRICK MASONRY, OPENING IN TOP SLAB.)
MAX. DEPTH OF THIS STRUCTURE FROM TOP OF BOTTOM SLAB TO TOP ELEVATION IS 12 FEET.

DIMENSIONS AND QUANTITIES FOR BRICK JUNCTION BOXES

DIMENSIONS OF BOX AND PIPE				REINFORCEMENT BARS		TOP SLAB DIMENSIONS		CUBIC YARDS			DEDUCTIONS FOR ONE PIPE CU.YDS.	
								CONC.	BRICK MASONRY			
PIPE D	SPAN A	WIDTH B	HEIGHT H	NO.	LENGTH	E	F	TOP & BOTTOM CU. YD.	WIN. HEIGHT CU. YD	WALL PER FT. HT. CU. YD.	C.S.	R.C.
12"	2'-0"	2'-0"	2'-3"	12	3'-1"	3'-4"	3'-4"	0.412	0.591	0.263	0.020	0.032
15"	2'-0"	2'-0"	2'-6"	12	3'-1"	3'-4"	3'-4"	0.412	0.657	0.263	0.031	0.047
18"	2'-4"	2'-4"	2'-9"	14	3'-5"	3'-8"	3'-8"	0.498	0.814	0.296	0.044	0.065
24"	3'-0"	3'-0"	3'-3"	16	4'-1"	4'-4"	4'-4"	0.695	1.176	0.362	0.078	0.113
30"	3'-4"	3'-4"	3'-9"	16	4'-5"	4'-8"	4'-8"	0.807	1.481	0.395	0.122	0.170
36"	4'-0"	4'-0"	4'-3"	20	5'-1"	5'-4"	5'-4"	1.053	1.959	0.461	0.176	0.238
42"	4'-8"	4'-8"	4'-9"	22	5'-9"	6'-0"	6'-0"	1.333	2.503	0.527	0.240	0.323
48"	5'-4"	5'-4"	5'-3"	26	6'-5"	6'-8"	6'-8"	1.646	2.940	0.560	0.313	0.422
54"	5'-10"	5'-10"	5'-9"	28	6'-11"	7'-2"	7'-2"	1.902	3.502	0.609	0.396	0.535
60"	6'-6"	6'-6"	6'-3"	30	7'-7"	7'-10"	7'-10"	2.272	4.113	0.658	0.489	0.660
66"	7'-1"	7'-1"	6'-9"	32	8'-2"	8'-5"	8'-5"	2.624	4.778	0.708	0.591	0.798

STATE OF NORTH CAROLINA DEPT. OF TRANSPORTATION DIVISION OF HIGHWAYS RALEIGH, N.C.
1-18
ROADWAY STANDARD DRAWING FOR **BRICK JUNCTION BOX** (WITH OPTIONAL MANHOLE) 12" THRU 66" PIPE
SHEET 1 OF 1
840.32

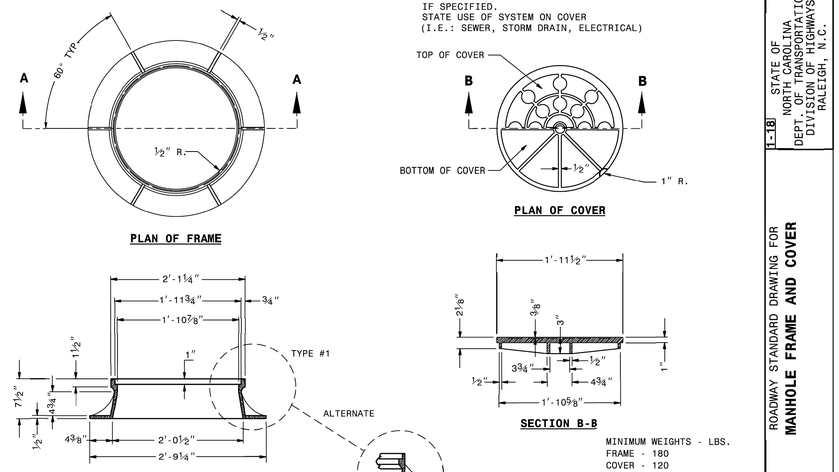

SOLID COVER SHOWN PERFORATED. PERFORATED AVAILABLE IF SPECIFIED.
STATE USE OF SYSTEM ON COVER (I.E.: SEWER, STORM DRAIN, ELECTRICAL)

MINIMUM WEIGHTS - LBS.
FRAME - 180
COVER - 120
TOTAL - 300

STATE OF NORTH CAROLINA DEPT. OF TRANSPORTATION DIVISION OF HIGHWAYS RALEIGH, N.C.
1-18
ROADWAY STANDARD DRAWING FOR **MANHOLE FRAME AND COVER**
SHEET 1 OF 1
840.54

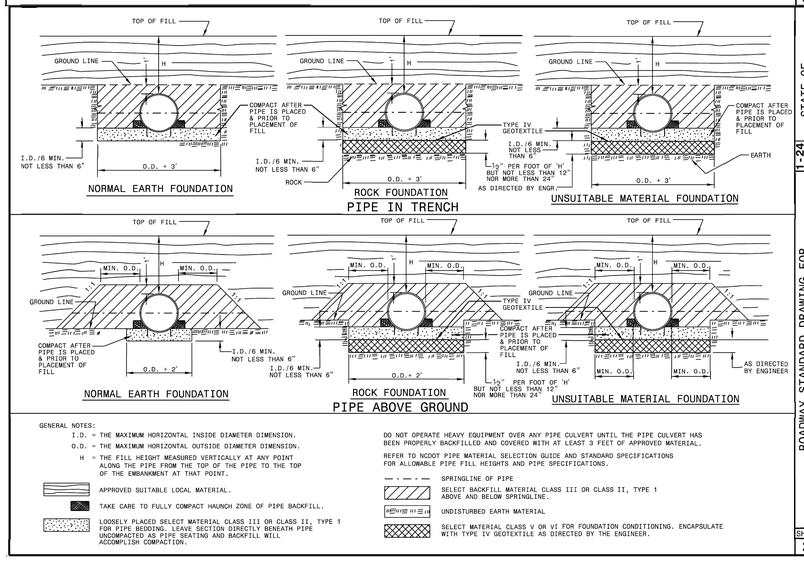

GENERAL NOTES:
I.D. = THE MAXIMUM HORIZONTAL INSIDE DIAMETER DIMENSION.
O.D. = THE MAXIMUM HORIZONTAL OUTSIDE DIAMETER DIMENSION.
H = THE FILL HEIGHT MEASURED VERTICALLY AT ANY POINT ALONG THE PIPE FROM THE TOP OF THE PIPE TO THE TOP OF THE EMBANKMENT AT THAT POINT.
APPROVED SUITABLE LOCAL MATERIAL.
TAKE CARE TO FULLY COMPACT HAUNCH ZONE OF PIPE BACKFILL.
LOOSELY PLACED SELECT MATERIAL CLASS III OR CLASS II, TYPE 1 FOR PIPE BEDDING. LEAVE SECTION DIRECTLY BENEATH PIPE UNCOMPACTED AS PIPE SEATING AND BACKFILL WILL ACCOMPLISH COMPACTION.

DO NOT OPERATE HEAVY EQUIPMENT OVER ANY PIPE CULVERT UNTIL THE PIPE CULVERT HAS BEEN PROPERLY BACKFILLED AND COVERED WITH AT LEAST 3 FEET OF APPROVED MATERIAL.
REFER TO NCDOT PIPE MATERIAL SELECTION GUIDE AND STANDARD SPECIFICATIONS FOR ALLOWABLE PIPE FILL HEIGHTS AND PIPE SPECIFICATIONS.
SPRINGLINE OF PIPE
SELECT BACKFILL MATERIAL CLASS III OR CLASS II, TYPE 1 ABOVE AND BELOW SPRINGLINE.
UNDISTURBED EARTH MATERIAL
SELECT MATERIAL CLASS V OR VI FOR FOUNDATION CONDITIONING. ENCAPSULATE WITH TYPE IV GEOTEXTILE AS DIRECTED BY THE ENGINEER.

STATE OF NORTH CAROLINA DEPT. OF TRANSPORTATION DIVISION OF HIGHWAYS RALEIGH, N.C.
1-24
ROADWAY STANDARD DRAWING FOR **METHOD OF PIPE INSTALLATION** FLEXIBLE PIPE
SHEET 1 OF 2
300.01

NOTES:

1. A STABILIZED ENTRANCE PAD OF 2"–3" WASHED STONE SHALL BE LOCATED WHERE TRAFFIC WILL ENTER OR LEAVE THE CONSTRUCTION SITE ONTO A PUBLIC STREET.
2. FILTER FABRIC OR COMPACTED CRUSHER RUN STONE SHALL BE USED AS A BASE FOR THE CONSTRUCTION ENTRANCE.
3. THE ENTRANCE SHALL BE MAINTAINED IN A CONDITION WHICH WILL PREVENT TRACKING OR FLOWING OF SEDIMENT ONTO PUBLIC STREETS OR EXISTING PAVEMENT. THIS MAY REQUIRE PERIODIC TOP DRESSING WITH ADDITIONAL STONE AS CONDITIONS WARRANT AND REPAIR OR CLEANOUT OF ANY MEASURES USED TO TRAP SEDIMENT.
4. ANY SEDIMENT SPILLED, DROPPED, WASHED, OR TRACKED ONTO PUBLIC STREETS MUST BE REMOVED IMMEDIATELY.
5. WHEN APPROPRIATE, WHEELS MUST BE CLEANED TO REMOVE SEDIMENT PRIOR TO ENTERING A PUBLIC STREET. WHEN WASHING IS REQUIRED, IT SHALL BE DONE IN AN AREA STABILIZED WITH CRUSHED STONE WHICH DRAINS INTO AN APPROVED SEDIMENT BASIN SEE STD. NO. 30.11B.
6. COUNTY MAY REQUIRE A STANDARD COMMERCIAL DRIVEWAY (STD. 10.24 & 10.25) TO ACCESS THE CONSTRUCTION SITE IF THE DRIVEWAY IS ON A THOROUGHFARE.

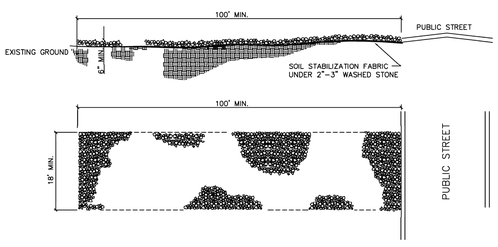

APPROVED DATE: 02/2007
NOT TO SCALE

MECKLENBURG COUNTY LAND DEVELOPMENT STANDARDS
STABILIZED CONSTRUCTION ENTRANCE
STD. NO. 30.11A REV.

GENERAL CONSTRUCTION NOTES:

1. ALL WORK SHALL BE IN ACCORDANCE WITH THE CHARLOTTE LAND DEVELOPMENT STANDARDS MANUAL (MCLDSM), AND NCDOT ROADWAY STANDARD DRAWINGS, LATEST EDITIONS.
2. CONTRACTOR IS RESPONSIBLE FOR PLACING ALL TRAFFIC CONTROL DEVICES AND SHALL CONFORM TO THE REQUIREMENTS OF THE CHARLOTTE DEPT. OF TRANSPORTATION (CDOT) WORK AREA TRAFFIC CONTROL HANDBOOK (W.A.T.C.H.), LATEST EDITION.
3. ALL STAGING, EXCAVATION, STOCKPILING, AND CONSTRUCTION SHALL BE CONTAINED WITHIN THE HOA PROPERTY (TAX PARCEL # 111–331–55), PERMANENT STORM DRAINAGE EASEMENT, AND TEMPORARY CONSTRUCTION EASEMENT.
4. CONTRACTOR SHALL KEEP ALL CONSTRUCTION EQUIPMENT, MATERIAL, AND STOCKPILES OFF OF DRIVEWAYS, UNLESS OTHERWISE NOTED ON PLANS.
5. UTILITIES SHOWN WITHIN THE PROJECT AREA MAY BE INCOMPLETE AND ARE BASED ON A LIMITED SURVEY, GIS RECORDS, AND/OR HISTORICAL MAPPING. CONTRACTOR IS FULLY RESPONSIBLE FOR CONTACTING THE APPROPRIATE PARTIES AND ASSURING EXISTING UTILITIES ARE LOCATED PRIOR TO CONSTRUCTION.
6. ALL DISTURBED LAWN AREAS SHALL BE RESTORED TO GRADES AS INDICATED ON THE PLAN, RAKED, SEEDED AND MULCHED. ALL DISTURBED STONE FOR THE WALKING TRAIL SHALL BE RESTORED WITH THE SAME STONE, INCLUDING OVER THE SINK HOLE.
7. CONTRACTOR IS RESPONSIBLE FOR ADHERING TO ALL EROSION CONTROL MEASURES AS NECESSARY PER CITY AND STATE REQUIREMENTS.
8. CONTRACTOR SHALL USE CAUTION EXCAVATING NEAR EXISTING TREES IDENTIFIED AS PROTECTED IN OR OUTSIDE THE R.O.W. WHEN NECESSARY, PRIOR TO EXCAVATION TREE ROOTS SHALL BE PRUNED AND CUT CLEANLY USING A DISC TRENCHER.
9. CONTRACTOR SHALL INSTALL ALUMINIZED STEEL TYPE 2 PIPE.
10. STORM WATER PIPING INSTALLATION SHALL BE IN ACCORDANCE WITH NCDOT STANDARD DETAIL 300.01.
11. PROPOSED STORM WATER PIPING LENGTHS AND SLOPES NOTED ON THE PLANS ARE MEASURED FROM CENTER–OF–STRUCTURE TO CENTER–OF–STRUCTURE.
12. SELECT MATERIALS FOR FOUNDATION CONDITIONING AND BEDDING MUST COMPLY WITH NCDOT SECTION 1016 SELECT MATERIALS. USE TYPE IV ENGINEERING FABRIC PER NCDOT SECTION 1056 (TABLE 1056–1).
13. ALL BACKFILL MATERIAL SHALL BE NON–PLASTIC IN NATURE, FREE FROM ROOTS, VEGETATIVE MATTER, WASTE, CONSTRUCTION MATERIAL OR OBJECTIONABLE MATERIAL. SAID MATERIAL SHALL BE CAPABLE OF BEING COMPACTED BY MECHANICAL MEANS. EACH 6"–8" LAYER MUST BE THOROUGHLY COMPACTED TO 95%.

NORTH CAROLINA PROFESSIONAL ENGINEER SEAL 19003 — Digitally signed by: 82DD5AD63B4BAF5... — ROBERT E. WILSON
9/26/2025

Plans Prepared By:
LaBella
Powered by partnership.
400 S. Tryon Street, Suite 1300
Charlotte, NC 28285
(704) 376-6423
N.C. License # C-0430
labellapc.com

Charlotte-Mecklenburg STORM WATER Services

NO.	DESCRIPTION	DATE	BY

SCALE: N/A
PROJECT NUMBER: 2251002
B:\DLGBAL\Projects\Mecklenburg County\2251002 – 7214 Maitland Ln (Steel Creek Drainage)\CAD\Plan Sheets\2251002_GN001.dwg
CAD FILE PATH
CHECK: REW
PREPARER: JAB
APPROVER: REW
08/01/2025

SHEET 2 OF 2
7214 MAITLAND LANE DRAINAGE IMPROVEMENTS
NOTES & DETAILS

SPECIFICATION FOR CORRUGATED METAL PIPE

ALUMINIZED STEEL TYPE 2

1.0 GENERAL

1.1 This specification covers the manufacture and installation of the Aluminized Steel Type 2 corrugated steel pipe or pipe-arch (CSP) detailed in the project plans.

2.0 DESIGN STANDARDS

2.1 The CSP meets the design parameters of the American Association of State Highway and Transportation Officials (AASHTO) Standard Specification for Highway Bridges, AASHTO LRFD Bridge Design, and/or the American Iron and Steel Institute (AISI).

3.0 MATERIAL

3.1 The Aluminized Steel Type 2 coils shall conform to the applicable requirements of AASHTO M 274 or ASTM A929.

4.0 PIPE

4.1 The CSP shall be manufactured in accordance with the applicable requirements of AASHTO M 36 or ASTM A760. The pipe sizes, gauges and corrugations shall be as shown on the project plans.

4.2 All fabrication of the product shall occur within the United States.

5.0 COUPLING BANDS

5.1 Coupling bands for the CSP shall be made of the same base metal and coatings as the CSP to a minimum of 18 gauge.

5.2 Ends of the CSP are rerolled with annular corrugations for proper indexing.

5.3 Connection fasteners will be provided.

6.0 HANDLING & ASSEMBLY

6.1 Refer to the recommendations of the National Corrugated Steel Pipe Association's (NCSPA).

7.0 INSTALLATION

7.1 The installation shall be in accordance with AASHTO Standard Specifications for Highway Bridges, LRFD Section 26, Division II, NCSPA, or ASTM A798 and in conformance with the project plans and specifications. If there are any inconsistencies or conflicts, the contractor must bring them to the attention of the project engineer.

7.2 It is always the contractor's responsibility to follow OSHA guidelines for safe practices.

8.0 CONSTRUCTION LOADS

8.1 Construction loads may be greater than design loads. The contractor shall follow the recommendations for additional compacted material per manufacturer's or NCSPA guidelines.

ATTACHMENT 4



CONTECH®
ENGINEERED SOLUTIONS
A QUIKRETE® COMPANY

Corrugated Metal Pipe Design Guide

CONTECH®
PIPE SOLUTIONS

Corrugated Metal Pipe (CMP) Design Guide
Table of Contents

Drainage Pipe Selection
Introduction 3
Environment & Abrasion Guidelines / Reference Specifications 4
Usage Guide for Drainage Products 4
Product Dimensions and Hydraulics 5

HEL-COR® Corrugated Steel Pipe
Height of Cover Tables 7
Handling Weights 10

CORLIX® Corrugated Aluminum Pipe
Height of Cover Tables 11
Handling Weights 12

ULTRA FLO®
Height of Cover Tables 13
Handling Weights 14

Installation of CMP 15

Miscellaneous
Smooth Cor™ 16
QUICK STAB® Joint 17
End Sections 18

CONTECH®
ENGINEERED SOLUTIONS

Durability Design Guide

Proper design of culverts and storm sewers requires structural, hydraulic and durability considerations. While most designers are comfortable with structural and hydraulic design, the mechanics of evaluating abrasion, corrosion and water chemistry to perform a durability design are not commonly found in most civil engineering handbooks.

The durability and service life of a drainage pipe installation is directly related to the environmental conditions encountered at the site and the type of materials and coatings from which the culvert is fabricated. Two principle causes of reduced service life in drainage pipe materials are corrosion and abrasion.

Service life can be affected by the corrosive action of the backfill in contact with the outside of a drainage pipe or more commonly by the corrosive and abrasive action of the flow in the invert of the drainage pipe. The design life analysis should include a check for both the water side and soil side environments to determine which is more critical— or which governs service life.

The potential for metal loss in the invert of a drainage pipe due to abrasive flows is often overlooked by designers and its effects are often mistaken for corrosion. An estimate for potential abrasion is required at each pipe location in order to determine the appropriate material and gage.

This manual is intended to guide specifiers through the mechanics of selecting appropriate drainage products to meet service life requirements. The information contained in the following pages is a composite of several national guidelines.



Using the CMP Design Guide

The choice of material, gage and product type can be extremely important to service life. The following steps describe the procedure for selecting the appropriate drainage product, material and gage to meet a specific service life requirement.

Design Sequence

1. Select pipe or structure based on hydraulic and clearance requirements. Use Tables 5 and 6 as reference for size limits and hydraulic properties of all drainage products.

2. Use Height of Cover tables for the chosen pipe or structure to determine the material gage required for the specific loading condition.

3. Use Table 1 to select the appropriate material for the site-specific environmental conditions. Whenever possible, existing installations of drainage structures along the same water course offer the most reliable estimate of long-term performance for specific environment conditions. In many cases, there will be more than one material that is appropriate for the project environmental conditions. Generally speaking, the metal material types increase in price as you move from top down on Table 1. Please contact your local Contech Sales Representative for pricing.

4. Use Table 2 to determine which abrasion level most accurately describes the typical storm event (2 year storm). The expected stream velocity and associated abrasion conditions should be based on a typical flow and not a 10 or 50-year design flood.

5. Use Table 3 to determine whether the structural gage for the selected material is sufficient for the design service life. If the structural gage is greater than or equal to the gage required for a particular abrasion condition and service life, use the structural gage. Conversely, if the structural gage is less than the gage required for a particular abrasion condition and service life, use the gage required by Table 3.

Note:

Both Contech round pipe and pipe-arch are available with either helical or annular corrugations. Contech HEL-COR pipe (helical corrugations) is furnished with continuous lock seams and annular re-rolled ends or non-rerolled ends. For 3"x1" and 5"x1" HEL-COR pipe-arch, we recommend non-rerolled ends with flat or dimpled bands and flat gaskets. Contech riveted pipe is furnished with annular corrugations only. The height of cover tables in this guide are helical corrugations only. Consult your Contech representative for Height of Cover tables on riveted pipe.

Table 1 — Recommended Environments												
Material Type	Soil* and Water pH										Resistivity (ohm-cm)	
	3	4	5	6	7	8	9	10	11	12	Minimum	Maximum
Galvanized Steel*											2,000	10,000
Aluminized Steel Type 2 (ALT2)											1,500	N/A
Polymer-Coated											250	N/A
Aluminum Alloy											500	N/A

**Appropriate pH range for Galvanized Steel is 6.0 to 10*



Table 2 — FHWA Abrasion Guidelines			
Abrasion Level	Abrasion Condition	Bed Load	Flow Velocity (fps)
1	Non-Abrasive	None	Minimal
2	Low Abrasion	Minor	< 5
3	Moderate Abrasion	Moderate	5 - 15
4	Severe Abrasion	Heavy	> 15

"Interim Direct Guidelines on Drainage Pipe Alternative Selection." FHWA, 2005.

Table 3 – Drainage Product Usage Guide												
Application	Culverts, Storm Drain, Cross Drain, Median Drain, Side Drain											
Roadway Classification	Rural	Minor	Major	Urban	Rural	Minor	Major	Urban	Rural	Minor	Major	Urban
Design Service Life	25	50	75	100	25	50	75	100	25	50	75	100
Abrasion Level	Abrasion Level 1 & 2				Abrasion Level 3				Abrasion Level 4			
CMP (1/2" & 1" deep corrugations), ULTRA FLO® & Smooth Cor™ Minimum gage required to meet design service life, assuming that structural design has been met.												
Galvanized (2 oz.)	16	12	10	8[4]	14	10	8	N/A	14[5]	10[5]	8[5]	N/A
Galvanized and Asphalt Coated	16	14	10	8	14	12	8	N/A	14[5]	12[5]	8[5]	N/A
Galv., Asphalt Coated & Paved Invert	16	16	14	10	16	14	12	8	14	12	10	N/A
Aluminized Type 2 (ALT2)	16	16	16	14	14	14	14	12	14[6]	14[6]	14[6]	12[6]
Polymer-Coated	16	16	16[8]	16[9]	16	16	16[8]	16[9]	14[7]	14[7]	14[7,8]	14[7,9]
Aluminum Alloy	16	16	16	16	14	14	14	14	14[5]	14[5]	14[5]	14[5]

1. *Based on Table 1 - Recommended Environments.*
2. *Smooth Cor™ Steel Pipe combines a corrugated steel exterior shell with a hydraulically smooth interior liner.*
3. *Service life estimates for ULTRA FLO® and Smooth Cor™ Pipe assume a storm sewer application. Storm sewers rarely achieve abrasion levels 3 or 4. For applications other than storm sewers or abrasion conditions above Abrasion Level 2, please contact your Contech Sales Representative for gage and coating recommendations.*
4. *Design service life for 8 GA galvanized is 97 years.*
5. *Invert protection to consist of velocity reduction structures.*
6. *Asphalt coated and paved invert or velocity reduction structures are needed.*
7. *Requires a field applied concrete paved invert with minimum thickness 1" above corrugation crests.*
8. *75 year service life for polymer-coated is based on a pH range of 4-9 and resistivity greater than 750 ohm-cm.*
9. *100 year service life for polymer-coated is based on a pH range of 5-9 and resistivity greater than 1500 ohm-cm.*

Table 4 - AASHTO Reference Specifications					
	Material Type	**Material**	**Pipe**	**Design***	**Installation***
Pipe & Pipe-Arch	**CMP (1/2" or 1" deep corrugations)**				
	Galvanized (2 oz.)	M218	M36	Section 12	Section 26
	Asphalt Coated	M190	M36	Section 12	Section 26
	Asphalt Coated and Paved Invert	M190	M36	Section 12	Section 26
	Aluminized Type 2	M274	M36	Section 12	Section 26
	Polymer-Coated	M246	M36 & M245	Section 12	Section 26
	Aluminum Alloy	M197	M196	Section 12	Section 26
	ULTRA FLO® (3/4" x 3/4" x 7-1/2" corrugation)				
	Galvanized (2 oz.)	M218	M36	Section 12	Section 26
	Aluminized Type 2	M274	M36	Section 12	Section 26
	Polymer-Coated	M246	M36 & M245	Section 12	Section 26
	Aluminum Alloy	M197	M196	Section 12	Section 26
	Smooth Cor™				
	Polymer-Coated	M246	M36 & M245	Section 12	Section 26

* *AASHTO LRFD Bridge Design Specification and AASHTO Standard Specification for Highway Bridges*

Table 5 - Product Dimensions						
		Drainage Product	Common Uses	Size Limits*		Manning's "n" Value
				Minimum	Maximum	
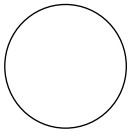	Round Pipe	Corrugated Steel (1/2" deep corrugation)	Culverts, small bridges, storm water detention/ retention systems, conduits, tunnels, storm sewers.	12"	84"	0.011 - 0.021
		Corrugated Steel with Paved Invert (1/2" deep corrugation)		12"	84"	0.014 - 0.020
		Corrugated Steel (1" deep corrugation)		54"	144"	0.022 - 0.027
		Corrugated Steel with Paved Invert (1" deep corrugation)		54"	144"	0.019 - 0.023
		Corrugated Aluminum (1/2" deep corrugation)		12"	72"	0.011 - 0.021
		Corrugated Aluminum (1" deep corrugation)		30"	120"	0.023 - 0.027
		ULTRA FLO® Steel	Storm sewers, culverts, storm water detention/ retention systems.	18"	102"	0.012
		ULTRA FLO® Aluminum		18"	84"	0.012
		Smooth Cor™ Steel (1/2" deep corrugation)		18"	66"	0.012
		Smooth Cor™ Steel (1" deep corrugation)		48"	126"	0.012
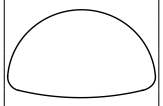	Pipe-Arch	Corrugated Steel (1/2" deep corrugation)	Culverts, small bridges, storm water detention/ retention systems, conduits, tunnels, storm sewers.	17" x 13"	83" x 57"	0.011 - 0.021
		Corrugated Steel with Paved Invert (1/2" deep corrugation)		17" x 13"	83" x 57"	0.014 - 0.019
		Corrugated Steel (1" deep corrugation)		53" x 41"	142" x 91"	0.023 - 0.027
		Corrugated Steel with Paved Invert (1" deep corrugation)		53" x 41"	142" x 91"	0.019 - 0.022
		Corrugated Aluminum (1/2" deep corrugation)		17" x 13"	71" x 47"	0.011 - 0.021
		Corrugated Aluminum (1" deep corrugation)		60" x 46"	112" x 75"	0.023 - 0.027
		ULTRA FLO® Steel	Storm sewers, culverts, storm water detention/ retention systems.	20" x 16"	66" x 51"	0.012
		ULTRA FLO® Aluminum		20" x 16"	66" x 51"	0.012
		Smooth Cor™ Steel (1/2" deep corrugation)		21" x 15"	77" x 52"	0.012
		Smooth Cor™ Steel (1" deep corrugation)		53" x 41"	137" x 87"	0.012

* *For sizes outside of these limits, please contact your Contech representative.*

Table 6 — Corrugated Steel Pipe—Values of Coefficient of Roughness (Manning's "n")										
	Helical* Corrugation – 2 2/3" x 1/2"								1-1/2" x 1/4"	Annular
2 2/3" x 1/2"	**12 in.**	**15 in.**	**18 in.**	**24 in.**	**36 in.**	**48 in.**	**60 in. +**		**8 in.**	**10 in.**	**All Diameters**
Unpaved	0.011	0.012	0.013	0.015	0.018	0.020	0.021		0.012	0.014	0.024
Paved Invert				0.014	0.017	0.020	0.019				0.021
Smooth Cor™			0.012	0.012	0.012	0.012	0.012				N/A
	Helical*– 3" x 1"										
3" x 1"	**36 in.**	**42 in.**	**48 in.**	**54 in.**	**60 in.**	**66 in.**	**72 in.**	**78 in. +**			**All Diameters**
Unpaved	0.022	0.022	0.023	0.023	0.024	0.025	0.026	0.027			0.027
Paved Invert	0.019	0.019	0.020	0.020	0.021	0.022	0.022	0.023			0.023
Smooth Cor™			0.012	0.012	0.012	0.012	0.012	0.012			N/A
	Helical* – 5" x 1"										
5" x 1"			**48 in.**	**54 in.**	**60 in.**	**66 in.**	**72 in.**	**78 in. +**			**All Diameters**
Unpaved			0.022	0.022	0.023	0.024	0.024	0.025			N/A
Paved Invert			0.019	0.019	0.020	0.021	0.021	0.022			N/A
ULTRA FLO®	**3/4" x 3/4" x 7-1/2"** All diameters n = 0.012										N/A

* *Tests on helically corrugated pipe demonstrate a lower coefficient of roughness than for annularly corrugated steel pipe. Pipe-arches have approximately the same roughness characteristics as their round equivalent pipes.*

Area and Hydraulic Radius for Corrugated Steel Pipe Flowing Full

Round Pipe – Area & Hydraulic Radius		
Diameter (in.)	Area (Ft^2)	Hydraulic Radius (ft.)
12	0.8	0.250
15	1.2	0.312
18	1.8	0.375
21	2.4	0.437
24	3.1	0.500
30	4.9	0.625
36	7.1	0.750
42	9.6	0.875
48	12.6	1.000
54	15.9	1.125
60	19.6	1.250
66	23.8	1.375
72	28.1	1.500
78	33.2	1.625
84	38.5	1.750
90	44.2	1.875
96	50.3	2.000
102	56.8	2.125
108	63.6	2.250
114	70.9	2.375
120	78.5	2.500
126	86.6	2.625
132	95.0	2.750
138	103.9	2.875
144	113.1	3.000

Notes:

1. *Listed pipe arch dimensions do not include tolerance.*
2. *For additional detail, please reference the hydraulic radius tables (Figure 4.32 and 4.33) found in the NCSPA CSP Design Manual, 2018.*

Pipe-Arch – Area & Hydraulic Radius			
2 2/3" x 1/2" Corrugated Steel Pipe			
Diameter (in.)	Pipe-Arch Equivalent Size (in.)	Waterway Area (Ft^2)	Hydraulic Radius $A/\pi D$ (ft.)
15	17 x 13	1.1	0.280
18	21 x 15	1.6	0.340
21	24 x 18	2.2	0.400
24	28 x 20	2.4	0.462
30	35 x 24	4.5	0.573
36	42 x 29	6.5	0.690
42	49 x 33	8.9	0.810
48	57 x 38	11.6	0.924
54	64 x 43	14.7	1.040
60	71 x 47	18.1	1.153
66	77 x 52	21.9	1.268
72	83 x 57	26.0	1.380

Pipe-Arch – Area & Hydraulic Radius			
3" x 1" or 5" x 1" Corrugated Steel Pipe			
Diameter (in.)	Pipe-Arch Equivalent Size (in.)	Waterway Area (Ft^2)	Hydraulic Radius $A/\pi D$ (ft.)
54	60 x 46	15.6	1.104
60	66 x 51	19.3	1.230
66	73 x 55	23.2	1.343
72	81 x 59	27.4	1.454
78	87 x 63	32.1	1.573
84	95 x 67	37.0	1.683
90	103 x 71	42.4	1.800
96	112 x 75	48.0	1.911
102	117 x 79	54.2	2.031
108	128 x 83	60.5	2.141
114	137 x 87	67.4	2.259
120	142 x 91	74.5	2.373

ULTRA FLO® Pipe-Arch – Area & Hydraulic Radius			
2 2/3" x 1/2 " Corrugated Steel Pipe			
Diameter (in.)	Pipe-Arch Equivalent Size (in.)	Waterway Area (Ft^2)	Hydraulic Radius $A/\pi D$ (ft.)
18	20 x 16	1.7	0.36
21	23 x 19	2.3	0.42
24	27 x 21	3.0	0.48
30	33 x 26	4.7	0.60
36	40 x 31	6.7	0.71
42	46 x 36	9.2	0.84
48	53 x 41	12.1	0.96
54	60 x 46	15.6	1.10
60	66 x 51	19.3	1.23

HEL-COR® Corrugated Steel Pipe

Heights of Cover

2 2/3" x 1/2" Height of Cover Limits for Corrugated Steel Pipe

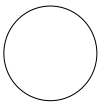

H 20 and H 25 Live Loads

Diameter (in.)	Minimum Cover (in.)	Maximum Cover[2] (ft.) Specified Thickness (in.) and Gage					
		(0.052) 18	(0.064) 16	(0.079) 14	(0.109) 12	(0.138) 10	(0.168) 8
6[8]	12	388	486				
8[8]	12	291	365				
10[8]	12	233	292				
12	12	197	248	310			
15	12	158	198	248			
18	12	131	165	206			
21	12	113	141	177	248		
24	12	98	124	155	217		
30	12		99	124	173		
36	12		83	103	145	186	
42	12		71	88	124	159	195
48	12		62	77	108	139	171
54	12			67	94	122	150
60	12				80	104	128
66	12				68	88	109
72	12					75	93
78	12						79
84	12						66

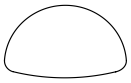

H 20 and H 25 Live Loads, Pipe-Arch

Size		Minimum Thickness (in.)	Minimum Cover (in.)	Maximum Cover (ft.)
Round Equivalent (in.)	Span x Rise (in.)			2 Tons/Ft.^{2} Corner Bearing Pressure
15	17 x 13	0.064	12	16
18	21 x 15	0.064	12	15
21	24 x 18	0.064	12	15
24	28 x 20	0.064	12	15
30	35 x 24	0.064	12	15
36	42 x 29	0.064	12	15
42	49 x 33	0.064*	12	15
48	57 x 38	0.064*	12	15
54	64 x 43	0.079*	12	15
60	71 x 47	0.109*	12	15
66	77 x 52	0.109*	12	15
72	83 x 57	0.138*	12	15

E 80 Live Loads

Diameter (in.)	Minimum Cover (in.)	Maximum Cover[2] (ft.) Specified Thickness (in.) and Gage					
		(0.052) 18	(0.064) 16	(0.079) 14	(0.109) 12	(0.138) 10	(0.168) 8
12	12	197	248	310			
15	12	158	198	248			
18	12	131	165	206			
21	12	113	141	177	248		
24	12	98	124	155	217		
30	12		99	124	173		
36	12		83	103	145	186	
42	12		71	88	124	159	195
48	12		62	77	108	139	171
54	18			67	94	122	150
60	18				80	104	128
66	18				68	88	109
72	18					75	93
78	24						79
84	24						66

E 80 Live Loads, Pipe-Arch

Size		Minimum Thickness (in.)	Minimum Cover (in.)	Maximum Cover (ft.)
Round Equivalent (in.)	Span x Rise (in.)			3 Tons/Ft.^{2} Corner Bearing Pressure
15	17 x 13	0.079	24	22
18	21 x 15	0.079	24	22
21	24 x 18	0.109	24	22
24	28 x 20	0.109	24	22
30	35 x 24	0.138	24	22
36	42 x 29	0.138	24	22
42	49 x 33	0.138*	24	22
48	57 x 38	0.138*	24	22
54	64 x 43	0.138*	24	22
60	71 x 47	0.138*	24	22

** These values are based on the AISI Flexibility Factor limit (0.0433 x 1.5) for pipe-arch.*

Heights of Cover Notes:

1. *These tables are for lock-seam or welded-seam construction. They are not for riveted construction. Consult your Contech Sales Representative for Height of Cover tables on riveted pipe.*
2. *These values, where applicable, were calculated using a load factor of K=0.86 as adopted in the NCSPA CSP Design Manual, 2018.*
3. *The haunch areas of a pipe-arch are the most critical zone for backfilling. Extra care should be taken to provide good material and compaction to a point above the spring line.*
4. *E 80 minimum cover is measured from top of pipe to bottom of tie.*
5. *H 20 and H 25 minimum cover is measured from top of pipe to bottom of flexible pavement or top of rigid pavement.*
6. *The pipe-arch tables are based on the corner bearing pressures as shown. These values may increase or decrease with changes in allowable corner bearing pressures. Consider the use of a round pipe in cases where the height of cover exceeds 8'.*
7. *For construction loads, see Page 15.*
8. *1-1/2" x 1/4" corrugation. H 20, H 25 and E 80 loading.*
9. *Smooth Cor™ has same Height of Cover properties as corrugated steel pipe. The exterior shell of Smooth Cor™ is manufactured in either 2 2/3" x 1/2" or 3" x 1" corrugations; maximum exterior shell is 12 GA.*

Heights of Cover

5" x 1" or 3" x 1" Height of Cover Limits for Corrugated Steel Pipe

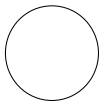

H 20 and H 25 Live Loads

Diameter (in.)	Minimum Cover (in.)	Maximum Cover (ft.) Specified Thickness (in.) and Gage				
		(0.064) 16	(0.079) 14	(0.109) 12	(0.138) 10	(0.168) 8
54	12	56	70	98	127	155
60	12	50	63	88	114	139
66	12	46	57	80	103	127
72	12	42	52	74	95	116
78	12	39	48	68	87	107
84	12	36	45	63	81	99
90	12	33	42	59	76	93
96	12	31	39	55	71	87
102	18	29	37	52	67	82
108	18		35	49	63	77
114	18		32	45	58	72
120	18		30	42	54	66
126	18			39	50	61
132	18			36	46	58
138	18			33	43	53
144	18				39	49

Maximum cover heights shown are for 5" x 1".
To obtain maximum cover for 3" x 1", increase these values by 12%.

E 80 Live Loads

Diameter or Span (in.)	Minimum Cover (in.)	Maximum Cover (ft.) Specified Thickness (in.) and Gage				
		(0.064) 16	(0.079) 14	(0.109) 12	(0.138) 10	(0.168) 8
54	18	56	70	98	127	155
60	18	50	63	88	114	139
66	18	46	57	80	103	127
72	18	42	52	74	95	116
78	24	39	48	68	87	107
84	24	36	45	63	81	99
90	24	33[1]	42	59	76	93
96	24	31[1]	39	55	71	87
102	30	29[1]	37	52	67	82
108	30		35	49	63	77
114	30		32[1]	45	58	72
120	30		30[1]	42	54	66
126	36			39	50	61
132	36			36	46	58
138	36			33[1]	43	53
144	36				39	49

Maximum cover heights shown are for 5" x 1".
To obtain maximum cover for 3" x 1", increase these values by 12%.
(1) These diameters in these gages require additional minimum cover.

5" x 1" Pipe-Arch Height of Cover Limits for Corrugated Steel Pipe



H 20 and H 25 Live Loads

Size			Minimum Thickness (in.)	Minimum Cover (in.)	Maximum Cover (ft.)
Round Equivalent (in.)	Nominal				2 Tons/Ft.^{2} Corner Bearing Pressure
	Min. Span (in.)	Max. Rise (in.)			
54	60 -2.7	46 +2.7	0.109	18	21
60	66 -3.0	51 +3.0	0.109	18	21
66	73 -3.3	55 +3.3	0.109	18	21
72	81 -3.6	59 +3.6	0.109	18	21
78	87 -4.4	63 +4.4	0.109	18	20
84	95 -4.8	67 +4.8	0.109	18	20
90	103 -5.2	71 +5.2	0.109	18	20
96	112 -5.6	75 +5.6	0.109	21	20
102	117 -5.9	79 +5.9	0.109	21	19
108	128 -6.4	83 +6.4	0.109	24	19
114	137 -6.9	87 +6.9	0.109	24	19
120	142 -7.1	91 +7.1	0.138	24	19

Larger sizes are available in some areas of the United States. Check with your local Contech representative. Negative and positive numbers listed with span and rise dimensions are negative and positive tolerances, no tolerance in opposite direction.

E 80 Live Loads, Pipe-Arch

Size			Minimum Thickness (in.)	Minimum Cover (in.)	Maximum Cover (ft.)
Round Equivalent (in.)	Nominal				2 Tons/Ft.^{2} Corner Bearing Pressure
	Min. Span (in.)	Max. Rise (in.)			
54	60 -2.7	46 +2.7	0.109	30	21
60	66 -3.0	51 +3.0	0.109	30	21
66	73 -3.3	55 +3.3	0.109	30	21
72	81 -3.6	59 +3.6	0.109	30	21
78	87 -4.4	63 +4.4	0.109	30	18
84	95 -4.8	67 +4.8	0.109	30	18
90	103 -5.2	71 +5.2	0.109	36	18
96	112 -5.6	75 +5.6	0.109	36	18
102	117 -5.9	79 +5.9	0.109	36	17
108	128 -6.4	83 +6.4	0.109	42	17
114	137 -6.9	87 +6.9	0.109	42	17
120	142 -7.1	91 +7.1	0.138	42	17

Some 3" x 1" and 5" x 1" minimum gages shown for pipe-arch are due to manufacturing limitations. Negative and positive numbers listed with span and rise dimensions are negative and positive tolerances, no tolerance in opposite direction.

Heights of Cover Notes:

1. *These tables are for lock-seam or welded-seam construction. They are not for riveted construction. Consult your Contech Sales Representative for Height of Cover tables on riveted pipe.*
2. *These values, where applicable, were calculated using a load factor of K=0.86 as adopted in the NCSPA CSP Design Manual, 2018.*
3. *The span and rise shown in these tables are nominal. Typically the actual rise that forms is greater than the specified nominal. This actual rise is within the tolerances as allowed by the AASHTO & ASTM specifications. The minimum covers shown are more conservative than required by the AASHTO and ASTM specifications to account for this anticipated increase in rise. Less cover height may be tolerated depending upon actual rise of supplied pipe-arch.*
4. *The haunch areas of a pipe-arch are the most critical zone for backfilling. Extra care should be taken to provide good material and compaction to a point above the spring line.*
5. *E 80 minimum cover is measured from top of pipe to bottom of tie.*
6. *H 20 and H 25 minimum cover is measured from top of pipe to bottom of flexible pavement or top of rigid pavement.*
7. *The pipe-arch tables are based on the corner bearing pressures as shown. These values may increase or decrease with changes in allowable corner bearing pressures. Consider the use of a round pipe in cases where the height of cover exceeds 8'.*
8. *For construction loads, see Page 15.*
9. *Smooth Cor™ has same Height of Cover properties as corrugated steel pipe. The exterior shell of Smooth Cor™ is manufactured in either 2 $^2/_3$" x $^1/_2$" or 3" x 1" corrugations; maximum exterior shell is 12 GA.*

Heights of Cover

3" x 1" Pipe-Arch Height of Cover Limits for Corrugated Steel Pipe-Arch



H 20 and H 25 Live Loads

Size			Minimum Thickness (in.)	Minimum Cover (in.)	Maximum Cover (ft.)
Round Equivalent (in.)	Nominal				2 Tons/Ft.2 Corner Bearing Pressure
	Min. Span (in.)	Max. Rise (in.)			
48	53 -2.4	41 +2.4	0.079	12	25
54	60 -2.7	46 +2.7	0.079	15	25
60	66 -3.0	51 +3.0	0.079	15	25
66	73 -3.3	55 +3.3	0.079	18	24
72	81 -3.6	59 +3.6	0.079	18	21
78	87 -4.4	63 +4.4	0.079	18	20
84	95 -4.8	67 +4.8	0.079	18	20
90	103 -5.2	71 +5.2	0.079	18	20
96	112 -5.6	75 +5.6	0.079	21	20
102	117 -5.9	79 +5.9	0.109	21	19
108	128 -6.4	83 +6.4	0.109	24	19
114	137 -6.9	87 +6.9	0.109	24	19
120	142 -7.1	91 +7.1	0.138	24	19

Larger sizes are available in some areas of the United States. Check with your local Contech Sales Representative. Negative and positive numbers listed with span and rise dimensions are negative and positive tolerances, no tolerance in opposite direction.

E 80 Live Loads, Pipe-Arch

Size			Minimum Thickness (in.)	Minimum Cover (in.)	Maximum Cover (ft.)
Round Equivalent (in.)	Nominal				2 Tons/Ft.2 Corner Bearing Pressure
	Min. Span (in.)	Max. Rise (in.)			
48	53 -2.4	41 +2.4	0.079	24	25
54	60 -2.7	46 +2.7	0.079	24	25
60	66 -3.0	51 +3.0	0.079	24	25
66	73 -3.3	55 +3.3	0.079	30	24
72	81 -3.6	59 +3.6	0.079	30	21
78	87 -4.4	63 +4.4	0.079	30	18
84	95 -4.8	67 +4.8	0.079	30	18
90	103 -5.2	71 +5.2	0.079	36	18
96	112 -5.6	75 +5.6	0.079	36	18
102	117 -5.9	79 +5.9	0.109	36	17
108	128 -6.4	83 +6.4	0.109	42	17
114	137 -6.9	87 +6.9	0.109	42	17
120	142 -7.1	91 +7.1	0.138	42	17

Some 3" x 1" and 5" x 1" minimum gages shown for pipe-arch are due to manufacturing limitations. Negative and positive numbers listed with span and rise dimensions are negative and positive tolerances, no tolerance in opposite direction.

Heights of Cover Notes:

1. *These tables are for lock-seam or welded-seam construction. They are not for riveted construction. Consult your Contech Sales Representative for Height of Cover tables on riveted pipe.*
2. *These values, where applicable, were calculated using K=0.86 as adopted in the NCSPA CSP Design Manual, 2018.*
3. *The span and rise shown in these tables are nominal. Typically the actual rise that forms is greater than the specified nominal. This actual rise is within the tolerances as allowed by the AASHTO & ASTM specifications. The minimum covers shown are more conservative than required by the AASHTO and ASTM specifications to account for this anticipated increase in rise. Less cover height may be tolerated depending upon actual rise of supplied pipe-arch.*
4. *The haunch areas of a pipe-arch are the most critical zone for backfilling. Extra care should be taken to provide good material and compaction to a point above the spring line.*
5. *E 80 minimum cover is measured from top of pipe to bottom of tie.*
6. *H 20 and H 25 minimum cover is measured from top of pipe to bottom of flexible pavement or top of rigid pavement.*
7. *The pipe-arch tables are based on the corner bearing pressures as shown. These values may increase or decrease with changes in allowable corner bearing pressures. Consider the use of a round pipe in cases where the height of cover exceeds 8'.*
8. *For construction loads, see Page 15.*
9. *Smooth Cor™ has same Height of Cover properties as corrugated steel pipe. The exterior shell of Smooth Cor™ is manufactured in either 2 2/3" x 1/2" or 3" x 1" corrugations; maximum exterior shell is 12 GA.*



Approximate Weight (lbs/ft)
HEL-COR® Corrugated Steel Pipe
(Estimated Average Weights—Not for Specification Use)

1 1/2" x 1/4" Corrugation			
Inside Diameter (in.)	Specified Thickness (in.)	Galvanized & ALT2	Asphalt Coated
6	0.052	4	5
	0.064	5	6
8	0.052	5	6
	0.064	6	7
10	0.052	6	7
	0.064	7	8

Steel Thicknesses by Gage						
Gage (GA)	18	16	14	12	10	8
Thickness	.052	.064	.079	.109	.138	.168

2 2/3" x 1/2" Corrugation					
Inside Diameter (in.)	Specified Thickness (in.)	Galvanized & ALT2	Asphalt Coated	Asphalt Coated w/ Paved Invert	Smooth Cor™
12	0.052	8	10	13	
	0.064	10	12	15	
	0.079	12	14	17	
15	0.052	10	13	16	
	0.064	12	15	18	
	0.079	15	18	21	
18	0.052	12	16	19	
	0.064	15	19	22	25
	0.079	18	22	25	28
21	0.052	14	18	23	
	0.064	17	21	26	29
	0.079	21	25	30	33
	0.109	29	33	33	41
24	0.052	15	20	26	
	0.064	19	24	30	30
	0.079	24	29	35	38
	0.109	33	38	44	47
30	0.064	24	30	36	42
	0.079	30	36	42	48
	0.109	41	47	53	59
36	0.064	29	36	44	51
	0.079	36	43	51	58
	0.109	49	56	64	71
	0.138	62	69	77	
42	0.064	34	42	51	60
	0.079	42	50	59	68
	0.109	57	65	74	82
	0.138	72	80	89	
	0.168	88	96	105	
48	0.064	38	48	57	67
	0.079	48	58	67	77
	0.109	65	75	84	94
	0.138	82	92	101	
	0.168	100	110	119	
54	0.079	54	65	76	87
	0.109	73	84	95	106
	0.138	92	103	114	
	0.168	112	123	134	
60	0.109	81	92	106	117
	0.138	103	114	128	
	0.168	124	135	149	
66	0.109	89	101	117	129
	0.138	113	125	141	
	0.168	137	149	165	
72	0.138	123	137	154	(2)
	0.168	149	163	180	
78	0.168	161	177	194	(2)
84	0.168	173	190	208	(2)

3" x 1" or 5" x 1" Corrugation					
Inside Diameter (in.)	Specified Thickness (in.)	Galvanized & ALT2	Asphalt Coated	Asphalt Coated w/ Paved Invert	Smooth Cor™
54	0.064	50	66	84	84
	0.079	61	77	95	95
	0.109	83	100	118	118
	0.138	106	123	140	
	0.168	129	146	163	
60	0.064	55	73	93	93
	0.079	67	86	105	105
	0.109	92	110	130	130
	0.138	118	136	156	
	0.168	143	161	181	
66	0.064	60	80	102	102
	0.079	74	94	116	116
	0.109	101	121	143	145
	0.138	129	149	171	
	0.168	157	177	199	
72	0.064	66	88	111	112
	0.079	81	102	126	127
	0.109	110	132	156	157
	0.138	140	162	186	
	0.168	171	193	217	
78	0.064	71	95	121	120
	0.079	87	111	137	136
	0.109	119	143	169	168
	0.138	152	176	202	
	0.168	185	209	235	
84	0.064	77	102	130	130
	0.079	94	119	147	147
	0.109	128	154	182	181
	0.138	164	189	217	
	0.168	199	224	253	
90	0.064	82	109	140	139
	0.079	100	127	158	157
	0.109	137	164	195	194
	0.138	175	202	233	
	0.168	213	240	271	
96	0.064	87	116	149	148
	0.079	107	136	169	168
	0.109	147	176	209	208
	0.138	188	217	250	
	0.168	228	257	290	
102	0.064	93	124	158	158
	0.079	114	145	179	179
	0.109	155	186	220	222
	0.138	198	229	263	
	0.168	241	272	306	
108	0.079	120	153	188	189
	0.109	165	198	233	235
	0.138	211	244	279	
	0.168	256	289	324	
114	0.079	127	162	199	200
	0.109	174	209	246	248
	0.138	222	257	294	
	0.168	271	306	343	
120	0.079	134	171	210	211
	0.109	183	220	259	260
	0.138	234	271	310	
	0.168	284	321	360	
126	0.109	195	233	274	276
	0.138	247	285	326	
	0.168	299	338	378	
132	0.109	204	244	287	289
	0.138	259	299	342	
	0.168	314	354	397	
138	0.109	213	255	300	300
	0.138	270	312	357	
	0.168	328	370	415	
144	0.138	282	326	373	
	0.168	344	388	435	(2)

1. *Weights for polymer-coated pipe are 1% to 4% higher, varying by gage.*
2. *Please contact your Contech Sales Representative.*
3. *Weights listed in the 3" x 1" or 5" x 1" table are for 3" x 1" pipe. Weights for 5" x 1" are approximately 12% less than those used in this table, for metallic coated pipe.*

CORLIX® Corrugated Aluminum Pipe

Heights of Cover

2 2/3" X 1/2" Height of Cover Limits for Corrugated Aluminum Pipe

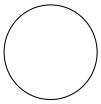

HL 93 Live Load

Diameter (in.)	Minimum Cover (in.)	Maximum Cover (ft.) Specified Thickness (in.) and Gage					
		(0.048) 18	(0.060) 16	(0.075) 14	(0.105) 12	(0.135) 10	(0.164) 8
6[4]	12	197	247				
8[4]	12	147	185				
10[4]	12	119	148				
12	12		125	157			
15	12		100	125			
18	12		83	104			
21	12		71	89			
24	12		62	78	109		
27	12			69	97		
30	12			62	87		
36	12			51	73	94	
42	12				62	80	
48	12				54	70	85
54	15				48	62	76
60	15					52	64
66	18						52
72	18						43

2 2/3" x 1/2" Height of Cover Limits for Corrugated Aluminum Pipe-Arch

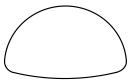

HL 93 Live Load

Size		Minimum Gage	Minimum Cover (in.)	Maximum Cover (ft.)
Round Equivalent (in.)	Span x Rise (in.)			2 Tons/Ft.2 for Corner Bearing Pressures
15	17 x 13	16	12	13
18	21 x 15	16	12	12
21	24 x 18	16	12	12
24	28 x 20	14	12	12
30	35 x 24	14	12	12
36	42 x 29	12	12	12
42	49 x 33	12	15	12
48	57 x 38	10	15	12
54	64 x 43	10	18	12
60	71 x 47	8[5]	18	12

Notes:

1. Height of cover is measured to top of rigid pavement or to bottom of flexible pavement.
2. Maximum cover meets AASHTO LRFD design criteria.
3. Minimum cover meets AASHTO and ASTM B 790 design criteria.
4. 1 1/2" x 1/4" corrugation.
5. 8 GA pipe has limited availability.
6. For construction loads, see page 15.
7. Consult your Contech Sales Representative for E 80 Live Loads.

Heights of Cover

3" x 1" Height of Cover Limits for Corrugated Aluminum Pipe

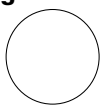

HL 93 Live Load

Diameter (in.)	Minimum Cover (in.)	Maximum Cover (ft.) Specified Thickness (in.) and Gage				
		(0.060) 16	(0.075) 14	(0.105) 12	(0.135) 10	(0.164) 8
30	12	57	72	101	135	159
36	12	47	60	84	112	132
42	12	40	51	72	96	113
48	12	35	44	62	84	99
54	15	31	39	55	74	88
60	15	28	35	50	67	79
66	18	25	32	45	61	72
72	18	23	29	41	56	66
78	21		27	38	51	61
84	21			35	48	56
90	24			33	44	52
96	24			31	41	49
102	24				39	46
108	24				37	43
114	24					39
120	24					36

3" x 1" Height of Cover Limits for Corrugated Aluminum Pipe-Arch



HL 93 Live Load

Size		Minimum Gage	Minimum Cover (in.)	Maximum Cover (ft.)
Round Equivalent (in.)	Span x Rise (in.)			2 Tons/Ft.2 for Corner Bearing Pressures
54	60 x 46	14	15	20
60	66 x 51	14	18	20
66	73 x 55	14	21	20
72	81 x 59	12	21	16
78[4]	87 x 63	12	24	16
84[4]	95 x 67	12	24	16
90[4]	103 x 71	10	24	16
96[4]	112 x 75	8[5]	24	16

Notes:

1. Height of cover is measured to top of rigid pavement or to bottom of flexible pavement.
2. Maximum cover meets AASHTO LRFD design criteria.
3. Minimum cover meets ASTM B 790 design criteria.
4. Limited availability on these sizes.
5. 8 GA pipe has limited availability.
6. For construction loads, see page 15.
7. Consult your Contech Sales Representative for E 80 Live Loads.

Approximate Weight/Foot
CORLIX® Corrugated Aluminum Pipe

(Estimated Average Weights—Not for Specification Use)

2 ⅔" x ½" Corrugation Aluminum Pipe						
Diameter (in.)	Weight (Lb./Lineal Ft.)[1] Specified Thickness (in.) and Gage					
	(0.048) 18	(0.060) 16	(0.075) 14	(0.105) 12	(0.135) 10	(0.164) 8
6[2]	1.3	1.6				
8[2]	1.7	2.1				
10[2]	2.1	2.6				
12		3.2	4.0			
15		4.0	4.9			
18		4.8	5.9			
21		5.6	6.9			
24		6.3	7.9	10.8		
27			8.8	12.2		
30			9.8	13.5		
36			11.8	16.3	20.7	
42				19.0	24.2	
48				21.7	27.6	33.5
54				24.4	31.1	37.7
60					34.6	41.9
66						46.0
72						50.1

3" x 1" Corrugation Aluminum Pipe					
Diameter (in.)	Weight (Lb./Lineal Ft.)[1] Specified Thickness (in.) and Gage				
	(0.060) 16	(0.075) 14	(0.105) 12	(0.135) 10	(0.164) 8
30	9.3	11.5	15.8	20.2	24.5
36	11.1	13.7	18.9	24.1	29.3
42	12.9	16.0	22.0	28.0	34.1
48	14.7	18.2	25.1	32.0	38.8
54	16.5	20.5	28.2	35.9	43.6
60	18.3	22.7	31.3	40.0	48.3
66	20.2	24.9	34.3	43.7	53.0
72	22.0	27.1	37.4	47.6	57.8
78		29.3	40.4	51.5	62.5
84			43.5	55.4	67.2
90			46.6	59.3	71.9
96			49.6	63.2	76.7
102				66.6	80.8
108				71.0	86.1
114					90.9
120					95.6

Notes:

1. *Helical lockseam pipe only. Annular riveted pipe weights will be higher.*
2. *1 ½" x ¼" Corrugation.*
3. *8 GA pipe has limited availability.*

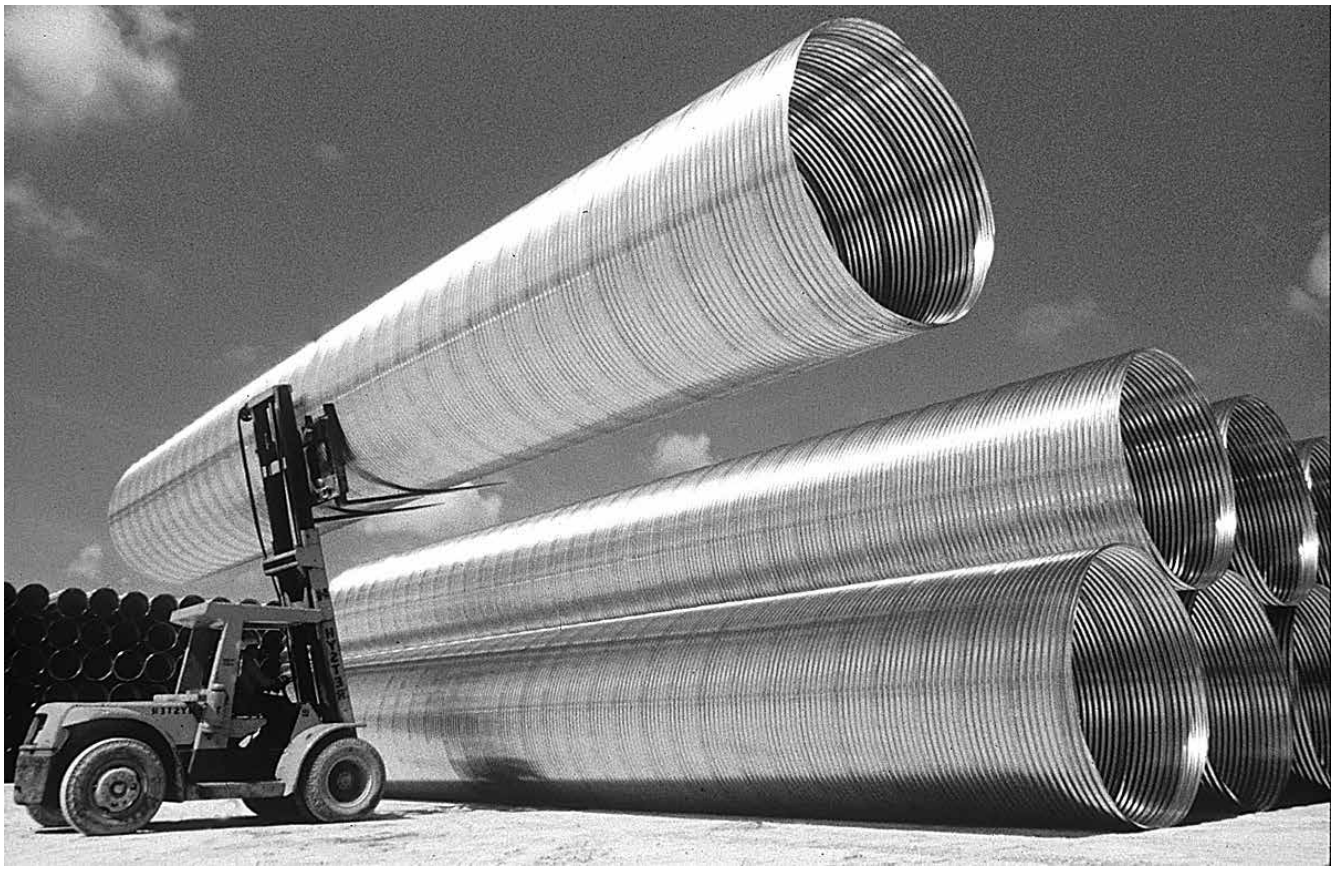

ULTRA FLO®

Heights of Cover

Galvanized, ALUMINIZED STEEL Type 2 or
Polymer-Coated Steel** ULTRA FLO® H 20 and H 25 Live Load

Diameter (in.)	Minimum/Maximum Cover (ft.) Specified Thickness (in.) and Gage			
	(0.064) 16	(0.079) 14	(0.109) 12	(0.138) 10
18	1.0 / 108	1.0 / 151		
21	1.0 / 93	1.0 / 130	1.0 / 216	
24	1.0 / 81	1.0 / 113	1.0 / 189	
30	1.0 / 65	1.0 / 91	1.0 / 151	
36	1.0 / 54	1.0 / 75	1.0 / 126	
42	1.0 / 46	1.0 / 65	1.0 / 108	
48	1.0 / 40	1.0 / 56	1.0 / 94	1.0 / 137
54	1.25 / 36	1.25 / 50	1.0 / 84	1.0 / 122
60	1.25*/32*	1.25 / 45	1.0 / 75	1.0 / 109
66		1.5 / 41	1.25 / 68	1.25 / 99
72		1.5*/37*	1.25 / 63	1.25 / 91
78		1.75*/34*	1.5 / 58	1.5 / 84
84			1.75 / 54	1.75 / 78
90			2.0*/50*	2.0 / 73
96			2.0*/47*	2.0 / 68
102			2.5*/43*	2.5 / 61
108				2.5*/54*
114				2.5*/49*
120				2.5*/43*

Galvanized, ALUMINIZED STEEL Type 2 or
Polymer-Coated Steel** ULTRA FLO® E 80 Live Load

Diameter (in.)	Minimum/Maximum Cover (ft.) Specified Thickness (in.) and Gage			
	(0.064) 16	(0.079) 14	(0.109) 12	(0.138) 10
18	1.0 / 93	1.0 / 130		
21	1.0 / 79	1.0 / 111	1.0 / 186	
24	1.0 / 69	1.0 / 97	1.0 / 162	
30	1.0 / 55	1.0 / 78	1.0 / 130	
36	1.5 / 46	1.25 / 65	1.0 / 108	
42	1.5 / 39	1.5 / 55	1.25 / 93	
48	2.0 / 34	1.75 / 48	1.5 / 81	1.5 / 118
54	3.0* / 28*	2.0 / 43	1.5 / 72	1.5 / 104
60		2.0 / 39	1.75 / 65	1.75 / 94
66		2.5* / 35*	2.0 / 58	2.0 / 85
72			2.0 / 49	2.0 / 78
78			2.5 / 42	2.5 / 72
84			2.75* / 35*	2.5 / 67
90				2.5 / 62
96				2.5* / 58*
102				3.0* / 52*

Galvanized, ALUMINIZED STEEL Type 2 or
Polymer-Coated Steel** ULTRA FLO® Pipe-Arch H 20 and H 25 Live Load

Round Equivalent (in.)	Span x Rise (in.)	Minimum/Maximum Cover (ft.) Specified Thickness (in.) and Gage		
		(0.064) 16	(0.079) 14	(0.109) 12
18	20 x 16	1.0 / 16		
21	23 x 19	1.0 / 15		
24	27 x 21	1.0 / 13		
30	33 x 26	1.0 / 13	1.0 / 13	
36	40 x 31	1.0 / 13	1.0 / 13	
42	46 x 36	M.L.[7]	M.L.[7]	1.0 / 13
48	53 x 41	M.L.[7]	M.L.[7]	1.25 / 13
54	60 x 46	M.L.[7]	M.L.[7]	1.25 / 13
60	66 x 51	M.L.[7]	M.L.[7]	1.25 / 13

Galvanized, ALUMINIZED STEEL Type 2 or
Polymer-Coated Steel** ULTRA FLO® Pipe-Arch E 80 Live Load

Round Equivalent (in.)	**Span x Rise (in.)**	**Minimum/Maximum Cover (ft.) Specified Thickness (in.) and Gage**	
		(0.064) 16	**(0.109) 12**
18	20 x 16	2.0 / 22	
21	23 x 19	2.0 / 21	
24	27 x 21	2.0 / 18	
30	33 x 26	2.0 / 18	
36	40 x 31	2.0 / 17	
42	46 x 36		2.0 / 18
48	53 x 41		2.0 / 18
54	60 x 46		2.0 / 18
60	66 x 51		2.0 / 18



Polymer-coated ULTRA FLO® provides added durability.

Notes:

1. *The tables for Steel H 20 and H 25 loading are based on the NCSPA Design Manual, 2018 and were calculated using a load factor of K=0.86. The tables for Steel E 80 loading are based on the AREMA Manual. The tables for Aluminum HL 93 loading are based on AASHTO LRFD Design Criteria.*
2. *The haunch areas of a pipe-arch are the most critical zone for backfilling. Extra care should be taken to provide good material and compaction to a point above the spring line.*
3. *E 80 minimum cover is measured from top of pipe to bottom of tie.*
4. *H 20, H 25 and HL 93 minimum cover is measured from top of pipe to bottom of flexible pavement or top of rigid pavement.*
5. *The pipe-arch tables are based on the corner bearing pressures as shown. These values may increase or decrease with changes in allowable corner bearing pressures. Consider the use of a round pipe in cases where the height of cover exceeds 8'.*
6. *Larger size pipe-arches may be available on special order.*
7. *M.L. (Heavier gage is required to prevent crimping at the haunches.)*
8. *For construction loads, see Page 15.*
9. *Sewer gage (trench conditions) tables for corrugated steel pipe can be found in the AISI book "Modern Sewer Design," 4th Edition, 1999. These tables may reduce the minimum gage (GA) due to a higher flexibility factor allowed for a trench condition.*
10. *All heights of cover are based on trench conditions. If embankment conditions exist, there may be restriction on gages for the large diameters. Your Contech Sales Representative can provide further guidance for a project in embankment conditions.*
11. *All steel ULTRA FLO® is installed in accordance with ASTM A798 "Installing Factory-Made Corrugated Steel Pipe for Sewers and Other Applications."*

* *These sizes and gage combinations are installed in accordance with ASTM A796 paragraphs 18.2.3 and ASTM A798. For aluminum ULTRA FLO® refer to ASTM B790 and B788.*

** *Contact your local Contech representative for more specific information on Polymer-Coated ULTRA FLO® for 12 GA and 10 GA.*

****Consult your Contech Sales Representative for E 80 Live Loads for Aluminum ULTRA FLO®.*

Heights of Cover

Aluminum ULTRA FLO® HL 93 Live Load

Diameter (in.)	Minimum/Maximum Cover (ft.) Specified Thickness (in.) and Gage			
	(0.060) 16	(0.075) 14	(0.105) 12	(0.135) 10
18	1.0/43	1.0/61		
21	1.0/38	1.0/52	1.0/84	
24	1.0/33	1.0/45	1.0/73	
30	1.25/26	1.25/36	1.25/58	
36	1.5*/21*	1.50/30	1.5/49	1.5/69
42		1.75*/25*	1.75/41	1.75/59
48			2.0/36	2.0/51
54			2.0/32	2.0/46
60			2.0*/29*	2.0/41
66				2.0/37
72				2.5*/34*

Aluminum ULTRA FLO® Pipe-Arch HL 93 Live Load

Size		Minimum/Maximum Cover (ft.) Specified Thickness (in.) and Gage			
Round Equivalent (in.)	Span x Rise (in.)	(0.060) 16	(0.075) 14	(0.105) 12	(0.135) 10
18	20 x 16	1.0/16			
21	23 x 19	1.0/15			
24	27 x 21	1.25/13	1.25/13		
30	33 x 26	1.5/13	1.5/13	1.5/13	
36	40 x 31		1.75/13	1.75/13	
42	46 x 36			2.0/13	2.0/13
48	53 x 41			2.0/13	2.0/13
54	60 x 46			2.0*/13*	2.0/13
60	66 x 51				2.0/13

See previous page for height of cover notes.

Approximate Weight/Foot Contech ULTRA FLO® Pipe

Handling Weight for **ALUMINIZED STEEL Type 2** or **Galvanized Steel** ULTRA FLO®

Diameter (in.)	Weight (Pounds/Lineal Foot) Specified Thickness (in.) and Gage			
	(0.064) 16	(0.079) 14	(0.109) 12	(0.138) 10
18	15	18		
21	17	21	29	
24	19	24	36	
30	24	30	42	
36	29	36	50	
42	33	42	58	
48	38	48	66	80
54	45	54	75	90
60	48	60	83	99
66		66	91	109
72		72	99	119
78		78	108	129
84			116	139
90			124	149
96			132	158
102			141	168
108				175
114				196
120				206

Handling Weight for **ALUMINUM** ULTRA FLO®

Diameter (in.)	Weight (Pounds/Lineal Foot) Specified Thickness (in.) and Gage			
	(0.060) 16	(0.075) 14	(0.105) 12	(0.135) 10
18	5	6		
21	6	8	11	
24	7	9	13	
30	9	11	15	
36	11	13	18	23
42		15	21	26
48			24	30
54			27	34
60			30	37
66				41
72				45

Weights for polymer-coated pipe are 1% to 4% higher, varying by gage.



ULTRA FLO® is available in long lengths, and its light weight allows it to be unloaded and handled with small equipment.



Reduced excavation due to the smaller outside diameter of ULTRA FLO®.

Installation of CMP

Overview
Satisfactory site preparation, trench excavation, bedding and backfill operations are essential to develop the strength of any flexible conduit. In order to obtain proper strength while preventing settlement, it is necessary that the soil envelope around the pipe be of good granular material, properly placed and carefully compacted.

Bedding
Bedding preparation is critical to both pipe performance and service life. The bed should be constructed to uniform line and grade to avoid distortions that may create undesirable stresses in the pipe and/or rapid deterioration of the roadway. The bed should be free of rock formations, protruding stones, frozen lumps, roots and other foreign matter that may cause unequal settlement.

Placing the pipe
Corrugated metal pipe weighs much less than other commonly used drainage structures. This is due to the efficient strength of the metal, further improved with carefully designed and formed corrugations. Even the heaviest sections of Contech pipe can be handled with relatively light equipment compared with equipment required for much heavier reinforced concrete pipe.

Backfill
Satisfactory backfill material, proper placement and compaction are key factors in obtaining maximum strength and stability. Backfill should be a well-graded granular material and should be free of large stones, frozen lumps and other debris.

Backfill materials should be placed in layers about six inches deep, deposited alternately on opposite sides of the pipe. Each layer should be compacted carefully. Select backfill is placed and compacted until minimum cover height is reached, at which point, standard road embankment backfill procedures are used.

Installation References
For more information, see AASHTO Bridge Construction Specification Section 26, the Installation Manual of the National Corrugated Steel Pipe Association, ASTM A798 for steel and ASTM B788 for aluminum ULTRA FLO®.

Additional Considerations for ULTRA FLO® Installations
Bedding and Backfill
Typical ULTRA FLO® installation requirements are the same as for any other corrugated metal pipe installed in a trench. Bedding and backfill materials for ULTRA FLO® follow the requirements of the CMP installation specifications mentioned above, and must be free from stones, frozen lumps or other debris. When ASTM A796 (steel) or B790 (aluminum) designs are to be followed for condition III requirements, indicated by asterisk (*) in the tables on page 13 and 14, use clean, easily compacted granular backfill materials.

Embankment Conditions
ULTRA FLO® is a superior CMP storm sewer product that is normally installed in a trench condition. In those unusual embankment installation conditions, pipe sizes and gages may be restricted. Your Contech Sales Representative can provide you with further guidance.

Construction Loads
For temporary construction vehicle loads, an extra amount of compacted cover may be required over the top of the pipe. The Height of Cover shall meet minimum requirements shown in the table below. The use of heavy construction equipment necessitates greater protection for the pipe than finished grade cover minimums for normal highway traffic.

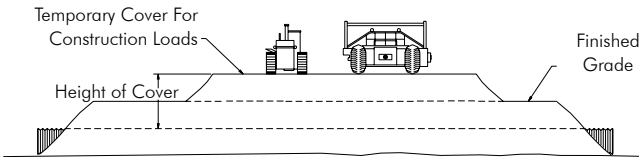

Min. Height of Cover Requirements for Construction Loads
HEL-COR® Corrugated Steel Pipe*

Diameter (in.)	Minimum Cover (ft.) for Indicated Axle Loads (kips)			
	18-50	50-75	75-110	110-150
12-42	2.0	2.5	3.0	3.0
48-72	3.0	3.0	3.5	4.0
78-120	3.0	3.5	4.0	4.0
126-144	3.5	4.0	4.5	4.5

Min. Height of Cover Requirements for Construction Loads
CORLIX® Corrugated Aluminum Pipe*

Diameter (in.)	Minimum Cover (ft.) for Indicated Axle Loads (kips)			
	18-50	50-75	75-110	110-150
12-42	3.0	3.5	4.0	4.0
48-72	4.0	4.0	5.0	5.5
78-120	4.0	5.0	5.5	5.5

Min. Height of Cover Requirements for Construction Loads
ULTRA FLO® Pipe*

Diameter (in.)	Minimum Cover (ft.) for Indicated Axle Loads (kips)			
	18-50	50-75	75-110	110-150
	Steel 3/4" x 3/4" x 7-1/2"			
15-42	2.0	2.5	3.0	3.0
48-72	3.0	3.0	3.5	4.0
78-108	3.0	3.5	4.0	4.5
	Aluminum 3/4" x 3/4" x 7-1/2"			
15-42	3.0	3.5	4.0	4.0

* *Minimum cover may vary depending on local conditions. The contractor must provide the additional cover required to avoid damage to the pipe. Minimum cover is measured from the top of the pipe to the top of the maintained construction roadway surface.*

Smooth Cor™ Pipe

Excellent Hydraulics, Long Lengths and Easy Installation

Corrugated Steel Shell

Smooth Cor pipe has a smooth interior steel liner that provides a Manning's "n" of 0.012. Its rugged, corrugated steel shell supplies the structural strength to outperform rigid pipe. Smooth Cor pipe is both the economical and performance alternate to concrete.

Superior hydraulics

Smooth Cor, with its smooth interior surface, is hydraulically superior to conventional corrugated steel pipe and with fewer joints and better interior surface, outperforms reinforced concrete pipe.

Smooth Cor, with its long lengths, light weight and beam strength, is superior to concrete pipe in many difficult situations such as poor soils, poor subsurface drainage conditions, steep slopes and high fills. Smooth Cor should be specified as an alternate under normal site conditions, and specified exclusively under very difficult situations that demand the strength of CSP with positive joints and a hydraulically efficient smooth liner.

Two Pipe Shapes

In addition to full-round pipe, Smooth Cor comes in a pipe-arch shape for limited headroom conditions. The low, wide pipe-arch design distributes the flow area horizontally, enabling it to be installed with lower head room than a round pipe.

Diameters

Smooth Cor is available in diameters ranging from 18 inches to 66 inches in 2 2/3" x 1/2" corrugation. The 3" x 1" corrugation is available in diameters of 48" to 126".

Pipe-arch sizes range from 21" x 15" through 77" x 52" for 2 2/3" x 1/2" corrugations, and 53" x 41" through 137" x 87" for 3" x 1" corrugations.

Materials

Smooth Cor is available with a heavy-gage polymer coating that allows the engineer to design for long service life. This coating is a tough, heavy-gage polymer film laminated to both sides of the steel coil, providing a barrier to corrosion and mild abrasion which is particularly effective for protection in corrosive soils.

Fittings

Smooth Cor can be fabricated into any type of structure including tees, elbows, laterals, catch basins, manifolds and reducers. Pre-fabricated fittings are more economical and have superior hydraulic characteristics when compared to concrete structures.

Structural Design

Reference specifications

Material	Polymer-Coated	ASTM A 929 AASHTO M246 ASTM A 742
Pipe	Polymer	AASHTO M245 ASTM A 762 & A 760
Design	Steel Pipe	AASHTO Section 12 ASTM A 796
Installation	Steel Pipe	AASHTO Section 26 ASTM A 798

Smooth Cor is lined with either 18 or 20 gage (GA) steel. Contech has taken a conservative approach to the Height of Cover. The maximum heights of cover are based on the shell thickness with no additional structural allowance for the liner as provided for in the AASHTO and ASTM design specifications. Using this approach, the Height of Cover tables for 2 2/3" x 1/2" and 3" x 1" steel corrugations can be used for Smooth Cor.

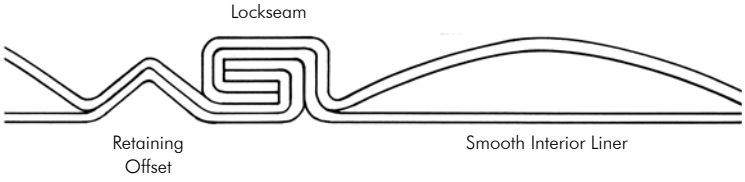



QUICK STAB® Joint

Save Time and Money With Faster Pipe Bell and Spigot Coupling

The Contech QUICK STAB Bell and Spigot joint speeds installation of corrugated metal pipe (CMP), reducing your costs. With the QUICK STAB coupling system, installation of CMP storm sewers and culverts has never been easier or faster.

The QUICK STAB joint creates a bell and spigot joining system with the bell only 1-1/2" larger than the pipe's O.D. Assembled at the factory, the QUICK STAB bell is shipped to the job site ready for installation. The only field operation is placing a special fluted gasket onto the spigot end of the pipe, applying lubricant and pushing it into the bell end of the preceding pipe. Without bands, bolts and wrenches to work and worry with, you can join pipe segments 50% to 90% faster—saving time, money and aggravation.

Soil Tight Joint

Contech's QUICK STAB joint provides the same soil tightness as conventional CMP bands. Each QUICK STAB joint uses a double sealing fluted gasket to seal the spigot against the bell. A flat gasket is installed at the plant between the pipe and the corrugated end of the bell. With the deep bell, you gain maximum soil tightness with minimal installation effort.

Wide Variety of Coatings and Materials

- Plain galvanized
- Aluminized Steel Type 2 (ALT2)
- Aluminum
- Polymeric coated

Four Times Faster Installation Than Concrete

The QUICK STAB's bell and spigot joining system allows pipe segments to be joined quicker than reinforced concrete pipe. Next, add in Contech's corrugated metal pipe's length advantage—each segment is four times longer than standard concrete pipe lengths. That means fewer joints and faster installation—up to four times faster! Plus, with the bell only 1-1/2" larger than the pipe, trench excavation is considerably less compared with concrete—again, saving time and money.

Field Installation Instructions

The spigot and bell ends must be cleaned of any dirt or debris prior to assembly. The fluted gasket shall be placed in the first corrugation with the lower flute nearest the end of the pipe. The bell & gasket shall be thoroughly lubed just before stabbing in the bell. Do not place hands, fingers, or any other body parts between bell and spigot during assembly. If it is necessary to pull the joint apart, the bell, spigot and gasket shall be inspected and cleaned of any dirt or debris prior to re-stabbing.

Corrugated Metal Pipe Bell and Spigot Joint Specification

The joints shall be of such design and the ends of the corrugated metal pipe sections so formed that the pipe can be laid together to make a continuous line of pipe. The joint shall be made from the same material as the pipe and shall prevent infiltration of the fill material.

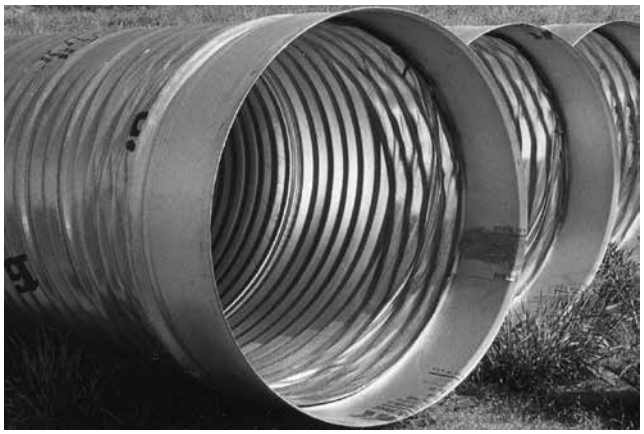

Bell and Spigot Coupling System for CMP

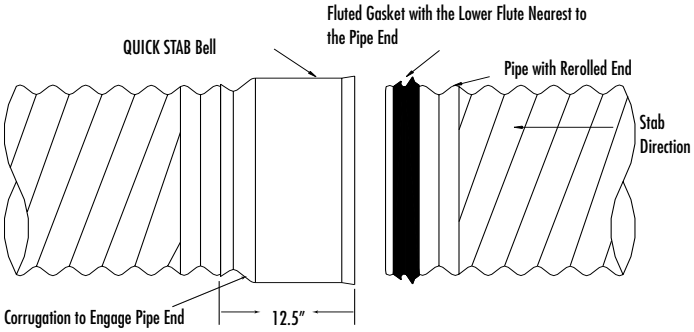

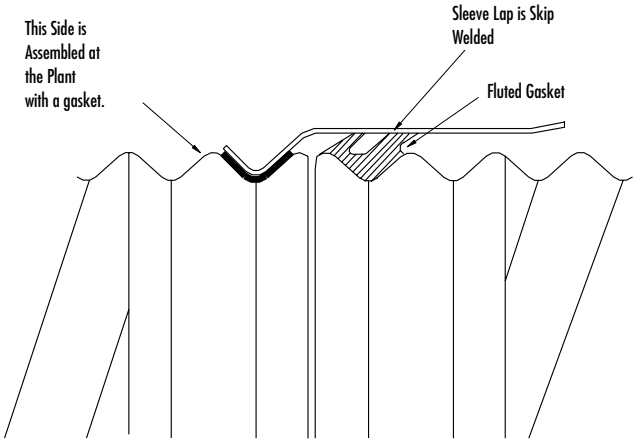

The Bell and Spigot joint is available on ULTRA FLO® and 2 2/3" x 1/2" corrugation in 15" through 60" diameter.

End Sections

Easily installed, easily maintained culvert end treatments for corrugated metal pipe, reinforced concrete pipe and HDPE Pipe

Contech End Sections provide a practical, economical and hydraulically superior method of finishing a variety of culvert materials.

The lightweight, flexible metal construction of Contech End Sections creates an attractive, durable and erosion-preventing treatment for all sizes of culvert inlets and outlets. They can be used with corrugated metal pipe having either annular or helical corrugations, and both reinforced concrete and plastic pipes. End sections can be salvaged when lengthening or relocating the culvert.

Standard End Sections are fabricated from pregalvanized steel. For added corrosion resistance, Aluminized Type 2 or Aluminum End Sections are available in smaller sizes. Special End Sections for multiple pipe installations may be available on a specific inquiry basis.

Better hydraulics

Flow characteristics are greatly improved by the exacting design of Contech End Sections. Scour and sedimentation conditions are improved, and headwater depth can be better controlled. Culverts aligned with the stream flow and finished with Contech End Sections generally require no additional hydraulic controls.

Improved appearance

Contech End Sections blend well with the surroundings. The tapered sides of an End Section merge with slope design to improve roadside appearance. Unsightly weeds and debris collection at the culvert end are reduced.

Economical installation

Lightweight equipment and simple crew instructions result in smooth and easy installation. Contech End Sections are easily joined to culvert barrels, forming a continuous, one-piece structure. For easiest installation, End Sections should be installed at the same time as the culvert. Installation is completed by tamping soil around the End Section.

Low maintenance

Contech End Sections reduce maintenance expense because their tapered design promotes easier mowing and snow removal. There is no obstruction to hamper weed cutting.

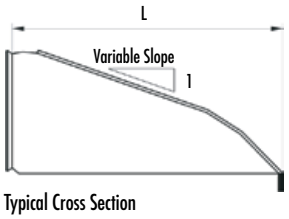

Typical Cross Section

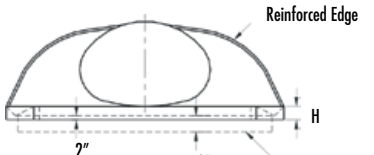

Elevation

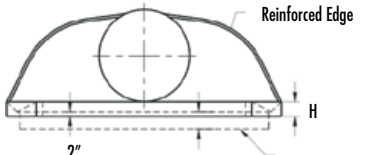

Elevation

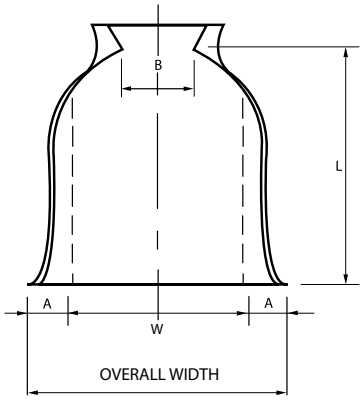

Plan

Notes for all End Sections:

1. All three-piece bodies to have 12 GA sides and 10 GA center panels. Multiple panel bodies to have lap seams which are to be tightly joined by galvanized rivets or bolts.
2. For 60" through 84" sizes, reinforced edges are supplemented with stiffener angles. The angles are attached by galvanized nuts and bolts. For the 66" and 72" round equivalent pipe-arch sizes, reinforced edges are supplemented by angles. The angles are attached by galvanized nuts and bolts.
3. Angle reinforcements are placed under the center panel seams on the 66" and 72" round equivalent pipe-arch sizes.
4. Toe plate is available as an accessory, when specified on the order, and will be same gage (GA) as the End Section.
5. Stiffener angles, angle reinforcement, and toe plates are the same base metal as end section body.
6. **End sections with 6:1 and 4:1 slopes are available in 12" through 24" diameters.**
7. Actual dimensions may vary slightly.
8. During manufacturing, a slight invert slope may result along the length of the end section to be accommodated in the field.

End Sections for Round Pipe (2-2/3" x 1/2", 3" x 1" and 5" x 1")							
Approximate Dimensions, Inches [7]							
Pipe Diameter	Gage	A (+/- 1")	B (Max)	H (Min)	L (+/-2")	W (+/- 2")	Overall Width (+/- 4")
12	16	6	6	6	21	24	36
15	16	7	8	6	26	30	44
18	16	8	10	6	31	36	52
21	16	9	12	6	36	42	60
24	16	10	13	6	41	48	68
30	14	12	16	8	51	60	84
36	14	14	19	9	60	72	100
42	12	16	22	11	69	84	116
48	12	18	27	12	78	90	126
54	12	18	30	12	84	102	138
60	12/10	18	33	12	87	114	150
66	12/10	18	36	12	87	120	156
72	12/10	18	39	12	87	126	162
78	12/10	18	42	12	87	132	168
84	12/10	18	45	12	87	138	174

End Sections for Pipe-Arch (2-2/3" x 1/2")								
Approximate Dimensions, Inches [7]								
Round Equivalent	Span x Rise (in.)	Gage	A (+/- 1")	B (Max)	H (+/- 1")	L (+/- 2")	W (+/- 2")	Overall Width (+/- 4")
15	17 x 13	16	7	9	6	19	30	44
18	21 x 15	16	7	10	6	23	36	50
21	24 x 18	16	8	12	6	28	42	58
24	28 x 20	16	9	14	6	32	48	66
30	35 x 24	14	10	16	6	39	60	80
36	42 x 29	14	12	18	8	46	75	99
42	49 x 33	12	13	21	9	53	85	111
48	57 x 38	12	18	26	12	63	90	126
54	64 x 43	12	18	30	12	70	102	138
60	71 x 47	12/10	18	33	12	77	114	150
66	77 x 52	12/10	18	36	12	77	126	162
72	83 x 57	12/10	18	39	12	77	138	174

End Sections for Pipe-Arch (3" x 1" and 5" x 1")								
Approximate Dimensions, Inches [7]								
Round Equivalent	Span x Rise (in.)	Gage	A (+/- 1")	B (Max)	H (+/- 1")	W (+/- 2")	L (+/- 2")	Overall Width (+/- 4")
48	53 x 41	12	18	25	12	90	63	126
54	60 x 46	12	18	34	12	102	70	138
60	66 x 51	12/10	18	33	12	116	77	152
66	73 x 55	12/10	18	36	12	126	77	162
72	81 x 59	12/10	18	39	12	138	77	174
78	87 x 63	12/10	20	38	12	148	77	188
84	95 x 67	12/10	20	34	12	162	87	202
90	103 x 71	12/10	20	38	12	174	87	214
96	112 x 75	12/10	20	40	12	174	87	214

Contech End Sections attach to corrugated metal pipe, reinforced concrete and plastic pipe.

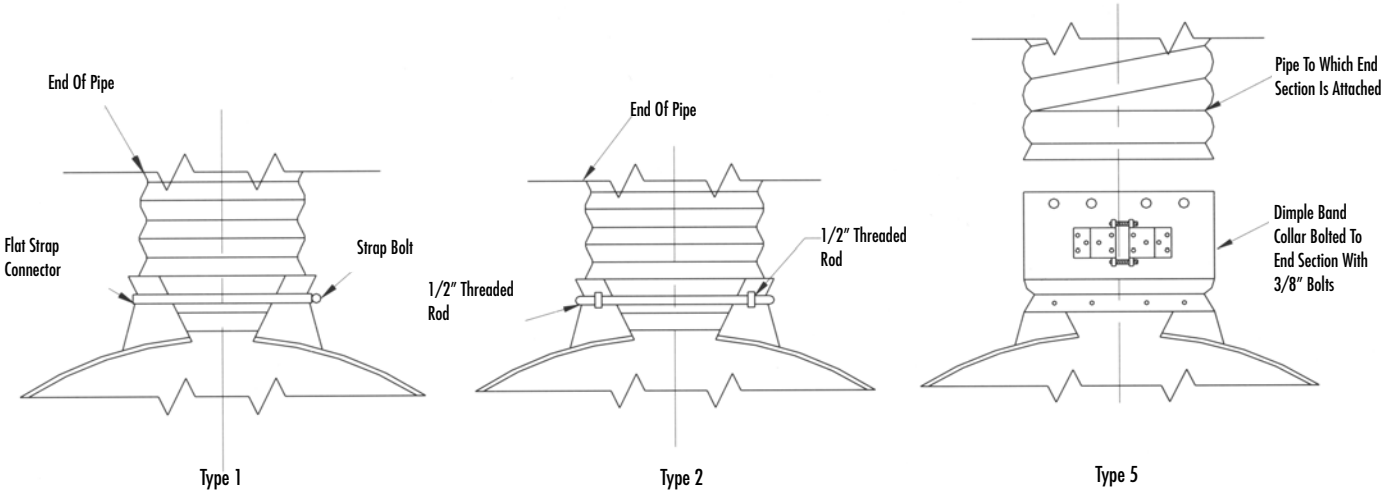

Note: *The Type 3 connection is not illustrated. This connection is a one-foot length of pipe attached to the end section.*



Multiple End Section on Round CSP



End Sections are available for CSP Pipe-Arch



Contech End Sections are often used on concrete pipe. They can be used on both the bell and spigot end.



Low-slope End Sections—Contech manufactures 4:1 and 6:1 low-slope End Sections for corrugated metal pipe. This photo shows the optional field-attached safety bars.

Contech® Engineered Solutions provides innovative, cost-effective site solutions to engineers, contractors and developers on projects across North America. Our portfolio includes bridges, drainage, erosion control, retaining wall, sanitary sewer and stormwater management products.

For more information, call one of Contech's Regional Offices located in the following cities:

Ohio (Corporate Office) 513-645-7000
California (Roseville) 800-548-4667
Colorado (Denver) 720-587-2700
Florida (Orlando) 321-348-3520
Maine (Scarborough) 207-885-9830
Maryland (Baltimore) 410-740-8490
Oregon (Portland) 503-258-3180
Texas (Dallas) 972-590-2000

www.ContechES.com | 800-338-1122

NOTHING IN THIS CATALOG SHOULD BE CONSTRUED AS A WARRANTY. APPLICATIONS SUGGESTED HEREIN ARE DESCRIBED ONLY TO HELP READERS MAKE THEIR OWN EVALUATIONS AND DECISIONS, AND ARE NEITHER GUARANTEES NOR WARRANTIES OF SUITABILITY FOR ANY APPLICATION. CONTECH MAKES NO WARRANTY WHATSOEVER, EXPRESS OR IMPLIED, RELATED TO THE APPLICATIONS, MATERIALS, COATINGS, OR PRODUCTS DISCUSSED HEREIN. ALL IMPLIED WARRANTIES OF MERCHANTABILITY AND ALL IMPLIED WARRANTIES OF FITNESS FOR ANY PARTICULAR PURPOSE ARE DISCLAIMED BY CONTECH. SEE CONTECH'S CONDITIONS OF SALE (AVAILABLE AT WWW.CONTECHES.COM/COS) FOR MORE INFORMATION.

CONTECH® ENGINEERED SOLUTIONS A QUIKRETE® COMPANY

BRO-CMP-DESIGN 4/7/2025 (PDF - 4/24/2025)

© 2025 Contech Engineered Solutions LLC, a QUIKRETE Company
All rights reserved. Printed in USA.

CONTECH®
ENGINEERED SOLUTIONS

ATTACHMENT 5

CMP Installation Guide





Preface

This instruction book is for your crews. Distribute it to help them install Contech® corrugated metal pipe (CMP) correctly. Proper installation of a flexible CMP culvert and storm drain systems will ensure long-term performance. CMP culverts and storm drains are typically of a single round or single pipe arch in an embankment of trench condition. However, it is not uncommon to install multi-barrel systems to meet the site-specific hydraulic conditions. Therefore, as the pipe diameter becomes larger or has multiple barrels the installation often requires special construction practices that differ from conventional small diameter (i.e.< 48" diameter) trench condition flexible pipe installation. Contech strongly suggests scheduling a pre-construction meeting with your local Sales Engineer to determine if additional measures, not covered in this guide, are appropriate for your site. All OSHSA and local safety guidelines should be observed during the construction of the system and site.

Don't assume experienced workers know all the answers. Review these instructions with your supervisors and crews. It can mean a safer and better job for you and your customer. We recommend holding a preconstruction meeting with your Contech representative and all interested parties to ensure everyone involved in your project has a high level of understanding on what means and methods will be used to prepare for, install and grout the new structure(s). If you have any questions about these instructions, call your Contech Representative.

Contents Page

Unloading and Safety Instructions 3

Foundation and Pipe Bedding 5

Connecting Bands 6

In Situ Trench Wall 8

Backfill Material 8

Backfill Placement 9

Backfill Placement for Multiple Barrels 10

Final Cover Placement and Construction Loading 11

Manhole Risers 12

Pipe End Treatment 14

Skewed Ends 15

TERMS YOU SHOULD KNOW

⚠WARNING

Alerts you to hazards or unsafe practices that CAN result in severe personal injury or property damage.

SAFETY INSTRUCTIONS

Messages about procedures or actions that must be followed for safe handling and installation of CMP Pipe. Failure to follow these instructions can result in serious injury or death and/or damage to the pipe.

Unloading and Handling

The following equipment is recommended for unloading pipe or pipe bundles:

- Forklift
- Front-end loader with fork adapters
- Backhoe with fork adapters
- Cranes
- Non-metallic slings

Other unloading methods such as lifting lugs, chains, wire rope, cinching or hooks in the end of the pipe should not be used.

General

1. Contech recommends the use of non-metallic slings for all pipe handling requirements.
2. Hooks, chains or wire rope may damage the pipe.
3. **⚠WARNING** Do not push bundles off the trailer or permit pipe to drop to the ground.

Safety Instructions

1. Only trained and authorized equipment operators are to be permitted to unload the trailer.
2. Wear approved safety hat and shoes, gloves and eye protection.
3. ⚠ **Pipe ends may be sharp. Workers handling pipe must wear gloves made from cut-resistant materials.**
4. Park the truck and trailer on level ground before you start unloading. It is the responsibility of the consignee to direct the driver to level ground for parking the truck.
5. Keep all unauthorized persons clear of the area when the driver releases the binders from the trailer and during unloading.
6. ⚠ **Sometimes pipes are bundled together on the truck with steel straps. Do not cut the steel strapping around the bundles until the bundles have been placed on level ground, blocked or secured, and will not be moved again as a unit. It is recommended that the steel strapping be cut with appropriate sized cutting tools. Stand to the side when cutting a strap. Always be aware that pipe may move, roll or fall when a strap is cut.**
7. **⚠WARNING** **Do not lift bundles or sections of pipe by the steel strapping around the bundles.**
8. Know the capabilities and rated load capacities of your lifting equipment. Never exceed them.
9. **⚠WARNING** **Do not stand or ride on the load of pipe while it is being unloaded. Do not stand beneath or near the pipe while it is being unloaded.**
10. If unloading at multiple drop-off points, secure the remaining load and pallets between drop off points. Always unload the top pallets or bundles first.
11. The contractor shall be responsible for the safety of his/her employees and agents. Adequate safety indoctrination is his responsibility and shall be given to all personnel employed by his firm.
12. Safe practices on construction work as outlined in the latest edition of the "Manual of Accident Prevention in Construction," published by the Associated General Contractors, shall be used as a guide and observed.
13. The contractor shall comply with all applicable city, state, and federal safety codes in effect in the area where he is performing the work. This conformance shall include the provisions of the current issue of the "OSHA Safety and Health Standards (29 CFR 1926/1910)" as published by the U.S. Department of Labor.

Proper Pipe Unloading, Handling & Placement

The pipe should be unloaded off the flatbed trailer with a forklift, excavator, crane or other piece of construction equipment. The pipe should never be dropped or pushed off the flatbed trailer. Nylon slings may wrap around the pipe or steel chains may be used to connect to pipe attached lifting lugs for both unloading and placement of the pipe sections.

Pipe installation typically starts at the downstream end and progresses upstream. Sometimes the pipe is lettered or numbered to show which pipe ends should be connected. This is called match marking the ends.



Lifting CMP off the flatbed with a front end loader and forks



Lifting Aluminized Type 2 (ALT2) CMP with nylon slings



Lifting CMP utilizing factory attached lifting lugs



Lifting polymer-coated CMP with nylon straps

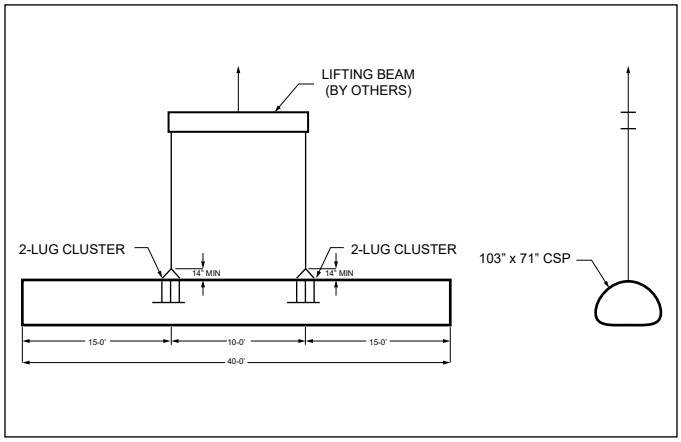

A spreader bar can be used for heavier and long length pipe.



Spreader bar used to lift CMP custom fitting.

Foundation and Pipe Bedding

Construct a foundation that can support the design loading applied by the pipe and adjacent backfill weight as well as maintain its integrity during construction. If soft or unsuitable soils are encountered, remove the poor soils to a suitable depth and then replace with a competent granular material to the appropriate elevation. The granular material gradation should not allow the migration of fines, which can cause settlement of the pipe system or pavement above. If the structural fill material is not compatible with the underlying soils a geotextile fabric should be used as a separator.

Grade the foundation subgrade to a uniform or slightly sloping grade. If the subgrade is clay or relatively non-porous and the construction sequence will last for an extended period, it is best to slope the grade to the outlet end of the system. This will allow excess water to drain quickly, preventing saturation of the subgrade.

A 4" – 6" thick, well-graded granular material is preferred for the pipe bedding. If the existing foundation is made up of a coarse sand or other suitable granular material, imported bedding material may not be required.

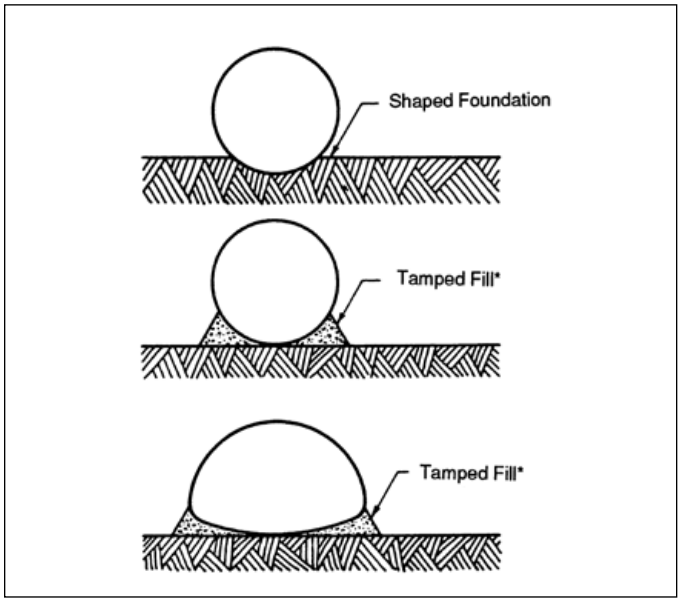

Methods for attaining proper compaction under haunches of CMP and pipe-arch.

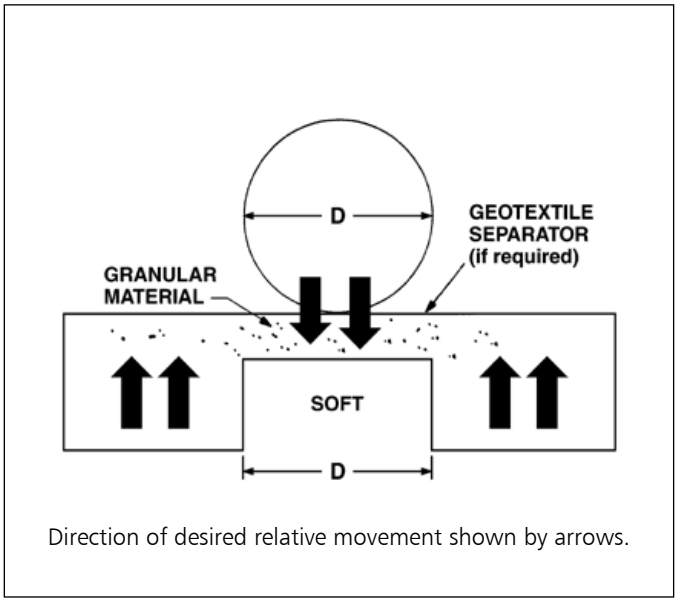

Treatment for Soft Foundations



Typical storm sewer with 4" – 6" of import granular material as pipe bedding.



Culvert foundation required undercutting and importing 18" of granular fill for pipe bedding.

Connecting Bands

There are various types of connecting bands for connecting CMP. HUGGER® bands and corrugated bands are the most common. Flat gaskets or O-ring gaskets can also be used in conjunction with connecting bands to reduce leakage in the joints



Installing a HUGGER® band on a perforated CMP.



Tightening bolts on a corrugated band.



Placement of flat neoprene basket on end of CMP



Installation of corrugated band with flat neoprene gasket

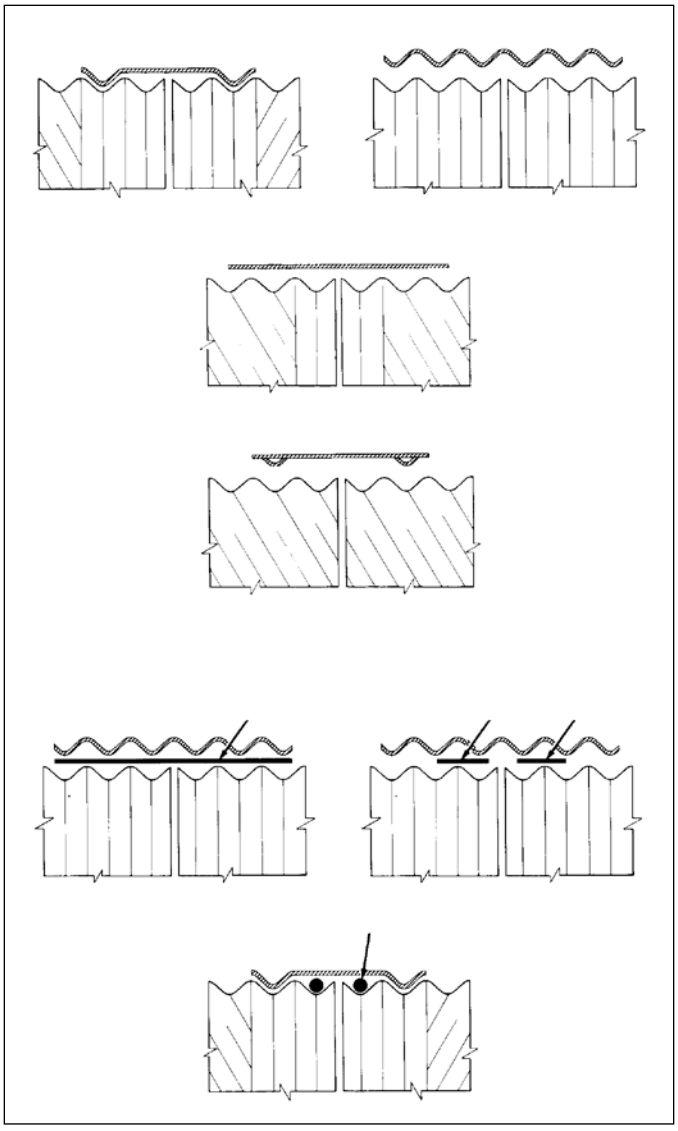

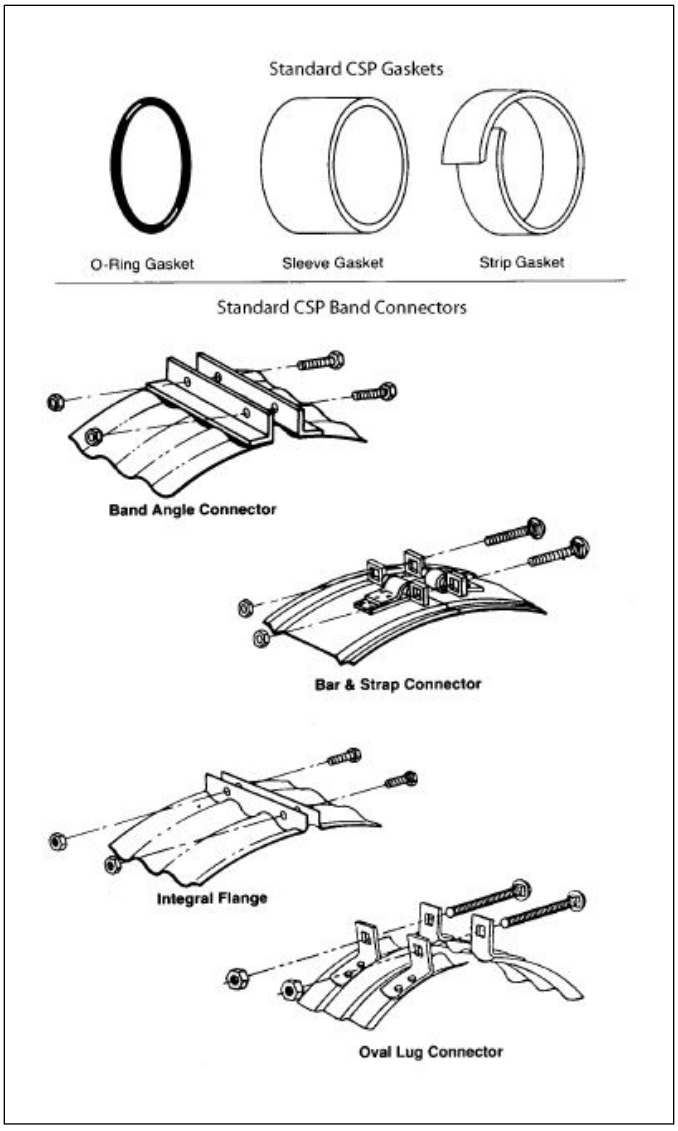







Some jobs may require special bands, such as rod and lug connection, flat bands, or dimple bands.

In-Situ Trench Wall

If excavation is required, the trench wall needs to be capable of supporting the radial loads that the pipe generates as the system is loaded. If soils are not capable of supporting these loads, the pipe can deflect. Perform a simple soil pressure check using the applied loads to determine the limits of excavation beyond the spring line of the outer most pipes.

In most cases, the trench width requirements for a safe work environment and proper backfill placement and compaction take care of the concern.



Backfill Material

Corrugated Metal Pipe is a flexible pipe. All buried flexible pipes are dependent on a quality backfill material for structural support. AASHTO refers to these pipe systems as, "Soil-Corrugated Metal Structure Interaction Systems". During placement of backfill and cover the pipe will slightly deflect under load (<2% optimal). When this occurs the pipe wall goes into Ring Compression and the backfill over the pipe forms a soil arch helping to distribute the load onto side backfill of the pipe or multiple barrel pipes. Therefore, compaction in equal lifts on either side of the pipe is so important.

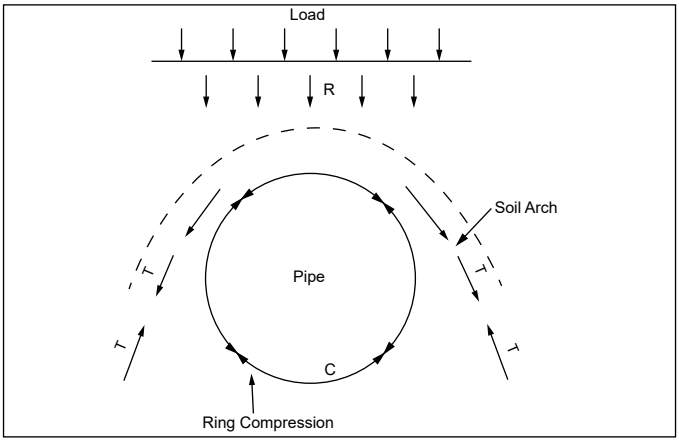

Diagram showing how load Pv is partly carried by means of a soil arch over the pipe.

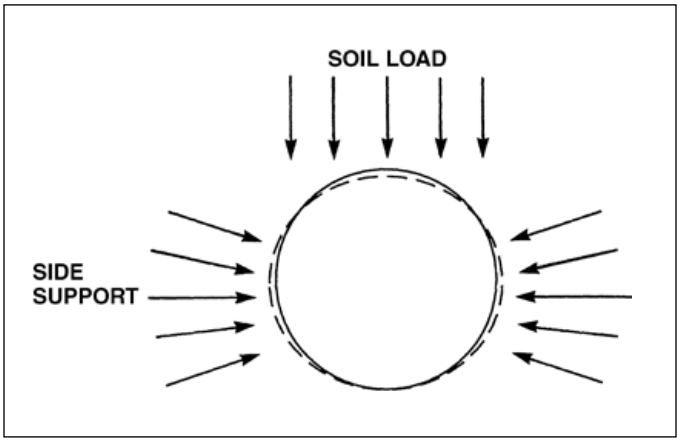

Pipe side support is developed by slight pipe deflection under load.

The best backfill material is an angular, well-graded, granular fill meeting the requirements of AASHTO A-1, A-2, or A-3. Aggregate materials that are free draining and compact easily such as crushed aggregate, crushed aggregate with fines, gravely sand, and coarse sand make good backfill. The aggregate particle size shall not exceed 3" in diameter.

For solid pipe, well graded or open graded granular material can be used as backfill. Infiltration pipe systems have a pipe perforation sized of 3/8" diameter. An open graded stone, with a particle size of ½" – 2 ½" diameter is recommended for backfill around perforated pipe.

Backfill using controlled low-strength material (CLSM, "flash fill", or "flowable fill") when the spacing between the pipes will not allow for placement and adequate compaction of the backfill. Below are examples of acceptable backfill materials

Examples of Acceptable Backfill Material



Coarse Sand



Crushed Limestone



Crushed Granite



Crushed River Gravel

Backfill Placement

The backfill shall be placed in 8" +/- loose lifts and compact to 90% AASHTO T99 standard proctor density. Material shall be worked into the pipe haunches by means of shovel-slicing, rodding, vibratory packer, or other effective methods. If AASHTO T99 procedures are determined infeasible by the geotechnical engineer of record, compaction is considered adequate when no further yielding of the material is observed under the compactor, or under foot, and the geotechnical engineer of record (or representative thereof) is satisfied with the level of compaction.

For large systems, conveyor systems, backhoes with long reaches may be used to place backfill. Once minimum cover for the construction loading across the entire width of the system is reached, advance the equipment to the end of the recently placed fill, and begin the sequence again until the system is completely backfilled. This type of construction sequence provides room for stockpiled backfill directly behind the backhoe, as well as the movement of construction traffic. It is important to keep the elevation of backfill between pipes evenly. As a rule of thumb, do not allow for backfill to exceed the elevation of one side of pipe to the other by more than 24".

Material stockpiles on top of the backfilled pipe system should be limited to 9′ +/- high and must provide balanced loading across all barrels. To determine the proper minimum cover over the pipes to allow the movement of construction equipment, refer to the Construction Equipment Loading Tables in this guide, or contact your local Contech Sales Engineer.

If CLSM or "flowable fill" is used as backfill, pipe flotation needs to be prevented. Typically, small lifts are placed between the pipes and then allowed to set-up prior to the placement of the next lift. The allowable thickness of the CLSM lift is a function of a proper balance between the uplift force of the CLSM, the opposing weight of the pipe, and the effect of other restraining measures. Your local Sales Engineer can help determine an appropriate lift thickness.

Pipe Arch shapes require special attention. The bedding should be firm, but slightly yielding under the pipe. A vee-shaped bedding for large pipe arched should be considered. Proper care should be given to make sure quality compaction at the haunches of the pipe arch is completed. The haunch area backfill should be a high quality granular aggregate material, compacted to a minimum of 95% to prevent deflection of the pipe.

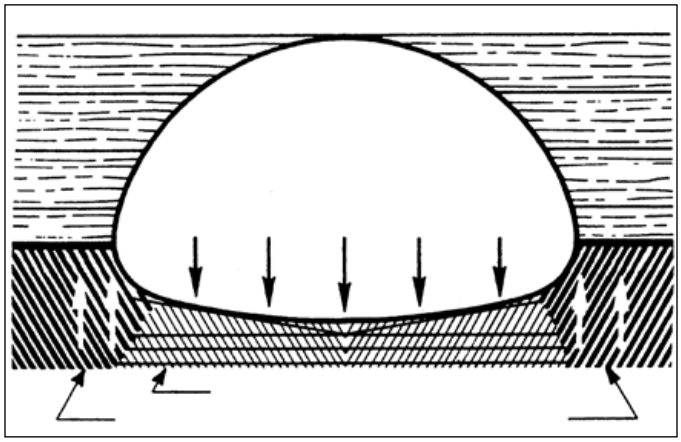

Recommended backfilling practice for larger pipe-arch, using a vee-shaped bed.



Example of backfilling for a larger pipe-arch installation.

Backfill Placement for Multi-Barrel Pipe Installation

Multi-barrel culvert installations need special attention during the backfilling process. It is important to keep the elevation of backfill between pipes evenly. As a rule of thumb, do not allow for backfill to exceed the elevation of one side of pipe to the other by more than 24". The drawings below show how proper sequencing of backfill should proceed to prevent pipe racking or pipe deflection.

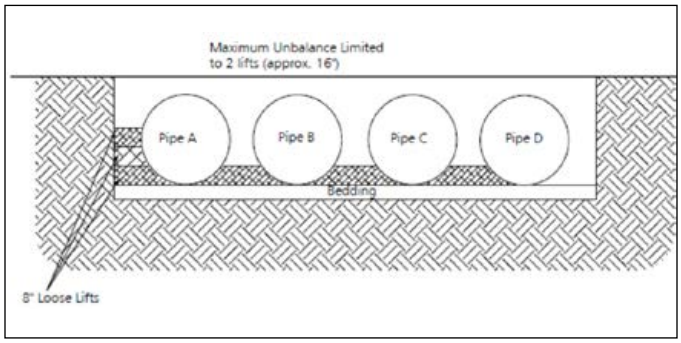

Detail for Maximum Unbalanced Limit

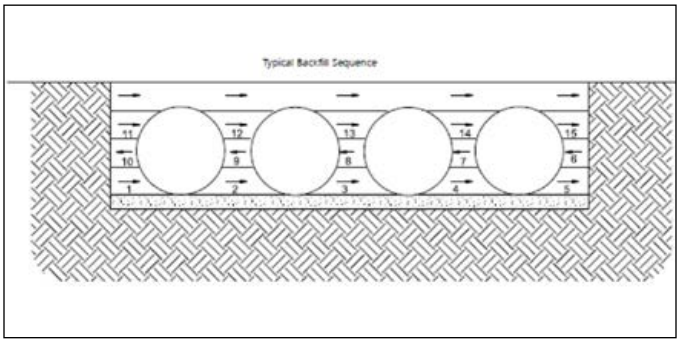

Detail for Typical Backfill Sequence





Examples of Multi-Barrel CMP Culverts

Final Cover Placement and Construction Loading

The minimum cover specified for a project normally assumes H-20 highway live loading. Backfill must be placed and fully compacted to the minimum cover level over the structure before the pipe is subjected to design loads. The minimum cover for AASHTO H-20 Live Loading per design section 12, is span of the pipe divided by eight plus asphalt pavement.

Construction loads often exceed design highway loading. During construction, keep heavy construction equipment that exceeds legal highway loads off the pipe. Light construction equipment on tracks such as a D-3 dozer (or lighter weight) may cross over the pipe when a minimum of 12" of compacted backfill is over pipe. Since construction equipment varies from job to job, it is best to address equipment specific minimum cover requirements with your local Contech Sales Engineer during your pre-construction meeting.

Minimum Height of Cover Requirements for Tracked Equipment
HEL-COR® Corrugated Steel Pipe[1]

Diameter (inches)	Minimum Cover (Ft)	Track Width (inches) Maximum Track Pressure at Surface (psi)			
		12	18	24	30
12 – 42	1.0	29	22	18	17
	1.5	58	41	34	30
	2.0	95	65	51	44
	2.5	138	91	70	59
	3.0	189	120	91	75
	4.0	321	195	143	115
48 – 66	1.0	10.6	8.0	6.9	6.2
	1.5	24	17	14.0	12.2
	2.0	39	26	21	18
	2.5	56	37	28	24
	3.0	77	49	37	30
	4.0	132	80	59	47
72 – 96	1.0	3.2	2.5	2.1	1.9
	1.5	8.8	6.2	5.0	4.4
	2.0	16	11.1	8.8	7.5
	2.5	24	15.0	12.0	10.1
	3.0	32	20	15	12.9
	4.0	56	34	25	20
102 – 120	1.0	2.8	2.1	1.7	1.6
	1.5	6.9	4.9	3.9	3.4
	2.0	14.8	10.1	8.0	6.7
	2.5	21	14.2	10.9	9.1
	3.0	29	18	14.1	11.6
	4.0	51	31	22	18
126 – 144	1.0	2.8	2.1	1.7	1.5
	1.5	6.0	4.3	3.5	3.0
	2.0	12.0	8.0	6.4	5.4
	2.5	21	14.0	10.6	8.9
	3.0	29	18	13.9	11.4
	4.0	50	30	22	18

1 The values in this table represent the maximum ground pressure permitted when performing reasonable work over the pipes, using the manufacture's published equipment specifications. (Ground pressure for track equipment is the vehicle operating weight divided by the total ground contact area for both tracks.) This table is to be used as a guide. Talk to your Contech representative if you have questions about the equipment you plan on operating over the pipes. Care should be taken to maintain adequate cover depth during construction activities.





Examples of light, tracked, construction equipment used to place final cover over the pipe system.





Examples of heavy construction equipment that may require additional minimal cover. Contech can help evaluate minimum cover for the installation contractor for all the equipment on the site.

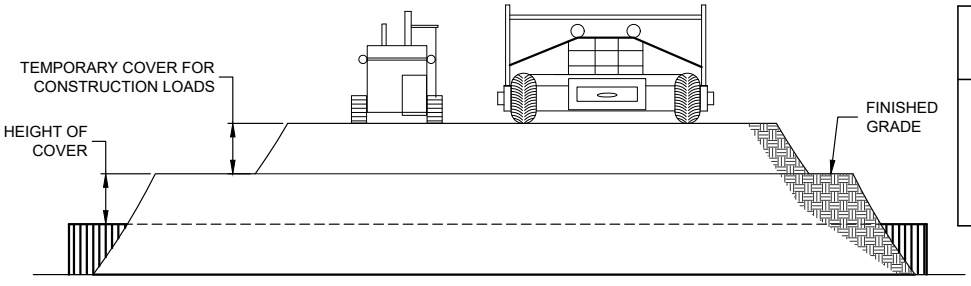

Minimum Height of Cover Requirements for Rubber-Tired Equipment Over HEL-COR® CSP

PIPE SPAN, INCHES	AXLE LOADS (kips)			
	18-50	50-75	75-110	110-150
	MINIMUM COVER (FT)			
12-42	2.0	2.5	3.0	3.0
48-72	3.0	3.0	3.5	4.0
78-120	3.0	3.5	4.0	4.0
126-144	3.5	4.0	4.5	4.5

CONSTRUCTION LOADS

FOR TEMPORARY CONSTRUCTION VEHICLE LOADS, AN EXTRA AMOUNT OF COMPACTED COVER MAY BE REQUIRED OVER THE TOP OF THE PIPE. THE HEIGHT-OF-COVER SHALL MEET THE MINIMUM REQUIREMENTS SHOWN IN THE TABLE BELOW. THE USE OF HEAVY CONSTRUCTION EQUIPMENT NECESSITATES GREATER PROTECTION FOR THE PIPE THAN FINISHED GRADE COVER MINIMUMS FOR NORMAL HIGHWAY TRAFFIC.

CMP Manhole Risers

CMP manhole risers allow easy access for future maintenance of the system. If the system is installed under a parking lot or road way subject to live loads, care must be taken to ensure loads are not applied directly to the riser structure. A pre-cast or cast-in-place slab should be installed above the riser. The manhole lid and frame should not rest directly on the CMP riser.

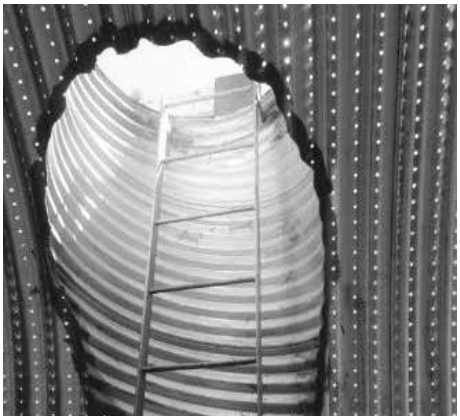





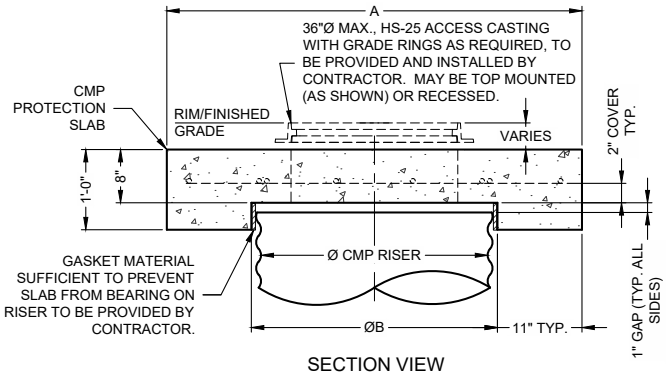

SECTION VIEW

Reinforcing Table				
Ø CMP Riser	A	ØB	Reinforcing	Bearing Pressure** (psf)
24	4′Ø 4′ x 4′	26″	#5 @ 10″ OCEW #5 @ 10″ OCEW	2,540 1,900
30″	4′-6″Ø 4′-6″ x 4′-6″	32″	#5 @ 10″ OCEW #5 @ 9″ OCEW	2,260 1,670
36″	5′Ø 5′ x 5′	38″	#5 @ 9″ OCEW #5 @ 8″ OCEW	2,060 1,500
42″	5′-6″Ø 5′-6″ x 5′-6″	44″	#5 @ 8″ OCEW #5 @ 8″ OCEW	1,490 1,370
48″	6′Ø 6′ x 6′	50″	#5 @ 7″ OCEW #5 @ 7″ OCEW	1,210 1,270

*** Assumed soil bearing capacity.*

Precast Option for Manhole Riser Caps



PLAN VIEW

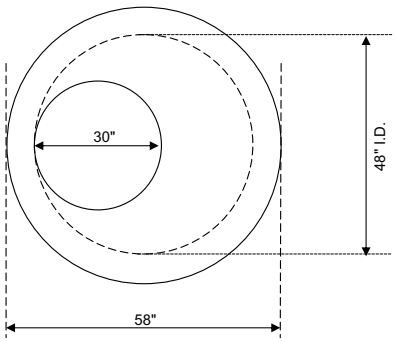

SECTION

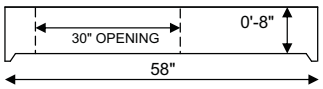

NOTES:

A.) 4000 P.S.I. CONCRETE

B.) GRADE 60 REINFORCING PER ASTM A-615

C.) BUTYL SEALANT IN JOINTS

Precast Cap Details

- Heavy Duty 4,000 psi concrete
- Standard HS25 Loading
- Available for risers up to 72-inch
- Precast Cap – ASTM A615, Grade 60
- Frame & Grate/Cover – ASTM A48

Pipe End Treatment

Corrugated metal pipe end treatments can consist of squared end pipe with rip rap, metal end sections, concrete headwalls, metal headwalls, skewed ends, and beveled ends. For large diameter CMP culverts, beveled ends are popular for hydraulic improvement. Beveled cut ends can be cost-effective for large diameter end treatments.





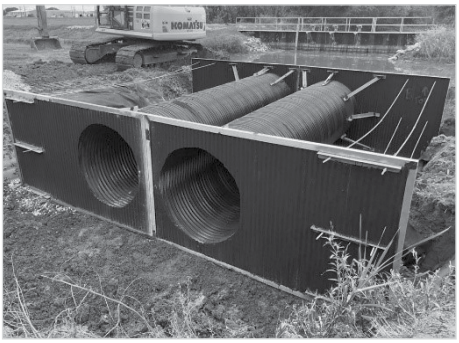



Step bevel has both a bottom and top step with 2:1 slope..

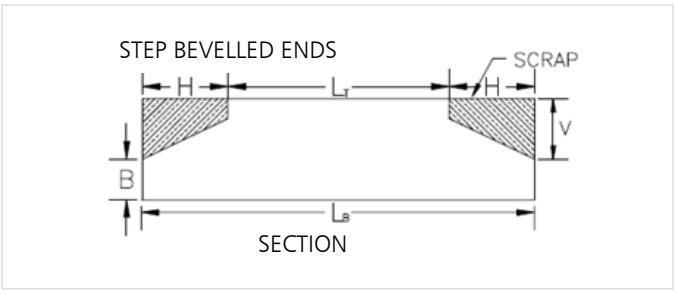



Partial bevel has only a bottom step with 2:1 slope.

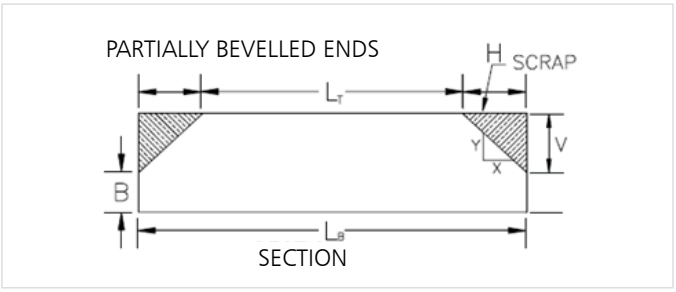

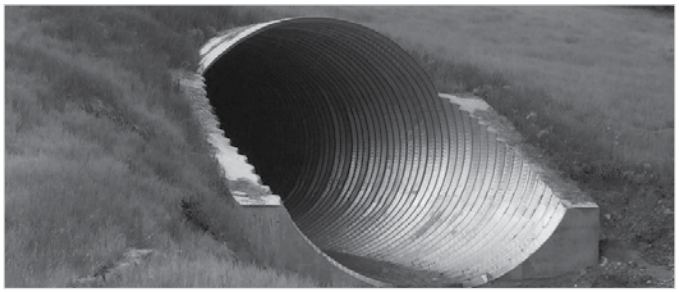

Concrete slope collars and cut off wall may be required on the bevel depending on size of the pipe, skew angle, and length of the bevel.

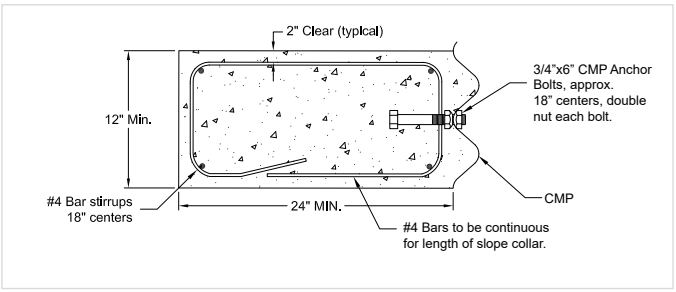

Additional Considerations

Because most systems are constructed below-grade, rainfall can rapidly fill the excavation; potentially causing floatation and movement of the previously placed pipes. To help mitigate potential problems, it is best to start the installation at the downstream end with the outlet already constructed to allow a route for the water to escape. Temporary diversion measures may be required for high flows due to the restricted nature of the outlet pipe.

Skewed Ends to Embankment

Corrugated metal pipe utilized for roadway crossings is many times skewed to the roadway embankment. This may lead to unbalanced soil loading conditions. It is important to properly balance (warp) embankment fill for both single and multiple barrel pipe installations. Additional embankment fill may need to be imported to balance the load over each side of the pipe system. Refer to ASTM A798 for additional information.

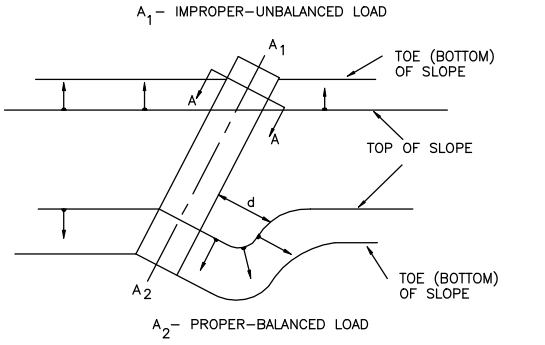

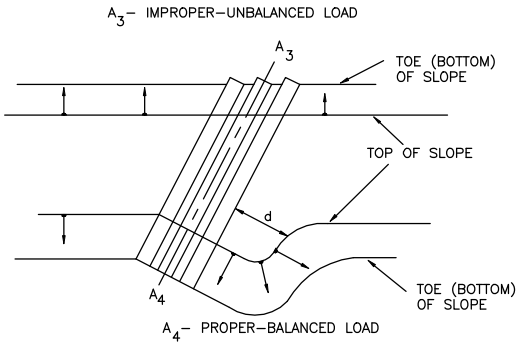

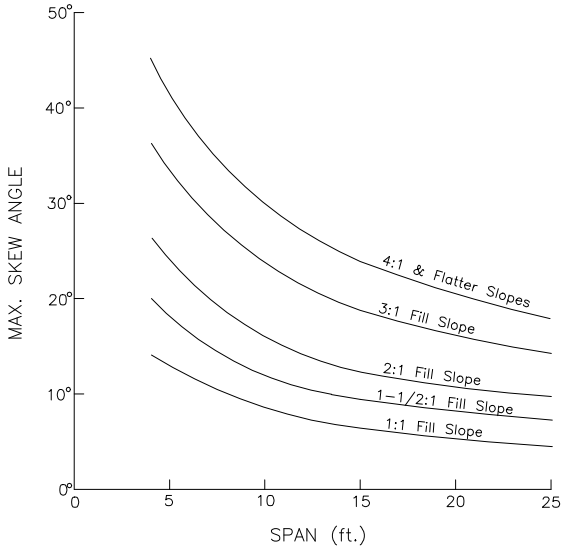

Industry References

For additional information, please reference the following sources:

- ASTM A798, Standard Practice for Installing Factory-Made Corrugated Steel Pipe for Sewers and Other Applications
- AASHTO Section 26, Standard Specifications for Highway Bridges-Division II, Section 26 LRFD Bridge Construction
- AREMA Manual for Railway Engineering, Section 4.12
- National Corrugated Steel Pipe Association, Installation Manual for Corrugated Steel Pipe and Structural Plate





CMP Preconstruction Checklist

Contech Field Contact and Phone: _____

Contech Plant Contact and Phone: _____

Contractor Contact and Phone: _____

Project Name: _____

Site Address: _____

Pre-con Attendees: _____

Topics to Review:

- ☐ Truck access and pipe storage availability/expectation
- ☐ Pipe unloading and handling safety, equipment and procedures
- ☐ System layout and shop drawing review
- ☐ Shipping schedule and installation sequence
- ☐ Joint configuration and assembly
- ☐ Connection with unlike storm sewer materials
- ☐ Backfill material selection and placement strategy
- ☐ Backfill sequence, lift thickness and balanced loading
- ☐ Compaction requirement (90%) and equipment
- ☐ Additional cover requirements for heavy construction loads
- ☐ CMP riser concrete cap installation

Notes: _____

_____

_____

_____

NOTHING IN THIS CATALOG SHOULD BE CONSTRUED AS A WARRANTY. APPLICATIONS SUGGESTED HEREIN ARE DESCRIBED ONLY TO HELP READERS MAKE THEIR OWN EVALUATIONS AND DECISIONS, AND ARE NEITHER GUARANTEES NOR WARRANTIES OF SUITABILITY FOR ANY APPLICATION. CONTECH MAKES NO WARRANTY WHATSOEVER, EXPRESS OR IMPLIED, RELATED TO THE APPLICATIONS, MATERIALS, COATINGS, OR PRODUCTS DISCUSSED HEREIN. ALL IMPLIED WARRANTIES OF MERCHANTABILITY AND ALL IMPLIED WARRANTIES OF FITNESS FOR ANY PARTICULAR PURPOSE ARE DISCLAIMED BY CONTECH. SEE CONTECH'S CONDITIONS OF SALE (AVAILABLE AT WWW.CONTECHES.COM/COS) FOR MORE INFORMATION.

CONTECH ENGINEERED SOLUTIONS

© 2023 Contech Engineered Solutions LLC, a QUIKRETE Company

800-338-1122 | www.ContechES.com

SPL-1, SEEDING AND MULCHING

1.0 DESCRIPTION

The work covered by this special provision includes preparing seedbeds; soil testing; furnishing and incorporating fertilizer and lime, covering seed; furnishing, placing, and securing mulch and other operations necessary for the temporary and permanent establishment of grass on disturbed areas. Unless otherwise stated in this special provision, all work shall be in accordance with the City of Charlotte Landscape Construction Standards (CLCS) Section 02100 SOIL and Section 04200 SEEDING AND SODDING OF TURFGRASS.

2.0 MATERIALS

Unless specified otherwise in this special provision and/or as directed by the City, all materials covered in this section shall be in accordance with the requirements of CLCS Section 04200.

a. Grass Seed:
Grass seed shall be in accordance with CLCS Section 04200 Part 02.C, except that for Water Quality Enhancement projects, Kentucky-31 or approved equal, shall be utilized on dam embankments and at other locations adjacent to the water's edge, as indicated on the plans.

b. Fertilizer:
Fertilizer shall be in accordance with CLCS Section 04200 Part 02.B

c. Protective Organic Mulch:
Protective organic mulch shall be in accordance with CLCS Section 04200 Part 02.E.

3.0 METHOD

All work covered in this special provision shall be in accordance with the requirements of the CLCS Section 04200, unless specified otherwise in this special provision and/or as directed by the City.

a. Soil Testing:
Soil Testing shall be in accordance with special provision Topsoil and CLCS Section 04200 Part 03.A.1, except that "a reputable soil testing lab" shall mean "a laboratory that is a participant in the Soil Science Society of America's (SSSA) North American Proficiency Testing (NAPT) program and is listed on the SSSA website as a NAPT participant".

b. Preparation of Seed Bed:
Preparation of seed bed shall be in accordance with CLCS Section 04200 Part 03.A.2, except that "6-inch depth" shall be replaced with "3-inch depth" in the following statement, "Prior to seeding operations, all proposed lawn areas shall be scarified/tilled to 6" depth and prepared until the surface is smooth, friable and of a uniformly fine texture."

c. Seeding:
Seeding shall be in accordance with CLCS Section 04200 Part 03.A.3, except that for Water Quality Enhancement projects, where seed is to be applied on dam embankments and at other locations adjacent to the water's edge, as indicated on the plans, the term "Turf-type Fescue" shall be replaced with "Kentucky-31".

Additionally, in CLCS Section 04200 Part 03.A.3. the statement "Turf-type fescue may be seeded year-round; however, any variance in the above seeding schedule or the use of temporary seeding will require at least one over-seeding application from August 25th to October 31 to ensure 90% coverage." shall be

supplemented with “The use of temporary seeding will require that permanent seeding be placed between August 25th and October 31st. Permanent seeding shall include all necessary seed bed preparation, fertilizing, watering, etc. as required by CLCS Section 04200 and this special provision to ensure 90% coverage of the required permanent vegetation at four (4) weeks from date of placement of seed.”

4.0 MAINTENANCE / ESTABLISHMENT

Maintenance / establishment of new grass shall be in accordance with Section 04200 Part 03.C, except that “Watering Seeded Areas” is specifically excepted from Part 03.C.1, and replaced with:

> “Sufficient watering shall be provided to assure a ninety percent (90%) coverage of a healthy stand of the required vegetation not more than four (4) weeks from date of seed placement.
>
> If ninety percent (90%) coverage is not achieved by the end of the fourth week, the Contractor shall, at the direction of the Engineer, again prepare the seed bed and place seed, mulch, etc. per the requirements of this special provision, at no additional cost to the City. The Contractor will be required to repeat this process at no additional cost to the City until ninety percent (90%) coverage of the required vegetation has been realized not more than four weeks from date of placement of seed.”

Immediately following planting of seed, the area shall be mulched at a rate of two (2) to three (3) tons per acre. If necessary, mulching materials shall be kept in place with a mulch-anchoring device or with a non-asphaltic tackifier.

5.0 SUBMITTAL

(Section Not Used)

6.0 MEASUREMENT AND PAYMENT

The quantity of seeding and mulching to be measured will be the actual number of square yards of seeding and mulching, measured along the surface of the ground, which has been completed and accepted.

The quantity of seeding and mulching to be paid for will be the actual number of square yards of seeding and mulching which has been completed and accepted. Such payment shall be full compensation for all work covered in this special provision, including soil testing, maintenance, seedbed preparation, furnishing and applying seed, lime, fertilizer, mulch, tackifier, and soil additives .

Payment will be made under:

SEEDING AND MULCHING ..... SY

SP-1, Pump Around Operation
Version Date: 8/3/2021 Revision Date: XX/XX/XXXX by XXX

1.0 DESCRIPTION

Pump around operation includes all work necessary for the installation and maintenance of the pump around operation. This specification is required for *continuous natural stream base flow* sustained between precipitation events, which is defined as base flow herein. Work shall be performed in the dry by pumping base flow around project work area(s) for sediment and erosion control purposes as may be necessary or directed by the Engineer and to conform to the plans, specifications, details, permits, local laws, state laws, federal laws, and the Charlotte Land Development Standards where applicable.

The pump around operation shall provide a passageway for the base flow around the storm drainage work area(s). This pump around operation is for storm drainage work only and should not be considered for use with other construction activity such as sanitary sewer bypass pumping. Storm drainage work may include but is not limited to, removal and/or installation of pipe culvert, box culvert, bottomless pipe arch or culvert; stream channel improvement; or stream channel restoration. Contractor is responsible to maintain all active storm drainage systems and/or overland conveyance, including during rain events.

2.0 METHODS AND MATERIALS

Pump around operation methods, measures, materials, and works shall include, but are not limited to, the following:

Pump Around Operation System:

Pump Around Pump – A silent or quiet-rated (70db at 25 feet) pump(s), located *upstream* of an Impervious Dike shall be used to convey the base flow around the working area(s) during storm drainage work. The pump shall be contained inside a cased pump well, and filter stone shall surround the casing to prevent the intake of sediment fines. The intake for the drain mechanism should be located near the top of the water column unless otherwise specified by the Engineer. The pump system shall include temporary flexible hose in sufficient length to pump the water from the upstream end of the working area(s) to the downstream end at the Temporary Stabilized Outlet.

Dewatering System:

Dewatering Pump – A silent or quiet-rated (70db at 25 feet) pump(s) located *within* the limits of the working area shall be used to dewater the working area of any groundwater or infiltration in order to perform storm drainage work in the dry. The pump(s) include temporary flexible hose in sufficient length to pump and dewater from the working area to the Special Stilling Basin.

Temporary Stabilized Outlet - Shall be used in accordance with the plans and detail to control the effluent from all pump around operation measures, unless native streambed stone material is deemed suitable by designer at discharge location.

Storm water conveyance - Contractor is responsible for safely conveying storm water runoff resulting from precipitation events at all times including when installing storm drainage work in an existing or new alignment. During periods of dormant stream work and/or storm drainage culvert activity, Contractor shall provide temporary tie-ins, diversion ditches, or other means and methods to safely convey base flow and storm water runoff from precipitation events.

Restoration – Contractor shall restore working area to existing conditions or as required by the plans and permits. This shall include but not limited to removing, disposing, hauling, and restoring area where pump around and dewatering pumps were installed, temporary stabilized outlets, temporary flexible hose, and all other incidentals impacted by the pump around operation.

3.0 SUBMITTALS

Prior to starting pump around operations, Contractor shall submit all necessary specifications of pumps and associated materials to be used for the pump around and dewatering portions of work for review and approval by the Engineer. This shall include, but not limited to, an overall plan indicating specific locations of pumps, intakes and discharges, impervious dikes, and special stilling basins; size, quantity, noise specifications of pumps - pump well casing detail, temporary stabilized outlet material, flexible hose size and material; and surface runoff from rain event plan showing locations of temporary tie-in and/or diversion ditches needed to control storm flow during rain events. Contractor will be required to continuously maintain the systems and protect the working area(s) and surrounding structures subject to flooding.

4.0 MEASUREMENT

Measurement will be made as described below:

The Pump Around Operation specified under this Section shall be measured at the contract unit price per day. No separate measurement of materials will be made under this item. The Dewatering System is incidental and will not be measured under the Pump Around Operation.

Any pumping required that totals four (4) hours or more in a single calendar day will constitute a day of pumping and will be paid for at the contract unit price. Pumping for less than four (4) hours in a single calendar day will be considered incidental to the cost of the work. No additional payment will be made.

Impervious Dikes will not be measured under this section but will be measured in accordance with the *Impervious Dike* Special Provision.

Special Stilling Basins will not be measured under this section but will be measured in accordance with the *Special Stilling Basin* Special Provision.

5.0 PAYMENT

The payment will be made at the contract unit price per day for “Pump Around Operation.” Such payment will be full compensation for all elements of work required in accordance with the special provision including, but not limited to, furnishing all labor, materials, equipment, supplies, supervision, tools; performing all work necessary for the installation, maintenance, and removal of pump equipment in conjunction with storm drainage work, stream restoration/stabilization construction, culvert installation; furnishing project submittals; and other incidentals necessary to complete all work referenced herein. Payment shall only be made on calendar days the Contractor is actively progressing with storm drainage work which necessitates the pump around operation. Pump around operation used by the Contractor while not actively progressing with storm drainage work shall be at their own expense.

The Dewatering System is incidental to the Pump Around Operation and no separate payments will be made.

Impervious Dikes shall be paid separately in accordance with *Impervious Dike* Special Provision.

Special Stilling Basin shall be paid separately in accordance with S*pecial Stilling Basins* Special Provision.

Payment will be made under:

PUMP AROUND OPERATION ..... DY

CONTRACT
Between
MECKLENBURG COUNTY
and
TBD

for

CONSTRUCTION SERVICES
for
TBD

DATE TBD

Prepared by: Mecklenburg County Storm Water Services

SAMPLE

STATE OF NORTH CAROLINA)
) CONSTRUCTION CONTRACT
COUNTY OF MECKLENBURG)

THIS CONSTRUCTION CONTRACT, hereinafter sometimes "Contract" made this, __ day of _____ 2026, by and between **Mecklenburg County**, a political subdivision of the State of North Carolina and herein after called "Owner" and _____**,** with offices at _____, North Carolina _____, hereinafter called "Contractor".

W I T N E S E T H:

This Contract represents the entire and integrated Contract between the parties hereto and supersedes all prior negotiations, whether written or oral. That for and in consideration of the covenants set forth herein, the parties hereto mutually promise and agree as follows:

1. **STATEMENT OF WORK:** The Contractor shall furnish all supervision, labor, materials, tools, equipment, and perform and complete all work in an efficient and workmanlike manner, and in accordance to the Contract Documents dated TBD, as prepared by TBD, including all addenda and per the acceptance of the proposal from the Contractor dated TBD for TBD.

66" CMP Replacement Base Bid	
Construction Contingency Allowance	
Total Contract Amount	

TOTAL CONTRACT AMOUNT: TBD

2. **CONTRACT TIME:** The Contract Time as defined shall begin on the date specified on a written Notice to Proceed from the Consultant to the Contractor. This date is to be no more than approximately TBD days after the acceptance of the Proposal of the Contractor by the Owner. The work is to be diligently prosecuted to completion within TBD calendar days after the date to start work as indicated in the "Notice to Proceed". It is further agreed that the Owner shall have the right at its discretion to extend the time for completion of the Work.

3. **CONTRACT MODIFICATION:** The Owner may require the Contractor to furnish materials and to do additional Work not provided in this Contract, but which may be found necessary to the proper protection and completion of the work embraced in this Contract. See the section in the General Conditions of the Project Manual entitled "Extra Work".

4. **LIQUIDATED DAMAGES:** The Contractor hereby further agrees that the Owner shall be and is hereby authorized to deduct and retain out of the monies which may be due or become due to the Contractor under this Contract, as damages for the non-completion of the Work within the Contract Time herein stipulated for completion in accordance with the provisions of this Contract. Liquidated Damages shall be fixed or allowed for such performance and completion in the amount of TBD dollars per day. Liquidated Damages is an estimate of expenses the Owner will suffer by reason of such default and is not by way of a penalty.

5. **CONTRACT PAYMENTS:** Partial payments will be made once a month. The County shall retain retainage as indicated in Section III Article I 1.7 Periodic Payments.

6. **FAILURE TO TIMELY COMPLETE CLOSE-OUT DOCUMENTATION:**
If the County has not received 100% of the close-out documentation, as required in Section 4 Supplementary Conditions Article 1, 1.8 -Final Completion and Final Payment, within

TBD calendar days after Substantial Completion, the Contractor shall forfeit any and all claims to any funds due the Contractor under this contract.

In addition, if the County has not received 100% of the close-out documentation, as required in Section 4 Supplementary Conditions Article 1, 1.8 -Final Completion and Final Payment, within one hundred and twenty (120) calendar days after Substantial Completion, the County reserves the right to deem the Contractor to be not-a-responsible contractor for future projects. If the Contractor deemed to be not-a-responsible contractor is the lowest bidder on any future bids, the County may elect to award the Contract to another contractor, i.e., the lowest responsible bidder, taking into consideration quality, performance, and the time specified in the bids for performance, thus recognizing that the low bidding Contractor has been deemed to be not-a-responsible contractor or bidder.

Exceptions:

1. The final Change Order has not been executed by the County. The Contractor shall have one hundred and twenty (120) calendar days after receiving the final executed change order to provide the County close out documentation before being considered to be not-a-responsible contractor.
2. The County has requested the Contractor keep his contract open in anticipation of future work on the project.
3. The Contractor's failure to provide the missing close-out documentation is not caused by the Contractor, but is caused by a third party's failure to provide necessary information to the Contractor.

7. CHANGES IN WORK; CLAIMS: No claim for an adjustment in Contract Price or Contract Times will be valid if not submitted in accordance with this Paragraph.

Notice: **Written notice stating the general nature of each claim shall be delivered by the claimant to the other party to the Contract promptly, but in no event later than thirty (30) days after the start of the event giving rise to the claim**.

The responsibility to substantiate a claim shall rest with the party making the claim. The amount or extent of the claim, with supporting data, shall be delivered to the other party to the Contract within fifteen (15) days after the initial Notice of the Claim. Each claim shall be accompanied by claimant's written statement that the adjustment claimed is the entire adjustment to which the claimant believes it is entitled as a result of said event. The opposing party shall submit any response to the claimant within thirty (30) days after receipt of the claimant's last submittal.

The parties agree to make a good faith effort to resolve the claim or dispute prior to the time it must be submitted to the Consultant or to mediation as set forth in paragraph 8 below.

8. DISPUTE RESOLUTION: Claims and Disputes arising under this Contract shall be subject to one of the following dispute resolution processes:

A. Claims and Disputes Not Subject to Mediation

The following claims and disputes, if validly submitted as provided in Paragraph 7, are not

subject to mediation, and are to be decided by the Consultant without mediation:

A. A claim or dispute seeking a non-monetary recovery; and
B. A claim or dispute seeking a monetary recovery of $15,000 or less; and
C. A claim or dispute seeking the extension of any time limit shall be subject to mediation pursuant to the Contract Mediation Provisions only if the damages which would be suffered by the Party seeking the extension would exceed $15,000. To the extent that liquidated damages are set forth in the Contract Documents and is the measurement of damages for failure by such Party(s) to meet the time limit, the liquidated damages shall be the exclusive standard for determining the amount of damages associated with such dispute.

CLAIMS NOT SUBJECT TO MEDIATION MUST BE SUBMITTED TO THE CONSULTANT FOR DECISION WITHIN SIXTY (60) DAYS AFTER THE START OF THE EVENT GIVING RISE TO THE CLAIM OR DISPUTE.

B. <u>Claims and Disputes Subject to Mediation</u>

Any other claim or dispute arising between or among the Parties listed herein that arises from the Project, including without limitation a breach of such Contract, shall be subject to non-binding mediation administered by the American Arbitration Association under its Construction Industry Mediation Rules, or to such other mediation process to which the parties may agree, except as otherwise expressly set forth in these Contract Mediation Provisions. To the extent any provision of the Construction Industry Mediation Rules is inconsistent with the provisions of these Contract Mediation Provisions, the provisions of the Contract Mediation Provisions shall control.

The Owner and any Party contracting with the Owner or with any first-tier or lower-tier subcontractor for the Project hereby agree to participate in good faith in any mediation of a claim or dispute subject to these Contract Mediation Provisions, including without limitation the following Parties: Consultant(s), architect(s), engineer(s), surveyor(s), prime contractor(s), surety(ies), subcontractor(s), and supplier(s).

The Contractor, and all other Parties, shall include these Contract Mediation Provisions in every agreement to which they are a Party for the Project, without variation or exception. Failure to do so will constitute a breach of the Construction Contract, and the Contractor or other Party failing to include these Contract Mediation Provisions in any agreement shall indemnify and hold harmless the remaining Parties from and against any and all claims, including without limitation reasonable attorney fees and other costs of litigation arising in any manner from such breach.

For purposes of these Contract Mediation Provisions, a claim or dispute is limited to the recovery of monetary damages from the same transaction or occurrence against a single Party or two or more Parties alleged to be jointly liable. Two or more claims or disputes may not be consolidated without the consent of all Parties to such disputes.

A request for mediation shall include the amount of the monetary relief requested.

A request for mediation must be made within ninety (90) days after giving notice of the claim or dispute as required by Paragraph 7 above.
Prior to requesting mediation, a Party must believe that it is entitled under applicable law to recover the monetary amount to be included in the request from one or more of the remaining Parties. Such belief must be based on a reasonable and prudent investigation into the claim or

dispute. The request for mediation must be based on such investigation and may not include any amount or the name of any remaining Party(s), unless supported by such investigation by the Party requesting the mediation.

If a Party does not perform a reasonable and prudent investigation, it shall indemnify and hold harmless all other Parties from any costs, including reasonable attorney fees and other costs of mediation, litigation, and damages incurred by such other Parties.

All expenses incurred by a Party in preparing and presenting any claim or defense, shall be paid by the Party preparing for mediation. Such expenses shall include, without limitation, any associated cost for witnesses, exhibits, and attorney fees. All other expenses, including filing fees and required traveling expenses by the mediator, and other expenses of the mediator, shall be borne as follows: (1) One half by the Party requesting the mediation, with the remaining parties paying equal shares of the remaining expenses and costs. (2) If the Owner is named as a party to the mediation, the Owner shall pay at least one-third of the mediation expenses and 2/3 of the expenses shall be divided among the remaining Parties. (3) If more than one Party to dispute requests mediation, the mediation expenses and costs to be divided among the Parties shall be borne equally by the Parties to the dispute; however, if the Owner is named as one of the parties to the mediation, the Owner shall pay at least one-third of the mediation expenses.

The mediation shall be held at a location agreeable to the mediator and all of the Parties. If no agreement can be reached, the mediation will be held at a location in Mecklenburg County as the mediator shall determine.

The provision of these Contract Mediation Provisions is subject to any other provisions of the Construction Contract concerning the submission, documentation and/or proof of any claim(s) or dispute(s).

C. <u>Claims and Disputes Submitted to the Consultant</u>

For purposes of this Contract, the "Consultant" shall be <u>TBD</u>.

Claims should be submitted to the Consultant at the following address:

TBD

_____

Initials of Contractor

FINAL RESOLUTION OF DISPUTES: ANY VALIDLY SUBMITTED CLAIM OR DISPUTE UNRESOLVED AFTER SUCH MEDIATION, OR THAT DOES NOT REQUIRE MEDIATION, SHALL BE SUBMITTED TO THE CONSULTANT FOR FINAL RESOLUTION IN ACCORDANCE WITH THE FOLLOWING PROVISIONS:

CLAIMS NOT SUBJECT TO MEDIATION MUST BE SUBMITTED TO THE CONSULTANT FOR DECISION WITHIN SIXTY (60) DAYS AFTER THE START OF THE EVENT GIVING RISE TO THE CLAIM OR DISPUTE.

CLAIMS SUBJECT TO MEDIATION MUST BE SUBMITTED TO THE CONSULTANT WITHIN THIRTY (30) DAYS AFTER THE MEDIATION ENDS.

THE CONSULTANT WILL BE THE INTERPRETER OF THE REQUIREMENTS OF THIS CONTRACT AND THE JUDGE OF THE PERFORMANCE THEREUNDER BY THE OWNER AND CONTRACTOR.

IT IS AGREED BY AND BETWEEN THE PARTIES TO THIS CONTRACT THAT THE CONSULTANT SHALL RESOLVE ALL DISPUTES, INCLUDING, WITHOUT LIMITATION, DISPUTES INVOLVING (i) THE QUANTITY AND QUALITY OF THE SEVERAL KINDS OF WORK AND MATERIALS WHICH ARE TO BE PAID FOR UNDER THIS CONTRACT; (ii) THE APPORTIONMENT OF LIQUIDATED DAMAGES AMONG CONTRACTORS, INCLUDING THE CONTRACTOR; (iii) ALL QUESTIONS IN RELATION TO LINES, ELEVATIONS, AND DIMENSIONS OF THE WORK; AND (iv) THE PROPER INTERPRETATION OF THE PLANS AND SPECIFICATIONS.

IN MAKING ITS DECISION IN THESE MATTERS, THE CONSULTANT SHALL REQUIRE SUCH INFORMATION AND EVIDENCE, AS THE CONSULTANT, IN ITS SOLE DISCRETION, SHALL DEEM NECESSARY TO FULLY AND FAIRLY CONSIDER THE MATTER AND TO ALLOW IT TO RENDER A FULL, FAIR, AND IMPARTIAL DETERMINATION OF THE CLAIM OR DISPUTE SUBMITTED TO IT.

***Consultant's Action**:* Consultant will review each claim or dispute and, within thirty (30) days after receipt of the last submittal of the claimant or the last submittal of the opposing party, if any, take one of the following actions in writing:

1. deny the claim in whole or in part; or
2. approve the claim in whole or in part.

THE CONSULTANT'S DECISIONS UPON THESE CLAIMS AND DISPUTES SHALL BE FINAL AND BINDING UPON THE OWNER AND THE CONTRACTOR.

9. DOCUMENTS INCORPORATED BY REFERENCE: It is agreed and understood that the Bid Package, including without limitation, any Addendum to the Bid Package, the Notice to Bidders, Instructions to Bidders, the General Conditions, the MWBE Provisions, Supplementary Conditions, all information in the Project Manual including the Technical Specifications, the Contractor's Itemized Proposal, and all other specifications and drawings referenced therein (herein "Contract Documents") are part of this Contract and are incorporated herein in full.

10. MISCELLANEOUS PROVISIONS: The Contractor hereby agrees that he has read each and every clause of this Contract, including all Contract Documents, and fully understands the

meaning of the same, and that he accepts each provision and will comply with all its terms. This Contract is to be executed with one (1) copy to be delivered to the Contractor and one (1) to be retained by the Owner. Each Contract shall contain an original Performance Bond and a copy of the Certificate of Insurance.

The Performance and Payment Bond shall be addressed to:
Mecklenburg County Storm Water Services
2145 Suttle Avenue
Charlotte, NC 28208
Attn: Heather S Davis

The Certificate of Liability Insurance shall be addressed to:
Mecklenburg County Storm Water Services
2145 Suttle Avenue
Charlotte, NC 28208
Attn: Heather S Davis

11. GOVERNING LAW AND JURISDICTION: The parties acknowledge that the Contract is made and entered into in Charlotte, North Carolina, and will be performed in Charlotte and Mecklenburg County, North Carolina. The parties further acknowledge and agree that North Carolina law shall govern all the rights, obligations, duties and liabilities of the parties under the Contract, and that North Carolina law shall govern in the interpretation and enforcement of the Contract and any other matters relating to the Contract (all without regard to North Carolina conflicts of law principles).

The parties further agree that any and all legal actions of proceedings relating to the Contract shall be brought in a state of federal court sitting in Mecklenburg County, North Carolina. By execution of the Contract, the parties submit to the jurisdiction of said courts and hereby irrevocably waive any and all objections, which they may have with respect to venue in any court sitting in Mecklenburg County, North Carolina.

12. INDEMNIFICATION: To the fullest extent permitted by law, the Contractor shall indemnify and hold harmless each of the "Indemnitees" (as defined below) from and against any and all "charges" (as defined below) paid or incurred by any of them as a result of any claims, demands, lawsuits, actions or proceedings either: (i) alleging violation, misappropriation, or infringement of any copyright, trademark, patent, trade secret or other proprietary rights with respect to the Work, or any products or deliverables provided to the County pursuant to this Contract ("infringement claims"); (ii) seeking payment for labor or materials purchased or supplied by the Contractor or its subcontractors in connection with this Contract; or (iii) arising from the Contractor's failure to perform its obligations under this Contract, or from any act of negligence or willful misconduct by the Contractor or any of its agents, employees or subcontractors relating to this Contract, including but not limited to any liability caused by an accident or other occurrence resulting in bodily injury, death, sickness, or disease to any person(s) or damage or destruction to any property, real or personal, tangible or intangible: or (iv) arising from a violation of any federal, state or local law, regulation or ordinance by the Contractor or any of its subcontractors, including without limitation, E-Verify (Article 2 of Chapter 64 of the North Carolina General Statutes) or other immigration laws; (v) arising from any claim that the Contractor or an employee or subcontractor of the Contractor is an employee of, including but not limited to claims relating to Workers' Compensation, failure to withhold taxes and the like. For purposes of

this section : (a) the term “Indemnitees” means the County and each of the County’s officers, officials, employees, agents and independent contractors, excluding the Contractor; and (b) the term “charges” means any and all losses, damages, costs, expenses (including reasonable attorneys’ fees), obligations, duties, fines, penalties, royalties, interest charges and other liabilities including settlement amounts.

13. **COMPLIANCE PROVISION:** The Contractor agrees to make itself aware of and comply with, and cause its subcontractors to comply with, all federal, state, and local laws, regulations and ordinances relating to the performance of this Contract, or to the products and services delivered hereunder, including without limitation, **E-Verify (Article 2 of Chapter 64 of the North Carolina General Statutes)**, Workers’ Compensation, the Fair Labor Standards Act (FLSA), the Americans with Disabilities Act (ADA), the Family and Medical Leave Act (FMLA) and Occupational Safety And Health Administration (OSHA). The Contractor further agrees to obtain all verifications, permits and licenses applicable to the performance of this Contract. If any violation of this section has occurred or does occur, the Contractor will indemnify and save harmless the County from all losses, damages, costs, expenses (including reasonable attorneys’ fees), obligations, duties, fines, penalties, interest charges and other liabilities (including settlement amounts) incurred on account of such violation.

14. **IRAN DIVESTMENT ACT CERTIFICATION:** Contractor certifies that as of the date of this agreement, contractor is not currently listed on the Final Divestment List created and maintained by the North Carolina State Treasurer pursuant to G.S.143-6A-4. Further, pursuant to G.S. 143C-6A-5(b), Contractor agrees not to sub-contract with any person or entity to perform any part of the contract terms herein, if, at the time, the sub-contractor's name appears on the then-current version of the Divestment Act List. Contractor further agrees to notify the County Procurement Department if at any time during the term of this agreement, it is added to the "List." The Divestment List may be found on the State Treasurer's website at www.nctreasurer.com/Iran.

In WITNESS WHEREOF, the parties have duly executed this Contract as of the date first above written.

CONTRACTOR:

Contractor Signature

ATTEST:

for the Contractor

Corporate Seal

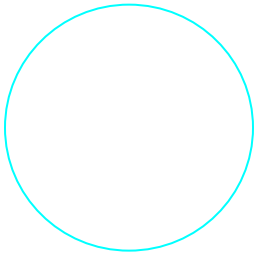

MECKLENBURG COUNTY AUTHORIZED OFFICER SIGNATURES FOLLOW ON NEXT PAGE

Mecklenburg County

Signature Page

Contract Number: To be completed by County Finance Department
Amendment Number: To be completed by County Finance Department
Contractor Name: To be completed by County Finance Department

MECKLENBURG COUNTY:

Assistant County Manager

This instrument has been pre-audited in the manner required by the Local Government Budget and Fiscal Control Act.

Finance Director

ATTEST:

Clerk to the Board of County Commissioners

APPROVED AS TO FORM:

County Attorney

APPROVED AS TO INSURANCE REQUIREMENTS:

Charlotte-Mecklenburg Division of Insurance Risk Management