BUGGY BUILDING ROOF REPLACEMENT

115 CHATHAM STREET
SANFORD, NC 27330

REI PROJECT NO. R25RAL-051
LEE COUNTY BID NO. 4263-01-27

DATE: SEPTEMBER 28, 2026

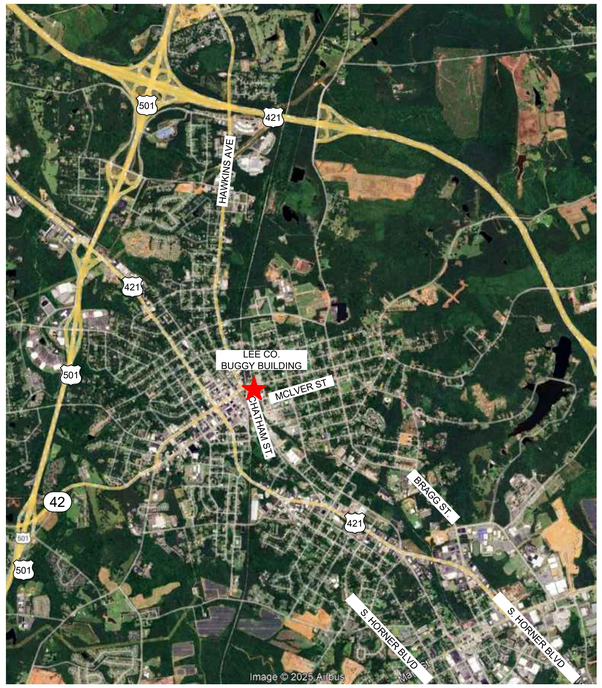

1 VICINITY MAP
SCALE: N.T.S.

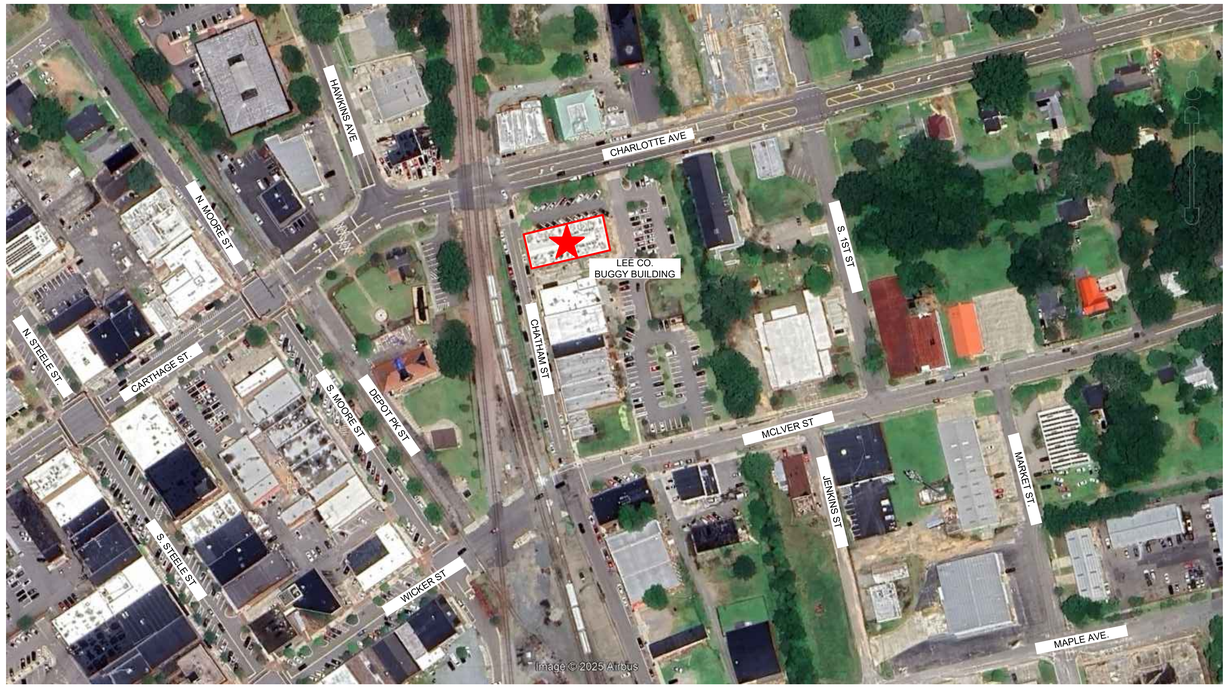

PLAN NORTH

2 SITE PLAN
SCALE: N.T.S.

GENERAL NOTES:
1. THESE DOCUMENTS ARE THE PROPERTY OF REI ENGINEERS, INC. (REI) AND REI RETAINS ALL RIGHTS THEREIN, INCLUDING COPYRIGHTS. IT MAY ONLY BE USED IN A MANNER CONSISTENT WITH REI'S RIGHTS WHILE REI IS PROVIDING SERVICE FOR THE SPECIFIC PROJECT IDENTIFIED OR REFERRED TO HEREIN OR EXTENSIONS THERETO. IT MAY NOT BE USED FOR ANY OTHER PURPOSE EXCEPT WITH THE EXPRESS WRITTEN AGREEMENT OF, AND COMPENSATION TO, REI ENGINEERS, INC.
2. DIMENSIONS, DETAIL COMPONENTS AND EQUIPMENT PENETRATION LOCATIONS ARE FOR INFORMATION ONLY. CONTRACTOR IS RESPONSIBLE TO FIELD VERIFY ALL INFORMATION PROVIDED.
3. ONLY ONE DETAIL INDICATOR MAY BE SHOWN FOR EACH TYPE OF ROOF PENETRATION. ALL OTHER SIMILAR PENETRATIONS ARE TO BE FLASHED AS REQUIRED BY THE TYPICAL DETAIL INDICATOR, UNLESS OTHERWISE NOTED.
4. NOTES ARE INTENDED TO PROVIDE TYPICAL LOCATIONS OF WORK. IT IS THE CONTRACTORS RESPONSIBILITY TO QUANTIFY ALL LOCATIONS.

DETAIL NOTES
1. LIGHT LINES REPRESENT EXISTING CONSTRUCTION TO REMAIN AND DARK LINES REPRESENT NEW COMPONENTS TO BE PROVIDED.

ELEVATION NOTES
1. ELEVATIONS ARE PROVIDED FOR REFERENCE. ACTUAL CONDITIONS MAY VARY ON EACH BUILDING ELEVATION. CONTRACTOR SHALL FIELD VERIFY CONDITIONS PRESENT ON EACH ELEVATION.

ABBREVIATION LIST:

AB	ABANDONED
ALUM.	ALUMINUM
BLDG.	BUILDING
CJ	CONTROL JOINT
DS	DOWNSPOUT
EJ	EXPANSION JOINT
EPDM	ETHYLENE PROPYLENE DIENE MONOMER
EX.	EXISTING
GALV.	GALVANIZE
GA.	GAUGE
HT	HEIGHT
MAX.	MAXIMUM
MIN.	MINIMUM
N.I.C	NOT IN CONTRACT
NOM.	NOMINAL
N.T.S.	NOT TO SCALE
O.C.	ON CENTER
OF	OVERFLOW
PS	PRESSURE SENSITIVE
PVC	POLYVINYL CHLORIDE
RPLC.	REPLACEMENT
SF	SQUARE FEET
S.S.	STAINLESS STEEL
SIM.	SIMILAR
TERM.	TERMINATE/TERMINATION
TYP.	TYPICAL

DRAWING INDEX:

G-001	COVER
G-002	BUILDING CODE SUMMARY
XR101	ROOF PLAN
XR301	ROOF SYSTEMS
XR501	DETAILS
XR502	DETAILS
XR503	DETAILS
XR504	DETAILS

BUILDING CODE REFERENCE:
2018 NCSBC: BUILDING CODE
2018 NCSBC: ENERGY CONSERVATION CODE
2018 NCSBC: EXISTING BUILDING CODE
2018 NCSBC: FIRE PREVENTION CODE
2018 NCSBC: FUEL GAS CODE
2018 NCSBC: MECHANICAL CODE
2018 NCSBC: PLUMBING CODE

REI ENGINEERS
Engineering solutions for tomorrow®
9121 Anson Way | Suite 100
Raleigh, NC 27615
NORTH CAROLINA ENGINEERING FIRM LICENSE # C-1520
www.reiengineers.com

SEALS:

NORTH CAROLINA PROFESSIONAL SEAL 060855 ENGINEER MARK A. IAKOVENKO
10/14/25

PROJECT NAME:

LEE COUNTY GOVT NORTH CAROLINA

BUGGY BUILDING ROOF REPLACEMENT

115 CHATHAM STREET
SANFORD, NC 27330

PROJECT NO:
REI PROJECT # R25RAL-051
LEE COUNTY BID # 4263-01-27

ISSUE:

NO.	DATE	DESCRIPTION
CD	09-28-26	CONTRACT DOCUMENTS

THIS LINE IS 1 INCH ON THE ORIGINAL DRAWING

IF IT IS NOT 1 INCH ON THIS PAGE, SCALE DRAWING ACCORDINGLY.

SHEET TITLE

COVER

DRAWING

G-001

2018 APPENDIX B
BUILDING CODE SUMMARY
FOR COMMERCIAL ROOF REPLACEMENT PROJECTS
(EXCEPT 1 AND 2 FAMILY DWELLINGS AND TOWNHOUSES)

Name of Project: Lee County Buggy Building Roof Replacement
Address: 115 Chatham Street, Sanford, NC 27330
Owner/ Authorized Agent: Ryan Faulk Phone #: (919 718-4622)
Email: rfaulk@leecountync.gov
Owned By: ☒ City/County ☐ Private ☐ State
Code Enforcement Jurisdiction: ☐ City ☒ County Lee ☐ State

ENGINEER:

FIRM	NAME	LICENSE #	PHONE #	EMAIL
REI Engineers	Mark Iakovenko	060855	919-845-1450	miakovenko@reiengineers.com

2018 NORTH CAROLINA CODE FOR:
☒ Roof Replacement ☐ Roof Recover ☐ Roof Repair

2018 NORTH CAROLINA EXISTING BUILDING CODE
CHAPTER 5 CLASSIFICATION OF WORK:
☒ Section 503: Alteration – Level 1 (Renovation) ☐ Section 504: Alteration – Level 2 (Alteration) ☐ Section 505: Alteration – Level 3 (Reconstruction)

BASIC BUILDING DATA
Constructed Date: 1904 **Construction Type:** (check all that apply) ☐ I-A ☐ I-B ☐ II-A ☐ II-B ☐ III-A ☒ III-B ☐ IV ☐ V-A ☐ V-B

Sprinklers: ☐ No ☐ Partial ☒ Yes: ☐ NFPA 13 ☐ NFPA 13R ☐ NFPA 13D
Standpipes: ☒ No ☐ Yes: Class: ☐ 1 ☐ 2 ☐ 3 ☐ Wet ☐ Dry
Fire District: ☒ No ☐ Yes (Primary)

Building Height: 34 feet **Roof Area:** 8,369 square feet **Number of Stories:** 4
Allowable Height: 75 feet **Allowable Area:** 57,000 square feet **Allowable Stories:** 4

OCCUPANCY
Assembly: ☐ A-1 ☐ A-2 ☐ A-3 ☐ A-4 ☐ A-5
Business: ☒ B
Educational: ☐ E
Factory: ☐ F-1 (Moderate) ☐ F-2 (Low Hazard)
High Hazard: ☐ H-1 (Detonate) ☐ H-2 (Deflagrate) ☐ H-3 (Combust) ☐ H-4 (Health) ☐ H-5 (HPM)
Institutional: ☐ I-1 Condition 1 ☐ I-1 Condition 2 ☐ I-2 ☐ I-3 ☐ I-4
Mercantile: ☐ M
Residential: ☐ R-1 ☐ R-2 ☐ R-3 ☐ R-4
Storage: ☐ S-1 (Moderate) ☐ S-2 (Low Hazard)
Utility: ☐ U

FIRE PROTECTION REQUIREMENTS

BUILDING ELEMENT	FIRE PROTECTION RATING REQUIRED	FIRE PROTECTION RATING PROVIDED	DESIGN # FOR RATED ASSEMBLY	COMMENTS
Roof Construction All Sectors	N/A	N/A	N/A	Type III-B Construction

STRUCTURAL SUMMARY

Components & Cladding Wind Uplift Resistance: (ASCE 7-10)
Basic Wind Speed 120 mph Risk Category II
Internal Pressure Coeff. 0.18 Exposure Category B

Wind Uplift Nominal Design Pressures:
Zone 1 (Field) -19.4 psf Zone 4 (Field) -19.2 psf
Zone 2 (Perimeter) -32.6 psf Zone 5 (Perimeter) -23.7 psf
Zone 3 (Corner) -49.0 psf Positive Zone 4 and 5 17.8 psf

Roof System Dead Load	Sector A	Sector B	Sector C
Existing System:	3.19 psf	3.22 psf	3.22 psf
Replacement System:	4.62 psf	3.57 psf	4.22 psf

ENERGY SUMMARY

Roof Assembly Description: Refer to Specification Section 01 11 00 Summary of Work
Code Compliance: 2018 NCEBC
Min. Required R-value: Not less than existing

	Sector A	Sector B	Sector C
Existing R-Value:	R-24.69	R-18.49	R-18.49
R-Value of Insulation (min):	R-48.79	R-23.99	R-20.07
Number of Skylights:	0	0	0
u-Value of each Skylight:	0	0	0
Total Sq. Ft. of Skylights	0	0	0

1 BUILDING CODE SUMMARY
SCALE: N.T.S.

REI ENGINEERS
Engineering solutions for tomorrow®
9121 Anson Way | Suite 100
Raleigh, NC 27615
NORTH CAROLINA ENGINEERING FIRM LICENSE # C-1520
www.reiengineers.com

SEALS:

NORTH CAROLINA PROFESSIONAL SEAL 060855 ENGINEER MARK A. IAKOVENKO 10/14/25

PROJECT NAME:

LEE COUNTY GOVT NORTH CAROLINA LCG

BUGGY BUILDING ROOF REPLACEMENT

115 CHATHAM STREET
SANFORD, NC 27330

PROJECT NO:
REI PROJECT # R25RAL-051
LEE COUNTY BID # 4263-01-27

ISSUE:

NO.	DATE	DESCRIPTION
CD	09-28-26	CONTRACT DOCUMENTS

THIS LINE IS 1 INCH ON THE ORIGINAL DRAWING
IF IT IS NOT 1 INCH ON THIS PAGE, SCALE DRAWING ACCORDINGLY.

SHEET TITLE

BUILDING CODE SUMMARY

DRAWING

G-002

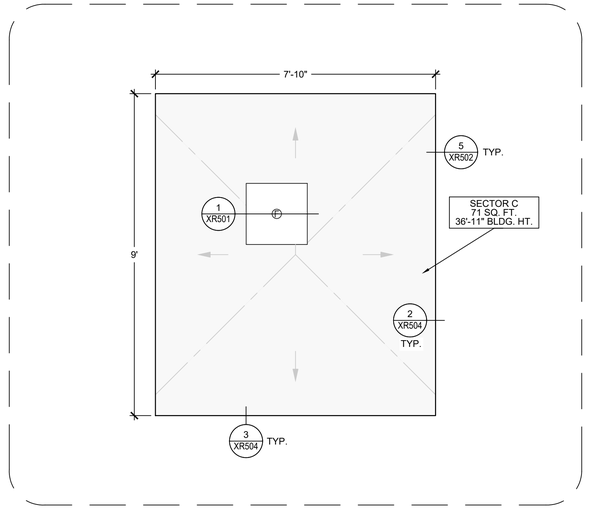

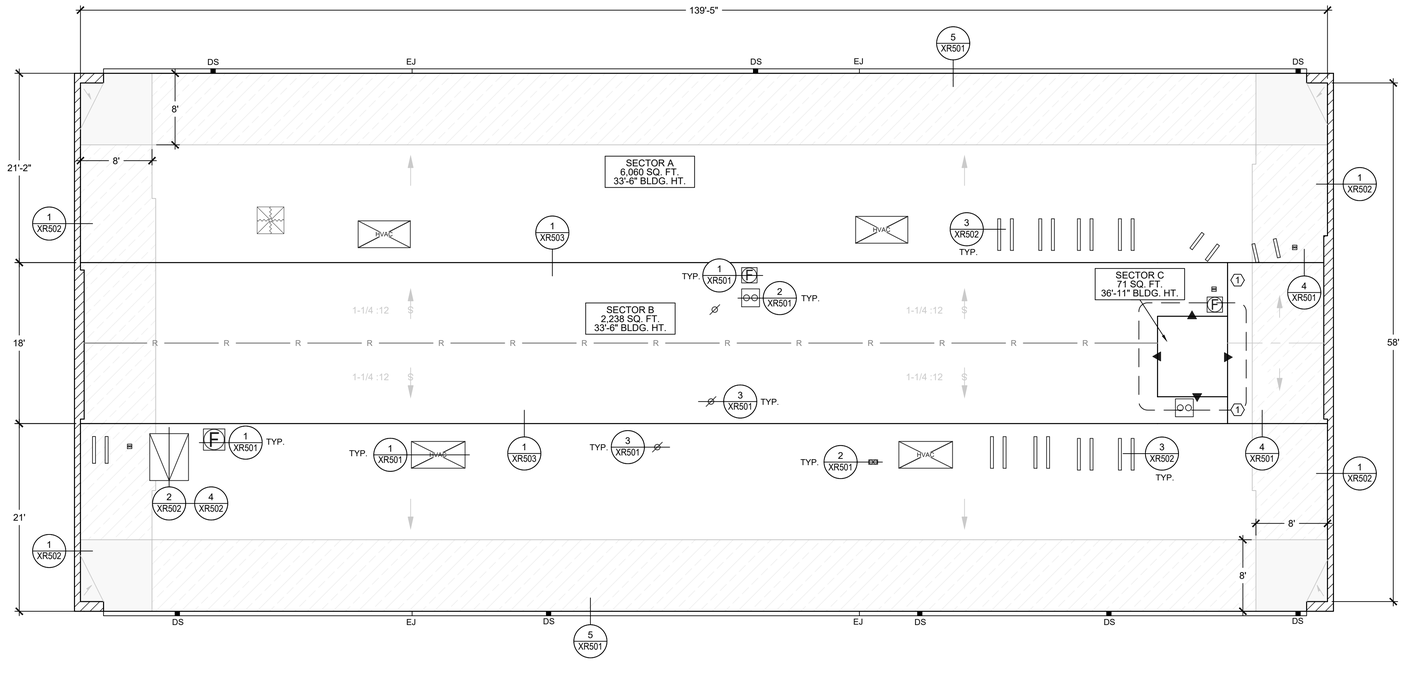

1 ROOF PLAN

SCALE: 1/8" = 1'-0"

PLAN NORTH

1/8" = 1'-0"

8 0 8 16

WIND ZONES

- ZONE 1 (FIELD)
- ZONE 2 (PERIMETER)
- ZONE 3 (CORNER)

GENERAL NOTES:

1. THESE DOCUMENTS ARE THE PROPERTY OF REI ENGINEERS, INC. (REI) AND REI RETAINS ALL RIGHTS THEREIN, INCLUDING COPYRIGHTS. IT MAY ONLY BE USED IN A MANNER CONSISTENT WITH REI'S RIGHTS WHILE REI IS PROVIDING SERVICE FOR THE SPECIFIC PROJECT IDENTIFIED OR REFERRED TO HEREIN OR EXTENSIONS THERETO. IT MAY NOT BE USED FOR ANY OTHER PURPOSE EXCEPT WITH THE EXPRESS WRITTEN AGREEMENT OF, AND COMPENSATION TO, REI ENGINEERS, INC.
2. DIMENSIONS, DETAIL COMPONENTS AND EQUIPMENT PENETRATION LOCATIONS ARE FOR INFORMATION ONLY. CONTRACTOR IS RESPONSIBLE TO FIELD VERIFY ALL INFORMATION PROVIDED.
3. ONLY ONE DETAIL INDICATOR MAY BE SHOWN FOR EACH TYPE OF ROOF PENETRATION. ALL OTHER SIMILAR PENETRATIONS ARE TO BE FLASHED AS REQUIRED BY THE TYPICAL DETAIL INDICATOR, UNLESS OTHERWISE NOTED.
4. NOTES ARE INTENDED TO PROVIDE TYPICAL LOCATIONS OF WORK. IT IS THE CONTRACTORS RESPONSIBILITY TO QUANTIFY ALL LOCATIONS.

SHEET NOTES:

1. PROVIDE DIVIDER WALL OR TAPERED EDGE STRIP AS NECESSARY TO PROVIDE SMOOTH TRANSITION.

KEY

- ROOF EDGE
- PARAPET WALL
- GUTTER EDGE
- RIDGE
- TAPERED INSULATION
- STRUCTURAL SLOPE
- TAPERED INSULATION SLOPE
- SOIL PIPE
- HVAC UNIT
- MULTIPLE PIPE PENETRATION
- EXHAUST FAN
- ROOF HATCH
- EQUIPMENT SUPPORT CURB
- ANTENNA
- ELEVATION CHANGE
- NOTE NO.
- ROOF AREA INDICATOR
- DETAIL INDICATOR

REI ENGINEERS

Engineering solutions for tomorrow®

9121 Anson Way | Suite 100
Raleigh, NC 27615

NORTH CAROLINA
ENGINEERING FIRM
LICENSE # C-1520

www.reiengineers.com

SEALS:

NORTH CAROLINA PROFESSIONAL SEAL 060855 ENGINEER MARK A. JAKOVENKO 10/19/25

PROJECT NAME:

LEE COUNTY GOVT NORTH CAROLINA

BUGGY BUILDING ROOF REPLACEMENT

115 CHATHAM STREET
SANFORD, NC 27330

PROJECT NO:

REI PROJECT # R25RAL-051
LEE COUNTY BID # 4263-01-27

ISSUE:

NO.	DATE	DESCRIPTION
CD	09-28-26	CONTRACT DOCUMENTS

THIS LINE IS 1 INCH ON THE ORIGINAL DRAWING

IF IT IS NOT 1 INCH ON THIS PAGE, SCALE DRAWING ACCORDINGLY.

SHEET TITLE

ROOF PLAN

DRAWING

XR101

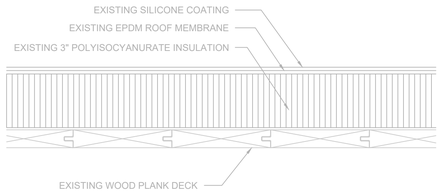

NOTES:
1. EXISTING ROOF SYSTEM COMPOSITION SHOWN IS BASED UPON RANDOM SAMPLING AT TEST CUT LOCATIONS.
2. CONTRACTOR IS RESPONSIBLE TO FIELD VERIFY INFORMATION PROVIDED.
3. REMOVE COMPONENTS DOWN TO THE EXISTING WOOD PLANK DECK, WHICH IS TO REMAIN.

1 EXISTING SYSTEM - SECTOR A

SCALE: 3" = 1'-0"

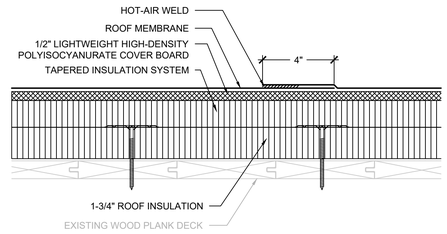

NOTES:
1. ROOF SYSTEM SHALL BE A TESTED ASSEMBLY IN ACCORDANCE WITH FM 4474, UL 580 OR UL 1897 TO RESIST THE WIND UPLIFT PRESSURES SPECIFIED ON SHEET G-002 OF THE CONTRACT DOCUMENTS. PROVIDE SUBMITTAL INCLUDING DOCUMENTATION OF TESTED ASSEMBLY ALONG WITH ATTACHMENT REQUIREMENTS FOR THE ASSEMBLY.
2. ANY WHOLE OR PARTIAL INSULATION BOARD OR PORTION OF ANY BOARD WHICH FALLS IN THE PERIMETERS & CORNERS OUTLINED SHALL BE SUBJECT TO THE FASTENING REQUIREMENTS FOR THE HIGHEST WIND ZONE ENCOUNTERED, ACROSS THE ENTIRE BOARD.
3. CONTRACTOR TO PAINT SCREWS TO MATCH ROOF DECK.

2 REPLACEMENT SYSTEM - SECTOR A

SCALE: 3" = 1'-0"

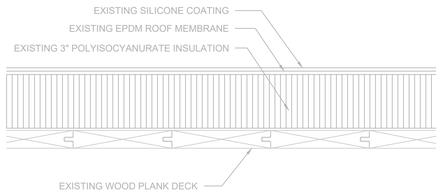

NOTES:
1. EXISTING ROOF SYSTEM COMPOSITION SHOWN IS BASED UPON RANDOM SAMPLING AT TEST CUT LOCATIONS.
2. CONTRACTOR IS RESPONSIBLE TO FIELD VERIFY INFORMATION PROVIDED.
3. REMOVE COMPONENTS DOWN TO THE EXISTING WOOD PLANK DECK, WHICH IS TO REMAIN.

3 EXISTING SYSTEM - SECTOR B

SCALE: 3" = 1'-0"

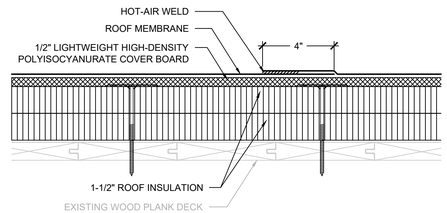

NOTES:
1. ROOF SYSTEM SHALL BE A TESTED ASSEMBLY IN ACCORDANCE WITH FM 4474, UL 580 OR UL 1897 TO RESIST THE WIND UPLIFT PRESSURES SPECIFIED ON SHEET G-002 OF THE CONTRACT DOCUMENTS. PROVIDE SUBMITTAL INCLUDING DOCUMENTATION OF TESTED ASSEMBLY ALONG WITH ATTACHMENT REQUIREMENTS FOR THE ASSEMBLY.
2. ANY WHOLE OR PARTIAL INSULATION BOARD OR PORTION OF ANY BOARD WHICH FALLS IN THE PERIMETERS & CORNERS OUTLINED SHALL BE SUBJECT TO THE FASTENING REQUIREMENTS FOR THE HIGHEST WIND ZONE ENCOUNTERED, ACROSS THE ENTIRE BOARD.
3. CONTRACTOR TO PAINT SCREWS TO MATCH ROOF DECK.

4 REPLACEMENT SYSTEM - SECTOR B

SCALE: 3" = 1'-0"

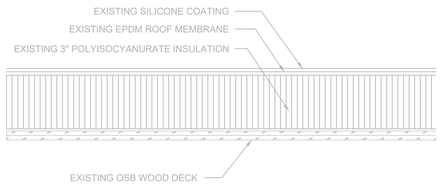

NOTES:
1. EXISTING ROOF SYSTEM COMPOSITION SHOWN IS BASED UPON RANDOM SAMPLING AT TEST CUT LOCATIONS.
2. CONTRACTOR IS RESPONSIBLE TO FIELD VERIFY INFORMATION PROVIDED.
3. REMOVE COMPONENTS DOWN TO THE EXISTING WOOD PLANK DECK, WHICH IS TO REMAIN.

5 EXISTING SYSTEM - SECTOR C

SCALE: 3" = 1'-0"

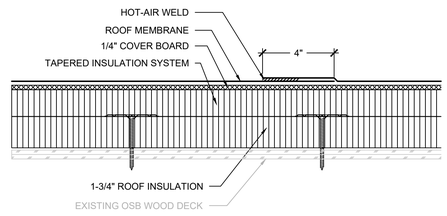

NOTES:
1. ROOF SYSTEM SHALL BE A TESTED ASSEMBLY IN ACCORDANCE WITH FM 4474, UL 580 OR UL 1897 TO RESIST THE WIND UPLIFT PRESSURES SPECIFIED ON SHEET G-002 OF THE CONTRACT DOCUMENTS. PROVIDE SUBMITTAL INCLUDING DOCUMENTATION OF TESTED ASSEMBLY ALONG WITH ATTACHMENT REQUIREMENTS FOR THE ASSEMBLY.
2. ANY WHOLE OR PARTIAL INSULATION BOARD OR PORTION OF ANY BOARD WHICH FALLS IN THE PERIMETERS & CORNERS OUTLINED SHALL BE SUBJECT TO THE FASTENING REQUIREMENTS FOR THE HIGHEST WIND ZONE ENCOUNTERED, ACROSS THE ENTIRE BOARD.
3. CONTRACTOR TO PAINT SCREWS TO MATCH ROOF DECK.

6 REPLACEMENT SYSTEM - SECTOR C

SCALE: 3" = 1'-0"

GENERAL NOTES:
1. THESE DOCUMENTS ARE THE PROPERTY OF REI ENGINEERS, INC. (REI) AND REI RETAINS ALL RIGHTS THEREIN, INCLUDING COPYRIGHTS. IT MAY ONLY BE USED IN A MANNER CONSISTENT WITH REI'S RIGHTS WHILE REI IS PROVIDING SERVICE FOR THE SPECIFIC PROJECT IDENTIFIED OR REFERRED TO HEREIN OR EXTENSIONS THERETO. IT MAY NOT BE USED FOR ANY OTHER PURPOSE EXCEPT WITH THE EXPRESS WRITTEN AGREEMENT OF, AND COMPENSATION TO, REI ENGINEERS, INC.
2. DIMENSIONS, DETAIL COMPONENTS AND EQUIPMENT PENETRATION LOCATIONS ARE FOR INFORMATION ONLY. CONTRACTOR IS RESPONSIBLE TO FIELD VERIFY ALL INFORMATION PROVIDED.

SHEET NOTES:
1. FOR DETAILS, LIGHT LINES REPRESENT EXISTING CONSTRUCTION TO REMAIN AND DARK LINES REPRESENT NEW COMPONENTS TO BE PROVIDED.
2. ANY WHOLE OR PARTIAL INSULATION BOARD OR PORTION OF ANY BOARD WHICH FALLS IN THE PERIMETERS & CORNERS OUTLINED SHALL BE SUBJECT TO THE FASTENING REQUIREMENTS FOR THE HIGHEST WIND ZONE ENCOUNTERED, ACROSS THE ENTIRE BOARD.

REI ENGINEERS
Engineering solutions for tomorrow®
9121 Anson Way | Suite 100
Raleigh, NC 27615
NORTH CAROLINA ENGINEERING FIRM LICENSE # C-1520
www.reiengineers.com

SEALS:

NORTH CAROLINA PROFESSIONAL SEAL 060855 ENGINEER MARK A. JAKOVENKO 10/19/25

PROJECT NAME:

LEE COUNTY GOVT NORTH CAROLINA

BUGGY BUILDING ROOF REPLACEMENT

115 CHATHAM STREET
SANFORD, NC 27330

PROJECT NO:
REI PROJECT # R25RAL-051
LEE COUNTY BID # 4263-01-27

ISSUE:

NO.	DATE	DESCRIPTION
CD	09-28-26	CONTRACT DOCUMENTS

THIS LINE IS 1 INCH ON THE ORIGINAL DRAWING

IF IT IS NOT 1 INCH ON THIS PAGE, SCALE DRAWING ACCORDINGLY.

SHEET TITLE

ROOF SYSTEMS

DRAWING

XR301

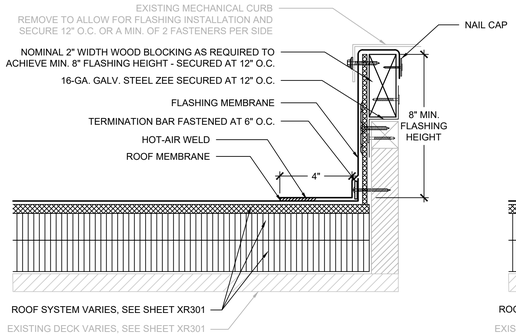

CURB WITH RAISED EXTENSION

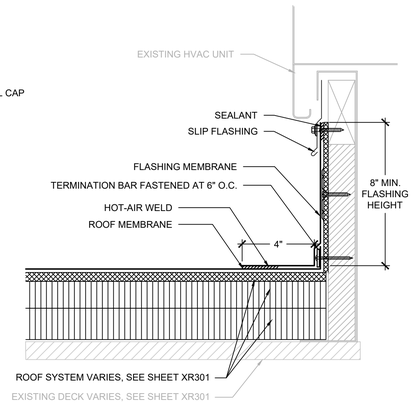

CURB WITH SLIP FLASHING

NOTES:
1. PROPERLY DISCONNECT UNIT TO RAISE AND ALLOW FLASHING INSTALLATION THEN PROPERLY REINSTALL AND CONNECT.
2. EXTEND CURB HEIGHT AND/OR PROVIDE WOOD NAILERS TO PROVIDE MINIMUM 8" FLASHING HEIGHT.

1 MECHANICAL CURB

SCALE: 3" = 1'-0"

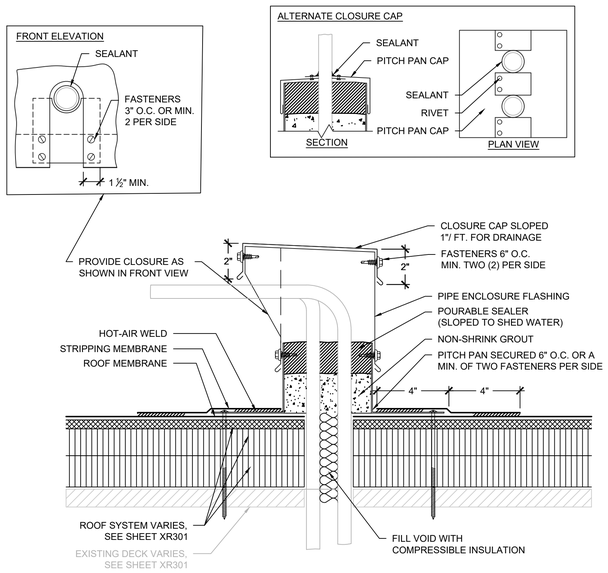

NOTES:
1. WHERE PIPES CAN BE SEPARATED WITH 2" MIN. CLEARANCE, PROVIDE FLUID APPLIED FLASHING IN LIEU OF MULTIPLE PIPE PENETRATION FLASHING. UTILIZE RIGID INSULATION B/W PIPES TO MAINTAIN SEPARATION.
2. WHERE PIPES ARE VERTICAL, PROVIDE ALTERNATE CLOSURE CAP.

2 MULTIPLE PIPE PENETRATION

SCALE: 3" = 1'-0"

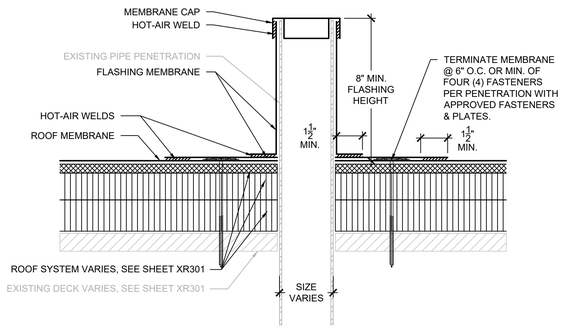

FIELD-WRAPPED

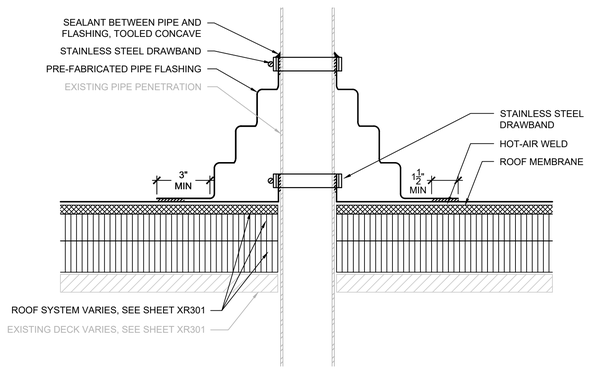

PRE-FABRICATED

NOTES:
1. EXTEND PIPE PENETRATION TO PROVIDE MINIMUM 8" FLASHING HEIGHT.

3 PIPE PENETRATION

SCALE: 3" = 1'-0"

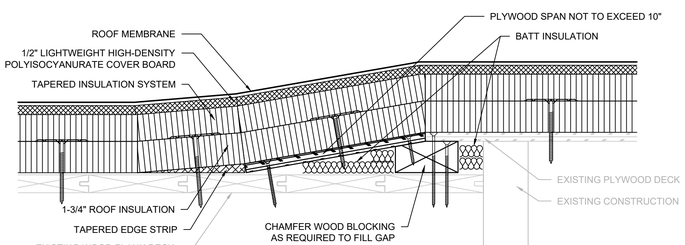

4 WOOD PLANK TO PLYWOOD TRANSITION

SCALE: 3" = 1'-0"

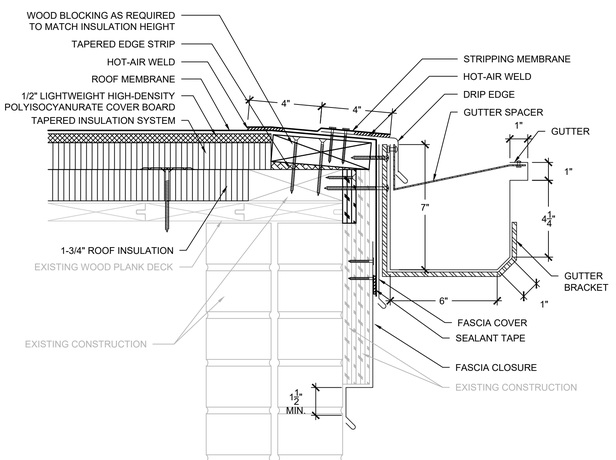

NOTES:
1. CONTRACTOR SHALL FIELD VERIFY EXISTING ROOF EDGE CONSTRUCTION AND COMPONENTS PRIOR TO SHEET METAL FABRICATION AND TO CONFIRM DETAIL AS SHOWN WILL PROVIDE POSITIVE DRAINAGE WITHOUT PONDING WATER. NOTIFY ENGINEER OF ANY DISCREPANCIES PRIOR TO INSTALLATION.

5 GUTTER EDGE

SCALE: 3" = 1'-0"

GENERAL NOTES:
1. THESE DOCUMENTS ARE THE PROPERTY OF REI ENGINEERS, INC. (REI) AND REI RETAINS ALL RIGHTS THEREIN, INCLUDING COPYRIGHTS. IT MAY ONLY BE USED IN A MANNER CONSISTENT WITH REI'S RIGHTS WHILE REI IS PROVIDING SERVICE FOR THE SPECIFIC PROJECT IDENTIFIED OR REFERRED TO HEREIN OR EXTENSIONS THERETO. IT MAY NOT BE USED FOR ANY OTHER PURPOSE EXCEPT WITH THE EXPRESS WRITTEN AGREEMENT OF, AND COMPENSATION TO, REI ENGINEERS, INC.
2. DIMENSIONS, DETAIL COMPONENTS AND EQUIPMENT PENETRATION LOCATIONS ARE FOR INFORMATION ONLY. CONTRACTOR IS RESPONSIBLE TO FIELD VERIFY ALL INFORMATION PROVIDED.

SHEET NOTES:
1. FOR DETAILS, LIGHT LINES REPRESENT EXISTING CONSTRUCTION TO REMAIN AND DARK LINES REPRESENT NEW COMPONENTS TO BE PROVIDED.
2. ANY WHOLE OR PARTIAL INSULATION BOARD OR PORTION OF ANY BOARD WHICH FALLS IN THE PERIMETERS & CORNERS OUTLINED SHALL BE SUBJECT TO THE FASTENING REQUIREMENTS FOR THE HIGHEST WIND ZONE ENCOUNTERED, ACROSS THE ENTIRE BOARD.

REI ENGINEERS
Engineering solutions for tomorrow®
9121 Anson Way | Suite 100
Raleigh, NC 27615
NORTH CAROLINA ENGINEERING FIRM LICENSE # C-1520
www.reiengineers.com

SEALS:

NORTH CAROLINA PROFESSIONAL SEAL 060855 10/19/25 ENGINEER MARK A. JANKOWSKI

PROJECT NAME:

LEE COUNTY GOVT NORTH CAROLINA

BUGGY BUILDING ROOF REPLACEMENT

115 CHATHAM STREET
SANFORD, NC 27330

PROJECT NO:
REI PROJECT # R25RAL-051
LEE COUNTY BID # 4263-01-27

ISSUE:

NO.	DATE	DESCRIPTION
CD	09-28-26	CONTRACT DOCUMENTS

THIS LINE IS 1 INCH ON THE ORIGINAL DRAWING

IF IT IS NOT 1 INCH ON THIS PAGE, SCALE DRAWING ACCORDINGLY.

SHEET TITLE

DETAILS

DRAWING

XR501

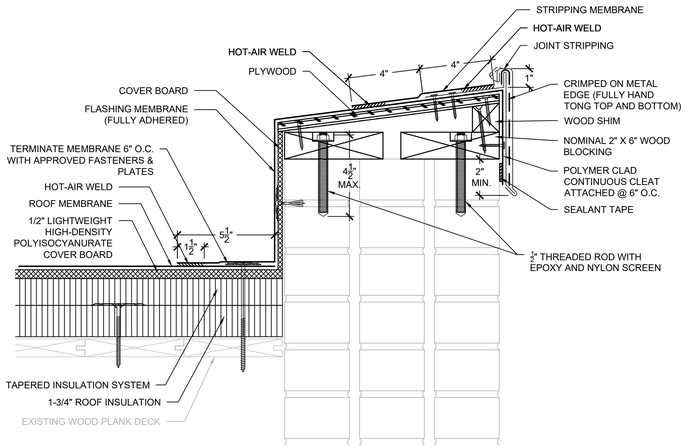

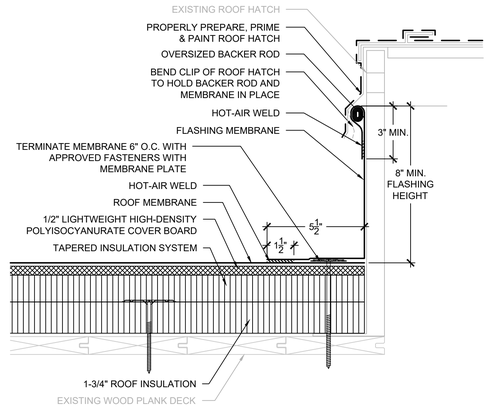

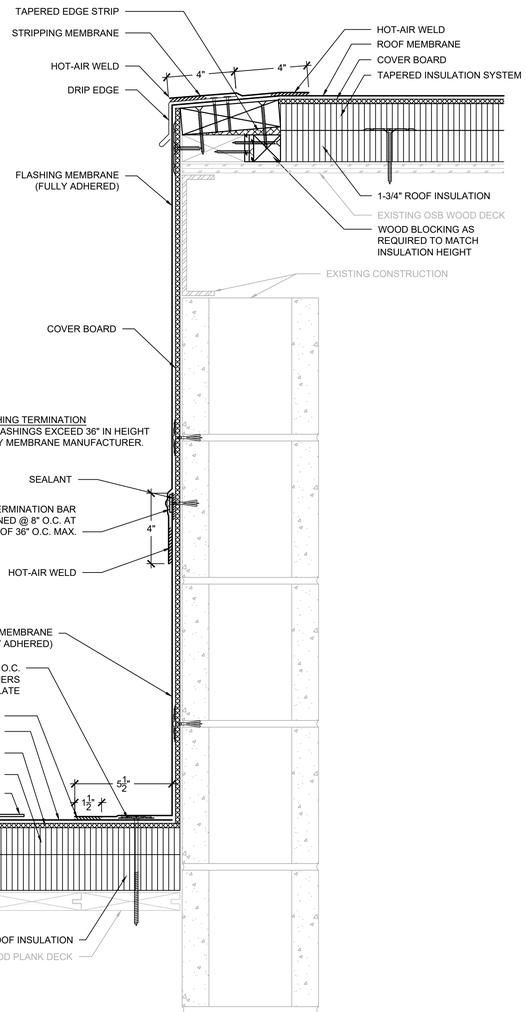

NOTES:
1. CONTRACTOR SHALL FIELD VERIFY EXISTING CONSTRUCTION AND COMPONENTS PRIOR TO SHEET METAL FABRICATION.
2. COPING SHALL BE TESTED FOR RESISTANCE TO WIND UPLIFT PRESSURES SPECIFIED IN ACCORDANCE WITH ANSI/SPRI ES-1 TEST METHOD RE-3. CONTRACTOR SHALL PROVIDE SHOP DRAWING DEPICTING SHEET METAL COMPONENTS WITH DIMENSIONS AND PROVIDE EVIDENCE OF TESTING TO RESIST THE SPECIFIED WIND UPLIFT PRESSURES.
3. PROVIDE SEPARATE FASCIA COVER EXTENSION WHERE EDGE METAL DIMENSIONS EXCEED ALLOWABLE TESTED ASSEMBLY REQUIREMENTS.

1 PARAPET WALL
SCALE: 3" = 1'-0"

2 ROOF HATCH
SCALE: 3" = 1'-0"

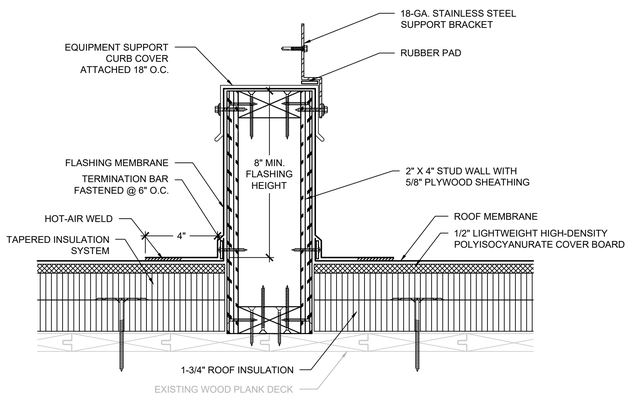

NOTES:
1. PROPERLY DISCONNECT EQUIPMENT/UNIT TO RAISE AND ALLOW FLASHING INSTALLATION THEN PROPERLY REINSTALL AND CONNECT. PROVIDE WOOD NAILERS TO PROVIDE MINIMUM 8" FLASHING HEIGHT.
2. PROVIDE MECHANICALLY ATTACHED BASE SHEET OVER COMBUSTIBLE OR NAILABLE SUBSTRATES PRIOR TO ADHERING BASE FLASHINGS.
3. PROVIDE RUBBER PROTECTION PAD ADHERED TO TOP OF CURB COVER WHERE EQUIPMENT BEARS ON EQUIPMENT SUPPORT CURB.
4. DO NOT SECURE EQUIPMENT THROUGH TOP OF CURB. UTILIZE SUPPORT BRACKET SECURED TO SIDE OF CURB.

3 EQUIPMENT SUPPORT CURB
SCALE: 3" = 1'-0"

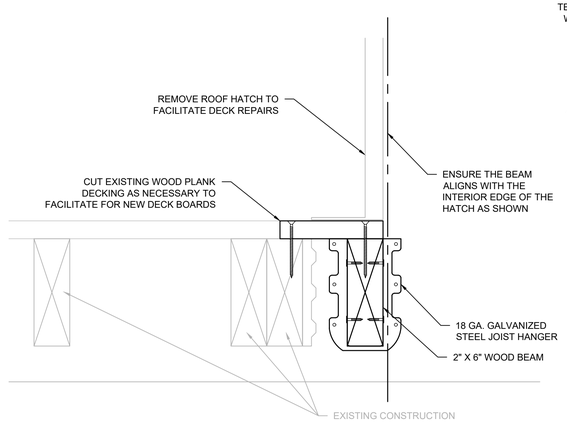

NOTES:
1. ROOF SYSTEM ABOVE DECK NOT SHOWN FOR CLARITY.
2. PROVIDE 2" X 6" SOUTHERN YELLOW PINE LUMBER.
3. PROVIDE 22-GAUGE G-90 GALVANIZED 2" X 6", U SHAPED FACE MOUNTED JOIST HANGER AS MANUFACTURED BY SIMPSON STRONG TIE OR ACCEPTED EQUIVALENT.
4. PROVIDE ATTACHMENT AS RECOMMENDED BY THE JOIST HANGER MANUFACTURER.

4 DECK REPAIR AT ROOF HATCH
SCALE: 3" = 1'-0"

NOTES:
1. CONTRACTOR SHALL FIELD VERIFY EXISTING ROOF EDGE CONSTRUCTION AND COMPONENTS PRIOR TO SHEET METAL FABRICATION.
2. EDGE METAL SHALL BE TESTED FOR RESISTANCE TO WIND UPLIFT PRESSURES SPECIFIED IN ACCORDANCE WITH ANSI/SPRI ES-1 TEST METHODS RE-1 AND RE-2. CONTRACTOR SHALL PROVIDE SHOP DRAWING DEPICTING SHEET METAL COMPONENTS WITH DIMENSIONS AND PROVIDE EVIDENCE OF TESTING TO RESIST THE SPECIFIED WIND UPLIFT PRESSURES.

5 ALTERNATE NO. 1: ELEVATION FROM SECTOR C TO LOWER ROOFS
SCALE: 3" = 1'-0"

GENERAL NOTES:
1. THESE DOCUMENTS ARE THE PROPERTY OF REI ENGINEERS, INC. (REI) AND REI RETAINS ALL RIGHTS THEREIN, INCLUDING COPYRIGHTS. IT MAY ONLY BE USED IN A MANNER CONSISTENT WITH REI'S RIGHTS WHILE REI IS PROVIDING SERVICE FOR THE SPECIFIC PROJECT IDENTIFIED OR REFERRED TO HEREIN OR EXTENSIONS THERETO. IT MAY NOT BE USED FOR ANY OTHER PURPOSE EXCEPT WITH THE EXPRESS WRITTEN AGREEMENT OF, AND COMPENSATION TO, REI ENGINEERS, INC.
2. DIMENSIONS, DETAIL COMPONENTS AND EQUIPMENT PENETRATION LOCATIONS ARE FOR INFORMATION ONLY. CONTRACTOR IS RESPONSIBLE TO FIELD VERIFY ALL INFORMATION PROVIDED.

SHEET NOTES:
1. FOR DETAILS, LIGHT LINES REPRESENT EXISTING CONSTRUCTION TO REMAIN AND DARK LINES REPRESENT NEW COMPONENTS TO BE PROVIDED.
2. ANY WHOLE OR PARTIAL INSULATION BOARD OR PORTION OF ANY BOARD WHICH FALLS IN THE PERIMETERS & CORNERS OUTLINED SHALL BE SUBJECT TO THE FASTENING REQUIREMENTS FOR THE HIGHEST WIND ZONE ENCOUNTERED, ACROSS THE ENTIRE BOARD.

REI ENGINEERS
Engineering solutions for tomorrow®
9121 Anson Way | Suite 100
Raleigh, NC 27615
NORTH CAROLINA ENGINEERING FIRM LICENSE # C-1520
www.reiengineers.com

SEALS:

NORTH CAROLINA PROFESSIONAL SEAL 060855 ENGINEER MARK A. JAKOVENKO 10/19/25

PROJECT NAME:

LEE COUNTY GOVT NORTH CAROLINA

BUGGY BUILDING ROOF REPLACEMENT

115 CHATHAM STREET
SANFORD, NC 27330

PROJECT NO:
REI PROJECT # R25RAL-051
LEE COUNTY BID # 4263-01-27

ISSUE:

NO.	DATE	DESCRIPTION
CD	09-28-26	CONTRACT DOCUMENTS

THIS LINE IS 1 INCH ON THE ORIGINAL DRAWING

IF IT IS NOT 1 INCH ON THIS PAGE, SCALE DRAWING ACCORDINGLY.

SHEET TITLE

DETAILS

DRAWING

XR502

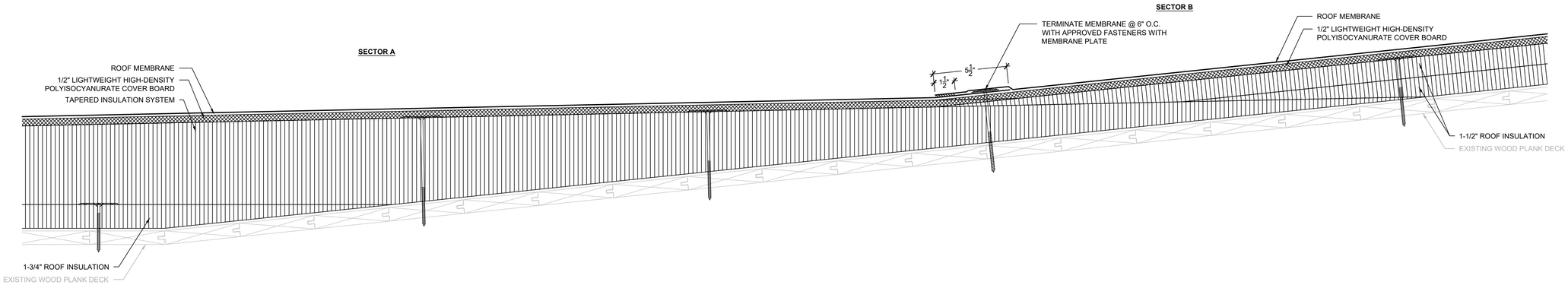

1 TRANSITION FROM SECTOR A TO SECTOR B

SCALE: 3" = 1'-0"

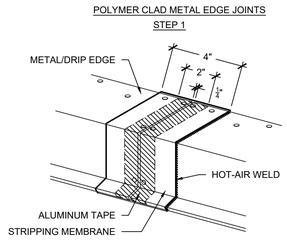

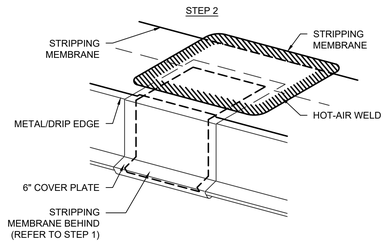

2 POLYMER CLAD DRIP EDGE AT GUTTER

SCALE: 3" = 1'-0"

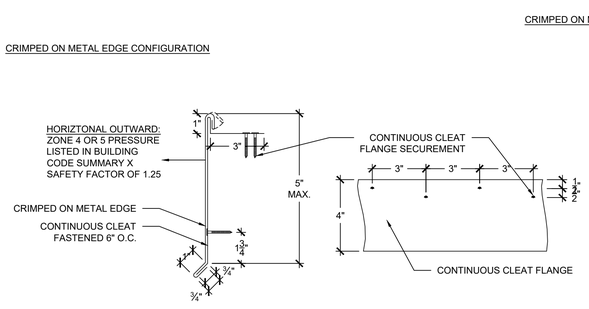

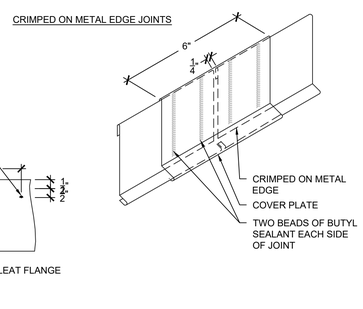

NOTES:
1. EDGE METAL SHALL BE TESTED FOR RESISTANCE TO WIND PRESSURES SPECIFIED IN WIND UPLIFT SUMMARY IN ACCORDANCE WITH ANSI/SPRI ES-1 TEST METHODS RE-1 AND RE-2.
2. CONTRACTOR SHALL PROVIDE SHOP DRAWING DEPICTING SHEET METAL COMPONENTS WITH DIMENSIONS AND PROVIDE EVIDENCE OF TESTING TO RESIST THE SPECIFIED WIND PRESSURES.
3. PROVIDE SEPARATE FASCIA COVER EXTENSION WHERE EDGE METAL DIMENSIONS EXCEED ALLOWABLE TESTED ASSEMBLY REQUIREMENTS.

3 CRIMPED ON METAL EDGE COMPONENTS

SCALE: 3" = 1'-0"

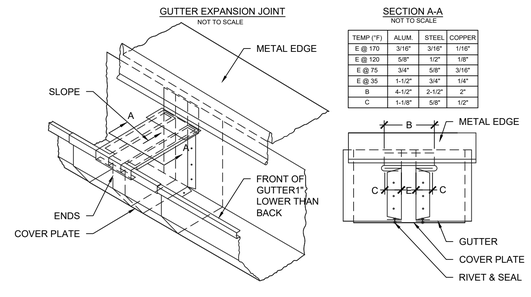

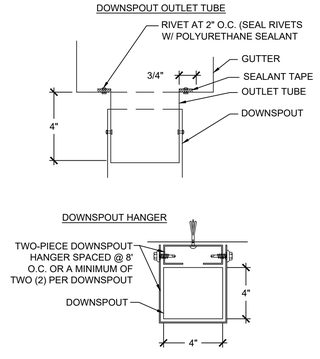

4 GUTTER/ DOWNSPOUT COMPONENTS

SCALE: 3" = 1'-0"

GENERAL NOTES:
1. THESE DOCUMENTS ARE THE PROPERTY OF REI ENGINEERS, INC. (REI) AND REI RETAINS ALL RIGHTS THEREIN, INCLUDING COPYRIGHTS. IT MAY ONLY BE USED IN A MANNER CONSISTENT WITH REI'S RIGHTS WHILE REI IS PROVIDING SERVICE FOR THE SPECIFIC PROJECT IDENTIFIED OR REFERRED TO HEREIN OR EXTENSIONS THERETO. IT MAY NOT BE USED FOR ANY OTHER PURPOSE EXCEPT WITH THE EXPRESS WRITTEN AGREEMENT OF, AND COMPENSATION TO, REI ENGINEERS, INC.
2. DIMENSIONS, DETAIL COMPONENTS AND EQUIPMENT PENETRATION LOCATIONS ARE FOR INFORMATION ONLY. CONTRACTOR IS RESPONSIBLE TO FIELD VERIFY ALL INFORMATION PROVIDED.

SHEET NOTES:
1. FOR DETAILS, LIGHT LINES REPRESENT EXISTING CONSTRUCTION TO REMAIN AND DARK LINES REPRESENT NEW COMPONENTS TO BE PROVIDED.
2. ANY WHOLE OR PARTIAL INSULATION BOARD OR PORTION OF ANY BOARD WHICH FALLS IN THE PERIMETERS & CORNERS OUTLINED SHALL BE SUBJECT TO THE FASTENING REQUIREMENTS FOR THE HIGHEST WIND ZONE ENCOUNTERED, ACROSS THE ENTIRE BOARD.

REI ENGINEERS
Engineering solutions for tomorrow®
9121 Anson Way | Suite 100
Raleigh, NC 27615
NORTH CAROLINA ENGINEERING FIRM LICENSE # C-1520
www.reiengineers.com

SEALS:



PROJECT NAME:

LEE COUNTY NORTH CAROLINA
LCG LEE COUNTY GOVT NORTH CAROLINA

BUGGY BUILDING ROOF REPLACEMENT

115 CHATHAM STREET
SANFORD, NC 27330

PROJECT NO:
REI PROJECT # R25RAL-051
LEE COUNTY BID # 4263-01-27

ISSUE:

NO.	DATE	DESCRIPTION
CD	09-28-26	CONTRACT DOCUMENTS

THIS LINE IS 1 INCH ON THE ORIGINAL DRAWING

IF IT IS NOT 1 INCH ON THIS PAGE, SCALE DRAWING ACCORDINGLY.

SHEET TITLE

DETAILS

DRAWING

XR503

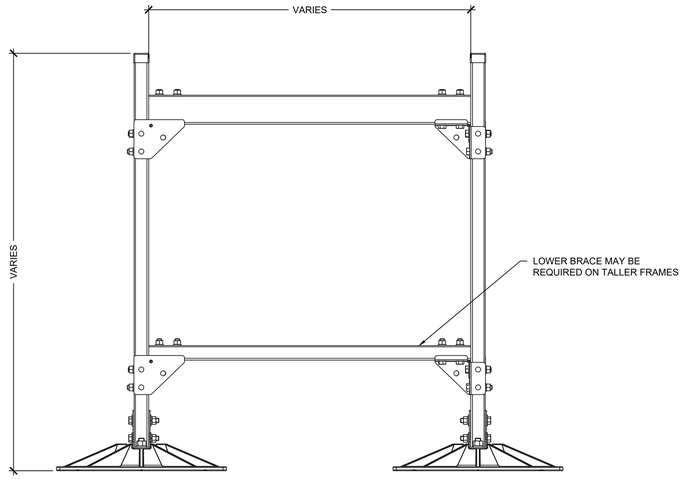

FRONT VIEW

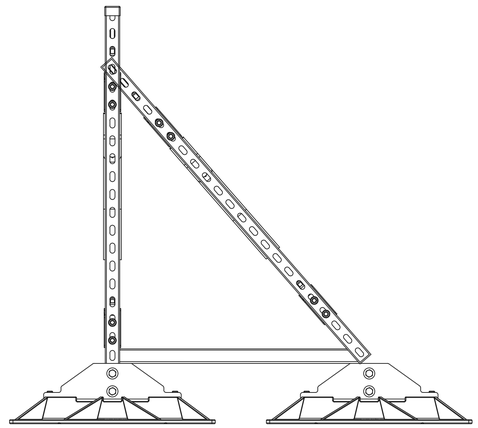

SIDE VIEW

1 ALTERNATE NO. 1: EQUIPMENT SUPPORT FOR DISCONNECT BOXES

SCALE: 1-1/2" = 1'-0"

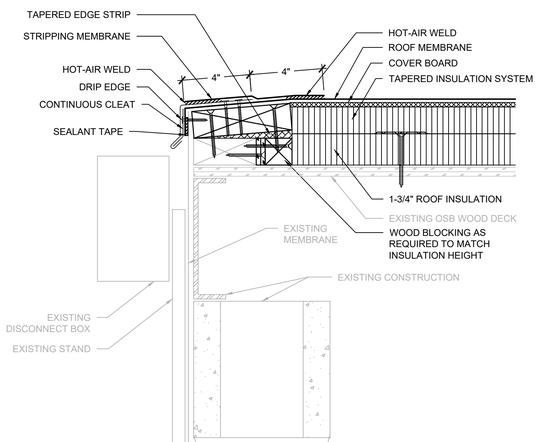

NOTES:
1. CONTRACTOR SHALL FIELD VERIFY EXISTING ROOF EDGE CONSTRUCTION AND COMPONENTS PRIOR TO SHEET METAL FABRICATION.
2. EDGE METAL SHALL BE TESTED FOR RESISTANCE TO WIND UPLIFT PRESSURES SPECIFIED IN ACCORDANCE WITH ANSI/SPRI ES-1 TEST METHODS RE-1 AND RE-2. CONTRACTOR SHALL PROVIDE SHOP DRAWING DEPICTING SHEET METAL COMPONENTS WITH DIMENSIONS AND PROVIDE EVIDENCE OF TESTING TO RESIST THE SPECIFIED WIND UPLIFT PRESSURES.

2 METAL EDGE AT SECTOR C

SCALE: 3" = 1'-0"

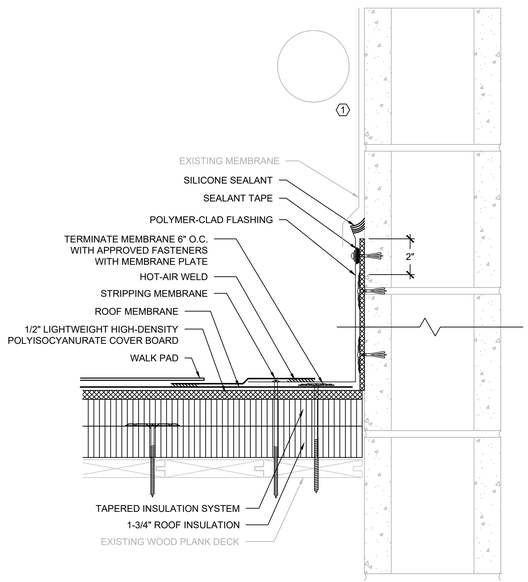

NOTES:
(1) RELOCATE CONDUITS AND CUT AND REMOVE UNI-STRUT TO ACHIEVE 8" OF BASE FLASHING HEIGHT.

4 FLASHING AT CONDUITS AT SECTOR C

SCALE: 3" = 1'-0"

GENERAL NOTES:
1. THESE DOCUMENTS ARE THE PROPERTY OF REI ENGINEERS, INC. (REI) AND REI RETAINS ALL RIGHTS THEREIN, INCLUDING COPYRIGHTS. IT MAY ONLY BE USED IN A MANNER CONSISTENT WITH REI'S RIGHTS WHILE REI IS PROVIDING SERVICE FOR THE SPECIFIC PROJECT IDENTIFIED OR REFERRED TO HEREIN OR EXTENSIONS THERETO. IT MAY NOT BE USED FOR ANY OTHER PURPOSE EXCEPT WITH THE EXPRESS WRITTEN AGREEMENT OF, AND COMPENSATION TO, REI ENGINEERS, INC.
2. DIMENSIONS, DETAIL COMPONENTS AND EQUIPMENT PENETRATION LOCATIONS ARE FOR INFORMATION ONLY. CONTRACTOR IS RESPONSIBLE TO FIELD VERIFY ALL INFORMATION PROVIDED.

SHEET NOTES:
1. FOR DETAILS, LIGHT LINES REPRESENT EXISTING CONSTRUCTION TO REMAIN AND DARK LINES REPRESENT NEW COMPONENTS TO BE PROVIDED.
2. ANY WHOLE OR PARTIAL INSULATION BOARD OR PORTION OF ANY BOARD WHICH FALLS IN THE PERIMETERS & CORNERS OUTLINED SHALL BE SUBJECT TO THE FASTENING REQUIREMENTS FOR THE HIGHEST WIND ZONE ENCOUNTERED, ACROSS THE ENTIRE BOARD.

REI ENGINEERS
Engineering solutions for tomorrow®
9121 Anson Way | Suite 100
Raleigh, NC 27615
NORTH CAROLINA
ENGINEERING FIRM
LICENSE # C-1520
www.reiengineers.com

SEALS:



PROJECT NAME:

LEE COUNTY GOVT
NORTH CAROLINA

BUGGY BUILDING ROOF REPLACEMENT

115 CHATHAM STREET
SANFORD, NC 27330

PROJECT NO:
REI PROJECT # R25RAL-051
LEE COUNTY BID # 4263-01-27

ISSUE:

NO.	DATE	DESCRIPTION
CD	09-28-26	CONTRACT DOCUMENTS

THIS LINE IS 1 INCH ON
THE ORIGINAL DRAWING

IF IT IS NOT 1 INCH ON THIS PAGE,
SCALE DRAWING ACCORDINGLY.

SHEET TITLE

DETAILS

DRAWING

XR504