SAN FRANCISCO BAY AREA
RAPID TRANSIT DISTRICT

CONTRACT BOOK

FOR
COLISEUM STATION ELEVATOR MODERNIZATION

ISSUED FOR BID

VOLUME 1 OF 2

CONTRACT NO. 15NL-140
2026

FTA PROJECT NO. 5307 & 5337

SAN FRANCISCO BAY AREA RAPID TRANSIT DISTRICT

CONTRACT BOOK

FOR

COLISEUM STATION ELEVATOR MODERNIZATION

CONTRACT NO. 15NL-140

2026

FTA PROJECT NO. 5307 & 5337

A TWO-STEP SEALED BID PROCUREMENT CONTRACT

SAN FRANCISCO BAY AREA RAPID TRANSIT DISTRICT

CONTRACT NO. **15NL-140**

TABLE OF CONTENTS

- Invitation to Bid
- Instructions to Bidders
- General Conditions for Construction Contracts
- Supplementary Conditions
- Contract Specifications
- Contract Drawings
- Technical Qualification
    - Technical Qualification Bid Checklist
    - Statement of Qualifications and Business References for Construction
    - Bidder's Bond - Single Surety
    - Bidder's Bond - Multiple Surety
    - Power of Attorney
    - Certification Regarding Financial Contributions
    - Joint Ventures Agreement (*If applicable, Bidding entity must include this)*
    - Fair Employment Practices Certification
    - Drug and Alcohol Prevention/Testing Program
    - Certificate Regarding Lobbying
    - Certification Regarding Debarment, Suspension, Ineligibility and Voluntary Exclusion – Lower Tier Covered Transactions
    - Buy America Certificate
    - U.S. DOT Bidder’s List Form
    - Certification Regarding Federal Tax Liability and Recent Felony Convictions
    - Certification of Status as Certified Qualified Conveyance Company
- Price Bid Form
    - Bid
    - Bid Schedule
    - Noncollusion Declaration
    - Designation of Subcontractors and SBEs Form
    - SBE Subcontractor Participation Affidavit
    - Bidder’s SBE Questionnaire
- Contract

Docusign Envelope ID: 590AE367-91BC-82ED-8023-D983970B9794

SAN FRANCISCO BAY AREA RAPID TRANSIT DISTRICT
INVITATION TO BID
FOR

COLISEUM STATION ELEVATOR MODERNIZATION

CONTRACT NO. 15NL-140

NOTICE IS HEREBY GIVEN that sealed Bids will be received in two parts, a Technical Qualification Bid and a Price Bid, until the hour of 2:00 p.m., Tuesday, November 10, 2026, at the District Secretary's Office, 10th Floor, 2150 Webster Street, Oakland, California 94612 (mailing address: P.O. Box 12688, Oakland, California, 94604-2688) for **COLISEUM STATION ELEVATOR MODERNIZATION,** Contract No. **15NL-140.** Only the Technical Qualification Bids will be opened publicly and announced at the said hour and date on the 1st Floor, Bid Room 161, 2150 Webster Street, Oakland, California. Bids will thereafter be accepted or rejected by the District. The Bidders are responsible to ensure their Bids are received at the time and location specified.

The time for receipt of Bids may be extended by the District's General Manager, or authorized representative, from the above-stated Bid Opening date. Notice of such extension will be published at least once in a newspaper of general circulation in the District, which publication will be at least ten (10) Days before Bids are formally received and opened.

This Contract includes requirements related to the District's Disadvantaged Business Enterprise (DBE) Program including Small Business Elements (SB Elements). The District is utilizing DBE-neutral efforts; therefore, there is no DBE goal.

Bidders' attention is directed to the Instructions to Bidders, Paragraph 10.C and Supplementary Conditions Articles SC7.1 that more fully describe the terms of the District's DBE and/or SBE Participation requirements. Inquiries regarding the District's DBE Program as well as the SBE Program Elements shall be directed to the District's Office of Civil Rights, 2150 Webster Street, 4th Floor, Oakland, CA 94612, Telephone at (510) 464-7515, or the BART's Website at: **www.bart.gov/ocr**.

REQUIRED REGISTRATION ON THE BART PROCUREMENT PORTAL

Prospective Bidders or Interested Parties (including prospective Subcontractors of any tier) who are not currently registered on the BART Procurement Portal to do business with BART are required to register on the BART Procurement Portal online at www.suppliers.bart.gov in order to download the Contract Documents (including Contract Drawings and Contract Specifications), updates, and any Addenda issued on line and be added to the Online Planholders List for this solicitation.

If a Prospective Bidder is a joint venture or a partnership, such entity must register on the BART Procurement Portal with the entity's Tax Identification Number (TIN) and download the Contract Documents so as to be listed as an Online Planholder under the entity's name prior to submitting its Bid, in order for the entity to be eligible for award of this Contract.

Prospective Bidders or Interested Parties may also purchase printed copies of the Contract Documents from the Procurement Department by downloading the Contract Documents' Order Form from the BART Procurement Portal website and submitting the completed Contract Documents' Order Form to the Procurement Department. Prospective Bidders or Interested Parties must be registered on the BART Procurement Portal to do business with BART in order to be able to download the Contract Documents' Order Form. Downloading the Contract Documents' Order Form will automatically make a Prospective Bidder or Interested Party an Online Planholder. In order to be an Online Planholder and be eligible for award of this Contract, a Prospective Bidder must either: i) download the Contract Documents for this solicitation from the BART Procurement Portal or ii) download the Contract Documents' Order Form with which to purchase the Contract Documents directly from the Procurement Department.

Docusign Envelope ID: 590AE367-91BC-82ED-8023-D983970B9794

BIDDERS WHO HAVE NOT REGISTERED ON THE BART PROCUREMENT PORTAL PRIOR TO SUBMITTING A BID AND DID NOT OBTAIN THE CONTRACT DOCUMENTS FOR THIS SOLICITATION EITHER ONLINE OR DIRECTLY THROUGH THE PROCUREMENT DEPARTMENT IN ORDER TO BE LISTED AS AN ONLINE PLANHOLDER FOR THIS SOLICITATION, WILL NOT BE ELIGIBLE FOR AWARD OF THIS CONTRACT.

BIDDERS MAY OBTAIN INFORMATION ON THE STATUS OF THE AWARD OF THIS CONTRACT BY CHECKING THE BART WEBSITE: www.bart.gov/about/bod/meetings.aspx FOR CONTRACTS SCHEDULED TO BE PRESENTED BY STAFF TO THE BART BOARD FOR AWARD CONSIDERATION.

The Work includes:

The Work is located at 7200 San Leandro Street, Oakland, CA 94621, the Coliseum Station.

The Work, in general consists of furnishing all labor, equipment, materials, and services necessary for the modernization of two existing hydraulic elevators, converting the existing storage room to a new elevator machine room, the existing elevator machine room converted to a pump filter room and a new equipment room with associated mechanical, electrical and communication modifications. Equipment installation, testing, commissioning as indicated in the Contract Drawings.

The estimated value of this Contract is $6.11M to $ 6.83M.

A pre-Bid meeting and site tour will be held on Monday, October 12, 2026. The pre-Bid meeting will convene at 10:00 a.m. via ZOOM conference**.** A conducted inspection tour of the Jobsite will take place following the pre-bid meeting. Interested prospective Bidders are requested to confirm their intention to attend by notifying the District's Contract Administrator **Claudia Hogan,** Email: chogan@bart.gov by 5:00 p.m. on Friday, October 9, 2026. All emails must include Contract No. 15NL-140 Coliseum Station Elevator Modernization.

NETWORKING SESSION: On a separate date from the Pre-Bid Meeting referenced above, the District's Office of Rights will be facilitating a teleconference Networking Session for interested firms to meet with Potential Primes for subcontracting opportunities. The Networking Session will last for 8 hours (cumulatively) and interested firms will be given 5-minute time slots to introduce themselves to the participating potential Primes. The date of Networking Session and participating Primes' RSVP contact information can be found in BART's Procurement Portal under the applicable ITB.

Interested firms are requested to RSVP directly with participation potential Primes. Additionally, each participating potential Prime will present a Networking Session RSVP schedule to the District for confirmation prior to the Networking Session.

If there are any questions regarding the Matchmaking Session(s), please contact:

San Francisco Bay Area Rapid Transit District
Office of Civil Rights
2150 Webster Street, 4th Floor
Oakland, California 94612
Attention: **Fred Edwards**
Email: **fedwar1@bart.gov**

Bids shall be submitted in accordance with, and subject to, the conditions contained in the Instructions to Bidders contained in the Contract Book to which prospective Bidders are referred.

Bid Documents may be examined at certain public and private plan rooms. Hard copies of the Bid Documents may also be examined free of charge at the District's Offices on or after Friday, October 2, 2026. The location of these plan rooms may be obtained by emailing the District's Contract Administrator at chogan@bart.gov.

Docusign Envelope ID: 590AE367-91BC-82ED-8023-D983970B9794

Prospective Bidders or Interested Parties that elect to purchase printed copies of the Contract Documents, must first download the Contract Documents' Order Form from the BART Procurement Portal website and then submit the completed Contract Documents' Order Form to the Contract Administrator at chogan@bart.gov. Such printed copies of the Contract Documents shall be purchased with either check, or postal money order drawn in favor of the San Francisco Bay Area Rapid Transit District in the following amount, which includes any applicable sales tax, and is not refundable:

Contract Book and Contract Drawings (Includes forms for submittal of Bids) $150.00

BART Facilities Standards, Standard Specifications, Release – R3.1.2 dated April 2018 may be downloaded from the District website: https://webapps.bart.gov/BFS/bfs_spec.html.

Copies of the current edition of the Standard Specifications of the Department of Transportation, State of California, can be purchased at the Caltrans Office, located at 1900 Royal Oaks Drive, Sacramento, California, telephone (916) 654-2852 or by written request to: Department of Transportation, Publication Unit, 1900 Royal Oaks Drive, Sacramento, CA 94815 or by visiting the following website, **www.dot.ca.gov/**

Bidders are informed that all of these documents will be required in the preparation of Bids. Each Bid shall be on a prescribed Bid Form and shall be for the entire Contract including all Bid Items.

The District may reject any and all Bids.

At the time of Contract Award, the Bidder must have a valid State Contractor's license, **Classification A (General Engineering) or Class B (General Building)**, and be in good standing with the Contractors' State License Board. Bidder shall also submit with the Bid, proof of current registration with the State Department of Industrial Relations (DIR) in conformance with the requirements of State Labor Code Section 1725.5 and Section 1771.1. If the Bidder is a joint venture, each of the joint venturers as well as the joint venture must have a current, active license in good standing to act separately in the capacity of a Contractor within the State, in accordance with Section 7029 and 7029.1 of the State Business and Professions Code and also be currently registered with the State DIR, or the Bid may be rejected. Also, if the Bidder is a Joint Venture, the Bidder may submit its valid State Contractor's license number, classification, and expiration date with the Bid but shall submit such information no later than 2:00 p.m. on Friday of the week following the date of Bid opening to the Contract Administrator at the address indicated in the Instructions to Bidders. Any Bid submitted by a Specialty Contractor must be in compliance with Section 7059 of the State Business and Professions Code.

The Bidder, or the Bidder's named elevator subcontractor, must hold a current, valid **Certified Qualified Conveyance Company (CQCC) License** issued by the State of California. The Bidder, or the Bidder's named elevator subcontractor, must hold a current, valid **Class C-11 Elevator Contractor License** issued by the State of California Contractors State License Board (CSLB). The Bidder, or the Bidder's named fire protection subcontractor, must hold a current, valid **Class C-10 Electrical Contractor License** issued by the State of California Contractors State License Board (CSLB). The Bidder shall provide a copy of these active state licenses with their Qualification Bid.

All Work shall be performed in accordance with the Laws of the State of California.
Special attention is directed to Division 2, Part 7, Chapter 1, Article 2 of the State Labor Code concerning wages. Contractor and each Subcontractor shall pay to all workers employed on the Work not less than the prevailing rate of wages as determined by the Director of the State Department of Industrial Relations or set out in the wage determination of the U.S. Secretary of Labor, whichever is higher. Pursuant to Section 1773 of the State Labor Code, the District has obtained from the Director of the State Department of Industrial Relations the general prevailing rate of per diem wages and the general prevailing rate for holiday and overtime work in the locality in which the Work is to be performed and has copies available upon request from BART Procurement Department, 2150 Webster Street, 4th Floor, Oakland California 94612. The wage determination of the U.S. Secretary of Labor is attached hereto following Supplementary Conditions Article SC10. For a craft or classification not shown on the general prevailing wage determinations, Contractor may be required to pay the wage rate of the most closely related craft or classification shown in such determinations for Contract Work or request a wage determination from the State Department of Industrial Relations for the craft or classification.

Docusign Envelope ID: 590AE367-91BC-82ED-8023-D983970B9794

The Contractor and all Subcontractors shall comply with all applicable requirements of California Labor Code Section 1777.5 which, among other things, requires that only registered apprentices, as defined by Labor Code Section 3077, can be employed at the apprentice wage rate on public works.

Bidder's attention is directed to Supplementary Conditions Article SC7.3.1 which describes the State Labor Code Section 1725.5 and Section 1771.1 that, among other things, require all Contractors and Subcontractors to be registered with the DIR in order to be qualified to bid on this Contract or to be listed as a Subcontractor on any Bid submitted subject to the requirements of Section 4104 of the Public Contract Code, or engage in the performance of work in this Contract.

Bidders are informed that pursuant to Section 1771.4 of the State Labor Code, this Contract is subject to compliance monitoring and enforcement by the DIR. Furthermore, the Contractor shall post Jobsite notices, as prescribed by regulation. Pursuant to Section 1775 of the State Labor Code, the Contractor and Subcontractors are subject to being assessed a penalty of up to two hundred dollars ($200) by DIR for each calendar Day for each worker who is paid less than the prevailing wage rate for the work or craft in which the worker is employed. Each Contractor and Subcontractor shall furnish the payroll records specified in Section 1776 of the State Labor Code directly to the Labor Commissioner at least monthly and in a format prescribed by the Labor Commissioner. In addition, under Section 1815 of the State Labor Code, workers who perform work in excess of eight (8) hours per Day, or more than forty (40) hours during any week, shall be compensated at no less than 1 ½ times the basic rate of pay for all hours worked in excess of eight (8) hours per Day, and any hours in excess of forty (40) hours during any week. Pursuant to Section 1813 of the State Labor Code, DIR may impose additional penalties of twenty-five dollars ($25) for each worker employed for each calendar Day during which the worker is required or permitted to work more than eight (8) hours a Day or forty (40) hours in a week without paying the required compensation.

Within seven (7) Days following NTP, the Contractor shall register at BART's designated website for electronic submittal of Certified Payroll Records. BART's Office of Civil Rights will notify the Contractor and provide all necessary information related to the BART's designated website for electronic submittal of Certified Payroll Records. Each week, the Contractor and its Subcontractors shall submit their respective Certified Payroll Records electronically to BART's designated website in accordance with the requirements of the website. These records shall be provided within seven (7) Days after the regular payment date of the payroll period. The Contractor shall complete the form at BART's designated website with the names of the Subcontractors that invoiced the Contractor during the payment application period, the amount invoiced by each Subcontractor, and the period during which the work included in the invoice was performed. Failure to comply with these requirements may cause a suspension of progress payments during the period of noncompliance or may delay final payment. Contractor shall include in its Subcontracts, and require its Subcontractors of every tier to include in their respective Subcontracts, provisions incorporating the requirements of this requirement for electronic submittal of Certified Payroll Records."

This Contract is subject to a financial assistance contract between the District and the United States Department of Transportation. This Contract is partially funded under a grant from the Federal Transit Administration (FTA). Attention is directed to the Bid Form where all Bidders and certain proposed Subcontractors and subsuppliers will be required to certify that they and any such proposed Subcontractors and subsuppliers have not been debarred, suspended or declared ineligible to participate in U.S. Government contracting activity. Contractor will be required to comply with all applicable Equal Employment Opportunity Laws and Regulations.

Attention is directed to the Bid Form where all Bidders and any proposed Subcontractors or subsuppliers of any tier receiving an amount in excess of $100,000 under this Contract will be required to execute the "Certification Regarding Lobbying". The Bidder is responsible for forwarding all such Certifications to the District within the time frame specified in the Instructions to Bidders.

Special attention is directed to General Conditions Article GC7.1.2 outlining Contractor's responsibilities for affirmative action relating to Fair Employment Practices.

The District hereby notifies all Bidders that it will affirmatively ensure that in regard to any Contract entered into pursuant to this Invitation to Bid, SBEs will be afforded full opportunity to submit Bids in response to

Docusign Envelope ID: 590AE367-91BC-82ED-8023-D983970B9794

this invitation and will not be discriminated against on the basis of race, color, sex, or national origin in consideration for an award.

The San Francisco Bay Area Rapid Transit District, in accordance with Title VI of the Civil Rights Act of 1964, 78 Stat. 252, 42 USC 2000d to 2000d-4 and Title 49, Code of Federal Regulations (CFR), Department of Transportation, Subtitle A, Office of the Secretary, Part 21, Nondiscrimination in Federally-Assisted Programs of the Department of Transportation, issued pursuant to such Act, hereby notifies all Bidders that it will affirmatively ensure that in any Contract entered into pursuant to this advertisement, minority business enterprises will be afforded full opportunity to submit Bids in response to this invitation and will not be discriminated against on the grounds of race, color, or national origin in consideration for an award.

The Contractor and its Subcontractors shall not discriminate on the basis of race, color, national origin, or sex in the performance of the Contract. The Contractor and its Subcontractors shall comply with the applicable requirements of 49 CFR Part 26 in the performance of the Contract. Failure to comply with these requirements by the Contractor is a material breach of the Contract and may be subject to sanctions, including termination of the Contract, as appropriate.

Bidders' attention is directed to the Instructions to Bidders Paragraph 10.A.5 entitled Financial Contribution Limitations. This Paragraph details Bidder's responsibility for complying with BART Board of Directors Rule regarding financial contribution limitations.

Bidder's attention is directed to Supplementary Conditions Article SC7.11 Iran Contracting Act of 2010 which provides, among other things, that by submitting a Bid Bidder certifies that it is not on the California Department of General Services list of ineligible vendors or persons that provide goods and services to the energy sector of Iran.

Bidders' attention is directed to General Conditions Article GC9.7.1.1 which permits the substitution of securities by Contractor for any monies retained by the District to insure performance under this Contract.

Bidder's attention is directed to the Certification of Status as Certified Qualified Conveyance Company, which is included in the Bid Form.

Each Bid shall be accompanied by a Bidder's Security equal to at least ten percent (10%) of the total Bid Price which shall remain in full force and effect for the period of time stated in the Instructions to Bidders, Paragraph 19.E Time of Award. The Bidder's Security must be in the form of cash, a cashier's check, a certified check, a Bidder's Bond, or a combination thereof. The Bidder to whom the Contract is awarded shall furnish specified Certificates of Insurance. Such Bidder shall also furnish a Performance Bond and a Labor and Materials Bond (Payment Bond), each in an amount not less than one-hundred percent (100%) of the Contract Price. Bonds shall be on forms provided by the District and shall be executed as surety by a corporation or corporations Authorized to issue surety bonds in the State of California, as an admitted surety insurer and acceptable to the District.

Dated at Oakland, California, this 28th day of September 2026.

DocuSigned by:
Robert Franklin
AE4529E1F0D45C...

Robert Franklin, District Secretary
San Francisco Bay Area Rapid Transit District

SAN FRANCISCO BAY AREA RAPID TRANSIT DISTRICT
INSTRUCTIONS TO BIDDERS
FOR

COLISEUM STATION ELEVATOR MODERNIZATION

CONTRACT NO. 15NL-140

1. INTRODUCTION: The District will evaluate and recommend award of this Contract pursuant to a two-step sealed Bid procedure as described below.

2. TWO-STEP SEALED BID OVERVIEW: Bidders shall abide by the two-step sealed bid and award process indicated herein, by which minimum technical qualifications necessary for performance of the Work will be evaluated prior to the opening and disclosure of Price Bids. A summary of the two-step sealed bid process to be utilized for this Contract is indicated herein.

2.A STEP ONE is the Technical Bid evaluation phase in which Technical Qualification Bids received will be opened and evaluated in accordance with Article 19.A of these Instructions to Bidders. Only those Bidders submitting acceptable Technical Qualification Bids, as determined by the District, to the extent it may be determined pending the opening of the Price Bids, will have their Price Bids opened in Step Two. A summary of the procedures to be utilized in Step One is as follows:

2.A.1 Bidder shall submit a Technical Qualification Bid and a Price Bid in separately sealed envelopes.

2.A.2 The receipt of the Technical Qualification Bids and the Price Bids will be acknowledged and publicly announced at the said hour date and place stated in the Invitation to Bid. The time and place for the public opening and public announcement of the Price Bids will be as set forth in Article 19.B.1 of these Instructions to Bidders.

2.A.3 The Technical Qualification Bids will be reviewed by a Selection Committee composed of District staff, as well as other participants that the District may deem appropriate.

2.A.4 The Selection Committee will make a preliminary determination of the responsiveness of the Technical Qualification Bids and the responsibility of the Bidders. Bids determined to be non-responsive or Bidders determined to be non-responsible will not be considered for award.

2.A.5 The response to Minimum Technical Requirements submitted as part of Technical Qualification Bids will be evaluated on a pass/fail basis. Technical Qualification Bids that fail the minimum technical requirements will be determined by the District to be unacceptable and will not be considered further for award.

2.A.6 The Selection Committee may request clarifications or enter into discussions with Bidders. Any written communications from a Bidder (other than a point of clarification expressly requested by BART) that is, or in BART's sole judgment appears to be, a modification to a Bid, will not be considered for evaluation purposes and will be returned to the Bidder. Technical Qualification Bids determined by the District to be unacceptable, either initially or after clarifications or discussions, will not be considered further for award.

2.A.7 Only those Bidders whose Technical Qualification Bid has been determined by the District to be acceptable to the extent bids may be evaluated pending opening of Price Bids, will have their Price Bids opened in Step 2.

2.B STEP TWO is the Price Bid phase in which Bidder's Price Bids are opened and evaluated. A summary of the procedures to be utilized in Step 2 is as follows:

2.B.1 Only those Bidders whose Technical Qualification Bid has been determined by the District to be acceptable in Step 1, to the extent the bids may be evaluated pending opening of the Price Bids, will have their Price Bid opened and evaluated.

2.B.2 Price Bids will be publicly opened and publicly announced.

2.B.3 The District will determine the lowest Price Bid in accordance with Article 19.C and make a recommendation for award, if any.

3. REQUIRED SUBMITTALS: The Bid shall consist of a Technical Qualification Bid, and a Price Bid as follows:

3.A Step 1 Submittals (Technical Qualification Bid):

3.A.1 The following shall be submitted as part of Bidder's Technical Qualification Bid and will be evaluated for responsiveness.

3.A.1.a Statement of Qualifications and Business References (Refer to Paragraph 10.A.1 of these Instructions to Bidders).

3.A.1.b Bidder's Security. (Refer to Paragraph 10.A.2 of these Instructions to Bidders).

3.A.1.c Power of Attorney. (Refer to Paragraph 10.A.3 of these Instructions to Bidders).

3.A.1.d Certification Regarding Financial Contributions (Refer to Paragraph 10.A.5 of these Instructions to Bidders).

3.A.1.e Joint Venture Agreement, if required (Refer to Paragraph 10.A.6 of these Instructions to Bidders).

3.A.1.f Fair Employment Practices Certification (Refer to Paragraph 10.A.7 of these Instructions to Bidders).

3.A.1.g Certification Regarding Debarment, Suspension, Ineligibility and Voluntary Exclusion – Lower Tier Covered Transactions (Refer to Paragraph 10.J of these Instructions to Bidders).

3.A.1.h Buy America Certificate (Refer to Paragraph 10.I of these Instructions to Bidders).

3.A.1.i Certification Regarding Federal Tax Liability and Recent Felony Convictions(Refer to Paragraph 10.M of these Instructions to Bidders).

3.A.1.j Drug and Alcohol Testing Program Certificate (Refer to Paragraph 10.A.8 of these Instructions to Bidders).

3.A.2 The following shall be submitted as part of Bidder's Technical Qualification Bid and will be evaluated on a pass/fail basis:

3.A.2.a Response to Minimum Technical Requirements (Refer to Paragraph 10.A.1.1 of these Instructions to Bidders).

3.B Step 2 Submittals (Price Bid):

3.B.1 The following document shall be submitted as part of Bidder's Price Bid and will be publicly opened and publicly announced as set forth in these Instructions to Bidders:

3.B.1.a A completed Price Bid Schedule (Refer to Article 10.C.1 of these Instructions to Bidders).

3.B.1.b A completed Designation of Subcontractors and SBE Participation Form (Refer to Paragraph 10.A.4 of these Instructions to Bidders).

4. OBTAINING BID DOCUMENTS: Bid Documents shall be obtained as described in the Invitation to Bid.

5. RELATED INFORMATION AVAILABLE TO BIDDERS: Additional information, if any, not included in the Bid Documents will be available for Bidder's inspection by calling the Contract Administrator.

6. EXAMINATION OF CONTRACT DOCUMENTS AND SITE OF WORK: The Bidder shall examine carefully the Contract Documents and the site of the Work. Actual on-site dimensions and conditions may not be exactly as indicated in the Contract Documents. Bidders shall verify all dimensions critical to their Bids. By submitting a Bid, the Bidder represents that Bidder has investigated and accepts the conditions to be encountered and the character, quality, and scope of work to be performed, materials to be furnished, and the requirements of the Contract Documents.

7. EXAMINATION OF REFERENCE DOCUMENTS: Reference Documents if any will be available for examination by prospective Bidders at **2150 Webster Street, 4th Floor, Oakland, CA 94612.** Examination shall be during regular business hours and shall be by advance request and arrangement with the District's Procurement Office, chogan@bart.gov. The District makes no representation or guarantees that any examined Reference Documents are complete, accurate or pertinent, as they were originally prepared for other purposes and do not form a part of this Contract. The District is not responsible for any conclusions, which may be drawn from examination of the available Reference Documents indicated herein.

8. EXPLANATIONS: Prospective Bidders who wish explanations or clarifications of the Contract Drawings, Specifications, or other Contract Documents, or of these Instructions to Bidders, must submit their inquiries in writing to the District. Such inquiries shall identify the Contract name and number, and shall be directed to the BART Procurement Department, Attention: Contract Administrator , chogan@bart.gov. Any response that the District may choose to make will be by a written Addendum to the Contract Documents. Prospective Bidders or Interested Parties on the On-Line Planholders List will receive email notifications of any Addenda via the BART Procurement Portal and will be required to check the BART Procurement Portal for the details of the Addenda. All On-Line Planholders will be required to download any Addenda from the BART Procurement Portal. However, any On-Line Planholder who purchased printed copies of the Contract Documents from the District Secretary, may have the Addenda transmitted to them in a manner

that provides verification of receipt, ONLY upon request to the Contract Administrator. The District will not be bound by any explanation, clarification, or interpretation, oral or written, by whomsoever made, that is not incorporated into an Addendum to the Contract Documents. The receipt of Addenda by the Bidder shall be acknowledged and shall be noted on the space provided in the Bid Form. No response will be made to inquiries received by the District less than fourteen (14) days before the scheduled Bid opening.

8.A. Public Disclosure: The District is subject to the California Public Records Act (Government Code Section 7920 et seq.) and any documents submitted except Statements of Qualifications and Business References, which are exempt from public inspection pursuant to California Public Utilities Code Section 99154, shall be subject to public inspection and copying pursuant to the California Public Records Act. In addition, Bidders should specifically identify any portion of their Bids which they deem to contain confidential, proprietary information or trade secrets (confidential information) and will be required to prove, upon request, justification and defense of Bidder's position that such material should not be disclosed by the District under the California Public Records Act.

In the event there is a Public Records Act request filed with BART seeking disclosure of information that has been designated confidential information by Bidder pursuant to the Bid, BART agrees to give Bidder prompt written notice of such request, and Bidder agrees to assist BART in responding to the request by reviewing the documents requested and confirming that Bidder wishes that they not be made public by BART. In addition, Bidder agrees to hold BART harmless and, at BART's option, provide legal defense for BART from all claims and demands including attorneys' fees asserted against BART that may result from BART refusing to make public documents that Bidder has designated as confidential information. Bidder also agrees that, if any action is filed in court seeking disclosure of the confidential information designated by Bidder, BART may deposit the documents with the court and Bidder will defend its designation of the information as confidential information.

9. PROTESTS:

9.A Address: All protests must be in writing, stating the name and address of protestor, a contact person, Contract number and/or title and shall specify in detail the grounds of the protest and the facts supporting the protest.

All protests must be addressed as follows:

For Special Delivery or Hand Delivery:

Office of the District Secretary
San Francisco Bay Area Rapid Transit District (BART)
2150 Webster Street, 10th Floor
Oakland, CA 94612

For U.S. Mail:

Office of the District Secretary
San Francisco Bay Area Rapid Transit District (BART)
P.O. Box 12688
Oakland, CA 94604-2688

Protests not properly addressed to the District Secretary may not be considered by the District.

Copies of the District's Protest Procedures and the protest provisions of Federal Transit Administration (FTA) Circular 4220.1G may be obtained from the District's Division of Contract Administration, P.O. Box 12688, Oakland, California 94604-2688, Email: chogan@bart.gov. Bids will be opened and a Notice of Award will be issued by the District in accordance with the District's Protest Procedures and the protest provisions of FTA Circular 4220.1G.

9.B Pre-Bid Protests: Pre-Bid Protests are protests based upon the content of the solicitation documents. Pre-Bid protests must be received by the District Secretary's Office no later than ten (10) Days prior to Technical Qualification Bid opening. A written decision specifying the grounds for sustaining all or part of or denying the protest will be transmitted to the protestor prior to the opening of Technical Qualification Bids in a manner than provides verification of receipt prior to the opening of Technical Qualification Bids. If the protest is sustained, the Technical Qualification Bid opening date may be postponed and an Addendum issued to the solicitation documents or, at the sole discretion of the District, the advertisement may be canceled. If the protest is denied, Bids will be received and opened on the scheduled date unless a protest is filed with FTA. See Paragraph 9.D below.

9.C Protests on the Recommended Award: All Bidders will be notified of the recommended Award. This notice will be transmitted to the Bidder at the address contained in its Bid Form in a manner that provides verification of receipt. Any Bidder whose Bid has not lapsed may protest the recommended Award on any ground not specified in Paragraph 9.B above. A full and complete written statement specifying in detail the grounds of the protest and the facts supporting the protest must be received by the District Secretary at the appropriate address in Paragraph 9.A above no later than seven (7) Days after the date such notification is received. A written decision stating the grounds for allowing or denying the protest will be transmitted to the protestor and the Bidder recommended for Award in a manner that provides verification of receipt, prior to issuing the Notice of Award. Such decision shall be final.

9.D FTA Review: A Bidder or prospective Bidder who submits a protest may request FTA review of District action on a protest subject to the following requirements: FTA review is limited to alleged violations of Federal law or regulation; an appeal to FTA must be received by FTA's Regional Administrator for Region IX in San Francisco, within five (5) Working Days after the District's final Decision is received by the Bidder or prospective Bidder or five (5) Working Days after the Bidder or prospective Bidder learned or should have learned of the District's final Decision or other basis of appeal to FTA; a copy of the appeal filed with the FTA shall be submitted to the District Secretary.

10. PREPARATION OF TECHNICAL QUALIFICATION BIDS AND PRICE BIDS: All costs for developing, submitting, and presenting Bids are the responsibility of the Bidder. Bidders shall complete its Technical Qualification Bid and its Bid Price as indicated herein and in accordance with the following: The number of copies required shall be as indicated in Paragraph 12 of these Instructions to Bidders.

10.A Technical Qualification Bid: Bidders shall prepare and submit the following documents along with the Technical Qualification Bid Checklist which shall constitute its Technical Qualification Bid.

10.A.1 Statement of Qualifications and Business References: Bidder shall submit with its Technical Qualification Bid, a completed Statement of Qualifications and Business References Form. A copy of the Form is included in the Bid Documents. The District will, to the extent permitted by law, treat the information as confidential, except that parts of it may be discussed with persons and firms referenced by the Bidder. If the Bidder is a partnership or

joint venture, in addition to the form submitted for the Bidder, each general partner/joint ventures shall prepare and submit a separate form. Extra forms, if needed, can be obtained from the District. If a Bidder is a joint venture, a copy of the executed joint venture agreement shall be attached to the Statement of Qualifications and Business References for Procurement. The name of the joint venture in the joint venture agreement shall match the name of the joint venture in the Statement of Qualifications and Business References indicated in the Bid, and other forms and certifications required to be submitted with the Bid. Bids submitted by Bidders with inadequate experience or capacity may be rejected at the discretion of the District.

10.A.1.1 Minimum Technical Requirements: Bidder shall submit with its Technical Qualification Bid, a response to the minimum Technical Requirements as indicated in Paragraph 11 of these Instructions to Bidders. The response to the questions and the information provided shall be typewritten on paper 8-1/2" x 11" in size. Any larger sheets shall be folded to that size. Pages shall be consecutively numbered. The Bidder shall provide all of the information requested and answer all of the questions. The information provided shall be in the same sequence as listed herein and the numbering system shall be cross-referenced to that listed herein.

10.A.2 Bidder's Security: All Technical Qualification Bids shall be accompanied by Bidder's Security in the amount of ten (10) percent of the "total Bid Price", payable to the San Francisco Bay Area Rapid Transit District. The Bidder's Security must be in the form of cash, a cashier's check, a certified check, or a Bidder's bond, or a combination thereof. If a Bidder's bond is furnished, it must conform to the form provided with the Bid Documents, and the surety thereon must be a corporation or corporations acceptable to the District and authorized to issue surety bonds in the State of California as an admitted surety insurer. Bidders' Securities will be held until the Contract has been fully executed, after which all Bidders' Securities except any Bidder's Securities which have been forfeited, will be returned to the respective Bidders whose Bids they accompany, but in no event will Bidders' Securities be held by the District beyond, sixty (60) days from the Award of the Contract. District staff, other than the Selection Committee, will review Bidders' Securities in order to ensure that the Committee is not aware of prices prior to opening of the Price Bids.

10.A.3 Power of Attorney: Refer to Paragraph 10.B.3 of these Instructions to Bidders for the requirements for the submittal of a Power of Attorney, if required.

10.A.4 Designation of Subcontractors and SBE Participation Form: Bidders shall comply with the requirements for designation of subcontractors by completing the Designation of Subcontractors and SBE Form and submitting the completed form with the Technical Qualification Bid.

10.A.5 Financial Contribution Limitations: The Board of Directors of the San Francisco Bay Area Rapid Transit District adopted a Board rule limiting financial contributions to Board members and candidates for Director (Rules of the Board of Directors, Chapter V, Section 5, as amended from time to time, hereinafter referred to as "the Rule"). In regard to any contract award requiring authorization of the Board, the rule prohibits Bidders and any proposed first tier Subcontractor or Subsupplier whose contract exceeds $100,000, from making any monetary or in-kind contribution (including loans) in excess of $1,000 to a BART Director or any candidate for Director.

For purposes of the Rule, the term "contribution" shall have the same meaning as defined in Government Code Section 82015 and implementing regulations adopted by the Fair Political Practices Commission.

The Rule shall be effective from the date Technical Bids are opened by the District and continue until the award of the Contract.

The Rule will continue to apply in regard to the successful Bidder awarded the Contract, and each first tier Subsupplier whose Subcontract exceeds $100,000, for three (3) months following Award.

Bidder shall require each proposed Subcontractor or Subsupplier whose subcontract exceeds $100,000 to comply with the Rule.

Attention is directed to the Technical Bid Form. Bidder, and each proposed Subcontractor or Subsupplier whose subcontract exceeds $100,000, shall be required to execute the "Certification Regarding Financial Contributions".

Bidder must use its best efforts to collect the Certification from each first tier Subcontractor or Subsupplier whose subcontract exceeds $100,000 and submit such Certifications along with its own to the District with the Technical Bid on the date Technical bids are due.

Bidder is advised that all Certifications must be submitted on the date Technical Bids are due unless there is reasonable cause for delay; however, Bidders are cautioned that unless all Certifications are submitted within five (5) Days after the date Technical Bids are due, the Bid may be considered non-responsive.

Certifications submitted after Bid due date shall be submitted to:

San Francisco Bay Area Rapid Transit District (BART)
Contract Administration Division
2150 Webster Street, 4th Floor
Oakland, CA 94612
Email: chogan@bart.gov

Attention: Claudia Hogan

Email transmission of the Certifications will be acceptable by the above deadline subject to subsequent receipt of originals by express or U.S. mail, prior to Award.

Please direct any questions regarding the rule to **Claudia Hogan, chogan@bart.gov.**

10.A.6 Joint Venture Agreement: Bidders shall submit joint venture Agreement, if applicable, with the Technical Qualification Bid.

10.A.7 Fair Employment Practices Certification: Bidders shall complete and sign the Fair Employment Practices Certification and submit it with the Technical Qualification Bid.

10.A.8 Drug and Alcohol Prevention/Testing Program: Pursuant to 49 CFR Parts 40, and 655, as they may be amended from time to time ("the federal rules"),

Bidder shall complete and sign the certificate regarding compliance with the Federal Drug and Alcohol Prevention/Testing Program contained in the Bid Form and submit it with the Bid. Bidder shall also submit with the Bid, a drug and alcohol program policy statement adopted by the Bidder's governing Board, for its review by the District for compliance. If the Bidder's signed certificate and/or its drug and alcohol program policy statement is not submitted with the Bid, they must be submitted by the Bidder to the District not later than 2:00 p.m. on Friday of the week following the date of Bid opening.

Bidders are advised that failure to submit both the signed certificate and a copy of Bidder's drug and alcohol program policy which meets the requirements of the federal rules by the Friday of the week following the date of Bid opening may render the Bid non-responsive.

Bidder's drug and alcohol program policy statement should contain the elements specified in 49 CFR Part 655 including:

1. The identity of the person designated to answer employee questions about the drug/alcohol program;

2. The categories of employees who are subject to the provisions of the policy;

3. Sufficient information about the safety sensitive functions performed by those employees to make clear what period of the work day the covered employee is required to be in compliance;

4. Specific information concerning employee conduct that is prohibited;

5. The specific circumstances under which a covered employee will be tested for prohibited drugs and/or alcohol in accordance with the federal rules;

6. The procedures that will be used to test for drugs and for alcohol, protect the employee and the integrity of the testing process, safeguard the validity of the test results, and ensure that test results are attributed to the correct covered employee;

7. The requirement that a covered employee submit to drug and/or alcohol testing administered in accordance with the federal rules;

8. A description of the kind of behavior that constitutes a refusal to take a drug or alcohol test and a statement that such a refusal constitutes a verified positive drug or alcohol test result;

9. The consequences for a covered employee who has a verified positive drug or alcohol test result or refuses to submit to a drug or alcohol test under the federal rules, including the mandatory requirements that the covered employee be removed immediately from his or her safety sensitive function and be evaluated by a substance abuse professional;

10. The consequences for covered employees found to have an alcohol concentration of 0.02 or greater but less than 0.04;

11. Specific information concerning the effects of alcohol misuse on an individual's health, work, and personal life; signs and symptoms of an alcohol problem (the employee's or a coworker's) and available methods of intervening when an alcohol

problem is suspected, including confrontation, referral to any available Employee Assistance Program (EAP) and/or referral to management; and

12. Identification of which provisions of Bidder's policy are mandated by the federal rules and which are not.

A model written policy statement published by FTA may be obtained by the Bidder from the Manager of Employee Services, San Francisco Bay Area Rapid Transit District, P.O. Box 12688, Oakland, California 94604-2688, telephone Number (510) 464-6198. **A signed certificate or Bidder's drug and alcohol program policy statement submitted after Bid opening date shall be submitted to:**

San Francisco Bay Area Rapid Transit District
Contract Administration Division
2150 Webster Street, 4th Floor
Oakland, CA 94612
Email: chogan@bart.gov

Attention: Claudia Hogan

Email transmissions will be acceptable by the above deadline subject to subsequent receipt of originals by express or U.S. mail, prior to Award.

10.A.9 Certification of Status as Certified Qualified Conveyance Company: Bidder or any Subcontractor that is performing work on a conveyance, subject to the requirements of California Labor Code Section 7311.1.(a), shall submit an executed Certification of Status as Certified Qualified Conveyance Company as well as a copy of its Certification issued by the State of California, Division of Occupational Safety and Health. Bidder is advised that the Certificates must be submitted on the Bid date unless there is reasonable cause for delay; however, Bidder is cautioned that failure to submit the Certificates by 2:00 p.m. on Friday of the week following the date Bids are due may result in rejection of the Bid.

10.B Price Bid Form: The Price Bid Form, when executed and submitted by the Bidder shall constitute the Bidder's Price Bid. Price Bids not presented on such Form will be disregarded. Bidders shall observe the following instructions in completing the Price Bid Form; FAILURE TO DO SO MAY RESULT IN REJECTION OF THE BID.

10.B.1 Addenda: Receipt of all Addenda must be acknowledged. Space is provided in the Bid Form for this purpose.

10.B.2 Prices: Unit Prices, lump sum, and other prices as indicated, must be entered by the Bidder in the appropriate spaces provided. If applicable, Unit Prices shall be multiplied by the estimated quantities, and the calculated value inserted in the item total column of the Bid Schedule by the Bidder. In the event where the Bid Unit Price and the item total are entered, and there is a discrepancy between the Bid Unit Price and the amount entered in the item total column, the Bid Unit Price shall govern. However, if the Unit Price is not entered but the item total is provided, then the District will calculate the Unit Price by dividing the item total by the estimated quantity for that Bid Item. Conversely if the item total is not entered but Unit Price is provided, then the District will calculate the item total by multiplying the estimated quantity by the Unit Price. For lump sum items, Bidder shall enter the individual lump sum prices bid in the item total column of the Bid Schedule. The item totals shall be added to arrive at the total Bid Price.

10.B.2.a Estimated Quantities: Estimated quantities, if indicated in the Bid Schedule are approximate and are used solely for the purpose of evaluating Bids. The District does not represent, expressly or by implication, that the actual amount of work will correspond to the estimated quantities, and further reserves the right to increase or decrease the amount of any or all Bid Items, and to omit portions of the Work.

10.B.3 Signing of Both Technical Qualification and Price Bid: If the Bidder is a corporation, then both Technical Qualification Bid and Bid Price shall be signed by an Authorized officer of the corporation; if the Bidder is a partnership, the Bid shall be signed by a general partner having the power to bind the partnership contractually; if the Bidder is a joint venture, the Bid shall be signed by all of the joint venturers; or if the Bid is signed by an agent for the Bidder, other than as provided above, a power of attorney shall be submitted with the Bid. Bidders submitting a Bid as a joint venture must have an executed joint venture agreement as of the Bid Date and a copy of the executed joint venture agreement shall be attached to the Statement of Qualifications and Business References for Construction. If the Bidder is a joint venture, each of the joint venturers must have a current, active license in good standing to act separately in the capacity of a Contractor within the State, in accordance with Section 7029 and 7029.1 of the State Business and Professions Code and also be currently registered with the State DIR or the Bid may be rejected. Bidder shall submit evidence of the authority of the person signing the Bid along with the Bid.

10.A.B.a Name of Joint Venture: If the Bidder is a joint venture, the name of the joint venture in the Bid and other forms and certifications required to be submitted with the Bid shall match the name of the joint venture as provided in the joint venture agreement.

10.B.4 Bid Completion Instructions: Bidders shall observe the following instructions in completing the Bid Form; FAILURE TO DO SO MAY RESULT IN REJECTION OF THE BID:

10.B.4.a Modification: The Bidder shall not delete, modify, or supplement the printed matter on the Bid Form or make substitutions therefor.

10.B.4.b Completion: The Bid Form and the other accompanying forms shall be completed in ink and printed or typed. Bidders must submit a completed Bid for all items in the Bid Form to be considered responsive.

10.B.4.c Information: Identifying information, such as the Bidder's name, address, and state of incorporation, shall be entered in the spaces provided.

10.B.4.d Corrections: Corrections shall be initialed by the person who signs the Bid.

10.C Designation of Subcontractors: Bidders shall comply with the requirements for designation of Subcontractors set forth in General Conditions Article GC5.7.1, by completing Part I of the Designation of Subcontractors and SBEs Form and submitting the completed form with the Bid in accordance with the requirements of Paragraph 10.C.1 below. (This Form is part of the Bid Form).

"The Contractor shall perform with its own organization Contract Work amounting to not less than Twenty-five percent (25%) of the total Bid Price, excluding any Allowance and Option Bid Items, if applicable."

10.C.2 The following information required in Part I: name, address, description of portion of work or services subcontracted and total dollar amount of subcontracted work or services, and California contractor license number of each Subcontractor shall be submitted with the Bid. An inadvertent error in listing a Subcontractor's California contractor license number may be corrected by the Contractor within twenty-four (24) hours after the Bid opening provided the corrected contractor's license corresponds to the submitted name and location for that Subcontractor. Failure to provide the correct contractor license number as required under the California Public Contract Code may render the Bid nonresponsive. Other information required in Part I may be submitted up to 24 hours after the designated time to submit the Bid to:

San Francisco Bay Area Rapid Transit District
Contract Administration Division
2150 Webster Street, 4th Floor
Oakland, CA 94612
Email: chogan@bart.gov

Attention: Claudia Hogan

10.C.3 The following information required in Parts II through VI: name, address, description of the portion of work or services subcontracted and total dollar amount of subcontracted work or services, shall be submitted with the Bid. Other information required in Parts II through V shall be submitted within five (5) Working Days following the date of Bid opening to:

San Francisco Bay Area Rapid Transit District
Contract Administration Division
2150 Webster Street, 4th Floor
Oakland, CA 94612
Email: chogan@bart.gov

Attention: Claudia Hogan

10.C.4 Pursuant to Labor Code Section 1725.5 and Section 1771.1, all Contractors and Subcontractors shall be registered with the DIR in order to be qualified to bid on this Contract or to be listed as a Subcontractor on any Bid submitted subject to the requirements of Section 4104 of the Public Contract Code, or engage in the performance of work in this Contract. If the Contractor or Subcontractor is a Joint Venture, each of the Joint Venturers as well as the Joint Venture must be separately registered with DIR. An inadvertent error in listing a Subcontractor who is not registered pursuant to State Labor Code Section 1725.5 in a Bid, may be corrected by the Bidder within twenty-four (24) hours after the Bid opening if the Subcontractor registers and pays the penalty registration fee described in State Labor Code Section 1725.5. Alternatively, the Subcontractor may be replaced with a registered Subcontractor pursuant to Section 4107 of the Public Contract Code.

10.C.6 U.S. DOT Bidders List Form: Bidders shall comply with the requirements for 49 CFR Part 26.11(c), by completing the U.S. DOT Bidders List Form and submitting the completed form with the Bid.

10.D Noncollusion Declaration: Bidders shall complete and sign the Noncollusion Declaration contained in the Bid Form.

10.E Fair Employment Practices Certification: Bidders shall complete and sign the Fair Employment Practices Certification contained in the Bid Form.

10.G Bidder's Security: All Bids shall be accompanied by Bidder's Security in an amount not less than ten percent (10%) of the total Bid Price payable to the San Francisco Bay Area Rapid Transit District. The Bidder's Security must be in the form of cash, a cashier's check, a certified check, or a Bidder's bond, or a combination thereof. If a Bidder's bond is furnished, it must conform to the form provided with the Bid Documents, and the surety thereon must be a corporation or corporations acceptable to the District and Authorized to issue surety bonds in the State of California. Bidders' Securities will be held until the Contract has been finally executed, after which all Bidders' Securities except any Bidder's Securities which have been forfeited, will be returned to the respective Bidders whose proposals they accompany, but in no event will Bidders' Securities be held by the District beyond sixty (60) Days from the Award of the Contract.

10.H Statement of Qualifications and Business References for Construction: Bidders shall submit with their Bids a completed Statement of Qualifications and Business References for Construction. A copy of the form is included in the Bid Documents. The District will, to the extent permitted by law, treat the information as confidential, except that parts of it may be discussed with persons and firms referenced by the Bidder. **If the Bidder is a partnership or joint venture, in addition to the form submitted for the Bidder, each general partner/joint venturer shall prepare and submit a separate form.** Extra forms, if needed, can be obtained from the District. If a Bidder is a joint venture, a copy of the executed joint venture agreement shall be attached to the Statement of Qualifications and Business References for Construction. The name of the joint venture in the joint venture agreement shall match the name of the joint venture in the Statement of Qualifications and Business References indicated in the Bid, and other forms and certifications required to be submitted with the Bid. Bids of Bidders with inadequate experience or capacity may be rejected at the discretion of the District. **BIDDERS SHALL SIGN THE STATEMENT OF QUALIFICATIONS AND BUSINESS REFERENCES FORM. FAILURE TO DO SO MAY RESULT IN REJECTION OF THE BID.**

Pursuant to the Statement of Qualifications and Business References submitted by the Bidder in its Bid, Bidder shall inform the District of any identified, perceived, or potential conflicts of interests that may arise during the performance of this Contract with respect to the Bidder or any of its subcontractor. Bidder shall promptly report, in writing on the *District Contractor Conflict of Interest Declaration form*, the fact of the Bidder's interest or connection, and the nature of it, to BART's Internal Audit division and the District's Ethics Officer at conflictofinterest@bart.gov, who will inform the Director of Procurement for the District, or in the case of property development projects to the Director of Real Estate and Property Development for the District.

10.I Buy America Certification: This Contract is subject to the "Buy America" requirements of 49 USC 5323(j), and applicable regulations in 49 CFR Part 661 as may be amended from time to time. Bidders whose Bids exceed $150,000 shall complete and sign the "Buy America" Certificate contained in the Bid Form. In accordance with 49 CFR Part 661.13, failure of Bidder to appropriately execute the "Buy America" Certification will make the Bid non-responsive. **The two signature blocks on the Buy America Certificate(s) are mutually exclusive. Bidder shall sign only one signature block on the Certificate. Signing both signature blocks will make the Bid non-responsive.** Bidder's attention is directed to Supplementary Conditions Article SC7.2.1 which sets forth the "Buy America" requirements.

10.I.1 Federal "Build America, Buy America Act" (BABAA) Compliance: By submitting its Bid, the Bidder certifies that it shall comply with the requirements of the Federal Build America, Buy America Act. Bidder's attention is directed to Supplementary Conditions Article SC7.2.2 which sets forth the "Build America, Buy America Act" requirements.

10.J Debarment Certification: Bidders shall complete and sign the Certification Regarding Debarment contained in the Bid Form and submit it with the Bids. The Certification of all Subcontractors listed in the Designation of Subcontractors and SBEs Form, receiving an amount in excess of $100,000, may be submitted with the Bid, but shall be submitted by the Bidder to the District not later than 2:00 p.m. on Friday of the week following the date of Bid opening. Bidders are advised that failure to submit all such Certifications by the Friday of the week following the date of Bid opening may delay or prevent Award to such Bidder. Following Award, the Certifications of all other proposed Subcontractors or sub-suppliers of any tier receiving an amount in excess of $100,000 shall be submitted by the Contractor to the District Engineer at least fourteen (14) Days before the commencement of the Subcontract work.

Certifications submitted after Bid opening date but prior to Contract Award shall be submitted to:

San Francisco Bay Area Rapid Transit District
Contract Administration Division
2150 Webster Street, 4th Floor
Oakland, CA 94612
Email: chogan@bart.gov

Attention: Claudia Hogan

Email transmissions will be acceptable by the above deadline subject to subsequent receipt of originals by express or U.S. mail, prior to Award.

10.K Lobbying Certification: Bidders shall complete and sign the Certification Regarding Lobbying contained in the Bid Form and submit it with their Bids. The Certification of all Subcontractors listed in the Designation of Subcontractors and SBEs Form, receiving an amount in excess of $100,000, may be submitted with the Bid, but shall be submitted by the Bidder to the District not later than 2:00 p.m. on Friday of the week following the date of Bid opening. Bidders are advised that failure to submit all such Certifications by the Friday of the week following the date of Bid opening may delay or prevent award to such Bidder. Following Award, the Certifications of all other proposed Subcontractors or subsuppliers of any tier receiving an amount in excess of $100,000 shall be submitted by the Contractor to the District Engineer at least fourteen (14) Days before the commencement of the Subcontract work.

Certifications submitted after Bid opening date but prior to Contract Award shall be submitted to:

San Francisco Bay Area Rapid Transit District
Contract Administration Division
2150 Webster Street, 4th Floor
Oakland, CA 94612
Email: chogan@bart.gov

Attention: Claudia Hogan

Email transmissions will be acceptable by the above deadline subject to subsequent receipt of originals by express or U.S. mail, prior to Award.

10.L Financial Contribution Limitations: The Board of Directors of the San Francisco Bay Area Rapid Transit District adopted a Board rule limiting financial contributions to Board members and candidates for Director (Rules of the Board of Directors, Chapter V, Section 5, as amended from time to time, hereinafter referred to as "the Rule"). In regard to any Contract Award requiring authorization by the Board, the Rule prohibits all Bidders and any proposed first-tier Subcontractor or subsupplier whose Subcontract exceeds $100,000, from making any monetary or in-kind contribution (including loans) in excess of $1,000 to a BART Director or any candidate for Director.

For purposes of the Rule, the term "contribution" shall have the same meaning as defined in California Government Code Section 82015 and implementing regulations adopted by the Fair Political Practices Commission.

The Rule shall be effective from the date Bids are opened by the District and continue until the Award of the Contract.

The Rule will continue to apply in regard to the successful Bidder awarded the Contract, and each first tier Subcontractor or subsupplier whose Subcontract exceeds $100,000, for three (3) months following Award.

Bidder shall require each proposed Subcontractor or subsupplier whose Subcontract exceeds $100,000 to comply with the Rule.

Attention is directed to the Bid Form. Bidder, and each proposed first-tier Subcontractor or subsupplier whose Subcontract exceeds $100,000, shall be required to execute the "Certification Regarding Financial Contributions."

Bidder must use its best efforts to collect the Certification from each first-tier Subcontractor or subsupplier whose Subcontract exceeds $100,000 and submit such Certifications along with its own to the District on the Bid date.

10.M Certification Regarding Federal Tax Liability and Recent Felony Convictions: Pursuant to Federal law, if Bidder is a private corporation, partnership, trust, joint-stock company, sole proprietorship, or any other business association, Bidder shall certify that: 1) It has no unpaid Federal tax liability that has been assessed, for which all judicial and administrative remedies have been exhausted or have lapsed, and that is not being paid in a timely manner pursuant to an agreement with the authority responsible for collecting the tax liability; and 2) It has not been convicted of a felony criminal violation under any Federal law within the preceding 24 months. Bidder shall require that the language of this certification be included in all contracts with subcontractors and subsuppliers at all tiers, and that all subcontractors and subsuppliers shall certify and disclose accordingly.

Bidder is advised that all Certifications must be submitted on the Bid date unless there is reasonable cause for delay; however, Bidder is cautioned that unless all Certifications are submitted within five (5) Working Days following the date of Bid Opening, the Bid may be considered non-responsive.

Certifications submitted after Bid due date shall be submitted to:

San Francisco Bay Area Rapid Transit District
Contract Administration Division
2150 Webster Street, 4th Floor
Oakland, CA 94612

Email: chogan@bart.gov

Attention: Claudia Hogan

Email transmission of the Certifications will be acceptable by the above deadline subject to subsequent receipt of originals by express or U.S. mail prior to Award.

Please direct any questions regarding the rule to **Claudia Hogan**, Email: chogan@bart.gov.

10.N Not Used

11. MINIMUM TECHNICAL REQUIREMENTS: The District has established Minimum Technical Requirements which a Bidder must meet for its Technical Qualification Bid to be determined acceptable. The Bidder shall demonstrate, to the District's satisfaction, that it meets or exceeds these requirements and shall submit its responses to the following Minimum Technical Requirements in the format indicated in Paragraph 10.A.1.1 of these Instructions to Bidders. The Bidder's response to the Minimum Technical Requirements will be evaluated on a pass/fail basis as more fully described in Article 19 of these Instructions to Bidders. Notwithstanding a determination that a Bidder appears to meet the Minimum Technical Requirements, should an award be made, Supplier shall be responsible for compliance with all requirements indicated in the contract documents.

11.A Firm Licensing

11.A.1 Certified Qualified Conveyance Company (CQCC) License: The Bidder, or the Bidder's named elevator subcontractor, must hold a current, valid Certified Qualified Conveyance Company (CQCC) License issued by the State of California. The Bidder shall provide a copy of this active state certification with their Qualification Bid.

11.A.2 C-11 Elevator Contractor License: The Bidder, or the Bidder's named elevator subcontractor, must hold a current, valid Class C-11 Elevator Contractor License issued by the State of California Contractors State License Board (CSLB). The Bidder shall provide a copy of this active state license with their Qualification Bid.

11.A.3 C-10 Electrical Contractor License: The Bidder, or the Bidder's named fire protection subcontractor, must hold a current, valid Class C-10 Electrical Contractor License issued by the State of California Contractors State License Board (CSLB). The Bidder shall provide a copy of this active state license with their Qualification Bid.

11.B Firm Experience

11.B.1 The Bidder shall have successfully completed at least two (2) elevator modernization projects with a total contract value of at least $2,000,000 during the last ten (10) calendar years: 2017 - 2026. The Bidder is required to provide sufficient information for each qualifying project, which includes the project name, location, final contract value, completion date, and a narrative description of the scope of work. The Bidder must also provide the name, address, telephone number, and email address of the client's representative who may be contacted for a reference.

11.B.2 At least one (1) of the two projects shall have been performed in an active public facility such as a transit station or airport.

11.B.3 At least one (1) of the two projects shall have been located in the State of California.

11.B.4 Operating Rail Environment: The Bidder, or the Bidder's named elevator subcontractor, must demonstrate experience working within an active, operating rail transit environment. This requirement may be satisfied within the project narratives provided under subparagraph 11.B.1 above, or by providing a separate, additional project reference. If an additional project reference is utilized to satisfy this requirement, the Bidder must provide the same client verification information and narrative scope details as required in subparagraph 11.B.1

11.C Key Project Personnel:

The following categories of labor are designated as key project personnel (whether employed directly by the Bidder, or by a Subcontractor) necessary to complete the Summary of Work. The Bidder shall provide one resume for each of the following who may perform work under this contract.

a. Elevator / Conveyance Project Supervisor / Manager: The proposed Project Supervisor/Manager must have a minimum of two (2) years of supervisory experience in overseeing conveyance and elevator renovation projects, including experience within the last four (4) years.

b. Certified Competent Conveyance Mechanic (CCCM): The proposed CCCM must have at least four (4) years of experience providing elevator renovation and repair services, including experience within the last one (1) year. The Bidder shall provide proof of the CCCM's current CCCM license issued by the State of California.

c. Elevator Adjuster: The proposed Elevator Adjuster must have a minimum of four (4) years of experience in elevator modernization, including experience within the last four (4) years.

d. Fire Protection Systems Specialist: The proposed Fire Protection Systems Specialist must have a minimum of four (4) years of experience in fire protection and fire alarm system installation, maintenance, testing, programming, and commissioning, including experience within the last one (1) year. The Specialist must hold an active Fire/Life Safety Technician Certification issued by the State of California Department of Industrial Relations (DIR) and maintain a current NICET Level II or higher certification in Fire Alarm Systems. The Specialist must have explicit experience with elevator recall and emergency shutdown systems.

12. SUBMITTING BIDS:

12.A Bids shall be submitted in accordance with the Invitation to Bid, and in a minimum of two separate opaque sealed envelopes or containers. Sealed envelopes or containers shall include the name and address of the Bidder and be addressed as follows:

BY HAND DELIVERY:	BY U.S. MAIL:
Office of the District Secretary	Office of the District Secretary

Bay Area Rapid Transit District
BART
2150 Webster Street, 10th Floor
Oakland, CA 94612

Bay Area Rapid Transit District
BART
P.O. Box 12688
Oakland, California 94604-2688

12.B The containers or envelopes shall be clearly marked as follows:

12.B.1 FOR TECHNICAL QUALIFICATION BIDS:

TECHNICAL QUALIFICATION BID FOR CONTRACT NO. 15NL-140
COLISEUM STATION ELEVATOR MODERNIZATION

Date and Time of submission (as indicated in the Invitation to Bid)
Name of Bidder

12.B.2 FOR PRICE BIDS:

PRICE BID FOR CONTRACT NO.15NL-140
COLISEUM STATION ELEVATOR MODERNIZATION

Date and Time of Submission (as indicated in the Invitation to Bid)
Name of Bidder

In no event shall a Technical Qualification Bid be placed in the same envelope with a Price Bid nor shall a Technical Qualification Bid contain any pricing information. Both actions could lead to the premature disclosure of pricing information and may cause a Bid to be rejected. At least five (5) copies each of the Technical Qualification Bid and five (5) copies each of the Price Bid shall be provided.

13. CONFIDENTIALITY OF INFORMATION:

13.A.1 Technical Qualification Bids submitted by Bidders become the exclusive property of the District. The content of any Technical Qualification Bid received, and any other communications between the District and a Bidder, other than proprietary information and other information exempted from disclosure by law, shall be made available to the public at the time of the opening of Price Bids, subject to the District policy regarding Public Records Act requests.

13.A.2 The Prices set forth in a Bidder's Price Bid shall also be available upon the opening of the Price Bid by the District, subject to the District policy regarding Public Records Act requests. Bidders are advised that the District will not consider any information in a Price Bid to be proprietary.

13.B.1 Bidders shall clearly identify all proprietary information in their Technical Qualification Bids. Any questions that Bidders may have with respect to proprietary material should be directed to their own legal counsel.

13.B.2 All material submitted with the Bidder's Technical Qualification Bid under this Invitation to Bid is subject to the California Public Records Act. If a Bidder designates information as proprietary, and there is a Public Records Act request filed with the District seeking disclosure of that information, the Bidder agrees to assist the District in responding to the request by reviewing the documents requested and confirming that the Bidder wishes the District to not make them public. In addition, the Bidder agrees to hold the District harmless and, at the District's option, provide legal defense for the District from all claims and demands including attorney's fees asserted against the District that result from the District

refusing to make public documents the Bidder has designated as proprietary. The Bidder also agrees that, if any action is filed in court seeking disclosure of the information declared proprietary by the Bidder, the District may deposit the documents with the court and the Bidder will defend in court its designation of the information as proprietary.

14. WITHDRAWAL OF BIDS: The Technical Qualification Bid and Price Bid may be withdrawn at any time prior to the time fixed in the Invitation to Bid for the opening of Bids only by filing written request with the District. The request shall be executed by the Bidder or Bidder's representative. The withdrawal of a Bid does not prejudice the right of the Bidder to file a new Bid. Bids received after the time fixed in the Invitation to Bid for opening of Bids will not be considered nor may any Bid be withdrawn after that time except as provided in Paragraph 19 of these Instructions to Bidders.

15. PUBLIC ANNOUNCEMENT OF RECEIPT AND OPENING OF BIDS: The receipt of both Technical Qualification Bids and Price Bids will be publicly announced at the time and place stated in the Invitation to Bid. Bidders are invited to be present. The time and place for the public opening of Price Bids will be as set forth in Article 19.B.1 of these Instructions to Bidders.

16. DISQUALIFICATION OF BIDDERS: More than one Bid from an individual, firm, partnership, corporation, or combination thereof under the same or different names will not be considered. Reasonable grounds for believing that any individual, firm, partnership, corporation, or combination thereof is interested as a principal in more than one Bid for the work contemplated may cause the rejection of all Bids in which such individual, firm, partnership, corporation, or combination thereof is interested. Bidders submitting a Bid as a joint venture shall submit a copy of the executed joint venture agreement with their Technical Qualification Bid.

A Bid may be rejected if Bidder fails to comply with the District's SBE requirements.

17. IRREGULAR BIDS:

17.A IRREGULAR TECHNICAL QUALIFICATION BIDS. Bids may be rejected if they show such items as: alteration of form; addition not called for; conditional Bids; incomplete Bids; irregularities which make the Bids incomplete, indefinite, or ambiguous; improper markings and identifications; unacceptable Bid Security; or a signature other than an authorized person. In the event a Technical Qualification Bid is submitted with materials containing price information, the District, in its sole discretion, may notify the Bidder and allow the Bidder under the supervision of the District to remove this information from the Technical Qualification Bid.

17.B IRREGULAR PRICE BIDS: Bids may be rejected if they show such items as: alteration of form; additions not called for; conditional Bids; incomplete Bids; irregularities which make the Bids incomplete, indefinite, or ambiguous; improper markings and identifications; obviously unbalanced prices; or a signature by other than an authorized person.

18. RELIEF OF BIDDERS: A Bidder shall not be relieved of the Bid unless the District consents nor shall any change be made in the Bid because of mistake, but, in accordance with Section 5100 et seq. of the California Public Contract Code, the Bidder may bring an action against the District in a court of competent jurisdiction in the county in which the Bids were opened for the recovery of the amount forfeited without interest or cost. If the plaintiff fails to recover judgment, the plaintiff shall pay all costs incurred by the public entity in the suit, including a reasonable attorneys' fee to be fixed by the court. The Bidder is cautioned that, pursuant to California Public Contract Code Section 5105, a Bidder who claims a mistake or who forfeits its Bidder's Security shall be prohibited from participating in further Bidding on the project in which the mistake was claimed or security forfeited.

If a mistake is made, it shall be the responsibility of the Bidder to give the District a written notice of the mistake within five (5) Working Days, excluding Saturdays, Sundays, and state holidays, after opening of the Bids. The notice shall specify in detail how the mistake occurred.

19. EVALUATION AND AWARD: Bids will be evaluated by a Selection Committee composed of District staff, as well as other participants that BART may deem appropriate. Bids will be evaluated in two steps as follows:

19.A Technical Qualification Bid Evaluation:

19.A.1 The Selection Committee will first make a preliminary determination of the responsiveness of the Bid and the responsibility of the Bidder. A determination of responsiveness to certain requirements e.g., compliance with Nondiscrimination Program of Subcontracting, may not be capable of being made until Price Bids are opened. A Bid will be considered responsive only if it complies in all material respects to the requirements of the Contract Documents. A Bidder will be considered responsible only if it has, or has indicated that it can obtain, the financial resources to successfully fulfill the requirements of an awarded Contract and the Bidder possesses the ability to perform successfully under the terms and conditions of an awarded Contract. If a Bid is determined to be non-responsive or a Bidder is determined to be non-responsible for the purposes of this Contract, such Bid or Bidder will not be considered further for award. The District may reserve the final decision as to responsiveness and responsibility of the low Bidder after opening the Price Bids in Step Two.

19.A.1.a The Selection Committee will determine if the required Technical Qualification Bid Documents, with the exception of the Bidder's security, have been submitted and will review those documents to determine if they meet the requirements indicated therein. All information submitted by Bidders is subject to verification by the Selection Committee. Any information which cannot be verified, after the Selection Committee has made reasonable efforts, shall not be considered as part of Technical Qualification Bid evaluation.

District staff, other than the Selection Committee, will determine whether each Bidder has submitted the required Bidder’s security and if each Bidder meets the requirements of the Contract Documents. Such staff shall make their determination known to the Selection Committee.

19.A.1.b The Selection Committee will evaluate the responses to the Minimum Technical Qualification Requirements submitted as part of a Bidder's Technical Qualification on pass/fail basis. The responses submitted must meet each and every item of the District's Minimum Technical Requirements in order to be acceptable.

19.A.2 The Selection Committee will categorize Technical Qualification Bids as being acceptable, potentially acceptable or unacceptable. To clarify Technical Qualification Bids, the District may request additional information from and/or hold discussions with Bidders having a reasonable chance of demonstrating that they meet the minimum Technical Qualification requirements. If a Technical Qualification Bid is determined to be unacceptable, either initially or after clarifications or discussions, such Bids will not be considered further for award.

19.A.3 Those Bidders submitting Technical Qualification Bids, which appear to be acceptable pending the opening of Price Bids, will be notified by certified mail of the results of their evaluation. This Notice of Evaluation will only indicate whether the Technical Qualification Bids were either acceptable or unacceptable. This notice will also announce the time and place of the Price Bid opening. Those Bidders who submitted unacceptable Technical Qualification Bids will be notified that their Bids are no longer under evaluation and will not be considered further for award. Bidders whose bids are determined to be non-responsive will be informed of the basis with the Notice of Intent to Award. This notice will be transmitted to the Bidder at the address contained in its Bid Form by such means as will provide verification of time of receipt.

19.B Price Bid Opening:

19.B.1 Price Bids will be opened publicly and publicly announced at the time and place indicated in the Notice of Evaluation. Only the Price Bids of those Bidders who have submitted a Technical Qualification Bid and whose Technical Qualification Bid has been determined to be acceptable by the District will be opened. All other Price Bids received will remain sealed and kept secured until after the Contract has been awarded, at which time they will be returned to the respective Bidders.

19.C Price Bid Evaluation and Award:

19.C.1 The District reserves, in its sole discretion, the right to reject any and all Bids and to waive informalities and minor irregularities in Bids received, other provisions in the Contract Documents notwithstanding. Award of this Contract is subject, in part, to the availability of funding. This Invitation to Bid does not commit the District to award a Contract or to pay any costs incurred in the preparation or submittal of a Bid.

19.C.2 Award of the Contract, if it be awarded, will be to the lowest responsible Bidder whose Bid complies with the requirements prescribed and whose qualifications are satisfactory to the District. Any such award will be made pursuant to a Notice of Award signed by the General Manager, or authorized representative, within one hundred eighty (180) Days after the opening of the Bids and, if necessary, the period of time specified may be extended by written agreement between the District, by and through its General Manager, or authorized representative, and the Bidder or Bidders concerned. Award of the Contract will occur when a written Notice of Award, signed by the District's General Manager, or authorized representative, is placed in the mail or otherwise transmitted to a Bidder.

19.D Evaluation: Bids will be evaluated by the District on the basis of the total Bid Price, which is the sum of the individual item total prices bid as set forth in the Bid Schedule, for the purpose of determining the lowest responsive Bid. The item totals for all Bid Items are provided by the Bidder for the convenience of the District. In the event where the Bid Unit Price and the item total are entered, and there is a discrepancy between the Bid Unit Price and the amount entered in the item total column, the Bid Unit Price shall govern. However, if the Unit Price is not entered but the item total is provided, then the District will calculate the Unit Price by dividing the item total by the estimated quantity for that Bid Item. Conversely if the item total is not entered but Unit Price is provided, then the District will calculate the Item Total by multiplying the estimated quantity by the Unit Price. The District will calculate the total Bid Price based on the Unit Prices or lump sum prices bid, as applicable. In the event of a discrepancy between the District's calculations and the item totals for all Bid Items as submitted by the Bidder, the District's calculations shall govern.

19.E Time of Award: Award of the Contract, if it be awarded, will be to the lowest responsible Bidder whose Bid complies with the requirements prescribed and whose qualifications are satisfactory to the District. Any such Award will be made pursuant to a Notice of Award signed by the District's General Manager, or Authorized representative, within one hundred eighty (180) Days after the date on which the Bids are opened. If necessary, the period of time specified may be extended by written agreement between the District, by and through its General Manager, or authorized representative, and the Bidder or Bidders concerned. If such an extension is agreed to, the Bidder or Bidders concerned shall, as necessary, extend the effective date of the Bidder's Security so that it remains in full force and effect during the extension period. Award of the Contract will occur on the date when a written Notice of Award, signed by the District's General Manager, or authorized representative, is placed in the mail or otherwise transmitted to a Bidder.

20. DISTRICT CONTRACTOR CODE OF CONDUCT: All Bidders shall comply with the requirements of the District Contractor Code of Conduct which has been adopted by the Board of Directors of the San Francisco Bay Area Rapid Transit District. This Code of Conduct is posted at the District's website: **www.bart.gov/about/business/procurement/**. The purpose of the District Contractor Code of Conduct is to protect the integrity of the procurement process, and to provide a comprehensive statement of pertinent regulations and obligations governing the conduct of Contractors and their Subcontractors doing business with the District so they will be able to compete fairly and perform their work and services in an ethical manner.

21. EXECUTION OF CONTRACT: The Bidder to whom an Award is made shall execute the Contract and furnish the required Performance and Payment Bonds and furnish specified Certificates of Insurance within ten (10) Days after being given notice of the Award unless the District, in its discretion, allows additional time in writing for such submissions. Execution of the Contract, requirements for bonds, and insurance requirements are specified in General Conditions, Articles GC2, Bonds and Insurance, and GC3, Execution of Contract.

END OF INSTRUCTIONS TO BIDDERS

GENERAL CONDITIONS

Bidders to review and comply with the terms of the District's Construction General Terms and Conditions located at the following link:

https://www.bart.gov/about/business

SUPPLEMENTARY CONDITIONS

TABLE OF CONTENTS

ARTICLE NO.	PAGE NO.
ARTICLE SC1 - ABBREVIATIONS, DEFINITIONS, AND GENERAL TERMS	**1**
SC1.1 Definitions	1
SC1.1.1 Engineer	1
SC1.1.2 Record (“As-Built”) Drawings	1
SC1.1.3 Standard Specifications	1
SC1.1.4 Unit Price Work	1
SC1.1.5 Working Days	1
ARTICLE SC2 - BONDS AND INSURANCE	**1**
SC2.1 Contract Bonds	1
SC2.1 .1 Term of Bonds	1
SC2.2 Insurance	1
SC2.2.1 Contractor Furnished Insurance	1
SC2.2.2 Evidence Required	1
SC2.2.3 Notice of Cancellation, Renewal, Reduction or Material Change in Coverage	2
SC2.2.4 Qualifying Insurers	2
SC2.2.5 Insurance Required	2
SC2.2.6 Special Provisions	4
ARTICLE SC3 - EXECUTION OF CONTRACT	**4**
SC3.1 Execution	5
SC3.2 Workers’ Compensation	5
ARTICLE SC4 - SCOPE OF WORK	**5**
SC4.1 Changes	5
SC4.2 Cancellation	5
SC4.3 Guaranty of Work	5
SC4.4 Ownership of Work Products	6
ARTICLE SC5 - CONTROL OF WORK	**6**
SC5.1 Contract Documents	7
SC5.2 Contract Drawings and Reference Drawings	7
SC5.3 Subcontracting	7
SC5.3.1 Contractor’s Work Percentage	7
SC5.4 Requirement for Designation	7
SC5.5 Correspondence	7
ARTICLE SC6 - CONTROL OF MATERIALS	**7**
SC6.1 Property Rights in Materials	7
ARTICLE SC7 - COMPLIANCE AND LIABILITY	**8**
SC7.1 Disadvantaged Business Enterprise and Small Business Entity Participation	8
SC7.1.1 Definitions	8

SUPPLEMENTARY CONDITIONS

TABLE OF CONTENTS

ARTICLE NO. **PAGE NO.**

SC7.1.2 No DBE Participation Goal 9
SC7.1.3 SBE Participation Not Used. 9
SC7.1.3.1 SBE Information Not Used. 9
SC7.1.3.2 Good Faith Efforts To Meet SBE Goals 9
SC7.1.5 Change Orders 9
SC7.1.6 SBE Records 9
SC7.1.7 Participation in SBE Programs 9
SC7.1.8 Discrimination Prohibited 9
SC7.1.9.2 Good Faith Efforts Regarding Substitution of SBEs 9
SC7.1.9.3 Good Faith Efforts Assessment 9
SC7.1.10 Section 1773 of the State Labor Code 9
SC7.1.10.1 Section 1777.5 of the State Labor Code, Apprentices 10
The Contractor and all Subcontractors shall comply with all applicable requirements of California Labor Code Section 1777.5 which, among other things, requires that only registered apprentices, as defined by Labor Code Section 3077, can be employed at the apprentice wage rate on public works. 10
SC7.1.11 Posting of DIR Posters 10
SC7.1.12 Ombudsperson 10
SC7.1.13 Electronic Submittal of Payroll Records 10
SC7.1.14 Worker Daily Sign-in and Sign-out Process 11
SC7.2 Buy America Certification 11
SC7.2.1 Buy America Requirements 11
SC7.2.2 Build America, Buy America Act 12
SC7.3 Payroll Records 12
SC7.3.1 Registration with State DIR 13
SC7.3.2 Certified Payroll Records Submittal to State DIR 13
SC7.4 Safety and First Aid Requirements 13
SC7.4.1 Safety Reports 13
SC7.5 Financial Contributions Limitation 13
SC7.6 District Contractor Code of Conduct 13
SC7.7 Construction General Permit 13
SC7.8 District's Environmental Policy 13
SC7.9.2 Not Used. 14
SC7.11 Iran Contracting Act of 2010. 14
SC7.12 U.S. Government's Economic Sanctions on Russia and Belarus, EO N-6-22. 14
SC7.13 California Air Resources Board Advanced Clean Fleets Compliance. 14
ARTICLE SC8 - PROSECUTION AND PROGRESS 14
SC8.1 Time(s) of Completion 14

SUPPLEMENTARY CONDITIONS

TABLE OF CONTENTS

ARTICLE NO. **PAGE NO.**

SC8.1.1 Commencement of Work 14
SC8.1.2 District's Right to Full Duration Contract 14
SC8.2 Liquidated Damages 14
SC8.2.1. Incentive Bonus 14
SC8.2.2 Delays 16
SC8.3 Partnering 16
SC8.3.1 District Partnering Policy 16
SC8.3.2 Partnering Goals 17
SC8.3.3 Contract Rights 17
SC8.3.4 Allowance 17
SC8.3.5 Subcontractor Participation in Partnering 17
SC8.4.4.4 Suspension of Work Due to Investigation or Audit. 17
SC8.4.4.5 Inefficiency Claims. 17
SC8.8 Termination for Contractor's Default. 17
ARTICLE SC9 - PAYMENT, RECORDS, AND CLAIMS 18
SC9.1 Prompt Payment 18
SC9.2 Labor 18
SC9.3 Notice of Potential Claim 18
SC9.4 District Review of Notice of Potential Claim 18
SC9.5 Deferral of Legal Action 19
SC9.6 Retention 19
SC9.7 Subcontractor Payments 19
SC9.7.1 Subcontractor Payment Tracking System Reporting Requirements 20
SC9.7.3 Payment Waivers. 21
SC9.8 Two-Party Transactions 21
SC9.9 Final Invoices 21
SC9.9.1 Withholding of Unpaid Claims. 22
SC9.10 Notices 22
SC9.10.1 Stop Payment Notices and Related Correspondences. 22
"GC9.8.3.1. Stop Payment Notices and Related Correspondences. 22
ATTACHMENT SC9.1 ARTICLE 1.7 23
ATTACHMENT SC9.3 ARTICLE 1.5 24
ATTACHMENT SC9.4 Claims and Disputes 27
ARTICLE SC10 - DEPARTMENT OF TRANSPORTATION REQUIREMENTS 30
SC10.1 Definitions 30
SC10.2 Compliance to Federal, State, Local Laws, Regulations and FTA Directives 30
SC10.3 No Federal Government Obligations to Contractor and Third Parties 30

SUPPLEMENTARY CONDITIONS

TABLE OF CONTENTS

ARTICLE NO. PAGE NO.

SC10.4 Support for Contract Costs 30
SC10.5 Project Identification 30
SC10.5.1 DOT Construction Signs 30
SC10.6 Inspection 30
SC10.7 False or Fraudulent Statements and Claims 30
SC10.7.1 Fraud, Waste Or Abuse Notification. 31
SC10.8 Exclusionary or Discriminatory Specifications 31
SC10.9 Not Used 31
SC10.10 Geographic Restrictions 31
SC10.11 DOT Labor Requirements 31
SC10.11.1 Davis-Bacon Act, as amended 31
SC10.11.2 Minimum Wages 32
SC10.11.3 Withholding 33
SC10.11.4 Payrolls and Basic Records 33
SC10.11.5 Apprentices and Trainees 34
SC10.11.6 Contract Work Hours and Safety Standards Act, as amended 35
SC10.11.7 Compliance with Copeland Act Requirements 36
SC10.11.8 Contract Termination: Debarment 36
SC10.11.9 Compliance with Davis-Bacon and Related Act Requirements 36
SC10.11.10 Fair Labor Standards 36
SC10.11.11 Disputes Concerning Labor Standards 36
SC10.11.12 Certification of Eligibility 36
SC10.11.13 Overtime Requirements 37
SC10.11.14 Violation: Liability for Unpaid Wages; Liquidated Damages 37
SC10.11.15 Withholding for Unpaid Wages and Liquidated Damages 37
SC10.11.16 Notice to the District of Labor Disputes 37
SC10.12 Subcontracts 37
SC10.13 How Contract Affected by Provisions Held Invalid 37
SC10.14 Reporting, Record Retention and Access 37
SC10.15 Debarment and Suspension 38
SC10.16 Buy America 38
SC10.17 Fly America 38
SC10.18 Environmental Protection 38
SC 10.18.1 Procurement of Recovered Materials 39
SC10.19 Air Quality 39
SC10.20 Clean Water 39
SC10.21 Disadvantaged Business Enterprise and Small Business Entity 39

SUPPLEMENTARY CONDITIONS

TABLE OF CONTENTS

ARTICLE NO. PAGE NO.

SC10.22 Cargo Preference - Use of United States Flag Vessels 39
SC10.23 Patent Rights 40
SC10.24 Rights in Data and Copyrights 40
SC10.25 Certification Regarding Lobbying 41
SC10.26 Energy Conservation 41
SC10.27 Americans with Disabilities Act 41
SC10.28 Preference for Recycled Products 43
SC10.29 Equal Employment Opportunity 43
SC10.30 Civil Rights 43
SC10.31 Seismic Safety 44
SC10.32 Metric System 44
SC10.33 Privacy 44
SC10.34 Veterans Employment 44
SC10.35 Prohibition on Certain Telecommunications and Video Surveillance Services or Equipment 44
SC10.36 Seat Belt Use. 45
SC10.37 Distracted Driving, Including Text Messaging While Driving. 45
SC10.38 Federal Tax Liability and Recent Felony Convictions 46
SC10.39 Trafficking In Persons 46
SC10.40 Alcohol Misuse and Prohibited Drug Use. 46
SC10.41 Motor Carrier Safety 46

END OF TABLE OF CONTENTS

SUPPLEMENTARY CONDITIONS

The provisions of the preceding "General Conditions for Construction Contracts" shall apply except as modified and supplemented by these Supplementary Conditions.

ARTICLE SC1 - ABBREVIATIONS, DEFINITIONS, AND GENERAL TERMS

SC1.1 Definitions General Conditions Article GC1.3 is modified as follows:

SC1.1.1 Engineer Add the following for the definition for "Engineer":

"As referred to in the Contract Documents, the Engineer will be the representative designated by the District."

SC1.1.2 Record ("As-Built") Drawings Delete the definition of Record Drawings and replace with the following:

"Drawings submitted by a Contractor or Subcontractor at any tier incorporating all changes to or deviations from the Contract Drawings showing the Work as actually completed under the Contract."

SC1.1.3 Standard Specifications Delete the definition of Standard Specifications and replace with the following:

"BART Facilities Standards, Standard Specifications, Release – R3.1.2. dated April 2018", which specifications are applicable to the Work to the extent referenced in the Contract Specifications."

SC1.1.4 Unit Price Work Add the following for the definition for "Unit Price Work":

"Work to be paid for on the basis of unit prices."

SC1.1.5 Working Days Add the following for the definition for "Working Days":

"All Days except weekends (Saturdays and Sundays) and District holidays."

ARTICLE SC2 - BONDS AND INSURANCE

SC2.1 Contract Bonds In General Conditions Article GC2.1, delete the terms "6 USC 6-13" and replace with "31 USC Sections 9304-9308"

SC2.1 .1 Term of Bonds In the second sentence General Conditions Article GC 2.1.2, delete the terms "3249" and replace with "9502".

SC2.2 Insurance General Conditions Article GC2.2 is supplemented by the following:

SC2.2.1 Contractor Furnished Insurance From the date of execution of this Contract to Acceptance of the Work covered by this Contract, or as may be further required by the Contract, the Contractor, at its own cost and expense, shall provide the insurance specified in this Supplementary Conditions Article SC2.2.

SC2.2.2 Evidence Required At or before execution of this Contract and at such other times as the District may request, the Contractor shall provide the District with Certificate(s) of Insurance executed by authorized representatives of the insurer(s) evidencing that the Contractor's insurance complies with this Supplementary Conditions Article SC2.2. The Certificate(s) shall reference the District's Contract number and title to which the certificate(s) apply. In addition, copies of all required endorsements shall be attached to and form part of Contractor's Certificate(s) of Insurance.

The Certificate Holder should be addressed to the following:

San Francisco Bay Area Rapid Transit District
Risk Management and Insurance – BHQ09
P.O. Box 12688
Oakland, California 94604-2688

SC2.2.3 Notice of Cancellation, Renewal, Reduction or Material Change in Coverage All policies shall be endorsed to provide the District with thirty (30) Days prior written notice of any cancellation, reduction, or material change in coverage. Notice shall be sent to the Director of Risk and Insurance Management, San Francisco Bay Area Rapid Transit District, P.O. Box 12688, Oakland, CA 94604-2688. The Contractor shall annually submit to the District's Director of Risk and Insurance Management, certifications confirming that the insurance required has been renewed and continues in place.

SC2.2.4 Qualifying Insurers All policies shall be issued by California admitted companies which hold a current policyholders alphabetic and financial size rating of not less than **AVIII** according to Best's Insurance Reports.

SC2.2.5 Insurance Required

A. Insurance required by this Supplementary Conditions Article SC2.2 shall apply to:

1. Contractor's operations away from the Jobsite.
2. Contractor's operation at the Jobsite.

B. Commercial General Liability Insurance: Commercial General Liability Insurance for bodily injury (including death), personal injury and property damage which provides limits of not less than Two Million Dollars (2,000,000) per occurrence and Four Million Dollars ($4,000,000) annual aggregate, as respects products/completed operations.

1. Coverage shall include:

a. Premises and Operations;
b. Broad Form Property Damage;
c. Per Project Aggregate;
d. Products/Completed Operations;
e. Contractual Liability, expressly including liability assumed under this Contract;
f. Personal Injury Liability;
g. Independent Contractors' Liability;
h. Cross Liability and Severability of Interest; and
i. Explosion, Collapse, and Underground (XCU).

2. Such insurance shall include the following endorsements, copies of which shall be provided to the District:

a. Inclusion of the District, its directors, officers, representatives, agents and employees as additional insureds as respects the Contractor's operations in connection with this Contract,

b. Stipulation that this insurance is primary insurance and that no insurance or self-insurance of the District will be called upon to contribute to a loss, and.

c. Waiver of Subrogation Endorsement in favor of the District, its directors, officers, representatives, agents and employees.

3. For all applications involving work within 50 feet, vertically or horizontally, of BART trackway or affecting any BART bridge or trestle, tracks, roadbeds, tunnel, underpass or crossing, the General Liability Insurance must not exclude coverage therein

C. Automobile Liability Insurance: Automobile Liability Insurance for bodily injury (including death) and property damage with limits of liability not less than One Million Dollars ($1,000,000) combined single limit per occurrence applicable to all owned, non-owned, and hired vehicles.

1. Coverage shall be endorsed to include the following:
a. Inclusion of the District, its directors, officers, representatives, agents and employees as additional insureds as respects services or operations in connection with this Agreement.

2. With respect to the removal and transport of hazardous material or hazard-containing material, the policy shall include:

   a. Coverage for the accidental release of hazardous waste defined in California Health and Safety Code (H & S) Section 25117 and listed in California Administrative Code Title 22 Society Security, Division 4.5, Environmental Health Section 66261 and consequential containment, cleanup, disposal and penalties associated therewith.

   b. Pollution Liability - Broadened coverage for covered autos which includes "covered pollution costs or expenses," which mean any cost or expense arising out of:

      (1) Any request, demand or order; or

      (2) Any claim or suit by or on behalf of a governmental authority demanding that the insured or others test for, monitor, clean-up, remove, contain, treat, detoxify, or neutralize, or in any way respond to, or assess the effects of pollutants.

D. Workers' Compensation/ Employers' Liability Insurance. Statutory Workers' Compensation and Employers' Liability Insurance for not less than One Million Dollars ($1,000,000) per accident applicable to Employers' Liability coverage for all employees engaged in services or operations under this Contract. The policy shall include Broad Form All States/Other States coverage. Coverage shall be specifically endorsed to include the insurer's waiver of subrogation in favor of the District, its directors, officers, representatives, agents and employees, a copy of which shall be provided to the District. Should any such work be subcontracted, the Contractor shall require each Subcontractor of any tier similarly to comply with this Article, all in strict compliance with Federal and State law.

E. Umbrella/Excess Liability Insurance for not less than Five Million Dollars ($5,000,000) per occurrence and aggregate. This insurance shall follow form to the Commercial General Liability, Automobile Liability, and Employer's Liability policies and "drop down" for defense and indemnity in the event of exhaustion of the underlying insurance. For Excluded Parties only, these limits shall apply on a "per project" basis for excess commercial general liability.

F. Contractors Pollution Liability Insurance for bodily injury (including death), property damage and remediation which provides limits of not less than One Million Dollars ($1,000,000) per occurrence. If contractor or any of its subcontractors perform asbestos or other toxic or hazardous materials, remediation, removal, abatement, storage, transportation or disposal work including, without limitation, related demolition work.

   1. Such policies shall be for a term not less than (one) year on an "Occurrence" basis and any aggregate applicable to such policies shall be dedicated to work performed by CONTRACTOR and/or subcontractors on behalf of BART. In addition, such policies shall include, without limitation, and as applicable:

      a. Bodily Injury and Defense Coverage for asbestos (if there is exposure)
      b. Bodily Injury and Defense Coverage for lead (if there is exposure)
      c. Bodily Injury and Defense Coverage for microbial matter (if there is exposure)
      d. property damage, to include Natural Resource Damage Claims
      e. a statement that such insurance is primary and over any surety contracts or bonds covering the Work if any;
      f. coverage for products brought onto the Property where operations are being performed
      g. Inclusion of the San Francisco Bay Area Rapid Transit District, its directors, officers, representatives, agents, and employees as additional insureds as respects work or operations performed under this Agreement;
      h. Coverage for pollution incidents related to transported cargo/waste to and from job site {See Section SC.2.2.5.C.2]

i. Coverage for claims for bodily injury, property damage or remediation costs related to pollution conditions at disposal sites which have received waste transported from the project site

j. A waiver of subrogation provision against the San Francisco Bay Area Rapid Transit District, its directors, officers, representatives, agents, and employees

G. Professional Liability Insurance for damages arising out of CONTRACTOR's acts, errors or omissions. The policy shall provide a coverage limit of not less than Two Million Dollars ($2,000,000) per claim/aggregate as respects CONTRACTOR's services under this Agreement. Such insurance shall be maintained for a period of not less than two (2) years following completion of services.

H. Railroad Protective Liability Insurance for bodily injury (including death), property damage, and physical damage, including loss of use thereof, to railroad property with limits of not less than Two Million Dollars ($2,000,000) per occurrence and Six Million Dollars ($6,000,000) in the aggregate annually, applicable to all operations of the Contractor and its Subcontractor(s), within fifty (50) feet, vertically or horizontally, of BART's trackway. BART shall have the right to approve the policy wording. The named insured shall be San Francisco Bay Area Rapid Transit District. Prior to commencing work or entering BART property, Contractor shall file the original copy of the policy with BART's Department Manager, Risk and Insurance. This coverage shall be maintained for the term of this Contract.

I. Builders' Risk/Course of Construction Insurance. Builders' Risk Insurance provided on an "All-Risk" basis excluding earthquake for the full replacement cost of materials, supplies, all property to be incorporated into the finished work, and completed work in an amount not less than the full completed value of the covered structure or the replacement value of alterations or additions. BART shall be named as a loss payee and losses will be payable to both Contractor and BART, as their interests may appear.

J. Contractor's Equipment Insurance for tools and equipment owned, leased or rented and used by the Contractor or Subcontractors in the performance of the Scope. Coverage shall extend to equipment stored off the Project site or in transit to the Project site. Coverage is to be provided on an "All-Risk" basis excluding Earthquake for the full replacement cost of all equipment.

SC2.2.6 Special Provisions

A. The foregoing requirements as to the types and limits of insurance coverage to be maintained by the Contractor, and any approval of said insurance by the District is not intended to and shall not in any manner limit or qualify the liabilities and obligations otherwise assumed by the Contractor pursuant to this Contract, including but not limited to the provisions concerning indemnification.

B. The District acknowledges that some insurance requirements contained in this Supplementary Conditions Article SC2.2 may be fulfilled by a funded self-insurance program of the Contractor. However, this shall not in any way limit liabilities assumed by the Contractor under this Contract. Any self-insurance program must be approved in writing by the District.

C. Should any of the work under this Contract be subcontracted, the Contractor shall require each of its Subcontractors of any tier to provide the aforementioned coverages, or the Contractor may insure Subcontractor(s) under its own policies.

D. The District reserves the right to withhold payments to the Contractor in the event of material noncompliance with the insurance requirements of this Supplementary Conditions Article SC2.2.

E. The District reserves the right to terminate this Contract in the event of material noncompliance with the insurance requirements of this Supplementary Conditions Article SC2.2."

ARTICLE SC3 - EXECUTION OF CONTRACT

SUPPLEMENTARY CONDITIONS

SC3.1 Execution Delete the first sentence of General Conditions Article GC3.1 and replace with the following:

"Within ten (10) Days following the receipt of a Notice of Award, unless the District, in its discretion, allows additional time in writing for such submissions, the Contractor shall deliver to the district the Payment Bond and the Performance Bond and furnish specified Certificates of Insurance and shall properly execute three (3) copies of the Contract at the offices of the District."

SC3.2 Workers' Compensation General Conditions Article GC3.1.1, Workers' Compensation, is supplemented by the provisions of Supplementary Conditions Article SC2.2.

ARTICLE SC4 - SCOPE OF WORK

SC4.1 Changes General Conditions Article GC4.2 is supplemented by adding the following to the end thereof:

"(a) Options. The Contractor shall perform work and furnish material and equipment therefore upon receipt of a unilateral Change Order issued by the District to exercise its Option(s) as described in the Contract Documents. Such work shall not be designated as extra work"

SC4.2 Cancellation Delete General Conditions Article GC4.2.5 in its entirety.

SC4.3 Guaranty of Work Add the following to General Conditions Article GC4.9:

"**GC4.9.4 Warranty of Contractor Installed Equipment and Materials.** Notwithstanding the guaranty provisions previously specified and except where longer periods of warranty are otherwise identified in the Contract Documents, the Contractor warrants that all equipment, materials, and labor furnished or performed to install such equipment under the Contract shall be satisfactory for their intended purposes and shall be free of all defects in the design, materials, and workmanship for a period of two (2) years from and after Acceptance, regardless of whether the same were furnished or performed by the Contractor or by any of its Subcontractors. Upon receipt of written notice from the District of any defect in any such equipment, materials, or labor during the applicable warranty period due to defective design, equipment, materials, or workmanship, the affected item or part thereof shall be redesigned, repaired, or replaced within a time period and in a manner acceptable to the District."

"**GC4.9.5 Testing.** The Contractor shall perform such tests as the District may require to verify that such redesign, repairs, and replacements comply with the requirements of the Contract Documents. The Contractor shall bear all costs associated with such redesign, repair, replacement, and testing; including the removal, replacement, and reinstallation of equipment and materials necessary to gain access. The Contractor warrants such redesigned, repaired, or replaced work against defective design, materials, and workmanship for the remainder of the warranty period, or for a period of one year from and after the date of Acceptance thereof, whichever occurs later. Should the Contractor fail to promptly make the necessary redesign, repair, replacement, and test, the District may perform or cause to be performed the same at the Contractor's expense."

"**GC4.9.6 Use of District's Facilities.** Contractor personnel will be entitled to use District facilities and special equipment to perform warranty work, provided that such work is conducted during normal hours, does not interfere with other District activities, and is performed in accordance with District policies and directions. Damages to District property caused by Contractor representative shall be the sole responsibility of the Contractor, and shall be corrected at the Contractor's expense."

"**GC4.9.7 Liability.** The Contractor and its surety or sureties shall be liable for the satisfaction and full performance of the warranties as set forth herein."

"**GC4.9.8 Guarantee/Warranty.** Whenever the words "guaranty" or "guarantee" appear in this Contract they shall mean "warranty" or "warranties" and vice versa as if so written."

"**GC4.9.9 Warranty Period.**

(a) When warranties of a greater duration than required herein are provided by original equipment manufacturers or others at no additional cost, the Contractor shall ensure that the warranty is transferable to the District and shall transfer the warranty to the District.

(b) The warranty period for spare parts shall extend for three (3) years after Acceptance.

(c) The warranty period for test equipment and special tools shall extend for three (3) years after Acceptance.

(d) The warranty period for each part supplied to replace a defective part under this warranty shall be for the remainder of the warranty period on the part replaced, or for one year after the replacement part is installed, whichever occurs last.

(e) Failure of any equipment to meet the reliability requirements during Reliability Demonstration Tests shall be the responsibility of the Contractor. If corrections or modifications required, such corrections or modifications shall be made to all affected equipment at no cost to the District."

SC4.4 Ownership of Work Products Delete General Conditions Article GC4.12 in its entirety and replace with the following:

"GC4.12 Work Products. Work Products shall mean all Record Documents, Record Drawings, Shop Drawings, other drawings, designs, specifications, manuals, reports, studies, surveys, models, software (including source code and object code), and any other documents, materials, deliverables, data and products prepared or developed by Contractor or its Subcontractors or Suppliers in connection with the Work performed pursuant to this Contract, whether or not such products are required to be delivered to the District, and including without limitation any such products required for maintaining the Materials or completed Work.

GC4.12.1 Ownership of Work Products. All Work Products shall be the property of the District. Within thirty (30) Days after issuance of the Certificate of Substantial Completion in accordance with Article GC8.3.2, or an earlier termination of this Contract, Contractor shall provide the District with a list of all Work Products which have not previously been furnished to the District. Within thirty (30) Days, the District shall advise Contractor which such Work Products it requires, and Contractor shall promptly deliver them to the District. Contractor shall be responsible for the preservation of any and all Work Products prior to transmittal to the District; and Contractor shall replace any such Work Products as are lost, destroyed or damaged while in its possession without additional cost to the District.

GC4.12.2 License to Use Intellectual Property. Contractor hereby grants to the District the perpetual, worldwide right and license to use and exploit the intellectual property comprising the Work Products, including, but not limited to, the unlimited right to exercise all rights under copyright, patent, trademark and trade dress laws. Contractor acknowledges the District's unlimited rights to reproduce, publish, display, create derivative works from, sell, transfer or otherwise exploit ("Use"), and permit others to Use all or any part of the Work Products, and to obtain and hold in its own name patents, copyright and/or trademark registrations for any derivative works created by the District based on the Work Products. Contractor shall provide all documentation, information and assistance reasonably required by the District to exercise the license granted herein, including without exception all information and code necessary to fully access and create derivative works based on software, and to obtain registrations or patents for derivative works.

GC4.12.3 Intellectual Property Warranties and Indemnification. Contractor warrants and represents (a) that the Work Products and any third party materials that are incorporated into the Work Products are original to Contractor or its Subcontractors or Suppliers, and shall not infringe the copyright, trademark, trade secret, privacy, publicity, patent or other intellectual property or proprietary rights of any third party; (b) that the District's Use of the Work Products shall not violate the rights of any third party; and (c) Contractor shall obtain from all Subcontractors and Suppliers written assignments or licenses as necessary to effect the license granted to the District herein, at no additional cost to District, and shall provide copies of such documents to the District upon request. Contractor shall indemnify, defend and hold harmless the District, and any and all of its directors, officers, agents or employees to the maximum extent permitted by law from and against any and all claims, liabilities, losses, damages, or expenses (including attorneys' fees and related costs), whether direct or indirect, arising out of a breach of the warranties provided herein. The warranties and indemnification provided herein together with the provisions of Articles GC7.5 and GC7.5.1 shall survive any expiration or termination of this Contract."

ARTICLE SC5 - CONTROL OF WORK

SUPPLEMENTARY CONDITIONS

SC5.1 Contract Documents Pursuant to General Conditions Article GC5.2, five (5) copies of the conformed Contract Documents, and a complete set of Contract Drawings for the purpose of making prints for Record ("As-Built") Drawings, will be provided to Contractor at no expense.

SC5.2 Contract Drawings and Reference Drawings A list of Contract Drawings and Reference Drawings is included in the Index of the Drawings. The Contract Drawings are incorporated into the Contract Documents by reference and are furnished, along with the Reference Drawings, as a separately bound document with the Contract Documents.

SC5.3 Subcontracting General Conditions Article GC5.7 is supplemented by the following:

SC5.3.1 Contractor's Work Percentage The Contractor shall perform with its own organization Contract Work amounting to not less than Twenty-five percent (25%) of the total Bid Price, excluding any Allowance and Option Bid Items, if applicable. The percentage of Work subcontracted during the performance of the Contract will be based on the estimated percentage determined by dividing the value of Work shown on the Designation of Subcontractors and SBEs Form by the total Contract Price (excluding any Allowance items and Option Bid Items, if applicable). This percentage will be monitored for conformance by the District through completion of the Contract.

SC5.4 Requirement for Designation Delete the first sentence of General Conditions Article GC5.7.1.1 and replace with the following:

"Contractor shall have set forth on the form provided in the Bid Form, the name, location of the place of business, the California contractor license number and Contractor registration number of each Subcontractor who will perform work or labor or render service to the Contractor in or about the construction of the Work, or a Subcontractor licensed by the State of California who specially fabricates and installs a portion of the Work according to detailed drawings contained in the Contract Documents, in an amount in excess of one-half of one percent of the total amount of the Contractor's Bid, and the portion of the Work which will be done by each such Subcontractor."

SC5.5 Correspondence General Conditions Article GC5.16 is supplemented by adding the following to the end thereof:

"Contractor shall ensure that all Contract correspondence submitted to the District, including correspondence from Subcontractors of any tier, include the Contract Number and Contract Title on the subject line of the letter, Notice, or email."

ARTICLE SC6 - CONTROL OF MATERIALS

SC6.1 Property Rights in Materials Delete General Conditions Article GC6.6 and replace with the following.

"**GC6.6 Property Rights in Materials.**

GC6.6.1 Title and Risk of Loss or Damage.

(a) Title: As a security for partial, progress, or other payments, title to items for which such payments are made shall pass to the District at the time of payment. To the extent that title has not previously been vested in the District by reason of payments, title shall pass to the District when items are delivered to a carrier for transportation to the installation site (or other specified consignee), or at Acceptance, whichever occurs first. Items to which the District has received title by reason of progress or partial payments shall be segregated from other Contractor or Subcontractor materials and clearly identified as District property.

The Contractor agrees to the following relative to title:

(1) The title transferred as above shall in each case be good, and free and clear from any and all security interests, liens, or other encumbrances. The Contractor promises and agrees that it will not pledge, hypothecate, or otherwise encumber the items in any manner that would result in any lien, security interest, charge, or claim upon or against said items.

(2) The transfer of title as provided above shall not imply Acceptance by the District, nor relieve the Contractor from the responsibility to strictly comply with the Contract, and shall not relieve the Contractor of responsibility for any loss of or damage to items.

(3) The Contractor shall insert provisions in its Subcontracts sufficient to ensure compliance with the content of this Article GC6.6.

(b) Risk of Loss or Damage. Notwithstanding passage of title in whole or in part to the District, the risk or loss or damage shall remain with the Contractor until Acceptance by the District."

ARTICLE SC7 - COMPLIANCE AND LIABILITY

SC7.1 Disadvantaged Business Enterprise and Small Business Entity Participation General Conditions Article GC7.1 is supplemented by the following:

"The San Francisco Bay Area Rapid Transit District (BART or the District) is committed to carrying out all of the Disadvantaged Business Enterprise (DBE) requirements of 49 CFR Part 26 as amended from time to time. The procedures contained in the District's DBE Program will assure that all Contracts and procurements are administered without discrimination on the basis of race, color, sex, or national origin, and that DBEs have an equal opportunity to compete for and participate in the performance of all agreements, Contracts and Subcontracts awarded by the District.

It is the policy of the District to ensure nondiscrimination on the basis of race, color, sex or national origin in the award and administration of Federally funded Contracts. It is the intention of the District to create a level playing field on which DBEs and Small Business Entities (SBEs) can compete fairly for agreements, Contracts and Subcontracts, including but not limited to construction, procurement and Invitation-For-Bids Contracts, professional and technical services agreements, and purchase orders.

The District has adopted the Disadvantaged Business Enterprise Program Small Business Elements (SB Elements) as part of its DBE Program to help eliminate obstacles to SBE participation on District Contracts".

SC7.1.1 Definitions For purposes of this Contract only:

A. **Disadvantaged Business Enterprise**

A Disadvantaged Business Enterprise (DBE) is a for-profit, Small Business Concern: 1) that is at least fifty-one percent (51%) owned by one or more individuals who are socially and economically disadvantaged or, in the case of a corporation, in which at least fifty-one percent (51%) of the stock is owned by one or more socially and economically disadvantaged individuals; and 2) whose management and daily business operations are controlled by one or more of the socially and economically disadvantaged individuals who own it.

B. **Market Area Disadvantaged Business Enterprise**

Market Area Disadvantaged Business Enterprise (Market Area DBE) are those DBEs that are either located in the nine Counties of Alameda, Contra Costa, Marin, Napa, San Francisco, San Mateo, Santa Clara, Solano, and Sonoma (BART Market Area) or that have done business or attempted to do business in the BART Market Area within two years prior to the Contract advertisement date.

C. **Small Business Concern**

A Small Business Concern is: 1) an existing small business as defined by Section 3 of the Small Business Act and the Small Business Administration regulations implementing it (13 CFR Part 121), and 2) whose average annual gross receipts (including those of its affiliates) for the previous three fiscal years does not exceed $31.84 million (or as adjusted for inflation by the Secretary of DOT) pursuant to 49 CFR Section 26.65(b).

D. **Socially and Economically Disadvantaged Individuals**

Socially and economically disadvantaged individual means any individual who is a citizen (or lawfully admitted permanent resident) of the United States and who a certifier finds to be socially and economically disadvantaged on a case-by-case basis. A determination that an individual is socially and economically disadvantaged must not be based in whole or in part on race or sex. For that reason, all applicants shall qualify as socially and economically disadvantaged if they can meet the relevant criteria described in § 26.67. Being born in a particular country does not, standing alone, mean that a person is necessarily socially and economically disadvantaged.

E. If there is a conflict between the above three definitions and the definitions of the California Unified Certification Program (CUCP) certification documents, the definitions in this Supplementary Conditions Article SC7.1.1 shall prevail. Bidders may need to verify any DBE firm's continued eligibility under the DBE regulations, 49 CFR Part 26.

F. Small Business Entity (SBE) means a Small Business Concern certified as an SBE by the District or DBE certified under the CUCP. In order to be certified as an SBE, the firm must be a Small Business Concern at least 51% owned and controlled by an individual or individuals whose personal net worth does not exceed $2.047 Million. In addition, the firm shall meet the Small Business Administration (SBA) size standard for the specific North American Industry Classification System (NAICS) code for which the firm has requested certification. In no event shall the average annual gross receipts for the previous three fiscal years for the firm, (including those of its affiliates), exceed $31.84 Million (or as adjusted for inflation by the Secretary of DOT) pursuant to 49 CFR Section 26.65(b).

SC7.1.2 No DBE Participation Goal: The District is utilizing DBE-neutral efforts; therefore, there is no DBE goal.

SC7.1.3 SBE Participation Not Used.

SC7.1.3.1 SBE Information Not Used.

SC7.1.3.2 Good Faith Efforts To Meet SBE Goals Not Used.

SC7.1.5 Change Orders Not Used.

SC7.1.6 SBE Records Not Used.

SC7.1.7 Participation in SBE Programs Not Used.

SC7.1.8 Discrimination Prohibited No person shall be excluded from participation in, denied the benefits of, or otherwise discriminated against in connection with the Award and performance of this Contract on the grounds of race, color, national origin or sex.

SC7.1.9 Noncompliance Not Used.

SC7.1.9.2 Good Faith Efforts Regarding Substitution of SBEs Not Used.

SC7.1.9.3 Good Faith Efforts Assessment Not Used.

SC7.1.10 Section 1773 of the State Labor Code
Delete General Conditions Article GC7.1.3.2 and replace with the following:

"GC7.1.3.2 Section 1773 of the State Labor Code. Pursuant to the provisions of Section 1773 of the State Labor Code, the District has obtained the general prevailing rate of wages (which rate includes employer payments for health and welfare, pension, vacation, travel time and subsistence pay as provided for in Section 1773.1 of said Code, apprenticeship or other training programs authorized by Section 3093 of said Code, and similar purposes) applicable to the Work to be done, for

straight time, overtime, Saturday, Sunday, and holiday work. The holiday wage rate listed shall be applicable to all holidays recognized in the collective bargaining agreement of the particular craft, classification or type of worker concerned. Copies of the prevailing rates of wages are on file at BART Procurement Department, 2150 Webster Street, 4th Floor, Oakland, California, 94612 and will be furnished to the Contractor and other interested parties on request. The prevailing rates of wages are also available at the following website: **https://www.dir.ca.gov/OPRL/DPreWageDetermination.htm.** For crafts or classifications not shown on the prevailing wage determinations, Contractor may be required to pay the wage rate of the most closely related craft or classification shown in such determinations for Contract work. The Contractor may contact the Office of Policy, Research and Legislation, P.O. Box 420603, San Francisco, CA 94142, (415) 703-4774, statistics@dir.ca.gov for questions concerning job classifications not found in the general prevailing wage determinations."

SC7.1.10.1 Section 1777.5 of the State Labor Code, Apprentices

The Contractor and all Subcontractors shall comply with all applicable requirements of California Labor Code Section 1777.5 which, among other things, requires that only registered apprentices, as defined by Labor Code Section 3077, can be employed at the apprentice wage rate on public works.

SC7.1.11 Posting of DIR Posters

Contractor shall post the State Department of Industrial Relations (DIR) Posters in a prominent place in each Jobsite. Minimum Poster size is 8 ½" X 11". Posters specifications can be obtained at https://www.dir.ca.gov/wpnodb.html.

SC7.1.12 Ombudsperson

A. The District will assign an individual to act as an Ombudsperson for Subcontractors, and Suppliers of any tier on this Contract. The Ombudsperson may be made available to Subcontractors of any tier who are experiencing difficulties in the payment process or any other aspect of their contract work. Subject to a determination by the District's Office of Civil Rights that Ombudsperson services are needed to resolve the complaint, the Office of Civil Rights will first address the complaint and may, in its judgment, refer the matter to the Ombudsperson if no resolution is reached within 15 Days. Referring a matter to the Ombudsperson will not relieve a Subcontractor of any of its duties, rights, or obligations under its Subcontract. The Ombudsperson may be directed to investigate complaints, mediate disputes, and recommend enforcement remedies to the District.

B. The Contractor shall post on the Jobsite a notice (to be provided by the District) identifying the availability of Ombudsperson services and shall require all Subcontractors of any tier to include this Supplementary Conditions Article SC7.1.12 in Subcontracts with Subcontractor firms. Where any Subcontractor or Supplier of any tier is experiencing difficulties with a Contractor, Subcontractor or Supplier of any tier in the payment process or any other aspect of the Subcontractor's Subcontract work, the Ombudsperson may act as mediator or fact-finder when the Office of Civil Rights approves such assistance from the Ombudsperson.

SC7.1.13 Electronic Submittal of Payroll Records

"A certified copy of payroll records provided for in State Labor Code Section 1776 shall be furnished to the District each week, and shall be provided within seven (7) Days after the regular payment date of the payroll period. Failure to comply with these requirements may cause suspension of progress payments during the period of noncompliance or may delay final payment.

Within seven (7) Days following NTP, the Contractor shall register at BART's designated website for electronic submittal of Certified Payroll Records. BART's Office of Civil Rights will notify the Contractor and provide all necessary information related to the BART's designated website for electronic submittal of Certified Payroll Records. Each week, the Contractor and its Subcontractors shall submit their respective Certified Payroll Records electronically to BART's designated website in accordance with the requirements of the website. These records shall be provided within seven (7) Days after the regular payment date of the payroll period. Failure to comply with these requirements may cause a suspension of progress payments during the period of noncompliance or may delay final payment. Contractor and Subcontractors must also submit electronic Certified Payroll Records to the state DIR pursuant to LC 1776. Contractor shall include in its Subcontracts, and require its Subcontractors of every tier to include in their respective Subcontracts, provisions incorporating the requirements of this Supplementary Conditions Article SC7.1.13 for electronic submittal of Certified Payroll Records."

SUPPLEMENTARY CONDITIONS

The Contractor shall submit worker daily sign-in and sign-out sheets, as referenced in Supplementary Conditions Article SC7.1.14, to BART's designated website for electronic submittal of Certified Payroll Records within seven (7) Days after the regular payment date of the payroll period."

SC7.1.14 Worker Daily Sign-in and Sign-out Process

All workers present on the Jobsite on behalf of the Contractor and Subcontractors of all tiers shall be required to sign in on a daily sign-in and sign-out sheet, which shall be maintained by the Contractor. In accordance with Section 1723 of the State Labor Code, workers include a "laborer, worker, or mechanic." Worker also includes any individual who performs skilled or unskilled labor on the Jobsite, including owner operators. Workers may also include supervisors, foremen, owners of firms providing equipment, and any other persons who may be subject to the payment of prevailing wages.

The daily sign-in and sign-out sheet shall include the title of the contract, date, employer, worker name, craft, classification (e.g., apprentice), sign-in and sign-out time for each work period, meal and rest breaks, and worker signature. The daily sign-in and sign-out sheet shall include an original signature by the worker, or allow for a worker to sign their initials. The daily sign-in and sign-out sheet shall accurately set forth the time spent by each worker in each classification in which work is performed. The District will provide a model sign-in and sign-out sheet for use by the Contractor. Alternative formats for the daily sign-in and sign-out sheet may be utilized subject to approval by to the District's Office of Civil Rights.

The Contractor shall be responsible for collecting all daily sign-in and sign-out sheets and submitting such sheets to the District Office of Civil Rights within seven (7) Days after the regular payment date of the payroll period.

SC7.2 Buy America Certification

Add the following to General Conditions Article GC7:

SC7.2.1 Buy America Requirements

This Contract is subject to the Buy America requirements of 49 USC § 5323(j), and applicable regulations in 49 CFR Part 661 as may be amended from time to time. The following is a general summary of the "Buy America" provisions. It shall not relieve the Bidder of the responsibility to comply with official interpretations of the cited statutes or any other governing regulation on the subject.

A. All iron, steel, and manufactured products used in this Contract must be produced in the United States unless an exception is granted by the Federal Transit Administration (FTA), or Supplementary Conditions Article SC7.2.1D. below applies.

B. The Bidder whose Bid exceeds $150,000 must execute the appropriate Buy America Certificate in the Bid Documents. Failure to do so will make the Bid non-responsive. **The two signature blocks on the Buy America Certificate(s) are mutually exclusive. Bidder shall sign only one signature block on the Certificate. Signing both signature blocks will make the Bid non-responsive.** A false certification is a criminal act in violation of 18 USC §1001.

1. The Bidder who has submitted an incomplete Buy America Certificate or incorrect certificate of non-compliance through inadvertent or clerical error (but not including failure to sign the certificate, submission of certificates of both compliance and non-compliance, or failure to submit any certification), may submit to the FTA Chief Counsel within ten (10) Days of Bid opening a written explanation of the circumstances surrounding the submission of the incomplete or incorrect certification in accordance with 28 USC §1746, sworn under penalty of perjury, stating that the submission resulted from inadvertent or clerical error. The Bidder will also submit evidence of intent, such as information about the origin of the product, invoices, or other working documents. The Bidder will simultaneously send a copy of this information to the District.

2. The FTA Chief Counsel may request additional information from the Bidder, if necessary. The District may not make Contract Award until the FTA Chief Counsel issues his/her determination, except as provided in 49 CFR Part 661.15(m).

3. Certification based on ignorance of proper application of the Buy America requirements is not an inadvertent or clerical error.

C. Should a Bidder submit a Certificate of Non-Compliance with Buy America Requirements, the Bidder shall submit to the District a timely request for a waiver from the FTA Buy America Requirements pursuant to 49 CFR Part 661.7(f) or (g), which shall include all necessary facts and justification to support the granting of the waiver, **along with its Bid submittal by the Bid opening date and date specified in the Instructions to Bidders**. Waiver requests submitted after that time will not be accepted and the Bidder will be deemed nonresponsive. The District will determine no later than thirty (30) days after Bid opening whether there are sufficient grounds in the Bidder's waiver request to request a waiver from the FTA pursuant to 49 CFR Part 661.9. Should the District determine that the Bidder's waiver request does not present sufficient grounds for a waiver, the Bidder will be deemed nonresponsive. Bidders that submit a Certificate of Non-Compliance without presenting a waiver request with its Bid submittal by the Bid opening date and time will be deemed nonresponsive.

Sufficient grounds for a waiver are those waiver requests that concern the following categories:

1. Their application would be inconsistent with the public interest (see 49 CFR Part 661.7(b); or

2. Materials are not produced in the United States in sufficient and reasonably available quantities and of a satisfactory quality (see 49 CFR Part 661.7(c).

D. In the case of the procurement of rolling stock (including train control, communication and traction power equipment), Supplementary Conditions Article SC7.2.1A above does not apply if the cost of components which are produced in the United States is more than seventy percent (70%) of the cost of all components and final assembly takes place in the United States.

E. Any party may petition the FTA to investigate a successful Bidder's compliance with the Buy America certification. The procedures are set out in 49 CFR Part 661.15. If the FTA determines the evidence indicates noncompliance, the FTA will require the District to initiate an investigation. The successful Bidder has the burden of proof to establish compliance with its certification. If the successful Bidder fails to so demonstrate compliance, the successful Bidder will be required to substitute sufficient domestic materials without revision of the original Contract terms. Failure to do so will be a breach of the Contract and may lead to the initiation of debarment proceedings under 2 CFR Part 180 and 2 CFR Part 1200.

SC7.2.2 Build America, Buy America Act

This Contract is subject to federal Build America, Buy America Act (BABAA) that requires that no federal financial assistance for “infrastructure” projects is provided “unless all of the iron, steel, manufactured products, and construction materials used in the project are produced in the United States.” Section 70914 of Public Law No. 117-58, §§ 70901-52.

The Contractor certifies that the iron, steel, manufactured products, and construction materials used in this Contract are in full compliance with the BABAA, which includes the following requirements:

1. All iron and steel used in the project are produced in the United States.

2. All manufactured products must be produced in the United States.

3. All construction materials must be manufactured in the United States. Construction materials is defined an "article, material, or supply—other than an item of primarily iron or steel; a manufactured product; cement and cementitious materials; aggregates such as stone, sand, or gravel; or aggregate binding agents or additives—that is or consists primarily of: non-ferrous metals; plastic and polymer-based products (including polyvinylchloride, composite building materials, and polymers used in fiber optic cables); glass (including optic glass); lumber; or drywall."

SC7.3 Payroll Records

The Contractor shall submit weekly for each week in which Contract work is performed two (2) copies of all certified payroll records provided for in State Labor Code Section 1776 to the BART’s designated website for electronic submittal of Certified

Payroll Records. The Contractor shall also submit weekly to the Office of Civil Rights the original daily worker sign-in and sign-out sheets as referenced in Supplementary Conditions Article SC7.1.14.

SC7.3.1 Registration with State DIR
The Contractor and all Subcontractors shall comply with the requirements of State Labor Code Section 1725.5 and Section 1771.1 which, among other things, require all Contractors and Subcontractors to be registered with the State Department of Industrial Relations (DIR) in order to be qualified to bid on this Contract or to be listed as a Subcontractor on any Bid submitted, to be listed subject to the requirements of Section 4104 of the Public Contract Code, or engage in the performance of work in this Contract. If the Contractor or Subcontractor is a Joint Venture, each of the Joint Venturers as well as the Joint Venture shall be separately registered with DIR.

SC7.3.2 Certified Payroll Records Submittal to State DIR
Within thirty (30) Days following Award of the Contract, the Contractor and its Subcontractors shall register with State DIR at www.efiling.dir.ca.gov/PWCR/ in order to enroll in the electronic system for monthly submittal of Certified Payroll Records. Thereafter, each month the Contractor and its Subcontractors shall submit electronically a copy of their respective Certified Payroll Records to DIR. Contractor shall include in its Subcontracts, and require its Subcontractors of every tier to include in their respective Subcontracts, provisions incorporating the requirements of this Supplementary Conditions Article SC7.3.2 for Certified Payroll Records submittal to DIR. Failure to comply with these requirements may cause a suspension of progress payments during the period of noncompliance or may delay final payment.

SC7.4 Safety and First Aid Requirements General Conditions Article GC7.6 is supplemented by the requirements contained in the Contract Specifications Section 01 35 24, Construction Safety.

SC7.4.1 Safety Reports The Contractor shall maintain an accurate record of, and shall report to the Engineer on the forms furnished by the Engineer, exposure data (worker hours) and the number of accidents resulting in death, traumatic injury, occupational disease and damage to property, materials, supplies and equipment incidental to the Work performed under this Contract. This material shall be submitted monthly, with all occupational injuries classified as to type and nature of injury."

SC7.5 Financial Contributions Limitation Delete General Conditions Article GC7.25 in its entirety.
SC7.6 District Contractor Code of Conduct Add the following to General Conditions Article GC7:

"GC7.28 District Contractor Code of Conduct: The Contractor shall comply with the requirements of the District Contractor Code of Conduct which has been adopted by the Board of Directors of the San Francisco Bay Area Rapid Transit District. This Code of Conduct is posted at the District's website: **www.bart.gov/about/business/procurement/**. The purpose of the District Contractor Code of Conduct is to protect the integrity of the procurement process, and to provide a comprehensive statement of pertinent regulations and obligations governing the conduct of Contractors doing business with the District so they will be able to compete fairly and perform their work and services in an ethical manner. Failure to comply with the applicable requirements of the District Contractor Code of Conduct, could lead to, among other things, direction to remove an offending Subcontractor, rescinding, voiding, or terminating the Contract, or other reasonable and appropriate actions. Contractor shall include in its Subcontracts, and require its Subcontractors of every tier to include in their respective Subcontracts, provisions incorporating the requirements of the District Contractor Code of Conduct."

SC7.7 Construction General Permit Add the following to the end of General Conditions Article GC7.10:

"The State Water Resources Control Board (SWRCB) has issued a Statewide Construction General Permit that governs storm water and non-storm water discharges from construction activities. The permit is entitled Construction General Permit Order No. 2009-0009-DWQ, as modified by Order No. 2010-0014-DWQ. The Contractor shall comply with all applicable requirements of the Construction General Permit, as currently in effect and as subsequently amended or renewed."

SC7.8 District's Environmental Policy Add the following to General Conditions Article GC7:

"The Contractor and its Subcontractors shall comply with the District's Environmental Policy adopted on February 10, 2005 by the Board of Directors of the San Francisco Bay Area Rapid Transit District. The District's Environmental Policy is posted at the District's website: **www.bart.gov/about/planning/strategic**. The purpose of the District's Environmental policy is to preserve the environment by adopting feasible practices that, among other things, prevent pollution and preserve natural

resources in its operating practices. BART will monitor and implement the Environmental Policy through its Environmental Management System. Contractor shall comply with all the applicable requirements and failure to do so may be regarded as a breach of the Contract potentially leading to rescinding, voiding, or terminating the Contract, or other reasonable and appropriate actions.

SC7.9.2 Not Used.

SC7.11 Iran Contracting Act of 2010.
Pursuant to the Iran Contracting Act of 2010, Public Contract Code Sections 2200 through 2208 (The Act), by submitting a Bid, the Contractor certifies that it is not a vendor identified in the California State Department of General Services (DGS) list of ineligible vendors or persons that provide goods and services in the energy sector of Iran. Among other things, the Act prohibits vendors from providing goods or services of $20,000,000 or more in the energy sector of Iran. The DGS list of ineligible vendors can be found at https://www.dgs.ca.gov/-/media/Divisions/PD/PTCS/OPPL/Iran-Contracting-Act-List.pdf

SC7.12 U.S. Government's Economic Sanctions on Russia and Belarus, EO N-6-22.
In connection with Russia's invasion of Ukraine, the U.S. government has imposed economic sanctions on certain individuals and entities ("sanctioned persons"). Pursuant to state Executive Order N-6-22, by submitting a Bid, Contractor certifies that it is neither a vendor, nor employs individuals, identified in the U.S. Department of the Treasury, Office of Foreign Assets Control, Sanctions List Search of Specially Designated Nationals and Blocked Persons (SDNs).

SC7.13 California Air Resources Board Advanced Clean Fleets Compliance.
Vehicles with a Gross Vehicle Weight Rating (GVWR) greater than 8,500 lbs. and light-duty package delivery vehicles operated in California may be subject to the California Air Resources Board Advanced Clean Fleets regulations. Such vehicles may therefore be subject to requirements to reduce emissions of air pollutants. If Contractor's fleet is not listed on the CARB Advanced Clean Fleets (ACF) webpage as a Compliant Fleet, Contractor is required to submit a statement specifying that its fleet is not subject to the High Priority and Federal Fleets and the State and Local Government Fleets regulation.

ARTICLE SC8 - PROSECUTION AND PROGRESS

SC8.1 Time(s) of Completion Time(s) of completion for Work under this Contract pursuant to General Conditions Article GC8.3 is specified in Contract Specifications Section 01 11 00, Summary of Work.

SC8.1.1 Commencement of Work Replace the first sentence of General Conditions Article GC8.1 with the following:

"The District will issue a Notice to Proceed with an effective date not later than ninety (90) Days after execution of the Contract"

SC8.1.2 District's Right to Full Duration Contract Although Contractor could finish the Contract in less than the contractual time specified by the District, Contractor agrees that the District is purchasing the right to have Contractor present on the Jobsite for the full Contract duration or Contract Completion Time specified in Contract Specifications Section 01 11 00, Summary of Work.

SC8.2 Liquidated Damages
Liquidated damages pursuant to General Conditions Article GC8.4.1 applicable to this Contract are specified in Contract Specifications Section 01 11 00, Summary of Work.

SC8.2.1. Incentive Bonus

1. The Contractor may be eligible to receive one of the following Incentive Bonuses based on its performance as follows:

    a. If the Contractor obtains the Department of Industrial Relations (DIR) Permit and returns either one of the two elevators to service in 190 calendar days or less after the elevator was first removed from service, it will be eligible to receive a 5% bonus based on the total

amount of the Base Bid excluding all Allowances.

b. If the Contractor obtains the Department of Industrial Relations (DIR) Permit and returns both of the two elevators to service in 190 calendar days or less after the elevators were first removed from service, it will be eligible to receive a 10% bonus based on the total amount of the Base Bid excluding all Allowances.

c. If the Contractor obtains the Department of Industrial Relations (DIR) Permit and returns both of the two elevators to service in 175 calendar days or less after the elevators were first removed from service, it will be eligible to receive a 15% bonus based on the total amount of the Base Bid excluding all Allowances.

d. If the Contractor is eligible for an Incentive Bonus in described paragraphs a, b, or c above, it will be eligible to receive only the Incentive Bonus described in the respective paragraph and shall not be eligible for either of the other two. Should Contractor meet the criteria for more than one Incentive Bonus as described above, Contractor shall receive only one bonus, which will be the most favorable Bonus for which it is eligible. Under no circumstances shall the Contractor receive more than one Incentive Bonus.

2. Work performed to meet Incentive Bonus must not compromise quality of work or safety standards, or any other contractual obligations. The Contractor must ensure that all Work meets or exceeds the standards set forth in the Contract Documents. The Contractor shall continue to ensure compliance with all applicable laws and regulations related to the Work.

3. Payment of the Incentive Bonus to the Contractor shall be contingent upon the satisfactory completion of the Work, as solely determined by the District, and Acceptance of all deliverables by the District. Should the District determine that the Contractor is eligible and entitled to an Incentive Bonus, the District will issue a Change Order deducting the applicable Incentive Bonus payment amount from the Bid Schedule Allowance for Incentive Bonus.
4. The District reserves the right to withhold any and all of the Incentive Bonus payments if, in its sole discretion, it determines that the Contractor has failed to meet established criteria set forth in this section or the Work does not meet required standards per the Contract Specifications.

5. The District reserves the right to cancel any and all Incentive Bonuses at any time in its sole discretion.

6. Under no circumstances will the Incentive Bonus payment exceed $1,000,000.00, as indicated in the Incentive Bonus Payment Allowance in the Bid Schedule.

SC8.2.2 Delays
Add the following General Conditions Article GC8.2.2:

"GC8.2.2 Delays. If, in the opinion of the District, the Contractor falls behind the Schedule of Work as outlined in the Contract Documents and in the Contractor's Schedule submittals or is at risk of falling behind Schedule, then upon written Acceleration Notice from the District to the Contractor, the Contractor shall, at its sole expense and without additional charge to the District, take any and all of the following measures, subject to District approval, to accelerate the progress of the Work without compromising quality or safety standards:

- Mobilize additional labor, including overtime work, and increase the number of working shifts to ensure that the Project is brought back on schedule.
- Increase on-site supervision.
- Extend working hours (with overtime considerations and adherence to labor laws).
- Increase construction manpower in such quantities and crafts as will substantially eliminate the backlog of Work.
- Utilize readily available additional resources (within the Contractor's existing workforce or subcontractor pool).
- Engage additional subcontractors with expertise in expediting specific tasks.
- Expedite material procurement methods (e.g., air freight).
- Accelerate the priority of manufacture, fabrication and shipment preparation of Work on order with the Supplier should such priority lists exist as a normal course of its business.
- Reschedule activities to achieve maximum practical concurrence of accomplishment of Activities.
- Utilization of alternative construction methods or materials (subject to District approval).

The Contractor shall submit a revised Schedule within seven (7) days of the Acceleration Notice, demonstrating how the accelerated work will be accomplished, including any changes to the sequence of operations, in order to regain the approved schedule.

Contractor shall bear all costs and expenses associated with the acceleration, including but not limited to additional labor, materials, equipment, and any other direct or indirect costs.

The Contractor acknowledges that they shall not be entitled to any additional compensation or extension of time for complying with the Acceleration Notice, except as may be expressly provided for in this Contract."

SC8.3 Partnering

SC8.3.1 District Partnering Policy It is the policy of the District to encourage the Contractor to enter into a "Partnering" arrangement with the District as described below. The Contractor is not obligated to enter into a Partnering arrangement with the District. There will be no penalties of any kind imposed on the Contractor if it elects not to participate in a Partnering arrangement.

Partnering consists of a voluntary effort by the District and the Contractor to develop joint goals and to establish a cooperative atmosphere regarding execution of the Contract. To initiate the Partnering arrangement, the parties will conduct an open discussion prior to the start of the job.

It is expected that, at the conclusion of the initial discussion, the parties will express a consensus regarding, among other things, the respective goals in completing the Contract. Thereafter, the parties will continue discussions as necessary and will conduct periodic joint evaluations of performance throughout the life of the Contract. A maximum of one Partnering meeting during each quarter for the duration of the Contract should be planned. All costs in connection with the Partnering arrangement will be considered incidental to the work of this Contract.

SC8.3.2 Partnering Goals The Goals of Partnering are as follows:

A. For the Contractor and the District to work as partners;
B. To avoid confrontation and litigation among parties;
C. To reach a mutual understanding on how the Contract work is to be conducted; and
D. To establish an atmosphere of trust and communication.

SC8.3.3 Contract Rights The Partnering arrangement will not alter either the District's or the Contractor's legal rights and obligations under the Contract.

SC8.3.4 Allowance An Allowance has been included in the Contract to pay the costs of a Professional Facilitator and the expense of the meeting(s). The Allowance will not cover salaries and costs of the participants. The Contractor, if it elects to participate in the Partnering arrangement, shall be responsible for the payment of the Professional Facilitator and for meeting expenses and will be reimbursed for these costs from the Allowance as described in Contract Specifications Section 01 20 00, Price and Payment Procedures.

SC8.3.5 Subcontractor Participation in Partnering If Contractor elects to participate in the Partnering arrangement, it is strongly encouraged to invite all Subcontractors and anticipated Subcontractors, regardless of tier, to participate in Partnering meetings and evaluations.

SC8.4.4.4 Suspension of Work Due to Investigation or Audit.
To uphold the highest standards of integrity and transparency throughout the Contract performance, the District is committed to ensuring that all Contract activities are conducted with impartiality and accountability, ensuring public trust in the stewardship of public resources. To that end, the District may suspend the Work, partially or in its entirety, if the District or its Office of the Inspector General (OIG) initiates an investigation or audit pertaining to any Contract activity that may potentially provide cause for debarment under the District Debarment Policy, or violate any District policy, state or federal law. The Contractor acknowledges and agrees that, in accordance with California Public Contract Code Section 7102, such suspension of Work shall not be deemed a delay that is unreasonable or not within the contemplation of the parties. Accordingly, the Contractor shall not be entitled to any claim for delay damages or additional compensation arising from such suspension under this Article, other than an extension of time to complete the Work provided that the Contractor fully complies with Article GC8.4.2, Extension of Time for Certain Delays.

SC8.4.4.5 Inefficiency Claims.
The Contractor acknowledges and agrees that, except as expressly provided in this Contract, the Contractor shall not be entitled to any additional compensation or extension of time for inefficiencies encountered during the performance of the Work, and expressly waives any right to claim additional compensation or extensions of time due to inefficiencies, regardless of their cause. The Contractor further agrees that any claims for inefficiencies arising from the execution of the Work, including but not limited to productivity losses, increased labor costs, or disruptions to the Contractor's schedule, shall be deemed waived and shall not be submitted to the District.

The Contractor further agrees that any measures taken by the District to address inefficiencies, including but not limited to adjustments in project schedules or resource allocations, shall not constitute grounds for additional compensation or claims against the District, and shall not constitute a waiver of any waiver of claims expressed herein.

SC8.8 Termination for Contractor's Default.
Delete General Conditions Article GC8.8 Termination for Contractor's Default and replace with the following:

"GC8.8 Termination for Contractor's Default. If the Contractor is in default and the Contractor fails to remedy its default within five days after receipt from the Engineer of written notice of such default, the District may, in its discretion, terminate by written notice to the Contractor the Contract or such portion thereof which the Engineer deems is most directly affected by the default. The District may unilaterally defer termination beyond the five day time limit if, in the opinion of the Engineer, the Contractor is making satisfactory efforts to remedy its default. The term "default" for purposes of this Article GC8.8 includes, but is not limited to, violation of the terms of the Contract; abandonment, assignment or subletting of the Contract without approval of the District; filing a petition for bankruptcy by or against the Contractor or for appointment of a receiver for Contractor's property; failure to maintain the schedule of Work; refusal or failure to properly prosecute the Work; use of

materials, supplies, plant or equipment of improper quality or quantity; failure to use an adequate number of properly skilled workers; failure to provide adequate design professional services or supervision of such services; failure to provide proper workmanship; failure to take effective steps to end a prolonged labor dispute; debarment of the Contractor from public contracts by a public entity or the performance of the Contract in bad faith."

ARTICLE SC9 - PAYMENT, RECORDS, AND CLAIMS

SC9.1 Prompt Payment This Contract is subject to the provisions of Section 20104.50 of the California Public Contract Code which are attached hereto as Attachment SC9.1 and by this reference made a part hereof.

SC9.2 Labor Delete General Conditions Article GC9.3.1.1(b) and replace with the following:

"(b) Labor Surcharge. To the actual wages, as defined in Article GC9.3.1.1(a), will be added a labor surcharge equal to fifty percent (50%) of that set forth in the State Department of Transportation publication entitled "Labor Surcharge and Equipment Rental Rates", which is in effect on the date upon which the Work is accomplished, and which is a part of the Contract. Said labor surcharge shall constitute full compensation for all payments imposed by State and Federal laws, and for all other payments made to, or on behalf of, the workers, other than actual wages as defined in Article GC9.3.1.1 (a) and subsistence and travel allowance as specified in Article GC9.3.1.1 (c)."

SC9.3 Notice of Potential Claim General Conditions Article GC9.4.1(b) is supplemented by adding the following to the end thereof:

"All Notices of Potential Claims (NOPCs) shall be supported with sufficient documentation to justify that the claimed costs are allowable, allocable to the claim, and reasonable. The District may request such additional documentation as it deems necessary to support the resolution of NOPCs. The burden of proof for any increased cost associated with the NOPC rests with the Contractor and must be conclusively demonstrated to the District before payment will be made. The Contractor shall make its accounting records, including those of overhead and home office costs, available to the District's auditors. Records for any Subcontractors whose costs are included in any proposed or claimed cost shall also be made available."

SC9.4 District Review of Notice of Potential Claim Delete General Conditions Article GC9.4.3 in its entirety and insert the following in lieu thereof:

"GC9.4.3 Resolution of Potential Claims

(a) District Response. The District shall give a formal response to a NOPC within the following time limits after all data requested by the District or the Engineer have been provided: a response to NOPCs under $50,000 shall be given within forty-five (45) Days; a response to NOPCs from $50,000 through $375,000 shall be given within sixty (60) Days; and a response to NOPCs over $375,000 shall be given within ninety (90) Days. These time limits may be extended only by mutual agreement in writing. If the District fails or refuses to act on a NOPC within such time, the NOPC shall be deemed to have been rejected by the District on the last day of the period within which the District was required to act upon the NOPC, and the Contractor may proceed pursuant to General Conditions Article GC9.4.3(b). as though the NOPC had not been resolved.

(b) Mediation. Within fifteen (15) Days of receipt of the District's response, or within fifteen (15) Days after the applicable time limit for the District's response set forth in General Conditions Article GC9.4.3(a), whichever is earlier, the Contractor may file a written objection with the Engineer, stating clearly and in detail the basis for its objection to the District's response. Within fifteen (15) Days of receipt of the Contractor's objection, the Contractor or the District may request mediation of the NOPC in accordance with the following procedure:

(1) Notice of Mediation. Either the District or the Contractor may submit any remaining dispute to nonbinding mediation by serving a written notice of mediation ("Notice of Mediation") on the other. The Notice of Mediation shall be signed on behalf of the District, by the Engineer, and on behalf of the Contractor, by a representative having greater authority than its representative described in Article GC5.6. The mediation shall proceed in accordance with rules promulgated by the Mediator (chosen as described in Article GC9.4.3(b)(2) and shall be

concluded within thirty (30) Days, unless extended by mutual agreement of the parties. The District shall be represented by the Engineer or such other high-level representative of its choosing, and the Contractor shall be represented by a representative having greater authority than the representative described in Article GC5.6. Lawyers may participate only if both parties agree. The entire process shall be confidential and treated as a compromise negotiation for purposes of Federal and State rules of evidence.

(2) Selection of Mediator. Within fifteen (15) Days of the Notice of Mediation referred to in Article GC9.4.3(b)(1), the parties shall meet and select a disinterested third person to act as mediator ("Mediator"). If the parties fail to agree, either party may request the American Arbitration Association in San Francisco to appoint the Mediator. The Mediator shall be replaced within fifteen (15) Days of receipt of a written request of either party, using the procedure outlined above, provided, however, that either party may only replace the Mediator once.

(3) Cost of Mediator. The District, through the Engineer, shall provide to the Mediator, at no cost to the Contractor, administrative services, such as conference facilities and secretarial services. Fees and expenses of the Mediator shall be borne equally by the District and the Contractor. The District's share of the cost of the Mediator will be paid through a Contract Change Order for that purpose.

(4) Change Order. If the District and the Contractor are able to resolve their dispute through mediation, the District shall promptly process any appropriate Contract Change Order.

(c) Filing of Claim. If the NOPC has not been resolved to the satisfaction of the Contractor by the above procedures, the Contractor may file a claim against the District based upon such NOPC by including the claim in the Final Invoice submitted in accordance with General Conditions Article GC9.8, subject to the requirements of the Contract and applicable law."

SC9.5 Deferral of Legal Action General Conditions Article GC9.4.4 is supplemented by adding the following to the end thereof:

"Where applicable, the resolution of such claim shall be resolved in conformance with the requirements of Section 20104 et seq. of the California Public Contract Code, a copy of which is attached hereto as Attachment SC9.3 and by this reference made a part hereof."

SC9.6 Retention Delete General Conditions Article GC9.7.1 and replace with the following:

"GC9.7.1 Retention. In addition to amounts, if any, withheld pursuant to any other provisions of the Contract Documents, the District will retain an amount equal to five percent (5%) of the value of all work done and materials furnished. At no time during the duration of the Contract shall the retention fall below five percent (5%) of the actual work completed, except where retainage is released in accordance with Supplementary Conditions Article SC9.7, in which case the amount of retention may be reduced to less than five percent (5%) of the value of the work done and materials furnished. In no event shall the total retention proceeds withheld exceed five percent (5%) of the Contract Price. In accordance with the requirements of Public Contract Code Section 7200, the Contractor shall not retain an amount from any Subcontractor's invoice, nor shall a Subcontractor retain an amount from any lower tier Subcontractor's invoice, greater than the percentage retained by the District from the Contractor's invoice. Upon notification that a Subcontractor of any tier has had retention withheld greater than the percentage retained by the District from the Contractor, the District may deduct amounts from progress payments due the Contractor equal to the percentage in excess of the amount retained by the District from the Contractor's invoice. The District will notify the Contractor to arrange for reimbursement of the excess retention withheld. When the amount of excess retention withheld is reimbursed, the District will release the amount withheld. The Contractor shall ensure that this provision is required to be included in Subcontracts of any tier. The Contractor shall also be responsible for ensuring compliance by Subcontractors of any tier with the requirements of this provision."

In order to have retention released, the Contractor must have submitted a final SBE report showing payments and anticipated payments to all Subcontractors and Subsuppliers, including any retention expected to be released to Subcontractors including SBEs, after retention is released and final payment has been made by BART to the Contractor

SC9.7 Subcontractor Payments Delete General Conditions Article GC9.7.2.1 and replace with the following:

"GC9.7.2.1 Subcontractor Payments. The Contractor shall include in its monthly invoice submission to BART, amounts to pay for all Subcontractors' acceptable invoices, no later than thirty (30) Days after receipt of such invoices. As part of the monthly invoice submission, the Contractor shall include a copy of the form obtained from BART's designated website for electronic submittal of certified payroll records with the names of Subcontractors that invoiced the Contractor during the payment application period, the amount invoiced by each Subcontractor, and the period during which the work included in the invoice was performed. This form with the above referenced Subcontractor payment information shall be completed on BART's designated website for electronic submittal of certified payroll records. The Contractor shall promptly pay any and all Subcontractors no later than seven (7) Days after receipt of payment by BART, for satisfactory performance of its Contract, the amounts to which they are entitled, after deducting any prior payments and any amount due and payable to the Contractor by those Subcontractors. The Contractor shall pay all Subcontractors by an instrument that guarantees availability of funds immediately upon deposit of said instrument. If the Contractor determines the work of the Subcontractors to be unsatisfactory, the Contractor shall immediately notify in writing the District (with a separate notice to the Office of Civil Rights if the Subcontractor is a SBE) and state the reasons. Failure by the Contractor to comply with this requirement will be construed to be breach of Contract and may be subject to sanctions as specified in the Contract."

The District shall make prompt and regular incremental inspection of portions of the work and, upon approval of the Contractor's work at various stages of the Contract, promptly release retainage attributable to the work that has been approved. The Contractor shall cooperate with the Engineer and the Office of Civil Rights to identify, report and effectuate the prompt and regular approvals of the work. Within thirty (30) Days after the District has made such payment, the Contractor shall release to any Subcontractor who has satisfactorily completed work covered by the District's inspection and approval the retainage owed to the Subcontractor for such work. The District's incremental inspection, approval, or release of a portion of the retainage under this Article shall not constitute Acceptance.

Where there has been an incremental inspection and approval pursuant to this Supplementary Conditions Article SC9.7, a Subcontractor's work is satisfactorily completed when the Contractor certifies to the District that all the tasks called for in the Subcontract related to the work covered by the inspection and approval have been accomplished and that the Subcontractor's retention may now be released.

The Contractor shall maintain records to verify the release of such retainage to the affected Subcontractors. Such records shall show the name and business address of such Subcontractors and the total dollar amount actually paid, including the retainage, and the date of payment. A monthly report based on these records and certified to be correct by the Contractor shall be submitted with the monthly invoice referred to in General Conditions Article GC9.7. The Contractor's certification shall contain a formula used to calculate the amount paid to the Subcontractor. No invoice will be approved for payment unless the current report has been furnished.

SC9.7.1 Subcontractor Payment Tracking System Reporting Requirements General Conditions Article GC9.7.2 is supplemented by adding the following new General Conditions Article GC9.7.2.2.

"**GC9.7.2.2 Subcontractor Payment Tracking System Reporting Requirements**. Prior to the submittal of the first monthly invoice for work performed on this Contract, the Contractor shall comply with the District's Subcontractor Payment Tracking System requirements by registering this Contract on the District's website which can be accessed at **www.suppliers.bart.gov**. The Contractor shall provide all specified information at such website about itself and all first-tier Subcontractors whose Subcontracts exceed $5,000 as well as all first-tier SBEs regardless of Subcontract dollar value.

Information required to be provided includes, but is not limited to, specified contact person, Subcontractor invoices received, Subcontractor Taxpayer Identification Number (TIN), payment information for both the Contractor and its Subcontractors, as well as the total dollar amount of each first-tier Subcontract that exceeds $5,000 and each first-tier SBE Subcontract regardless of Subcontract dollar value, the total dollar amount actually paid the first-tier Subcontractor, the date of payment, and such other information as specified in the District's website.

Contractor shall update the above information monthly, including similar information about all applicable Subcontractors added to the Contract during the period of the Contract. The monthly update shall be prepared by the Contractor as specified in the District's website, and submitted electronically at **www.suppliers.bart.gov**. Such report shall be certified to be correct by the Contractor.

Failure to comply with these reporting requirements may be grounds for withholding payments due the Contractor during the period of noncompliance.

SC9.7.3 Payment Waivers. In General Conditions Article GC9.7.3, delete the terms "Section 3262" and replace with "Sections 8132, 8134, 8136 and 8138".

SC9.8 Two-Party Transactions General Conditions Article GC9.7.3 is supplemented by adding the following new General Conditions Article GC9.7.3.1 to the end thereof:

"GC9.7.3.1 Two-Party Transactions. The District may issue checks drawn jointly to the Contractor and other parties (two-party checks) to resolve Subcontractor payment disputes, subject to the concurrence of the Contractor and the Subcontractor in question. The Contractor may request that the District issue two-party checks, subject to the following conditions:

(a) The Contractor or Subcontractors shall not issue two-party checks involving a Subcontractor without the prior approval of the Subcontractor.

(b) The Contractor or Subcontractors shall not charge an administrative fee in excess of $50.00 for each two-party check.

(c) Upon notification that a party has been overcharged for a two-party check(s), the District may withhold amounts equal to fees in excess of $50.00 from progress payments due the Contractor.

(d) The District will notify the Contractor to arrange for reimbursement of the excess fees charged. When fee(s) in excess of $50.00 for each two-party check are reimbursed, the District will release the amount withheld."

SC9.9 Final Invoices General Conditions Article GC9.8.1 is supplemented by adding the following to the end thereof:

"Unless the parties agree otherwise in writing, the District will act upon the Contractor's claim stated in the Approved Final Invoice as follows:

A. Claims Under $50,000. For a claim of less than $50,000.00, the District shall respond in writing within forty-five (45) Days of receipt of the Approved Final Invoice. However, the District may request in writing within thirty (30) Days of receipt of the Approved Final Invoice, additional information or documentation supporting the claim or relating to any defense or claim the District may have against the Contractor. If such additional information or documentation is requested, the District will respond in writing to the claim within fifteen (15) Days after receipt of the further information or documentation or within a period of time no greater than that taken by the Contractor in producing the additional information or documentation, whichever is greater.

B. Claims $50,000 to $375,000. For a claim equal to or over $50,000.00 and less than or equal to $375,000.00, the District shall respond in writing within sixty (60) Days of receipt of the Approved Final Invoice. However, the District may request in writing within thirty (30) Days of receipt of the Approved Final Invoice, additional information or documentation supporting the claim or relating to any defense or claim the District may have against the Contractor. If such additional information or documentation is requested, the District will respond in writing to the claim within thirty (30) Days after receipt of the further information or documentation or within a period of time no greater than that taken by the Contractor in producing the additional information or documentation, whichever is greater.

C. Claims Over $375,000. For claims in excess of $375,000.00, the District shall respond in writing within ninety (90) Days of receipt of the Approved Final Invoice. However, the District may request in writing within sixty (60) Days of receipt of the Approved Final Invoice additional information or documentation supporting the claim or relating to any defense or claim the District may have against the Contractor. If such additional information or documentation is requested, the District will respond in writing to the claim within forty-five (45) Days after receipt of the further information or documentation or within a period of time no greater than that taken by the Contractor in producing the additional information or documentation, whichever is greater.

D. Rejection of Claim. If the District fails or refuses to act on a claim within such time, the claim shall be deemed to have been rejected by the District on the last day of the period within which the District was required to act upon the claim."

SC9.9.1 Withholding of Unpaid Claims.
In General Conditions Article GC9.8.2 (a) and (b), delete the terms "Sections 3082" and replace with "Section 8044".

SC9.10 Notices
General Conditions Article GC9.8.3 (b) is deleted and replaced with the following:

"(b) If to the Engineer, to the representative of the District designated in the Notice to Proceed, at the address therein set forth, with a copy to Office of the District Secretary, 2150 Webster Street, 10th Floor, Oakland, CA 94612.

SC9.10.1 Stop Payment Notices and Related Correspondences.

General Conditions Article GC9.8.3 is supplemented by adding the followings new General Conditions Article GC9.8.3.1:

"**GC9.8.3.1. Stop Payment Notices and Related Correspondences**.

(a) All Stop Payment Notices and related correspondences referenced in Article GC9.6 shall be filed pursuant to California State Civil Code Section 9350 (formerly Section 3082 et seq.) and shall be sent to the District as follows:

Office of the District Secretary
San Francisco Bay Area Rapid Transit District 2150 Webster Street, 10th Floor
Oakland, CA 94612

Re: Contract No. 15NL-140

Title: COLISEUM STATION ELEVATOR MODERNIZATION

The Contractor shall include in its Subcontracts, and require its Subcontractors of every tier to include in their respective Subcontracts, provisions incorporating the requirement of the above provisions in General Conditions Article GC9.8.3.1 (a)".

SUPPLEMENTARY CONDITIONS

ATTACHMENT SC9.1

ARTICLE 1.7

Modifications; Performance; Payment
[Added Stats 1992 ch 799 §2 (SB 56)]

§20104.50. Prompt Payment by local governments to contractors

(a) (1) It is the intent of the Legislature in enacting this section to require all local governments to pay their contractors on time so that these contractors can meet their own obligations. In requiring prompt payment by all local governments, the Legislature hereby finds and declares that the prompt payment of outstanding receipts is not merely a municipal affair, but is, instead, a matter of statewide concern.

(2) It is the intent of the Legislature in enacting this article to fully occupy the field of public policy relating to the prompt payment of local governments' outstanding receipts. The Legislature finds and declares that all government officials, including those in local government, must set a standard of prompt payment that any business in the private sector which may contract for services should look towards for guidance.

(b) Any local agency which fails to make any progress payment within thirty (30) Days after receipt of an undisputed and properly submitted payment request from a contractor on a construction contract shall pay interest to the contractor equivalent to the legal rate set forth in subdivision (a) of Section 685.010 of the Code of Civil Procedure.

(c) Upon receipt of a payment request, each local agency shall act in accordance with both of the following:

(1) Each payment request shall be reviewed by the local agency as soon as practicable after receipt for the purpose of determining that the payment request is a proper payment request.

(2) Any payment request determined not to be a proper payment request suitable for payment shall be returned to the contractor as soon as practicable, but not later than seven (7) Days, after receipt. A request returned pursuant to this paragraph shall be accompanied by a document setting forth in writing the reasons why the payment request is not proper.

(d) The number of days available to a local agency to make a payment without incurring interest pursuant to this section shall be reduced by the number of days by which a local agency exceeds the seven-day return requirement set forth in paragraph (2) of subdivision (c).

(e) For purposes of this article:

(1) A "local agency" includes, but is not limited to, a city, including a charter city, a county, and a city and county, and is any public entity subject to this part.

(2) A "progress payment" includes all payments due contractors, except that portion of the final payment designated by the contract as retention earnings.

(3) A payment request shall be considered properly executed if funds are available for payment of the payment request, and payment is not delayed due to an audit inquiry by the financial officer of the local agency.

(f) Each local agency shall require that this article, or a summary thereof, be set forth in the terms of any contract subject to this article.

(Added by Stats 1992 ch 799 § 2 (SB 56).

SUPPLEMENTARY CONDITIONS

ATTACHMENT SC9.3

ARTICLE 1.5

RESOLUTION OF CONSTRUCTION CLAIMS

[Added Stats 1994 ch 726 § 22 (AB 3069), effective September 21, 1994.
Former Article 1.5, also entitled “Resolution of Construction Claims”, consisting of §§ 20104-20104.8, was added Stats 1990 ch 1414 § 2 and repealed operative January 1, 1994, by the terms of § 20104.8]

.

Section

20104. Application of article; “Public work”; “Claim”
20104.2. Requirements to submit claim; Agency’s response; Dispute by claimant over response; Failure of agency to respond; Inapplicability of article to tort claims
20104.4. Procedures to resolve claims.
20104.6. Payment on portion of claim which is undisputed; Payment of interest on arbitration award or judgment

§20104. Application of article; “Public work”; “Claim”

(a) (1) This article applies to all public works claims of three hundred seventy-five thousand dollars ($375,000) or less which arise between a contractor and a local agency.

(2) This article shall not apply to any claims resulting from a contract between a contractor and a public agency when the public agency has elected to resolve any disputes pursuant to Article 7.1 (commencing with Section 10240) of Chapter 1 of Part 2.

(b) (1) Public work" has the same meaning as in Sections 3100 and 3106 of the Civil Code, except that "public work" does not include any work or improvement contracted for by the state of the Regents of the University of California.

(2) "Claim" means a separate demand by the contractor for (A) a time extension, (B) payment of money or damages arising from work done by, or on behalf of, the Contractor pursuant to the contract for a public work and payment of which is not otherwise expressly provided for or the claimant is not otherwise entitled to, or (C) an amount the payment of which is disputed by the local agency.

(c) The provisions of this article or a summary thereof shall be set forth in the plans or specifications for any work which may give rise to a claim under this article.

(d) This article applies only to contracts entered into on or after January 1, 1991.

(Added Stats.1994 ch 726 § 22 (AB 3069), effective September. 21, 1994.)

§20104.2 Requirements to submit claim; Agency’s response; Dispute by claimant over response; Failure of agency to respond; Inapplicability of article to tort claims

For any claim subject to this article, the following requirements apply:

(a) The claim shall be in writing and include the documents necessary to substantiate the claim. Claims must be filed on or before the date of final payment. Nothing in this subdivision is intended to extend the time limit or supersede notice requirements otherwise provided by contract for the filing of claims.

(b) (1) For claims of less than fifty thousand dollars ($50,000), the local agency shall respond in writing to any written claim within forty-five (45) Days of receipt of the claim, or may request in writing, within thirty (30) Days of receipt of the claim, any additional documentation supporting the claim or relating to defenses to the claim the local agency may have against the claimant.

(2) If additional information is thereafter required, it shall be requested and provided pursuant to this subdivision, upon mutual agreement of the local agency and the claimant.

(3) The local agency's written response to the claim, as further documented, shall be submitted to the claimant within fifteen (15) Days after receipt of the further documentation or within a period of time no greater than that taken by the claimant in producing the additional information, whichever is greater.

(c) (1) For claims of over fifty thousand dollars ($50,000) and less than or equal to three hundred seventy-five thousand dollars ($375,000), the local agency shall respond in writing to all written claims within sixty (60) Days of receipt of the claim, or may request, in writing, within thirty (30) Days of receipt of the claim, any additional documentation supporting the claim or relating to defenses to the claim the local agency may have against the claimant.

(2) If additional information is thereafter required, it shall be requested and provided pursuant to this subdivision, upon mutual agreement of the local agency and the claimant.

(3) The local agency's written response to the claim, as further documented, shall be submitted to the claimant within thirty (30) Days after receipt of the further documentation, or within a period of time no greater than that taken by the claimant in producing the additional information or requested documentation, whichever is greater.

(d) If the claimant disputes the local agency's written response, or the local agency fails to respond within the time prescribed, the claimant may so notify the local agency, in writing, either within fifteen (15) Days of receipt of the local agency's response or within fifteen (15) Days of the local agency's failure to respond within the time prescribed, respectively, and demand an informal conference to meet and confer for settlement of the issues in dispute. Upon a demand, the local agency shall schedule a meet and confer conference within thirty (30) Days for settlement of the dispute.

(e) Following the meet and confer conference, if the claim or any portion remains in dispute, the claimant may file a claim as provided in Chapter 1 (commencing with Section 900) and Chapter 2 (commencing with Section 910) of Part 3 of Division 3.6 of Title 1 of the Government Code. For purposes of those provisions, the running of the period of time within which a claim must be filed shall be tolled from the time the claimant submits his or her written claim pursuant to subdivision (a) until the time the claim is denied as a result of the meet and confer process, including any period of time utilized by the meet and confer process.

(f) This article does not apply to tort claims and nothing in this article is intended nor shall be construed to change the time periods for filing tort claims or actions specified by Chapter 1 (commencing with Section 900) and Chapter 2 (commencing with Section 910) of Part 3 of Division 3.6 of Title 1 of the Government Code.

(Added Stats.1994 ch 726 § (AB 3069), effective September 21, 1994.)

§20104.4 Procedures to resolve claims

The following procedures are established for all civil actions filed to resolve claims subject to this article:

(a) Within sixty (60) Days, but no earlier than thirty (30) Days, following the filing or responsive pleadings, the court shall submit the matter to nonbinding mediation unless waived by mutual stipulation of both parties. The mediation process shall provide for the selection within fifteen (15) Days by both parties of a disinterested third person as mediator, shall be commenced within thirty (30) Days of the submittal, and shall be concluded within fifteen (15) Days from the commencement of the mediation unless a time requirement is extended upon a good cause showing to the court or by stipulation of both parties. If the parties fail to select a mediator within the 15-day period, any party may petition the court to appoint the mediator.

(b) (1) If the matter remains in dispute, the case shall be submitted to judicial arbitration pursuant to Chapter 2.5 (commencing with Section 1141.10) of Title 3 of Part 3 of the Code of Civil Procedure, notwithstanding Section 1141.11 of that code. The Civil Discovery Act (Title 4 (commencing with Section 2016.010) of Part 4 of the Code of Civil Procedure) shall apply to any proceeding brought under this subdivision consistent with the rules pertaining to judicial arbitration.

(2) Notwithstanding any other provision of law, upon stipulation of the parties, arbitrators appointed for purposes of this article shall be experienced in construction law, and, upon stipulation of the parties, mediators and arbitrators shall be paid necessary and reasonable hourly rates of pay not to exceed their customary rate, and such fees and expenses shall be paid equally by the parties, except in the case of arbitration where the arbitrator, for good cause, determines a different division. In no event shall these fees or expenses be paid by state or county funds.

(3) In addition to Chapter 2.5 (commencing with Section 1141.10) of Title 3 of Part 3 of the Code of Civil Procedure, any party who after receiving an arbitration award requests a trial de novo but does not obtain a more favorable judgment shall, in addition to payment of costs and fees under that chapter, pay the attorney's fees of the other party arising out of the trial de novo.

(c) The court may, upon request by any party, order any witnesses to participate in the mediation or arbitration process.

(Added Stats 1994 ch 726 § 22 (AB 3069), effective September 21, 1994. Amended Stats 2004 ch 182 § 54 (AB 3081), operative July 1, 2005.)

§20104.6 Payment of portion of claim which is undisputed; Payment of interest on arbitration award or judgment

(a) No local agency shall fail to pay money as to any portion of a claim which is undisputed except as otherwise provided in the contract.

(b) In any suit filed under Section 20104.4, the local agency shall pay interest at the legal rate on any arbitration award or judgment. The interest shall begin to accrue on the date the suit is filed in a court of law.

(Added Stats 1994 ch 726 §22(AB 3069), effective September 21, 1994.)

§20104.8 [Section repealed 1993]

Added Stats 1990 ch 1414 §2 (AB 4165). Repealed, operative January 1, 1994, by its own terms.

SUPPLEMENTARY CONDITIONS

ATTACHMENT SC9.4

Claims and Disputes

§ 9204. Legislative findings and declarations regarding timely and complete payment of contractors for public works projects; claims process
(a) The Legislature finds and declares that it is in the best interests of the state and its citizens to ensure that all construction business performed on a public works project in the state that is complete and not in dispute is paid in full and in a timely manner.

(b) Notwithstanding any other law, including, but not limited to, Article 7.1 (commencing with Section 10240) of Chapter 1 of Part 2, Chapter 10 (commencing with Section 19100) of Part 2, and Article 1.5 (commencing with Section 20104) of Chapter 1 of Part 3, this section shall apply to any claim by a contractor in connection with a public works project.

(c) For purposes of this section:

(1) “Claim” means a separate demand by a contractor sent by registered mail or certified mail with return receipt requested, for one or more of the following:

(A) A time extension, including, without limitation, for relief from damages or penalties for delay assessed by a public entity under a contract for a public works project.

(B) Payment by the public entity of money or damages arising from work done by, or on behalf of, the contractor pursuant to the contract for a public works project and payment for which is not otherwise expressly provided or to which the claimant is not otherwise entitled.

(C) Payment of an amount that is disputed by the public entity.

(2) “Contractor” means any type of contractor within the meaning of Chapter 9 (commencing with Section 7000) of Division 3 of the Business and Professions Code who has entered into a direct contract with a public entity for a public works project.

(3)(A) “Public entity” means, without limitation, except as provided in subparagraph (B), a state agency, department, office, division, bureau, board, or commission, the California State University, the University of California, a city, including a charter city, county, including a charter county, city and county, including a charter city and county, district, special district, public authority, political subdivision, public corporation, or nonprofit transit corporation wholly owned by a public agency and formed to carry out the purposes of the public agency.

(B) “Public entity” shall not include the following:

(i) The Department of Water Resources as to any project under the jurisdiction of that department.

(ii) The Department of Transportation as to any project under the jurisdiction of that department.

(iii) The Department of Parks and Recreation as to any project under the jurisdiction of that department.

(iv) The Department of Corrections and Rehabilitation with respect to any project under its jurisdiction pursuant to Chapter 11 (commencing with Section 7000) of Title 7 of Part 3 of the Penal Code.
(v) The Military Department as to any project under the jurisdiction of that department.

(vi) The Department of General Services as to all other projects.

(vii) The High-Speed Rail authority.

“Public works project” means the erection, construction, alteration, repair, or improvement of any public structure, building, road, or other public improvement of any kind.

(4) “Subcontractor” means any type of contractor within the meaning of Chapter 9 (commencing with Section 7000) of Division 3 of the Business and Professions Code who either is in direct contract with a contractor or is a lower tier subcontractor.

(d)(1)(A) Upon receipt of a claim pursuant to this section, the public entity to which the claim applies shall conduct a reasonable review of the claim and, within a period not to exceed 45 days, shall provide the claimant a written statement identifying what portion of the claim is disputed and what portion is undisputed. Upon receipt of a claim, a public entity and a contractor may, by mutual agreement, extend the time period provided in this subdivision.

(B) The claimant shall furnish reasonable documentation to support the claim.

(C) If the public entity needs approval from its governing body to provide the claimant a written statement identifying the disputed portion and the undisputed portion of the claim, and the governing body does not meet within the 45 days or within the mutually agreed to extension of time following receipt of a claim sent by registered mail or certified mail, return receipt requested, the public entity shall have up to three days following the next duly publicly noticed meeting of the governing body after the 45-day period, or extension, expires to provide the claimant a written statement identifying the disputed portion and the undisputed portion.

(D) Any payment due on an undisputed portion of the claim shall be processed and made within 60 days after the public entity issues its written statement. If the public entity fails to issue a written statement, paragraph (3) shall apply.

(2)(A) If the claimant disputes the public entity's written response, or if the public entity fails to respond to a claim issued pursuant to this section within the time prescribed, the claimant may demand in writing an informal conference to meet and confer for settlement of the issues in dispute. Upon receipt of a demand in writing sent by registered mail or certified mail, return receipt requested, the public entity shall schedule a meet and confer conference within 30 days for settlement of the dispute.

(B) Within 10 business days following the conclusion of the meet and confer conference, if the claim or any portion of the claim remains in dispute, the public entity shall provide the claimant a written statement identifying the portion of the claim that remains in dispute and the portion that is undisputed. Any payment due on an undisputed portion of the claim shall be processed and made within 60 days after the public entity issues its written statement. Any disputed portion of the claim, as identified by the contractor in writing, shall be submitted to nonbinding mediation, with the public entity and the claimant sharing the associated costs equally. The public entity and claimant shall mutually agree to a mediator within 10 business days after the disputed portion of the claim has been identified in writing. If the parties cannot agree upon a mediator, each party shall select a mediator and those mediators shall select a qualified neutral third party to mediate with regard to the disputed portion of the claim. Each party shall bear the fees and costs charged by its respective mediator in connection with the selection of the neutral mediator. If mediation is unsuccessful, the parts of the claim remaining in dispute shall be subject to applicable procedures outside this section.

(C) For purposes of this section, mediation includes any nonbinding process, including, but not limited to, neutral evaluation or a dispute review board, in which an independent third party or board assists the parties in dispute resolution through negotiation or by issuance of an evaluation. Any mediation utilized shall conform to the timeframes in this section.

(D) Unless otherwise agreed to by the public entity and the contractor in writing, the mediation conducted pursuant to this section shall excuse any further obligation under Section 20104.4 to mediate after litigation has been commenced.

(E) This section does not preclude a public entity from requiring arbitration of disputes under private arbitration or the Public Works Contract Arbitration Program, if mediation under this section does not resolve the parties' dispute.

(3) Failure by the public entity to respond to a claim from a contractor within the time periods described in this subdivision or to otherwise meet the time requirements of this section shall result in the claim being deemed rejected in its entirety. A claim that is denied by reason of the public entity's failure to have responded to a claim, or its failure to otherwise meet the time requirements of this section, shall not constitute an adverse finding with regard to the merits of the claim or the responsibility or qualifications of the claimant.

(4) Amounts not paid in a timely manner as required by this section shall bear interest at 7 percent per annum.

(5) If a subcontractor or a lower tier subcontractor lacks legal standing to assert a claim against a public entity because privity of contract does not exist, the contractor may present to the public entity a claim on behalf of a subcontractor or lower tier subcontractor. A subcontractor may request in writing, either on his or her own behalf or on behalf of a lower tier subcontractor, that the contractor present a claim for work which was performed by the subcontractor or by a lower tier subcontractor on behalf of the subcontractor. The subcontractor requesting that the claim be presented to the public entity shall furnish reasonable documentation to support the claim. Within 45 days of receipt of this written request, the contractor shall notify the subcontractor in writing as to whether the contractor presented the claim to the public entity and, if the original contractor did not present the claim, provide the subcontractor with a statement of the reasons for not having done so.

(e) The text of this section or a summary of it shall be set forth in the plans or specifications for any public works project that may give rise to a claim under this section.

(f) A waiver of the rights granted by this section is void and contrary to public policy, provided, however, that (1) upon receipt of a claim, the parties may mutually agree to waive, in writing, mediation and proceed directly to the commencement of a civil action or binding arbitration, as applicable; and (2) a public entity may prescribe reasonable change order, claim, and dispute resolution procedures and requirements in addition to the provisions of this section, so long as the contractual provisions do not conflict with or otherwise impair the timeframes and procedures set forth in this section.
(g) This section applies to contracts entered into on or after January 1, 2017.

(h) Nothing in this section shall impose liability upon a public entity that makes loans or grants available through a competitive application process, for the failure of an awardee to meet its contractual obligations.

(i) This section shall remain in effect only until January 1, 2020, and as of that date is repealed, unless a later enacted statute, that is enacted before January 1, 2020, deletes or extends that date.

- REMAINDER OF PAGE IS BLANK -

SUPPLEMENTARY CONDITIONS

ARTICLE SC10 - DEPARTMENT OF TRANSPORTATION REQUIREMENTS

SC10.1 Definitions
The following definitions shall apply to this Contract:

Government: The United States of America (U.S.).

DOT: The U.S. Department of Transportation, or as the context may require, the U.S. Secretary of Transportation, or other person who may at the time be acting in the capacity of the Secretary or authorized representative or any other person otherwise authorized to perform the functions to be performed hereunder by DOT as that term is used in this Contract.

FTA: Federal Transit Administration.

SC10.2 Compliance to Federal, State, Local Laws, Regulations and FTA Directives
In performance of its obligations pursuant to this Contract, the Contractor agrees to comply with all applicable provisions of Federal, State, and local law, regulations, and FTA directives. The terms of the most recent amendment to any Federal, State or local laws, regulations, FTA directives, and amendments to the grant or cooperative agreement providing funding for this Contract that may be subsequently adopted, are applicable to the Contract to the maximum extent feasible, unless FTA provides otherwise in writing. The Federal or State regulations set forth in this Contract to be observed in the performance of the Contract are subject to change, and such changed requirements will apply to this Contract as required. Contractor shall include in its Subcontracts, and require its Subcontractors of every tier to include in their respective Subcontracts, provisions incorporating the requirements of this Supplementary Conditions Article SC10. Contractor's failure to comply with these requirements shall constitute a material breach of this Contract and may, in addition to other remedies, result in the withholding of progress payments to the Contractor.

SC10.3 No Federal Government Obligations to Contractor and Third Parties
Absent the Federal Government's express written consent, the Federal Government shall not be subject to any obligations or liabilities to Contractor, or any other third party in connection with the performance of the Contract. Notwithstanding any concurrence provided by the Federal Government in or approval of any solicitation, Contract, or subagreement, the Federal Government continues to have no obligations or liabilities to any party, including the Contractor.

SC10.4 Support for Contract Costs
All costs charged to the Contract shall be supported by properly executed payrolls, time records, invoices, contracts or vouchers evidencing in proper detail the nature and propriety of the charges. The Contractor shall permit the Government's authorized representatives to inspect all payrolls, records of personnel, invoices of materials and other relevant data and records, and to audit its books, records and accounts.

SC10.5 Project Identification
General Conditions Article GC4 is supplemented by adding the following:

SC10.5.1 DOT Construction Signs
Signs shall be provided by the Contractor, as directed, indicating that the project is a Federal Transit Administration Project sponsored by DOT. The signs are specified in Contract Specifications Section 01 58 00, Project Identification.

SC10.6 Inspection
In addition to the requirements of General Conditions Article GC5.11, the Government shall have access to the site of construction and shall have the right to inspect all Contract work.

SC10.7 False or Fraudulent Statements and Claims
Contractor shall comply with the following requirements:

A. The requirements of the Program Fraud Civil Remedies Act of 1986, as amended, 31 USC §§ 3801 et seq. and U.S. DOT regulations, "Program Fraud Remedies," 49 CFR Part 31, apply to Contractor's actions pertaining to the Contract. Accordingly, by signing the Contract, Contractor certifies or affirms the truthfulness and accuracy of any statement it has made, it makes, or it may make pertaining to the underlying Contract. If Contractor makes a false, fictitious,

or fraudulent claim, statement, submission, or certification, the Federal Government reserves the right to impose the penalties of the Program Fraud Civil Remedies Act of 1986, as amended, on Contractor to the extent the Federal Government deems appropriate.

B. If Contractor makes a false, fictitious, or fraudulent claim, statement, submission, or certification to the Federal Government In connection with an urbanized area formula project financed with Federal assistance authorized by 49 USC § 5307, the Government reserves the right to impose on Contractor the penalties of 18 USC § 1001 and 49 USC § 5307(n)(1), to the extent the Federal Government deems appropriate.

SC10.7.1 Fraud, Waste Or Abuse Notification.
The Contractor shall promptly notify the U.S. DOT Inspector General in addition to the FTA Chief Counsel or Regional Counsel for the Region in which the District is located, if the Contractor has knowledge of potential fraud, waste, or abuse occurring on this Project. The notification provision applies if a person has or may have submitted a false claim under the False Claims Act, 31 U.S.C. § 3729, et seq., or has or may have committed a criminal or civil violation of law pertaining to such matters as fraud, conflict of interest, bid rigging, misappropriation or embezzlement, bribery, gratuity, or similar misconduct involving federal assistance. This responsibility occurs whether the Project is subject to this Agreement, or an agreement involving a principal, officer, employee, agent, or Third Party Participant of the Contractor. It also applies to subcontractors at any tier. Knowledge, as used in this paragraph, includes, but is not limited to, knowledge of a criminal or civil investigation by a Federal, state, or local law enforcement or other investigative agency, a criminal indictment or civil complaint, or probable cause that could support a criminal indictment, or any other credible information in the possession of the Contractor. In this paragraph, “promptly” means to refer information without delay and without change. This notification provision applies to all divisions of the Contractor, including divisions tasked with law enforcement or investigatory functions.

SC10.8 Exclusionary or Discriminatory Specifications
Apart from inconsistent requirements imposed by Federal statute or regulations, Contractor shall comply with the requirements of 49 USC § 5323(h)(2) by refraining from using any Federal assistance awarded by FTA to support procurements using exclusionary or discriminatory specifications.

SC10.9 Not Used

SC10.10 Geographic Restrictions
Contractor shall refrain from using State or local geographic preferences, except those expressly mandated or encouraged by Federal statute, and as permitted by the District.

SC10.11 DOT Labor Requirements
The following DOT provisions shall be applicable to all work under the Contract, in addition to the labor requirements of General Conditions Article GC7. When there is a conflict between these DOT requirements and the Contract Documents, these DOT requirements shall take precedence.

SC10.11.1 Davis-Bacon Act, as amended
The Contractor shall comply and assures compliance with the requirements of 49 USC Section 5333(a), the Davis-Bacon Act, 40 USC Sections 276a through 276a(7), and implementing U.S. Department of Labor (DOL) regulations, "Labor Standard Provisions Applicable to Contracts Governing Federally Financed and Assisted Construction (also Labor Standard Provisions Applicable to Nonconstruction Contracts Subject to the Contract Work Hours and Safety Standards Act)," 29 CFR Part 5. In addition to the other requirements that may apply:

A. The Contractor shall pay wages to laborers and mechanics performing third party Contract work at a rate not less than the minimum wages specified in a wage determination issued by the U.S. Secretary of Labor and not less frequently than once a week. The Contractor shall place a copy of the current prevailing wage determination issued by the U.S. DOL in each solicitation for third party Contract work under the Contract, and agrees to refrain from awarding any affected third party Contract until the third party contractor agrees to the required wage determination.

"General Decision Number: CA20260018 09/17/2026

State: California

Construction Types: Building, Heavy and Highway

Counties: California Counties of
Alameda, Calaveras, Contra Costa,
Fresno, Kings, Madera, Mariposa, Merced,
Monterey, San Benito, San Francisco, San
Joaquin, San Mateo, Santa Clara, Santa
Cruz, Stanislaus and Tuolumne

Building Construction Projects
Dredging Projects-Includes Dredging Projects (does not include hopper dredge work)
Heavy Construction Projects (excludes water well drilling)
Highway Construction Projects

Modification Number	Publication Date
4	01/30/2026
5	05/18/2026
6	07/14/2026
7	09/03/2026
8	09/17/2026

ASBE0016-004 05/01/2025

	Rates	Fringes
ASBESTOS REMOVAL WORKER/HAZARDOUS MATERIAL HANDLER: INCLUDES PREPARATION, WETTING, STRIPPING, REMOVAL, SCRAPPING, VACUUMING, BAGGING AND DISPOSING OF ALL INSULATION MATERIALS FROM MECHANICAL SYSTEMS, WHETHER THEY CONTAIN ASBESTOS OR NOT (AREA 1: CALAVERAS, FRESNO, KINGS, MADERA, MARIPOSA, MERCED, MONTEREY, SAN BENITO, SAN JOAQUIN, SANTA CRUZ, STANISLAUS, & TOULMNE COUNTIES)	$ 34.56	11.40
ASBESTOS REMOVAL WORKER/HAZARDOUS MATERIAL HANDLER: INCLUDES PREPARATION, WETTING, STRIPPING, REMOVAL, SCRAPPING, VACUUMING, BAGGING AND DISPOSING OF ALL INSULATION MATERIALS FROM MECHANICAL SYSTEMS, WHETHER THEY CONTAIN ASBESTOS OR NOT (AREA 2: ALAMEDA, CONTRA COSTA, SAN FRANCISCO, SAN MATEO, & SANTA CLARA COUNTIES)	$ 44.73	12.75

ASBE0016-008 01/01/2024

	Rates	Fringes
ASBESTOS WORKERS/INSULATOR: INCLUDES THE APPLICATION OF ALL INSULATING MATERIALS, PROTECTIVE COVERINGS, COATINGS, AND FINISHES TO ALL TYPES OF MECHANICAL SYSTEMS (AREA 1: ALAMEDA, CONTRA COSTA, MONTEREY, SAN BENITO, SAN FRANCISCO, SAN MATEO, SANTA CLARA, & SANTA CRUZ)	$ 84.76	25.07
ASBESTOS WORKERS/INSULATOR: INCLUDES THE APPLICATION OF ALL INSULATING MATERIALS, PROTECTIVE COVERINGS, COATINGS, AND FINISHES TO ALL TYPES OF		

MECHANICAL SYSTEMS (AREA 2: CALAVERAS, FRESNO, KINGS, MADERA, MARIPOSA, MERCED, SAN JOAQUIN, STANISLAUS, & TUOLUMNE)	$ 64.56	25.07

BOIL0549-001 01/01/2021

	Rates	Fringes
BOILERMAKER (AREA 1: ALAMEDA, CONTRA COSTA, SAN FRANCISCO, SAN MATEO & SANTA CLARA COUNTIES)	$ 49.62	41.27
BOILERMAKER (AREA 2: REMAINING COUNTIES)	$ 45.60	38.99

BRCA0003-001 08/01/2024

	Rates	Fringes
MARBLE FINISHER	$ 42.06	19.80

BRCA0003-003 08/01/2024

	Rates	Fringes
MARBLE MASON	$ 61.72	30.31

BRCA0003-005 05/01/2024

	Rates	Fringes
BRICKLAYER (1) FRESNO, KINGS, MADERA, MARIPOSA, MERCED	$ 51.17	25.80
BRICKLAYER (7) SAN FRANCISCO, SAN MATEO	$ 57.02	28.50
BRICKLAYER (9) CALAVERAS, SAN JOAQUIN, STANISLAUS, TOULUMNE	$ 52.76	25.01
BRICKLAYER (16) MONTEREY, SANTA CRUZ	$ 54.18	27.82
BRICKLAYER (8) ALAMEDA, CONTRA COSTA, SAN BENITO, SANTA CLARA)	$ 56.94	26.28

BRCA0003-008 07/01/2024

	Rates	Fringes
TERRAZZO FINISHER	$ 44.93	20.98
TERRAZZO WORKER/SETTER	$ 60.58	29.79

BRCA0003-011 04/01/2024

	Rates	Fringes
TILE FINISHER (AREA 1: ALAMEDA, CONTRA COSTA, MONTEREY, SAN BENITO, SAN FRANCISCO, SAN MATEO, SANTA CLARA, SANTA CRUZ)	$ 37.75	19.28
TILE FINISHER (AREA 2: CALAVERAS, SAN JOAQUIN, STANISLAUS, TUOLUMNE)	$ 34.76	19.22
TILE FINISHER (AREA 3: FRESNO, KINGS, MADERA, MARIPOSA, MERCED)	$ 32.68	18.32
TILE LAYER (AREA 1: ALAMEDA, CONTRA COSTA, MONTEREY, SAN BENITO, SAN FRANCISCO, SAN MATEO, SANTA CLARA, SANTA CRUZ)	$ 59.92	22.62
TILE LAYER (AREA 2: CALAVERAS, SAN JOAQUIN, STANISLAUS, TUOLUMNE)	$ 55.17	22.52
TILE LAYER (AREA 3: FRESNO, KINGS, MADERA, MARIPOSA, MERCED)	$ 50.28	22.05

CARP0022-001 07/01/2023

	Rates	Fringes
CARPENTERS: BRIDGE BUILDER/HIGHWAY CARPENTER (SAN FRANCISCO COUNTY)	$ 60.39	33.52
CARPENTERS: HARDWOOD FLOORLAYER, SHINGLER, POWER SAW OPERATOR, STEEL SCAFFOLD & STEEL SHORING ERECTOR, SAW FILER (SAN FRANCISCO COUNTY)	$ 60.54	33.52

CARPENTERS: JOURNEYMAN CARPENTER (SAN FRANCISCO COUNTY).....$ 60.39 33.52
CARPENTERS: MILLWRIGHT (SAN FRANCISCO COUNTY).....$ 60.49 35.11

CARP0034-001 07/01/2021

	Rates	Fringes
DIVER: ASSISTANT TENDER, ROV TENDER/TECHNICIAN. DEPTH PAY (SURFACE DIVING): 50 TO 100 FT, $2.00 PER FOOT; 101 TO 150 FT, $3.00 PER FOOT; 151 TO 220 FT, $4.00 PER FOOT; 221 FT. AND DEEPER, $5.00 PER FOOT. (SATURATION DIVING: THE STANDBY RATE SHALL APPLY UNTIL SATURATION STARTS. THE SATURATION DIVING RATE APPLIES WHEN DIVERS ARE UNDER PRESSURE CONTINUOUSLY UNTIL WORK TASK AND DECOMPRESSION ARE COMPLETE. THE DIVER RATE SHALL BE PAID FOR ALL SATURATION HOURS.) (DIVING IN ENCLOSURES: WHERE IT IS NECESSARY FOR DIVERS TO ENTER PIPES OR TUNNELS, OR OTHER ENCLOSURES WHERE THERE IS NO VERTICAL ASCENT, THE FOLLOWING PREMIUM SHALL BE PAID: DISTANCE TRAVELED FROM ENTRANCE 26 FEET TO 300 FEET: $1.00 PER FOOT. WHEN IT IS NECESSARY FOR A DIVER TO ENTER ANY PIPE, TUNNEL OR OTHER ENCLOSURE LESS THAN 48"" IN HEIGHT, THE PREMIUM WILL BE $1.00 PER FOOT.) (WORK IN COMBINATION OF CLASSIFICATIONS: EMPLOYEES WORKING IN ANY COMBINATION OF CLASSIFICATIONS WITHIN THE DIVING CREW (EXCEPT DIVE SUPERVISOR) IN A SHIFT ARE PAID IN THE CLASSIFICATION WITH THE HIGHEST RATE FOR THAT SHIFT.)	$ 54.10	34.69
DIVER: DIVER STANDBY. DEPTH PAY (SURFACE DIVING): 50 TO 100 FT, $2.00 PER FOOT; 101 TO 150 FT, $3.00 PER FOOT; 151 TO 220 FT, $4.00 PER FOOT; 221 FT. AND DEEPER, $5.00 PER FOOT. (SATURATION DIVING: THE STANDBY RATE SHALL APPLY UNTIL SATURATION STARTS. THE SATURATION DIVING RATE APPLIES WHEN DIVERS ARE UNDER PRESSURE CONTINUOUSLY UNTIL WORK TASK AND DECOMPRESSION ARE COMPLETE. THE DIVER RATE SHALL BE PAID FOR ALL SATURATION HOURS.) (DIVING IN ENCLOSURES: WHERE IT IS NECESSARY FOR DIVERS TO ENTER PIPES OR TUNNELS, OR OTHER ENCLOSURES WHERE THERE IS NO VERTICAL ASCENT, THE FOLLOWING PREMIUM SHALL BE PAID: DISTANCE TRAVELED FROM ENTRANCE 26 FEET TO 300 FEET: $1.00 PER FOOT. WHEN IT IS NECESSARY FOR A DIVER TO ENTER ANY PIPE, TUNNEL OR OTHER ENCLOSURE LESS THAN 48"" IN HEIGHT, THE PREMIUM WILL BE $1.00 PER FOOT.) (WORK IN COMBINATION OF CLASSIFICATIONS: EMPLOYEES WORKING IN ANY COMBINATION OF CLASSIFICATIONS WITHIN THE DIVING CREW (EXCEPT DIVE SUPERVISOR) IN A SHIFT ARE PAID IN THE CLASSIFICATION WITH THE HIGHEST RATE FOR THAT SHIFT.)	$ 60.51	34.69
DIVER: DIVER TENDER. DEPTH PAY (SURFACE DIVING): 50 TO 100 FT, $2.00 PER FOOT; 101 TO 150 FT, $3.00 PER FOOT; 151 TO 220 FT, $4.00 PER FOOT; 221 FT. AND DEEPER, $5.00 PER FOOT. (SATURATION DIVING: THE STANDBY RATE SHALL APPLY UNTIL SATURATION STARTS. THE SATURATION DIVING RATE APPLIES WHEN DIVERS ARE UNDER PRESSURE CONTINUOUSLY UNTIL WORK TASK AND DECOMPRESSION ARE COMPLETE. THE DIVER RATE SHALL BE PAID FOR ALL SATURATION HOURS.) (DIVING IN ENCLOSURES: WHERE IT IS NECESSARY FOR DIVERS TO ENTER PIPES OR TUNNELS, OR OTHER ENCLOSURES WHERE THERE IS NO VERTICAL ASCENT, THE FOLLOWING PREMIUM SHALL BE PAID: DISTANCE TRAVELED FROM ENTRANCE 26		

FEET TO 300 FEET: $1.00 PER FOOT. WHEN IT IS NECESSARY FOR A DIVER TO ENTER ANY PIPE, TUNNEL OR OTHER ENCLOSURE LESS THAN 48"" IN HEIGHT, THE PREMIUM WILL BE $1.00 PER FOOT.) (WORK IN COMBINATION OF CLASSIFICATIONS: EMPLOYEES WORKING IN ANY COMBINATION OF CLASSIFICATIONS WITHIN THE DIVING CREW (EXCEPT DIVE SUPERVISOR) IN A SHIFT ARE PAID IN THE CLASSIFICATION WITH THE HIGHEST RATE FOR THAT SHIFT.).....$ 59.51 34.69

DIVER: DIVER WET. DEPTH PAY (SURFACE DIVING): 50 TO 100 FT, $2.00 PER FOOT; 101 TO 150 FT, $3.00 PER FOOT; 151 TO 220 FT, $4.00 PER FOOT; 221 FT. AND DEEPER, $5.00 PER FOOT. (SATURATION DIVING: THE STANDBY RATE SHALL APPLY UNTIL SATURATION STARTS. THE SATURATION DIVING RATE APPLIES WHEN DIVERS ARE UNDER PRESSURE CONTINUOUSLY UNTIL WORK TASK AND DECOMPRESSION ARE COMPLETE. THE DIVER RATE SHALL BE PAID FOR ALL SATURATION HOURS.) (DIVING IN ENCLOSURES: WHERE IT IS NECESSARY FOR DIVERS TO ENTER PIPES OR TUNNELS, OR OTHER ENCLOSURES WHERE THERE IS NO VERTICAL ASCENT, THE FOLLOWING PREMIUM SHALL BE PAID: DISTANCE TRAVELED FROM ENTRANCE 26 FEET TO 300 FEET: $1.00 PER FOOT. WHEN IT IS NECESSARY FOR A DIVER TO ENTER ANY PIPE, TUNNEL OR OTHER ENCLOSURE LESS THAN 48"" IN HEIGHT, THE PREMIUM WILL BE $1.00 PER FOOT.) (WORK IN COMBINATION OF CLASSIFICATIONS: EMPLOYEES WORKING IN ANY COMBINATION OF CLASSIFICATIONS WITHIN THE DIVING CREW (EXCEPT DIVE SUPERVISOR) IN A SHIFT ARE PAID IN THE CLASSIFICATION WITH THE HIGHEST RATE FOR THAT SHIFT.).....$ 103.62 34.69

DIVER: MANIFOLD OPERATOR (MIXED GAS). DEPTH PAY (SURFACE DIVING): 50 TO 100 FT, $2.00 PER FOOT; 101 TO 150 FT, $3.00 PER FOOT; 151 TO 220 FT, $4.00 PER FOOT; 221 FT. AND DEEPER, $5.00 PER FOOT. (SATURATION DIVING: THE STANDBY RATE SHALL APPLY UNTIL SATURATION STARTS. THE SATURATION DIVING RATE APPLIES WHEN DIVERS ARE UNDER PRESSURE CONTINUOUSLY UNTIL WORK TASK AND DECOMPRESSION ARE COMPLETE. THE DIVER RATE SHALL BE PAID FOR ALL SATURATION HOURS.) (DIVING IN ENCLOSURES: WHERE IT IS NECESSARY FOR DIVERS TO ENTER PIPES OR TUNNELS, OR OTHER ENCLOSURES WHERE THERE IS NO VERTICAL ASCENT, THE FOLLOWING PREMIUM SHALL BE PAID: DISTANCE TRAVELED FROM ENTRANCE 26 FEET TO 300 FEET: $1.00 PER FOOT. WHEN IT IS NECESSARY FOR A DIVER TO ENTER ANY PIPE, TUNNEL OR OTHER ENCLOSURE LESS THAN 48"" IN HEIGHT, THE PREMIUM WILL BE $1.00 PER FOOT.) (WORK IN COMBINATION OF CLASSIFICATIONS: EMPLOYEES WORKING IN ANY COMBINATION OF CLASSIFICATIONS WITHIN THE DIVING CREW (EXCEPT DIVE SUPERVISOR) IN A SHIFT ARE PAID IN THE CLASSIFICATION WITH THE HIGHEST RATE FOR THAT SHIFT.).....$ 64.51 34.69

DIVER: MANIFOLD OPERATOR (STANDBY). DEPTH PAY (SURFACE DIVING): 50 TO 100 FT, $2.00 PER FOOT; 101 TO 150 FT, $3.00 PER FOOT; 151 TO 220 FT, $4.00 PER FOOT; 221 FT. AND DEEPER, $5.00 PER FOOT. (SATURATION DIVING: THE STANDBY RATE SHALL APPLY UNTIL SATURATION STARTS. THE SATURATION DIVING RATE APPLIES WHEN DIVERS ARE UNDER PRESSURE CONTINUOUSLY UNTIL WORK TASK AND DECOMPRESSION ARE COMPLETE. THE DIVER RATE SHALL BE PAID FOR ALL SATURATION HOURS.) (DIVING IN ENCLOSURES: WHERE IT IS NECESSARY FOR DIVERS TO ENTER PIPES OR TUNNELS,

OR OTHER ENCLOSURES WHERE THERE IS NO VERTICAL ASCENT, THE FOLLOWING PREMIUM SHALL BE PAID: DISTANCE TRAVELED FROM ENTRANCE 26 FEET TO 300 FEET: $1.00 PER FOOT. WHEN IT IS NECESSARY FOR A DIVER TO ENTER ANY PIPE, TUNNEL OR OTHER ENCLOSURE LESS THAN 48"" IN HEIGHT, THE PREMIUM WILL BE $1.00 PER FOOT.) (WORK IN COMBINATION OF CLASSIFICATIONS: EMPLOYEES WORKING IN ANY COMBINATION OF CLASSIFICATIONS WITHIN THE DIVING CREW (EXCEPT DIVE SUPERVISOR) IN A SHIFT ARE PAID IN THE CLASSIFICATION WITH THE HIGHEST RATE FOR THAT SHIFT.).....$ 59.51 34.69

CARP0034-003 07/01/2021

	Rates	Fringes
PILEDRIVER	$ 54.10	34.69

CARP0035-007 07/01/2020

	Rates	Fringes
MODULAR FURNITURE INSTALLER: INSTALLER (AREA 1: ALAMEDA, CONTRA COSTA, SAN FRANCISCO, SAN MATEO, SANTA CLARA COUNTIES)	$ 28.76	22.53
MODULAR FURNITURE INSTALLER: INSTALLER (AREA 2: MONTEREY, SAN BENITO, SANTA CRUZ COUNTIES)	$ 26.11	22.53
MODULAR FURNITURE INSTALLER: INSTALLER (AREA 3: CALAVERAS, FRESNO, KINGS, MADERA, MARIPOSA, MERCED, SAN JOAQUIN, STANISLAUS, TUOLUMNE COUNTIES)	$ 25.16	22.53
MODULAR FURNITURE INSTALLER: LEAD INSTALLER (AREA 2: MONTEREY, SAN BENITO, SANTA CRUZ COUNTIES)	$ 29.08	23.03
MODULAR FURNITURE INSTALLER: LEAD INSTALLER (AREA 3: CALAVERAS, FRESNO, KINGS, MADERA, MARIPOSA, MERCED, SAN JOAQUIN, STANISLAUS, TUOLUMNE COUNTIES)	$ 27.96	23.03
MODULAR FURNITURE INSTALLER: LEAD INSTALLER (AREA 1: ALAMEDA, CONTRA COSTA, SAN FRANCISCO, SAN MATEO, SANTA CLARA COUNTIES)	$ 32.21	23.03
MODULAR FURNITURE INSTALLER: MASTER INSTALLER (AREA 1: ALAMEDA, CONTRA COSTA, SAN FRANCISCO, SAN MATEO, SANTA CLARA COUNTIES)	$ 36.43	23.03
MODULAR FURNITURE INSTALLER: MASTER INSTALLER (AREA 2: MONTEREY, SAN BENITO, SANTA CRUZ COUNTIES)	$ 32.71	23.03
MODULAR FURNITURE INSTALLER: MASTER INSTALLER (AREA 3: CALAVERAS, FRESNO, KINGS, MADERA, MARIPOSA, MERCED, SAN JOAQUIN, STANISLAUS, TUOLUMNE COUNTIES)	$ 31.38	23.03

CARP0035-008 08/01/2020

	Rates	Fringes
DRYWALL INSTALLERS/LATHERS (AREA 1: ALAMEDA, CONTRA COSTA, SAN FRANCISCO, SAN MATEO, SANTA CLARA COUNTIES)	$ 52.65	31.26
DRYWALL INSTALLERS/LATHERS (AREA 2: MONTEREY, SAN BENITO, SANTA CRUZ COUNTIES)	$ 46.77	31.26
DRYWALL INSTALLERS/LATHERS (AREA 3: SAN JOAQUIN)	$ 47.27	31.26
DRYWALL INSTALLERS/LATHERS (AREA 4: CALAVERAS, FRESNO, KINGS, MADERA, MARIPOSA, MERCED, STANISLAUS, TUOLUMNE COUNTIES)	$ 45.92	31.26
DRYWALL STOCKER/SCRAPPER (AREA 1: ALAMEDA, CONTRA COSTA, SAN FRANCISCO, SAN MATEO, SANTA CLARA COUNTIES)	$ 26.33	18.22
DRYWALL STOCKER/SCRAPPER (AREA 2: MONTEREY, SAN BENITO, SANTA CRUZ COUNTIES)	$ 23.39	18.22
DRYWALL STOCKER/SCRAPPER (AREA 3: SAN JOAQUIN)	$ 23.64	18.22
DRYWALL STOCKER/SCRAPPER (AREA 4: CALAVERAS,		

FRESNO, KINGS, MADERA, MARIPOSA, MERCED,
STANISLAUS, TUOLUMNE COUNTIES).....$ 22.97 18.22

CARP0152-001 07/01/2020

	Rates	Fringes
CARPENTERS: BRIDGE BUILDER/HIGHWAY CARPENTER (CONTRA COSTA COUNTY)	$ 52.65	30.82
CARPENTERS: HARDWOOD FLOORLAYER, SHINGLER, POWER SAW OPERATOR, STEEL SCAFFOLD & STEEL SHORING ERECTOR, SAW FILER (CONTRA COSTA COUNTY)	$ 52.80	30.82
CARPENTERS: JOURNEYMAN CARPENTER (CONTRA COSTA COUNTY)	$ 52.65	30.82
CARPENTERS: MILLWRIGHT (CONTRA COSTA COUNTY)	$ 52.75	32.41

CARP0152-002 07/01/2020

	Rates	Fringes
CARPENTERS: BRIDGE BUILDER/HIGHWAY CARPENTER (SAN JOAQUIN COUNTY)	$ 52.65	30.82
CARPENTERS: HARDWOOD FLOORLAYER, SHINGLER, POWER SAW OPERATOR, STEEL SCAFFOLD & STEEL SHORING ERECTOR, SAW FILER (SAN JOAQUIN COUNTY)	$ 46.92	30.82
CARPENTERS: JOURNEYMAN CARPENTER (SAN JOAQUIN COUNTY)	$ 46.77	30.82
CARPENTERS: MILLWRIGHT (SAN JOAQUIN COUNTY)	$ 49.27	32.41

CARP0152-004 07/01/2020

	Rates	Fringes
CARPENTERS: BRIDGE BUILDER/HIGHWAY CARPENTER (CALAVERAS, MARIPOSA, MERCED, STANISLAUS AND TUOLUMNE COUNTIES)	$ 52.65	30.82
CARPENTERS: HARDWOOD FLOORLAYER, SHINGLER, POWER SAW OPERATOR, STEEL SCAFFOLD & STEEL SHORING ERECTOR, SAW FILER CALAVERAS, MARIPOSA, MERCED, STANISLAUS AND TUOLUMNE COUNTIES	$ 45.57	30.82
CARPENTERS: JOURNEYMAN CARPENTER (CALAVERAS, MARIPOSA, MERCED, STANISLAUS AND TUOLUMNE COUNTIES)	$ 45.42	30.82
CARPENTERS: MILLWRIGHT (CALAVERAS, MARIPOSA, MERCED, STANISLAUS AND TUOLUMNE COUNTIES)	$ 47.92	32.41

CARP0217-001 07/01/2023

	Rates	Fringes
CARPENTERS: BRIDGE BUILDER/HIGHWAY CARPENTER (SAN MATEO COUNTY)	$ 60.39	33.52
CARPENTERS: HARDWOOD FLOORLAYER, SHINGLER, POWER SAW OPERATOR, STEEL SCAFFOLD & STEEL SHORING ERECTOR, SAW FILER (SAN MATEO COUNTY)	$ 60.54	33.52
CARPENTERS: JOURNEYMAN CARPENTER (SAN MATEO COUNTY)	$ 60.39	33.52
CARPENTERS: MILLWRIGHT (SAN MATEO COUNTY)	$ 60.49	35.11

CARP0405-001 07/01/2021

	Rates	Fringes
CARPENTERS: BRIDGE BUILDER/HIGHWAY CARPENTER (SANTA CLARA COUNTY)	$ 54.85	31.49
CARPENTERS: HARDWOOD FLOORLAYER, SHINGLER, POWER SAW OPERATOR, STEEL SCAFFOLD & STEEL SHORING ERECTOR, SAW FILER (SANTA CLARA COUNTY)	$ 55.00	31.49
CARPENTERS: JOURNEYMAN CARPENTER (SANTA CLARA COUNTY)	$ 54.85	31.49
CARPENTERS: MILLWRIGHT (SANTA CLARA COUNTY)	$ 54.95	33.08

CARP0405-002 07/01/2021

	Rates	Fringes
CARPENTERS: BRIDGE BUILDER/HIGHWAY CARPENTER (SAN BENITO COUNTY)	$ 54.85	31.49
CARPENTERS: HARDWOOD FLOORLAYER, SHINGLER, POWER SAW OPERATOR, STEEL SCAFFOLD & STEEL SHORING ERECTOR, SAW FILER (SAN BENITO COUNTY)	$ 49.12	31.49
CARPENTERS: JOURNEYMAN CARPENTER (SAN BENITO COUNTY)	$ 48.97	31.49
CARPENTERS: MILLWRIGHT (SAN BENITO COUNTY)	$ 51.47	33.08

CARP0505-001 07/01/2021

	Rates	Fringes
CARPENTERS: BRIDGE BUILDER/HIGHWAY CARPENTER (SANTA CRUZ COUNTY)	$ 54.85	31.49
CARPENTERS: HARDWOOD FLOORLAYER, SHINGLER, POWER SAW OPERATOR, STEEL SCAFFOLD & STEEL SHORING ERECTOR, SAW FILER (SANTA CRUZ COUNTY)	$ 49.12	31.49
CARPENTERS: JOURNEYMAN CARPENTER (SANTA CRUZ COUNTY)	$ 48.97	31.49
CARPENTERS: MILLWRIGHT (SANTA CRUZ COUNTY)	$ 51.47	33.08

CARP0605-001 07/01/2021

	Rates	Fringes
CARPENTERS: BRIDGE BUILDER/HIGHWAY CARPENTER (MONTEREY COUNTY)	$ 54.85	31.49
CARPENTERS: HARDWOOD FLOORLAYER, SHINGLER, POWER SAW OPERATOR, STEEL SCAFFOLD & STEEL SHORING ERECTOR, SAW FILER (MONTEREY COUNTY)	$ 49.12	31.49
CARPENTERS: JOURNEYMAN CARPENTER (MONTEREY COUNTY)	$ 48.97	31.49
CARPENTERS: MILLWRIGHT (MONTEREY COUNTY)	$ 51.47	33.08

CARP0701-001 07/01/2021

	Rates	Fringes
CARPENTERS: BRIDGE BUILDER/HIGHWAY CARPENTER (FRESNO AND MADERA COUNTIES)	$ 54.85	31.49
CARPENTERS: HARDWOOD FLOORLAYER, SHINGLER, POWER SAW OPERATOR, STEEL SCAFFOLD & STEEL SHORING ERECTOR, SAW FILER (FRESNO AND MADERA COUNTIES)	$ 47.77	31.49
CARPENTERS: JOURNEYMAN CARPENTER (FRESNO AND MADERA COUNTIES)	$ 47.62	31.49
CARPENTERS: MILLWRIGHT (FRESNO AND MADERA COUNTIES)	$ 50.12	33.08

CARP0713-001 07/01/2021

	Rates	Fringes
CARPENTERS: BRIDGE BUILDER/HIGHWAY CARPENTER (ALAMEDA COUNTY)	$ 54.85	31.49
CARPENTERS: HARDWOOD FLOORLAYER, SHINGLER, POWER SAW OPERATOR, STEEL SCAFFOLD & STEEL SHORING ERECTOR, SAW FILER (ALAMEDA COUNTY)	$ 55.00	31.49
CARPENTERS: JOURNEYMAN CARPENTER (ALAMEDA COUNTY)	$ 54.85	31.49
CARPENTERS: MILLWRIGHT (ALAMEDA COUNTY)	$ 54.95	33.08

CARP1109-001 07/01/2021

	Rates	Fringes
CARPENTERS: BRIDGE BUILDER/HIGHWAY CARPENTER (KINGS COUNTY)	$ 54.85	31.49
CARPENTERS: HARDWOOD FLOORLAYER, SHINGLER, POWER SAW OPERATOR, STEEL SCAFFOLD & STEEL SHORING		

ERECTOR, SAW FILER KINGS COUNTY.....$ 47.77 31.49
CARPENTERS: JOURNEYMAN CARPENTER (KINGS COUNTY).....$ 47.62 31.49
CARPENTERS: MILLWRIGHT (KINGS COUNTY).....$ 50.12 33.08

ELEC0006-004 12/01/2025

	Rates	Fringes
SOUND & COMMUNICATIONS: INSTALLER. (SCOPE OF WORK: INCLUDING ANY DATA SYSTEM WHOSE ONLY FUNCTION IS TO TRANSMIT OR RECEIVE INFORMATION; EXCLUDING ALL OTHER DATA SYSTEMS OR MULTIPLE SYSTEMS WHICH INCLUDE CONTROL FUNCTION OR POWER SUPPLY; INCLUSION OR EXCLUSION OF TERMINATIONS AND TESTINGS OF CONDUCTORS DETERMINED BY THEIR FUNCTION; EXCLUDING FIRE ALARM WORK WHEN INSTALLED IN RACEWAYS (INCLUDING WIRE AND CABLE PULLING) AND WHEN PERFORMED ON NEW OR MAJOR REMODEL BUILDING PROJECTS OR JOBS FOR WHICH THE CONDUCTORS FOR THE FIRE ALARM SYSTEM ARE INSTALLED IN CONDUIT; EXCLUDING INSTALLATION OF RACEWAY SYSTEMS, LINE VOLTAGE WORK, INDUSTRIAL WORK, LIFE-SAFETY SYSTEMS (ALL BUILDINGS HAVING FLOORS LOCATED MORE THAN 75' ABOVE THE LOWEST FLOOR LEVEL HAVING BUILDING ACCESS); EXCLUDING ENERGY MANAGEMENT SYSTEMS.) (FOOTNOTE: FIRE ALARM WORK WHEN INSTALLED IN RACEWAYS (INCLUDING WIRE AND CABLE PULLING), ON PROJECTS WHICH INVOLVE NEW OR MAJOR REMODEL BUILDING CONSTRUCTION, FOR WHICH THE CONDUCTORS FOR THE FIRE ALARM SYSTEM ARE INSTALLED IN THE CONDUIT, SHALL BE PERFORMED BY THE INSIDE ELECTRICIAN.) (SAN FRANCISCO COUNTY).....$ 58.83	31.51
SOUND & COMMUNICATIONS: TECHNICIAN (SCOPE OF WORK: INCLUDING ANY DATA SYSTEM WHOSE ONLY FUNCTION IS TO TRANSMIT OR RECEIVE INFORMATION; EXCLUDING ALL OTHER DATA SYSTEMS OR MULTIPLE SYSTEMS WHICH INCLUDE CONTROL FUNCTION OR POWER SUPPLY; INCLUSION OR EXCLUSION OF TERMINATIONS AND TESTINGS OF CONDUCTORS DETERMINED BY THEIR FUNCTION; EXCLUDING FIRE ALARM WORK WHEN INSTALLED IN RACEWAYS (INCLUDING WIRE AND CABLE PULLING) AND WHEN PERFORMED ON NEW OR MAJOR REMODEL BUILDING PROJECTS OR JOBS FOR WHICH THE CONDUCTORS FOR THE FIRE ALARM SYSTEM ARE INSTALLED IN CONDUIT; EXCLUDING INSTALLATION OF RACEWAY SYSTEMS, LINE VOLTAGE WORK, INDUSTRIAL WORK, LIFE-SAFETY SYSTEMS (ALL BUILDINGS HAVING FLOORS LOCATED MORE THAN 75' ABOVE THE LOWEST FLOOR LEVEL HAVING BUILDING ACCESS); EXCLUDING ENERGY MANAGEMENT SYSTEMS.) (FOOTNOTE: FIRE ALARM WORK WHEN INSTALLED IN RACEWAYS (INCLUDING WIRE AND CABLE PULLING), ON PROJECTS WHICH INVOLVE NEW OR MAJOR REMODEL BUILDING CONSTRUCTION, FOR WHICH THE CONDUCTORS FOR THE FIRE ALARM SYSTEM ARE INSTALLED IN THE CONDUIT, SHALL BE PERFORMED BY THE INSIDE ELECTRICIAN.) (SAN FRANCISCO COUNTY) (SAN FRANCISCO COUNTY) .....$ 67.65	31.78

ELEC0006-007 06/01/2024

	Rates	Fringes
ELECTRICIAN (SAN FRANCISCO COUNTY).....$ 91.25		48.05

ELEC0100-002 09/01/2025

	Rates	Fringes
ELECTRICIAN (FRESNO, KINGS, AND MADERA COUNTIES)....$ 50.00		30.15

ELEC0100-005 12/01/2024

	Rates	Fringes
COMMUNICATIONS SYSTEM: INSTALLER (SCOPE OF WORK: INCLUDES THE INSTALLATION TESTING, SERVICE AND MAINTENANCE, OF THE FOLLOWING SYSTEMS WHICH UTILIZE THE TRANSMISSION AND/OR TRANSFERENCE OF VOICE, SOUND, VISION AND DIGITAL FOR COMMERCIAL, EDUCATION, SECURITY AND ENTERTAINMENT PURPOSES FOR THE FOLLOWING: TV MONITORING AND SURVEILLANCE, BACKGROUND-FOREGROUND MUSIC, INTERCOM AND TELEPHONE INTERCONNECT, INVENTORY CONTROL SYSTEMS, MICROWAVE TRANSMISSION, MULTI-MEDIA, MULTIPLEX, NURSE CALL SYSTEM, RADIO PAGE, SCHOOL INTERCOM AND SOUND, BURGLAR ALARMS, AND LOW VOLTAGE MASTER CLOCK SYSTEMS. A. SOUND AND VOICE TRANSMISSION/TRANSFERENCE SYSTEMS BACKGROUND FOREGROUND MUSIC, INTERCOM AND TELEPHONE INTERCONNECT SYSTEMS, TELEPHONE SYSTEMS NURSE CALL SYSTEMS, RADIO PAGE SYSTEMS, SCHOOL INTERCOM AND SOUND SYSTEMS, BURGLAR ALARM SYSTEMS, LOW VOLTAGE, MASTER CLOCK SYSTEMS, MULTI-MEDIA/MULTIPLEX SYSTEMS, SOUND AND MUSICAL ENTERTAINMENT SYSTEMS, RF SYSTEMS, ANTENNAS AND WAVE GUIDE. B. FIRE ALARM SYSTEMS INSTALLATION, WIRE PULLING AND TESTING. C. TELEVISION AND VIDEO SYSTEMS TELEVISION MONITORING AND SURVEILLANCE SYSTEMS VIDEO SECURITY SYSTEMS, VIDEO ENTERTAINMENT SYSTEMS, VIDEO EDUCATIONAL SYSTEMS, MICROWAVE TRANSMISSION SYSTEMS, CATV AND CCTV. D. SECURITY SYSTEMS PERIMETER SECURITY SYSTEMS VIBRATION SENSOR SYSTEMS CARD ACCESS SYSTEMS ACCESS CONTROL SYSTEMS, SONAR/INFRARED MONITORING EQUIPMENT. E. COMMUNICATIONS SYSTEMS THAT TRANSMIT OR RECEIVE INFORMATION AND/OR CONTROL SYSTEMS THAT ARE INTRINSIC TO THE ABOVE LISTED SYSTEMS SCADA (SUPERVISORY CONTROL AND DATA ACQUISITION) PCM (PULSE CODE MODULATION) INVENTORY CONTROL SYSTEMS, DIGITAL DATA SYSTEMS BROADBAND AND BASEBAND AND CARRIERS POINT OF SALE SYSTEMS, VSAT DATA SYSTEMS DATA COMMUNICATION SYSTEMS RF AND REMOTE CONTROL SYSTEMS, FIBER OPTIC DATA SYSTEMS. WORK EXCLUDED RACEWAY SYSTEMS ARE NOT COVERED (EXCLUDING LADDER-RACK FOR THE PURPOSE OF THE ABOVE LISTED SYSTEMS). CHASES AND/OR NIPPLES (NOT TO EXCEED 10 FEET) MAY BE INSTALLED ON OPEN WIRING SYSTEMS. ENERGY MANAGEMENT SYSTEMS. SCADA (SUPERVISORY CONTROL AND DATA ACQUISITION) WHEN NOT INTRINSIC TO THE ABOVE LISTED SYSTEMS (IN THE SCOPE). FIRE ALARM SYSTEMS WHEN INSTALLED IN RACEWAYS (INCLUDING WIRE AND CABLE PULLING) SHALL BE PERFORMED AT THE ELECTRICIAN WAGE RATE, WHEN EITHER OF THE FOLLOWING TWO (2) CONDITIONS APPLY: 1. THE PROJECT INVOLVES NEW OR MAJOR REMODEL BUILDING TRADES CONSTRUCTION. 2. THE CONDUCTORS FOR THE FIRE ALARM SYSTEM ARE INSTALLED IN CONDUIT.) (FRESNO, KINGS, MADERA)	$ 45.28	28.01
COMMUNICATIONS SYSTEM: TECHNICIAN (SCOPE OF WORK: INCLUDES THE INSTALLATION TESTING, SERVICE AND MAINTENANCE, OF THE FOLLOWING SYSTEMS WHICH UTILIZE THE TRANSMISSION AND/OR TRANSFERENCE OF VOICE, SOUND, VISION AND DIGITAL FOR COMMERCIAL, EDUCATION, SECURITY AND ENTERTAINMENT PURPOSES FOR THE FOLLOWING: TV MONITORING AND SURVEILLANCE, BACKGROUND-FOREGROUND MUSIC, INTERCOM AND TELEPHONE		

INTERCONNECT, INVENTORY CONTROL SYSTEMS, MICROWAVE TRANSMISSION, MULTI-MEDIA, MULTIPLEX, NURSE CALL SYSTEM, RADIO PAGE, SCHOOL INTERCOM AND SOUND, BURGLAR ALARMS, AND LOW VOLTAGE MASTER CLOCK SYSTEMS. A. SOUND AND VOICE TRANSMISSION/TRANSFERENCE SYSTEMS BACKGROUND FOREGROUND MUSIC, INTERCOM AND TELEPHONE INTERCONNECT SYSTEMS, TELEPHONE SYSTEMS NURSE CALL SYSTEMS, RADIO PAGE SYSTEMS, SCHOOL INTERCOM AND SOUND SYSTEMS, BURGLAR ALARM SYSTEMS, LOW VOLTAGE, MASTER CLOCK SYSTEMS, MULTI-MEDIA/MULTIPLEX SYSTEMS, SOUND AND MUSICAL ENTERTAINMENT SYSTEMS, RF SYSTEMS, ANTENNAS AND WAVE GUIDE. B. FIRE ALARM SYSTEMS INSTALLATION, WIRE PULLING AND TESTING. C. TELEVISION AND VIDEO SYSTEMS TELEVISION MONITORING AND SURVEILLANCE SYSTEMS VIDEO SECURITY SYSTEMS, VIDEO ENTERTAINMENT SYSTEMS, VIDEO EDUCATIONAL SYSTEMS, MICROWAVE TRANSMISSION SYSTEMS, CATV AND CCTV. D. SECURITY SYSTEMS PERIMETER SECURITY SYSTEMS VIBRATION SENSOR SYSTEMS CARD ACCESS SYSTEMS ACCESS CONTROL SYSTEMS, SONAR/INFRARED MONITORING EQUIPMENT. E. COMMUNICATIONS SYSTEMS THAT TRANSMIT OR RECEIVE INFORMATION AND/OR CONTROL SYSTEMS THAT ARE INTRINSIC TO THE ABOVE LISTED SYSTEMS SCADA (SUPERVISORY CONTROL AND DATA ACQUISITION) PCM (PULSE CODE MODULATION) INVENTORY CONTROL SYSTEMS, DIGITAL DATA SYSTEMS BROADBAND AND BASEBAND AND CARRIERS POINT OF SALE SYSTEMS, VSAT DATA SYSTEMS DATA COMMUNICATION SYSTEMS RF AND REMOTE CONTROL SYSTEMS, FIBER OPTIC DATA SYSTEMS. WORK EXCLUDED RACEWAY SYSTEMS ARE NOT COVERED (EXCLUDING LADDER-RACK FOR THE PURPOSE OF THE ABOVE LISTED SYSTEMS). CHASES AND/OR NIPPLES (NOT TO EXCEED 10 FEET) MAY BE INSTALLED ON OPEN WIRING SYSTEMS. ENERGY MANAGEMENT SYSTEMS. SCADA (SUPERVISORY CONTROL AND DATA ACQUISITION) WHEN NOT INTRINSIC TO THE ABOVE LISTED SYSTEMS (IN THE SCOPE). FIRE ALARM SYSTEMS WHEN INSTALLED IN RACEWAYS (INCLUDING WIRE AND CABLE PULLING) SHALL BE PERFORMED AT THE ELECTRICIAN WAGE RATE, WHEN EITHER OF THE FOLLOWING TWO (2) CONDITIONS APPLY: 1. THE PROJECT INVOLVES NEW OR MAJOR REMODEL BUILDING TRADES CONSTRUCTION. 2. THE CONDUCTORS FOR THE FIRE ALARM SYSTEM ARE INSTALLED IN CONDUIT.) (FRESNO, KINGS, MADERA) .....$ 52.07 28.21

ELEC0234-001 12/30/2025

	Rates	Fringes
ELECTRICIAN ZONE A : ALL OF SANTA CRUZ, MONTEREY, AND SAN BENITO COUNTIES WITHIN 25 AIR MILES OF HIGHWAY 1 AND DOLAN ROAD IN MOSS LANDING, AND AN AREA EXTENDING 5 MILES EAST AND WEST OF HIGHWAY 101 SOUTH TO THE SAN LUIS OBISPO COUNTY LINE (MONTEREY, SAN BENITO AND SANTA CRUZ COUNTIES).....	$ 70.41	33.76
ELECTRICIAN ZONE B: ANY AREA OUTSIDE OF ZONE A (MONTEREY, SAN BENITO AND SANTA CRUZ COUNTIES).....	$ 77.45	33.97

ELEC0234-003 12/01/2021

	Rates	Fringes
SOUND & COMMUNICATIONS: INSTALLER (SCOPE OF WORK: INCLUDING ANY DATA SYSTEM WHOSE ONLY FUNCTION IS TO TRANSMIT OR RECEIVE INFORMATION; EXCLUDING ALL OTHER DATA SYSTEMS OR MULTIPLE SYSTEMS WHICH		

INCLUDE CONTROL FUNCTION OR POWER SUPPLY; INCLUSION
OR EXCLUSION OF TERMINATIONS AND TESTINGS OF
CONDUCTORS DETERMINED BY THEIR FUNCTION; EXCLUDING
FIRE ALARM WORK WHEN INSTALLED IN RACEWAYS
(INCLUDING WIRE AND CABLE PULLING) AND WHEN
PERFORMED ON NEW OR MAJOR REMODEL BUILDING
PROJECTS OR JOBS FOR WHICH THE CONDUCTORS FOR THE
FIRE ALARM SYSTEM ARE INSTALLED IN CONDUIT;
EXCLUDING INSTALLATION OF RACEWAY SYSTEMS, LINE
VOLTAGE WORK, INDUSTRIAL WORK, LIFE-SAFETY SYSTEMS
(ALL BUILDINGS HAVING FLOORS LOCATED MORE THAN 75'
ABOVE THE LOWEST FLOOR LEVEL HAVING BUILDING
ACCESS); EXCLUDING ENERGY MANAGEMENT SYSTEMS.)
(FOOTNOTE: FIRE ALARM WORK WHEN INSTALLED IN
RACEWAYS (INCLUDING WIRE AND CABLE PULLING), ON
PROJECTS WHICH INVOLVE NEW OR MAJOR REMODEL
BUILDING CONSTRUCTION, FOR WHICH THE CONDUCTORS FOR
THE FIRE ALARM SYSTEM ARE INSTALLED IN THE CONDUIT,
SHALL BE PERFORMED BY THE INSIDE ELECTRICIAN.)
(MONTEREY, SAN BENITO, AND SANTA CRUZ COUNTIES) ....$ 47.93 24.09
SOUND & COMMUNICATIONS: TECHNICIAN (SCOPE OF WORK:
INCLUDING ANY DATA SYSTEM WHOSE ONLY FUNCTION IS TO
TRANSMIT OR RECEIVE INFORMATION; EXCLUDING ALL
OTHER DATA SYSTEMS OR MULTIPLE SYSTEMS WHICH
INCLUDE CONTROL FUNCTION OR POWER SUPPLY; INCLUSION
OR EXCLUSION OF TERMINATIONS AND TESTINGS OF
CONDUCTORS DETERMINED BY THEIR FUNCTION; EXCLUDING
FIRE ALARM WORK WHEN INSTALLED IN RACEWAYS
(INCLUDING WIRE AND CABLE PULLING) AND WHEN
PERFORMED ON NEW OR MAJOR REMODEL BUILDING
PROJECTS OR JOBS FOR WHICH THE CONDUCTORS FOR THE
FIRE ALARM SYSTEM ARE INSTALLED IN CONDUIT;
EXCLUDING INSTALLATION OF RACEWAY SYSTEMS, LINE
VOLTAGE WORK, INDUSTRIAL WORK, LIFE-SAFETY SYSTEMS
(ALL BUILDINGS HAVING FLOORS LOCATED MORE THAN 75'
ABOVE THE LOWEST FLOOR LEVEL HAVING BUILDING
ACCESS); EXCLUDING ENERGY MANAGEMENT SYSTEMS.)
(FOOTNOTE: FIRE ALARM WORK WHEN INSTALLED IN
RACEWAYS (INCLUDING WIRE AND CABLE PULLING), ON
PROJECTS WHICH INVOLVE NEW OR MAJOR REMODEL
BUILDING CONSTRUCTION, FOR WHICH THE CONDUCTORS FOR
THE FIRE ALARM SYSTEM ARE INSTALLED IN THE CONDUIT,
SHALL BE PERFORMED BY THE INSIDE ELECTRICIAN.)
(MONTEREY, SAN BENITO, AND SANTA CRUZ COUNTIES) ....$ 55.12 24.30

ELEC0302-001 03/01/2025

	Rates	Fringes
CABLE SPLICER (CONTRA COSTA COUNTY).....	$ 74.54	36.09
ELECTRICIAN (CONTRA COSTA COUNTY).....	$ 66.26	35.84

ELEC0302-003 12/01/2025

	Rates	Fringes

SOUND & COMMUNICATIONS: INSTALLER (SCOPE OF WORK:
INCLUDING ANY DATA SYSTEM WHOSE ONLY FUNCTION IS TO
TRANSMIT OR RECEIVE INFORMATION; EXCLUDING ALL
OTHER DATA SYSTEMS OR MULTIPLE SYSTEMS WHICH
INCLUDE CONTROL FUNCTION OR POWER SUPPLY; INCLUSION
OR EXCLUSION OF TERMINATIONS AND TESTINGS OF
CONDUCTORS DETERMINED BY THEIR FUNCTION; EXCLUDING
FIRE ALARM WORK WHEN INSTALLED IN RACEWAYS
(INCLUDING WIRE AND CABLE PULLING) AND WHEN
PERFORMED ON NEW OR MAJOR REMODEL BUILDING PROJECTS
OR JOBS FOR WHICH THE CONDUCTORS FOR THE FIRE ALARM

SYSTEM ARE INSTALLED IN CONDUIT; EXCLUDING INSTALLATION OF RACEWAY SYSTEMS, LINE VOLTAGE WORK, INDUSTRIAL WORK, LIFE-SAFETY SYSTEMS (ALL BUILDINGS HAVING FLOORS LOCATED MORE THAN 75' ABOVE THE LOWEST FLOOR LEVEL HAVING BUILDING ACCESS); EXCLUDING ENERGY MANAGEMENT SYSTEMS.) (FOOTNOTE: FIRE ALARM WORK WHEN INSTALLED IN RACEWAYS (INCLUDING WIRE AND CABLE PULLING), ON PROJECTS WHICH INVOLVE NEW OR MAJOR REMODEL BUILDING CONSTRUCTION, FOR WHICH THE CONDUCTORS FOR THE FIRE ALARM SYSTEM ARE INSTALLED IN THE CONDUIT, SHALL BE PERFORMED BY THE INSIDE ELECTRICIAN.) (CONTRA COSTA COUNTY) .....$ 53.08 30.84

SOUND & COMMUNICATIONS: TECHNICIAN (SCOPE OF WORK: INCLUDING ANY DATA SYSTEM WHOSE ONLY FUNCTION IS TO TRANSMIT OR RECEIVE INFORMATION; EXCLUDING ALL OTHER DATA SYSTEMS OR MULTIPLE SYSTEMS WHICH INCLUDE CONTROL FUNCTION OR POWER SUPPLY; INCLUSION OR EXCLUSION OF TERMINATIONS AND TESTINGS OF CONDUCTORS DETERMINED BY THEIR FUNCTION; EXCLUDING FIRE ALARM WORK WHEN INSTALLED IN RACEWAYS (INCLUDING WIRE AND CABLE PULLING) AND WHEN PERFORMED ON NEW OR MAJOR REMODEL BUILDING PROJECTS OR JOBS FOR WHICH THE CONDUCTORS FOR THE FIRE ALARM SYSTEM ARE INSTALLED IN CONDUIT; EXCLUDING INSTALLATION OF RACEWAY SYSTEMS, LINE VOLTAGE WORK, INDUSTRIAL WORK, LIFE-SAFETY SYSTEMS (ALL BUILDINGS HAVING FLOORS LOCATED MORE THAN 75' ABOVE THE LOWEST FLOOR LEVEL HAVING BUILDING ACCESS); EXCLUDING ENERGY MANAGEMENT SYSTEMS.) (FOOTNOTE: FIRE ALARM WORK WHEN INSTALLED IN RACEWAYS (INCLUDING WIRE AND CABLE PULLING), ON PROJECTS WHICH INVOLVE NEW OR MAJOR REMODEL BUILDING CONSTRUCTION, FOR WHICH THE CONDUCTORS FOR THE FIRE ALARM SYSTEM ARE INSTALLED IN THE CONDUIT, SHALL BE PERFORMED BY THE INSIDE ELECTRICIAN.) (CONTRA COSTA COUNTY) .....$ 61.04 31.08

ELEC0332-001 06/01/2025

	Rates	Fringes
CABLE SPLICER (FOOTNOTES: WORK UNDER COMPRESSED AIR OR WHERE GAS MASKS ARE REQUIRED, ORWORK ON LADDERS, SCAFFOLDS, STACKS, ""BOSUN'S CHAIRS,"" OR OTHER STRUCTURES AND WHERE THE WORKERS ARE NOT PROTECTED BY PERMANENT GUARD RAILS AT A DISTANCE OF 40 TO 60 FT. FROM THE GROUND OR SUPPORTING STRUCTURES: TO BE PAID ONE AND ONE-HALF TIMES THE STRAIGHT-TIME RATE OF PAY. WORK ON STRUCTURES OF 60 FT. OR OVER (AS DESCRIBED ABOVE): TO BE PAID TWICE THE STRAIGHT-TIME RATE OF PAY.) (SANTA CLARA COUNTY)	$ 104.68	49.46
ELECTRICIAN (FOOTNOTES: WORK UNDER COMPRESSED AIR OR WHERE GAS MASKS ARE REQUIRED, ORWORK ON LADDERS, SCAFFOLDS, STACKS, ""BOSUN'S CHAIRS,"" OR OTHER STRUCTURES AND WHERE THE WORKERS ARE NOT PROTECTED BY PERMANENT GUARD RAILS AT A DISTANCE OF 40 TO 60 FT. FROM THE GROUND OR SUPPORTING STRUCTURES: TO BE PAID ONE AND ONE-HALF TIMES THE STRAIGHT-TIME RATE OF PAY. WORK ON STRUCTURES OF 60 FT. OR OVER (AS DESCRIBED ABOVE): TO BE PAID TWICE THE STRAIGHT-TIME RATE OF PAY.) (SANTA CLARA COUNTY)...	$ 91.03	49.05

ELEC0332-003 12/01/2025

	Rates	Fringes
SOUND & COMMUNICATIONS: INSTALLER (SCOPE OF WORK: INCLUDING ANY DATA SYSTEM WHOSE ONLY FUNCTION IS TO TRANSMIT OR RECEIVE INFORMATION; EXCLUDING ALL OTHER DATA SYSTEMS OR MULTIPLE SYSTEMS WHICH INCLUDE CONTROL FUNCTION OR POWER SUPPLY; INCLUSION OR EXCLUSION OF TERMINATIONS AND TESTINGS OF CONDUCTORS DETERMINED BY THEIR FUNCTION; EXCLUDING FIRE ALARM WORK WHEN INSTALLED IN RACEWAYS (INCLUDING WIRE AND CABLE PULLING) AND WHEN PERFORMED ON NEW OR MAJOR REMODEL BUILDING PROJECTS OR JOBS FOR WHICH THE CONDUCTORS FOR THE FIRE ALARM SYSTEM ARE INSTALLED IN CONDUIT; EXCLUDING INSTALLATION OF RACEWAY SYSTEMS, LINE VOLTAGE WORK, INDUSTRIAL WORK, LIFE-SAFETY SYSTEMS (ALL BUILDINGS HAVING FLOORS LOCATED MORE THAN 75' ABOVE THE LOWEST FLOOR LEVEL HAVING BUILDING ACCESS); EXCLUDING ENERGY MANAGEMENT SYSTEMS.) (FOOTNOTE: FIRE ALARM WORK WHEN INSTALLED IN RACEWAYS (INCLUDING WIRE AND CABLE PULLING), ON PROJECTS WHICH INVOLVE NEW OR MAJOR REMODEL BUILDING CONSTRUCTION, FOR WHICH THE CONDUCTORS FOR THE FIRE ALARM SYSTEM ARE INSTALLED IN THE CONDUIT, SHALL BE PERFORMED BY THE INSIDE ELECTRICIAN.) (SANTA CLARA COUNTY)	$ 58.33	31.00
SOUND & COMMUNICATIONS: TECHNICIAN (SCOPE OF WORK: INCLUDING ANY DATA SYSTEM WHOSE ONLY FUNCTION IS TO TRANSMIT OR RECEIVE INFORMATION; EXCLUDING ALL OTHER DATA SYSTEMS OR MULTIPLE SYSTEMS WHICH INCLUDE CONTROL FUNCTION OR POWER SUPPLY; INCLUSION OR EXCLUSION OF TERMINATIONS AND TESTINGS OF CONDUCTORS DETERMINED BY THEIR FUNCTION; EXCLUDING FIRE ALARM WORK WHEN INSTALLED IN RACEWAYS (INCLUDING WIRE AND CABLE PULLING) AND WHEN PERFORMED ON NEW OR MAJOR REMODEL BUILDING PROJECTS OR JOBS FOR WHICH THE CONDUCTORS FOR THE FIRE ALARM SYSTEM ARE INSTALLED IN CONDUIT; EXCLUDING INSTALLATION OF RACEWAY SYSTEMS, LINE VOLTAGE WORK, INDUSTRIAL WORK, LIFE-SAFETY SYSTEMS (ALL BUILDINGS HAVING FLOORS LOCATED MORE THAN 75' ABOVE THE LOWEST FLOOR LEVEL HAVING BUILDING ACCESS); EXCLUDING ENERGY MANAGEMENT SYSTEMS.) (FOOTNOTE: FIRE ALARM WORK WHEN INSTALLED IN RACEWAYS (INCLUDING WIRE AND CABLE PULLING), ON PROJECTS WHICH INVOLVE NEW OR MAJOR REMODEL BUILDING CONSTRUCTION, FOR WHICH THE CONDUCTORS FOR THE FIRE ALARM SYSTEM ARE INSTALLED IN THE CONDUIT, SHALL BE PERFORMED BY THE INSIDE ELECTRICIAN.) (SANTA CLARA COUNTY)	$ 67.08	31.26

ELEC0595-001 06/01/2026

	Rates	Fringes
CABLE SPLICER (ALAMEDA COUNTY)	$ 91.14	51.29
ELECTRICIAN (ALAMEDA COUNTY)	$ 79.25	50.94

ELEC0595-002 06/01/2024

	Rates	Fringes
CABLE SPLICER (CALAVERAS AND SAN JOAQUIN COUNTIES)	$ 59.34	32.26
ELECTRICIAN: ALL OTHER WORK (CALAVERAS AND SAN JOAQUIN COUNTIES)	$ 49.45	31.96
ELECTRICIAN: TUNNEL WORK (CALAVERAS AND SAN JOAQUIN COUNTIES)	$ 51.92	32.04

ELEC0595-006 12/01/2025

	Rates	Fringes
SOUND & COMMUNICATIONS: INSTALLER (SCOPE OF WORK: INCLUDING ANY DATA SYSTEM WHOSE ONLY FUNCTION IS TO TRANSMIT OR RECEIVE INFORMATION; EXCLUDING ALL OTHER DATA SYSTEMS OR MULTIPLE SYSTEMS WHICH INCLUDE CONTROL FUNCTION OR POWER SUPPLY; INCLUSION OR EXCLUSION OF TERMINATIONS AND TESTINGS OF CONDUCTORS DETERMINED BY THEIR FUNCTION; EXCLUDING FIRE ALARM WORK WHEN INSTALLED IN RACEWAYS (INCLUDING WIRE AND CABLE PULLING) AND WHEN PERFORMED ON NEW OR MAJOR REMODEL BUILDING PROJECTS OR JOBS FOR WHICH THE CONDUCTORS FOR THE FIRE ALARM SYSTEM ARE INSTALLED IN CONDUIT; EXCLUDING INSTALLATION OF RACEWAY SYSTEMS, LINE VOLTAGE WORK, INDUSTRIAL WORK, LIFE-SAFETY SYSTEMS (ALL BUILDINGS HAVING FLOORS LOCATED MORE THAN 75' ABOVE THE LOWEST FLOOR LEVEL HAVING BUILDING ACCESS); EXCLUDING ENERGY MANAGEMENT SYSTEMS.) (FOOTNOTE: FIRE ALARM WORK WHEN INSTALLED IN RACEWAYS (INCLUDING WIRE AND CABLE PULLING), ON PROJECTS WHICH INVOLVE NEW OR MAJOR REMODEL BUILDING CONSTRUCTION, FOR WHICH THE CONDUCTORS FOR THE FIRE ALARM SYSTEM ARE INSTALLED IN THE CONDUIT, SHALL BE PERFORMED BY THE INSIDE ELECTRICIAN.) (ALAMEDA COUNTY)	$ 58.33	31.00
SOUND & COMMUNICATIONS: TECHNICIAN (SCOPE OF WORK: INCLUDING ANY DATA SYSTEM WHOSE ONLY FUNCTION IS TO TRANSMIT OR RECEIVE INFORMATION; EXCLUDING ALL OTHER DATA SYSTEMS OR MULTIPLE SYSTEMS WHICH INCLUDE CONTROL FUNCTION OR POWER SUPPLY; INCLUSION OR EXCLUSION OF TERMINATIONS AND TESTINGS OF CONDUCTORS DETERMINED BY THEIR FUNCTION; EXCLUDING FIRE ALARM WORK WHEN INSTALLED IN RACEWAYS (INCLUDING WIRE AND CABLE PULLING) AND WHEN PERFORMED ON NEW OR MAJOR REMODEL BUILDING PROJECTS OR JOBS FOR WHICH THE CONDUCTORS FOR THE FIRE ALARM SYSTEM ARE INSTALLED IN CONDUIT; EXCLUDING INSTALLATION OF RACEWAY SYSTEMS, LINE VOLTAGE WORK, INDUSTRIAL WORK, LIFE-SAFETY SYSTEMS (ALL BUILDINGS HAVING FLOORS LOCATED MORE THAN 75' ABOVE THE LOWEST FLOOR LEVEL HAVING BUILDING ACCESS); EXCLUDING ENERGY MANAGEMENT SYSTEMS.) (FOOTNOTE: FIRE ALARM WORK WHEN INSTALLED IN RACEWAYS (INCLUDING WIRE AND CABLE PULLING), ON PROJECTS WHICH INVOLVE NEW OR MAJOR REMODEL BUILDING CONSTRUCTION, FOR WHICH THE CONDUCTORS FOR THE FIRE ALARM SYSTEM ARE INSTALLED IN THE CONDUIT, SHALL BE PERFORMED BY THE INSIDE ELECTRICIAN.) (ALAMEDA COUNTY)	$ 67.08	31.26

ELEC0595-008 12/01/2024

	Rates	Fringes
COMMUNICATIONS SYSTEM: INSTALLER (SCOPE OF WORK: INCLUDING ANY DATA SYSTEM WHOSE ONLY FUNCTION IS TO TRANSMIT OR RECEIVE INFORMATION; EXCLUDING ALL OTHER DATA SYSTEMS OR MULTIPLE SYSTEMS WHICH INCLUDE CONTROL FUNCTION OR POWER SUPPLY; INCLUSION OR EXCLUSION OF TERMINATIONS AND TESTINGS OF CONDUCTORS DETERMINED BY THEIR FUNCTION; EXCLUDING FIRE ALARM WORK WHEN INSTALLED IN RACEWAYS (INCLUDING WIRE AND CABLE PULLING) AND WHEN PERFORMED ON NEW OR MAJOR REMODEL BUILDING PROJECTS		

OR JOBS FOR WHICH THE CONDUCTORS FOR THE FIRE ALARM SYSTEM ARE INSTALLED IN CONDUIT; EXCLUDING INSTALLATION OF RACEWAY SYSTEMS, LINE VOLTAGE WORK, INDUSTRIAL WORK, LIFE-SAFETY SYSTEMS (ALL BUILDINGS HAVING FLOORS LOCATED MORE THAN 75' ABOVE THE LOWEST FLOOR LEVEL HAVING BUILDING ACCESS); EXCLUDING ENERGY MANAGEMENT SYSTEMS.) (FOOTNOTE: FIRE ALARM WORK WHEN INSTALLED IN RACEWAYS (INCLUDING WIRE AND CABLE PULLING), ON PROJECTS WHICH INVOLVE NEW OR MAJOR REMODEL BUILDING CONSTRUCTION, FOR WHICH THE CONDUCTORS FOR THE FIRE ALARM SYSTEM ARE INSTALLED IN THE CONDUIT, SHALL BE PERFORMED BY THE INSIDE ELECTRICIAN.) (CALAVERAS AND SAN JOAQUIN COUNTIES) .....$ 45.28 28.01

COMMUNICATIONS SYSTEM: TECHNICIAN (SCOPE OF WORK: INCLUDING ANY DATA SYSTEM WHOSE ONLY FUNCTION IS TO TRANSMIT OR RECEIVE INFORMATION; EXCLUDING ALL OTHER DATA SYSTEMS OR MULTIPLE SYSTEMS WHICH INCLUDE CONTROL FUNCTION OR POWER SUPPLY; INCLUSION OR EXCLUSION OF TERMINATIONS AND TESTINGS OF CONDUCTORS DETERMINED BY THEIR FUNCTION; EXCLUDING FIRE ALARM WORK WHEN INSTALLED IN RACEWAYS (INCLUDING WIRE AND CABLE PULLING) AND WHEN PERFORMED ON NEW OR MAJOR REMODEL BUILDING PROJECTS OR JOBS FOR WHICH THE CONDUCTORS FOR THE FIRE ALARM SYSTEM ARE INSTALLED IN CONDUIT; EXCLUDING INSTALLATION OF RACEWAY SYSTEMS, LINE VOLTAGE WORK, INDUSTRIAL WORK, LIFE-SAFETY SYSTEMS (ALL BUILDINGS HAVING FLOORS LOCATED MORE THAN 75' ABOVE THE LOWEST FLOOR LEVEL HAVING BUILDING ACCESS); EXCLUDING ENERGY MANAGEMENT SYSTEMS.) (FOOTNOTE: FIRE ALARM WORK WHEN INSTALLED IN RACEWAYS (INCLUDING WIRE AND CABLE PULLING), ON PROJECTS WHICH INVOLVE NEW OR MAJOR REMODEL BUILDING CONSTRUCTION, FOR WHICH THE CONDUCTORS FOR THE FIRE ALARM SYSTEM ARE INSTALLED IN THE CONDUIT, SHALL BE PERFORMED BY THE INSIDE ELECTRICIAN.) (CALAVERAS AND SAN JOAQUIN COUNTIES) .....$ 52.07 28.21

ELEC0617-001 06/01/2025

	Rates	Fringes
ELECTRICIAN (SAN MATEO COUNTY).....	$ 86.00	51.07

ELEC0617-003 12/01/2025

	Rates	Fringes
SOUND & COMMUNICATIONS: INSTALLER (SCOPE OF WORK: INCLUDING ANY DATA SYSTEM WHOSE ONLY FUNCTION IS TO TRANSMIT OR RECEIVE INFORMATION; EXCLUDING ALL OTHER DATA SYSTEMS OR MULTIPLE SYSTEMS WHICH INCLUDE CONTROL FUNCTION OR POWER SUPPLY; INCLUSION OR EXCLUSION OF TERMINATIONS AND TESTINGS OF CONDUCTORS DETERMINED BY THEIR FUNCTION; EXCLUDING FIRE ALARM WORK WHEN INSTALLED IN RACEWAYS (INCLUDING WIRE AND CABLE PULLING) AND WHEN PERFORMED ON NEW OR MAJOR REMODEL BUILDING PROJECTS OR JOBS FOR WHICH THE CONDUCTORS FOR THE FIRE ALARM SYSTEM ARE INSTALLED IN CONDUIT; EXCLUDING INSTALLATION OF RACEWAY SYSTEMS, LINE VOLTAGE WORK, INDUSTRIAL WORK, LIFE-SAFETY SYSTEMS (ALL BUILDINGS HAVING FLOORS LOCATED MORE THAN 75' ABOVE THE LOWEST FLOOR LEVEL HAVING BUILDING ACCESS); EXCLUDING ENERGY MANAGEMENT SYSTEMS.) (FOOTNOTE: FIRE ALARM WORK WHEN INSTALLED IN RACEWAYS		

(INCLUDING WIRE AND CABLE PULLING), ON PROJECTS WHICH INVOLVE NEW OR MAJOR REMODEL BUILDING CONSTRUCTION, FOR WHICH THE CONDUCTORS FOR THE FIRE ALARM SYSTEM ARE INSTALLED IN THE CONDUIT, SHALL BE PERFORMED BY THE INSIDE ELECTRICIAN.) (SAN MATEO COUNTY).....$ 58.33 31.00

SOUND & COMMUNICATIONS: TECHNICIAN (SCOPE OF WORK: INCLUDING ANY DATA SYSTEM WHOSE ONLY FUNCTION IS TO TRANSMIT OR RECEIVE INFORMATION; EXCLUDING ALL OTHER DATA SYSTEMS OR MULTIPLE SYSTEMS WHICH INCLUDE CONTROL FUNCTION OR POWER SUPPLY; INCLUSION OR EXCLUSION OF TERMINATIONS AND TESTINGS OF CONDUCTORS DETERMINED BY THEIR FUNCTION; EXCLUDING FIRE ALARM WORK WHEN INSTALLED IN RACEWAYS (INCLUDING WIRE AND CABLE PULLING) AND WHEN PERFORMED ON NEW OR MAJOR REMODEL BUILDING PROJECTS OR JOBS FOR WHICH THE CONDUCTORS FOR THE FIRE ALARM SYSTEM ARE INSTALLED IN CONDUIT; EXCLUDING INSTALLATION OF RACEWAY SYSTEMS, LINE VOLTAGE WORK, INDUSTRIAL WORK, LIFE-SAFETY SYSTEMS (ALL BUILDINGS HAVING FLOORS LOCATED MORE THAN 75' ABOVE THE LOWEST FLOOR LEVEL HAVING BUILDING ACCESS); EXCLUDING ENERGY MANAGEMENT SYSTEMS.) (FOOTNOTE: FIRE ALARM WORK WHEN INSTALLED IN RACEWAYS (INCLUDING WIRE AND CABLE PULLING), ON PROJECTS WHICH INVOLVE NEW OR MAJOR REMODEL BUILDING CONSTRUCTION, FOR WHICH THE CONDUCTORS FOR THE FIRE ALARM SYSTEM ARE INSTALLED IN THE CONDUIT, SHALL BE PERFORMED BY THE INSIDE ELECTRICIAN.) (SAN MATEO COUNTY).....$ 67.08 31.26

ELEC0684-001 12/01/2024

	Rates	Fringes
ELECTRICIAN (MARIPOSA, MERCED, STANISLAUS AND TUOLUMNE COUNTIES) CABLE SPLICER = 110% OF JOURNEYMAN ELECTRICIAN	$ 48.50	30.09

ELEC0684-004 12/01/2024

	Rates	Fringes
COMMUNICATIONS SYSTEM: INSTALLER (SCOPE OF WORK: INCLUDING ANY DATA SYSTEM WHOSE ONLY FUNCTION IS TO TRANSMIT OR RECEIVE INFORMATION; EXCLUDING ALL OTHER DATA SYSTEMS OR MULTIPLE SYSTEMS WHICH INCLUDE CONTROL FUNCTION OR POWER SUPPLY; INCLUSION OR EXCLUSION OF TERMINATIONS AND TESTINGS OF CONDUCTORS DETERMINED BY THEIR FUNCTION; EXCLUDING FIRE ALARM WORK WHEN INSTALLED IN RACEWAYS (INCLUDING WIRE AND CABLE PULLING) AND WHEN PERFORMED ON NEW OR MAJOR REMODEL BUILDING PROJECTS OR JOBS FOR WHICH THE CONDUCTORS FOR THE FIRE ALARM SYSTEM ARE INSTALLED IN CONDUIT; EXCLUDING INSTALLATION OF RACEWAY SYSTEMS, LINE VOLTAGE WORK, INDUSTRIAL WORK, LIFE-SAFETY SYSTEMS (ALL BUILDINGS HAVING FLOORS LOCATED MORE THAN 75' ABOVE THE LOWEST FLOOR LEVEL HAVING BUILDING ACCESS); EXCLUDING ENERGY MANAGEMENT SYSTEMS.) (FOOTNOTE: FIRE ALARM WORK WHEN INSTALLED IN RACEWAYS (INCLUDING WIRE AND CABLE PULLING), ON PROJECTS WHICH INVOLVE NEW OR MAJOR REMODEL BUILDING CONSTRUCTION, FOR WHICH THE CONDUCTORS FOR THE FIRE ALARM SYSTEM ARE INSTALLED IN THE CONDUIT, SHALL BE PERFORMED BY THE INSIDE ELECTRICIAN.) (MARIPOSA, MERCED, STANISLAUS AND TUOLUMNE		

COUNTIES).....$ 45.28 28.01
COMMUNICATIONS SYSTEM: TECHNICIAN (SCOPE OF WORK: INCLUDING ANY DATA SYSTEM WHOSE ONLY FUNCTION IS TO TRANSMIT OR RECEIVE INFORMATION; EXCLUDING ALL OTHER DATA SYSTEMS OR MULTIPLE SYSTEMS WHICH INCLUDE CONTROL FUNCTION OR POWER SUPPLY; INCLUSION OR EXCLUSION OF TERMINATIONS AND TESTINGS OF CONDUCTORS DETERMINED BY THEIR FUNCTION; EXCLUDING FIRE ALARM WORK WHEN INSTALLED IN RACEWAYS (INCLUDING WIRE AND CABLE PULLING) AND WHEN PERFORMED ON NEW OR MAJOR REMODEL BUILDING PROJECTS OR JOBS FOR WHICH THE CONDUCTORS FOR THE FIRE ALARM SYSTEM ARE INSTALLED IN CONDUIT; EXCLUDING INSTALLATION OF RACEWAY SYSTEMS, LINE VOLTAGE WORK, INDUSTRIAL WORK, LIFE-SAFETY SYSTEMS (ALL BUILDINGS HAVING FLOORS LOCATED MORE THAN 75' ABOVE THE LOWEST FLOOR LEVEL HAVING BUILDING ACCESS); EXCLUDING ENERGY MANAGEMENT SYSTEMS.) (FOOTNOTE: FIRE ALARM WORK WHEN INSTALLED IN RACEWAYS (INCLUDING WIRE AND CABLE PULLING), ON PROJECTS WHICH INVOLVE NEW OR MAJOR REMODEL BUILDING CONSTRUCTION, FOR WHICH THE CONDUCTORS FOR THE FIRE ALARM SYSTEM ARE INSTALLED IN THE CONDUIT, SHALL BE PERFORMED BY THE INSIDE ELECTRICIAN.) (MARIPOSA, MERCED, STANISLAUS AND TUOLUMNE COUNTIES).....$ 52.07 28.21

ELEC1245-001 01/01/2025

	Rates	Fringes
LINE CONSTRUCTION: (1) LINEMAN; CABLE SPLICER (HOLIDAYS: NEW YEAR'S DAY, M.L. KING DAY, MEMORIAL DAY, INDEPENDENCE DAY, LABOR DAY, VETERANS DAY, THANKSGIVING DAY AND DAY AFTER THANKSGIVING, CHRISTMAS DAY)	$ 70.16	24.71
LINE CONSTRUCTION: (2) EQUIPMENT SPECIALIST (OPERATES CRAWLER TRACTORS, COMMERCIAL MOTOR VEHICLES, BACKHOES, TRENCHERS, CRANES (50 TONS AND BELOW), OVERHEAD & UNDERGROUND DISTRIBUTION LINE EQUIPMENT) (HOLIDAYS: NEW YEAR'S DAY, M.L. KING DAY, MEMORIAL DAY, INDEPENDENCE DAY, LABOR DAY, VETERANS DAY, THANKSGIVING DAY AND DAY AFTER THANKSGIVING, CHRISTMAS DAY)	$ 53.30	22.26
LINE CONSTRUCTION: (3) GROUNDMAN (HOLIDAYS: NEW YEAR'S DAY, M.L. KING DAY, MEMORIAL DAY, INDEPENDENCE DAY, LABOR DAY, VETERANS DAY, THANKSGIVING DAY AND DAY AFTER THANKSGIVING, CHRISTMAS DAY)	$ 40.76	21.76

ELEV0008-001 01/01/2025

	Rates	Fringes
ELEVATOR MECHANIC (FOOTNOTE: ADD TO FRINGE BENEFITS A+B: A. PAID VACATION: EMPLOYER CONTRIBUTES 8% OF REGULAR HOURLY RATE AS VACATION PAY CREDIT FOR EMPLOYEES WITH MORE THAN 5 YEARS OF SERVICE, AND 6% FOR 6 MONTHS TO 5 YEARS OF SERVICE. B. PAID HOLIDAYS: NEW YEAR'S DAY, MEMORIAL DAY, INDEPENDENCE DAY, LABOR DAY, VETERANS' DAY, THANKSGIVING DAY, FRIDAY AFTER THANKSGIVING, AND CHRISTMAS DAY.)	$ 84.05	38.44

ENGI0003-001 06/29/2020

	Rates	Fringes

OPERATOR: POWER EQUIPMENT, PILEDRIVING: GROUP 1 (LIFTING DEVICES)- DERRICK BARGE PEDESTAL MOUNTED OVER 100 TONS; CLAMSHELL OVER 7 CU. YDS.; SELF-PROPELLED BOOM-TYHPE LIFTING DEVICE OVER 100 TONS; TRUCK CRANE OR CRAWLER, LAND OR BARGE MOUNTED OVER 100 TONS.....$ 52.64 31.15

OPERATOR: POWER EQUIPMENT, PILEDRIVING: GROUP 1 (OILER)- DERRICK BARGE PEDESTAL MOUNTED OVER 100 TONS; CLAMSHELL OVER 7 CU. YDS.; SELF-PROPELLED BOOM-TYHPE LIFTING DEVICE OVER 100 TONS; TRUCK CRANE OR CRAWLER, LAND OR BARGE MOUNTED OVER 100 TONS.....$ 43.38 31.15

OPERATOR: POWER EQUIPMENT, PILEDRIVING: GROUP 1 (TRUCK CRANE OILER)- DERRICK BARGE PEDESTAL MOUNTED OVER 100 TONS; CLAMSHELL OVER 7 CU. YDS.; SELF-PROPELLED BOOM-TYHPE LIFTING DEVICE OVER 100 TONS; TRUCK CRANE OR CRAWLER, LAND OR BARGE MOUNTED OVER 100 TONS.....$ 45.66 31.15

OPERATOR: POWER EQUIPMENT, PILEDRIVING: GROUP 2 (LIFTING DEVICES)- DERRICK BARGE PEDESTAL MOUNTED 45 TONS TO AND INCLUDING 100 TONS; CLAMSHELL UP TO AND INCLUDING 7 CU. YDS.; SELF-PROPELLED BOOM-TYPE LIFTING DEVICE OVER 45 TONS; TRUCK CRANE OR CRAWLER, LAND OR BARGE MOUNTED, OVER 45 TONS UP TO AND INCLUDING 100 TONS; FUNDEX F-12 HYDRAULIC PILE RIG.....$ 50.82 31.15

OPERATOR: POWER EQUIPMENT, PILEDRIVING: GROUP 2 (OILER)- DERRICK BARGE PEDESTAL MOUNTED 45 TONS TO AND INCLUDING 100 TONS; CLAMSHELL UP TO AND INCLUDING 7 CU. YDS.; SELF-PROPELLED BOOM-TYPE LIFTING DEVICE OVER 45 TONS; TRUCK CRANE OR CRAWLER, LAND OR BARGE MOUNTED, OVER 45 TONS UP TO AND INCLUDING 100 TONS; FUNDEX F-12 HYDRAULIC PILE RIG.....$ 43.11 31.15

OPERATOR: POWER EQUIPMENT, PILEDRIVING: GROUP 2 (TRUCK CRANE OILER)- DERRICK BARGE PEDESTAL MOUNTED 45 TONS TO AND INCLUDING 100 TONS; CLAMSHELL UP TO AND INCLUDING 7 CU. YDS.; SELF-PROPELLED BOOM-TYPE LIFTING DEVICE OVER 45 TONS; TRUCK CRANE OR CRAWLER, LAND OR BARGE MOUNTED, OVER 45 TONS UP TO AND INCLUDING 100 TONS; FUNDEX F-12 HYDRAULIC PILE RIG.....$ 45.41 31.15

OPERATOR: POWER EQUIPMENT, PILEDRIVING: GROUP 3 (LIFTING DEVICES)- DERRICK BARGE PEDESTAL MOUNTED UNDER 45 TONS; SELF-PROPELLED BOOM-TYPE LIFTING DEVICE 45 TONS AND UNDER; SKID/SCOW PILEDRIVER, ANY TONNAGE; TRUCK CRANE OR CRAWLER, LAND OR BARGE MOUNTED 45 TONS AND UNDER.....$ 49.14 31.15

OPERATOR: POWER EQUIPMENT, PILEDRIVING: GROUP 3 (OILER)- DERRICK BARGE PEDESTAL MOUNTED UNDER 45 TONS; SELF-PROPELLED BOOM-TYPE LIFTING DEVICE 45 TONS AND UNDER; SKID/SCOW PILEDRIVER, ANY TONNAGE; TRUCK CRANE OR CRAWLER, LAND OR BARGE MOUNTED 45 TONS AND UNDER.....$ 42.89 31.15

OPERATOR: POWER EQUIPMENT, PILEDRIVING: GROUP 3 (TRUCK CRANE OILER)- DERRICK BARGE PEDESTAL MOUNTED UNDER 45 TONS; SELF-PROPELLED BOOM-TYPE LIFTING DEVICE 45 TONS AND UNDER; SKID/SCOW PILEDRIVER, ANY TONNAGE; TRUCK CRANE OR CRAWLER, LAND OR BARGE MOUNTED 45 TONS AND UNDER.....$ 45.12 31.15

OPERATOR: POWER EQUIPMENT, PILEDRIVING: GROUP 4 (LIFTING DEVICES)- ASSISTANT OPERATOR IN LIEU OF ASSISTANT TO ENGINEER; FORKLIFT, 10 TONS AND OVER; HEAVY-DUTY REPAIR PERSON/WELDER.....$ 47.37 31.15

OPERATOR: POWER EQUIPMENT, PILEDRIVING: GROUP 5

(LIFTING DEVICES)- DECK ENGINEER.....$ 44.73 31.15
OPERATOR: POWER EQUIPMENT, PILEDRIVING: GROUP 6
(LIFTING DEVICES)- DECKHAND; FIRE TENDER.....$ 42.50 31.15

ENGI0003-001 06/30/2025

	Rates	Fringes
OPERATOR: POWER EQUIPMENT- CRANES AND ATTACHMENTS - AREA 1: GROUP 1 (CRANES)- CLAMSHELL AND DRAGLINE OVER 7 CU. YDS.; CRANE, OVER 100 TONS; DERRICK, OVER 100 TONS; DERRICK BARGE PEDESTAL-MOUNTED, OVER 100 TONS; SELF-PROPELLED BOOM-TYPE LIFTING DEVICE, OVER 100 TONS. (AREA 1: LISTED WAGE RATES. AREA 2: RECEIVES AN ADDITIONAL $2.00 PER HOUR ABOVE AREA 1 RATES.) (AREA 1: ALAMEDA, CALAVERAS (EXCEPT EASTERN PART), CONTRA COSTA, FRESNO (EXCEPT EASTERN PART), KINGS, MADERA (EXCEPT EASTERN PART), MARIPOSA (EXCEPT EASTERN PART), MERCED, MONTEREY (EXCEPT SOUTHWESTERN PART), SAN BENITO, SAN FANCISCO, SAN JOAQUIN, SAN MATEO, SANTA CLARA, SANTA CRUZ, STANISLAUS, TUOLUMNE (EXCEPT EASTERN PART) COUNTIES. AREA 2: CALAVERAS (EASTERN PART), FRESNO (EASTERN PART), MADERA (EASTERN PART), MARIPOSA (EASTERN PART), MONTEREY (SOUTHWESTERN PART), TUOLUMNE (EASTERN PART) COUNTIES).....	$ 68.59	32.53
OPERATOR: POWER EQUIPMENT- CRANES AND ATTACHMENTS - AREA 1: GROUP 1 (OILER)- CLAMSHELL AND DRAGLINE OVER 7 CU. YDS.; CRANE, OVER 100 TONS; DERRICK, OVER 100 TONS; DERRICK BARGE PEDESTAL-MOUNTED, OVER 100 TONS; SELF-PROPELLED BOOM-TYPE LIFTING DEVICE, OVER 100 TONS. (AREA 1: LISTED WAGE RATES. AREA 2: RECEIVES AN ADDITIONAL $2.00 PER HOUR ABOVE AREA 1 RATES.) (AREA 1: ALAMEDA, CALAVERAS (EXCEPT EASTERN PART), CONTRA COSTA, FRESNO (EXCEPT EASTERN PART), KINGS, MADERA (EXCEPT EASTERN PART), MARIPOSA (EXCEPT EASTERN PART), MERCED, MONTEREY (EXCEPT SOUTHWESTERN PART), SAN BENITO, SAN FANCISCO, SAN JOAQUIN, SAN MATEO, SANTA CLARA, SANTA CRUZ, STANISLAUS, TUOLUMNE (EXCEPT EASTERN PART) COUNTIES. AREA 2: CALAVERAS (EASTERN PART), FRESNO (EASTERN PART), MADERA (EASTERN PART), MARIPOSA (EASTERN PART), MONTEREY (SOUTHWESTERN PART), TUOLUMNE (EASTERN PART) COUNTIES).....	$ 43.79	31.15
OPERATOR: POWER EQUIPMENT- CRANES AND ATTACHMENTS - AREA 1: GROUP 1 (TRUCK CRANE OILER)- CLAMSHELL AND DRAGLINE OVER 7 CU. YDS.; CRANE, OVER 100 TONS; DERRICK, OVER 100 TONS; DERRICK BARGE PEDESTAL-MOUNTED, OVER 100 TONS; SELF-PROPELLED BOOM-TYPE LIFTING DEVICE, OVER 100 TONS. (AREA 1: LISTED WAGE RATES. AREA 2: RECEIVES AN ADDITIONAL $2.00 PER HOUR ABOVE AREA 1 RATES.) (AREA 1: ALAMEDA, CALAVERAS (EXCEPT EASTERN PART), CONTRA COSTA, FRESNO (EXCEPT EASTERN PART), KINGS, MADERA (EXCEPT EASTERN PART), MARIPOSA (EXCEPT EASTERN PART), MERCED, MONTEREY (EXCEPT SOUTHWESTERN PART), SAN BENITO, SAN FANCISCO, SAN JOAQUIN, SAN MATEO, SANTA CLARA, SANTA CRUZ, STANISLAUS, TUOLUMNE (EXCEPT EASTERN PART) COUNTIES. AREA 2: CALAVERAS (EASTERN PART), FRESNO (EASTERN PART), MADERA (EASTERN PART), MARIPOSA (EASTERN PART), MONTEREY (SOUTHWESTERN PART), TUOLUMNE (EASTERN PART) COUNTIES).....	$ 46.08	31.15
OPERATOR: POWER EQUIPMENT- CRANES AND ATTACHMENTS - AREA 1: GROUP 2 (CRANES)- CLAMSHELL AND DRAGLINE OVER 1 CU. YD. UP TO AND INCLUDING 7 CU. YDS.;		

CRANE, OVER 45 TONS UP TO AND INCLUDING 100 TONS; DERRICK BARGE, 100 TONS AND UNDER; SELF-PROPELLED BOOM-TYPE LIFTING DEVICE, OVER 45 TONS; TOWER CRANE. (AREA 1: LISTED WAGE RATES. AREA 2: RECEIVES AN ADDITIONAL $2.00 PER HOUR ABOVE AREA 1 RATES.) (AREA 1: ALAMEDA, CALAVERAS (EXCEPT EASTERN PART), CONTRA COSTA, FRESNO (EXCEPT EASTERN PART), KINGS, MADERA (EXCEPT EASTERN PART), MARIPOSA (EXCEPT EASTERN PART), MERCED, MONTEREY (EXCEPT SOUTHWESTERN PART), SAN BENITO, SAN FANCISCO, SAN JOAQUIN, SAN MATEO, SANTA CLARA, SANTA CRUZ, STANISLAUS, TUOLUMNE (EXCEPT EASTERN PART) COUNTIES. AREA 2: CALAVERAS (EASTERN PART), FRESNO (EASTERN PART), MADERA (EASTERN PART), MARIPOSA (EASTERN PART), MONTEREY (SOUTHWESTERN PART), TUOLUMNE (EASTERN PART) COUNTIES).....$ 66.08 32.53

OPERATOR: POWER EQUIPMENT- CRANES AND ATTACHMENTS - AREA 1: GROUP 2 (OILER)- CLAMSHELL AND DRAGLINE OVER 1 CU. YD. UP TO AND INCLUDING 7 CU. YDS.; CRANE, OVER 45 TONS UP TO AND INCLUDING 100 TONS; DERRICK BARGE, 100 TONS AND UNDER; SELF-PROPELLED BOOM-TYPE LIFTING DEVICE, OVER 45 TONS; TOWER CRANE. (AREA 1: LISTED WAGE RATES. AREA 2: RECEIVES AN ADDITIONAL $2.00 PER HOUR ABOVE AREA 1 RATES.) (AREA 1: ALAMEDA, CALAVERAS (EXCEPT EASTERN PART), CONTRA COSTA, FRESNO (EXCEPT EASTERN PART), KINGS, MADERA (EXCEPT EASTERN PART), MARIPOSA (EXCEPT EASTERN PART), MERCED, MONTEREY (EXCEPT SOUTHWESTERN PART), SAN BENITO, SAN FANCISCO, SAN JOAQUIN, SAN MATEO, SANTA CLARA, SANTA CRUZ, STANISLAUS, TUOLUMNE (EXCEPT EASTERN PART) COUNTIES. AREA 2: CALAVERAS (EASTERN PART), FRESNO (EASTERN PART), MADERA (EASTERN PART), MARIPOSA (EASTERN PART), MONTEREY (SOUTHWESTERN PART), TUOLUMNE (EASTERN PART) COUNTIES).....$ 42.83 31.15

OPERATOR: POWER EQUIPMENT- CRANES AND ATTACHMENTS - AREA 1: GROUP 2 (TRUCK CRANE OILER)- CLAMSHELL AND DRAGLINE OVER 1 CU. YD. UP TO AND INCLUDING 7 CU. YDS.; CRANE, OVER 45 TONS UP TO AND INCLUDING 100 TONS; DERRICK BARGE, 100 TONS AND UNDER; SELF-PROPELLED BOOM-TYPE LIFTING DEVICE, OVER 45 TONS; TOWER CRANE. (AREA 1: LISTED WAGE RATES. AREA 2: RECEIVES AN ADDITIONAL $2.00 PER HOUR ABOVE AREA 1 RATES.) (AREA 1: ALAMEDA, CALAVERAS (EXCEPT EASTERN PART), CONTRA COSTA, FRESNO (EXCEPT EASTERN PART), KINGS, MADERA (EXCEPT EASTERN PART), MARIPOSA (EXCEPT EASTERN PART), MERCED, MONTEREY (EXCEPT SOUTHWESTERN PART), SAN BENITO, SAN FANCISCO, SAN JOAQUIN, SAN MATEO, SANTA CLARA, SANTA CRUZ, STANISLAUS, TUOLUMNE (EXCEPT EASTERN PART) COUNTIES. AREA 2: CALAVERAS (EASTERN PART), FRESNO (EASTERN PART), MADERA (EASTERN PART), MARIPOSA (EASTERN PART), MONTEREY (SOUTHWESTERN PART), TUOLUMNE (EASTERN PART) COUNTIES).....$ 45.07 31.15

OPERATOR: POWER EQUIPMENT- CRANES AND ATTACHMENTS - AREA 1: GROUP 3 (CRANES) CLAMSHELL AND DRAGLINE UP TO AND INCLUDING 1 CU. YD.; CRANES 45 TONS AND UNDER; SELF-PROPELLED BOOM-TYPE LIFTING DEVICE 45 TONS AND UNDER. (AREA 1: LISTED WAGE RATES. AREA 2: RECEIVES AN ADDITIONAL $2.00 PER HOUR ABOVE AREA 1 RATES.) (AREA 1: ALAMEDA, CALAVERAS (EXCEPT EASTERN PART), CONTRA COSTA, FRESNO (EXCEPT EASTERN PART), KINGS, MADERA (EXCEPT EASTERN PART), MARIPOSA (EXCEPT EASTERN PART), MERCED, MONTEREY (EXCEPT SOUTHWESTERN PART), SAN BENITO, SAN FANCISCO, SAN

JOAQUIN, SAN MATEO, SANTA CLARA, SANTA CRUZ, STANISLAUS, TUOLUMNE (EXCEPT EASTERN PART) COUNTIES. AREA 2: CALAVERAS (EASTERN PART), FRESNO (EASTERN PART), MADERA (EASTERN PART), MARIPOSA (EASTERN PART), MONTEREY (SOUTHWESTERN PART), TUOLUMNE (EASTERN PART) COUNTIES).....$ 64.34 32.53

OPERATOR: POWER EQUIPMENT- CRANES AND ATTACHMENTS - AREA 1: GROUP 3 (HYDRAULIC) CLAMSHELL AND DRAGLINE UP TO AND INCLUDING 1 CU. YD.; CRANES 45 TONS AND UNDER; SELF-PROPELLED BOOM-TYPE LIFTING DEVICE 45 TONS AND UNDER. (AREA 1: LISTED WAGE RATES. AREA 2: RECEIVES AN ADDITIONAL $2.00 PER HOUR ABOVE AREA 1 RATES.) (AREA 1: ALAMEDA, CALAVERAS (EXCEPT EASTERN PART), CONTRA COSTA, FRESNO (EXCEPT EASTERN PART), KINGS, MADERA (EXCEPT EASTERN PART), MARIPOSA (EXCEPT EASTERN PART), MERCED, MONTEREY (EXCEPT SOUTHWESTERN PART), SAN BENITO, SAN FANCISCO, SAN JOAQUIN, SAN MATEO, SANTA CLARA, SANTA CRUZ, STANISLAUS, TUOLUMNE (EXCEPT EASTERN PART) COUNTIES. AREA 2: CALAVERAS (EASTERN PART), FRESNO (EASTERN PART), MADERA (EASTERN PART), MARIPOSA (EASTERN PART), MONTEREY (SOUTHWESTERN PART), TUOLUMNE (EASTERN PART) COUNTIES).....$ 59.98 32.53

OPERATOR: POWER EQUIPMENT- CRANES AND ATTACHMENTS - AREA 1: GROUP 3 (OILER) CLAMSHELL AND DRAGLINE UP TO AND INCLUDING 1 CU. YD.; CRANES 45 TONS AND UNDER; SELF-PROPELLED BOOM-TYPE LIFTING DEVICE 45 TONS AND UNDER. (AREA 1: LISTED WAGE RATES. AREA 2: RECEIVES AN ADDITIONAL $2.00 PER HOUR ABOVE AREA 1 RATES.) (AREA 1: ALAMEDA, CALAVERAS (EXCEPT EASTERN PART), CONTRA COSTA, FRESNO (EXCEPT EASTERN PART), KINGS, MADERA (EXCEPT EASTERN PART), MARIPOSA (EXCEPT EASTERN PART), MERCED, MONTEREY (EXCEPT SOUTHWESTERN PART), SAN BENITO, SAN FANCISCO, SAN JOAQUIN, SAN MATEO, SANTA CLARA, SANTA CRUZ, STANISLAUS, TUOLUMNE (EXCEPT EASTERN PART) COUNTIES. AREA 2: CALAVERAS (EASTERN PART), FRESNO (EASTERN PART), MADERA (EASTERN PART), MARIPOSA (EASTERN PART), MONTEREY (SOUTHWESTERN PART), TUOLUMNE (EASTERN PART) COUNTIES).....$ 42.55 31.15

OPERATOR: POWER EQUIPMENT- CRANES AND ATTACHMENTS - AREA 1: GROUP 3 (TRUCK CRANE OILER) CLAMSHELL AND DRAGLINE UP TO AND INCLUDING 1 CU. YD.; CRANES 45 TONS AND UNDER; SELF-PROPELLED BOOM-TYPE LIFTING DEVICE 45 TONS AND UNDER. (AREA 1: LISTED WAGE RATES. AREA 2: RECEIVES AN ADDITIONAL $2.00 PER HOUR ABOVE AREA 1 RATES.) (AREA 1: ALAMEDA, CALAVERAS (EXCEPT EASTERN PART), CONTRA COSTA, FRESNO (EXCEPT EASTERN PART), KINGS, MADERA (EXCEPT EASTERN PART), MARIPOSA (EXCEPT EASTERN PART), MERCED, MONTEREY (EXCEPT SOUTHWESTERN PART), SAN BENITO, SAN FANCISCO, SAN JOAQUIN, SAN MATEO, SANTA CLARA, SANTA CRUZ, STANISLAUS, TUOLUMNE (EXCEPT EASTERN PART) COUNTIES. AREA 2: CALAVERAS (EASTERN PART), FRESNO (EASTERN PART), MADERA (EASTERN PART), MARIPOSA (EASTERN PART), MONTEREY (SOUTHWESTERN PART), TUOLUMNE (EASTERN PART) COUNTIES).....$ 44.83 31.15

OPERATOR: POWER EQUIPMENT- CRANES AND ATTACHMENTS - AREA 1: GROUP 4 (CRANES)- BOOM TRUCK OR DUAL PURPOSE A-FRAME TRUCK, NON-ROTATING OVER 15 TONS; TRUCK-MOUNTED ROTATING TELESCOPIC BOOM TYPE LIFTING DEVICE, MANITEX OR SIMILAR (BOOM TRUCK) OVER 15 TONS. (AREA 1: LISTED WAGE RATES. AREA 2: RECEIVES

AN ADDITIONAL $2.00 PER HOUR ABOVE AREA 1 RATES.)
(AREA 1: ALAMEDA, CALAVERAS (EXCEPT EASTERN PART),
CONTRA COSTA, FRESNO (EXCEPT EASTERN PART), KINGS,
MADERA (EXCEPT EASTERN PART), MARIPOSA (EXCEPT
EASTERN PART), MERCED, MONTEREY (EXCEPT
SOUTHWESTERN PART), SAN BENITO, SAN FANCISCO, SAN
JOAQUIN, SAN MATEO, SANTA CLARA, SANTA CRUZ,
STANISLAUS, TUOLUMNE (EXCEPT EASTERN PART)
COUNTIES. AREA 2: CALAVERAS (EASTERN PART), FRESNO
(EASTERN PART), MADERA (EASTERN PART), MARIPOSA
(EASTERN PART), MONTEREY (SOUTHWESTERN PART),
TUOLUMNE (EASTERN PART) COUNTIES).....$ 61.30 32.53
OPERATOR: POWER EQUIPMENT, AREA 1: GROUP 2-
HIGHLINE CABLEWAY; HYDRAULIC EXCAVATOR, 3.5 CU.
YDS. UP TO 7 CU. YDS.; LICENSED CONSTRUCTION WORK
BOAT OPERATOR, ON SITE; POWER BLADE OPERATOR
(FINISH); POWER SHOVELS, OVER 1 CU. YD. UP TO AN
DINCLUDING 7 CU. YDS. M.R.C. (AREA 1: LISTED WAGE
RATES. AREA 2: RECEIVES AN ADDITIONAL $2.00 PER
HOUR ABOVE AREA 1 RATES.) (AREA 1: ALAMEDA,
CALAVERAS (EXCEPT EASTERN PART), CONTRA COSTA,
FRESNO (EXCEPT EASTERN PART), KINGS, MADERA (EXCEPT
EASTERN PART), MARIPOSA (EXCEPT EASTERN PART),
MERCED, MONTEREY (EXCEPT SOUTHWESTERN PART), SAN
BENITO, SAN FANCISCO, SAN JOAQUIN, SAN MATEO, SANTA
CLARA, SANTA CRUZ, STANISLAUS, TUOLUMNE (EXCEPT
EASTERN PART) COUNTIES. AREA 2: CALAVERAS (EASTERN
PART), FRESNO (EASTERN PART), MADERA (EASTERN
PART), MARIPOSA (EASTERN PART), MONTEREY
(SOUTHWESTERN PART), TUOLUMNE (EASTERN PART)
COUNTIES).....$ 65.43 32.53
OPERATOR: POWER EQUIPMENT, AREA 1: GROUP 3-
ASPHALT MILLING MACHINE; CABLE BACKHOE; COMBINATION
BACKHOE AND LOADER OVER 3/4 CU. YDS.; CONTINUOUS
FLIGHT TIE BACK MACHINE ASSISTNAT TO ENGINEER OR
MECHANIC; CRANE MOUNTED CONTINUOUS FLIGHT TIE BACK
MACHINE, TONNAGE TO APPLY; CRANE MOUNTED DRILL
ATTACHMENT, TONNAGE TO APPLY; DOZER, SLOPE BRD;
GRADALL; HYDRAULIC EXCAVATOR, UP TO 3.5 CU. YDS.;
LOADER 4 CU. YDS. AND OVER; LONG REACH EXCAVATOR;
MULTIPLE ENGINE SCRAPER (WHEN USED AS PUSH PULL);
POWER SHOVELS, UP TO AND INCLUDING 1 CU. YD.;
PRE-STRESS WIRE WRAPPING MACHINE; SIDE BOOM CAT,
572 OR LARGER; TRACK LOADER 4 CU. YDS. AND OVER;
WHEEL EXCAVATOR (UP TO AND INCLUDING 750 CU. YDS.
PER HOUR) (AREA 1: LISTED WAGE RATES. AREA 2:
RECEIVES AN ADDITIONAL $2.00 PER HOUR ABOVE AREA 1
RATES.) (AREA 1: ALAMEDA, CALAVERAS (EXCEPT EASTERN
PART), CONTRA COSTA, FRESNO (EXCEPT EASTERN PART),
KINGS, MADERA (EXCEPT EASTERN PART), MARIPOSA
(EXCEPT EASTERN PART), MERCED, MONTEREY (EXCEPT
SOUTHWESTERN PART), SAN BENITO, SAN FANCISCO, SAN
JOAQUIN, SAN MATEO, SANTA CLARA, SANTA CRUZ,
STANISLAUS, TUOLUMNE (EXCEPT EASTERN PART)
COUNTIES. AREA 2: CALAVERAS (EASTERN PART), FRESNO
(EASTERN PART), MADERA (EASTERN PART), MARIPOSA
(EASTERN PART), MONTEREY (SOUTHWESTERN PART),
TUOLUMNE (EASTERN PART) COUNTIES).....$ 63.95 32.53
OPERATOR: POWER EQUIPMENT, AREA 1: GROUP 4-
ASPHALT PLANT ENGINEER/BOX PERSON; CHICAGO BOOM;
COMBINATION BACKHOE AND LOADER UP TO AND INCLUDING
.75 CU. YD.; CONCRETE BATCH PLANT (WET OR DRY);
DOZER AND/OR PUSH CAT; PULL-TYPE ELEVATING LOADER;
GRADESETTER, GRADE CHECKER (GPS, MECHANICAL OR
OTHERWISE); GROOVING AND GRINDING MACHINE; HEADING

SHIELD OPERATOR; HEAVY-DUTY DRILLING EQUIPMENT, HUGHS, LDH, WATSON 3000 OR SIMILAR; HEAVY-DUTY REPAIRPERSON AND/OR WELDER; LIME SPREADER; LOADER UNDER 4 CU. YDS.; LUBRICATION AND SERVICE ENGINEER (MOBILE AND GREASE RACK); MECHANICAL FINISHERS OR SPREADER MACHINE (ASPHALT, BARBER-GREENE AND SIMILAR); MILLER FORMLESS M-9000 SLOPE PAVER OR SIMILAR; PORTABLE CRUSHING AND SCREENING PLANTS; POWER BLADE SUPPORT; ROLLER OPERATOR, ASPHALT; RUBBER-TIRED SCRAPER, SELF-LOADING (PADDLE-WHEELS, ETC.); RUBBER-TIRED EARTHMOVING EQUIPMENT (SCRAPERS); SLIP FORM PAVER (CONCRETE); SMALL TRACTOR WITH DRAG; SOIL STABILIZER (P&H OR EQUAL); SPIDER PLOW AND SPIDER PULLER; TUBEX PILE RIG; UNLICENSED CONSTRUCTION WORK BOAT OPERATOR, ON SITE; TIMBER SKIDDER; TRACK LOADER UP TO 4 YDS.; TRACTOR-DRAWN SCRAPER; TRACTOR, COMPRESSOR DRILL COMBINATION; WELDER; WOODS-MIXER (AND OTHER SIMILAR PUGMILL EQUIPMENT. (AREA 1: LISTED WAGE RATES. AREA 2: RECEIVES AN ADDITIONAL $2.00 PER HOUR ABOVE AREA 1 RATES.) (AREA 1: ALAMEDA, CALAVERAS (EXCEPT EASTERN PART), CONTRA COSTA, FRESNO (EXCEPT EASTERN PART), KINGS, MADERA (EXCEPT EASTERN PART), MARIPOSA (EXCEPT EASTERN PART), MERCED, MONTEREY (EXCEPT SOUTHWESTERN PART), SAN BENITO, SAN FANCISCO, SAN JOAQUIN, SAN MATEO, SANTA CLARA, SANTA CRUZ, STANISLAUS, TUOLUMNE (EXCEPT EASTERN PART) COUNTIES. AREA 2: CALAVERAS (EASTERN PART), FRESNO (EASTERN PART), MADERA (EASTERN PART), MARIPOSA (EASTERN PART), MONTEREY (SOUTHWESTERN PART), TUOLUMNE (EASTERN PART) COUNTIES).....$ 62.57 32.53

OPERATOR: POWER EQUIPMENT, AREA 1: GROUP 5- CAST-IN-PLACE PIPE LAYING MACHINE; COMBINATION SLUSHER AND MOTOR OPERATOR; CONCRETE CONVEYOR OR CONCRETE PUMP, TRUCK OR EQUIPMENT MOUNTED; CONCRETE CONVEYOR, BUILDING SITE; CONCRETE PUMP OR PUMPCRETE GUN; DRILLING EQUIPMENT, WATSON 2000, TEXOMA 700 OR SIMILAR; DRILLING AND BORING MACHINERY, HORIZONTAL (NOT TO APPLY TO WATERLINES, WAGON DRILLS, OR JACKHAMMERS); CONCRETE MIXER/ALL; PERSON AND/OR MATERIAL HOIST; MECHANICAL FINISHERS (CONCRETE (CLARY, JOHNSON, BIDWELL BRIDGE DECK, OR SIMILAR TYPES); MECHANICAL BURM, CURB, AND/OR CURB AND GUTTER MACHINE, CONCRETE OR ASPHALT); MINE OR SHAFT HOIST; PORTABLE CRUSHER; POWER JUMBO OPERATOR (SETTING SLIP-FORMS, ETC., IN TUNNELS); SCREED (AUTOMATIC OR MANUAL); SELF-PROPELLED COMPACTOR WITH DOZER; TRACTOR WITH BOOM D6 OR SMALLER; TRENCHING MACHINE, MAXIMUM DIGGING CAPACITY OVER 5 FT. DEPTH; VERMEER T-600B ROCK CUTTER OR SIMILAR. (AREA 1: LISTED WAGE RATES. AREA 2: RECEIVES AN ADDITIONAL $2.00 PER HOUR ABOVE AREA 1 RATES.) (AREA 1: ALAMEDA, CALAVERAS (EXCEPT EASTERN PART), CONTRA COSTA, FRESNO (EXCEPT EASTERN PART), KINGS, MADERA (EXCEPT EASTERN PART), MARIPOSA (EXCEPT EASTERN PART), MERCED, MONTEREY (EXCEPT SOUTHWESTERN PART), SAN BENITO, SAN FANCISCO, SAN JOAQUIN, SAN MATEO, SANTA CLARA, SANTA CRUZ, STANISLAUS, TUOLUMNE (EXCEPT EASTERN PART) COUNTIES. AREA 2: CALAVERAS (EASTERN PART), FRESNO (EASTERN PART), MADERA (EASTERN PART), MARIPOSA (EASTERN PART), MONTEREY (SOUTHWESTERN PART), TUOLUMNE (EASTERN PART) COUNTIES).....$ 61.30 32.53

OPERATOR: POWER EQUIPMENT, AREA 1: GROUP 6- ARMOR-COATER (OR SIMILAR); BALLAST JACK TAMPER;

BOOM-TYPE BACKFILLING MACHINE; ASSISTANT PLANT ENGINEER; BRIDGE AND/OR GANTRY CRANE; CHEMICAL GROUTING MACHINE, TRUCK-MOUNTED; CHIP SPREADING MACHINE OPERATOR; CONCRETE SAW (SELF-PROPELLED UNIT ON STREETS, HIGHWAYS, AIRPORTS, AND CANALS); DECK ENGINEER; DRILLING EQUIPMENT TEXOMA 600, HUGHS 200 SERIES OR SIMILAR UP TO AND INCLUDING 30 FT. M.R.C.; DRILL DOCTOR; HELICOPTER RADIO OPERATOR; HYDRO-HAMMER OR SIMILAR; LINE MASTER; SKIDSTEER LOADER, BOBCAT LARGER THAN 743 SERIES OR SIMILAR (WITH ATTACHMENTS); LOCOMOTIVE; LULL HI-LIFT OR SIMILAR; OILER, TRUCK MOUNTED; PAVEMENT BREAKER, TRUCK-MOUNTED, WITH COMPRESSOR COMBINATION; PAVING FABRIC INSTALLATION AND/OR LAYING MACHINE; PIPE BENDING MACHINE (PIPELINES ONLY); PIPE WRAPPING MACHINE (TRACTOR PRPELLED AND SUPPORTED); SCREED (EXCEPT ASPHALTIC CONCRETE PAVING); SELF-PROPELLED PIPELINE WRAPPING MACHINE; TRACTOR; SELF-LOADING CHIPPER; CONCRETE BARRIER MOVING MACHINE. (AREA 1: LISTED WAGE RATES. AREA 2: RECEIVES AN ADDITIONAL $2.00 PER HOUR ABOVE AREA 1 RATES.) (AREA 1: ALAMEDA, CALAVERAS (EXCEPT EASTERN PART), CONTRA COSTA, FRESNO (EXCEPT EASTERN PART), KINGS, MADERA (EXCEPT EASTERN PART), MARIPOSA (EXCEPT EASTERN PART), MERCED, MONTEREY (EXCEPT SOUTHWESTERN PART), SAN BENITO, SAN FANCISCO, SAN JOAQUIN, SAN MATEO, SANTA CLARA, SANTA CRUZ, STANISLAUS, TUOLUMNE (EXCEPT EASTERN PART) COUNTIES. AREA 2: CALAVERAS (EASTERN PART), FRESNO (EASTERN PART), MADERA (EASTERN PART), MARIPOSA (EASTERN PART), MONTEREY (SOUTHWESTERN PART), TUOLUMNE (EASTERN PART) COUNTIES).....$ 59.98 32.53

OPERATOR: POWER EQUIPMENT, AREA 1: GROUP 7- BALLAST REGULATOR; BOOM TRUCK OR DUAL-PURPOSE A-FRAME TRUCK, NON-ROTATING-UNDER 15 TONS; CARY IFT OR SIMILAR; COMBINATION SLURRY MIER AND/OR CLEANER; DRILLING EQUIPMENT, 20 FT AND UNDER M.R.C.; FIRETENDER (HOT PLANT); GROUTING MACHINE OPERATOR; HIGHLINE CABLEWAY SIGNALPERSON; STATIONARY BELT LOADER (KOLMAN OR SIMILAR); LIFT SLAB MACHINE (VAGTBORG AND SIMILAR TYPES); MAGINNES INTERNAL FULL SLAB VIBRATOR; MATERIAL HOIST (1 DRUM); MECHANICAL TRENCH SHIELD; PAVEMENT BREAKER WITH OR WITHOUT COMPRESSOR COMBINATION); PIPE CLEANING MACHINE (TRACTOR PROPELLED AND SUPPORTED); POST DRIVER; ROLLER (EXCEPT ASPHALT); CHIP SEAL; SELF-PROPELLED AUTOMATICALLY APPLIED CONCRETE CURING MACHINE (ON STREETS, HIGHWAYS, AIRPORTS, AND CANALS); SELF-PROPELLED COMPACTOR (WITHOUT DOZER); SIGNALPERSON; SLIP-FORM PUMPS (LIFTING DEVICE FOR CONCRETE FORMS); TIE SPACE; TOWER MOBILE; TRENCHING MACHINE, MAXIMUM DIGGING CAPACITY UP TO AND INCLUDING 5 FT. DEPTH; TRUCK-TYPE LOADER. (AREA 1: LISTED WAGE RATES. AREA 2: RECEIVES AN ADDITIONAL $2.00 PER HOUR ABOVE AREA 1 RATES.) (AREA 1: ALAMEDA, CALAVERAS (EXCEPT EASTERN PART), CONTRA COSTA, FRESNO (EXCEPT EASTERN PART), KINGS, MADERA (EXCEPT EASTERN PART), MARIPOSA (EXCEPT EASTERN PART), MERCED, MONTEREY (EXCEPT SOUTHWESTERN PART), SAN BENITO, SAN FANCISCO, SAN JOAQUIN, SAN MATEO, SANTA CLARA, SANTA CRUZ, STANISLAUS, TUOLUMNE (EXCEPT EASTERN PART) COUNTIES. AREA 2: CALAVERAS (EASTERN PART), FRESNO (EASTERN PART), MADERA (EASTERN PART), MARIPOSA (EASTERN PART), MONTEREY (SOUTHWESTERN PART), TUOLUMNE (EASTERN PART)

COUNTIES).....$ 58.84 32.53
OPERATOR: POWER EQUIPMENT, AREA 1: GROUP 8- BIT SHARPENER; BOILER TENDER; BOX OPERATOR; BRAKEPERSON; COMBINATION MIXER AND COMPRESSOR (SHOTCRETE/GUNITE); COMPRESSOR OPERATOR; DECKHAND; FIRE TENDER; FORKLIFT (UNDER 20 FT); GENERATOR; GUNITE/SHOTCRETE EQUIPMENT OPERATOR; HYDRAULIC MONITOR; KEN SEAL MACHINE (OR SIMILAR); MIXERMOBILE; OILER; PUMPOPERATOR; REFRIGERATOR PLANT; RESERVOIR-DEBRIS TUG (SELF-PROPELLED FLOATING); ROSS CARRIER (CONSTRUCTION SITE); ROTOMIST OPERATOR; SELF-PROPELLED TAPE MACHINE; SHUTTLECAR; SELF-PROPELLED POWER SWEEPER OPERATOR (INCLUDES VACUUM SWEEPER); SLUSHER OPERATOR; SURFACE HEATER; SWITCHPERSON; TAR POT FIRETENDER; TUGGER HOIST, SINGLE DRUM; VACUUM COOLING PLANT; WELDING MACHINE (POWERED OTHER THAN BY ELECTRICITY. (AREA 1: LISTED WAGE RATES. AREA 2: RECEIVES AN ADDITIONAL $2.00 PER HOUR ABOVE AREA 1 RATES.) (AREA 1: ALAMEDA, CALAVERAS (EXCEPT EASTERN PART), CONTRA COSTA, FRESNO (EXCEPT EASTERN PART), KINGS, MADERA (EXCEPT EASTERN PART), MARIPOSA (EXCEPT EASTERN PART), MERCED, MONTEREY (EXCEPT SOUTHWESTERN PART), SAN BENITO, SAN FANCISCO, SAN JOAQUIN, SAN MATEO, SANTA CLARA, SANTA CRUZ, STANISLAUS, TUOLUMNE (EXCEPT EASTERN PART) COUNTIES. AREA 2: CALAVERAS (EASTERN PART), FRESNO (EASTERN PART), MADERA (EASTERN PART), MARIPOSA (EASTERN PART), MONTEREY (SOUTHWESTERN PART), TUOLUMNE (EASTERN PART) COUNTIES).....$ 57.70 32.53
OPERATOR: POWER EQUIPMENT, AREA 1: GROUP 8-A - ELEVATOR OPERATOR; SKIDSTEER LOADER-BOBCAT 743 SERIES OR SMALLER, AND SIMILAR (WITHOUT ATTACHMENTS); MINI EXCAVATOR UNDER 25 H.P. (BACKHOE-TRENCHER); TUB GRINDER WOOD CHIPPER. (AREA 1: LISTED WAGE RATES. AREA 2: RECEIVES AN ADDITIONAL $2.00 PER HOUR ABOVE AREA 1 RATES.) (AREA 1: ALAMEDA, CALAVERAS (EXCEPT EASTERN PART), CONTRA COSTA, FRESNO (EXCEPT EASTERN PART), KINGS, MADERA (EXCEPT EASTERN PART), MARIPOSA (EXCEPT EASTERN PART), MERCED, MONTEREY (EXCEPT SOUTHWESTERN PART), SAN BENITO, SAN FANCISCO, SAN JOAQUIN, SAN MATEO, SANTA CLARA, SANTA CRUZ, STANISLAUS, TUOLUMNE (EXCEPT EASTERN PART) COUNTIES. AREA 2: CALAVERAS (EASTERN PART), FRESNO (EASTERN PART), MADERA (EASTERN PART), MARIPOSA (EASTERN PART), MONTEREY (SOUTHWESTERN PART), TUOLUMNE (EASTERN PART) COUNTIES).....$ 55.49 32.53
OPERATOR: POWER EQUIPMENT, STEEL ERECTION: GROUP 1 (CRANES)- CRANE OVER 100 TONS; DERRICK OVER 100 TONS; SELF-PROPELLED BOOM-TYPE LIFTING DEVICE OVER 100 TONS.....$ 68.81 32.53
OPERATOR: POWER EQUIPMENT, STEEL ERECTION: GROUP 1 (OILER)- CRANE OVER 100 TONS; DERRICK OVER 100 TONS; SELF-PROPELLED BOOM-TYPE LIFTING DEVICE OVER 100 TONS.....$ 43.72 31.15
OPERATOR: POWER EQUIPMENT, STEEL ERECTION: GROUP 1 (TRUCK CRANE OILER)- CRANE OVER 100 TONS; DERRICK OVER 100 TONS; SELF-PROPELLED BOOM-TYPE LIFTING DEVICE OVER 100 TONS.....$ 45.95 31.15
OPERATOR: POWER EQUIPMENT, STEEL ERECTION: GROUP 2 (CRANES)- CRANE OVER 45 TONS TO 100 TONS; DERRICK UNDER 100 TONS; SELF-PROPELLED BOOM-TYPE LIFTING DEVICE OVER 45 TONS TO 100 TONS; TOWER CRANE.....$ 67.04 32.53
OPERATOR: POWER EQUIPMENT, STEEL ERECTION: GROUP 2

(OILER)- CRANE OVER 45 TONS TO 100 TONS; DERRICK UNDER 100 TONS; SELF-PROPELLED BOOM-TYPE LIFTING DEVICE OVER 45 TONS TO 100 TONS; TOWER CRANE.....$ 43.45 31.15

OPERATOR: POWER EQUIPMENT, STEEL ERECTION: GROUP 2 (TRUCK CRANE OILER)- CRANE OVER 45 TONS TO 100 TONS; DERRICK UNDER 100 TONS; SELF-PROPELLED BOOM-TYPE LIFTING DEVICE OVER 45 TONS TO 100 TONS; TOWER CRANE.....$ 45.73 31.15

OPERATOR: POWER EQUIPMENT, STEEL ERECTION: GROUP 3 (CRANES)- CRANE, 45 TONS AND UNDER; SELF-PROPELLED BOOM-TYPE LIFTING DEVICE, 45 TONS AND UNDER.....$ 65.56 32.53

OPERATOR: POWER EQUIPMENT, STEEL ERECTION: GROUP 3 (HYDRAULIC)- CRANE, 45 TONS AND UNDER; SELF-PROPELLED BOOM-TYPE LIFTING DEVICE, 45 TONS AND UNDER.....$ 45.07 31.15

OPERATOR: POWER EQUIPMENT, STEEL ERECTION: GROUP 3 (OILER)- CRANE, 45 TONS AND UNDER; SELF-PROPELLED BOOM-TYPE LIFTING DEVICE, 45 TONS AND UNDER.....$ 43.23 31.15

OPERATOR: POWER EQUIPMENT, STEEL ERECTION: GROUP 3 (TRUCK CRANE OILER)- CRANE, 45 TONS AND UNDER; SELF-PROPELLED BOOM-TYPE LIFTING DEVICE, 45 TONS AND UNDER.....$ 45.46 31.15

OPERATOR: POWER EQUIPMENT, STEEL ERECTION: GROUP 4 (CRANES)- CHICAGO BOOM; FORKLIFT, 10 TONS AND OVER; HEAVY-DUTY REPAIR PERSON/WELDER.....$ 63.54 32.53

OPERATOR: POWER EQUIPMENT, STEEL ERECTION: GROUP 5 (CRANES)- BOOM CAT.....$ 62.24 32.53

OPERATOR: POWER EQUIPMENT, TUNNEL AND UNDERGROUND WORK- SHAFTS, STOPES, RAISES: AREA 1, GROUP 1- HEADING SHIELD OPERATOR; HEAVY-DUTY REPAIRPERSON; MUCKING MACHINE (RUBBER TIRED, RAIL OR TRACK TYPE); RAISED BORE OPERATOR (TUNNELS); TUNNEL MOLE BORE OPERATOR. (AREA 1: LISTED WAGE RATES. AREA 2: RECEIVES AN ADDITIONAL $2.00 PER HOUR ABOVE AREA 1 RATES.) (AREA 1: ALAMEDA, CALAVERAS (EXCEPT EASTERN PART), CONTRA COSTA, FRESNO (EXCEPT EASTERN PART), KINGS, MADERA (EXCEPT EASTERN PART), MARIPOSA (EXCEPT EASTERN PART), MERCED, MONTEREY (EXCEPT SOUTHWESTERN PART), SAN BENITO, SAN FANCISCO, SAN JOAQUIN, SAN MATEO, SANTA CLARA, SANTA CRUZ, STANISLAUS, TUOLUMNE (EXCEPT EASTERN PART) COUNTIES. AREA 2: CALAVERAS (EASTERN PART), FRESNO (EASTERN PART), MADERA (EASTERN PART), MARIPOSA (EASTERN PART), MONTEREY (SOUTHWESTERN PART), TUOLUMNE (EASTERN PART) COUNTIES).....$ 63.06 32.53

OPERATOR: POWER EQUIPMENT, TUNNEL AND UNDERGROUND WORK- SHAFTS, STOPES, RAISES: AREA 1, GROUP 1-A- TUNNEL BORE MACHINE OPERATOR 20' DIAMETER OR MORE. (AREA 1: LISTED WAGE RATES. AREA 2: RECEIVES AN ADDITIONAL $2.00 PER HOUR ABOVE AREA 1 RATES.) (AREA 1: ALAMEDA, CALAVERAS (EXCEPT EASTERN PART), CONTRA COSTA, FRESNO (EXCEPT EASTERN PART), KINGS, MADERA (EXCEPT EASTERN PART), MARIPOSA (EXCEPT EASTERN PART), MERCED, MONTEREY (EXCEPT SOUTHWESTERN PART), SAN BENITO, SAN FANCISCO, SAN JOAQUIN, SAN MATEO, SANTA CLARA, SANTA CRUZ, STANISLAUS, TUOLUMNE (EXCEPT EASTERN PART) COUNTIES. AREA 2: CALAVERAS (EASTERN PART), FRESNO (EASTERN PART), MADERA (EASTERN PART), MARIPOSA (EASTERN PART), MONTEREY (SOUTHWESTERN PART), TUOLUMNE (EASTERN PART) COUNTIES).....$ 65.53 32.53

OPERATOR: POWER EQUIPMENT, TUNNEL AND UNDERGROUND WORK- SHAFTS, STOPES, RAISES: AREA 1, GROUP 2- COMBINATION SLUSHER AND MOTOR OPERATOR; CONCRETE PUMP OR PUMPCRETE GUN; POWER JUMBO OPERATOR. (AREA

1: LISTED WAGE RATES. AREA 2: RECEIVES AN
ADDITIONAL $2.00 PER HOUR ABOVE AREA 1 RATES.)
(AREA 1: ALAMEDA, CALAVERAS (EXCEPT EASTERN PART),
CONTRA COSTA, FRESNO (EXCEPT EASTERN PART), KINGS,
MADERA (EXCEPT EASTERN PART), MARIPOSA (EXCEPT
EASTERN PART), MERCED, MONTEREY (EXCEPT
SOUTHWESTERN PART), SAN BENITO, SAN FANCISCO, SAN
JOAQUIN, SAN MATEO, SANTA CLARA, SANTA CRUZ,
STANISLAUS, TUOLUMNE (EXCEPT EASTERN PART)
COUNTIES. AREA 2: CALAVERAS (EASTERN PART), FRESNO
(EASTERN PART), MADERA (EASTERN PART), MARIPOSA
(EASTERN PART), MONTEREY (SOUTHWESTERN PART),
TUOLUMNE (EASTERN PART) COUNTIES).....$ 61.80 32.53
OPERATOR: POWER EQUIPMENT, TUNNEL AND UNDERGROUND
WORK- SHAFTS, STOPES, RAISES: AREA 1, GROUP 3-
DRILL DOCTOR; MINE OR SHAFT HOIST. (AREA 1: LISTED
WAGE RATES. AREA 2: RECEIVES AN ADDITIONAL $2.00
PER HOUR ABOVE AREA 1 RATES.) (AREA 1: ALAMEDA,
CALAVERAS (EXCEPT EASTERN PART), CONTRA COSTA,
FRESNO (EXCEPT EASTERN PART), KINGS, MADERA (EXCEPT
EASTERN PART), MARIPOSA (EXCEPT EASTERN PART),
MERCED, MONTEREY (EXCEPT SOUTHWESTERN PART), SAN
BENITO, SAN FANCISCO, SAN JOAQUIN, SAN MATEO, SANTA
CLARA, SANTA CRUZ, STANISLAUS, TUOLUMNE (EXCEPT
EASTERN PART) COUNTIES. AREA 2: CALAVERAS (EASTERN
PART), FRESNO (EASTERN PART), MADERA (EASTERN
PART), MARIPOSA (EASTERN PART), MONTEREY
(SOUTHWESTERN PART), TUOLUMNE (EASTERN PART)
COUNTIES).....$ 60.47 32.53
OPERATOR: POWER EQUIPMENT, TUNNEL AND UNDERGROUND
WORK- SHAFTS, STOPES, RAISES: AREA 1, GROUP 4-
COMBINATION SLURRY MIXER CLEANER; GROUTING MACHINE
OPERATOR; MOTORMAN. (AREA 1: LISTED WAGE RATES.
AREA 2: RECEIVES AN ADDITIONAL $2.00 PER HOUR ABOVE
AREA 1 RATES.) (AREA 1: ALAMEDA, CALAVERAS (EXCEPT
EASTERN PART), CONTRA COSTA, FRESNO (EXCEPT EASTERN
PART), KINGS, MADERA (EXCEPT EASTERN PART),
MARIPOSA (EXCEPT EASTERN PART), MERCED, MONTEREY
(EXCEPT SOUTHWESTERN PART), SAN BENITO, SAN
FANCISCO, SAN JOAQUIN, SAN MATEO, SANTA CLARA,
SANTA CRUZ, STANISLAUS, TUOLUMNE (EXCEPT EASTERN
PART) COUNTIES. AREA 2: CALAVERAS (EASTERN PART),
FRESNO (EASTERN PART), MADERA (EASTERN PART),
MARIPOSA (EASTERN PART), MONTEREY (SOUTHWESTERN
PART), TUOLUMNE (EASTERN PART) COUNTIES).....$ 59.33 32.53
OPERATOR: POWER EQUIPMENT, TUNNEL AND UNDERGROUND
WORK- SHAFTS, STOPES, RAISES: AREA 1, GROUP 5- BIT
SHARPENER; BRAKEMAN; COMBINATION MIXER AND
COMPRESSOR (GUNITE); COMPRESSOR OPERATOR; OILER;
PUMP OPERATOR; SLUSHER OPERATOR. (AREA 1: LISTED
WAGE RATES. AREA 2: RECEIVES AN ADDITIONAL $2.00
PER HOUR ABOVE AREA 1 RATES.) (AREA 1: ALAMEDA,
CALAVERAS (EXCEPT EASTERN PART), CONTRA COSTA,
FRESNO (EXCEPT EASTERN PART), KINGS, MADERA (EXCEPT
EASTERN PART), MARIPOSA (EXCEPT EASTERN PART),
MERCED, MONTEREY (EXCEPT SOUTHWESTERN PART), SAN
BENITO, SAN FANCISCO, SAN JOAQUIN, SAN MATEO, SANTA
CLARA, SANTA CRUZ, STANISLAUS, TUOLUMNE (EXCEPT
EASTERN PART) COUNTIES. AREA 2: CALAVERAS (EASTERN
PART), FRESNO (EASTERN PART), MADERA (EASTERN
PART), MARIPOSA (EASTERN PART), MONTEREY
(SOUTHWESTERN PART), TUOLUMNE (EASTERN PART)
COUNTIES).....$ 58.19 32.53
OPERATOR: POWER EQUIPMENT, TUNNEL AND UNDERGROUND
WORK- UNDERGOUND: AREA 1, GROUP 1- HEADING SHIELD

OPERATOR; HEAVY-DUTY REPAIRPERSON; MUCKING MACHINE (RUBBER TIRED, RAIL OR TRACK TYPE); RAISED BORE OPERATOR (TUNNELS); TUNNEL MOLE BORE OPERATOR. (AREA 1: LISTED WAGE RATES. AREA 2: RECEIVES AN ADDITIONAL $2.00 PER HOUR ABOVE AREA 1 RATES.) (AREA 1: ALAMEDA, CALAVERAS (EXCEPT EASTERN PART), CONTRA COSTA, FRESNO (EXCEPT EASTERN PART), KINGS, MADERA (EXCEPT EASTERN PART), MARIPOSA (EXCEPT EASTERN PART), MERCED, MONTEREY (EXCEPT SOUTHWESTERN PART), SAN BENITO, SAN FANCISCO, SAN JOAQUIN, SAN MATEO, SANTA CLARA, SANTA CRUZ, STANISLAUS, TUOLUMNE (EXCEPT EASTERN PART) COUNTIES. AREA 2: CALAVERAS (EASTERN PART), FRESNO (EASTERN PART), MADERA (EASTERN PART), MARIPOSA (EASTERN PART), MONTEREY (SOUTHWESTERN PART), TUOLUMNE (EASTERN PART) COUNTIES).....$ 62.96 32.53

OPERATOR: POWER EQUIPMENT, TUNNEL AND UNDERGROUND WORK- UNDERGOUND: AREA 1, GROUP 1-A- TUNNEL BORE MACHINE OPERATOR 20' DIAMETER OR MORE. (AREA 1: LISTED WAGE RATES. AREA 2: RECEIVES AN ADDITIONAL $2.00 PER HOUR ABOVE AREA 1 RATES.) (AREA 1: ALAMEDA, CALAVERAS (EXCEPT EASTERN PART), CONTRA COSTA, FRESNO (EXCEPT EASTERN PART), KINGS, MADERA (EXCEPT EASTERN PART), MARIPOSA (EXCEPT EASTERN PART), MERCED, MONTEREY (EXCEPT SOUTHWESTERN PART), SAN BENITO, SAN FANCISCO, SAN JOAQUIN, SAN MATEO, SANTA CLARA, SANTA CRUZ, STANISLAUS, TUOLUMNE (EXCEPT EASTERN PART) COUNTIES. AREA 2: CALAVERAS (EASTERN PART), FRESNO (EASTERN PART), MADERA (EASTERN PART), MARIPOSA (EASTERN PART), MONTEREY (SOUTHWESTERN PART), TUOLUMNE (EASTERN PART) COUNTIES).....$ 65.43 32.53

OPERATOR: POWER EQUIPMENT, TUNNEL AND UNDERGROUND WORK- UNDERGOUND: AREA 1, GROUP 2- COMBINATION SLUSHER AND MOTOR OPERATOR; CONCRETE PUMP OR PUMPCRETE GUN; POWER JUMBO OPERATOR. (AREA 1: LISTED WAGE RATES. AREA 2: RECEIVES AN ADDITIONAL $2.00 PER HOUR ABOVE AREA 1 RATES.) (AREA 1: ALAMEDA, CALAVERAS (EXCEPT EASTERN PART), CONTRA COSTA, FRESNO (EXCEPT EASTERN PART), KINGS, MADERA (EXCEPT EASTERN PART), MARIPOSA (EXCEPT EASTERN PART), MERCED, MONTEREY (EXCEPT SOUTHWESTERN PART), SAN BENITO, SAN FANCISCO, SAN JOAQUIN, SAN MATEO, SANTA CLARA, SANTA CRUZ, STANISLAUS, TUOLUMNE (EXCEPT EASTERN PART) COUNTIES. AREA 2: CALAVERAS (EASTERN PART), FRESNO (EASTERN PART), MADERA (EASTERN PART), MARIPOSA (EASTERN PART), MONTEREY (SOUTHWESTERN PART), TUOLUMNE (EASTERN PART) COUNTIES).....$ 61.70 32.53

OPERATOR: POWER EQUIPMENT, TUNNEL AND UNDERGROUND WORK- UNDERGOUND: AREA 1, GROUP 3- DRILL DOCTOR; MINE OR SHAFT HOIST. (AREA 1: LISTED WAGE RATES. AREA 2: RECEIVES AN ADDITIONAL $2.00 PER HOUR ABOVE AREA 1 RATES.) (AREA 1: ALAMEDA, CALAVERAS (EXCEPT EASTERN PART), CONTRA COSTA, FRESNO (EXCEPT EASTERN PART), KINGS, MADERA (EXCEPT EASTERN PART), MARIPOSA (EXCEPT EASTERN PART), MERCED, MONTEREY (EXCEPT SOUTHWESTERN PART), SAN BENITO, SAN FANCISCO, SAN JOAQUIN, SAN MATEO, SANTA CLARA, SANTA CRUZ, STANISLAUS, TUOLUMNE (EXCEPT EASTERN PART) COUNTIES. AREA 2: CALAVERAS (EASTERN PART), FRESNO (EASTERN PART), MADERA (EASTERN PART), MARIPOSA (EASTERN PART), MONTEREY (SOUTHWESTERN PART), TUOLUMNE (EASTERN PART) COUNTIES).....$ 60.37 32.53

OPERATOR: POWER EQUIPMENT, TUNNEL AND UNDERGROUND

WORK- UNDERGOUND: AREA 1, GROUP 4- COMBINATION SLURRY MIXER CLEANER; GROUTING MACHINE OPERATOR; MOTORMAN. (AREA 1: LISTED WAGE RATES. AREA 2: RECEIVES AN ADDITIONAL $2.00 PER HOUR ABOVE AREA 1 RATES.) (AREA 1: ALAMEDA, CALAVERAS (EXCEPT EASTERN PART), CONTRA COSTA, FRESNO (EXCEPT EASTERN PART), KINGS, MADERA (EXCEPT EASTERN PART), MARIPOSA (EXCEPT EASTERN PART), MERCED, MONTEREY (EXCEPT SOUTHWESTERN PART), SAN BENITO, SAN FANCISCO, SAN JOAQUIN, SAN MATEO, SANTA CLARA, SANTA CRUZ, STANISLAUS, TUOLUMNE (EXCEPT EASTERN PART) COUNTIES. AREA 2: CALAVERAS (EASTERN PART), FRESNO (EASTERN PART), MADERA (EASTERN PART), MARIPOSA (EASTERN PART), MONTEREY (SOUTHWESTERN PART), TUOLUMNE (EASTERN PART) COUNTIES).....$ 59.23 32.53

OPERATOR: POWER EQUIPMENT, TUNNEL AND UNDERGROUND WORK- UNDERGOUND: AREA 1, GROUP 5- BIT SHARPENER; BRAKEMAN; COMBINATION MIXER AND COMPRESSOR (GUNITE); COMPRESSOR OPERATOR; OILER; PUMP OPERATOR; SLUSHER OPERATOR. (AREA 1: LISTED WAGE RATES. AREA 2: RECEIVES AN ADDITIONAL $2.00 PER HOUR ABOVE AREA 1 RATES.) (AREA 1: ALAMEDA, CALAVERAS (EXCEPT EASTERN PART), CONTRA COSTA, FRESNO (EXCEPT EASTERN PART), KINGS, MADERA (EXCEPT EASTERN PART), MARIPOSA (EXCEPT EASTERN PART), MERCED, MONTEREY (EXCEPT SOUTHWESTERN PART), SAN BENITO, SAN FANCISCO, SAN JOAQUIN, SAN MATEO, SANTA CLARA, SANTA CRUZ, STANISLAUS, TUOLUMNE (EXCEPT EASTERN PART) COUNTIES. AREA 2: CALAVERAS (EASTERN PART), FRESNO (EASTERN PART), MADERA (EASTERN PART), MARIPOSA (EASTERN PART), MONTEREY (SOUTHWESTERN PART), TUOLUMNE (EASTERN PART) COUNTIES).....$ 58.09 32.53

OPERATOR: POWER EQUIPMENT, AREA 1: GROUP 1- OPERATOR OF HELICOPTER (WHEN USED IN ERECTION WORK); HYDRAULIC EXCAVATOR, 7 CU. YDS. AND OVER; POWER SHOVELS, OVER 7 CU. YDS. (AREA 1: LISTED WAGE RATES. AREA 2: RECEIVES AN ADDITIONAL $2.00 PER HOUR ABOVE AREA 1 RATES.) (AREA 1: ALAMEDA, CALAVERAS (EXCEPT EASTERN PART), CONTRA COSTA, FRESNO (EXCEPT EASTERN PART), KINGS, MADERA (EXCEPT EASTERN PART), MARIPOSA (EXCEPT EASTERN PART), MERCED, MONTEREY (EXCEPT SOUTHWESTERN PART), SAN BENITO, SAN FANCISCO, SAN JOAQUIN, SAN MATEO, SANTA CLARA, SANTA CRUZ, STANISLAUS, TUOLUMNE (EXCEPT EASTERN PART) COUNTIES. AREA 2: CALAVERAS (EASTERN PART), FRESNO (EASTERN PART), MADERA (EASTERN PART), MARIPOSA (EASTERN PART), MONTEREY (SOUTHWESTERN PART), TUOLUMNE (EASTERN PART) COUNTIES).....$ 66.96 32.53

ENGI0003-008 08/01/2024

	Rates	Fringes
DREDGING: CLAMSHELL & DIPPER DREDGING; HYDRAULIC SUCTION DREDGING- (1) LEVERMAN. AREA 1: ALAMEDA, CONTRA COSTA, KINGS, MERCED, SAN BENITO, SAN FRANCISCO, SAN JOAQUIN, SAN MATEO, SANTA CLARA, SANTA CRUZ, AND STANISLAUS COUNTIES. CALAVERAS COUNTY-EXCEPT EASTERN PART. FRESNO COUNTY-EXCEPT EASTERN PART. MADERA COUNTY-EXCEPT EASTERN PART. MARIPOSA COUNTY-EXCEPT EASTERN PART. MONTERREY COUNTY-EXCEPT SOUTHWESTERN PART. TUOLUMNE COUNTY-EXCEPT EASTERN PART.....	$ 60.61	39.55
DREDGING: CLAMSHELL & DIPPER DREDGING; HYDRAULIC		

SUCTION DREDGING- (1) LEVERMAN. AREA 2: CALAVERAS COUNTY-EASTERN PART; FRESNO COUNTY-EASTERN PART; MADERA COUNTY-EASTERN PART; MARIPOSA COUNTY-EASTERN PART; MONTERREY COUNTY-SOUTHWESTERN PART; TUOLUMNE COUNTY-EASTERN PART.....$ 62.61 39.55

DREDGING: CLAMSHELL & DIPPER DREDGING; HYDRAULIC SUCTION DREDGING- (2) DREDGE DOZER; HEAVY DUTY REPAIRMAN. AREA 2: CALAVERAS COUNTY-EASTERN PART; FRESNO COUNTY-EASTERN PART; MADERA COUNTY-EASTERN PART; MARIPOSA COUNTY-EASTERN PART; MONTERREY COUNTY-SOUTHWESTERN PART; TUOLUMNE COUNTY-EASTERN PART.....$ 57.65 39.55

DREDGING: CLAMSHELL & DIPPER DREDGING; HYDRAULIC SUCTION DREDGING- (2) DREDGE DOZER; HEAVY DUTY REPAIRMAN. AREA 1: ALAMEDA, CONTRA COSTA, KINGS, MERCED, SAN BENITO, SAN FRANCISCO, SAN JOAQUIN, SAN MATEO, SANTA CLARA, SANTA CRUZ, AND STANISLAUS COUNTIES. CALAVERAS COUNTY-EXCEPT EASTERN PART. FRESNO COUNTY-EXCEPT EASTERN PART. MADERA COUNTY-EXCEPT EASTERN PART. MARIPOSA COUNTY-EXCEPT EASTERN PART. MONTERREY COUNTY-EXCEPT SOUTHWESTERN PART. TUOLUMNE COUNTY-EXCEPT EASTERN PART.....$ 55.65 39.55

DREDGING: CLAMSHELL & DIPPER DREDGING; HYDRAULIC SUCTION DREDGING- (3) BOOSTER PUMP OPERATOR; DECK ENGINEER; DECK MATE; DREDGE TENDER; WINCH OPERATOR. AREA 1: ALAMEDA, CONTRA COSTA, KINGS, MERCED, SAN BENITO, SAN FRANCISCO, SAN JOAQUIN, SAN MATEO, SANTA CLARA, SANTA CRUZ, AND STANISLAUS COUNTIES. CALAVERAS COUNTY-EXCEPT EASTERN PART. FRESNO COUNTY-EXCEPT EASTERN PART. MADERA COUNTY-EXCEPT EASTERN PART. MARIPOSA COUNTY-EXCEPT EASTERN PART. MONTERREY COUNTY-EXCEPT SOUTHWESTERN PART. TUOLUMNE COUNTY-EXCEPT EASTERN PART.....$ 54.53 39.55

DREDGING: CLAMSHELL & DIPPER DREDGING; HYDRAULIC SUCTION DREDGING- (3) BOOSTER PUMP OPERATOR; DECK ENGINEER; DECK MATE; DREDGE TENDER; WINCH OPERATOR. AREA 2: CALAVERAS COUNTY-EASTERN PART; FRESNO COUNTY-EASTERN PART; MADERA COUNTY-EASTERN PART; MARIPOSA COUNTY-EASTERN PART; MONTERREY COUNTY-SOUTHWESTERN PART; TUOLUMNE COUNTY-EASTERN PART.....$ 56.53 39.55

DREDGING: CLAMSHELL & DIPPER DREDGING; HYDRAULIC SUCTION DREDGING- (4) BARGEMAN; DECKHAND; FIREMAN; LEVEEHAND; OILER. AREA 1: ALAMEDA, CONTRA COSTA, KINGS, MERCED, SAN BENITO, SAN FRANCISCO, SAN JOAQUIN, SAN MATEO, SANTA CLARA, SANTA CRUZ, AND STANISLAUS COUNTIES. CALAVERAS COUNTY-EXCEPT EASTERN PART. FRESNO COUNTY-EXCEPT EASTERN PART. MADERA COUNTY-EXCEPT EASTERN PART. MARIPOSA COUNTY-EXCEPT EASTERN PART. MONTERREY COUNTY-EXCEPT SOUTHWESTERN PART. TUOLUMNE COUNTY-EXCEPT EASTERN PART.....$ 51.23 39.55

DREDGING: CLAMSHELL & DIPPER DREDGING; HYDRAULIC SUCTION DREDGING- (4) BARGEMAN; DECKHAND; FIREMAN; LEVEEHAND; OILER. AREA 2: CALAVERAS COUNTY-EASTERN PART; FRESNO COUNTY-EASTERN PART; MADERA COUNTY-EASTERN PART; MARIPOSA COUNTY-EASTERN PART; MONTERREY COUNTY-SOUTHWESTERN PART; TUOLUMNE COUNTY-EASTERN PART.....$ 53.23 39.55

ENGI0003-019 06/30/2025

	Rates	Fringes
OPERATOR: POWER EQUIPMENT, LANDSCAPE WORK ONLY: GROUP 1- LANDSCAPE FINISH GRADE OPERATOR: ALL		

FINISH GRADE WORK REGARDLESS OF EQUIPMENT USED, AND ALL EQUIPMENT WITH A RATING MORE THAN 65 HP. (AREA 1: ALAMEDA, CONTRA COSTA, KINGS, MERCED, SAN BENITO, SAN FRANCISCO, SAN JOAQUIN, SAN MATEO, SANTA CLARA, SANTA CRUZ, AND STANISLAUS COUNTIES. CALAVARAS COUNTY-EXCEPT EASTERN PART. FRESNO COUNTY-EXCEPT EASTERN PART. MADERA COUNTY-EXCEPT EASTERN PART. MARIPOSAL-EXCEPT EASTERN PART. MONTEREY COUNTY-EXCEPT SOUTHWESTERN PART. TUOLUMNE COUNTY-EXCEPT EASTERN PART.).....$ 55.85 28.56

OPERATOR: POWER EQUIPMENT, LANDSCAPE WORK ONLY: GROUP 1- LANDSCAPE FINISH GRADE OPERATOR: ALL FINISH GRADE WORK REGARDLESS OF EQUIPMENT USED, AND ALL EQUIPMENT WITH A RATING MORE THAN 65 HP. (AREA 2: CALAVERAS COUNTY-EASTERN PART. FRESNO COUNTY-EASTERN PART. MADERA COUNTY-EASTERN PART. MARIPOSA COUNTY-EASTERN PART. MONTEREY COUNTY-SOUTHWESTERN PART. TUOLUMNE COUNTY-EASTERN PART.).....$ 57.85 28.56

OPERATOR: POWER EQUIPMENT, LANDSCAPE WORK ONLY: GROUP 2- LANDSCAPE OPERATOR UP TO 65 HP: ALL EQUIPMENT WITH A MANUFACTURER'S RATING OF 65 HP OR LESS EXCEPT EQUIPMENT COVERED BY GROUP 1 OR GROUP 3. THE FOLLOWING EQUIPMENT SHALL BE INCLUDED EXCEPT WHEN USED FOR FINISH WORK AS LONG AS MANUFACTURER'S RATING IS 65 HP OR LESS: A-FRAME AND WINCH TRUCK, BACKHOE, FORKLIFT, HYDRAGRAPHIC SEEDER MACHINE, ROLLER, RUBBER-TIRED AND TRACK EARTHMOVING EQUIPMENT, SKIPLOADER, STRAW BLOWERS, AND TRENCHER 31 HP UP TO 65 HP. (AREA 1: ALAMEDA, CONTRA COSTA, KINGS, MERCED, SAN BENITO, SAN FRANCISCO, SAN JOAQUIN, SAN MATEO, SANTA CLARA, SANTA CRUZ, AND STANISLAUS COUNTIES. CALAVARAS COUNTY-EXCEPT EASTERN PART. FRESNO COUNTY-EXCEPT EASTERN PART. MADERA COUNTY-EXCEPT EASTERN PART. MARIPOSAL-EXCEPT EASTERN PART. MONTEREY COUNTY-EXCEPT SOUTHWESTERN PART. TUOLUMNE COUNTY-EXCEPT EASTERN PART.).....$ 52.25 28.56

OPERATOR: POWER EQUIPMENT, LANDSCAPE WORK ONLY: GROUP 2- LANDSCAPE OPERATOR UP TO 65 HP: ALL EQUIPMENT WITH A MANUFACTURER'S RATING OF 65 HP OR LESS EXCEPT EQUIPMENT COVERED BY GROUP 1 OR GROUP 3. THE FOLLOWING EQUIPMENT SHALL BE INCLUDED EXCEPT WHEN USED FOR FINISH WORK AS LONG AS MANUFACTURER'S RATING IS 65 HP OR LESS: A-FRAME AND WINCH TRUCK, BACKHOE, FORKLIFT, HYDRAGRAPHIC SEEDER MACHINE, ROLLER, RUBBER-TIRED AND TRACK EARTHMOVING EQUIPMENT, SKIPLOADER, STRAW BLOWERS, AND TRENCHER 31 HP UP TO 65 HP. (AREA 2: CALAVERAS COUNTY-EASTERN PART. FRESNO COUNTY-EASTERN PART. MADERA COUNTY-EASTERN PART. MARIPOSA COUNTY-EASTERN PART. MONTEREY COUNTY-SOUTHWESTERN PART. TUOLUMNE COUNTY-EASTERN PART.).....$ 54.25 28.56

OPERATOR: POWER EQUIPMENT, LANDSCAPE WORK ONLY: GROUP 3- LANDSCAPE UTILITY OPERATOR: SMALL RUBBER-TIRED TRACTOR, TRENCHER UNDER 31 HP. (AREA 1: ALAMEDA, CONTRA COSTA, KINGS, MERCED, SAN BENITO, SAN FRANCISCO, SAN JOAQUIN, SAN MATEO, SANTA CLARA, SANTA CRUZ, AND STANISLAUS COUNTIES. CALAVARAS COUNTY-EXCEPT EASTERN PART. FRESNO COUNTY-EXCEPT EASTERN PART. MADERA COUNTY-EXCEPT EASTERN PART. MARIPOSAL-EXCEPT EASTERN PART. MONTEREY COUNTY-EXCEPT SOUTHWESTERN PART. TUOLUMNE COUNTY-EXCEPT EASTERN PART.).....$ 47.64 28.56

OPERATOR: POWER EQUIPMENT, LANDSCAPE WORK ONLY: GROUP 3- LANDSCAPE UTILITY OPERATOR: SMALL

RUBBER-TIRED TRACTOR, TRENCHER UNDER 31 HP. (AREA 2: CALAVERAS COUNTY-EASTERN PART. FRESNO COUNTY-EASTERN PART. MADERA COUNTY-EASTERN PART. MARIPOSA COUNTY-EASTERN PART. MONTEREY COUNTY-SOUTHWESTERN PART. TUOLUMNE COUNTY-EASTERN PART.).....$ 49.64 28.56

IRON0377-001 01/01/2025

	Rates	Fringes
IRONWORKERS: FENCE ERECTOR (ALAMEDA, CONTRA COSTA, SAN MATEO, SANTA CLARA COUNTIES). PREMIUM PAY: $6.00 ADDITIONAL PER HOUR AT THE FOLLOWING LOCATIONS: CHINA LAKE NAVAL TEST STATION, CHOCOLATE MOUNTAINS NAVAL RESERVE-NILAND, EDWARDS AFB, FORT IRWIN MILITARY STATION, FORT IRWIN TRAINING CENTER-GOLDSTONE, SAN CLEMENTE ISLAND, SAN NICHOLAS ISLAND, SUSANVILLE FEDERAL PRISON, 29 PALMS-MARINE CORPS, U.S. MARINE BASE-BARSTOW, U.S. NAVAL AIR FACILITY-SEALY, VENDENBERG AFB. $4.00 ADDITIONAL PER HOUR AT THE FOLLOWING LOCATIONS: ARMY DEENSE LANGUAGE INSTITUTE-MONTEREY, FALLON AIR BASE, NAVAL POST GRADUATE SCHOOL-MONTEREY, YERMO MARINE CORPS LOGISTICS CENTER. $2.00 ADDITIONAL PER HOUR AT THE FOLLOWING LOCATIONS: PORT HUENEME, PORT MUGU, U.S. COAST GUARD STATION-TWO ROCK	$ 45.78	26.51
IRONWORKERS: ORNAMENTAL, REINFORCING AND STRUCTURAL (ALAMEDA, CONTRA COSTA, SAN MATEO, SANTA CLARA COUNTIES) PREMIUM PAY: $6.00 ADDITIONAL PER HOUR AT THE FOLLOWING LOCATIONS: CHINA LAKE NAVAL TEST STATION, CHOCOLATE MOUNTAINS NAVAL RESERVE-NILAND, EDWARDS AFB, FORT IRWIN MILITARY STATION, FORT IRWIN TRAINING CENTER-GOLDSTONE, SAN CLEMENTE ISLAND, SAN NICHOLAS ISLAND, SUSANVILLE FEDERAL PRISON, 29 PALMS-MARINE CORPS, U.S. MARINE BASE-BARSTOW, U.S. NAVAL AIR FACILITY-SEALY, VENDENBERG AFB. $4.00 ADDITIONAL PER HOUR AT THE FOLLOWING LOCATIONS: ARMY DEENSE LANGUAGE INSTITUTE-MONTEREY, FALLON AIR BASE, NAVAL POST GRADUATE SCHOOL-MONTEREY, YERMO MARINE CORPS LOGISTICS CENTER. $2.00 ADDITIONAL PER HOUR AT THE FOLLOWING LOCATIONS: PORT HUENEME, PORT MUGU, U.S. COAST GUARD STATION-TWO ROCK	$ 55.33	35.15

IRON0377-003 01/01/2025

	Rates	Fringes
IRONWORKERS: FENCE ERECTOR (SAN FRANCISCO CITY AND COUNTY) PREMIUM PAY: $6.00 ADDITIONAL PER HOUR AT THE FOLLOWING LOCATIONS: CHINA LAKE NAVAL TEST STATION, CHOCOLATE MOUNTAINS NAVAL RESERVE-NILAND, EDWARDS AFB, FORT IRWIN MILITARY STATION, FORT IRWIN TRAINING CENTER-GOLDSTONE, SAN CLEMENTE ISLAND, SAN NICHOLAS ISLAND, SUSANVILLE FEDERAL PRISON, 29 PALMS-MARINE CORPS, U.S. MARINE BASE-BARSTOW, U.S. NAVAL AIR FACILITY-SEALY, VENDENBERG AFB. $4.00 ADDITIONAL PER HOUR AT THE FOLLOWING LOCATIONS: ARMY DEENSE LANGUAGE INSTITUTE-MONTEREY, FALLON AIR BASE, NAVAL POST GRADUATE SCHOOL-MONTEREY, YERMO MARINE CORPS LOGISTICS CENTER. $2.00 ADDITIONAL PER HOUR AT THE FOLLOWING LOCATIONS: PORT HUENEME, PORT MUGU, U.S. COAST GUARD STATION-TWO ROCK	$ 45.78	26.51
IRONWORKERS: ORNAMENTAL, REINFORCING AND STRUCTURAL (SAN FRANCISCO CITY AND COUNTY) PREMIUM PAY: $6.00		

ADDITIONAL PER HOUR AT THE FOLLOWING LOCATIONS:
CHINA LAKE NAVAL TEST STATION, CHOCOLATE MOUNTAINS
NAVAL RESERVE-NILAND, EDWARDS AFB, FORT IRWIN
MILITARY STATION, FORT IRWIN TRAINING
CENTER-GOLDSTONE, SAN CLEMENTE ISLAND, SAN NICHOLAS
ISLAND, SUSANVILLE FEDERAL PRISON, 29 PALMS-MARINE
CORPS, U.S. MARINE BASE-BARSTOW, U.S. NAVAL AIR
FACILITY-SEALY, VENDENBERG AFB. $4.00 ADDITIONAL
PER HOUR AT THE FOLLOWING LOCATIONS: ARMY DEENSE
LANGUAGE INSTITUTE-MONTEREY, FALLON AIR BASE, NAVAL
POST GRADUATE SCHOOL-MONTEREY, YERMO MARINE CORPS
LOGISTICS CENTER. $2.00 ADDITIONAL PER HOUR AT THE
FOLLOWING LOCATIONS: PORT HUENEME, PORT MUGU, U.S.
COAST GUARD STATION-TWO ROCK.....$ 55.83 35.15

IRON0433-005 01/01/2025

	Rates	Fringes
IRONWORKER: FENCE ERECTOR (REMAINING COUNTIES) PREMIUM PAY: $6.00 ADDITIONAL PER HOUR AT THE FOLLOWING LOCATIONS: CHINA LAKE NAVAL TEST STATION, CHOCOLATE MOUNTAINS NAVAL RESERVE-NILAND, EDWARDS AFB, FORT IRWIN MILITARY STATION, FORT IRWIN TRAINING CENTER-GOLDSTONE, SAN CLEMENTE ISLAND, SAN NICHOLAS ISLAND, SUSANVILLE FEDERAL PRISON, 29 PALMS-MARINE CORPS, U.S. MARINE BASE-BARSTOW, U.S. NAVAL AIR FACILITY-SEALY, VENDENBERG AFB. $4.00 ADDITIONAL PER HOUR AT THE FOLLOWING LOCATIONS: ARMY DEENSE LANGUAGE INSTITUTE-MONTEREY, FALLON AIR BASE, NAVAL POST GRADUATE SCHOOL-MONTEREY, YERMO MARINE CORPS LOGISTICS CENTER. $2.00 ADDITIONAL PER HOUR AT THE FOLLOWING LOCATIONS: PORT HUENEME, PORT MUGU, U.S. COAST GUARD STATION-TWO ROCK.....	$ 45.78	26.51
IRONWORKER: ORNAMENTAL, REINFORCING AND STRUCTURAL (REMAINING COUNTIES) PREMIUM PAY: $6.00 ADDITIONAL PER HOUR AT THE FOLLOWING LOCATIONS: CHINA LAKE NAVAL TEST STATION, CHOCOLATE MOUNTAINS NAVAL RESERVE-NILAND, EDWARDS AFB, FORT IRWIN MILITARY STATION, FORT IRWIN TRAINING CENTER-GOLDSTONE, SAN CLEMENTE ISLAND, SAN NICHOLAS ISLAND, SUSANVILLE FEDERAL PRISON, 29 PALMS-MARINE CORPS, U.S. MARINE BASE-BARSTOW, U.S. NAVAL AIR FACILITY-SEALY, VENDENBERG AFB. $4.00 ADDITIONAL PER HOUR AT THE FOLLOWING LOCATIONS: ARMY DEENSE LANGUAGE INSTITUTE-MONTEREY, FALLON AIR BASE, NAVAL POST GRADUATE SCHOOL-MONTEREY, YERMO MARINE CORPS LOGISTICS CENTER. $2.00 ADDITIONAL PER HOUR AT THE FOLLOWING LOCATIONS: PORT HUENEME, PORT MUGU, U.S. COAST GUARD STATION-TWO ROCK.....	$ 50.70	35.15

LABO0067-006 06/30/2025

	Rates	Fringes
LABORER: ASBESTOS/MOLD/LEAD LABORER. ASBESTOS REMOVAL-SCOPE OF WORK: SITE MOBILIZATION; INITIAL SITE CLEAN-UP; SITE PREPARATION; REMOVAL OF ASBESTOS-CONTAINING MATERIALS FROM WALLS AND CEILINGS; OR FROM PIPES, BOILERS, AND MECHANICAL SYSTEMS ONLY IF THEY ARE BEING SCRAPPED; ENCAPSULATION, ENCLOSURE AND DISPOSAL OF ASBESTOS-CONTAINING MATERIALS BY HAND OR WITH EQUIPMENT OR MACHINERY; SCAFFOLDING; FABRICATION OF TEMPORARY WOODEN BARRIERS; AND ASSEMBLY OF DECONTAMINATION STATIONS. (AREA 1: ALAMEDA, CONTRA COSTA, SAN FRANCISCO, SAN MATEO, AND SANTA CLARA		

COUNTIES).....$ 39.15 30.03
LABORER: ASBESTOS/MOLD/LEAD LABORER. ASBESTOS REMOVAL-SCOPE OF WORK: SITE MOBILIZATION; INITIAL SITE CLEAN-UP; SITE PREPARATION; REMOVAL OF ASBESTOS-CONTAINING MATERIALS FROM WALLS AND CEILINGS; OR FROM PIPES, BOILERS, AND MECHANICAL SYSTEMS ONLY IF THEY ARE BEING SCRAPPED; ENCAPSULATION, ENCLOSURE AND DISPOSAL OF ASBESTOS-CONTAINING MATERIALS BY HAND OR WITH EQUIPMENT OR MACHINERY; SCAFFOLDING; FABRICATION OF TEMPORARY WOODEN BARRIERS; AND ASSEMBLY OF DECONTAMINATION STATIONS. (AREA 2: CALAVERAS, FRESNO, KINGS, MADERA, MARIPOSA, MERCED, MONTEREY, SAN BENITO, SAN JOAQUIN, STANISLAUS, AND TUOLUMNE COUNTIES).....$ 38.15 30.03

LABO0073-002 07/01/2023

	Rates	Fringes
LABORER, TRAFFIC CONTROL/LANE CLOSURE: ESCORT DRIVER, FLAG PERSON (CALAVERAS AND SAN JOAQUIN COUNTIES)	$ 36.26	27.30
LABORER, TRAFFIC CONTROL/LANE CLOSURE: TRAFFIC CONTROL PERSON I- LAYOUT OF TRAFFIC CONTROL, CRASH CUSHIONS, CONSTRUCTION AREA AND ROADSIDE SIGNAGE. (CALAVERAS AND SAN JOAQUIN COUNTIES)	$ 36.56	27.30
LABORER, TRAFFIC CONTROL/LANE CLOSURE: TRAFFIC CONTROL PERSON II- INSTALLATION AND REMOVAL OF TEMPORARY/PERMANENT SIGNS, MARKERS, DELINEATORS AND CRASH CUSHIONS. (CALAVERAS AND SAN JOAQUIN COUNTIES)	$ 34.06	27.30

LABO0073-003 07/01/2023

	Rates	Fringes
LABORER: MASON TENDER-BRICK (SAN JOAQUIN COUNTY)	$ 36.29	25.55

LABO0073-005 06/26/2023

	Rates	Fringes
TUNNEL AND SHAFT LABORERS: GROUP 1- DIAMOND DRILLER; GROUNDMEN; GUNITE AND SHOTCRETE NOZZLEMEN	$ 45.89	27.72
TUNNEL AND SHAFT LABORERS: GROUP 2- RODMEN; SHAFT WORK & RAISE (BELOW ACTUAL OR EXCAVATED GROUND LEVEL)	$ 45.66	27.72
TUNNEL AND SHAFT LABORERS: GROUP 3- BIT GRINDER; BLASTER, DRILLER, POWDERMEN, HEADING; CHERRY PICKERMEN - WHERE CAR IS LIFTED; CONCRETE FINISHER IN TUNNEL; CONCRETE SCREEDMAN; GROUT PUMPMAN AND POTMAN; GUNITE & SHOTCRETE GUNMAN & POTMAN; HEADERMEN; HIGH PRESSURE NOZZLEMAN; MINER - TUNNEL, INCLUDING TOP AND BOTTOM MAN ON SHAFT AND RAISE WORK; NIPPER; NOZZLEMAN ON SLICK LINE; SANDBLASTER - POTMAN, ROBOTIC SHOTCRETE PLACER, SEGMENT ERECTOR, TUNNEL MUCK HAULER, STEEL FORM RAISER AND SETTER; TIMBERMAN, RETIMBERMAN (WOOD OR STEEL OR SUBSTITUTE MATERIALS THEREFORE); TUGGER (FOR TUNNEL LABORER WORK); CABLE TENDER; CHUCK TENDER; POWDERMAN - PRIMER HOUSE	$ 45.41	27.72
TUNNEL AND SHAFT LABORERS: GROUP 4- VIBRATOR OPERATOR, PAVEMENT BREAKER; BULL GANG - MUCKERS, TRACKMEN; CONCRETE CREW - INCLUDES RODDING AND SPREADING, DUMPMEN (ANY METHOD)	$ 44.96	27.72
TUNNEL AND SHAFT LABORERS: GROUP 5- GROUT CREW; REBOUNDMAN; SWAMPER/ BRAKEMAN	$ 44.42	27.72

TUNNEL AND SHAFT LABORERS: SHOTCRETE SPECIALIST.....$ 46.41 27.72

LABO0073-007 06/30/2025

	Rates	Fringes
LABORER (CONSTRUCTION CRAFT LABORERS) GROUP 1-F-WIRE WINDING MACHINE IN CONNECTION WITH GUNITING OR SHOT CRETE. FOOTNOTES: LABORERS WORKING OFF OR WITH OR FROM BOS'N CHAIRS, SWINGING SCAFFOLDS, BELTS SHALL RECEIVE $0.25 PER HOUR ABOVE THE APPLICABLE WAGE RATE. GROUP 1-B: SEWER CLEANERS SHALL RECEIVE $4.00 PER DAY ABOVE GROUP 1 WAGE RATES. ""SEWER CLEANER"" MEANS ANY WORKER WHO HANDLES OR COMES IN CONTACT WITH RAW SEWAGE IN SMALL DIAMETER SEWERS. THOSE WHO WORK INSIDE RECENTLY ACTIVE, LARGE DIAMETER SEWERS, AND ALL RECENTLY ACTIVE SEWER MANHOLES SHAL RECEIVE $5.00 PER DAY ABOVE GROUP 1 WAGE RATES. GROUP 1-D: MAINTENANCE AND REPAIR TRACK AND ROAD BEDS. ALL EMPLOYEES PERFORMING WORK COVERED HEREIN SHALL RECEIVE $0.25 PER HOUR ABOVE THEIR REGULAR RATE FOR ALL WORK PERFORMED ON UNDERGROUND STRUCTURES NOT SPECIFICALLY COVERED HEREIN. THIS PARAGRAPH SHALL NOT BE CONSTRUED TO APPLY TO WORK BELOW GROUND LEVEL IN OPEN CUT. IT SHALL APPLY TO CUT AND COVER WORK OF SUBWAY CONSTRUCTION AFTER THE TEMPORARY COVER HAS BEEN PLACED.(CALAVERAS AND SAN JOAQUIN COUNTIES).....	$ 30.37	29.89
LABORER, CONSTRUCTION CRAFT LABORERS: CONSTRUCTION SPECIALIST GROUP- ASPHALT IRONER AND RAKER; CHAINSAW; LASER BEAM IN CONNECTION WITH LABORERS' WORK; CAST-IN- PLACE MANHOLE FORM SETTER; PRESSURE PIPELAYER; DAVIS TRENCHER - 300 OR SIMILAR TYPE (AND ALL SMALL TRENCHERS); BLASTER; DIAMOND DRILLER; MULTIPLE UNIT DRILL; HYDRAULIC DRILL. FOOTNOTES: LABORERS WORKING OFF OR WITH OR FROM BOS'N CHAIRS, SWINGING SCAFFOLDS, BELTS SHALL RECEIVE $0.25 PER HOUR ABOVE THE APPLICABLE WAGE RATE. GROUP 1-B: SEWER CLEANERS SHALL RECEIVE $4.00 PER DAY ABOVE GROUP 1 WAGE RATES. ""SEWER CLEANER"" MEANS ANY WORKER WHO HANDLES OR COMES IN CONTACT WITH RAW SEWAGE IN SMALL DIAMETER SEWERS. THOSE WHO WORK INSIDE RECENTLY ACTIVE, LARGE DIAMETER SEWERS, AND ALL RECENTLY ACTIVE SEWER MANHOLES SHAL RECEIVE $5.00 PER DAY ABOVE GROUP 1 WAGE RATES. GROUP 1-D: MAINTENANCE AND REPAIR TRACK AND ROAD BEDS. ALL EMPLOYEES PERFORMING WORK COVERED HEREIN SHALL RECEIVE $0.25 PER HOUR ABOVE THEIR REGULAR RATE FOR ALL WORK PERFORMED ON UNDERGROUND STRUCTURES NOT SPECIFICALLY COVERED HEREIN. THIS PARAGRAPH SHALL NOT BE CONSTRUED TO APPLY TO WORK BELOW GROUND LEVEL IN OPEN CUT. IT SHALL APPLY TO CUT AND COVER WORK OF SUBWAY CONSTRUCTION AFTER THE TEMPORARY COVER HAS BEEN PLACED. (CALAVERAS AND SAN JOAQUIN COUNTIES).....	$ 38.85	29.89
LABORER, CONSTRUCTION CRAFT LABORERS: GROUP 1-ASPHALT SPREADER BOXES (ALL TYPES); BARKO, WACKER AND SIMILAR TYPE TAMPERS; BUGGYMOBILE; CAULKER, BANDER, PIPEWRAPPER, CONDUIT LAYER, PLASTIC PIPELAYER; CERTIFIED HAZARDOUS WASTE WORKER INCLUDING LEADE ABATEMENT; COMPACTORS OF ALL TYPES; CONCRETE AND MAGNESITE MIXER, 1/2 YD. AND UNDER; CONCRETE PAN WORK; CONCRETE SANDER; CONCRETE SAW; CRIBBER AND/OR SHORING; CUT GRANITE CURB SETTER; DRI-PAK-IT MACHINE; FALLER, LOGLOADER AND BUCKER; FORM RAISER, SLIP FORMS; GREEN CUTTER; HEADERBOARD,		

HUBSETTER, ALIGNER, BY ANY METHOD; HIGH PRESSURE BLOW PIPE (1-1/2"" OR OVER, 100 LBS. PRESSURE/OVER); HYDRO SEEDER AND SIMILAR TYPE; JACKHAMMER OPERATOR; JACKING OF PIPE OVER 12 INCHES; JACKSON AND SIMILAR TYPE COMPACTOR; KETTLE TENDER, POT AND WORKER APPLYING ASPHALT, LAY-KOLD, CREOSOTE, LIME, CAUSTIC AND SIMILAR TYPE MATERIALS (APPLYING MEANS APPLYING, DIPPING OR HANDLING OF SUCH MATERIALS); LAGGING, SHEETING, WHALING, BRACING, TRENCHJACKING, LAGGING HAMMER; MAGNESITE, EPOXYRESIN, FIBERGLASS, MASTIC WORKER (WET OR DRY); NO JOINT PIPE AND STRIPPING OF SAME, INCLUDING REPAIR OF VOIDS; PAVEMENT BREAKER AND SPADER, INCLUDING TOOL GRINDER; PERMA CURB; PIPELAYER (INCLUDING GRADE CHECKING IN CONNECTION WITH PIPELAYING); PRECAST-MANHOLE SETTER; PRESSURE PIPE TESTER; POST HOLE DIGGER, AIR, GAS AND ELECTRIC; POWER BROOM SWEEPER; POWER TAMPERS OF ALL TYPES (EXCEPT AS SHOWN IN GROUP 2); RAM SET GUN AND STUD GUN; RIPRAP STONEPAVER AND ROCK-SLINGER, INCLUDING PLACING OF SACKED CONCRETE AND/OR SAND (WET OR DRY) AND GABIONS AND SIMILAR TYPE; ROTARY SCARIFIER OR MULTIPLE HEAD CONCRETE CHIPPING SCARIFIER; ROTO AND DITCH WITCH; ROTOTILLER; SANDBLASTER, POT, GUN, NOZZLE OPERATORS; SIGNALLING AND RIGGING; TANK CLEANER; TREE CLIMBER; TURBO BLASTER; VIBRASCREED, BULL FLOAT IN CONNECTION WITH LABORERS' WORK; VIBRATOR; HAZARDOUS WASTE WORKER (LEAD REMOVAL); ASBESTOS AND MOLD REMOVAL WORKER. FOOTNOTES: LABORERS WORKING OFF OR WITH OR FROM BOS'N CHAIRS, SWINGING SCAFFOLDS, BELTS SHALL RECEIVE $0.25 PER HOUR ABOVE THE APPLICABLE WAGE RATE. GROUP 1-B: SEWER CLEANERS SHALL RECEIVE $4.00 PER DAY ABOVE GROUP 1 WAGE RATES. ""SEWER CLEANER"" MEANS ANY WORKER WHO HANDLES OR COMES IN CONTACT WITH RAW SEWAGE IN SMALL DIAMETER SEWERS. THOSE WHO WORK INSIDE RECENTLY ACTIVE, LARGE DIAMETER SEWERS, AND ALL RECENTLY ACTIVE SEWER MANHOLES SHAL RECEIVE $5.00 PER DAY ABOVE GROUP 1 WAGE RATES. GROUP 1-D: MAINTENANCE AND REPAIR TRACK AND ROAD BEDS. ALL EMPLOYEES PERFORMING WORK COVERED HEREIN SHALL RECEIVE $0.25 PER HOUR ABOVE THEIR REGULAR RATE FOR ALL WORK PERFORMED ON UNDERGROUND STRUCTURES NOT SPECIFICALLY COVERED HEREIN. THIS PARAGRAPH SHALL NOT BE CONSTRUED TO APPLY TO WORK BELOW GROUND LEVEL IN OPEN CUT. IT SHALL APPLY TO CUT AND COVER WORK OF SUBWAY CONSTRUCTION AFTER THE TEMPORARY COVER HAS BEEN PLACED. (CALAVERAS AND SAN JOAQUIN COUNTIES) .....$ 38.15 29.89

LABORER, CONSTRUCTION CRAFT LABORERS: GROUP 1-A- JOY DRILL MODEL TWM-2A; GARDNER-DENVER MODEL DH143 AND SIMILAR TYPE DRILLS; TRACK DRILLER; JACK LEG DRILLER; WAGON DRILLER; MECHANICAL DRILLERS, ALL TYPES REGARDLESS OF TYPE OR METHOD OF POWER; MECHANICAL PIPE LAYERS, ALL TYPES REGARDLESS OF TYPE OR METHOD OF POWER; BLASTER AND POWDER; ALL WORK OF LOADING, PLACING AND BLASTING OF ALL POWDER AND EXPLOSIVES OF WHATEVER TYPE REGARDLESS OF METHOD USED FOR SUCH LOADING AND PLACING; HIGH SCALERS (INCLUDING DRILLING OF SAME); TREE TOPPER; BIT GRINDER. GROUP 1-B: SEWER CLEANERS SHALL RECEIVE $4.00 PER DAY ABOVE GROUP 1 WAGE RATES. ""SEWER CLEANER"" MEANS ANY WORKER WHO HANDLES OR COMES IN CONTACT WITH RAW SEWAGE IN SMALL DIAMETER SEWERS. THOSE WHO WORK INSIDE RECENTLY ACTIVE,

LARGE DIAMETER SEWERS, AND ALL RECENTLY ACTIVE SEWER MANHOLES SHAL RECEIVE $5.00 PER DAY ABOVE GROUP 1 WAGE RATES. GROUP 1-D: MAINTENANCE AND REPAIR TRACK AND ROAD BEDS. ALL EMPLOYEES PERFORMING WORK COVERED HEREIN SHALL RECEIVE $0.25 PER HOUR ABOVE THEIR REGULAR RATE FOR ALL WORK PERFORMED ON UNDERGROUND STRUCTURES NOT SPECIFICALLY COVERED HEREIN. THIS PARAGRAPH SHALL NOT BE CONSTRUED TO APPLY TO WORK BELOW GROUND LEVEL IN OPEN CUT. IT SHALL APPLY TO CUT AND COVER WORK OF SUBWAY CONSTRUCTION AFTER THE TEMPORARY COVER HAS BEEN PLACED. (CALAVERAS AND SAN JOAQUIN COUNTIES) .....$ 38.37 29.89

LABORER, CONSTRUCTION CRAFT LABORERS: GROUP 1-C- BURNING AND WELDING IN CONNECTION WITH LABORERS' WORK; SYNTHETIC THERMOPLASTICS AND SIMILAR TYPE WELDING. FOOTNOTES: LABORERS WORKING OFF OR WITH OR FROM BOS'N CHAIRS, SWINGING SCAFFOLDS, BELTS SHALL RECEIVE $0.25 PER HOUR ABOVE THE APPLICABLE WAGE RATE. GROUP 1-B: SEWER CLEANERS SHALL RECEIVE $4.00 PER DAY ABOVE GROUP 1 WAGE RATES. ""SEWER CLEANER"" MEANS ANY WORKER WHO HANDLES OR COMES IN CONTACT WITH RAW SEWAGE IN SMALL DIAMETER SEWERS. THOSE WHO WORK INSIDE RECENTLY ACTIVE, LARGE DIAMETER SEWERS, AND ALL RECENTLY ACTIVE SEWER MANHOLES SHAL RECEIVE $5.00 PER DAY ABOVE GROUP 1 WAGE RATES. GROUP 1-D: MAINTENANCE AND REPAIR TRACK AND ROAD BEDS. ALL EMPLOYEES PERFORMING WORK COVERED HEREIN SHALL RECEIVE $0.25 PER HOUR ABOVE THEIR REGULAR RATE FOR ALL WORK PERFORMED ON UNDERGROUND STRUCTURES NOT SPECIFICALLY COVERED HEREIN. THIS PARAGRAPH SHALL NOT BE CONSTRUED TO APPLY TO WORK BELOW GROUND LEVEL IN OPEN CUT. IT SHALL APPLY TO CUT AND COVER WORK OF SUBWAY CONSTRUCTION AFTER THE TEMPORARY COVER HAS BEEN PLACED. (CALAVERAS AND SAN JOAQUIN COUNTIES).....$ 38.20 29.89

LABORER, CONSTRUCTION CRAFT LABORERS: GROUP 1-E- WORK ON AND/OR IN BELL HOLE FOOTINGS AND SHAFTS THEREOF, AND WORK ON AND IN DEEP FOOTINGS. (A DEEP FOOTING IS A HOLE 15 FEET OR MORE IN DEPTH.) IN THE EVENT THE DEPTH OF THE FOOTING IS UNKNOWN AT THE COMMENCEMENT OF EXCAVATION, AND THE FINAL DEPTH EXCEEDS 15 FEET, THE DEEP FOOTING WAGE RATE WOULD APPLY TO ALL EMPLOYEES FOR EACH AND EVERY DAY WORKED ON OR IN THE EXCAVATION OF THE FOOTING FROM THE DATE OF INCEPTION. FOOTNOTES: LABORERS WORKING OFF OR WITH OR FROM BOS'N CHAIRS, SWINGING SCAFFOLDS, BELTS SHALL RECEIVE $0.25 PER HOUR ABOVE THE APPLICABLE WAGE RATE. GROUP 1-B: SEWER CLEANERS SHALL RECEIVE $4.00 PER DAY ABOVE GROUP 1 WAGE RATES. ""SEWER CLEANER"" MEANS ANY WORKER WHO HANDLES OR COMES IN CONTACT WITH RAW SEWAGE IN SMALL DIAMETER SEWERS. THOSE WHO WORK INSIDE RECENTLY ACTIVE, LARGE DIAMETER SEWERS, AND ALL RECENTLY ACTIVE SEWER MANHOLES SHAL RECEIVE $5.00 PER DAY ABOVE GROUP 1 WAGE RATES. GROUP 1-D: MAINTENANCE AND REPAIR TRACK AND ROAD BEDS. ALL EMPLOYEES PERFORMING WORK COVERED HEREIN SHALL RECEIVE $0.25 PER HOUR ABOVE THEIR REGULAR RATE FOR ALL WORK PERFORMED ON UNDERGROUND STRUCTURES NOT SPECIFICALLY COVERED HEREIN. THIS PARAGRAPH SHALL NOT BE CONSTRUED TO APPLY TO WORK BELOW GROUND LEVEL IN OPEN CUT. IT SHALL APPLY TO CUT AND COVER WORK OF SUBWAY CONSTRUCTION AFTER THE TEMPORARY COVER HAS BEEN PLACED. (CALAVERAS AND SAN JOAQUIN

COUNTIES).....$ 38.70 29.89
LABORER, CONSTRUCTION CRAFT LABORERS: GROUP 2-
ASPHALT SHOVELER; CEMENT DUMPER AND HANDLING DRY
CEMENT OR GYPSUM; CHOKE-SETTER AND RIGGER (CLEARING
WORK); CONCRETE BUCKET DUMPER AND CHUTE; CONCRETE
CHIPPING AND GRINDING; CONCRETE LABORER (WET OR
DRY); DRILLER TENDER, CHUCK TENDER, NIPPER; GUINEA
CHASER (STAKE), GROUT CREW; HIGH PRESSURE NOZZLE,
ADDUCTOR; HYDRAULIC MONITOR (OVER 100 LBS.
PRESSURE); LOADING AND UNLOADING, CARRYING AND
HAULING OF ALL RODS AND MATERIALS FOR USE IN
REINFORCING CONCRETE CONSTRUCTION; PITTSBURGH
CHIPPER AND SIMILAR TYPE BRUSH SHREDDERS; SLOPER;
SINGLE FOOT, HAND-HELD, PNEUMATIC TAMPER; ALL
PNEUMATIC, AIR, GAS AND ELECTRIC TOOLS NOT LISTED
IN GROUPS 1 THROUGH 1-F; JACKING OF PIPE - UNDER 12
INCHES. FOOTNOTES: LABORERS WORKING OFF OR WITH
OR FROM BOS'N CHAIRS, SWINGING SCAFFOLDS, BELTS
SHALL RECEIVE $0.25 PER HOUR ABOVE THE APPLICABLE
WAGE RATE. GROUP 1-B: SEWER CLEANERS SHALL RECEIVE
$4.00 PER DAY ABOVE GROUP 1 WAGE RATES. ""SEWER
CLEANER"" MEANS ANY WORKER WHO HANDLES OR COMES IN
CONTACT WITH RAW SEWAGE IN SMALL DIAMETER SEWERS.
THOSE WHO WORK INSIDE RECENTLY ACTIVE, LARGE
DIAMETER SEWERS, AND ALL RECENTLY ACTIVE SEWER
MANHOLES SHAL RECEIVE $5.00 PER DAY ABOVE GROUP 1
WAGE RATES. GROUP 1-D: MAINTENANCE AND REPAIR
TRACK AND ROAD BEDS. ALL EMPLOYEES PERFORMING WORK
COVERED HEREIN SHALL RECEIVE $0.25 PER HOUR ABOVE
THEIR REGULAR RATE FOR ALL WORK PERFORMED ON
UNDERGROUND STRUCTURES NOT SPECIFICALLY COVERED
HEREIN. THIS PARAGRAPH SHALL NOT BE CONSTRUED TO
APPLY TO WORK BELOW GROUND LEVEL IN OPEN CUT. IT
SHALL APPLY TO CUT AND COVER WORK OF SUBWAY
CONSTRUCTION AFTER THE TEMPORARY COVER HAS BEEN
PLACED. (CALAVERAS AND SAN JOAQUIN COUNTIES).....$ 38.00 29.89
LABORER, CONSTRUCTION CRAFT LABORERS: GROUP 3-
CONSTRUCTION LABORERS, INCLUDING BRIDGE AND GENERAL
LABORER; DUMP, LOAD SPOTTER; FLAG PERSON; FIRE
WATCHER; FENCE ERECTOR; GUARDRAIL ERECTOR;
GARDENER, HORTICULTURAL AND LANDSCAPE LABORER;
JETTING; LIMBER, BRUSH LOADER AND PILER; PAVEMENT
MARKER (BUTTON SETTER); MAINTENANCE, REPAIR TRACK
AND ROAD BEDS; STREETCAR AND RAILROAD CONSTRUCTION
TRACK LABORER; TEMPORARY AIR AND WATER LINES,
VICTAULIC OR SIMILAR; TOOL ROOM ATTENDANT (JOBSITE
ONLY). FOOTNOTES: LABORERS WORKING OFF OR WITH OR
FROM BOS'N CHAIRS, SWINGING SCAFFOLDS, BELTS SHALL
RECEIVE $0.25 PER HOUR ABOVE THE APPLICABLE WAGE
RATE. GROUP 1-B: SEWER CLEANERS SHALL RECEIVE
$4.00 PER DAY ABOVE GROUP 1 WAGE RATES. ""SEWER
CLEANER"" MEANS ANY WORKER WHO HANDLES OR COMES IN
CONTACT WITH RAW SEWAGE IN SMALL DIAMETER SEWERS.
THOSE WHO WORK INSIDE RECENTLY ACTIVE, LARGE
DIAMETER SEWERS, AND ALL RECENTLY ACTIVE SEWER
MANHOLES SHAL RECEIVE $5.00 PER DAY ABOVE GROUP 1
WAGE RATES. GROUP 1-D: MAINTENANCE AND REPAIR
TRACK AND ROAD BEDS. ALL EMPLOYEES PERFORMING WORK
COVERED HEREIN SHALL RECEIVE $0.25 PER HOUR ABOVE
THEIR REGULAR RATE FOR ALL WORK PERFORMED ON
UNDERGROUND STRUCTURES NOT SPECIFICALLY COVERED
HEREIN. THIS PARAGRAPH SHALL NOT BE CONSTRUED TO
APPLY TO WORK BELOW GROUND LEVEL IN OPEN CUT. IT
SHALL APPLY TO CUT AND COVER WORK OF SUBWAY
CONSTRUCTION AFTER THE TEMPORARY COVER HAS BEEN

PLACED. (CALAVERAS AND SAN JOAQUIN COUNTIES).....$ 37.90 29.89
LABORER, CONSTRUCTION CRAFT LABORERS: GROUP 4-
FINAL CLEAN-UP WORK OF DEBRIS, GROUNDS AND BUILDING
INCLUDING BUT NOT LIMITED TO: STREET CLEANER;
CLEANING AND WASHING WINDOWS; BRICK CLEANER
(JOBSITE ONLY); MATERIAL CLEANER (JOBSITE ONLY).
THE CLASSIFICATION ""MATERIAL CLEANER"" IS TO BE
UTILIZED UNDER THE FOLLOWING CONDITIONS: A: AT
DEMOLITION SITE FOR THE SALVAGE OF THE MATERIAL.
B: AT THE CONCLUSION OF A JOB WHERE THE MATERIAL IS
TO BE SALVAGED AND STOCKED TO BE REUSED ON ANOTHER
JOB. C: FOR THE CLEANING OF SALVAGE MATERIAL AT
THE JOBSITE OR TEMPORARY JOBSITE YARD. THE
MATERIAL CLEANER CLASSIFICATION SHOULD NOT BE USED
IN THE PERFORMANCE OF ""FORM STRIPPING, CLEANING
AND OILING AND MOVING TO THE NEXT POINT OF
ERECTION"". FOOTNOTES: LABORERS WORKING OFF OR
WITH OR FROM BOS'N CHAIRS, SWINGING SCAFFOLDS,
BELTS SHALL RECEIVE $0.25 PER HOUR ABOVE THE
APPLICABLE WAGE RATE. GROUP 1-B: SEWER CLEANERS
SHALL RECEIVE $4.00 PER DAY ABOVE GROUP 1 WAGE
RATES. ""SEWER CLEANER"" MEANS ANY WORKER WHO
HANDLES OR COMES IN CONTACT WITH RAW SEWAGE IN
SMALL DIAMETER SEWERS. THOSE WHO WORK INSIDE
RECENTLY ACTIVE, LARGE DIAMETER SEWERS, AND ALL
RECENTLY ACTIVE SEWER MANHOLES SHAL RECEIVE $5.00
PER DAY ABOVE GROUP 1 WAGE RATES. GROUP 1-D:
MAINTENANCE AND REPAIR TRACK AND ROAD BEDS. ALL
EMPLOYEES PERFORMING WORK COVERED HEREIN SHALL
RECEIVE $0.25 PER HOUR ABOVE THEIR REGULAR RATE FOR
ALL WORK PERFORMED ON UNDERGROUND STRUCTURES NOT
SPECIFICALLY COVERED HEREIN. THIS PARAGRAPH SHALL
NOT BE CONSTRUED TO APPLY TO WORK BELOW GROUND
LEVEL IN OPEN CUT. IT SHALL APPLY TO CUT AND COVER
WORK OF SUBWAY CONSTRUCTION AFTER THE TEMPORARY
COVER HAS BEEN PLACED. (CALAVERAS AND SAN JOAQUIN
COUNTIES).....$ 31.59 29.89
LABORER, GUNITE: GROUP 1- STRUCTURAL NOZZLEMAN.
FOOTNOTES: LABORERS WORKING OFF OR WITH OR FROM
BOS'N CHAIRS, SWINGING SCAFFOLDS, BELTS SHALL
RECEIVE $0.25 PER HOUR ABOVE THE APPLICABLE WAGE
RATE. (CALAVERAS AND SAN JOAQUIN COUNTIES).....$ 39.11 29.89
LABORER, GUNITE: GROUP 2- NOZZLEMAN, GUNMAN,
POTMAN, GROUNDMAN. FOOTNOTES: LABORERS WORKING
OFF OR WITH OR FROM BOS'N CHAIRS, SWINGING
SCAFFOLDS, BELTS SHALL RECEIVE $0.25 PER HOUR ABOVE
THE APPLICABLE WAGE RATE. (CALAVERAS AND SAN
JOAQUIN COUNTIES).....$ 38.61 29.89
LABORER, GUNITE: GROUP 3- REBOUNDMAN. FOOTNOTES:
LABORERS WORKING OFF OR WITH OR FROM BOS'N CHAIRS,
SWINGING SCAFFOLDS, BELTS SHALL RECEIVE $0.25 PER
HOUR ABOVE THE APPLICABLE WAGE RATE. (CALAVERAS
AND SAN JOAQUIN COUNTIES).....$ 38.02 29.89
LABORER, GUNITE: GROUP 4- GUINTE LABORER.
FOOTNOTES: LABORERS WORKING OFF OR WITH OR FROM
BOS'N CHAIRS, SWINGING SCAFFOLDS, BELTS SHALL
RECEIVE $0.25 PER HOUR ABOVE THE APPLICABLE WAGE
RATE. (CALAVERAS AND SAN JOAQUIN COUNTIES).....$ 37.90 29.89
LABORER, WRECKING: GROUP 1- SKILLED WRECKER
(REMOVING AND SALVAGING OF SASH, WINDOWS, AND
MATERIALS). FOOTNOTES: LABORERS WORKING OFF OR
WITH OR FROM BOS'N CHAIRS, SWINGING SCAFFOLDS,
BELTS SHALL RECEIVE $0.25 PER HOUR ABOVE THE
APPLICABLE WAGE RATE. (CALAVERAS AND SAN JOAQUIN
COUNTIES).....$ 38.15 29.89

LABORER, WRECKING: GROUP 2- SEMI-SKILLED WRECKER (SALVAGING OF OTHER BUILDING MATERIALS). FOOTNOTES: LABORERS WORKING OFF OR WITH OR FROM BOS'N CHAIRS, SWINGING SCAFFOLDS, BELTS SHALL RECEIVE $0.25 PER HOUR ABOVE THE APPLICABLE WAGE RATE. (CALAVERAS AND SAN JOAQUIN COUNTIES).....$ 38.00 29.89

LABORER: GARDENERS, HORTICULTURAL & LANDSCAPE LABORERS - (1) New Construction. FOOTNOTES: LABORERS WORKING OFF OR WITH OR FROM BOS'N CHAIRS, SWINGING SCAFFOLDS, BELTS SHALL RECEIVE $0.25 PER HOUR ABOVE THE APPLICABLE WAGE RATE. (CALAVERAS AND SAN JOAQUIN COUNTIES).....$ 37.90 29.89

LABORER: GARDENERS, HORTICULTURAL & LANDSCAPE LABORERS - (2) Establishment Warranty Period. FOOTNOTES: LABORERS WORKING OFF OR WITH OR FROM BOS'N CHAIRS, SWINGING SCAFFOLDS, BELTS SHALL RECEIVE $0.25 PER HOUR ABOVE THE APPLICABLE WAGE RATE. (CALAVERAS AND SAN JOAQUIN COUNTIES).....$ 31.59 29.89

LABO0073-009 07/01/2023

	Rates	Fringes
LABORER, PLASTER TENDER. WORK ON A SWING STAGE SCAFFOLD: $1.00 PER HOUR ADDITIONAL. (CALAVERAS AND SAN JOAQUIN COUNTIES).....	$ 39.77	28.54

LABO0261-003 07/01/2023

	Rates	Fringes
LABORER, TRAFFIC CONTROL/LANE CLOSURE: ESCORT DRIVER, FLAG PERSON (SAN FRANCISCO AND SAN MATEO COUNTIES).....	$ 37.26	27.30
LABORER, TRAFFIC CONTROL/LANE CLOSURE: TRAFFIC CONTROL PERSON I- LAYOUT OF TRAFFIC CONTROL, CRASH CUSHIONS, CONSTRUCTION AREA AND ROADSIDE SIGNAGE. (SAN FRANCISCO AND SAN MATEO COUNTIES).....	$ 37.56	27.30
LABORER, TRAFFIC CONTROL/LANE CLOSURE: TRAFFIC CONTROL PERSON II- INSTALLATION AND REMOVAL OF TEMPORARY/PERMANENT SIGNS, MARKERS, DELINEATORS AND CRASH CUSHIONS. (SAN FRANCISCO AND SAN MATEO COUNTIES).....	$ 35.06	27.30

LABO0261-005 06/26/2023

	Rates	Fringes
TUNNEL AND SHAFT LABORERS: GROUP 1- DIAMOND DRILLER; GROUNDMEN; GUNITE AND SHOTCRETE NOZZLEMEN (SAN FRANCISCO AND SAN MATEO COUNTIES).....	$ 45.89	27.72
TUNNEL AND SHAFT LABORERS: GROUP 2- RODMEN; SHAFT WORK & RAISE (BELOW ACTUAL OR EXCAVATED GROUND LEVEL) (SAN FRANCISCO AND SAN MATEO COUNTIES).....	$ 45.66	27.72
TUNNEL AND SHAFT LABORERS: GROUP 3- BIT GRINDER; BLASTER, DRILLER, POWDERMEN, HEADING; CHERRY PICKERMEN - WHERE CAR IS LIFTED; CONCRETE FINISHER IN TUNNEL; CONCRETE SCREEDMAN; GROUT PUMPMAN AND POTMAN; GUNITE & SHOTCRETE GUNMAN & POTMAN; HEADERMEN; HIGH PRESSURE NOZZLEMAN; MINER - TUNNEL, INCLUDING TOP AND BOTTOM MAN ON SHAFT AND RAISE WORK; NIPPER; NOZZLEMAN ON SLICK LINE; SANDBLASTER - POTMAN, ROBOTIC SHOTCRETE PLACER, SEGMENT ERECTOR, TUNNEL MUCK HAULER, STEEL FORM RAISER AND SETTER; TIMBERMAN, RETIMBERMAN (WOOD OR STEEL OR SUBSTITUTE MATERIALS THEREFORE); TUGGER (FOR TUNNEL LABORER WORK); CABLE TENDER; CHUCK TENDER; POWDERMAN - PRIMER HOUSE (SAN FRANCISCO AND SAN		

MATEO COUNTIES).....$ 45.41 27.72
TUNNEL AND SHAFT LABORERS: GROUP 4- VIBRATOR OPERATOR, PAVEMENT BREAKER; BULL GANG - MUCKERS, TRACKMEN; CONCRETE CREW - INCLUDES RODDING AND SPREADING, DUMPMEN (ANY METHOD) (SAN FRANCISCO AND SAN MATEO COUNTIES).....$ 44.96 27.72
TUNNEL AND SHAFT LABORERS: GROUP 5- GROUT CREW; REBOUNDMAN; SWAMPER/ BRAKEMAN (SAN FRANCISCO AND SAN MATEO COUNTIES).....$ 44.42 27.72
TUNNEL AND SHAFT LABORERS: SHOTCRETE SPECIALIST (SAN FRANCISCO AND SAN MATEO COUNTIES).....$ 46.41 27.72

LABO0261-009 06/26/2023

	Rates	Fringes
LABORER (CONSTRUCTION CRAFT LABORERS) GROUP 1-F- WIRE WINDING MACHINE IN CONNECTION WITH GUNITING OR SHOT CRETE. FOOTNOTES: LABORERS WORKING OFF OR WITH OR FROM BOS'N CHAIRS, SWINGING SCAFFOLDS, BELTS SHALL RECEIVE $0.25 PER HOUR ABOVE THE APPLICABLE WAGE RATE. GROUP 1-B: SEWER CLEANERS SHALL RECEIVE $4.00 PER DAY ABOVE GROUP 1 WAGE RATES. ""SEWER CLEANER"" MEANS ANY WORKER WHO HANDLES OR COMES IN CONTACT WITH RAW SEWAGE IN SMALL DIAMETER SEWERS. THOSE WHO WORK INSIDE RECENTLY ACTIVE, LARGE DIAMETER SEWERS, AND ALL RECENTLY ACTIVE SEWER MANHOLES SHAL RECEIVE $5.00 PER DAY ABOVE GROUP 1 WAGE RATES. GROUP 1-D: MAINTENANCE AND REPAIR TRACK AND ROAD BEDS. ALL EMPLOYEES PERFORMING WORK COVERED HEREIN SHALL RECEIVE $0.25 PER HOUR ABOVE THEIR REGULAR RATE FOR ALL WORK PERFORMED ON UNDERGROUND STRUCTURES NOT SPECIFICALLY COVERED HEREIN. THIS PARAGRAPH SHALL NOT BE CONSTRUED TO APPLY TO WORK BELOW GROUND LEVEL IN OPEN CUT. IT SHALL APPLY TO CUT AND COVER WORK OF SUBWAY CONSTRUCTION AFTER THE TEMPORARY COVER HAS BEEN PLACED. (SAN FRANCISCO AND SAN MATEO COUNTIES).....$	31.37	23.20
LABORER, CONSTRUCTION CRAFT LABORERS: CONSTRUCTION SPECIALIST GROUP- ASPHALT IRONER AND RAKER; CHAINSAW; LASER BEAM IN CONNECTION WITH LABORERS' WORK; CAST-IN- PLACE MANHOLE FORM SETTER; PRESSURE PIPELAYER; DAVIS TRENCHER - 300 OR SIMILAR TYPE (AND ALL SMALL TRENCHERS); BLASTER; DIAMOND DRILLER; MULTIPLE UNIT DRILL; HYDRAULIC DRILL. FOOTNOTES: LABORERS WORKING OFF OR WITH OR FROM BOS'N CHAIRS, SWINGING SCAFFOLDS, BELTS SHALL RECEIVE $0.25 PER HOUR ABOVE THE APPLICABLE WAGE RATE. GROUP 1-B: SEWER CLEANERS SHALL RECEIVE $4.00 PER DAY ABOVE GROUP 1 WAGE RATES. ""SEWER CLEANER"" MEANS ANY WORKER WHO HANDLES OR COMES IN CONTACT WITH RAW SEWAGE IN SMALL DIAMETER SEWERS. THOSE WHO WORK INSIDE RECENTLY ACTIVE, LARGE DIAMETER SEWERS, AND ALL RECENTLY ACTIVE SEWER MANHOLES SHAL RECEIVE $5.00 PER DAY ABOVE GROUP 1 WAGE RATES. GROUP 1-D: MAINTENANCE AND REPAIR TRACK AND ROAD BEDS. ALL EMPLOYEES PERFORMING WORK COVERED HEREIN SHALL RECEIVE $0.25 PER HOUR ABOVE THEIR REGULAR RATE FOR ALL WORK PERFORMED ON UNDERGROUND STRUCTURES NOT SPECIFICALLY COVERED HEREIN. THIS PARAGRAPH SHALL NOT BE CONSTRUED TO APPLY TO WORK BELOW GROUND LEVEL IN OPEN CUT. IT SHALL APPLY TO CUT AND COVER WORK OF SUBWAY CONSTRUCTION AFTER THE TEMPORARY COVER HAS BEEN PLACED. (SAN FRANCISCO AND SAN MATEO COUNTIES)....$	37.20	27.30
LABORER, CONSTRUCTION CRAFT LABORERS: GROUP 1-		

ASPHALT SPREADER BOXES (ALL TYPES); BARKO, WACKER AND SIMILAR TYPE TAMPERS; BUGGYMOBILE; CAULKER, BANDER, PIPEWRAPPER, CONDUIT LAYER, PLASTIC PIPELAYER; CERTIFIED HAZARDOUS WASTE WORKER INCLUDING LEADE ABATEMENT; COMPACTORS OF ALL TYPES; CONCRETE AND MAGNESITE MIXER, 1/2 YD. AND UNDER; CONCRETE PAN WORK; CONCRETE SANDER; CONCRETE SAW; CRIBBER AND/OR SHORING; CUT GRANITE CURB SETTER; DRI-PAK-IT MACHINE; FALLER, LOGLOADER AND BUCKER; FORM RAISER, SLIP FORMS; GREEN CUTTER; HEADERBOARD, HUBSETTER, ALIGNER, BY ANY METHOD; HIGH PRESSURE BLOW PIPE (1-1/2"" OR OVER, 100 LBS. PRESSURE/OVER); HYDRO SEEDER AND SIMILAR TYPE; JACKHAMMER OPERATOR; JACKING OF PIPE OVER 12 INCHES; JACKSON AND SIMILAR TYPE COMPACTOR; KETTLE TENDER, POT AND WORKER APPLYING ASPHALT, LAY-KOLD, CREOSOTE, LIME, CAUSTIC AND SIMILAR TYPE MATERIALS (APPLYING MEANS APPLYING, DIPPING OR HANDLING OF SUCH MATERIALS); LAGGING, SHEETING, WHALING, BRACING, TRENCHJACKING, LAGGING HAMMER; MAGNESITE, EPOXYRESIN, FIBERGLASS, MASTIC WORKER (WET OR DRY); NO JOINT PIPE AND STRIPPING OF SAME, INCLUDING REPAIR OF VOIDS; PAVEMENT BREAKER AND SPADER, INCLUDING TOOL GRINDER; PERMA CURB; PIPELAYER (INCLUDING GRADE CHECKING IN CONNECTION WITH PIPELAYING); PRECAST-MANHOLE SETTER; PRESSURE PIPE TESTER; POST HOLE DIGGER, AIR, GAS AND ELECTRIC; POWER BROOM SWEEPER; POWER TAMPERS OF ALL TYPES (EXCEPT AS SHOWN IN GROUP 2); RAM SET GUN AND STUD GUN; RIPRAP STONEPAVER AND ROCK-SLINGER, INCLUDING PLACING OF SACKED CONCRETE AND/OR SAND (WET OR DRY) AND GABIONS AND SIMILAR TYPE; ROTARY SCARIFIER OR MULTIPLE HEAD CONCRETE CHIPPING SCARIFIER; ROTO AND DITCH WITCH; ROTOTILLER; SANDBLASTER, POT, GUN, NOZZLE OPERATORS; SIGNALLING AND RIGGING; TANK CLEANER; TREE CLIMBER; TURBO BLASTER; VIBRASCREED, BULL FLOAT IN CONNECTION WITH LABORERS' WORK; VIBRATOR; HAZARDOUS WASTE WORKER (LEAD REMOVAL); ASBESTOS AND MOLD REMOVAL WORKER. FOOTNOTES: LABORERS WORKING OFF OR WITH OR FROM BOS'N CHAIRS, SWINGING SCAFFOLDS, BELTS SHALL RECEIVE $0.25 PER HOUR ABOVE THE APPLICABLE WAGE RATE. GROUP 1-B: SEWER CLEANERS SHALL RECEIVE $4.00 PER DAY ABOVE GROUP 1 WAGE RATES. ""SEWER CLEANER"" MEANS ANY WORKER WHO HANDLES OR COMES IN CONTACT WITH RAW SEWAGE IN SMALL DIAMETER SEWERS. THOSE WHO WORK INSIDE RECENTLY ACTIVE, LARGE DIAMETER SEWERS, AND ALL RECENTLY ACTIVE SEWER MANHOLES SHAL RECEIVE $5.00 PER DAY ABOVE GROUP 1 WAGE RATES. GROUP 1-D: MAINTENANCE AND REPAIR TRACK AND ROAD BEDS. ALL EMPLOYEES PERFORMING WORK COVERED HEREIN SHALL RECEIVE $0.25 PER HOUR ABOVE THEIR REGULAR RATE FOR ALL WORK PERFORMED ON UNDERGROUND STRUCTURES NOT SPECIFICALLY COVERED HEREIN. THIS PARAGRAPH SHALL NOT BE CONSTRUED TO APPLY TO WORK BELOW GROUND LEVEL IN OPEN CUT. IT SHALL APPLY TO CUT AND COVER WORK OF SUBWAY CONSTRUCTION AFTER THE TEMPORARY COVER HAS BEEN PLACED. (SAN FRANCISCO AND SAN MATEO COUNTIES).....$ 36.50 27.30

LABORER, CONSTRUCTION CRAFT LABORERS: GROUP 1-A- JOY DRILL MODEL TWM-2A; GARDNER-DENVER MODEL DH143 AND SIMILAR TYPE DRILLS; TRACK DRILLER; JACK LEG DRILLER; WAGON DRILLER; MECHANICAL DRILLERS, ALL TYPES REGARDLESS OF TYPE OR METHOD OF POWER; MECHANICAL PIPE LAYERS, ALL TYPES REGARDLESS OF

TYPE OR METHOD OF POWER; BLASTER AND POWDER; ALL WORK OF LOADING, PLACING AND BLASTING OF ALL POWDER AND EXPLOSIVES OF WHATEVER TYPE REGARDLESS OF METHOD USED FOR SUCH LOADING AND PLACING; HIGH SCALERS (INCLUDING DRILLING OF SAME); TREE TOPPER; BIT GRINDER. GROUP 1-B: SEWER CLEANERS SHALL RECEIVE $4.00 PER DAY ABOVE GROUP 1 WAGE RATES. ""SEWER CLEANER"" MEANS ANY WORKER WHO HANDLES OR COMES IN CONTACT WITH RAW SEWAGE IN SMALL DIAMETER SEWERS. THOSE WHO WORK INSIDE RECENTLY ACTIVE, LARGE DIAMETER SEWERS, AND ALL RECENTLY ACTIVE SEWER MANHOLES SHAL RECEIVE $5.00 PER DAY ABOVE GROUP 1 WAGE RATES. GROUP 1-D: MAINTENANCE AND REPAIR TRACK AND ROAD BEDS. ALL EMPLOYEES PERFORMING WORK COVERED HEREIN SHALL RECEIVE $0.25 PER HOUR ABOVE THEIR REGULAR RATE FOR ALL WORK PERFORMED ON UNDERGROUND STRUCTURES NOT SPECIFICALLY COVERED HEREIN. THIS PARAGRAPH SHALL NOT BE CONSTRUED TO APPLY TO WORK BELOW GROUND LEVEL IN OPEN CUT. IT SHALL APPLY TO CUT AND COVER WORK OF SUBWAY CONSTRUCTION AFTER THE TEMPORARY COVER HAS BEEN PLACED. (SAN FRANCISCO AND SAN MATEO COUNTIES).....$ 36.72 27.30

LABORER, CONSTRUCTION CRAFT LABORERS: GROUP 1-C- BURNING AND WELDING IN CONNECTION WITH LABORERS' WORK; SYNTHETIC THERMOPLASTICS AND SIMILAR TYPE WELDING. FOOTNOTES: LABORERS WORKING OFF OR WITH OR FROM BOS'N CHAIRS, SWINGING SCAFFOLDS, BELTS SHALL RECEIVE $0.25 PER HOUR ABOVE THE APPLICABLE WAGE RATE. GROUP 1-B: SEWER CLEANERS SHALL RECEIVE $4.00 PER DAY ABOVE GROUP 1 WAGE RATES. ""SEWER CLEANER"" MEANS ANY WORKER WHO HANDLES OR COMES IN CONTACT WITH RAW SEWAGE IN SMALL DIAMETER SEWERS. THOSE WHO WORK INSIDE RECENTLY ACTIVE, LARGE DIAMETER SEWERS, AND ALL RECENTLY ACTIVE SEWER MANHOLES SHAL RECEIVE $5.00 PER DAY ABOVE GROUP 1 WAGE RATES. GROUP 1-D: MAINTENANCE AND REPAIR TRACK AND ROAD BEDS. ALL EMPLOYEES PERFORMING WORK COVERED HEREIN SHALL RECEIVE $0.25 PER HOUR ABOVE THEIR REGULAR RATE FOR ALL WORK PERFORMED ON UNDERGROUND STRUCTURES NOT SPECIFICALLY COVERED HEREIN. THIS PARAGRAPH SHALL NOT BE CONSTRUED TO APPLY TO WORK BELOW GROUND LEVEL IN OPEN CUT. IT SHALL APPLY TO CUT AND COVER WORK OF SUBWAY CONSTRUCTION AFTER THE TEMPORARY COVER HAS BEEN PLACED. (SAN FRANCISCO AND SAN MATEO COUNTIES)....$ 36.55 27.30

LABORER, CONSTRUCTION CRAFT LABORERS: GROUP 1-E- WORK ON AND/OR IN BELL HOLE FOOTINGS AND SHAFTS THEREOF, AND WORK ON AND IN DEEP FOOTINGS. (A DEEP FOOTING IS A HOLE 15 FEET OR MORE IN DEPTH.) IN THE EVENT THE DEPTH OF THE FOOTING IS UNKNOWN AT THE COMMENCEMENT OF EXCAVATION, AND THE FINAL DEPTH EXCEEDS 15 FEET, THE DEEP FOOTING WAGE RATE WOULD APPLY TO ALL EMPLOYEES FOR EACH AND EVERY DAY WORKED ON OR IN THE EXCAVATION OF THE FOOTING FROM THE DATE OF INCEPTION. FOOTNOTES: LABORERS WORKING OFF OR WITH OR FROM BOS'N CHAIRS, SWINGING SCAFFOLDS, BELTS SHALL RECEIVE $0.25 PER HOUR ABOVE THE APPLICABLE WAGE RATE. GROUP 1-B: SEWER CLEANERS SHALL RECEIVE $4.00 PER DAY ABOVE GROUP 1 WAGE RATES. ""SEWER CLEANER"" MEANS ANY WORKER WHO HANDLES OR COMES IN CONTACT WITH RAW SEWAGE IN SMALL DIAMETER SEWERS. THOSE WHO WORK INSIDE RECENTLY ACTIVE, LARGE DIAMETER SEWERS, AND ALL RECENTLY ACTIVE SEWER MANHOLES SHAL RECEIVE $5.00

PER DAY ABOVE GROUP 1 WAGE RATES. GROUP 1-D: MAINTENANCE AND REPAIR TRACK AND ROAD BEDS. ALL EMPLOYEES PERFORMING WORK COVERED HEREIN SHALL RECEIVE $0.25 PER HOUR ABOVE THEIR REGULAR RATE FOR ALL WORK PERFORMED ON UNDERGROUND STRUCTURES NOT SPECIFICALLY COVERED HEREIN. THIS PARAGRAPH SHALL NOT BE CONSTRUED TO APPLY TO WORK BELOW GROUND LEVEL IN OPEN CUT. IT SHALL APPLY TO CUT AND COVER WORK OF SUBWAY CONSTRUCTION AFTER THE TEMPORARY COVER HAS BEEN PLACED. (SAN FRANCISCO AND SAN MATEO COUNTIES).....$ 37.05 27.30

LABORER, CONSTRUCTION CRAFT LABORERS: GROUP 2- ASPHALT SHOVELER; CEMENT DUMPER AND HANDLING DRY CEMENT OR GYPSUM; CHOKE-SETTER AND RIGGER (CLEARING WORK); CONCRETE BUCKET DUMPER AND CHUTE; CONCRETE CHIPPING AND GRINDING; CONCRETE LABORER (WET OR DRY); DRILLER TENDER, CHUCK TENDER, NIPPER; GUINEA CHASER (STAKE), GROUT CREW; HIGH PRESSURE NOZZLE, ADDUCTOR; HYDRAULIC MONITOR (OVER 100 LBS. PRESSURE); LOADING AND UNLOADING, CARRYING AND HAULING OF ALL RODS AND MATERIALS FOR USE IN REINFORCING CONCRETE CONSTRUCTION; PITTSBURGH CHIPPER AND SIMILAR TYPE BRUSH SHREDDERS; SLOPER; SINGLE FOOT, HAND-HELD, PNEUMATIC TAMPER; ALL PNEUMATIC, AIR, GAS AND ELECTRIC TOOLS NOT LISTED IN GROUPS 1 THROUGH 1-F; JACKING OF PIPE - UNDER 12 INCHES. FOOTNOTES: LABORERS WORKING OFF OR WITH OR FROM BOS'N CHAIRS, SWINGING SCAFFOLDS, BELTS SHALL RECEIVE $0.25 PER HOUR ABOVE THE APPLICABLE WAGE RATE. GROUP 1-B: SEWER CLEANERS SHALL RECEIVE $4.00 PER DAY ABOVE GROUP 1 WAGE RATES. ""SEWER CLEANER"" MEANS ANY WORKER WHO HANDLES OR COMES IN CONTACT WITH RAW SEWAGE IN SMALL DIAMETER SEWERS. THOSE WHO WORK INSIDE RECENTLY ACTIVE, LARGE DIAMETER SEWERS, AND ALL RECENTLY ACTIVE SEWER MANHOLES SHAL RECEIVE $5.00 PER DAY ABOVE GROUP 1 WAGE RATES. GROUP 1-D: MAINTENANCE AND REPAIR TRACK AND ROAD BEDS. ALL EMPLOYEES PERFORMING WORK COVERED HEREIN SHALL RECEIVE $0.25 PER HOUR ABOVE THEIR REGULAR RATE FOR ALL WORK PERFORMED ON UNDERGROUND STRUCTURES NOT SPECIFICALLY COVERED HEREIN. THIS PARAGRAPH SHALL NOT BE CONSTRUED TO APPLY TO WORK BELOW GROUND LEVEL IN OPEN CUT. IT SHALL APPLY TO CUT AND COVER WORK OF SUBWAY CONSTRUCTION AFTER THE TEMPORARY COVER HAS BEEN PLACED. (SAN FRANCISCO AND SAN MATEO COUNTIES)....$ 36.35 27.30

LABORER, CONSTRUCTION CRAFT LABORERS: GROUP 3- CONSTRUCTION LABORERS, INCLUDING BRIDGE AND GENERAL LABORER; DUMP, LOAD SPOTTER; FLAG PERSON; FIRE WATCHER; FENCE ERECTOR; GUARDRAIL ERECTOR; GARDENER, HORTICULTURAL AND LANDSCAPE LABORER; JETTING; LIMBER, BRUSH LOADER AND PILER; PAVEMENT MARKER (BUTTON SETTER); MAINTENANCE, REPAIR TRACK AND ROAD BEDS; STREETCAR AND RAILROAD CONSTRUCTION TRACK LABORER; TEMPORARY AIR AND WATER LINES, VICTAULIC OR SIMILAR; TOOL ROOM ATTENDANT (JOBSITE ONLY). FOOTNOTES: LABORERS WORKING OFF OR WITH OR FROM BOS'N CHAIRS, SWINGING SCAFFOLDS, BELTS SHALL RECEIVE $0.25 PER HOUR ABOVE THE APPLICABLE WAGE RATE. GROUP 1-B: SEWER CLEANERS SHALL RECEIVE $4.00 PER DAY ABOVE GROUP 1 WAGE RATES. ""SEWER CLEANER"" MEANS ANY WORKER WHO HANDLES OR COMES IN CONTACT WITH RAW SEWAGE IN SMALL DIAMETER SEWERS. THOSE WHO WORK INSIDE RECENTLY ACTIVE, LARGE DIAMETER SEWERS, AND ALL RECENTLY ACTIVE SEWER

MANHOLES SHAL RECEIVE $5.00 PER DAY ABOVE GROUP 1 WAGE RATES. GROUP 1-D: MAINTENANCE AND REPAIR TRACK AND ROAD BEDS. ALL EMPLOYEES PERFORMING WORK COVERED HEREIN SHALL RECEIVE $0.25 PER HOUR ABOVE THEIR REGULAR RATE FOR ALL WORK PERFORMED ON UNDERGROUND STRUCTURES NOT SPECIFICALLY COVERED HEREIN. THIS PARAGRAPH SHALL NOT BE CONSTRUED TO APPLY TO WORK BELOW GROUND LEVEL IN OPEN CUT. IT SHALL APPLY TO CUT AND COVER WORK OF SUBWAY CONSTRUCTION AFTER THE TEMPORARY COVER HAS BEEN PLACED. (SAN FRANCISCO AND SAN MATEO COUNTIES)....$ 36.25 27.30

LABORER, CONSTRUCTION CRAFT LABORERS: GROUP 4- FINAL CLEAN-UP WORK OF DEBRIS, GROUNDS AND BUILDING INCLUDING BUT NOT LIMITED TO: STREET CLEANER; CLEANING AND WASHING WINDOWS; BRICK CLEANER (JOBSITE ONLY); MATERIAL CLEANER (JOBSITE ONLY). THE CLASSIFICATION ""MATERIAL CLEANER"" IS TO BE UTILIZED UNDER THE FOLLOWING CONDITIONS: A: AT DEMOLITION SITE FOR THE SALVAGE OF THE MATERIAL. B: AT THE CONCLUSION OF A JOB WHERE THE MATERIAL IS TO BE SALVAGED AND STOCKED TO BE REUSED ON ANOTHER JOB. C: FOR THE CLEANING OF SALVAGE MATERIAL AT THE JOBSITE OR TEMPORARY JOBSITE YARD. THE MATERIAL CLEANER CLASSIFICATION SHOULD NOT BE USED IN THE PERFORMANCE OF ""FORM STRIPPING, CLEANING AND OILING AND MOVING TO THE NEXT POINT OF ERECTION"". FOOTNOTES: LABORERS WORKING OFF OR WITH OR FROM BOS'N CHAIRS, SWINGING SCAFFOLDS, BELTS SHALL RECEIVE $0.25 PER HOUR ABOVE THE APPLICABLE WAGE RATE. GROUP 1-B: SEWER CLEANERS SHALL RECEIVE $4.00 PER DAY ABOVE GROUP 1 WAGE RATES. ""SEWER CLEANER"" MEANS ANY WORKER WHO HANDLES OR COMES IN CONTACT WITH RAW SEWAGE IN SMALL DIAMETER SEWERS. THOSE WHO WORK INSIDE RECENTLY ACTIVE, LARGE DIAMETER SEWERS, AND ALL RECENTLY ACTIVE SEWER MANHOLES SHAL RECEIVE $5.00 PER DAY ABOVE GROUP 1 WAGE RATES. GROUP 1-D: MAINTENANCE AND REPAIR TRACK AND ROAD BEDS. ALL EMPLOYEES PERFORMING WORK COVERED HEREIN SHALL RECEIVE $0.25 PER HOUR ABOVE THEIR REGULAR RATE FOR ALL WORK PERFORMED ON UNDERGROUND STRUCTURES NOT SPECIFICALLY COVERED HEREIN. THIS PARAGRAPH SHALL NOT BE CONSTRUED TO APPLY TO WORK BELOW GROUND LEVEL IN OPEN CUT. IT SHALL APPLY TO CUT AND COVER WORK OF SUBWAY CONSTRUCTION AFTER THE TEMPORARY COVER HAS BEEN PLACED. (SAN FRANCISCO AND SAN MATEO COUNTIES).....$ 29.94 27.30

LABORER, GUNITE: GROUP 1- STRUCTURAL NOZZLEMAN. FOOTNOTES: LABORERS WORKING OFF OR WITH OR FROM BOS'N CHAIRS, SWINGING SCAFFOLDS, BELTS SHALL RECEIVE $0.25 PER HOUR ABOVE THE APPLICABLE WAGE RATE. (SAN FRANCISCO AND SAN MATEO COUNTIES)......$ 37.46 27.30

LABORER, GUNITE: GROUP 2- NOZZLEMAN, GUNMAN, POTMAN, GROUNDMAN. FOOTNOTES: LABORERS WORKING OFF OR WITH OR FROM BOS'N CHAIRS, SWINGING SCAFFOLDS, BELTS SHALL RECEIVE $0.25 PER HOUR ABOVE THE APPLICABLE WAGE RATE. (SAN FRANCISCO AND SAN MATEO COUNTIES).....$ 36.96 27.30

LABORER, GUNITE: GROUP 3- REBOUNDMAN. FOOTNOTES: LABORERS WORKING OFF OR WITH OR FROM BOS'N CHAIRS, SWINGING SCAFFOLDS, BELTS SHALL RECEIVE $0.25 PER HOUR ABOVE THE APPLICABLE WAGE RATE. (SAN FRANCISCO AND SAN MATEO COUNTIES).....$ 36.37 27.30

LABORER, GUNITE: GROUP 4- GUINTE LABORER. FOOTNOTES: LABORERS WORKING OFF OR WITH OR FROM

BOS'N CHAIRS, SWINGING SCAFFOLDS, BELTS SHALL
RECEIVE $0.25 PER HOUR ABOVE THE APPLICABLE WAGE
RATE. (SAN FRANCISCO AND SAN MATEO COUNTIES)......$ 36.25 27.30
LABORER, WRECKING: GROUP 1- SKILLED WRECKER
(REMOVING AND SALVAGING OF SASH, WINDOWS, AND
MATERIALS). FOOTNOTES: LABORERS WORKING OFF OR
WITH OR FROM BOS'N CHAIRS, SWINGING SCAFFOLDS,
BELTS SHALL RECEIVE $0.25 PER HOUR ABOVE THE
APPLICABLE WAGE RATE. (SAN FRANCISCO AND SAN MATEO
COUNTIES).....$ 36.50 27.30
LABORER, WRECKING: GROUP 2- SEMI-SKILLED WRECKER
(SALVAGING OF OTHER BUILDING MATERIALS).
FOOTNOTES: LABORERS WORKING OFF OR WITH OR FROM
BOS'N CHAIRS, SWINGING SCAFFOLDS, BELTS SHALL
RECEIVE $0.25 PER HOUR ABOVE THE APPLICABLE WAGE
RATE. (SAN FRANCISCO AND SAN MATEO COUNTIES).....$ 36.35 27.30
LABORER: GARDENERS, HORTICULTURAL & LANDSCAPE
LABORERS - (1) New Construction. FOOTNOTES:
LABORERS WORKING OFF OR WITH OR FROM BOS'N CHAIRS,
SWINGING SCAFFOLDS, BELTS SHALL RECEIVE $0.25 PER
HOUR ABOVE THE APPLICABLE WAGE RATE. (SAN
FRANCISCO AND SAN MATEO COUNTIES).....$ 36.25 27.30
LABORER: GARDENERS, HORTICULTURAL & LANDSCAPE
LABORERS - (2) Establishment Warranty Period.
FOOTNOTES: LABORERS WORKING OFF OR WITH OR FROM
BOS'N CHAIRS, SWINGING SCAFFOLDS, BELTS SHALL
RECEIVE $0.25 PER HOUR ABOVE THE APPLICABLE WAGE
RATE. (SAN FRANCISCO AND SAN MATEO COUNTIES).....$ 29.94 27.30

LABO0261-011 07/01/2023

	Rates	Fringes
MASON TENDER, BRICK. FOOTNOTES: UNDERGROUND WORK SUCH AS SEWERS, MANHOLES, CATCH BASINS, SEWER PIPES, TELEPHONE CONDUITS, TUNNELS AND CUT TRENCHES: $5.00 PER DAY ADDITIONAL. WORK IN LIVE SEWAGE: $2.50 PER DAY ADDITIONAL. (SAN FRANCISCO AND SAN MATEO COUNTIES)	$ 37.05	27.45

LABO0261-014 07/01/2023

	Rates	Fringes
PLASTER TENDER. WORK ON A SWING STAGE SCAFFOLD: $1.00 PER HOUR ADDITIONAL. (SAN FRANCISCO AND SAN MATEO COUNTIES)	$ 41.93	30.32

LABO0270-003 07/01/2023

	Rates	Fringes
LABORER, TRAFFIC CONTROL/LANE CLOSURE: ESCORT DRIVER, FLAG PERSON (MONTEREY, SAN BENITO, AND SANTA CRUZ COUNTIES)	$ 36.26	27.30
LABORER, TRAFFIC CONTROL/LANE CLOSURE: ESCORT DRIVER, FLAG PERSON (SANTA CALARA COUNTY)	$ 37.26	27.30
LABORER, TRAFFIC CONTROL/LANE CLOSURE: TRAFFIC CONTROL PERSON I- LAYOUT OF TRAFFIC CONTROL, CRASH CUSHIONS, CONSTRUCTION AREA AND ROADSIDE SIGNAGE. (MONTEREY, SAN BENITO, AND SANTA CRUZ COUNTIES)	$ 36.56	27.30
LABORER, TRAFFIC CONTROL/LANE CLOSURE: TRAFFIC CONTROL PERSON I- LAYOUT OF TRAFFIC CONTROL, CRASH CUSHIONS, CONSTRUCTION AREA AND ROADSIDE SIGNAGE. (SANTA CALARA COUNTY)	$ 37.56	27.30
LABORER, TRAFFIC CONTROL/LANE CLOSURE: TRAFFIC CONTROL PERSON II- INSTALLATION AND REMOVAL OF TEMPORARY/PERMANENT SIGNS, MARKERS, DELINEATORS,		

AND CRASH CUSHIONS. (MONTEREY, SAN BENITO, AND
SANTA CRUZ COUNTIES).....$ 34.06 27.30
LABORER, TRAFFIC CONTROL/LANE CLOSURE: TRAFFIC
CONTROL PERSON II- INSTALLATION AND REMOVAL OF
TEMPORARY/PERMANENT SIGNS, MARKERS, DELINEATORS,
AND CRASH CUSHIONS. (SANTA CALARA COUNTY).....$ 35.06 27.30

LABO0270-004 06/26/2023

Rates Fringes

TUNNEL AND SHAFT LABORERS: GROUP 1- DIAMOND
DRILLER; GROUNDMEN; GUNITE AND SHOTCRETE NOZZLEMEN.
(MONTEREY, SAN BENITO, SANTA CLARA, AND SANTA CRUZ
COUNTIES).....$ 45.89 27.72
TUNNEL AND SHAFT LABORERS: GROUP 2- RODMEN; SHAFT
WORK & RAISE (BELOW ACTUAL OR EXCAVATED GROUND
LEVEL). (MONTEREY, SAN BENITO, SANTA CLARA, AND
SANTA CRUZ COUNTIES).....$ 45.66 27.72
TUNNEL AND SHAFT LABORERS: GROUP 3- BIT GRINDER;
BLASTER, DRILLER, POWDERMEN, HEADING; CHERRY
PICKERMEN - WHERE CAR IS LIFTED; CONCRETE FINISHER
IN TUNNEL; CONCRETE SCREEDMAN; GROUT PUMPMAN AND
POTMAN; GUNITE & SHOTCRETE GUNMAN & POTMAN;
HEADERMEN; HIGH PRESSURE NOZZLEMAN; MINER - TUNNEL,
INCLUDING TOP AND BOTTOM MAN ON SHAFT AND RAISE
WORK; NIPPER; NOZZLEMAN ON SLICK LINE; SANDBLASTER
- POTMAN, ROBOTIC SHOTCRETE PLACER, SEGMENT
ERECTOR, TUNNEL MUCK HAULER, STEEL FORM RAISER AND
SETTER; TIMBERMAN, RETIMBERMAN (WOOD OR STEEL OR
SUBSTITUTE MATERIALS THEREFORE); TUGGER (FOR TUNNEL
LABORER WORK); CABLE TENDER; CHUCK TENDER;
POWDERMAN - PRIMER HOUSE. (MONTEREY, SAN BENITO,
SANTA CLARA, AND SANTA CRUZ COUNTIES).....$ 45.41 27.72
TUNNEL AND SHAFT LABORERS: GROUP 4- VIBRATOR
OPERATOR, PAVEMENT BREAKER; BULL GANG - MUCKERS,
TRACKMEN; CONCRETE CREW - INCLUDES RODDING AND
SPREADING, DUMPMEN (ANY METHOD). (MONTEREY, SAN
BENITO, SANTA CLARA, AND SANTA CRUZ COUNTIES).....$ 44.96 27.72
TUNNEL AND SHAFT LABORERS: GROUP 5- GROUT CREW;
REBOUNDMAN; SWAMPER/ BRAKEMAN. (MONTEREY, SAN
BENITO, SANTA CLARA, AND SANTA CRUZ COUNTIES).....$ 44.42 27.72
TUNNEL AND SHAFT LABORERS: SHOTCRETE SPECIALIST.
(MONTEREY, SAN BENITO, SANTA CLARA, AND SANTA CRUZ
COUNTIES).....$ 46.41 27.72

LABO0270-005 07/01/2023

Rates Fringes

LABORER: MASON TENDER-BRICK. (MONTEREY AND SAN
BENITO COUNTIES).....$ 36.29 25.55

LABO0270-007 06/26/2023

Rates Fringes

LABORER (CONSTRUCTION CRAFT LABORERS) GROUP 1-F-
WIRE WINDING MACHINE IN CONNECTION WITH GUNITING OR
SHOT CRETE. FOOTNOTES: LABORERS WORKING OFF OR WITH
OR FROM BOS'N CHAIRS, SWINGING SCAFFOLDS, BELTS
SHALL RECEIVE $0.25 PER HOUR ABOVE THE APPLICABLE
WAGE RATE. GROUP 1-B: SEWER CLEANERS SHALL RECEIVE
$4.00 PER DAY ABOVE GROUP 1 WAGE RATES. ""SEWER
CLEANER"" MEANS ANY WORKER WHO HANDLES OR COMES IN
CONTACT WITH RAW SEWAGE IN SMALL DIAMETER SEWERS.
THOSE WHO WORK INSIDE RECENTLY ACTIVE, LARGE
DIAMETER SEWERS, AND ALL RECENTLY ACTIVE SEWER

MANHOLES SHAL RECEIVE $5.00 PER DAY ABOVE GROUP 1
WAGE RATES. GROUP 1-D: MAINTENANCE AND REPAIR
TRACK AND ROAD BEDS. ALL EMPLOYEES PERFORMING WORK
COVERED HEREIN SHALL RECEIVE $0.25 PER HOUR ABOVE
THEIR REGULAR RATE FOR ALL WORK PERFORMED ON
UNDERGROUND STRUCTURES NOT SPECIFICALLY COVERED
HEREIN. THIS PARAGRAPH SHALL NOT BE CONSTRUED TO
APPLY TO WORK BELOW GROUND LEVEL IN OPEN CUT. IT
SHALL APPLY TO CUT AND COVER WORK OF SUBWAY
CONSTRUCTION AFTER THE TEMPORARY COVER HAS BEEN
PLACED. (MONTEREY, SAN BENITO, AND SANTA CRUZ
COUNTIES).....$ 36.08 27.30
LABORER, CONSTRUCTION CRAFT LABORERS: CONSTRUCTION
SPECIALIST GROUP- ASPHALT IRONER AND RAKER;
CHAINSAW; LASER BEAM IN CONNECTION WITH LABORERS'
WORK; CAST-IN- PLACE MANHOLE FORM SETTER; PRESSURE
PIPELAYER; DAVIS TRENCHER - 300 OR SIMILAR TYPE
(AND ALL SMALL TRENCHERS); BLASTER; DIAMOND
DRILLER; MULTIPLE UNIT DRILL; HYDRAULIC DRILL.
FOOTNOTES: LABORERS WORKING OFF OR WITH OR FROM
BOS'N CHAIRS, SWINGING SCAFFOLDS, BELTS SHALL
RECEIVE $0.25 PER HOUR ABOVE THE APPLICABLE WAGE
RATE. GROUP 1-B: SEWER CLEANERS SHALL RECEIVE
$4.00 PER DAY ABOVE GROUP 1 WAGE RATES. ""SEWER
CLEANER"" MEANS ANY WORKER WHO HANDLES OR COMES IN
CONTACT WITH RAW SEWAGE IN SMALL DIAMETER SEWERS.
THOSE WHO WORK INSIDE RECENTLY ACTIVE, LARGE
DIAMETER SEWERS, AND ALL RECENTLY ACTIVE SEWER
MANHOLES SHAL RECEIVE $5.00 PER DAY ABOVE GROUP 1
WAGE RATES. GROUP 1-D: MAINTENANCE AND REPAIR
TRACK AND ROAD BEDS. ALL EMPLOYEES PERFORMING WORK
COVERED HEREIN SHALL RECEIVE $0.25 PER HOUR ABOVE
THEIR REGULAR RATE FOR ALL WORK PERFORMED ON
UNDERGROUND STRUCTURES NOT SPECIFICALLY COVERED
HEREIN. THIS PARAGRAPH SHALL NOT BE CONSTRUED TO
APPLY TO WORK BELOW GROUND LEVEL IN OPEN CUT. IT
SHALL APPLY TO CUT AND COVER WORK OF SUBWAY
CONSTRUCTION AFTER THE TEMPORARY COVER HAS BEEN
PLACED. (MONTEREY, SAN BENITO, AND SANTA CRUZ
COUNTIES).....$ 36.20 27.30
LABORER, CONSTRUCTION CRAFT LABORERS: GROUP 1-
ASPHALT SPREADER BOXES (ALL TYPES); BARKO, WACKER
AND SIMILAR TYPE TAMPERS; BUGGYMOBILE; CAULKER,
BANDER, PIPEWRAPPER, CONDUIT LAYER, PLASTIC
PIPELAYER; CERTIFIED HAZARDOUS WASTE WORKER
INCLUDING LEADE ABATEMENT; COMPACTORS OF ALL TYPES;
CONCRETE AND MAGNESITE MIXER, 1/2 YD. AND UNDER;
CONCRETE PAN WORK; CONCRETE SANDER; CONCRETE SAW;
CRIBBER AND/OR SHORING; CUT GRANITE CURB SETTER;
DRI-PAK-IT MACHINE; FALLER, LOGLOADER AND BUCKER;
FORM RAISER, SLIP FORMS; GREEN CUTTER; HEADERBOARD,
HUBSETTER, ALIGNER, BY ANY METHOD; HIGH PRESSURE
BLOW PIPE (1-1/2"" OR OVER, 100 LBS. PRESSURE/OVER);
HYDRO SEEDER AND SIMILAR TYPE; JACKHAMMER OPERATOR;
JACKING OF PIPE OVER 12 INCHES; JACKSON AND SIMILAR
TYPE COMPACTOR; KETTLE TENDER, POT AND WORKER
APPLYING ASPHALT, LAY-KOLD, CREOSOTE, LIME, CAUSTIC
AND SIMILAR TYPE MATERIALS (APPLYING MEANS
APPLYING, DIPPING OR HANDLING OF SUCH MATERIALS);
LAGGING, SHEETING, WHALING, BRACING, TRENCHJACKING,
LAGGING HAMMER; MAGNESITE, EPOXYRESIN, FIBERGLASS,
MASTIC WORKER (WET OR DRY); NO JOINT PIPE AND
STRIPPING OF SAME, INCLUDING REPAIR OF VOIDS;
PAVEMENT BREAKER AND SPADER, INCLUDING TOOL
GRINDER; PERMA CURB; PIPELAYER (INCLUDING GRADE

CHECKING IN CONNECTION WITH PIPELAYING); PRECAST-MANHOLE SETTER; PRESSURE PIPE TESTER; POST HOLE DIGGER, AIR, GAS AND ELECTRIC; POWER BROOM SWEEPER; POWER TAMPERS OF ALL TYPES (EXCEPT AS SHOWN IN GROUP 2); RAM SET GUN AND STUD GUN; RIPRAP STONEPAVER AND ROCK-SLINGER, INCLUDING PLACING OF SACKED CONCRETE AND/OR SAND (WET OR DRY) AND GABIONS AND SIMILAR TYPE; ROTARY SCARIFIER OR MULTIPLE HEAD CONCRETE CHIPPING SCARIFIER; ROTO AND DITCH WITCH; ROTOTILLER; SANDBLASTER, POT, GUN, NOZZLE OPERATORS; SIGNALLING AND RIGGING; TANK CLEANER; TREE CLIMBER; TURBO BLASTER; VIBRASCREED, BULL FLOAT IN CONNECTION WITH LABORERS' WORK; VIBRATOR; HAZARDOUS WASTE WORKER (LEAD REMOVAL); ASBESTOS AND MOLD REMOVAL WORKER. FOOTNOTES: LABORERS WORKING OFF OR WITH OR FROM BOS'N CHAIRS, SWINGING SCAFFOLDS, BELTS SHALL RECEIVE $0.25 PER HOUR ABOVE THE APPLICABLE WAGE RATE. GROUP 1-B: SEWER CLEANERS SHALL RECEIVE $4.00 PER DAY ABOVE GROUP 1 WAGE RATES. ""SEWER CLEANER"" MEANS ANY WORKER WHO HANDLES OR COMES IN CONTACT WITH RAW SEWAGE IN SMALL DIAMETER SEWERS. THOSE WHO WORK INSIDE RECENTLY ACTIVE, LARGE DIAMETER SEWERS, AND ALL RECENTLY ACTIVE SEWER MANHOLES SHAL RECEIVE $5.00 PER DAY ABOVE GROUP 1 WAGE RATES. GROUP 1-D: MAINTENANCE AND REPAIR TRACK AND ROAD BEDS. ALL EMPLOYEES PERFORMING WORK COVERED HEREIN SHALL RECEIVE $0.25 PER HOUR ABOVE THEIR REGULAR RATE FOR ALL WORK PERFORMED ON UNDERGROUND STRUCTURES NOT SPECIFICALLY COVERED HEREIN. THIS PARAGRAPH SHALL NOT BE CONSTRUED TO APPLY TO WORK BELOW GROUND LEVEL IN OPEN CUT. IT SHALL APPLY TO CUT AND COVER WORK OF SUBWAY CONSTRUCTION AFTER THE TEMPORARY COVER HAS BEEN PLACED. (MONTEREY, SAN BENITO, AND SANTA CRUZ COUNTIES).....$ 35.50 27.30

LABORER, CONSTRUCTION CRAFT LABORERS: GROUP 1-A- JOY DRILL MODEL TWM-2A; GARDNER-DENVER MODEL DH143 AND SIMILAR TYPE DRILLS; TRACK DRILLER; JACK LEG DRILLER; WAGON DRILLER; MECHANICAL DRILLERS, ALL TYPES REGARDLESS OF TYPE OR METHOD OF POWER; MECHANICAL PIPE LAYERS, ALL TYPES REGARDLESS OF TYPE OR METHOD OF POWER; BLASTER AND POWDER; ALL WORK OF LOADING, PLACING AND BLASTING OF ALL POWDER AND EXPLOSIVES OF WHATEVER TYPE REGARDLESS OF METHOD USED FOR SUCH LOADING AND PLACING; HIGH SCALERS (INCLUDING DRILLING OF SAME); TREE TOPPER; BIT GRINDER. GROUP 1-B: SEWER CLEANERS SHALL RECEIVE $4.00 PER DAY ABOVE GROUP 1 WAGE RATES. ""SEWER CLEANER"" MEANS ANY WORKER WHO HANDLES OR COMES IN CONTACT WITH RAW SEWAGE IN SMALL DIAMETER SEWERS. THOSE WHO WORK INSIDE RECENTLY ACTIVE, LARGE DIAMETER SEWERS, AND ALL RECENTLY ACTIVE SEWER MANHOLES SHAL RECEIVE $5.00 PER DAY ABOVE GROUP 1 WAGE RATES. GROUP 1-D: MAINTENANCE AND REPAIR TRACK AND ROAD BEDS. ALL EMPLOYEES PERFORMING WORK COVERED HEREIN SHALL RECEIVE $0.25 PER HOUR ABOVE THEIR REGULAR RATE FOR ALL WORK PERFORMED ON UNDERGROUND STRUCTURES NOT SPECIFICALLY COVERED HEREIN. THIS PARAGRAPH SHALL NOT BE CONSTRUED TO APPLY TO WORK BELOW GROUND LEVEL IN OPEN CUT. IT SHALL APPLY TO CUT AND COVER WORK OF SUBWAY CONSTRUCTION AFTER THE TEMPORARY COVER HAS BEEN PLACED. (MONTEREY, SAN BENITO, AND SANTA CRUZ COUNTIES).....$ 35.72 27.30

LABORER, CONSTRUCTION CRAFT LABORERS: GROUP 1-C-

BURNING AND WELDING IN CONNECTION WITH LABORERS' WORK; SYNTHETIC THERMOPLASTICS AND SIMILAR TYPE WELDING. FOOTNOTES: LABORERS WORKING OFF OR WITH OR FROM BOS'N CHAIRS, SWINGING SCAFFOLDS, BELTS SHALL RECEIVE $0.25 PER HOUR ABOVE THE APPLICABLE WAGE RATE. GROUP 1-B: SEWER CLEANERS SHALL RECEIVE $4.00 PER DAY ABOVE GROUP 1 WAGE RATES. ""SEWER CLEANER"" MEANS ANY WORKER WHO HANDLES OR COMES IN CONTACT WITH RAW SEWAGE IN SMALL DIAMETER SEWERS. THOSE WHO WORK INSIDE RECENTLY ACTIVE, LARGE DIAMETER SEWERS, AND ALL RECENTLY ACTIVE SEWER MANHOLES SHAL RECEIVE $5.00 PER DAY ABOVE GROUP 1 WAGE RATES. GROUP 1-D: MAINTENANCE AND REPAIR TRACK AND ROAD BEDS. ALL EMPLOYEES PERFORMING WORK COVERED HEREIN SHALL RECEIVE $0.25 PER HOUR ABOVE THEIR REGULAR RATE FOR ALL WORK PERFORMED ON UNDERGROUND STRUCTURES NOT SPECIFICALLY COVERED HEREIN. THIS PARAGRAPH SHALL NOT BE CONSTRUED TO APPLY TO WORK BELOW GROUND LEVEL IN OPEN CUT. IT SHALL APPLY TO CUT AND COVER WORK OF SUBWAY CONSTRUCTION AFTER THE TEMPORARY COVER HAS BEEN PLACED. (MONTEREY, SAN BENITO, AND SANTA CRUZ COUNTIES).....$ 35.55 27.30

LABORER, CONSTRUCTION CRAFT LABORERS: GROUP 1-E- WORK ON AND/OR IN BELL HOLE FOOTINGS AND SHAFTS THEREOF, AND WORK ON AND IN DEEP FOOTINGS. (A DEEP FOOTING IS A HOLE 15 FEET OR MORE IN DEPTH.) IN THE EVENT THE DEPTH OF THE FOOTING IS UNKNOWN AT THE COMMENCEMENT OF EXCAVATION, AND THE FINAL DEPTH EXCEEDS 15 FEET, THE DEEP FOOTING WAGE RATE WOULD APPLY TO ALL EMPLOYEES FOR EACH AND EVERY DAY WORKED ON OR IN THE EXCAVATION OF THE FOOTING FROM THE DATE OF INCEPTION. FOOTNOTES: LABORERS WORKING OFF OR WITH OR FROM BOS'N CHAIRS, SWINGING SCAFFOLDS, BELTS SHALL RECEIVE $0.25 PER HOUR ABOVE THE APPLICABLE WAGE RATE. GROUP 1-B: SEWER CLEANERS SHALL RECEIVE $4.00 PER DAY ABOVE GROUP 1 WAGE RATES. ""SEWER CLEANER"" MEANS ANY WORKER WHO HANDLES OR COMES IN CONTACT WITH RAW SEWAGE IN SMALL DIAMETER SEWERS. THOSE WHO WORK INSIDE RECENTLY ACTIVE, LARGE DIAMETER SEWERS, AND ALL RECENTLY ACTIVE SEWER MANHOLES SHAL RECEIVE $5.00 PER DAY ABOVE GROUP 1 WAGE RATES. GROUP 1-D: MAINTENANCE AND REPAIR TRACK AND ROAD BEDS. ALL EMPLOYEES PERFORMING WORK COVERED HEREIN SHALL RECEIVE $0.25 PER HOUR ABOVE THEIR REGULAR RATE FOR ALL WORK PERFORMED ON UNDERGROUND STRUCTURES NOT SPECIFICALLY COVERED HEREIN. THIS PARAGRAPH SHALL NOT BE CONSTRUED TO APPLY TO WORK BELOW GROUND LEVEL IN OPEN CUT. IT SHALL APPLY TO CUT AND COVER WORK OF SUBWAY CONSTRUCTION AFTER THE TEMPORARY COVER HAS BEEN PLACED. (MONTEREY, SAN BENITO, AND SANTA CRUZ COUNTIES).....$ 36.05 27.30

LABORER, CONSTRUCTION CRAFT LABORERS: GROUP 2- ASPHALT SHOVELER; CEMENT DUMPER AND HANDLING DRY CEMENT OR GYPSUM; CHOKE-SETTER AND RIGGER (CLEARING WORK); CONCRETE BUCKET DUMPER AND CHUTE; CONCRETE CHIPPING AND GRINDING; CONCRETE LABORER (WET OR DRY); DRILLER TENDER, CHUCK TENDER, NIPPER; GUINEA CHASER (STAKE), GROUT CREW; HIGH PRESSURE NOZZLE, ADDUCTOR; HYDRAULIC MONITOR (OVER 100 LBS. PRESSURE); LOADING AND UNLOADING, CARRYING AND HAULING OF ALL RODS AND MATERIALS FOR USE IN REINFORCING CONCRETE CONSTRUCTION; PITTSBURGH CHIPPER AND SIMILAR TYPE BRUSH SHREDDERS; SLOPER;

SINGLE FOOT, HAND-HELD, PNEUMATIC TAMPER; ALL PNEUMATIC, AIR, GAS AND ELECTRIC TOOLS NOT LISTED IN GROUPS 1 THROUGH 1-F; JACKING OF PIPE - UNDER 12 INCHES. FOOTNOTES: LABORERS WORKING OFF OR WITH OR FROM BOS'N CHAIRS, SWINGING SCAFFOLDS, BELTS SHALL RECEIVE $0.25 PER HOUR ABOVE THE APPLICABLE WAGE RATE. GROUP 1-B: SEWER CLEANERS SHALL RECEIVE $4.00 PER DAY ABOVE GROUP 1 WAGE RATES. ""SEWER CLEANER"" MEANS ANY WORKER WHO HANDLES OR COMES IN CONTACT WITH RAW SEWAGE IN SMALL DIAMETER SEWERS. THOSE WHO WORK INSIDE RECENTLY ACTIVE, LARGE DIAMETER SEWERS, AND ALL RECENTLY ACTIVE SEWER MANHOLES SHAL RECEIVE $5.00 PER DAY ABOVE GROUP 1 WAGE RATES. GROUP 1-D: MAINTENANCE AND REPAIR TRACK AND ROAD BEDS. ALL EMPLOYEES PERFORMING WORK COVERED HEREIN SHALL RECEIVE $0.25 PER HOUR ABOVE THEIR REGULAR RATE FOR ALL WORK PERFORMED ON UNDERGROUND STRUCTURES NOT SPECIFICALLY COVERED HEREIN. THIS PARAGRAPH SHALL NOT BE CONSTRUED TO APPLY TO WORK BELOW GROUND LEVEL IN OPEN CUT. IT SHALL APPLY TO CUT AND COVER WORK OF SUBWAY CONSTRUCTION AFTER THE TEMPORARY COVER HAS BEEN PLACED. (MONTEREY, SAN BENITO, AND SANTA CRUZ COUNTIES).....$ 35.35 27.30

LABORER, CONSTRUCTION CRAFT LABORERS: GROUP 3- CONSTRUCTION LABORERS, INCLUDING BRIDGE AND GENERAL LABORER; DUMP, LOAD SPOTTER; FLAG PERSON; FIRE WATCHER; FENCE ERECTOR; GUARDRAIL ERECTOR; GARDENER, HORTICULTURAL AND LANDSCAPE LABORER; JETTING; LIMBER, BRUSH LOADER AND PILER; PAVEMENT MARKER (BUTTON SETTER); MAINTENANCE, REPAIR TRACK AND ROAD BEDS; STREETCAR AND RAILROAD CONSTRUCTION TRACK LABORER; TEMPORARY AIR AND WATER LINES, VICTAULIC OR SIMILAR; TOOL ROOM ATTENDANT (JOBSITE ONLY). FOOTNOTES: LABORERS WORKING OFF OR WITH OR FROM BOS'N CHAIRS, SWINGING SCAFFOLDS, BELTS SHALL RECEIVE $0.25 PER HOUR ABOVE THE APPLICABLE WAGE RATE. GROUP 1-B: SEWER CLEANERS SHALL RECEIVE $4.00 PER DAY ABOVE GROUP 1 WAGE RATES. ""SEWER CLEANER"" MEANS ANY WORKER WHO HANDLES OR COMES IN CONTACT WITH RAW SEWAGE IN SMALL DIAMETER SEWERS. THOSE WHO WORK INSIDE RECENTLY ACTIVE, LARGE DIAMETER SEWERS, AND ALL RECENTLY ACTIVE SEWER MANHOLES SHAL RECEIVE $5.00 PER DAY ABOVE GROUP 1 WAGE RATES. GROUP 1-D: MAINTENANCE AND REPAIR TRACK AND ROAD BEDS. ALL EMPLOYEES PERFORMING WORK COVERED HEREIN SHALL RECEIVE $0.25 PER HOUR ABOVE THEIR REGULAR RATE FOR ALL WORK PERFORMED ON UNDERGROUND STRUCTURES NOT SPECIFICALLY COVERED HEREIN. THIS PARAGRAPH SHALL NOT BE CONSTRUED TO APPLY TO WORK BELOW GROUND LEVEL IN OPEN CUT. IT SHALL APPLY TO CUT AND COVER WORK OF SUBWAY CONSTRUCTION AFTER THE TEMPORARY COVER HAS BEEN PLACED. (MONTEREY, SAN BENITO, AND SANTA CRUZ COUNTIES).....$ 35.25 27.30

LABORER, CONSTRUCTION CRAFT LABORERS: GROUP 4- FINAL CLEAN-UP WORK OF DEBRIS, GROUNDS AND BUILDING INCLUDING BUT NOT LIMITED TO: STREET CLEANER; CLEANING AND WASHING WINDOWS; BRICK CLEANER (JOBSITE ONLY); MATERIAL CLEANER (JOBSITE ONLY). THE CLASSIFICATION ""MATERIAL CLEANER"" IS TO BE UTILIZED UNDER THE FOLLOWING CONDITIONS: A: AT DEMOLITION SITE FOR THE SALVAGE OF THE MATERIAL. B: AT THE CONCLUSION OF A JOB WHERE THE MATERIAL IS TO BE SALVAGED AND STOCKED TO BE REUSED ON ANOTHER

JOB. C: FOR THE CLEANING OF SALVAGE MATERIAL AT THE JOBSITE OR TEMPORARY JOBSITE YARD. THE MATERIAL CLEANER CLASSIFICATION SHOULD NOT BE USED IN THE PERFORMANCE OF ""FORM STRIPPING, CLEANING AND OILING AND MOVING TO THE NEXT POINT OF ERECTION"". FOOTNOTES: LABORERS WORKING OFF OR WITH OR FROM BOS'N CHAIRS, SWINGING SCAFFOLDS, BELTS SHALL RECEIVE $0.25 PER HOUR ABOVE THE APPLICABLE WAGE RATE. GROUP 1-B: SEWER CLEANERS SHALL RECEIVE $4.00 PER DAY ABOVE GROUP 1 WAGE RATES. ""SEWER CLEANER"" MEANS ANY WORKER WHO HANDLES OR COMES IN CONTACT WITH RAW SEWAGE IN SMALL DIAMETER SEWERS. THOSE WHO WORK INSIDE RECENTLY ACTIVE, LARGE DIAMETER SEWERS, AND ALL RECENTLY ACTIVE SEWER MANHOLES SHAL RECEIVE $5.00 PER DAY ABOVE GROUP 1 WAGE RATES. GROUP 1-D: MAINTENANCE AND REPAIR TRACK AND ROAD BEDS. ALL EMPLOYEES PERFORMING WORK COVERED HEREIN SHALL RECEIVE $0.25 PER HOUR ABOVE THEIR REGULAR RATE FOR ALL WORK PERFORMED ON UNDERGROUND STRUCTURES NOT SPECIFICALLY COVERED HEREIN. THIS PARAGRAPH SHALL NOT BE CONSTRUED TO APPLY TO WORK BELOW GROUND LEVEL IN OPEN CUT. IT SHALL APPLY TO CUT AND COVER WORK OF SUBWAY CONSTRUCTION AFTER THE TEMPORARY COVER HAS BEEN PLACED. (MONTEREY, SAN BENITO, AND SANTA CRUZ COUNTIES).....$ 28.94 27.30

LABORER, GUNITE: GROUP 1- STRUCTURAL NOZZLEMAN. FOOTNOTES: LABORERS WORKING OFF OR WITH OR FROM BOS'N CHAIRS, SWINGING SCAFFOLDS, BELTS SHALL RECEIVE $0.25 PER HOUR ABOVE THE APPLICABLE WAGE RATE. (MONTEREY, SAN BENITO, AND SANTA CRUZ COUNTIES).....$ 36.46 27.30

LABORER, GUNITE: GROUP 2- NOZZLEMAN, GUNMAN, POTMAN, GROUNDMAN. FOOTNOTES: LABORERS WORKING OFF OR WITH OR FROM BOS'N CHAIRS, SWINGING SCAFFOLDS, BELTS SHALL RECEIVE $0.25 PER HOUR ABOVE THE APPLICABLE WAGE RATE. (MONTEREY, SAN BENITO, AND SANTA CRUZ COUNTIES).....$ 35.96 27.30

LABORER, GUNITE: GROUP 3- REBOUNDMAN. FOOTNOTES: LABORERS WORKING OFF OR WITH OR FROM BOS'N CHAIRS, SWINGING SCAFFOLDS, BELTS SHALL RECEIVE $0.25 PER HOUR ABOVE THE APPLICABLE WAGE RATE. (MONTEREY, SAN BENITO, AND SANTA CRUZ COUNTIES).....$ 35.37 27.30

LABORER, GUNITE: GROUP 4- GUINTE LABORER. FOOTNOTES: LABORERS WORKING OFF OR WITH OR FROM BOS'N CHAIRS, SWINGING SCAFFOLDS, BELTS SHALL RECEIVE $0.25 PER HOUR ABOVE THE APPLICABLE WAGE RATE. (MONTEREY, SAN BENITO, AND SANTA CRUZ COUNTIES).....$ 35.25 27.30

LABORER, WRECKING: GROUP 1- SKILLED WRECKER (REMOVING AND SALVAGING OF SASH, WINDOWS, AND MATERIALS). FOOTNOTES: LABORERS WORKING OFF OR WITH OR FROM BOS'N CHAIRS, SWINGING SCAFFOLDS, BELTS SHALL RECEIVE $0.25 PER HOUR ABOVE THE APPLICABLE WAGE RATE. (MONTEREY, SAN BENITO, AND SANTA CRUZ COUNTIES).....$ 35.50 27.30

LABORER, WRECKING: GROUP 2- SEMI-SKILLED WRECKER (SALVAGING OF OTHER BUILDING MATERIALS). FOOTNOTES: LABORERS WORKING OFF OR WITH OR FROM BOS'N CHAIRS, SWINGING SCAFFOLDS, BELTS SHALL RECEIVE $0.25 PER HOUR ABOVE THE APPLICABLE WAGE RATE. (MONTEREY, SAN BENITO, AND SANTA CRUZ COUNTIES).....$ 35.35 27.30

LABORER: GARDENERS, HORTICULTURAL & LANDSCAPE LABORERS - (1) New Construction. FOOTNOTES:

LABORERS WORKING OFF OR WITH OR FROM BOS'N CHAIRS, SWINGING SCAFFOLDS, BELTS SHALL RECEIVE $0.25 PER HOUR ABOVE THE APPLICABLE WAGE RATE. (MONTEREY, SAN BENITO, AND SANTA CRUZ COUNTIES).....$ 35.25 27.30
LABORER: GARDENERS, HORTICULTURAL & LANDSCAPE LABORERS - (2) Establishment Warranty Period. FOOTNOTES: LABORERS WORKING OFF OR WITH OR FROM BOS'N CHAIRS, SWINGING SCAFFOLDS, BELTS SHALL RECEIVE $0.25 PER HOUR ABOVE THE APPLICABLE WAGE RATE. (MONTEREY, SAN BENITO, AND SANTA CRUZ COUNTIES).....$ 28.94 27.30

LABO0270-010 06/26/2023

	Rates	Fringes
LABORER (CONSTRUCTION CRAFT LABORERS) GROUP 1-F- WIRE WINDING MACHINE IN CONNECTION WITH GUNITING OR SHOT CRETE. FOOTNOTES: LABORERS WORKING OFF OR WITH OR FROM BOS'N CHAIRS, SWINGING SCAFFOLDS, BELTS SHALL RECEIVE $0.25 PER HOUR ABOVE THE APPLICABLE WAGE RATE. GROUP 1-B: SEWER CLEANERS SHALL RECEIVE $4.00 PER DAY ABOVE GROUP 1 WAGE RATES. ""SEWER CLEANER"" MEANS ANY WORKER WHO HANDLES OR COMES IN CONTACT WITH RAW SEWAGE IN SMALL DIAMETER SEWERS. THOSE WHO WORK INSIDE RECENTLY ACTIVE, LARGE DIAMETER SEWERS, AND ALL RECENTLY ACTIVE SEWER MANHOLES SHAL RECEIVE $5.00 PER DAY ABOVE GROUP 1 WAGE RATES. GROUP 1-D: MAINTENANCE AND REPAIR TRACK AND ROAD BEDS. ALL EMPLOYEES PERFORMING WORK COVERED HEREIN SHALL RECEIVE $0.25 PER HOUR ABOVE THEIR REGULAR RATE FOR ALL WORK PERFORMED ON UNDERGROUND STRUCTURES NOT SPECIFICALLY COVERED HEREIN. THIS PARAGRAPH SHALL NOT BE CONSTRUED TO APPLY TO WORK BELOW GROUND LEVEL IN OPEN CUT. IT SHALL APPLY TO CUT AND COVER WORK OF SUBWAY CONSTRUCTION AFTER THE TEMPORARY COVER HAS BEEN PLACED. (SANTA CLARA COUNTY).....$	37.08	27.30
LABORER, CONSTRUCTION CRAFT LABORERS: CONSTRUCTION SPECIALIST GROUP- ASPHALT IRONER AND RAKER; CHAINSAW; LASER BEAM IN CONNECTION WITH LABORERS' WORK; CAST-IN- PLACE MANHOLE FORM SETTER; PRESSURE PIPELAYER; DAVIS TRENCHER - 300 OR SIMILAR TYPE (AND ALL SMALL TRENCHERS); BLASTER; DIAMOND DRILLER; MULTIPLE UNIT DRILL; HYDRAULIC DRILL. FOOTNOTES: LABORERS WORKING OFF OR WITH OR FROM BOS'N CHAIRS, SWINGING SCAFFOLDS, BELTS SHALL RECEIVE $0.25 PER HOUR ABOVE THE APPLICABLE WAGE RATE. GROUP 1-B: SEWER CLEANERS SHALL RECEIVE $4.00 PER DAY ABOVE GROUP 1 WAGE RATES. ""SEWER CLEANER"" MEANS ANY WORKER WHO HANDLES OR COMES IN CONTACT WITH RAW SEWAGE IN SMALL DIAMETER SEWERS. THOSE WHO WORK INSIDE RECENTLY ACTIVE, LARGE DIAMETER SEWERS, AND ALL RECENTLY ACTIVE SEWER MANHOLES SHAL RECEIVE $5.00 PER DAY ABOVE GROUP 1 WAGE RATES. GROUP 1-D: MAINTENANCE AND REPAIR TRACK AND ROAD BEDS. ALL EMPLOYEES PERFORMING WORK COVERED HEREIN SHALL RECEIVE $0.25 PER HOUR ABOVE THEIR REGULAR RATE FOR ALL WORK PERFORMED ON UNDERGROUND STRUCTURES NOT SPECIFICALLY COVERED HEREIN. THIS PARAGRAPH SHALL NOT BE CONSTRUED TO APPLY TO WORK BELOW GROUND LEVEL IN OPEN CUT. IT SHALL APPLY TO CUT AND COVER WORK OF SUBWAY CONSTRUCTION AFTER THE TEMPORARY COVER HAS BEEN PLACED. (SANTA CLARA COUNTY).....$	37.20	27.30
LABORER, CONSTRUCTION CRAFT LABORERS: GROUP 1-		

ASPHALT SPREADER BOXES (ALL TYPES); BARKO, WACKER AND SIMILAR TYPE TAMPERS; BUGGYMOBILE; CAULKER, BANDER, PIPEWRAPPER, CONDUIT LAYER, PLASTIC PIPELAYER; CERTIFIED HAZARDOUS WASTE WORKER INCLUDING LEADE ABATEMENT; COMPACTORS OF ALL TYPES; CONCRETE AND MAGNESITE MIXER, 1/2 YD. AND UNDER; CONCRETE PAN WORK; CONCRETE SANDER; CONCRETE SAW; CRIBBER AND/OR SHORING; CUT GRANITE CURB SETTER; DRI-PAK-IT MACHINE; FALLER, LOGLOADER AND BUCKER; FORM RAISER, SLIP FORMS; GREEN CUTTER; HEADERBOARD, HUBSETTER, ALIGNER, BY ANY METHOD; HIGH PRESSURE BLOW PIPE (1-1/2"" OR OVER, 100 LBS. PRESSURE/OVER); HYDRO SEEDER AND SIMILAR TYPE; JACKHAMMER OPERATOR; JACKING OF PIPE OVER 12 INCHES; JACKSON AND SIMILAR TYPE COMPACTOR; KETTLE TENDER, POT AND WORKER APPLYING ASPHALT, LAY-KOLD, CREOSOTE, LIME, CAUSTIC AND SIMILAR TYPE MATERIALS (APPLYING MEANS APPLYING, DIPPING OR HANDLING OF SUCH MATERIALS); LAGGING, SHEETING, WHALING, BRACING, TRENCHJACKING, LAGGING HAMMER; MAGNESITE, EPOXYRESIN, FIBERGLASS, MASTIC WORKER (WET OR DRY); NO JOINT PIPE AND STRIPPING OF SAME, INCLUDING REPAIR OF VOIDS; PAVEMENT BREAKER AND SPADER, INCLUDING TOOL GRINDER; PERMA CURB; PIPELAYER (INCLUDING GRADE CHECKING IN CONNECTION WITH PIPELAYING); PRECAST-MANHOLE SETTER; PRESSURE PIPE TESTER; POST HOLE DIGGER, AIR, GAS AND ELECTRIC; POWER BROOM SWEEPER; POWER TAMPERS OF ALL TYPES (EXCEPT AS SHOWN IN GROUP 2); RAM SET GUN AND STUD GUN; RIPRAP STONEPAVER AND ROCK-SLINGER, INCLUDING PLACING OF SACKED CONCRETE AND/OR SAND (WET OR DRY) AND GABIONS AND SIMILAR TYPE; ROTARY SCARIFIER OR MULTIPLE HEAD CONCRETE CHIPPING SCARIFIER; ROTO AND DITCH WITCH; ROTOTILLER; SANDBLASTER, POT, GUN, NOZZLE OPERATORS; SIGNALLING AND RIGGING; TANK CLEANER; TREE CLIMBER; TURBO BLASTER; VIBRASCREED, BULL FLOAT IN CONNECTION WITH LABORERS' WORK; VIBRATOR; HAZARDOUS WASTE WORKER (LEAD REMOVAL); ASBESTOS AND MOLD REMOVAL WORKER. FOOTNOTES: LABORERS WORKING OFF OR WITH OR FROM BOS'N CHAIRS, SWINGING SCAFFOLDS, BELTS SHALL RECEIVE $0.25 PER HOUR ABOVE THE APPLICABLE WAGE RATE. GROUP 1-B: SEWER CLEANERS SHALL RECEIVE $4.00 PER DAY ABOVE GROUP 1 WAGE RATES. ""SEWER CLEANER"" MEANS ANY WORKER WHO HANDLES OR COMES IN CONTACT WITH RAW SEWAGE IN SMALL DIAMETER SEWERS. THOSE WHO WORK INSIDE RECENTLY ACTIVE, LARGE DIAMETER SEWERS, AND ALL RECENTLY ACTIVE SEWER MANHOLES SHAL RECEIVE $5.00 PER DAY ABOVE GROUP 1 WAGE RATES. GROUP 1-D: MAINTENANCE AND REPAIR TRACK AND ROAD BEDS. ALL EMPLOYEES PERFORMING WORK COVERED HEREIN SHALL RECEIVE $0.25 PER HOUR ABOVE THEIR REGULAR RATE FOR ALL WORK PERFORMED ON UNDERGROUND STRUCTURES NOT SPECIFICALLY COVERED HEREIN. THIS PARAGRAPH SHALL NOT BE CONSTRUED TO APPLY TO WORK BELOW GROUND LEVEL IN OPEN CUT. IT SHALL APPLY TO CUT AND COVER WORK OF SUBWAY CONSTRUCTION AFTER THE TEMPORARY COVER HAS BEEN PLACED. (SANTA CLARA COUNTY).....$ 36.50 27.30

LABORER, CONSTRUCTION CRAFT LABORERS: GROUP 1-A- JOY DRILL MODEL TWM-2A; GARDNER-DENVER MODEL DH143 AND SIMILAR TYPE DRILLS; TRACK DRILLER; JACK LEG DRILLER; WAGON DRILLER; MECHANICAL DRILLERS, ALL TYPES REGARDLESS OF TYPE OR METHOD OF POWER; MECHANICAL PIPE LAYERS, ALL TYPES REGARDLESS OF TYPE OR METHOD OF POWER; BLASTER AND POWDER; ALL

WORK OF LOADING, PLACING AND BLASTING OF ALL POWDER AND EXPLOSIVES OF WHATEVER TYPE REGARDLESS OF METHOD USED FOR SUCH LOADING AND PLACING; HIGH SCALERS (INCLUDING DRILLING OF SAME); TREE TOPPER; BIT GRINDER. GROUP 1-B: SEWER CLEANERS SHALL RECEIVE $4.00 PER DAY ABOVE GROUP 1 WAGE RATES. ""SEWER CLEANER"" MEANS ANY WORKER WHO HANDLES OR COMES IN CONTACT WITH RAW SEWAGE IN SMALL DIAMETER SEWERS. THOSE WHO WORK INSIDE RECENTLY ACTIVE, LARGE DIAMETER SEWERS, AND ALL RECENTLY ACTIVE SEWER MANHOLES SHAL RECEIVE $5.00 PER DAY ABOVE GROUP 1 WAGE RATES. GROUP 1-D: MAINTENANCE AND REPAIR TRACK AND ROAD BEDS. ALL EMPLOYEES PERFORMING WORK COVERED HEREIN SHALL RECEIVE $0.25 PER HOUR ABOVE THEIR REGULAR RATE FOR ALL WORK PERFORMED ON UNDERGROUND STRUCTURES NOT SPECIFICALLY COVERED HEREIN. THIS PARAGRAPH SHALL NOT BE CONSTRUED TO APPLY TO WORK BELOW GROUND LEVEL IN OPEN CUT. IT SHALL APPLY TO CUT AND COVER WORK OF SUBWAY CONSTRUCTION AFTER THE TEMPORARY COVER HAS BEEN PLACED. (SANTA CLARA COUNTY).....$ 36.72 27.30

LABORER, CONSTRUCTION CRAFT LABORERS: GROUP 1-C- BURNING AND WELDING IN CONNECTION WITH LABORERS' WORK; SYNTHETIC THERMOPLASTICS AND SIMILAR TYPE WELDING. FOOTNOTES: LABORERS WORKING OFF OR WITH OR FROM BOS'N CHAIRS, SWINGING SCAFFOLDS, BELTS SHALL RECEIVE $0.25 PER HOUR ABOVE THE APPLICABLE WAGE RATE. GROUP 1-B: SEWER CLEANERS SHALL RECEIVE $4.00 PER DAY ABOVE GROUP 1 WAGE RATES. ""SEWER CLEANER"" MEANS ANY WORKER WHO HANDLES OR COMES IN CONTACT WITH RAW SEWAGE IN SMALL DIAMETER SEWERS. THOSE WHO WORK INSIDE RECENTLY ACTIVE, LARGE DIAMETER SEWERS, AND ALL RECENTLY ACTIVE SEWER MANHOLES SHAL RECEIVE $5.00 PER DAY ABOVE GROUP 1 WAGE RATES. GROUP 1-D: MAINTENANCE AND REPAIR TRACK AND ROAD BEDS. ALL EMPLOYEES PERFORMING WORK COVERED HEREIN SHALL RECEIVE $0.25 PER HOUR ABOVE THEIR REGULAR RATE FOR ALL WORK PERFORMED ON UNDERGROUND STRUCTURES NOT SPECIFICALLY COVERED HEREIN. THIS PARAGRAPH SHALL NOT BE CONSTRUED TO APPLY TO WORK BELOW GROUND LEVEL IN OPEN CUT. IT SHALL APPLY TO CUT AND COVER WORK OF SUBWAY CONSTRUCTION AFTER THE TEMPORARY COVER HAS BEEN PLACED. (SANTA CLARA COUNTY).....$ 36.55 27.30

LABORER, CONSTRUCTION CRAFT LABORERS: GROUP 1-E- WORK ON AND/OR IN BELL HOLE FOOTINGS AND SHAFTS THEREOF, AND WORK ON AND IN DEEP FOOTINGS. (A DEEP FOOTING IS A HOLE 15 FEET OR MORE IN DEPTH.) IN THE EVENT THE DEPTH OF THE FOOTING IS UNKNOWN AT THE COMMENCEMENT OF EXCAVATION, AND THE FINAL DEPTH EXCEEDS 15 FEET, THE DEEP FOOTING WAGE RATE WOULD APPLY TO ALL EMPLOYEES FOR EACH AND EVERY DAY WORKED ON OR IN THE EXCAVATION OF THE FOOTING FROM THE DATE OF INCEPTION. FOOTNOTES: LABORERS WORKING OFF OR WITH OR FROM BOS'N CHAIRS, SWINGING SCAFFOLDS, BELTS SHALL RECEIVE $0.25 PER HOUR ABOVE THE APPLICABLE WAGE RATE. GROUP 1-B: SEWER CLEANERS SHALL RECEIVE $4.00 PER DAY ABOVE GROUP 1 WAGE RATES. ""SEWER CLEANER"" MEANS ANY WORKER WHO HANDLES OR COMES IN CONTACT WITH RAW SEWAGE IN SMALL DIAMETER SEWERS. THOSE WHO WORK INSIDE RECENTLY ACTIVE, LARGE DIAMETER SEWERS, AND ALL RECENTLY ACTIVE SEWER MANHOLES SHAL RECEIVE $5.00 PER DAY ABOVE GROUP 1 WAGE RATES. GROUP 1-D: MAINTENANCE AND REPAIR TRACK AND ROAD BEDS. ALL

EMPLOYEES PERFORMING WORK COVERED HEREIN SHALL RECEIVE $0.25 PER HOUR ABOVE THEIR REGULAR RATE FOR ALL WORK PERFORMED ON UNDERGROUND STRUCTURES NOT SPECIFICALLY COVERED HEREIN. THIS PARAGRAPH SHALL NOT BE CONSTRUED TO APPLY TO WORK BELOW GROUND LEVEL IN OPEN CUT. IT SHALL APPLY TO CUT AND COVER WORK OF SUBWAY CONSTRUCTION AFTER THE TEMPORARY COVER HAS BEEN PLACED. (SANTA CLARA COUNTY).....$ 37.05 27.30

LABORER, CONSTRUCTION CRAFT LABORERS: GROUP 2- ASPHALT SHOVELER; CEMENT DUMPER AND HANDLING DRY CEMENT OR GYPSUM; CHOKE-SETTER AND RIGGER (CLEARING WORK); CONCRETE BUCKET DUMPER AND CHUTE; CONCRETE CHIPPING AND GRINDING; CONCRETE LABORER (WET OR DRY); DRILLER TENDER, CHUCK TENDER, NIPPER; GUINEA CHASER (STAKE), GROUT CREW; HIGH PRESSURE NOZZLE, ADDUCTOR; HYDRAULIC MONITOR (OVER 100 LBS. PRESSURE); LOADING AND UNLOADING, CARRYING AND HAULING OF ALL RODS AND MATERIALS FOR USE IN REINFORCING CONCRETE CONSTRUCTION; PITTSBURGH CHIPPER AND SIMILAR TYPE BRUSH SHREDDERS; SLOPER; SINGLE FOOT, HAND-HELD, PNEUMATIC TAMPER; ALL PNEUMATIC, AIR, GAS AND ELECTRIC TOOLS NOT LISTED IN GROUPS 1 THROUGH 1-F; JACKING OF PIPE - UNDER 12 INCHES. FOOTNOTES: LABORERS WORKING OFF OR WITH OR FROM BOS'N CHAIRS, SWINGING SCAFFOLDS, BELTS SHALL RECEIVE $0.25 PER HOUR ABOVE THE APPLICABLE WAGE RATE. GROUP 1-B: SEWER CLEANERS SHALL RECEIVE $4.00 PER DAY ABOVE GROUP 1 WAGE RATES. ""SEWER CLEANER"" MEANS ANY WORKER WHO HANDLES OR COMES IN CONTACT WITH RAW SEWAGE IN SMALL DIAMETER SEWERS. THOSE WHO WORK INSIDE RECENTLY ACTIVE, LARGE DIAMETER SEWERS, AND ALL RECENTLY ACTIVE SEWER MANHOLES SHAL RECEIVE $5.00 PER DAY ABOVE GROUP 1 WAGE RATES. GROUP 1-D: MAINTENANCE AND REPAIR TRACK AND ROAD BEDS. ALL EMPLOYEES PERFORMING WORK COVERED HEREIN SHALL RECEIVE $0.25 PER HOUR ABOVE THEIR REGULAR RATE FOR ALL WORK PERFORMED ON UNDERGROUND STRUCTURES NOT SPECIFICALLY COVERED HEREIN. THIS PARAGRAPH SHALL NOT BE CONSTRUED TO APPLY TO WORK BELOW GROUND LEVEL IN OPEN CUT. IT SHALL APPLY TO CUT AND COVER WORK OF SUBWAY CONSTRUCTION AFTER THE TEMPORARY COVER HAS BEEN PLACED. (SANTA CLARA COUNTY).....$ 36.35 27.30

LABORER, CONSTRUCTION CRAFT LABORERS: GROUP 3- CONSTRUCTION LABORERS, INCLUDING BRIDGE AND GENERAL LABORER; DUMP, LOAD SPOTTER; FLAG PERSON; FIRE WATCHER; FENCE ERECTOR; GUARDRAIL ERECTOR; GARDENER, HORTICULTURAL AND LANDSCAPE LABORER; JETTING; LIMBER, BRUSH LOADER AND PILER; PAVEMENT MARKER (BUTTON SETTER); MAINTENANCE, REPAIR TRACK AND ROAD BEDS; STREETCAR AND RAILROAD CONSTRUCTION TRACK LABORER; TEMPORARY AIR AND WATER LINES, VICTAULIC OR SIMILAR; TOOL ROOM ATTENDANT (JOBSITE ONLY). FOOTNOTES: LABORERS WORKING OFF OR WITH OR FROM BOS'N CHAIRS, SWINGING SCAFFOLDS, BELTS SHALL RECEIVE $0.25 PER HOUR ABOVE THE APPLICABLE WAGE RATE. GROUP 1-B: SEWER CLEANERS SHALL RECEIVE $4.00 PER DAY ABOVE GROUP 1 WAGE RATES. ""SEWER CLEANER"" MEANS ANY WORKER WHO HANDLES OR COMES IN CONTACT WITH RAW SEWAGE IN SMALL DIAMETER SEWERS. THOSE WHO WORK INSIDE RECENTLY ACTIVE, LARGE DIAMETER SEWERS, AND ALL RECENTLY ACTIVE SEWER MANHOLES SHAL RECEIVE $5.00 PER DAY ABOVE GROUP 1 WAGE RATES. GROUP 1-D: MAINTENANCE AND REPAIR TRACK AND ROAD BEDS. ALL EMPLOYEES PERFORMING WORK

COVERED HEREIN SHALL RECEIVE $0.25 PER HOUR ABOVE THEIR REGULAR RATE FOR ALL WORK PERFORMED ON UNDERGROUND STRUCTURES NOT SPECIFICALLY COVERED HEREIN. THIS PARAGRAPH SHALL NOT BE CONSTRUED TO APPLY TO WORK BELOW GROUND LEVEL IN OPEN CUT. IT SHALL APPLY TO CUT AND COVER WORK OF SUBWAY CONSTRUCTION AFTER THE TEMPORARY COVER HAS BEEN PLACED. (SANTA CLARA COUNTY).....$ 36.25 27.30

LABORER, CONSTRUCTION CRAFT LABORERS: GROUP 4- FINAL CLEAN-UP WORK OF DEBRIS, GROUNDS AND BUILDING INCLUDING BUT NOT LIMITED TO: STREET CLEANER; CLEANING AND WASHING WINDOWS; BRICK CLEANER (JOBSITE ONLY); MATERIAL CLEANER (JOBSITE ONLY). THE CLASSIFICATION ""MATERIAL CLEANER"" IS TO BE UTILIZED UNDER THE FOLLOWING CONDITIONS: A: AT DEMOLITION SITE FOR THE SALVAGE OF THE MATERIAL. B: AT THE CONCLUSION OF A JOB WHERE THE MATERIAL IS TO BE SALVAGED AND STOCKED TO BE REUSED ON ANOTHER JOB. C: FOR THE CLEANING OF SALVAGE MATERIAL AT THE JOBSITE OR TEMPORARY JOBSITE YARD. THE MATERIAL CLEANER CLASSIFICATION SHOULD NOT BE USED IN THE PERFORMANCE OF ""FORM STRIPPING, CLEANING AND OILING AND MOVING TO THE NEXT POINT OF ERECTION"". FOOTNOTES: LABORERS WORKING OFF OR WITH OR FROM BOS'N CHAIRS, SWINGING SCAFFOLDS, BELTS SHALL RECEIVE $0.25 PER HOUR ABOVE THE APPLICABLE WAGE RATE. GROUP 1-B: SEWER CLEANERS SHALL RECEIVE $4.00 PER DAY ABOVE GROUP 1 WAGE RATES. ""SEWER CLEANER"" MEANS ANY WORKER WHO HANDLES OR COMES IN CONTACT WITH RAW SEWAGE IN SMALL DIAMETER SEWERS. THOSE WHO WORK INSIDE RECENTLY ACTIVE, LARGE DIAMETER SEWERS, AND ALL RECENTLY ACTIVE SEWER MANHOLES SHAL RECEIVE $5.00 PER DAY ABOVE GROUP 1 WAGE RATES. GROUP 1-D: MAINTENANCE AND REPAIR TRACK AND ROAD BEDS. ALL EMPLOYEES PERFORMING WORK COVERED HEREIN SHALL RECEIVE $0.25 PER HOUR ABOVE THEIR REGULAR RATE FOR ALL WORK PERFORMED ON UNDERGROUND STRUCTURES NOT SPECIFICALLY COVERED HEREIN. THIS PARAGRAPH SHALL NOT BE CONSTRUED TO APPLY TO WORK BELOW GROUND LEVEL IN OPEN CUT. IT SHALL APPLY TO CUT AND COVER WORK OF SUBWAY CONSTRUCTION AFTER THE TEMPORARY COVER HAS BEEN PLACED. (SANTA CLARA COUNTY).....$ 29.94 27.30

LABORER, GUNITE: GROUP 1- STRUCTURAL NOZZLEMAN. FOOTNOTES: LABORERS WORKING OFF OR WITH OR FROM BOS'N CHAIRS, SWINGING SCAFFOLDS, BELTS SHALL RECEIVE $0.25 PER HOUR ABOVE THE APPLICABLE WAGE RATE. (SANTA CLARA COUNTY).....$ 37.46 27.30

LABORER, GUNITE: GROUP 2- NOZZLEMAN, GUNMAN, POTMAN, GROUNDMAN. FOOTNOTES: LABORERS WORKING OFF OR WITH OR FROM BOS'N CHAIRS, SWINGING SCAFFOLDS, BELTS SHALL RECEIVE $0.25 PER HOUR ABOVE THE APPLICABLE WAGE RATE. (SANTA CLARA COUNTY).....$ 36.96 27.30

LABORER, GUNITE: GROUP 3- REBOUNDMAN. FOOTNOTES: LABORERS WORKING OFF OR WITH OR FROM BOS'N CHAIRS, SWINGING SCAFFOLDS, BELTS SHALL RECEIVE $0.25 PER HOUR ABOVE THE APPLICABLE WAGE RATE. (SANTA CLARA COUNTY).....$ 36.37 27.30

LABORER, GUNITE: GROUP 4- GUINTE LABORER. FOOTNOTES: LABORERS WORKING OFF OR WITH OR FROM BOS'N CHAIRS, SWINGING SCAFFOLDS, BELTS SHALL RECEIVE $0.25 PER HOUR ABOVE THE APPLICABLE WAGE RATE. (SANTA CLARA COUNTY).....$ 36.25 27.30

LABORER, WRECKING: GROUP 1- SKILLED WRECKER (REMOVING AND SALVAGING OF SASH, WINDOWS, AND

MATERIALS). FOOTNOTES: LABORERS WORKING OFF OR WITH OR FROM BOS'N CHAIRS, SWINGING SCAFFOLDS, BELTS SHALL RECEIVE $0.25 PER HOUR ABOVE THE APPLICABLE WAGE RATE. (SANTA CLARA COUNTY).....$ 36.50 27.30

LABORER, WRECKING: GROUP 2- SEMI-SKILLED WRECKER (SALVAGING OF OTHER BUILDING MATERIALS). FOOTNOTES: LABORERS WORKING OFF OR WITH OR FROM BOS'N CHAIRS, SWINGING SCAFFOLDS, BELTS SHALL RECEIVE $0.25 PER HOUR ABOVE THE APPLICABLE WAGE RATE. (SANTA CLARA COUNTY).....$ 36.35 27.30

LABORER: GARDENERS, HORTICULTURAL & LANDSCAPE LABORERS - (1) New Construction. FOOTNOTES: LABORERS WORKING OFF OR WITH OR FROM BOS'N CHAIRS, SWINGING SCAFFOLDS, BELTS SHALL RECEIVE $0.25 PER HOUR ABOVE THE APPLICABLE WAGE RATE. (SANTA CLARA COUNTY).....$ 36.25 27.30

LABORER: GARDENERS, HORTICULTURAL & LANDSCAPE LABORERS - (2) Establishment Warranty Period. FOOTNOTES: LABORERS WORKING OFF OR WITH OR FROM BOS'N CHAIRS, SWINGING SCAFFOLDS, BELTS SHALL RECEIVE $0.25 PER HOUR ABOVE THE APPLICABLE WAGE RATE. (SANTA CLARA COUNTY).....$ 29.94 27.30

LABO0270-011 07/01/2023

	Rates	Fringes
LABORER, PLASTER TENDER. WORK ON A SWING STAGE SCAFFOLD: $1.00 PER HOUR ADDITIONAL. (MONTEREY, SAN BENITO, SANTA CRUZ, SANTA CLARA COUNTIES) .....$	40.68	29.68

LABO0294-001 07/01/2023

	Rates	Fringes
LABORER, BRICK: MASON TENDER-BRICK. (FRESNO, KINGS AND MADERA COUNTIES).....$	36.29	25.55

LABO0294-002 07/01/2023

	Rates	Fringes
LABORER, TRAFFIC CONTROL/LANE CLOSURE: ESCORT DRIVER, FLAG PERSON (FRESNO, KINGS, AND MADERA COUNTIES).....$	36.26	27.30
LABORER, TRAFFIC CONTROL/LANE CLOSURE: TRAFFIC CONTROL PERSON I- LAYOUT OF TRAFFIC CONTROL, CRASH CUSHIONS, CONSTRUCTION AREA AND ROADSIDE SIGNAGE. (FRESNO, KINGS, AND MADERA COUNTIES).....$	36.56	27.30
LABORER, TRAFFIC CONTROL/LANE CLOSURE: TRAFFIC CONTROL PERSON II- INSTALLATION AND REMOVAL OF TEMPORARY/PERMANENT SIGNS, MARKERS, DELINEATORS AND CRASH CUSHIONS. (FRESNO, KINGS, AND MADERA COUNTIES).....$	34.06	27.30

LABO0294-005 06/26/2023

	Rates	Fringes
TUNNEL AND SHAFT LABORERS: GROUP 1- DIAMOND DRILLER; GROUNDMEN; GUNITE AND SHOTCRETE NOZZLEMEN. (FRESNO, KINGS, AND MADERA COUNTIES).....$	45.89	27.72
TUNNEL AND SHAFT LABORERS: GROUP 2- RODMEN; SHAFT WORK & RAISE (BELOW ACTUAL OR EXCAVATED GROUND LEVEL). (FRESNO, KINGS, AND MADERA COUNTIES).....$	45.66	27.72
TUNNEL AND SHAFT LABORERS: GROUP 3- BIT GRINDER; BLASTER, DRILLER, POWDERMEN, HEADING; CHERRY PICKERMEN - WHERE CAR IS LIFTED; CONCRETE FINISHER IN TUNNEL; CONCRETE SCREEDMAN; GROUT PUMPMAN AND		

POTMAN; GUNITE & SHOTCRETE GUNMAN & POTMAN; HEADERMEN; HIGH PRESSURE NOZZLEMAN; MINER - TUNNEL, INCLUDING TOP AND BOTTOM MAN ON SHAFT AND RAISE WORK; NIPPER; NOZZLEMAN ON SLICK LINE; SANDBLASTER - POTMAN, ROBOTIC SHOTCRETE PLACER, SEGMENT ERECTOR, TUNNEL MUCK HAULER, STEEL FORM RAISER AND SETTER; TIMBERMAN, RETIMBERMAN (WOOD OR STEEL OR SUBSTITUTE MATERIALS THEREFORE); TUGGER (FOR TUNNEL LABORER WORK); CABLE TENDER; CHUCK TENDER; POWDERMAN - PRIMER HOUSE. (FRESNO, KINGS, AND MADERA COUNTIES).....$ 45.41 27.72

TUNNEL AND SHAFT LABORERS: GROUP 4- VIBRATOR OPERATOR, PAVEMENT BREAKER; BULL GANG - MUCKERS, TRACKMEN; CONCRETE CREW - INCLUDES RODDING AND SPREADING, DUMPMEN (ANY METHOD). (FRESNO, KINGS, AND MADERA COUNTIES).....$ 44.96 27.72

TUNNEL AND SHAFT LABORERS: GROUP 5- GROUT CREW; REBOUNDMAN; SWAMPER/ BRAKEMAN. (FRESNO, KINGS, AND MADERA COUNTIES).....$ 44.42 27.72

TUNNEL AND SHAFT LABORERS: SHOTCRETE SPECIALIST. (FRESNO, KINGS, AND MADERA COUNTIES).....$ 46.41 27.72

LABO0294-008 06/26/2023

	Rates	Fringes

LABORER (CONSTRUCTION CRAFT LABORERS) GROUP 1-F- WIRE WINDING MACHINE IN CONNECTION WITH GUNITING OR SHOT CRETE. FOOTNOTES: LABORERS WORKING OFF OR WITH OR FROM BOS'N CHAIRS, SWINGING SCAFFOLDS, BELTS SHALL RECEIVE $0.25 PER HOUR ABOVE THE APPLICABLE WAGE RATE. GROUP 1-B: SEWER CLEANERS SHALL RECEIVE $4.00 PER DAY ABOVE GROUP 1 WAGE RATES. ""SEWER CLEANER"" MEANS ANY WORKER WHO HANDLES OR COMES IN CONTACT WITH RAW SEWAGE IN SMALL DIAMETER SEWERS. THOSE WHO WORK INSIDE RECENTLY ACTIVE, LARGE DIAMETER SEWERS, AND ALL RECENTLY ACTIVE SEWER MANHOLES SHAL RECEIVE $5.00 PER DAY ABOVE GROUP 1 WAGE RATES. GROUP 1-D: MAINTENANCE AND REPAIR TRACK AND ROAD BEDS. ALL EMPLOYEES PERFORMING WORK COVERED HEREIN SHALL RECEIVE $0.25 PER HOUR ABOVE THEIR REGULAR RATE FOR ALL WORK PERFORMED ON UNDERGROUND STRUCTURES NOT SPECIFICALLY COVERED HEREIN. THIS PARAGRAPH SHALL NOT BE CONSTRUED TO APPLY TO WORK BELOW GROUND LEVEL IN OPEN CUT. IT SHALL APPLY TO CUT AND COVER WORK OF SUBWAY CONSTRUCTION AFTER THE TEMPORARY COVER HAS BEEN PLACED. (FRESNO, KINGS, AND MADERA COUNTIES).....$ 36.08 27.30

LABORER, CONSTRUCTION CRAFT LABORERS: CONSTRUCTION SPECIALIST GROUP- ASPHALT IRONER AND RAKER; CHAINSAW; LASER BEAM IN CONNECTION WITH LABORERS' WORK; CAST-IN- PLACE MANHOLE FORM SETTER; PRESSURE PIPELAYER; DAVIS TRENCHER - 300 OR SIMILAR TYPE (AND ALL SMALL TRENCHERS); BLASTER; DIAMOND DRILLER; MULTIPLE UNIT DRILL; HYDRAULIC DRILL. FOOTNOTES: LABORERS WORKING OFF OR WITH OR FROM BOS'N CHAIRS, SWINGING SCAFFOLDS, BELTS SHALL RECEIVE $0.25 PER HOUR ABOVE THE APPLICABLE WAGE RATE. GROUP 1-B: SEWER CLEANERS SHALL RECEIVE $4.00 PER DAY ABOVE GROUP 1 WAGE RATES. ""SEWER CLEANER"" MEANS ANY WORKER WHO HANDLES OR COMES IN CONTACT WITH RAW SEWAGE IN SMALL DIAMETER SEWERS. THOSE WHO WORK INSIDE RECENTLY ACTIVE, LARGE DIAMETER SEWERS, AND ALL RECENTLY ACTIVE SEWER MANHOLES SHAL RECEIVE $5.00 PER DAY ABOVE GROUP 1 WAGE RATES. GROUP 1-D: MAINTENANCE AND REPAIR

TRACK AND ROAD BEDS. ALL EMPLOYEES PERFORMING WORK COVERED HEREIN SHALL RECEIVE $0.25 PER HOUR ABOVE THEIR REGULAR RATE FOR ALL WORK PERFORMED ON UNDERGROUND STRUCTURES NOT SPECIFICALLY COVERED HEREIN. THIS PARAGRAPH SHALL NOT BE CONSTRUED TO APPLY TO WORK BELOW GROUND LEVEL IN OPEN CUT. IT SHALL APPLY TO CUT AND COVER WORK OF SUBWAY CONSTRUCTION AFTER THE TEMPORARY COVER HAS BEEN PLACED. (FRESNO, KINGS, AND MADERA COUNTIES).....$ 36.20 27.30

LABORER, CONSTRUCTION CRAFT LABORERS: GROUP 1- ASPHALT SPREADER BOXES (ALL TYPES); BARKO, WACKER AND SIMILAR TYPE TAMPERS; BUGGYMOBILE; CAULKER, BANDER, PIPEWRAPPER, CONDUIT LAYER, PLASTIC PIPELAYER; CERTIFIED HAZARDOUS WASTE WORKER INCLUDING LEADE ABATEMENT; COMPACTORS OF ALL TYPES; CONCRETE AND MAGNESITE MIXER, 1/2 YD. AND UNDER; CONCRETE PAN WORK; CONCRETE SANDER; CONCRETE SAW; CRIBBER AND/OR SHORING; CUT GRANITE CURB SETTER; DRI-PAK-IT MACHINE; FALLER, LOGLOADER AND BUCKER; FORM RAISER, SLIP FORMS; GREEN CUTTER; HEADERBOARD, HUBSETTER, ALIGNER, BY ANY METHOD; HIGH PRESSURE BLOW PIPE (1-1/2"" OR OVER, 100 LBS. PRESSURE/OVER); HYDRO SEEDER AND SIMILAR TYPE; JACKHAMMER OPERATOR; JACKING OF PIPE OVER 12 INCHES; JACKSON AND SIMILAR TYPE COMPACTOR; KETTLE TENDER, POT AND WORKER APPLYING ASPHALT, LAY-KOLD, CREOSOTE, LIME, CAUSTIC AND SIMILAR TYPE MATERIALS (APPLYING MEANS APPLYING, DIPPING OR HANDLING OF SUCH MATERIALS); LAGGING, SHEETING, WHALING, BRACING, TRENCHJACKING, LAGGING HAMMER; MAGNESITE, EPOXYRESIN, FIBERGLASS, MASTIC WORKER (WET OR DRY); NO JOINT PIPE AND STRIPPING OF SAME, INCLUDING REPAIR OF VOIDS; PAVEMENT BREAKER AND SPADER, INCLUDING TOOL GRINDER; PERMA CURB; PIPELAYER (INCLUDING GRADE CHECKING IN CONNECTION WITH PIPELAYING); PRECAST-MANHOLE SETTER; PRESSURE PIPE TESTER; POST HOLE DIGGER, AIR, GAS AND ELECTRIC; POWER BROOM SWEEPER; POWER TAMPERS OF ALL TYPES (EXCEPT AS SHOWN IN GROUP 2); RAM SET GUN AND STUD GUN; RIPRAP STONEPAVER AND ROCK-SLINGER, INCLUDING PLACING OF SACKED CONCRETE AND/OR SAND (WET OR DRY) AND GABIONS AND SIMILAR TYPE; ROTARY SCARIFIER OR MULTIPLE HEAD CONCRETE CHIPPING SCARIFIER; ROTO AND DITCH WITCH; ROTOTILLER; SANDBLASTER, POT, GUN, NOZZLE OPERATORS; SIGNALLING AND RIGGING; TANK CLEANER; TREE CLIMBER; TURBO BLASTER; VIBRASCREED, BULL FLOAT IN CONNECTION WITH LABORERS' WORK; VIBRATOR; HAZARDOUS WASTE WORKER (LEAD REMOVAL); ASBESTOS AND MOLD REMOVAL WORKER. FOOTNOTES: LABORERS WORKING OFF OR WITH OR FROM BOS'N CHAIRS, SWINGING SCAFFOLDS, BELTS SHALL RECEIVE $0.25 PER HOUR ABOVE THE APPLICABLE WAGE RATE. GROUP 1-B: SEWER CLEANERS SHALL RECEIVE $4.00 PER DAY ABOVE GROUP 1 WAGE RATES. ""SEWER CLEANER"" MEANS ANY WORKER WHO HANDLES OR COMES IN CONTACT WITH RAW SEWAGE IN SMALL DIAMETER SEWERS. THOSE WHO WORK INSIDE RECENTLY ACTIVE, LARGE DIAMETER SEWERS, AND ALL RECENTLY ACTIVE SEWER MANHOLES SHAL RECEIVE $5.00 PER DAY ABOVE GROUP 1 WAGE RATES. GROUP 1-D: MAINTENANCE AND REPAIR TRACK AND ROAD BEDS. ALL EMPLOYEES PERFORMING WORK COVERED HEREIN SHALL RECEIVE $0.25 PER HOUR ABOVE THEIR REGULAR RATE FOR ALL WORK PERFORMED ON UNDERGROUND STRUCTURES NOT SPECIFICALLY COVERED HEREIN. THIS PARAGRAPH SHALL NOT BE CONSTRUED TO APPLY TO WORK BELOW GROUND

LEVEL IN OPEN CUT. IT SHALL APPLY TO CUT AND COVER WORK OF SUBWAY CONSTRUCTION AFTER THE TEMPORARY COVER HAS BEEN PLACED. (FRESNO, KINGS, AND MADERA COUNTIES).....$ 35.50 27.30

LABORER, CONSTRUCTION CRAFT LABORERS: GROUP 1-A-JOY DRILL MODEL TWM-2A; GARDNER-DENVER MODEL DH143 AND SIMILAR TYPE DRILLS; TRACK DRILLER; JACK LEG DRILLER; WAGON DRILLER; MECHANICAL DRILLERS, ALL TYPES REGARDLESS OF TYPE OR METHOD OF POWER; MECHANICAL PIPE LAYERS, ALL TYPES REGARDLESS OF TYPE OR METHOD OF POWER; BLASTER AND POWDER; ALL WORK OF LOADING, PLACING AND BLASTING OF ALL POWDER AND EXPLOSIVES OF WHATEVER TYPE REGARDLESS OF METHOD USED FOR SUCH LOADING AND PLACING; HIGH SCALERS (INCLUDING DRILLING OF SAME); TREE TOPPER; BIT GRINDER. GROUP 1-B: SEWER CLEANERS SHALL RECEIVE $4.00 PER DAY ABOVE GROUP 1 WAGE RATES. ""SEWER CLEANER"" MEANS ANY WORKER WHO HANDLES OR COMES IN CONTACT WITH RAW SEWAGE IN SMALL DIAMETER SEWERS. THOSE WHO WORK INSIDE RECENTLY ACTIVE, LARGE DIAMETER SEWERS, AND ALL RECENTLY ACTIVE SEWER MANHOLES SHAL RECEIVE $5.00 PER DAY ABOVE GROUP 1 WAGE RATES. GROUP 1-D: MAINTENANCE AND REPAIR TRACK AND ROAD BEDS. ALL EMPLOYEES PERFORMING WORK COVERED HEREIN SHALL RECEIVE $0.25 PER HOUR ABOVE THEIR REGULAR RATE FOR ALL WORK PERFORMED ON UNDERGROUND STRUCTURES NOT SPECIFICALLY COVERED HEREIN. THIS PARAGRAPH SHALL NOT BE CONSTRUED TO APPLY TO WORK BELOW GROUND LEVEL IN OPEN CUT. IT SHALL APPLY TO CUT AND COVER WORK OF SUBWAY CONSTRUCTION AFTER THE TEMPORARY COVER HAS BEEN PLACED. (FRESNO, KINGS, AND MADERA COUNTIES).....$ 35.72 27.30

LABORER, CONSTRUCTION CRAFT LABORERS: GROUP 1-C-BURNING AND WELDING IN CONNECTION WITH LABORERS' WORK; SYNTHETIC THERMOPLASTICS AND SIMILAR TYPE WELDING. FOOTNOTES: LABORERS WORKING OFF OR WITH OR FROM BOS'N CHAIRS, SWINGING SCAFFOLDS, BELTS SHALL RECEIVE $0.25 PER HOUR ABOVE THE APPLICABLE WAGE RATE. GROUP 1-B: SEWER CLEANERS SHALL RECEIVE $4.00 PER DAY ABOVE GROUP 1 WAGE RATES. ""SEWER CLEANER"" MEANS ANY WORKER WHO HANDLES OR COMES IN CONTACT WITH RAW SEWAGE IN SMALL DIAMETER SEWERS. THOSE WHO WORK INSIDE RECENTLY ACTIVE, LARGE DIAMETER SEWERS, AND ALL RECENTLY ACTIVE SEWER MANHOLES SHAL RECEIVE $5.00 PER DAY ABOVE GROUP 1 WAGE RATES. GROUP 1-D: MAINTENANCE AND REPAIR TRACK AND ROAD BEDS. ALL EMPLOYEES PERFORMING WORK COVERED HEREIN SHALL RECEIVE $0.25 PER HOUR ABOVE THEIR REGULAR RATE FOR ALL WORK PERFORMED ON UNDERGROUND STRUCTURES NOT SPECIFICALLY COVERED HEREIN. THIS PARAGRAPH SHALL NOT BE CONSTRUED TO APPLY TO WORK BELOW GROUND LEVEL IN OPEN CUT. IT SHALL APPLY TO CUT AND COVER WORK OF SUBWAY CONSTRUCTION AFTER THE TEMPORARY COVER HAS BEEN PLACED. (FRESNO, KINGS, AND MADERA COUNTIES).....$ 35.55 27.30

LABORER, CONSTRUCTION CRAFT LABORERS: GROUP 1-E-WORK ON AND/OR IN BELL HOLE FOOTINGS AND SHAFTS THEREOF, AND WORK ON AND IN DEEP FOOTINGS. (A DEEP FOOTING IS A HOLE 15 FEET OR MORE IN DEPTH.) IN THE EVENT THE DEPTH OF THE FOOTING IS UNKNOWN AT THE COMMENCEMENT OF EXCAVATION, AND THE FINAL DEPTH EXCEEDS 15 FEET, THE DEEP FOOTING WAGE RATE WOULD APPLY TO ALL EMPLOYEES FOR EACH AND EVERY DAY WORKED ON OR IN THE EXCAVATION OF THE FOOTING FROM

THE DATE OF INCEPTION. FOOTNOTES: LABORERS WORKING OFF OR WITH OR FROM BOS'N CHAIRS, SWINGING SCAFFOLDS, BELTS SHALL RECEIVE $0.25 PER HOUR ABOVE THE APPLICABLE WAGE RATE. GROUP 1-B: SEWER CLEANERS SHALL RECEIVE $4.00 PER DAY ABOVE GROUP 1 WAGE RATES. ""SEWER CLEANER"" MEANS ANY WORKER WHO HANDLES OR COMES IN CONTACT WITH RAW SEWAGE IN SMALL DIAMETER SEWERS. THOSE WHO WORK INSIDE RECENTLY ACTIVE, LARGE DIAMETER SEWERS, AND ALL RECENTLY ACTIVE SEWER MANHOLES SHAL RECEIVE $5.00 PER DAY ABOVE GROUP 1 WAGE RATES. GROUP 1-D: MAINTENANCE AND REPAIR TRACK AND ROAD BEDS. ALL EMPLOYEES PERFORMING WORK COVERED HEREIN SHALL RECEIVE $0.25 PER HOUR ABOVE THEIR REGULAR RATE FOR ALL WORK PERFORMED ON UNDERGROUND STRUCTURES NOT SPECIFICALLY COVERED HEREIN. THIS PARAGRAPH SHALL NOT BE CONSTRUED TO APPLY TO WORK BELOW GROUND LEVEL IN OPEN CUT. IT SHALL APPLY TO CUT AND COVER WORK OF SUBWAY CONSTRUCTION AFTER THE TEMPORARY COVER HAS BEEN PLACED. (FRESNO, KINGS, AND MADERA COUNTIES).....$ 36.05 27.30

LABORER, CONSTRUCTION CRAFT LABORERS: GROUP 2-ASPHALT SHOVELER; CEMENT DUMPER AND HANDLING DRY CEMENT OR GYPSUM; CHOKE-SETTER AND RIGGER (CLEARING WORK); CONCRETE BUCKET DUMPER AND CHUTE; CONCRETE CHIPPING AND GRINDING; CONCRETE LABORER (WET OR DRY); DRILLER TENDER, CHUCK TENDER, NIPPER; GUINEA CHASER (STAKE), GROUT CREW; HIGH PRESSURE NOZZLE, ADDUCTOR; HYDRAULIC MONITOR (OVER 100 LBS. PRESSURE); LOADING AND UNLOADING, CARRYING AND HAULING OF ALL RODS AND MATERIALS FOR USE IN REINFORCING CONCRETE CONSTRUCTION; PITTSBURGH CHIPPER AND SIMILAR TYPE BRUSH SHREDDERS; SLOPER; SINGLE FOOT, HAND-HELD, PNEUMATIC TAMPER; ALL PNEUMATIC, AIR, GAS AND ELECTRIC TOOLS NOT LISTED IN GROUPS 1 THROUGH 1-F; JACKING OF PIPE - UNDER 12 INCHES. FOOTNOTES: LABORERS WORKING OFF OR WITH OR FROM BOS'N CHAIRS, SWINGING SCAFFOLDS, BELTS SHALL RECEIVE $0.25 PER HOUR ABOVE THE APPLICABLE WAGE RATE. GROUP 1-B: SEWER CLEANERS SHALL RECEIVE $4.00 PER DAY ABOVE GROUP 1 WAGE RATES. ""SEWER CLEANER"" MEANS ANY WORKER WHO HANDLES OR COMES IN CONTACT WITH RAW SEWAGE IN SMALL DIAMETER SEWERS. THOSE WHO WORK INSIDE RECENTLY ACTIVE, LARGE DIAMETER SEWERS, AND ALL RECENTLY ACTIVE SEWER MANHOLES SHAL RECEIVE $5.00 PER DAY ABOVE GROUP 1 WAGE RATES. GROUP 1-D: MAINTENANCE AND REPAIR TRACK AND ROAD BEDS. ALL EMPLOYEES PERFORMING WORK COVERED HEREIN SHALL RECEIVE $0.25 PER HOUR ABOVE THEIR REGULAR RATE FOR ALL WORK PERFORMED ON UNDERGROUND STRUCTURES NOT SPECIFICALLY COVERED HEREIN. THIS PARAGRAPH SHALL NOT BE CONSTRUED TO APPLY TO WORK BELOW GROUND LEVEL IN OPEN CUT. IT SHALL APPLY TO CUT AND COVER WORK OF SUBWAY CONSTRUCTION AFTER THE TEMPORARY COVER HAS BEEN PLACED. (FRESNO, KINGS, AND MADERA COUNTIES).....$ 35.35 27.30

LABORER, CONSTRUCTION CRAFT LABORERS: GROUP 3-CONSTRUCTION LABORERS, INCLUDING BRIDGE AND GENERAL LABORER; DUMP, LOAD SPOTTER; FLAG PERSON; FIRE WATCHER; FENCE ERECTOR; GUARDRAIL ERECTOR; GARDENER, HORTICULTURAL AND LANDSCAPE LABORER; JETTING; LIMBER, BRUSH LOADER AND PILER; PAVEMENT MARKER (BUTTON SETTER); MAINTENANCE, REPAIR TRACK AND ROAD BEDS; STREETCAR AND RAILROAD CONSTRUCTION TRACK LABORER; TEMPORARY AIR AND WATER LINES,

VICTAULIC OR SIMILAR; TOOL ROOM ATTENDANT (JOBSITE ONLY). FOOTNOTES: LABORERS WORKING OFF OR WITH OR FROM BOS'N CHAIRS, SWINGING SCAFFOLDS, BELTS SHALL RECEIVE $0.25 PER HOUR ABOVE THE APPLICABLE WAGE RATE. GROUP 1-B: SEWER CLEANERS SHALL RECEIVE $4.00 PER DAY ABOVE GROUP 1 WAGE RATES. ""SEWER CLEANER"" MEANS ANY WORKER WHO HANDLES OR COMES IN CONTACT WITH RAW SEWAGE IN SMALL DIAMETER SEWERS. THOSE WHO WORK INSIDE RECENTLY ACTIVE, LARGE DIAMETER SEWERS, AND ALL RECENTLY ACTIVE SEWER MANHOLES SHAL RECEIVE $5.00 PER DAY ABOVE GROUP 1 WAGE RATES. GROUP 1-D: MAINTENANCE AND REPAIR TRACK AND ROAD BEDS. ALL EMPLOYEES PERFORMING WORK COVERED HEREIN SHALL RECEIVE $0.25 PER HOUR ABOVE THEIR REGULAR RATE FOR ALL WORK PERFORMED ON UNDERGROUND STRUCTURES NOT SPECIFICALLY COVERED HEREIN. THIS PARAGRAPH SHALL NOT BE CONSTRUED TO APPLY TO WORK BELOW GROUND LEVEL IN OPEN CUT. IT SHALL APPLY TO CUT AND COVER WORK OF SUBWAY CONSTRUCTION AFTER THE TEMPORARY COVER HAS BEEN PLACED. (FRESNO, KINGS, AND MADERA COUNTIES).....$ 35.25 27.30

LABORER, CONSTRUCTION CRAFT LABORERS: GROUP 4- FINAL CLEAN-UP WORK OF DEBRIS, GROUNDS AND BUILDING INCLUDING BUT NOT LIMITED TO: STREET CLEANER; CLEANING AND WASHING WINDOWS; BRICK CLEANER (JOBSITE ONLY); MATERIAL CLEANER (JOBSITE ONLY). THE CLASSIFICATION ""MATERIAL CLEANER"" IS TO BE UTILIZED UNDER THE FOLLOWING CONDITIONS: A: AT DEMOLITION SITE FOR THE SALVAGE OF THE MATERIAL. B: AT THE CONCLUSION OF A JOB WHERE THE MATERIAL IS TO BE SALVAGED AND STOCKED TO BE REUSED ON ANOTHER JOB. C: FOR THE CLEANING OF SALVAGE MATERIAL AT THE JOBSITE OR TEMPORARY JOBSITE YARD. THE MATERIAL CLEANER CLASSIFICATION SHOULD NOT BE USED IN THE PERFORMANCE OF ""FORM STRIPPING, CLEANING AND OILING AND MOVING TO THE NEXT POINT OF ERECTION"". FOOTNOTES: LABORERS WORKING OFF OR WITH OR FROM BOS'N CHAIRS, SWINGING SCAFFOLDS, BELTS SHALL RECEIVE $0.25 PER HOUR ABOVE THE APPLICABLE WAGE RATE. GROUP 1-B: SEWER CLEANERS SHALL RECEIVE $4.00 PER DAY ABOVE GROUP 1 WAGE RATES. ""SEWER CLEANER"" MEANS ANY WORKER WHO HANDLES OR COMES IN CONTACT WITH RAW SEWAGE IN SMALL DIAMETER SEWERS. THOSE WHO WORK INSIDE RECENTLY ACTIVE, LARGE DIAMETER SEWERS, AND ALL RECENTLY ACTIVE SEWER MANHOLES SHAL RECEIVE $5.00 PER DAY ABOVE GROUP 1 WAGE RATES. GROUP 1-D: MAINTENANCE AND REPAIR TRACK AND ROAD BEDS. ALL EMPLOYEES PERFORMING WORK COVERED HEREIN SHALL RECEIVE $0.25 PER HOUR ABOVE THEIR REGULAR RATE FOR ALL WORK PERFORMED ON UNDERGROUND STRUCTURES NOT SPECIFICALLY COVERED HEREIN. THIS PARAGRAPH SHALL NOT BE CONSTRUED TO APPLY TO WORK BELOW GROUND LEVEL IN OPEN CUT. IT SHALL APPLY TO CUT AND COVER WORK OF SUBWAY CONSTRUCTION AFTER THE TEMPORARY COVER HAS BEEN PLACED. (FRESNO, KINGS, AND MADERA COUNTIES).....$ 28.94 27.30

LABORER, GUNITE: GROUP 1- STRUCTURAL NOZZLEMAN. FOOTNOTES: LABORERS WORKING OFF OR WITH OR FROM BOS'N CHAIRS, SWINGING SCAFFOLDS, BELTS SHALL RECEIVE $0.25 PER HOUR ABOVE THE APPLICABLE WAGE RATE. (FRESNO, KINGS, AND MADERA COUNTIES).....$ 36.46 27.30

LABORER, GUNITE: GROUP 2- NOZZLEMAN, GUNMAN, POTMAN, GROUNDMAN. FOOTNOTES: LABORERS WORKING OFF OR WITH OR FROM BOS'N CHAIRS, SWINGING

SCAFFOLDS, BELTS SHALL RECEIVE $0.25 PER HOUR ABOVE THE APPLICABLE WAGE RATE. (FRESNO, KINGS, AND MADERA COUNTIES).....$ 35.96 27.30
LABORER, GUNITE: GROUP 3- REBOUNDMAN. FOOTNOTES: LABORERS WORKING OFF OR WITH OR FROM BOS'N CHAIRS, SWINGING SCAFFOLDS, BELTS SHALL RECEIVE $0.25 PER HOUR ABOVE THE APPLICABLE WAGE RATE. (FRESNO, KINGS, AND MADERA COUNTIES).....$ 35.37 27.30
LABORER, GUNITE: GROUP 4- GUINTE LABORER. FOOTNOTES: LABORERS WORKING OFF OR WITH OR FROM BOS'N CHAIRS, SWINGING SCAFFOLDS, BELTS SHALL RECEIVE $0.25 PER HOUR ABOVE THE APPLICABLE WAGE RATE. (FRESNO, KINGS, AND MADERA COUNTIES).....$ 35.25 27.30
LABORER, WRECKING: GROUP 1- SKILLED WRECKER (REMOVING AND SALVAGING OF SASH, WINDOWS, AND MATERIALS). FOOTNOTES: LABORERS WORKING OFF OR WITH OR FROM BOS'N CHAIRS, SWINGING SCAFFOLDS, BELTS SHALL RECEIVE $0.25 PER HOUR ABOVE THE APPLICABLE WAGE RATE. (FRESNO, KINGS, AND MADERA COUNTIES).....$ 35.50 27.30
LABORER, WRECKING: GROUP 2- SEMI-SKILLED WRECKER (SALVAGING OF OTHER BUILDING MATERIALS). FOOTNOTES: LABORERS WORKING OFF OR WITH OR FROM BOS'N CHAIRS, SWINGING SCAFFOLDS, BELTS SHALL RECEIVE $0.25 PER HOUR ABOVE THE APPLICABLE WAGE RATE. (FRESNO, KINGS, AND MADERA COUNTIES).....$ 35.35 27.30
LABORER: GARDENERS, HORTICULTURAL & LANDSCAPE LABORERS - (1) New Construction. FOOTNOTES: LABORERS WORKING OFF OR WITH OR FROM BOS'N CHAIRS, SWINGING SCAFFOLDS, BELTS SHALL RECEIVE $0.25 PER HOUR ABOVE THE APPLICABLE WAGE RATE. (FRESNO, KINGS, AND MADERA COUNTIES).....$ 35.25 27.30
LABORER: GARDENERS, HORTICULTURAL & LANDSCAPE LABORERS - (2) Establishment Warranty Period. FOOTNOTES: LABORERS WORKING OFF OR WITH OR FROM BOS'N CHAIRS, SWINGING SCAFFOLDS, BELTS SHALL RECEIVE $0.25 PER HOUR ABOVE THE APPLICABLE WAGE RATE. (FRESNO, KINGS, AND MADERA COUNTIES).....$ 28.94 27.30

LABO0294-010 07/01/2023

	Rates	Fringes
PLASTERER TENDER. WORK ON A SWING STAGE SCAFFOLD: $1.00 PER HOUR ADDITIONAL. (CALAVERAS, FRESNO, KINGS, MADERA, MARIPOSA, MERCED, SAN JOAQUIN, STANISLAUS & TUOLUMNE COUNTIES).....	$ 39.77	28.54

LABO0294-011 07/01/2023

	Rates	Fringes
LABORER, PLASTER TENDER. WORK ON A SWING STAGE SCAFFOLD: $1.00 PER HOUR ADDITIONAL. (FRESNO, KINGS, AND MADERA COUNTIES).....	$ 39.77	28.54

LABO0304-002 07/01/2023

	Rates	Fringes
LABORER, TRAFFIC CONTROL/LANE CLOSURE: ESCORT DRIVER, FLAG PERSON (ALAMEDA COUNTY).....	$ 37.26	27.30
LABORER, TRAFFIC CONTROL/LANE CLOSURE: TRAFFIC CONTROL PERSON I- LAYOUT OF TRAFFIC CONTROL, CRASH CUSHIONS, CONSTRUCTION AREA AND ROADSIDE SIGNAGE. (ALAMEDA COUNTY).....	$ 37.56	27.30
LABORER, TRAFFIC CONTROL/LANE CLOSURE: TRAFFIC CONTROL PERSON II- INSTALLATION AND REMOVAL OF		

TEMPORARY/PERMANENT SIGNS, MARKERS, DELINEATORS AND
CRASH CUSHIONS. (ALAMEDA COUNTY).....$ 35.06 27.30

LABO0304-003 06/26/2023

	Rates	Fringes
TUNNEL AND SHAFT LABORERS: GROUP 1- DIAMOND DRILLER; GROUNDMEN; GUNITE AND SHOTCRETE NOZZLEMEN (ALAMEDA COUNTY)	$ 45.89	27.72
TUNNEL AND SHAFT LABORERS: GROUP 2- RODMEN; SHAFT WORK & RAISE (BELOW ACTUAL OR EXCAVATED GROUND LEVEL) (ALAMEDA COUNTY)	$ 45.66	27.72
TUNNEL AND SHAFT LABORERS: GROUP 3- BIT GRINDER; BLASTER, DRILLER, POWDERMEN, HEADING; CHERRY PICKERMEN - WHERE CAR IS LIFTED; CONCRETE FINISHER IN TUNNEL; CONCRETE SCREEDMAN; GROUT PUMPMAN AND POTMAN; GUNITE & SHOTCRETE GUNMAN & POTMAN; HEADERMEN; HIGH PRESSURE NOZZLEMAN; MINER - TUNNEL, INCLUDING TOP AND BOTTOM MAN ON SHAFT AND RAISE WORK; NIPPER; NOZZLEMAN ON SLICK LINE; SANDBLASTER - POTMAN, ROBOTIC SHOTCRETE PLACER, SEGMENT ERECTOR, TUNNEL MUCK HAULER, STEEL FORM RAISER AND SETTER; TIMBERMAN, RETIMBERMAN (WOOD OR STEEL OR SUBSTITUTE MATERIALS THEREFORE); TUGGER (FOR TUNNEL LABORER WORK); CABLE TENDER; CHUCK TENDER; POWDERMAN - PRIMER HOUSE (ALAMEDA COUNTY)	$ 45.41	27.72
TUNNEL AND SHAFT LABORERS: GROUP 4- VIBRATOR OPERATOR, PAVEMENT BREAKER; BULL GANG - MUCKERS, TRACKMEN; CONCRETE CREW - INCLUDES RODDING AND SPREADING, DUMPMEN (ANY METHOD) (ALAMEDA COUNTY)	$ 44.96	27.72
TUNNEL AND SHAFT LABORERS: GROUP 5- GROUT CREW; REBOUNDMAN; SWAMPER/ BRAKEMAN (ALAMEDA COUNTY)	$ 44.42	27.72
TUNNEL AND SHAFT LABORERS: SHOTCRETE SPECIALIST (ALAMEDA COUNTY)	$ 46.41	27.72

LABO0304-004 06/26/2023

	Rates	Fringes
LABORER (CONSTRUCTION CRAFT LABORERS) GROUP 1-F- WIRE WINDING MACHINE IN CONNECTION WITH GUNITING OR SHOT CRETE. FOOTNOTES: LABORERS WORKING OFF OR WITH OR FROM BOS'N CHAIRS, SWINGING SCAFFOLDS, BELTS SHALL RECEIVE $0.25 PER HOUR ABOVE THE APPLICABLE WAGE RATE. GROUP 1-B: SEWER CLEANERS SHALL RECEIVE $4.00 PER DAY ABOVE GROUP 1 WAGE RATES. ""SEWER CLEANER"" MEANS ANY WORKER WHO HANDLES OR COMES IN CONTACT WITH RAW SEWAGE IN SMALL DIAMETER SEWERS. THOSE WHO WORK INSIDE RECENTLY ACTIVE, LARGE DIAMETER SEWERS, AND ALL RECENTLY ACTIVE SEWER MANHOLES SHAL RECEIVE $5.00 PER DAY ABOVE GROUP 1 WAGE RATES. GROUP 1-D: MAINTENANCE AND REPAIR TRACK AND ROAD BEDS. ALL EMPLOYEES PERFORMING WORK COVERED HEREIN SHALL RECEIVE $0.25 PER HOUR ABOVE THEIR REGULAR RATE FOR ALL WORK PERFORMED ON UNDERGROUND STRUCTURES NOT SPECIFICALLY COVERED HEREIN. THIS PARAGRAPH SHALL NOT BE CONSTRUED TO APPLY TO WORK BELOW GROUND LEVEL IN OPEN CUT. IT SHALL APPLY TO CUT AND COVER WORK OF SUBWAY CONSTRUCTION AFTER THE TEMPORARY COVER HAS BEEN PLACED. (ALAMEDA COUNTY)	$ 37.08	27.30
LABORER, CONSTRUCTION CRAFT LABORERS: CONSTRUCTION SPECIALIST GROUP- ASPHALT IRONER AND RAKER; CHAINSAW; LASER BEAM IN CONNECTION WITH LABORERS' WORK; CAST-IN- PLACE MANHOLE FORM SETTER; PRESSURE PIPELAYER; DAVIS TRENCHER - 300 OR SIMILAR TYPE		

(AND ALL SMALL TRENCHERS); BLASTER; DIAMOND DRILLER; MULTIPLE UNIT DRILL; HYDRAULIC DRILL. FOOTNOTES: LABORERS WORKING OFF OR WITH OR FROM BOS'N CHAIRS, SWINGING SCAFFOLDS, BELTS SHALL RECEIVE $0.25 PER HOUR ABOVE THE APPLICABLE WAGE RATE. GROUP 1-B: SEWER CLEANERS SHALL RECEIVE $4.00 PER DAY ABOVE GROUP 1 WAGE RATES. ""SEWER CLEANER"" MEANS ANY WORKER WHO HANDLES OR COMES IN CONTACT WITH RAW SEWAGE IN SMALL DIAMETER SEWERS. THOSE WHO WORK INSIDE RECENTLY ACTIVE, LARGE DIAMETER SEWERS, AND ALL RECENTLY ACTIVE SEWER MANHOLES SHAL RECEIVE $5.00 PER DAY ABOVE GROUP 1 WAGE RATES. GROUP 1-D: MAINTENANCE AND REPAIR TRACK AND ROAD BEDS. ALL EMPLOYEES PERFORMING WORK COVERED HEREIN SHALL RECEIVE $0.25 PER HOUR ABOVE THEIR REGULAR RATE FOR ALL WORK PERFORMED ON UNDERGROUND STRUCTURES NOT SPECIFICALLY COVERED HEREIN. THIS PARAGRAPH SHALL NOT BE CONSTRUED TO APPLY TO WORK BELOW GROUND LEVEL IN OPEN CUT. IT SHALL APPLY TO CUT AND COVER WORK OF SUBWAY CONSTRUCTION AFTER THE TEMPORARY COVER HAS BEEN PLACED. (ALAMEDA COUNTY).....$ 37.20 27.30

LABORER, CONSTRUCTION CRAFT LABORERS: GROUP 1- ASPHALT SPREADER BOXES (ALL TYPES); BARKO, WACKER AND SIMILAR TYPE TAMPERS; BUGGYMOBILE; CAULKER, BANDER, PIPEWRAPPER, CONDUIT LAYER, PLASTIC PIPELAYER; CERTIFIED HAZARDOUS WASTE WORKER INCLUDING LEADE ABATEMENT; COMPACTORS OF ALL TYPES; CONCRETE AND MAGNESITE MIXER, 1/2 YD. AND UNDER; CONCRETE PAN WORK; CONCRETE SANDER; CONCRETE SAW; CRIBBER AND/OR SHORING; CUT GRANITE CURB SETTER; DRI-PAK-IT MACHINE; FALLER, LOGLOADER AND BUCKER; FORM RAISER, SLIP FORMS; GREEN CUTTER; HEADERBOARD, HUBSETTER, ALIGNER, BY ANY METHOD; HIGH PRESSURE BLOW PIPE (1-1/2"" OR OVER, 100 LBS. PRESSURE/OVER); HYDRO SEEDER AND SIMILAR TYPE; JACKHAMMER OPERATOR; JACKING OF PIPE OVER 12 INCHES; JACKSON AND SIMILAR TYPE COMPACTOR; KETTLE TENDER, POT AND WORKER APPLYING ASPHALT, LAY-KOLD, CREOSOTE, LIME, CAUSTIC AND SIMILAR TYPE MATERIALS (APPLYING MEANS APPLYING, DIPPING OR HANDLING OF SUCH MATERIALS); LAGGING, SHEETING, WHALING, BRACING, TRENCHJACKING, LAGGING HAMMER; MAGNESITE, EPOXYRESIN, FIBERGLASS, MASTIC WORKER (WET OR DRY); NO JOINT PIPE AND STRIPPING OF SAME, INCLUDING REPAIR OF VOIDS; PAVEMENT BREAKER AND SPADER, INCLUDING TOOL GRINDER; PERMA CURB; PIPELAYER (INCLUDING GRADE CHECKING IN CONNECTION WITH PIPELAYING); PRECAST-MANHOLE SETTER; PRESSURE PIPE TESTER; POST HOLE DIGGER, AIR, GAS AND ELECTRIC; POWER BROOM SWEEPER; POWER TAMPERS OF ALL TYPES (EXCEPT AS SHOWN IN GROUP 2); RAM SET GUN AND STUD GUN; RIPRAP STONEPAVER AND ROCK-SLINGER, INCLUDING PLACING OF SACKED CONCRETE AND/OR SAND (WET OR DRY) AND GABIONS AND SIMILAR TYPE; ROTARY SCARIFIER OR MULTIPLE HEAD CONCRETE CHIPPING SCARIFIER; ROTO AND DITCH WITCH; ROTOTILLER; SANDBLASTER, POT, GUN, NOZZLE OPERATORS; SIGNALLING AND RIGGING; TANK CLEANER; TREE CLIMBER; TURBO BLASTER; VIBRASCREED, BULL FLOAT IN CONNECTION WITH LABORERS' WORK; VIBRATOR; HAZARDOUS WASTE WORKER (LEAD REMOVAL); ASBESTOS AND MOLD REMOVAL WORKER. FOOTNOTES: LABORERS WORKING OFF OR WITH OR FROM BOS'N CHAIRS, SWINGING SCAFFOLDS, BELTS SHALL RECEIVE $0.25 PER HOUR ABOVE THE APPLICABLE WAGE RATE. GROUP 1-B:

SEWER CLEANERS SHALL RECEIVE $4.00 PER DAY ABOVE GROUP 1 WAGE RATES. ""SEWER CLEANER"" MEANS ANY WORKER WHO HANDLES OR COMES IN CONTACT WITH RAW SEWAGE IN SMALL DIAMETER SEWERS. THOSE WHO WORK INSIDE RECENTLY ACTIVE, LARGE DIAMETER SEWERS, AND ALL RECENTLY ACTIVE SEWER MANHOLES SHAL RECEIVE $5.00 PER DAY ABOVE GROUP 1 WAGE RATES. GROUP 1-D: MAINTENANCE AND REPAIR TRACK AND ROAD BEDS. ALL EMPLOYEES PERFORMING WORK COVERED HEREIN SHALL RECEIVE $0.25 PER HOUR ABOVE THEIR REGULAR RATE FOR ALL WORK PERFORMED ON UNDERGROUND STRUCTURES NOT SPECIFICALLY COVERED HEREIN. THIS PARAGRAPH SHALL NOT BE CONSTRUED TO APPLY TO WORK BELOW GROUND LEVEL IN OPEN CUT. IT SHALL APPLY TO CUT AND COVER WORK OF SUBWAY CONSTRUCTION AFTER THE TEMPORARY COVER HAS BEEN PLACED. (ALAMEDA COUNTY).....$ 36.50 27.30

LABORER, CONSTRUCTION CRAFT LABORERS: GROUP 1-A-JOY DRILL MODEL TWM-2A; GARDNER-DENVER MODEL DH143 AND SIMILAR TYPE DRILLS; TRACK DRILLER; JACK LEG DRILLER; WAGON DRILLER; MECHANICAL DRILLERS, ALL TYPES REGARDLESS OF TYPE OR METHOD OF POWER; MECHANICAL PIPE LAYERS, ALL TYPES REGARDLESS OF TYPE OR METHOD OF POWER; BLASTER AND POWDER; ALL WORK OF LOADING, PLACING AND BLASTING OF ALL POWDER AND EXPLOSIVES OF WHATEVER TYPE REGARDLESS OF METHOD USED FOR SUCH LOADING AND PLACING; HIGH SCALERS (INCLUDING DRILLING OF SAME); TREE TOPPER; BIT GRINDER. GROUP 1-B: SEWER CLEANERS SHALL RECEIVE $4.00 PER DAY ABOVE GROUP 1 WAGE RATES. ""SEWER CLEANER"" MEANS ANY WORKER WHO HANDLES OR COMES IN CONTACT WITH RAW SEWAGE IN SMALL DIAMETER SEWERS. THOSE WHO WORK INSIDE RECENTLY ACTIVE, LARGE DIAMETER SEWERS, AND ALL RECENTLY ACTIVE SEWER MANHOLES SHAL RECEIVE $5.00 PER DAY ABOVE GROUP 1 WAGE RATES. GROUP 1-D: MAINTENANCE AND REPAIR TRACK AND ROAD BEDS. ALL EMPLOYEES PERFORMING WORK COVERED HEREIN SHALL RECEIVE $0.25 PER HOUR ABOVE THEIR REGULAR RATE FOR ALL WORK PERFORMED ON UNDERGROUND STRUCTURES NOT SPECIFICALLY COVERED HEREIN. THIS PARAGRAPH SHALL NOT BE CONSTRUED TO APPLY TO WORK BELOW GROUND LEVEL IN OPEN CUT. IT SHALL APPLY TO CUT AND COVER WORK OF SUBWAY CONSTRUCTION AFTER THE TEMPORARY COVER HAS BEEN PLACED. (ALAMEDA COUNTY).....$ 36.72 27.30

LABORER, CONSTRUCTION CRAFT LABORERS: GROUP 1-C-BURNING AND WELDING IN CONNECTION WITH LABORERS' WORK; SYNTHETIC THERMOPLASTICS AND SIMILAR TYPE WELDING. FOOTNOTES: LABORERS WORKING OFF OR WITH OR FROM BOS'N CHAIRS, SWINGING SCAFFOLDS, BELTS SHALL RECEIVE $0.25 PER HOUR ABOVE THE APPLICABLE WAGE RATE. GROUP 1-B: SEWER CLEANERS SHALL RECEIVE $4.00 PER DAY ABOVE GROUP 1 WAGE RATES. ""SEWER CLEANER"" MEANS ANY WORKER WHO HANDLES OR COMES IN CONTACT WITH RAW SEWAGE IN SMALL DIAMETER SEWERS. THOSE WHO WORK INSIDE RECENTLY ACTIVE, LARGE DIAMETER SEWERS, AND ALL RECENTLY ACTIVE SEWER MANHOLES SHAL RECEIVE $5.00 PER DAY ABOVE GROUP 1 WAGE RATES. GROUP 1-D: MAINTENANCE AND REPAIR TRACK AND ROAD BEDS. ALL EMPLOYEES PERFORMING WORK COVERED HEREIN SHALL RECEIVE $0.25 PER HOUR ABOVE THEIR REGULAR RATE FOR ALL WORK PERFORMED ON UNDERGROUND STRUCTURES NOT SPECIFICALLY COVERED HEREIN. THIS PARAGRAPH SHALL NOT BE CONSTRUED TO APPLY TO WORK BELOW GROUND LEVEL IN OPEN CUT. IT SHALL APPLY TO CUT AND COVER WORK OF SUBWAY

CONSTRUCTION AFTER THE TEMPORARY COVER HAS BEEN PLACED. (ALAMEDA COUNTY).....$ 36.55 27.30

LABORER, CONSTRUCTION CRAFT LABORERS: GROUP 1-E-WORK ON AND/OR IN BELL HOLE FOOTINGS AND SHAFTS THEREOF, AND WORK ON AND IN DEEP FOOTINGS. (A DEEP FOOTING IS A HOLE 15 FEET OR MORE IN DEPTH.) IN THE EVENT THE DEPTH OF THE FOOTING IS UNKNOWN AT THE COMMENCEMENT OF EXCAVATION, AND THE FINAL DEPTH EXCEEDS 15 FEET, THE DEEP FOOTING WAGE RATE WOULD APPLY TO ALL EMPLOYEES FOR EACH AND EVERY DAY WORKED ON OR IN THE EXCAVATION OF THE FOOTING FROM THE DATE OF INCEPTION. FOOTNOTES: LABORERS WORKING OFF OR WITH OR FROM BOS'N CHAIRS, SWINGING SCAFFOLDS, BELTS SHALL RECEIVE $0.25 PER HOUR ABOVE THE APPLICABLE WAGE RATE. GROUP 1-B: SEWER CLEANERS SHALL RECEIVE $4.00 PER DAY ABOVE GROUP 1 WAGE RATES. ""SEWER CLEANER"" MEANS ANY WORKER WHO HANDLES OR COMES IN CONTACT WITH RAW SEWAGE IN SMALL DIAMETER SEWERS. THOSE WHO WORK INSIDE RECENTLY ACTIVE, LARGE DIAMETER SEWERS, AND ALL RECENTLY ACTIVE SEWER MANHOLES SHAL RECEIVE $5.00 PER DAY ABOVE GROUP 1 WAGE RATES. GROUP 1-D: MAINTENANCE AND REPAIR TRACK AND ROAD BEDS. ALL EMPLOYEES PERFORMING WORK COVERED HEREIN SHALL RECEIVE $0.25 PER HOUR ABOVE THEIR REGULAR RATE FOR ALL WORK PERFORMED ON UNDERGROUND STRUCTURES NOT SPECIFICALLY COVERED HEREIN. THIS PARAGRAPH SHALL NOT BE CONSTRUED TO APPLY TO WORK BELOW GROUND LEVEL IN OPEN CUT. IT SHALL APPLY TO CUT AND COVER WORK OF SUBWAY CONSTRUCTION AFTER THE TEMPORARY COVER HAS BEEN PLACED. (ALAMEDA COUNTY).....$ 37.05 27.30

LABORER, CONSTRUCTION CRAFT LABORERS: GROUP 2-ASPHALT SHOVELER; CEMENT DUMPER AND HANDLING DRY CEMENT OR GYPSUM; CHOKE-SETTER AND RIGGER (CLEARING WORK); CONCRETE BUCKET DUMPER AND CHUTE; CONCRETE CHIPPING AND GRINDING; CONCRETE LABORER (WET OR DRY); DRILLER TENDER, CHUCK TENDER, NIPPER; GUINEA CHASER (STAKE), GROUT CREW; HIGH PRESSURE NOZZLE, ADDUCTOR; HYDRAULIC MONITOR (OVER 100 LBS. PRESSURE); LOADING AND UNLOADING, CARRYING AND HAULING OF ALL RODS AND MATERIALS FOR USE IN REINFORCING CONCRETE CONSTRUCTION; PITTSBURGH CHIPPER AND SIMILAR TYPE BRUSH SHREDDERS; SLOPER; SINGLE FOOT, HAND-HELD, PNEUMATIC TAMPER; ALL PNEUMATIC, AIR, GAS AND ELECTRIC TOOLS NOT LISTED IN GROUPS 1 THROUGH 1-F; JACKING OF PIPE - UNDER 12 INCHES. FOOTNOTES: LABORERS WORKING OFF OR WITH OR FROM BOS'N CHAIRS, SWINGING SCAFFOLDS, BELTS SHALL RECEIVE $0.25 PER HOUR ABOVE THE APPLICABLE WAGE RATE. GROUP 1-B: SEWER CLEANERS SHALL RECEIVE $4.00 PER DAY ABOVE GROUP 1 WAGE RATES. ""SEWER CLEANER"" MEANS ANY WORKER WHO HANDLES OR COMES IN CONTACT WITH RAW SEWAGE IN SMALL DIAMETER SEWERS. THOSE WHO WORK INSIDE RECENTLY ACTIVE, LARGE DIAMETER SEWERS, AND ALL RECENTLY ACTIVE SEWER MANHOLES SHAL RECEIVE $5.00 PER DAY ABOVE GROUP 1 WAGE RATES. GROUP 1-D: MAINTENANCE AND REPAIR TRACK AND ROAD BEDS. ALL EMPLOYEES PERFORMING WORK COVERED HEREIN SHALL RECEIVE $0.25 PER HOUR ABOVE THEIR REGULAR RATE FOR ALL WORK PERFORMED ON UNDERGROUND STRUCTURES NOT SPECIFICALLY COVERED HEREIN. THIS PARAGRAPH SHALL NOT BE CONSTRUED TO APPLY TO WORK BELOW GROUND LEVEL IN OPEN CUT. IT SHALL APPLY TO CUT AND COVER WORK OF SUBWAY CONSTRUCTION AFTER THE TEMPORARY COVER HAS BEEN

PLACED. (ALAMEDA COUNTY).....$ 36.35 27.30
LABORER, CONSTRUCTION CRAFT LABORERS: GROUP 3-
CONSTRUCTION LABORERS, INCLUDING BRIDGE AND GENERAL
LABORER; DUMP, LOAD SPOTTER; FLAG PERSON; FIRE
WATCHER; FENCE ERECTOR; GUARDRAIL ERECTOR;
GARDENER, HORTICULTURAL AND LANDSCAPE LABORER;
JETTING; LIMBER, BRUSH LOADER AND PILER; PAVEMENT
MARKER (BUTTON SETTER); MAINTENANCE, REPAIR TRACK
AND ROAD BEDS; STREETCAR AND RAILROAD CONSTRUCTION
TRACK LABORER; TEMPORARY AIR AND WATER LINES,
VICTAULIC OR SIMILAR; TOOL ROOM ATTENDANT (JOBSITE
ONLY). FOOTNOTES: LABORERS WORKING OFF OR WITH OR
FROM BOS'N CHAIRS, SWINGING SCAFFOLDS, BELTS SHALL
RECEIVE $0.25 PER HOUR ABOVE THE APPLICABLE WAGE
RATE. GROUP 1-B: SEWER CLEANERS SHALL RECEIVE
$4.00 PER DAY ABOVE GROUP 1 WAGE RATES. ""SEWER
CLEANER"" MEANS ANY WORKER WHO HANDLES OR COMES IN
CONTACT WITH RAW SEWAGE IN SMALL DIAMETER SEWERS.
THOSE WHO WORK INSIDE RECENTLY ACTIVE, LARGE
DIAMETER SEWERS, AND ALL RECENTLY ACTIVE SEWER
MANHOLES SHAL RECEIVE $5.00 PER DAY ABOVE GROUP 1
WAGE RATES. GROUP 1-D: MAINTENANCE AND REPAIR
TRACK AND ROAD BEDS. ALL EMPLOYEES PERFORMING WORK
COVERED HEREIN SHALL RECEIVE $0.25 PER HOUR ABOVE
THEIR REGULAR RATE FOR ALL WORK PERFORMED ON
UNDERGROUND STRUCTURES NOT SPECIFICALLY COVERED
HEREIN. THIS PARAGRAPH SHALL NOT BE CONSTRUED TO
APPLY TO WORK BELOW GROUND LEVEL IN OPEN CUT. IT
SHALL APPLY TO CUT AND COVER WORK OF SUBWAY
CONSTRUCTION AFTER THE TEMPORARY COVER HAS BEEN
PLACED. (ALAMEDA COUNTY).....$ 36.25 27.30
LABORER, CONSTRUCTION CRAFT LABORERS: GROUP 4-
FINAL CLEAN-UP WORK OF DEBRIS, GROUNDS AND BUILDING
INCLUDING BUT NOT LIMITED TO: STREET CLEANER;
CLEANING AND WASHING WINDOWS; BRICK CLEANER
(JOBSITE ONLY); MATERIAL CLEANER (JOBSITE ONLY).
THE CLASSIFICATION ""MATERIAL CLEANER"" IS TO BE
UTILIZED UNDER THE FOLLOWING CONDITIONS: A: AT
DEMOLITION SITE FOR THE SALVAGE OF THE MATERIAL.
B: AT THE CONCLUSION OF A JOB WHERE THE MATERIAL IS
TO BE SALVAGED AND STOCKED TO BE REUSED ON ANOTHER
JOB. C: FOR THE CLEANING OF SALVAGE MATERIAL AT
THE JOBSITE OR TEMPORARY JOBSITE YARD. THE
MATERIAL CLEANER CLASSIFICATION SHOULD NOT BE USED
IN THE PERFORMANCE OF ""FORM STRIPPING, CLEANING
AND OILING AND MOVING TO THE NEXT POINT OF
ERECTION"". FOOTNOTES: LABORERS WORKING OFF OR
WITH OR FROM BOS'N CHAIRS, SWINGING SCAFFOLDS,
BELTS SHALL RECEIVE $0.25 PER HOUR ABOVE THE
APPLICABLE WAGE RATE. GROUP 1-B: SEWER CLEANERS
SHALL RECEIVE $4.00 PER DAY ABOVE GROUP 1 WAGE
RATES. ""SEWER CLEANER"" MEANS ANY WORKER WHO
HANDLES OR COMES IN CONTACT WITH RAW SEWAGE IN
SMALL DIAMETER SEWERS. THOSE WHO WORK INSIDE
RECENTLY ACTIVE, LARGE DIAMETER SEWERS, AND ALL
RECENTLY ACTIVE SEWER MANHOLES SHAL RECEIVE $5.00
PER DAY ABOVE GROUP 1 WAGE RATES. GROUP 1-D:
MAINTENANCE AND REPAIR TRACK AND ROAD BEDS. ALL
EMPLOYEES PERFORMING WORK COVERED HEREIN SHALL
RECEIVE $0.25 PER HOUR ABOVE THEIR REGULAR RATE FOR
ALL WORK PERFORMED ON UNDERGROUND STRUCTURES NOT
SPECIFICALLY COVERED HEREIN. THIS PARAGRAPH SHALL
NOT BE CONSTRUED TO APPLY TO WORK BELOW GROUND
LEVEL IN OPEN CUT. IT SHALL APPLY TO CUT AND COVER
WORK OF SUBWAY CONSTRUCTION AFTER THE TEMPORARY

COVER HAS BEEN PLACED. (ALAMEDA COUNTY).....$ 29.94 27.30
LABORER, GUNITE: GROUP 1- STRUCTURAL NOZZLEMAN.
FOOTNOTES: LABORERS WORKING OFF OR WITH OR FROM
BOS'N CHAIRS, SWINGING SCAFFOLDS, BELTS SHALL
RECEIVE $0.25 PER HOUR ABOVE THE APPLICABLE WAGE
RATE.   (ALAMEDA COUNTY).....$ 37.46 27.30
LABORER, GUNITE: GROUP 2- NOZZLEMAN, GUNMAN,
POTMAN, GROUNDMAN. FOOTNOTES: LABORERS WORKING
OFF OR WITH OR FROM BOS'N CHAIRS, SWINGING
SCAFFOLDS, BELTS SHALL RECEIVE $0.25 PER HOUR ABOVE
THE APPLICABLE WAGE RATE. (ALAMEDA COUNTY).....$ 36.96 27.30
LABORER, GUNITE: GROUP 3- REBOUNDMAN. FOOTNOTES:
LABORERS WORKING OFF OR WITH OR FROM BOS'N CHAIRS,
SWINGING SCAFFOLDS, BELTS SHALL RECEIVE $0.25 PER
HOUR ABOVE THE APPLICABLE WAGE RATE.   (ALAMEDA
COUNTY).....$ 36.37 27.30
LABORER, GUNITE: GROUP 4- GUINTE LABORER.
FOOTNOTES: LABORERS WORKING OFF OR WITH OR FROM
BOS'N CHAIRS, SWINGING SCAFFOLDS, BELTS SHALL
RECEIVE $0.25 PER HOUR ABOVE THE APPLICABLE WAGE
RATE.   (ALAMEDA COUNTY).....$ 36.25 27.30
LABORER, WRECKING: GROUP 1- SKILLED WRECKER
(REMOVING AND SALVAGING OF SASH, WINDOWS, AND
MATERIALS). FOOTNOTES: LABORERS WORKING OFF OR
WITH OR FROM BOS'N CHAIRS, SWINGING SCAFFOLDS,
BELTS SHALL RECEIVE $0.25 PER HOUR ABOVE THE
APPLICABLE WAGE RATE. (ALAMEDA COUNTY).....$ 36.50 27.30
LABORER, WRECKING: GROUP 2- SEMI-SKILLED WRECKER
(SALVAGING OF OTHER BUILDING MATERIALS).
FOOTNOTES: LABORERS WORKING OFF OR WITH OR FROM
BOS'N CHAIRS, SWINGING SCAFFOLDS, BELTS SHALL
RECEIVE $0.25 PER HOUR ABOVE THE APPLICABLE WAGE
RATE. (ALAMEDA COUNTY).....$ 36.35 27.30
LABORER: GARDENERS, HORTICULTURAL & LANDSCAPE
LABORERS - (1) New Construction. FOOTNOTES:
LABORERS WORKING OFF OR WITH OR FROM BOS'N CHAIRS,
SWINGING SCAFFOLDS, BELTS SHALL RECEIVE $0.25 PER
HOUR ABOVE THE APPLICABLE WAGE RATE. (ALAMEDA
COUNTY).....$ 36.25 27.30
LABORER: GARDENERS, HORTICULTURAL & LANDSCAPE
LABORERS - (2) Establishment Warranty Period.
FOOTNOTES: LABORERS WORKING OFF OR WITH OR FROM
BOS'N CHAIRS, SWINGING SCAFFOLDS, BELTS SHALL
RECEIVE $0.25 PER HOUR ABOVE THE APPLICABLE WAGE
RATE. (ALAMEDA COUNTY).....$ 29.94 27.30

LABO0304-005 07/01/2023

Rates Fringes
BRICK TENDER. FOOTNOTES: WORK ON JOBS WHERE
HEAT-PROTECTIVE CLOTHING IS REQUIRED: $2.00 PER
HOUR ADDITIONAL. WORK AT GRINDERS: $.25 PER HOUR
ADDITIONAL. MANHOLE WORK: $2.00 PER DAY ADDITIONAL.
(ALAMEDA COUNTY) .....$ 37.05 27.45

LABO0304-008 07/01/2023

Rates Fringes
PLASTERER TENDER. WORK ON A SWING STAGE SCAFFOLD:
$1.00 PER HOUR ADDITIONAL. (ALAMEDA AND CONTRA
COSTA COUNTIES)   .....$ 41.93 30.32

LABO0324-002 07/01/2023

Rates Fringes

LABORER, TRAFFIC CONTROL/LANE CLOSURE: ESCORT DRIVER, FLAG PERSON. (CONTRA COSTA COUNTY).....$ 37.26 27.30
LABORER, TRAFFIC CONTROL/LANE CLOSURE: TRAFFIC CONTROL PERSON I- LAYOUT OF TRAFFIC CONTROL, CRASH CUSHIONS, CONSTRUCTION AREA AND ROADSIDE SIGNAGE. (CONTRA COSTA COUNTY).....$ 37.56 27.30
LABORER, TRAFFIC CONTROL/LANE CLOSURE: TRAFFIC CONTROL PERSON II- INSTALLATION AND REMOVAL OF TEMPORARY/PERMANENT SIGNS, MARKERS, DELINEATORS AND CRASH CUSHIONS. (CONTRA COSTA COUNTY).....$ 35.06 27.30

LABO0324-006 06/26/2023

	Rates	Fringes
TUNNEL AND SHAFT LABORERS: GROUP 1- DIAMOND DRILLER; GROUNDMEN; GUNITE AND SHOTCRETE NOZZLEMEN (CONTRA COSTA COUNTY)	$ 45.89	27.72
TUNNEL AND SHAFT LABORERS: GROUP 2- RODMEN; SHAFT WORK & RAISE (BELOW ACTUAL OR EXCAVATED GROUND LEVEL) (CONTRA COSTA COUNTY)	$ 45.66	27.72
TUNNEL AND SHAFT LABORERS: GROUP 3- BIT GRINDER; BLASTER, DRILLER, POWDERMEN, HEADING; CHERRY PICKERMEN - WHERE CAR IS LIFTED; CONCRETE FINISHER IN TUNNEL; CONCRETE SCREEDMAN; GROUT PUMPMAN AND POTMAN; GUNITE & SHOTCRETE GUNMAN & POTMAN; HEADERMEN; HIGH PRESSURE NOZZLEMAN; MINER - TUNNEL, INCLUDING TOP AND BOTTOM MAN ON SHAFT AND RAISE WORK; NIPPER; NOZZLEMAN ON SLICK LINE; SANDBLASTER - POTMAN, ROBOTIC SHOTCRETE PLACER, SEGMENT ERECTOR, TUNNEL MUCK HAULER, STEEL FORM RAISER AND SETTER; TIMBERMAN, RETIMBERMAN (WOOD OR STEEL OR SUBSTITUTE MATERIALS THEREFORE); TUGGER (FOR TUNNEL LABORER WORK); CABLE TENDER; CHUCK TENDER; POWDERMAN - PRIMER HOUSE (CONTRA COSTA COUNTY)	$ 45.41	27.72
TUNNEL AND SHAFT LABORERS: GROUP 4- VIBRATOR OPERATOR, PAVEMENT BREAKER; BULL GANG - MUCKERS, TRACKMEN; CONCRETE CREW - INCLUDES RODDING AND SPREADING, DUMPMEN (ANY METHOD) (CONTRA COSTA COUNTY)	$ 44.96	27.72
TUNNEL AND SHAFT LABORERS: GROUP 5- GROUT CREW; REBOUNDMAN; SWAMPER/ BRAKEMAN (CONTRA COSTA COUNTY).	$ 44.42	27.72
TUNNEL AND SHAFT LABORERS: SHOTCRETE SPECIALIST (CONTRA COSTA COUNTY)	$ 46.41	27.72

LABO0324-012 06/26/2023

	Rates	Fringes
LABORER (CONSTRUCTION CRAFT LABORERS) GROUP 1-F- WIRE WINDING MACHINE IN CONNECTION WITH GUNITING OR SHOT CRETE. FOOTNOTES: LABORERS WORKING OFF OR WITH OR FROM BOS'N CHAIRS, SWINGING SCAFFOLDS, BELTS SHALL RECEIVE $0.25 PER HOUR ABOVE THE APPLICABLE WAGE RATE. GROUP 1-B: SEWER CLEANERS SHALL RECEIVE $4.00 PER DAY ABOVE GROUP 1 WAGE RATES. ""SEWER CLEANER"" MEANS ANY WORKER WHO HANDLES OR COMES IN CONTACT WITH RAW SEWAGE IN SMALL DIAMETER SEWERS. THOSE WHO WORK INSIDE RECENTLY ACTIVE, LARGE DIAMETER SEWERS, AND ALL RECENTLY ACTIVE SEWER MANHOLES SHAL RECEIVE $5.00 PER DAY ABOVE GROUP 1 WAGE RATES. GROUP 1-D: MAINTENANCE AND REPAIR TRACK AND ROAD BEDS. ALL EMPLOYEES PERFORMING WORK COVERED HEREIN SHALL RECEIVE $0.25 PER HOUR ABOVE THEIR REGULAR RATE FOR ALL WORK PERFORMED ON UNDERGROUND STRUCTURES NOT SPECIFICALLY COVERED HEREIN. THIS PARAGRAPH SHALL NOT BE CONSTRUED TO		

APPLY TO WORK BELOW GROUND LEVEL IN OPEN CUT. IT SHALL APPLY TO CUT AND COVER WORK OF SUBWAY CONSTRUCTION AFTER THE TEMPORARY COVER HAS BEEN PLACED. (CONTRA COSTA COUNTY)(CONTRA COSTA COUNTY).....$ 37.08 27.30

LABORER, CONSTRUCTION CRAFT LABORERS: CONSTRUCTION SPECIALIST GROUP- ASPHALT IRONER AND RAKER; CHAINSAW; LASER BEAM IN CONNECTION WITH LABORERS' WORK; CAST-IN- PLACE MANHOLE FORM SETTER; PRESSURE PIPELAYER; DAVIS TRENCHER - 300 OR SIMILAR TYPE (AND ALL SMALL TRENCHERS); BLASTER; DIAMOND DRILLER; MULTIPLE UNIT DRILL; HYDRAULIC DRILL. FOOTNOTES: LABORERS WORKING OFF OR WITH OR FROM BOS'N CHAIRS, SWINGING SCAFFOLDS, BELTS SHALL RECEIVE $0.25 PER HOUR ABOVE THE APPLICABLE WAGE RATE. GROUP 1-B: SEWER CLEANERS SHALL RECEIVE $4.00 PER DAY ABOVE GROUP 1 WAGE RATES. ""SEWER CLEANER"" MEANS ANY WORKER WHO HANDLES OR COMES IN CONTACT WITH RAW SEWAGE IN SMALL DIAMETER SEWERS. THOSE WHO WORK INSIDE RECENTLY ACTIVE, LARGE DIAMETER SEWERS, AND ALL RECENTLY ACTIVE SEWER MANHOLES SHAL RECEIVE $5.00 PER DAY ABOVE GROUP 1 WAGE RATES. GROUP 1-D: MAINTENANCE AND REPAIR TRACK AND ROAD BEDS. ALL EMPLOYEES PERFORMING WORK COVERED HEREIN SHALL RECEIVE $0.25 PER HOUR ABOVE THEIR REGULAR RATE FOR ALL WORK PERFORMED ON UNDERGROUND STRUCTURES NOT SPECIFICALLY COVERED HEREIN. THIS PARAGRAPH SHALL NOT BE CONSTRUED TO APPLY TO WORK BELOW GROUND LEVEL IN OPEN CUT. IT SHALL APPLY TO CUT AND COVER WORK OF SUBWAY CONSTRUCTION AFTER THE TEMPORARY COVER HAS BEEN PLACED. (CONTRA COSTA COUNTY).....$ 37.20 27.30

LABORER, CONSTRUCTION CRAFT LABORERS: GROUP 1- ASPHALT SPREADER BOXES (ALL TYPES); BARKO, WACKER AND SIMILAR TYPE TAMPERS; BUGGYMOBILE; CAULKER, BANDER, PIPEWRAPPER, CONDUIT LAYER, PLASTIC PIPELAYER; CERTIFIED HAZARDOUS WASTE WORKER INCLUDING LEADE ABATEMENT; COMPACTORS OF ALL TYPES; CONCRETE AND MAGNESITE MIXER, 1/2 YD. AND UNDER; CONCRETE PAN WORK; CONCRETE SANDER; CONCRETE SAW; CRIBBER AND/OR SHORING; CUT GRANITE CURB SETTER; DRI-PAK-IT MACHINE; FALLER, LOGLOADER AND BUCKER; FORM RAISER, SLIP FORMS; GREEN CUTTER; HEADERBOARD, HUBSETTER, ALIGNER, BY ANY METHOD; HIGH PRESSURE BLOW PIPE (1-1/2"" OR OVER, 100 LBS. PRESSURE/OVER); HYDRO SEEDER AND SIMILAR TYPE; JACKHAMMER OPERATOR; JACKING OF PIPE OVER 12 INCHES; JACKSON AND SIMILAR TYPE COMPACTOR; KETTLE TENDER, POT AND WORKER APPLYING ASPHALT, LAY-KOLD, CREOSOTE, LIME, CAUSTIC AND SIMILAR TYPE MATERIALS (APPLYING MEANS APPLYING, DIPPING OR HANDLING OF SUCH MATERIALS); LAGGING, SHEETING, WHALING, BRACING, TRENCHJACKING, LAGGING HAMMER; MAGNESITE, EPOXYRESIN, FIBERGLASS, MASTIC WORKER (WET OR DRY); NO JOINT PIPE AND STRIPPING OF SAME, INCLUDING REPAIR OF VOIDS; PAVEMENT BREAKER AND SPADER, INCLUDING TOOL GRINDER; PERMA CURB; PIPELAYER (INCLUDING GRADE CHECKING IN CONNECTION WITH PIPELAYING); PRECAST-MANHOLE SETTER; PRESSURE PIPE TESTER; POST HOLE DIGGER, AIR, GAS AND ELECTRIC; POWER BROOM SWEEPER; POWER TAMPERS OF ALL TYPES (EXCEPT AS SHOWN IN GROUP 2); RAM SET GUN AND STUD GUN; RIPRAP STONEPAVER AND ROCK-SLINGER, INCLUDING PLACING OF SACKED CONCRETE AND/OR SAND (WET OR DRY) AND GABIONS AND SIMILAR TYPE; ROTARY SCARIFIER OR

MULTIPLE HEAD CONCRETE CHIPPING SCARIFIER; ROTO AND DITCH WITCH; ROTOTILLER; SANDBLASTER, POT, GUN, NOZZLE OPERATORS; SIGNALLING AND RIGGING; TANK CLEANER; TREE CLIMBER; TURBO BLASTER; VIBRASCREED, BULL FLOAT IN CONNECTION WITH LABORERS' WORK; VIBRATOR; HAZARDOUS WASTE WORKER (LEAD REMOVAL); ASBESTOS AND MOLD REMOVAL WORKER. FOOTNOTES: LABORERS WORKING OFF OR WITH OR FROM BOS'N CHAIRS, SWINGING SCAFFOLDS, BELTS SHALL RECEIVE $0.25 PER HOUR ABOVE THE APPLICABLE WAGE RATE. GROUP 1-B: SEWER CLEANERS SHALL RECEIVE $4.00 PER DAY ABOVE GROUP 1 WAGE RATES. ""SEWER CLEANER"" MEANS ANY WORKER WHO HANDLES OR COMES IN CONTACT WITH RAW SEWAGE IN SMALL DIAMETER SEWERS. THOSE WHO WORK INSIDE RECENTLY ACTIVE, LARGE DIAMETER SEWERS, AND ALL RECENTLY ACTIVE SEWER MANHOLES SHAL RECEIVE $5.00 PER DAY ABOVE GROUP 1 WAGE RATES. GROUP 1-D: MAINTENANCE AND REPAIR TRACK AND ROAD BEDS. ALL EMPLOYEES PERFORMING WORK COVERED HEREIN SHALL RECEIVE $0.25 PER HOUR ABOVE THEIR REGULAR RATE FOR ALL WORK PERFORMED ON UNDERGROUND STRUCTURES NOT SPECIFICALLY COVERED HEREIN. THIS PARAGRAPH SHALL NOT BE CONSTRUED TO APPLY TO WORK BELOW GROUND LEVEL IN OPEN CUT. IT SHALL APPLY TO CUT AND COVER WORK OF SUBWAY CONSTRUCTION AFTER THE TEMPORARY COVER HAS BEEN PLACED. (CONTRA COSTA COUNTY).....$ 36.50 27.30

LABORER, CONSTRUCTION CRAFT LABORERS: GROUP 1-A-JOY DRILL MODEL TWM-2A; GARDNER-DENVER MODEL DH143 AND SIMILAR TYPE DRILLS; TRACK DRILLER; JACK LEG DRILLER; WAGON DRILLER; MECHANICAL DRILLERS, ALL TYPES REGARDLESS OF TYPE OR METHOD OF POWER; MECHANICAL PIPE LAYERS, ALL TYPES REGARDLESS OF TYPE OR METHOD OF POWER; BLASTER AND POWDER; ALL WORK OF LOADING, PLACING AND BLASTING OF ALL POWDER AND EXPLOSIVES OF WHATEVER TYPE REGARDLESS OF METHOD USED FOR SUCH LOADING AND PLACING; HIGH SCALERS (INCLUDING DRILLING OF SAME); TREE TOPPER; BIT GRINDER. GROUP 1-B: SEWER CLEANERS SHALL RECEIVE $4.00 PER DAY ABOVE GROUP 1 WAGE RATES. ""SEWER CLEANER"" MEANS ANY WORKER WHO HANDLES OR COMES IN CONTACT WITH RAW SEWAGE IN SMALL DIAMETER SEWERS. THOSE WHO WORK INSIDE RECENTLY ACTIVE, LARGE DIAMETER SEWERS, AND ALL RECENTLY ACTIVE SEWER MANHOLES SHAL RECEIVE $5.00 PER DAY ABOVE GROUP 1 WAGE RATES. GROUP 1-D: MAINTENANCE AND REPAIR TRACK AND ROAD BEDS. ALL EMPLOYEES PERFORMING WORK COVERED HEREIN SHALL RECEIVE $0.25 PER HOUR ABOVE THEIR REGULAR RATE FOR ALL WORK PERFORMED ON UNDERGROUND STRUCTURES NOT SPECIFICALLY COVERED HEREIN. THIS PARAGRAPH SHALL NOT BE CONSTRUED TO APPLY TO WORK BELOW GROUND LEVEL IN OPEN CUT. IT SHALL APPLY TO CUT AND COVER WORK OF SUBWAY CONSTRUCTION AFTER THE TEMPORARY COVER HAS BEEN PLACED. (CONTRA COSTA COUNTY).....$ 36.72 27.30

LABORER, CONSTRUCTION CRAFT LABORERS: GROUP 1-C-BURNING AND WELDING IN CONNECTION WITH LABORERS' WORK; SYNTHETIC THERMOPLASTICS AND SIMILAR TYPE WELDING. FOOTNOTES: LABORERS WORKING OFF OR WITH OR FROM BOS'N CHAIRS, SWINGING SCAFFOLDS, BELTS SHALL RECEIVE $0.25 PER HOUR ABOVE THE APPLICABLE WAGE RATE. GROUP 1-B: SEWER CLEANERS SHALL RECEIVE $4.00 PER DAY ABOVE GROUP 1 WAGE RATES. ""SEWER CLEANER"" MEANS ANY WORKER WHO HANDLES OR COMES IN CONTACT WITH RAW SEWAGE IN SMALL DIAMETER SEWERS. THOSE WHO WORK INSIDE RECENTLY ACTIVE, LARGE

DIAMETER SEWERS, AND ALL RECENTLY ACTIVE SEWER MANHOLES SHAL RECEIVE $5.00 PER DAY ABOVE GROUP 1 WAGE RATES. GROUP 1-D: MAINTENANCE AND REPAIR TRACK AND ROAD BEDS. ALL EMPLOYEES PERFORMING WORK COVERED HEREIN SHALL RECEIVE $0.25 PER HOUR ABOVE THEIR REGULAR RATE FOR ALL WORK PERFORMED ON UNDERGROUND STRUCTURES NOT SPECIFICALLY COVERED HEREIN. THIS PARAGRAPH SHALL NOT BE CONSTRUED TO APPLY TO WORK BELOW GROUND LEVEL IN OPEN CUT. IT SHALL APPLY TO CUT AND COVER WORK OF SUBWAY CONSTRUCTION AFTER THE TEMPORARY COVER HAS BEEN PLACED. (CONTRA COSTA COUNTY).....$ 36.55 27.30

LABORER, CONSTRUCTION CRAFT LABORERS: GROUP 1-E-WORK ON AND/OR IN BELL HOLE FOOTINGS AND SHAFTS THEREOF, AND WORK ON AND IN DEEP FOOTINGS. (A DEEP FOOTING IS A HOLE 15 FEET OR MORE IN DEPTH.) IN THE EVENT THE DEPTH OF THE FOOTING IS UNKNOWN AT THE COMMENCEMENT OF EXCAVATION, AND THE FINAL DEPTH EXCEEDS 15 FEET, THE DEEP FOOTING WAGE RATE WOULD APPLY TO ALL EMPLOYEES FOR EACH AND EVERY DAY WORKED ON OR IN THE EXCAVATION OF THE FOOTING FROM THE DATE OF INCEPTION. FOOTNOTES: LABORERS WORKING OFF OR WITH OR FROM BOS'N CHAIRS, SWINGING SCAFFOLDS, BELTS SHALL RECEIVE $0.25 PER HOUR ABOVE THE APPLICABLE WAGE RATE. GROUP 1-B: SEWER CLEANERS SHALL RECEIVE $4.00 PER DAY ABOVE GROUP 1 WAGE RATES. ""SEWER CLEANER"" MEANS ANY WORKER WHO HANDLES OR COMES IN CONTACT WITH RAW SEWAGE IN SMALL DIAMETER SEWERS. THOSE WHO WORK INSIDE RECENTLY ACTIVE, LARGE DIAMETER SEWERS, AND ALL RECENTLY ACTIVE SEWER MANHOLES SHAL RECEIVE $5.00 PER DAY ABOVE GROUP 1 WAGE RATES. GROUP 1-D: MAINTENANCE AND REPAIR TRACK AND ROAD BEDS. ALL EMPLOYEES PERFORMING WORK COVERED HEREIN SHALL RECEIVE $0.25 PER HOUR ABOVE THEIR REGULAR RATE FOR ALL WORK PERFORMED ON UNDERGROUND STRUCTURES NOT SPECIFICALLY COVERED HEREIN. THIS PARAGRAPH SHALL NOT BE CONSTRUED TO APPLY TO WORK BELOW GROUND LEVEL IN OPEN CUT. IT SHALL APPLY TO CUT AND COVER WORK OF SUBWAY CONSTRUCTION AFTER THE TEMPORARY COVER HAS BEEN PLACED. (CONTRA COSTA COUNTY)......$ 37.05 27.30

LABORER, CONSTRUCTION CRAFT LABORERS: GROUP 1-G-PIPELAYER (INCLUDING GRADE CHECKING IN CONNECTION WITH PIPELAYING); CAULKER; BANDER; PIPEWRAPPER; CONDUIT LAYER; PLASTIC PIPE LAYER; PRESSURE PIPE TESTER; NO JOINT PIPE AND STRIPPING OF SAME, INCLUDING REPAIR OF VOIDS; PRECAST MANHOLE SETTERS, CAST IN PLACE MANHOLE FORM SETTERS. FOOTNOTES: LABORERS WORKING OFF OR WITH OR FROM BOS'N CHAIRS, SWINGING SCAFFOLDS, BELTS SHALL RECEIVE $0.25 PER HOUR ABOVE THE APPLICABLE WAGE RATE. GROUP 1-B: SEWER CLEANERS SHALL RECEIVE $4.00 PER DAY ABOVE GROUP 1 WAGE RATES. ""SEWER CLEANER"" MEANS ANY WORKER WHO HANDLES OR COMES IN CONTACT WITH RAW SEWAGE IN SMALL DIAMETER SEWERS. THOSE WHO WORK INSIDE RECENTLY ACTIVE, LARGE DIAMETER SEWERS, AND ALL RECENTLY ACTIVE SEWER MANHOLES SHAL RECEIVE $5.00 PER DAY ABOVE GROUP 1 WAGE RATES. GROUP 1-D: MAINTENANCE AND REPAIR TRACK AND ROAD BEDS. ALL EMPLOYEES PERFORMING WORK COVERED HEREIN SHALL RECEIVE $0.25 PER HOUR ABOVE THEIR REGULAR RATE FOR ALL WORK PERFORMED ON UNDERGROUND STRUCTURES NOT SPECIFICALLY COVERED HEREIN. THIS PARAGRAPH SHALL NOT BE CONSTRUED TO APPLY TO WORK BELOW GROUND LEVEL IN OPEN CUT. IT SHALL APPLY TO CUT AND COVER

WORK OF SUBWAY CONSTRUCTION AFTER THE TEMPORARY COVER HAS BEEN PLACED. (CONTRA COSTA COUNTY) ....$ 36.70 27.30

LABORER, CONSTRUCTION CRAFT LABORERS: GROUP 2- ASPHALT SHOVELER; CEMENT DUMPER AND HANDLING DRY CEMENT OR GYPSUM; CHOKE-SETTER AND RIGGER (CLEARING WORK); CONCRETE BUCKET DUMPER AND CHUTE; CONCRETE CHIPPING AND GRINDING; CONCRETE LABORER (WET OR DRY); DRILLER TENDER, CHUCK TENDER, NIPPER; GUINEA CHASER (STAKE), GROUT CREW; HIGH PRESSURE NOZZLE, ADDUCTOR; HYDRAULIC MONITOR (OVER 100 LBS. PRESSURE); LOADING AND UNLOADING, CARRYING AND HAULING OF ALL RODS AND MATERIALS FOR USE IN REINFORCING CONCRETE CONSTRUCTION; PITTSBURGH CHIPPER AND SIMILAR TYPE BRUSH SHREDDERS; SLOPER; SINGLE FOOT, HAND-HELD, PNEUMATIC TAMPER; ALL PNEUMATIC, AIR, GAS AND ELECTRIC TOOLS NOT LISTED IN GROUPS 1 THROUGH 1-F; JACKING OF PIPE - UNDER 12 INCHES. FOOTNOTES: LABORERS WORKING OFF OR WITH OR FROM BOS'N CHAIRS, SWINGING SCAFFOLDS, BELTS SHALL RECEIVE $0.25 PER HOUR ABOVE THE APPLICABLE WAGE RATE. GROUP 1-B: SEWER CLEANERS SHALL RECEIVE $4.00 PER DAY ABOVE GROUP 1 WAGE RATES. ""SEWER CLEANER"" MEANS ANY WORKER WHO HANDLES OR COMES IN CONTACT WITH RAW SEWAGE IN SMALL DIAMETER SEWERS. THOSE WHO WORK INSIDE RECENTLY ACTIVE, LARGE DIAMETER SEWERS, AND ALL RECENTLY ACTIVE SEWER MANHOLES SHAL RECEIVE $5.00 PER DAY ABOVE GROUP 1 WAGE RATES. GROUP 1-D: MAINTENANCE AND REPAIR TRACK AND ROAD BEDS. ALL EMPLOYEES PERFORMING WORK COVERED HEREIN SHALL RECEIVE $0.25 PER HOUR ABOVE THEIR REGULAR RATE FOR ALL WORK PERFORMED ON UNDERGROUND STRUCTURES NOT SPECIFICALLY COVERED HEREIN. THIS PARAGRAPH SHALL NOT BE CONSTRUED TO APPLY TO WORK BELOW GROUND LEVEL IN OPEN CUT. IT SHALL APPLY TO CUT AND COVER WORK OF SUBWAY CONSTRUCTION AFTER THE TEMPORARY COVER HAS BEEN PLACED. (CONTRA COSTA COUNTY).....$ 36.35 27.30

LABORER, CONSTRUCTION CRAFT LABORERS: GROUP 3- CONSTRUCTION LABORERS, INCLUDING BRIDGE AND GENERAL LABORER; DUMP, LOAD SPOTTER; FLAG PERSON; FIRE WATCHER; FENCE ERECTOR; GUARDRAIL ERECTOR; GARDENER, HORTICULTURAL AND LANDSCAPE LABORER; JETTING; LIMBER, BRUSH LOADER AND PILER; PAVEMENT MARKER (BUTTON SETTER); MAINTENANCE, REPAIR TRACK AND ROAD BEDS; STREETCAR AND RAILROAD CONSTRUCTION TRACK LABORER; TEMPORARY AIR AND WATER LINES, VICTAULIC OR SIMILAR; TOOL ROOM ATTENDANT (JOBSITE ONLY). FOOTNOTES: LABORERS WORKING OFF OR WITH OR FROM BOS'N CHAIRS, SWINGING SCAFFOLDS, BELTS SHALL RECEIVE $0.25 PER HOUR ABOVE THE APPLICABLE WAGE RATE. GROUP 1-B: SEWER CLEANERS SHALL RECEIVE $4.00 PER DAY ABOVE GROUP 1 WAGE RATES. ""SEWER CLEANER"" MEANS ANY WORKER WHO HANDLES OR COMES IN CONTACT WITH RAW SEWAGE IN SMALL DIAMETER SEWERS. THOSE WHO WORK INSIDE RECENTLY ACTIVE, LARGE DIAMETER SEWERS, AND ALL RECENTLY ACTIVE SEWER MANHOLES SHAL RECEIVE $5.00 PER DAY ABOVE GROUP 1 WAGE RATES. GROUP 1-D: MAINTENANCE AND REPAIR TRACK AND ROAD BEDS. ALL EMPLOYEES PERFORMING WORK COVERED HEREIN SHALL RECEIVE $0.25 PER HOUR ABOVE THEIR REGULAR RATE FOR ALL WORK PERFORMED ON UNDERGROUND STRUCTURES NOT SPECIFICALLY COVERED HEREIN. THIS PARAGRAPH SHALL NOT BE CONSTRUED TO APPLY TO WORK BELOW GROUND LEVEL IN OPEN CUT. IT SHALL APPLY TO CUT AND COVER WORK OF SUBWAY

CONSTRUCTION AFTER THE TEMPORARY COVER HAS BEEN PLACED. (CONTRA COSTA COUNTY).....$ 36.25 27.30

LABORER, CONSTRUCTION CRAFT LABORERS: GROUP 4- FINAL CLEAN-UP WORK OF DEBRIS, GROUNDS AND BUILDING INCLUDING BUT NOT LIMITED TO: STREET CLEANER; CLEANING AND WASHING WINDOWS; BRICK CLEANER (JOBSITE ONLY); MATERIAL CLEANER (JOBSITE ONLY). THE CLASSIFICATION ""MATERIAL CLEANER"" IS TO BE UTILIZED UNDER THE FOLLOWING CONDITIONS: A: AT DEMOLITION SITE FOR THE SALVAGE OF THE MATERIAL. B: AT THE CONCLUSION OF A JOB WHERE THE MATERIAL IS TO BE SALVAGED AND STOCKED TO BE REUSED ON ANOTHER JOB. C: FOR THE CLEANING OF SALVAGE MATERIAL AT THE JOBSITE OR TEMPORARY JOBSITE YARD. THE MATERIAL CLEANER CLASSIFICATION SHOULD NOT BE USED IN THE PERFORMANCE OF ""FORM STRIPPING, CLEANING AND OILING AND MOVING TO THE NEXT POINT OF ERECTION"". FOOTNOTES: LABORERS WORKING OFF OR WITH OR FROM BOS'N CHAIRS, SWINGING SCAFFOLDS, BELTS SHALL RECEIVE $0.25 PER HOUR ABOVE THE APPLICABLE WAGE RATE. GROUP 1-B: SEWER CLEANERS SHALL RECEIVE $4.00 PER DAY ABOVE GROUP 1 WAGE RATES. ""SEWER CLEANER"" MEANS ANY WORKER WHO HANDLES OR COMES IN CONTACT WITH RAW SEWAGE IN SMALL DIAMETER SEWERS. THOSE WHO WORK INSIDE RECENTLY ACTIVE, LARGE DIAMETER SEWERS, AND ALL RECENTLY ACTIVE SEWER MANHOLES SHAL RECEIVE $5.00 PER DAY ABOVE GROUP 1 WAGE RATES. GROUP 1-D: MAINTENANCE AND REPAIR TRACK AND ROAD BEDS. ALL EMPLOYEES PERFORMING WORK COVERED HEREIN SHALL RECEIVE $0.25 PER HOUR ABOVE THEIR REGULAR RATE FOR ALL WORK PERFORMED ON UNDERGROUND STRUCTURES NOT SPECIFICALLY COVERED HEREIN. THIS PARAGRAPH SHALL NOT BE CONSTRUED TO APPLY TO WORK BELOW GROUND LEVEL IN OPEN CUT. IT SHALL APPLY TO CUT AND COVER WORK OF SUBWAY CONSTRUCTION AFTER THE TEMPORARY COVER HAS BEEN PLACED. (CONTRA COSTA COUNTY).....$ 29.94 27.30

LABORER, GUNITE: GROUP 1- STRUCTURAL NOZZLEMAN. FOOTNOTES: LABORERS WORKING OFF OR WITH OR FROM BOS'N CHAIRS, SWINGING SCAFFOLDS, BELTS SHALL RECEIVE $0.25 PER HOUR ABOVE THE APPLICABLE WAGE RATE. (CONTRA COSTA COUNTY).....$ 37.46 27.30

LABORER, GUNITE: GROUP 2- NOZZLEMAN, GUNMAN, POTMAN, GROUNDMAN. FOOTNOTES: LABORERS WORKING OFF OR WITH OR FROM BOS'N CHAIRS, SWINGING SCAFFOLDS, BELTS SHALL RECEIVE $0.25 PER HOUR ABOVE THE APPLICABLE WAGE RATE. (CONTRA COSTA COUNTY)....$ 36.96 27.30

LABORER, GUNITE: GROUP 3- REBOUNDMAN. FOOTNOTES: LABORERS WORKING OFF OR WITH OR FROM BOS'N CHAIRS, SWINGING SCAFFOLDS, BELTS SHALL RECEIVE $0.25 PER HOUR ABOVE THE APPLICABLE WAGE RATE. (CONTRA COSTA COUNTY).....$ 36.37 27.30

LABORER, GUNITE: GROUP 4- GUINTE LABORER. FOOTNOTES: LABORERS WORKING OFF OR WITH OR FROM BOS'N CHAIRS, SWINGING SCAFFOLDS, BELTS SHALL RECEIVE $0.25 PER HOUR ABOVE THE APPLICABLE WAGE RATE. (CONTRA COSTA COUNTY).....$ 36.25 27.30

LABORER, WRECKING: GROUP 1- SKILLED WRECKER (REMOVING AND SALVAGING OF SASH, WINDOWS, AND MATERIALS). FOOTNOTES: LABORERS WORKING OFF OR WITH OR FROM BOS'N CHAIRS, SWINGING SCAFFOLDS, BELTS SHALL RECEIVE $0.25 PER HOUR ABOVE THE APPLICABLE WAGE RATE. (CONTRA COSTA COUNTY).....$ 36.50 27.30

LABORER, WRECKING: GROUP 2- SEMI-SKILLED WRECKER (SALVAGING OF OTHER BUILDING MATERIALS).

FOOTNOTES: LABORERS WORKING OFF OR WITH OR FROM BOS'N CHAIRS, SWINGING SCAFFOLDS, BELTS SHALL RECEIVE $0.25 PER HOUR ABOVE THE APPLICABLE WAGE RATE. (CONTRA COSTA COUNTY).....$ 36.35 27.30

LABORER: GARDENERS, HORTICULTURAL & LANDSCAPE LABORERS - (1) New Construction. FOOTNOTES: LABORERS WORKING OFF OR WITH OR FROM BOS'N CHAIRS, SWINGING SCAFFOLDS, BELTS SHALL RECEIVE $0.25 PER HOUR ABOVE THE APPLICABLE WAGE RATE. (CONTRA COSTA COUNTY).....$ 36.25 27.30

LABORER: GARDENERS, HORTICULTURAL & LANDSCAPE LABORERS - (2) Establishment Warranty Period. FOOTNOTES: LABORERS WORKING OFF OR WITH OR FROM BOS'N CHAIRS, SWINGING SCAFFOLDS, BELTS SHALL RECEIVE $0.25 PER HOUR ABOVE THE APPLICABLE WAGE RATE. (CONTRA COSTA COUNTY).....$ 29.94 27.30

LABO0324-014 07/01/2023

	Rates	Fringes
BRICK TENDER. FOOTNOTES: WORK ON JOBS WHERE HEAT-PROTECTIVE CLOTHING IS REQUIRED: $2.00 PER HOUR ADDITIONAL. WORK AT GRINDERS: $.25 PER HOUR ADDITIONAL. MANHOLE WORK: $2.00 PER DAY ADDITIONAL. (CONTRA COSTA COUNTY) .....$	37.05	27.45

LABO0324-018 07/01/2023

	Rates	Fringes
PLASTER TENDER. WORK ON A SWING STAGE SCAFFOLD: $1.00 PER HOUR ADDITIONAL. (ALAMEDA AND CONTRA COSTA COUNTIES).....$	41.93	30.32

LABO1130-002 07/01/2023

	Rates	Fringes
LABORER, TRAFFIC CONTROL/LANE CLOSURE: ESCORT DRIVER, FLAG PERSON (MARIPOSA, MERCED, STANISLAUS, AND TUOLUMNE COUNTIES).....$	36.26	27.30
LABORER, TRAFFIC CONTROL/LANE CLOSURE: TRAFFIC CONTROL PERSON I- LAYOUT OF TRAFFIC CONTROL, CRASH CUSHIONS, CONSTRUCTION AREA AND ROADSIDE SIGNAGE. (MARIPOSA, MERCED, STANISLAUS, AND TUOLUMNE COUNTIES).....$	36.56	27.30
LABORER, TRAFFIC CONTROL/LANE CLOSURE: TRAFFIC CONTROL PERSON II- INSTALLATION AND REMOVAL OF TEMPORARY/PERMANENT SIGNS, MARKERS, DELINEATORS AND CRASH CUSHIONS. (MARIPOSA, MERCED, STANISLAUS, AND TUOLUMNE COUNTIES).....$	34.06	27.30

LABO1130-003 06/26/2023

	Rates	Fringes
TUNNEL AND SHAFT LABORERS: GROUP 1- DIAMOND DRILLER; GROUNDMEN; GUNITE AND SHOTCRETE NOZZLEMEN (MARIPOSA, MERCED, STANISLAUS, AND TUOLUMNE COUNTIES).....$	45.89	27.72
TUNNEL AND SHAFT LABORERS: GROUP 2- RODMEN; SHAFT WORK & RAISE (BELOW ACTUAL OR EXCAVATED GROUND LEVEL) (MARIPOSA, MERCED, STANISLAUS, AND TUOLUMNE COUNTIES).....$	45.66	27.72
TUNNEL AND SHAFT LABORERS: GROUP 3- BIT GRINDER; BLASTER, DRILLER, POWDERMEN, HEADING; CHERRY PICKERMEN - WHERE CAR IS LIFTED; CONCRETE FINISHER IN TUNNEL; CONCRETE SCREEDMAN; GROUT PUMPMAN AND		

POTMAN; GUNITE & SHOTCRETE GUNMAN & POTMAN; HEADERMEN; HIGH PRESSURE NOZZLEMAN; MINER - TUNNEL, INCLUDING TOP AND BOTTOM MAN ON SHAFT AND RAISE WORK; NIPPER; NOZZLEMAN ON SLICK LINE; SANDBLASTER - POTMAN, ROBOTIC SHOTCRETE PLACER, SEGMENT ERECTOR, TUNNEL MUCK HAULER, STEEL FORM RAISER AND SETTER; TIMBERMAN, RETIMBERMAN (WOOD OR STEEL OR SUBSTITUTE MATERIALS THEREFORE); TUGGER (FOR TUNNEL LABORER WORK); CABLE TENDER; CHUCK TENDER; POWDERMAN - PRIMER HOUSE (MARIPOSA, MERCED, STANISLAUS, AND TUOLUMNE COUNTIES).....$ 45.41 27.72

TUNNEL AND SHAFT LABORERS: GROUP 4- VIBRATOR OPERATOR, PAVEMENT BREAKER; BULL GANG - MUCKERS, TRACKMEN; CONCRETE CREW - INCLUDES RODDING AND SPREADING, DUMPMEN (ANY METHOD) (MARIPOSA, MERCED, STANISLAUS, AND TUOLUMNE COUNTIES).....$ 44.96 27.72

TUNNEL AND SHAFT LABORERS: GROUP 5- GROUT CREW; REBOUNDMAN; SWAMPER/ BRAKEMAN (MARIPOSA, MERCED, STANISLAUS, AND TUOLUMNE COUNTIES).....$ 44.42 27.72

TUNNEL AND SHAFT LABORERS: SHOTCRETE SPECIALIST (MARIPOSA, MERCED, STANISLAUS, AND TUOLUMNE COUNTIES).....$ 46.41 27.72

LABO1130-005 07/01/2023

	Rates	Fringes
LABORER: MASON TENDER-BRICK (MARIPOSA, MERCED, STANISLAUS AND TUOLUMNE COUNTIES).....$	36.29	25.55

LABO1130-007 06/26/2023

	Rates	Fringes
LABORER (CONSTRUCTION CRAFT LABORERS) GROUP 1-F- WIRE WINDING MACHINE IN CONNECTION WITH GUNITING OR SHOT CRETE. FOOTNOTES: LABORERS WORKING OFF OR WITH OR FROM BOS'N CHAIRS, SWINGING SCAFFOLDS, BELTS SHALL RECEIVE $0.25 PER HOUR ABOVE THE APPLICABLE WAGE RATE. GROUP 1-B: SEWER CLEANERS SHALL RECEIVE $4.00 PER DAY ABOVE GROUP 1 WAGE RATES. ""SEWER CLEANER"" MEANS ANY WORKER WHO HANDLES OR COMES IN CONTACT WITH RAW SEWAGE IN SMALL DIAMETER SEWERS. THOSE WHO WORK INSIDE RECENTLY ACTIVE, LARGE DIAMETER SEWERS, AND ALL RECENTLY ACTIVE SEWER MANHOLES SHAL RECEIVE $5.00 PER DAY ABOVE GROUP 1 WAGE RATES. GROUP 1-D: MAINTENANCE AND REPAIR TRACK AND ROAD BEDS. ALL EMPLOYEES PERFORMING WORK COVERED HEREIN SHALL RECEIVE $0.25 PER HOUR ABOVE THEIR REGULAR RATE FOR ALL WORK PERFORMED ON UNDERGROUND STRUCTURES NOT SPECIFICALLY COVERED HEREIN. THIS PARAGRAPH SHALL NOT BE CONSTRUED TO APPLY TO WORK BELOW GROUND LEVEL IN OPEN CUT. IT SHALL APPLY TO CUT AND COVER WORK OF SUBWAY CONSTRUCTION AFTER THE TEMPORARY COVER HAS BEEN PLACED. (MARIPOSA, MERCED, STANISLAUS, AND TUOLUMNE COUNTIES).....$	36.08	27.30

LABORER, CONSTRUCTION CRAFT LABORERS: CONSTRUCTION SPECIALIST GROUP- ASPHALT IRONER AND RAKER; CHAINSAW; LASER BEAM IN CONNECTION WITH LABORERS' WORK; CAST-IN- PLACE MANHOLE FORM SETTER; PRESSURE PIPELAYER; DAVIS TRENCHER - 300 OR SIMILAR TYPE (AND ALL SMALL TRENCHERS); BLASTER; DIAMOND DRILLER; MULTIPLE UNIT DRILL; HYDRAULIC DRILL. FOOTNOTES: LABORERS WORKING OFF OR WITH OR FROM BOS'N CHAIRS, SWINGING SCAFFOLDS, BELTS SHALL RECEIVE $0.25 PER HOUR ABOVE THE APPLICABLE WAGE

RATE. GROUP 1-B: SEWER CLEANERS SHALL RECEIVE $4.00 PER DAY ABOVE GROUP 1 WAGE RATES. ""SEWER CLEANER"" MEANS ANY WORKER WHO HANDLES OR COMES IN CONTACT WITH RAW SEWAGE IN SMALL DIAMETER SEWERS. THOSE WHO WORK INSIDE RECENTLY ACTIVE, LARGE DIAMETER SEWERS, AND ALL RECENTLY ACTIVE SEWER MANHOLES SHAL RECEIVE $5.00 PER DAY ABOVE GROUP 1 WAGE RATES. GROUP 1-D: MAINTENANCE AND REPAIR TRACK AND ROAD BEDS. ALL EMPLOYEES PERFORMING WORK COVERED HEREIN SHALL RECEIVE $0.25 PER HOUR ABOVE THEIR REGULAR RATE FOR ALL WORK PERFORMED ON UNDERGROUND STRUCTURES NOT SPECIFICALLY COVERED HEREIN. THIS PARAGRAPH SHALL NOT BE CONSTRUED TO APPLY TO WORK BELOW GROUND LEVEL IN OPEN CUT. IT SHALL APPLY TO CUT AND COVER WORK OF SUBWAY CONSTRUCTION AFTER THE TEMPORARY COVER HAS BEEN PLACED.   (MARIPOSA, MERCED, STANISLAUS, AND TUOLUMNE COUNTIES).....$ 36.20 27.30

LABORER, CONSTRUCTION CRAFT LABORERS: GROUP 1-ASPHALT SPREADER BOXES (ALL TYPES); BARKO, WACKER AND SIMILAR TYPE TAMPERS; BUGGYMOBILE; CAULKER, BANDER, PIPEWRAPPER, CONDUIT LAYER, PLASTIC PIPELAYER; CERTIFIED HAZARDOUS WASTE WORKER INCLUDING LEADE ABATEMENT; COMPACTORS OF ALL TYPES; CONCRETE AND MAGNESITE MIXER, 1/2 YD. AND UNDER; CONCRETE PAN WORK; CONCRETE SANDER; CONCRETE SAW; CRIBBER AND/OR SHORING; CUT GRANITE CURB SETTER; DRI-PAK-IT MACHINE; FALLER, LOGLOADER AND BUCKER; FORM RAISER, SLIP FORMS; GREEN CUTTER; HEADERBOARD, HUBSETTER, ALIGNER, BY ANY METHOD; HIGH PRESSURE BLOW PIPE (1-1/2"" OR OVER, 100 LBS. PRESSURE/OVER); HYDRO SEEDER AND SIMILAR TYPE; JACKHAMMER OPERATOR; JACKING OF PIPE OVER 12 INCHES; JACKSON AND SIMILAR TYPE COMPACTOR; KETTLE TENDER, POT AND WORKER APPLYING ASPHALT, LAY-KOLD, CREOSOTE, LIME, CAUSTIC AND SIMILAR TYPE MATERIALS (APPLYING MEANS APPLYING, DIPPING OR HANDLING OF SUCH MATERIALS); LAGGING, SHEETING, WHALING, BRACING, TRENCHJACKING, LAGGING HAMMER; MAGNESITE, EPOXYRESIN, FIBERGLASS, MASTIC WORKER (WET OR DRY); NO JOINT PIPE AND STRIPPING OF SAME, INCLUDING REPAIR OF VOIDS; PAVEMENT BREAKER AND SPADER, INCLUDING TOOL GRINDER; PERMA CURB; PIPELAYER (INCLUDING GRADE CHECKING IN CONNECTION WITH PIPELAYING); PRECAST-MANHOLE SETTER; PRESSURE PIPE TESTER; POST HOLE DIGGER, AIR, GAS AND ELECTRIC; POWER BROOM SWEEPER; POWER TAMPERS OF ALL TYPES (EXCEPT AS SHOWN IN GROUP 2); RAM SET GUN AND STUD GUN; RIPRAP STONEPAVER AND ROCK-SLINGER, INCLUDING PLACING OF SACKED CONCRETE AND/OR SAND (WET OR DRY) AND GABIONS AND SIMILAR TYPE; ROTARY SCARIFIER OR MULTIPLE HEAD CONCRETE CHIPPING SCARIFIER; ROTO AND DITCH WITCH; ROTOTILLER; SANDBLASTER, POT, GUN, NOZZLE OPERATORS; SIGNALLING AND RIGGING; TANK CLEANER; TREE CLIMBER; TURBO BLASTER; VIBRASCREED, BULL FLOAT IN CONNECTION WITH LABORERS' WORK; VIBRATOR; HAZARDOUS WASTE WORKER (LEAD REMOVAL); ASBESTOS AND MOLD REMOVAL WORKER. FOOTNOTES: LABORERS WORKING OFF OR WITH OR FROM BOS'N CHAIRS, SWINGING SCAFFOLDS, BELTS SHALL RECEIVE $0.25 PER HOUR ABOVE THE APPLICABLE WAGE RATE. GROUP 1-B: SEWER CLEANERS SHALL RECEIVE $4.00 PER DAY ABOVE GROUP 1 WAGE RATES. ""SEWER CLEANER"" MEANS ANY WORKER WHO HANDLES OR COMES IN CONTACT WITH RAW SEWAGE IN SMALL DIAMETER SEWERS. THOSE WHO WORK

INSIDE RECENTLY ACTIVE, LARGE DIAMETER SEWERS, AND ALL RECENTLY ACTIVE SEWER MANHOLES SHAL RECEIVE $5.00 PER DAY ABOVE GROUP 1 WAGE RATES. GROUP 1-D: MAINTENANCE AND REPAIR TRACK AND ROAD BEDS. ALL EMPLOYEES PERFORMING WORK COVERED HEREIN SHALL RECEIVE $0.25 PER HOUR ABOVE THEIR REGULAR RATE FOR ALL WORK PERFORMED ON UNDERGROUND STRUCTURES NOT SPECIFICALLY COVERED HEREIN. THIS PARAGRAPH SHALL NOT BE CONSTRUED TO APPLY TO WORK BELOW GROUND LEVEL IN OPEN CUT. IT SHALL APPLY TO CUT AND COVER WORK OF SUBWAY CONSTRUCTION AFTER THE TEMPORARY COVER HAS BEEN PLACED. (MARIPOSA, MERCED, STANISLAUS, AND TUOLUMNE COUNTIES).....$ 35.50 27.30

LABORER, CONSTRUCTION CRAFT LABORERS: GROUP 1-A- JOY DRILL MODEL TWM-2A; GARDNER-DENVER MODEL DH143 AND SIMILAR TYPE DRILLS; TRACK DRILLER; JACK LEG DRILLER; WAGON DRILLER; MECHANICAL DRILLERS, ALL TYPES REGARDLESS OF TYPE OR METHOD OF POWER; MECHANICAL PIPE LAYERS, ALL TYPES REGARDLESS OF TYPE OR METHOD OF POWER; BLASTER AND POWDER; ALL WORK OF LOADING, PLACING AND BLASTING OF ALL POWDER AND EXPLOSIVES OF WHATEVER TYPE REGARDLESS OF METHOD USED FOR SUCH LOADING AND PLACING; HIGH SCALERS (INCLUDING DRILLING OF SAME); TREE TOPPER; BIT GRINDER. GROUP 1-B: SEWER CLEANERS SHALL RECEIVE $4.00 PER DAY ABOVE GROUP 1 WAGE RATES. ""SEWER CLEANER"" MEANS ANY WORKER WHO HANDLES OR COMES IN CONTACT WITH RAW SEWAGE IN SMALL DIAMETER SEWERS. THOSE WHO WORK INSIDE RECENTLY ACTIVE, LARGE DIAMETER SEWERS, AND ALL RECENTLY ACTIVE SEWER MANHOLES SHAL RECEIVE $5.00 PER DAY ABOVE GROUP 1 WAGE RATES. GROUP 1-D: MAINTENANCE AND REPAIR TRACK AND ROAD BEDS. ALL EMPLOYEES PERFORMING WORK COVERED HEREIN SHALL RECEIVE $0.25 PER HOUR ABOVE THEIR REGULAR RATE FOR ALL WORK PERFORMED ON UNDERGROUND STRUCTURES NOT SPECIFICALLY COVERED HEREIN. THIS PARAGRAPH SHALL NOT BE CONSTRUED TO APPLY TO WORK BELOW GROUND LEVEL IN OPEN CUT. IT SHALL APPLY TO CUT AND COVER WORK OF SUBWAY CONSTRUCTION AFTER THE TEMPORARY COVER HAS BEEN PLACED. (MARIPOSA, MERCED, STANISLAUS, AND TUOLUMNE COUNTIES).....$ 35.72 27.30

LABORER, CONSTRUCTION CRAFT LABORERS: GROUP 1-C- BURNING AND WELDING IN CONNECTION WITH LABORERS' WORK; SYNTHETIC THERMOPLASTICS AND SIMILAR TYPE WELDING. FOOTNOTES: LABORERS WORKING OFF OR WITH OR FROM BOS'N CHAIRS, SWINGING SCAFFOLDS, BELTS SHALL RECEIVE $0.25 PER HOUR ABOVE THE APPLICABLE WAGE RATE. GROUP 1-B: SEWER CLEANERS SHALL RECEIVE $4.00 PER DAY ABOVE GROUP 1 WAGE RATES. ""SEWER CLEANER"" MEANS ANY WORKER WHO HANDLES OR COMES IN CONTACT WITH RAW SEWAGE IN SMALL DIAMETER SEWERS. THOSE WHO WORK INSIDE RECENTLY ACTIVE, LARGE DIAMETER SEWERS, AND ALL RECENTLY ACTIVE SEWER MANHOLES SHAL RECEIVE $5.00 PER DAY ABOVE GROUP 1 WAGE RATES. GROUP 1-D: MAINTENANCE AND REPAIR TRACK AND ROAD BEDS. ALL EMPLOYEES PERFORMING WORK COVERED HEREIN SHALL RECEIVE $0.25 PER HOUR ABOVE THEIR REGULAR RATE FOR ALL WORK PERFORMED ON UNDERGROUND STRUCTURES NOT SPECIFICALLY COVERED HEREIN. THIS PARAGRAPH SHALL NOT BE CONSTRUED TO APPLY TO WORK BELOW GROUND LEVEL IN OPEN CUT. IT SHALL APPLY TO CUT AND COVER WORK OF SUBWAY CONSTRUCTION AFTER THE TEMPORARY COVER HAS BEEN PLACED. (MARIPOSA, MERCED, STANISLAUS, AND

TUOLUMNE COUNTIES).....$ 35.55 27.30
LABORER, CONSTRUCTION CRAFT LABORERS: GROUP 1-E-
WORK ON AND/OR IN BELL HOLE FOOTINGS AND SHAFTS
THEREOF, AND WORK ON AND IN DEEP FOOTINGS. (A DEEP
FOOTING IS A HOLE 15 FEET OR MORE IN DEPTH.) IN
THE EVENT THE DEPTH OF THE FOOTING IS UNKNOWN AT
THE COMMENCEMENT OF EXCAVATION, AND THE FINAL DEPTH
EXCEEDS 15 FEET, THE DEEP FOOTING WAGE RATE WOULD
APPLY TO ALL EMPLOYEES FOR EACH AND EVERY DAY
WORKED ON OR IN THE EXCAVATION OF THE FOOTING FROM
THE DATE OF INCEPTION. FOOTNOTES: LABORERS WORKING
OFF OR WITH OR FROM BOS'N CHAIRS, SWINGING
SCAFFOLDS, BELTS SHALL RECEIVE $0.25 PER HOUR ABOVE
THE APPLICABLE WAGE RATE. GROUP 1-B: SEWER
CLEANERS SHALL RECEIVE $4.00 PER DAY ABOVE GROUP 1
WAGE RATES. ""SEWER CLEANER"" MEANS ANY WORKER WHO
HANDLES OR COMES IN CONTACT WITH RAW SEWAGE IN
SMALL DIAMETER SEWERS. THOSE WHO WORK INSIDE
RECENTLY ACTIVE, LARGE DIAMETER SEWERS, AND ALL
RECENTLY ACTIVE SEWER MANHOLES SHAL RECEIVE $5.00
PER DAY ABOVE GROUP 1 WAGE RATES. GROUP 1-D:
MAINTENANCE AND REPAIR TRACK AND ROAD BEDS. ALL
EMPLOYEES PERFORMING WORK COVERED HEREIN SHALL
RECEIVE $0.25 PER HOUR ABOVE THEIR REGULAR RATE FOR
ALL WORK PERFORMED ON UNDERGROUND STRUCTURES NOT
SPECIFICALLY COVERED HEREIN. THIS PARAGRAPH SHALL
NOT BE CONSTRUED TO APPLY TO WORK BELOW GROUND
LEVEL IN OPEN CUT. IT SHALL APPLY TO CUT AND COVER
WORK OF SUBWAY CONSTRUCTION AFTER THE TEMPORARY
COVER HAS BEEN PLACED. (MARIPOSA, MERCED,
STANISLAUS, AND TUOLUMNE COUNTIES).....$ 36.05 27.30
LABORER, CONSTRUCTION CRAFT LABORERS: GROUP 2-
ASPHALT SHOVELER; CEMENT DUMPER AND HANDLING DRY
CEMENT OR GYPSUM; CHOKE-SETTER AND RIGGER (CLEARING
WORK); CONCRETE BUCKET DUMPER AND CHUTE; CONCRETE
CHIPPING AND GRINDING; CONCRETE LABORER (WET OR
DRY); DRILLER TENDER, CHUCK TENDER, NIPPER; GUINEA
CHASER (STAKE), GROUT CREW; HIGH PRESSURE NOZZLE,
ADDUCTOR; HYDRAULIC MONITOR (OVER 100 LBS.
PRESSURE); LOADING AND UNLOADING, CARRYING AND
HAULING OF ALL RODS AND MATERIALS FOR USE IN
REINFORCING CONCRETE CONSTRUCTION; PITTSBURGH
CHIPPER AND SIMILAR TYPE BRUSH SHREDDERS; SLOPER;
SINGLE FOOT, HAND-HELD, PNEUMATIC TAMPER; ALL
PNEUMATIC, AIR, GAS AND ELECTRIC TOOLS NOT LISTED
IN GROUPS 1 THROUGH 1-F; JACKING OF PIPE - UNDER 12
INCHES. FOOTNOTES: LABORERS WORKING OFF OR WITH
OR FROM BOS'N CHAIRS, SWINGING SCAFFOLDS, BELTS
SHALL RECEIVE $0.25 PER HOUR ABOVE THE APPLICABLE
WAGE RATE. GROUP 1-B: SEWER CLEANERS SHALL RECEIVE
$4.00 PER DAY ABOVE GROUP 1 WAGE RATES. ""SEWER
CLEANER"" MEANS ANY WORKER WHO HANDLES OR COMES IN
CONTACT WITH RAW SEWAGE IN SMALL DIAMETER SEWERS.
THOSE WHO WORK INSIDE RECENTLY ACTIVE, LARGE
DIAMETER SEWERS, AND ALL RECENTLY ACTIVE SEWER
MANHOLES SHAL RECEIVE $5.00 PER DAY ABOVE GROUP 1
WAGE RATES. GROUP 1-D: MAINTENANCE AND REPAIR
TRACK AND ROAD BEDS. ALL EMPLOYEES PERFORMING WORK
COVERED HEREIN SHALL RECEIVE $0.25 PER HOUR ABOVE
THEIR REGULAR RATE FOR ALL WORK PERFORMED ON
UNDERGROUND STRUCTURES NOT SPECIFICALLY COVERED
HEREIN. THIS PARAGRAPH SHALL NOT BE CONSTRUED TO
APPLY TO WORK BELOW GROUND LEVEL IN OPEN CUT. IT
SHALL APPLY TO CUT AND COVER WORK OF SUBWAY
CONSTRUCTION AFTER THE TEMPORARY COVER HAS BEEN

PLACED. (MARIPOSA, MERCED, STANISLAUS, AND TUOLUMNE COUNTIES).....$ 35.35 27.30

LABORER, CONSTRUCTION CRAFT LABORERS: GROUP 3- CONSTRUCTION LABORERS, INCLUDING BRIDGE AND GENERAL LABORER; DUMP, LOAD SPOTTER; FLAG PERSON; FIRE WATCHER; FENCE ERECTOR; GUARDRAIL ERECTOR; GARDENER, HORTICULTURAL AND LANDSCAPE LABORER; JETTING; LIMBER, BRUSH LOADER AND PILER; PAVEMENT MARKER (BUTTON SETTER); MAINTENANCE, REPAIR TRACK AND ROAD BEDS; STREETCAR AND RAILROAD CONSTRUCTION TRACK LABORER; TEMPORARY AIR AND WATER LINES, VICTAULIC OR SIMILAR; TOOL ROOM ATTENDANT (JOBSITE ONLY). FOOTNOTES: LABORERS WORKING OFF OR WITH OR FROM BOS'N CHAIRS, SWINGING SCAFFOLDS, BELTS SHALL RECEIVE $0.25 PER HOUR ABOVE THE APPLICABLE WAGE RATE. GROUP 1-B: SEWER CLEANERS SHALL RECEIVE $4.00 PER DAY ABOVE GROUP 1 WAGE RATES. ""SEWER CLEANER"" MEANS ANY WORKER WHO HANDLES OR COMES IN CONTACT WITH RAW SEWAGE IN SMALL DIAMETER SEWERS. THOSE WHO WORK INSIDE RECENTLY ACTIVE, LARGE DIAMETER SEWERS, AND ALL RECENTLY ACTIVE SEWER MANHOLES SHAL RECEIVE $5.00 PER DAY ABOVE GROUP 1 WAGE RATES. GROUP 1-D: MAINTENANCE AND REPAIR TRACK AND ROAD BEDS. ALL EMPLOYEES PERFORMING WORK COVERED HEREIN SHALL RECEIVE $0.25 PER HOUR ABOVE THEIR REGULAR RATE FOR ALL WORK PERFORMED ON UNDERGROUND STRUCTURES NOT SPECIFICALLY COVERED HEREIN. THIS PARAGRAPH SHALL NOT BE CONSTRUED TO APPLY TO WORK BELOW GROUND LEVEL IN OPEN CUT. IT SHALL APPLY TO CUT AND COVER WORK OF SUBWAY CONSTRUCTION AFTER THE TEMPORARY COVER HAS BEEN PLACED. (MARIPOSA, MERCED, STANISLAUS, AND TUOLUMNE COUNTIES).....$ 35.25 27.30

LABORER, CONSTRUCTION CRAFT LABORERS: GROUP 4- FINAL CLEAN-UP WORK OF DEBRIS, GROUNDS AND BUILDING INCLUDING BUT NOT LIMITED TO: STREET CLEANER; CLEANING AND WASHING WINDOWS; BRICK CLEANER (JOBSITE ONLY); MATERIAL CLEANER (JOBSITE ONLY). THE CLASSIFICATION ""MATERIAL CLEANER"" IS TO BE UTILIZED UNDER THE FOLLOWING CONDITIONS: A: AT DEMOLITION SITE FOR THE SALVAGE OF THE MATERIAL. B: AT THE CONCLUSION OF A JOB WHERE THE MATERIAL IS TO BE SALVAGED AND STOCKED TO BE REUSED ON ANOTHER JOB. C: FOR THE CLEANING OF SALVAGE MATERIAL AT THE JOBSITE OR TEMPORARY JOBSITE YARD. THE MATERIAL CLEANER CLASSIFICATION SHOULD NOT BE USED IN THE PERFORMANCE OF ""FORM STRIPPING, CLEANING AND OILING AND MOVING TO THE NEXT POINT OF ERECTION"". FOOTNOTES: LABORERS WORKING OFF OR WITH OR FROM BOS'N CHAIRS, SWINGING SCAFFOLDS, BELTS SHALL RECEIVE $0.25 PER HOUR ABOVE THE APPLICABLE WAGE RATE. GROUP 1-B: SEWER CLEANERS SHALL RECEIVE $4.00 PER DAY ABOVE GROUP 1 WAGE RATES. ""SEWER CLEANER"" MEANS ANY WORKER WHO HANDLES OR COMES IN CONTACT WITH RAW SEWAGE IN SMALL DIAMETER SEWERS. THOSE WHO WORK INSIDE RECENTLY ACTIVE, LARGE DIAMETER SEWERS, AND ALL RECENTLY ACTIVE SEWER MANHOLES SHAL RECEIVE $5.00 PER DAY ABOVE GROUP 1 WAGE RATES. GROUP 1-D: MAINTENANCE AND REPAIR TRACK AND ROAD BEDS. ALL EMPLOYEES PERFORMING WORK COVERED HEREIN SHALL RECEIVE $0.25 PER HOUR ABOVE THEIR REGULAR RATE FOR ALL WORK PERFORMED ON UNDERGROUND STRUCTURES NOT SPECIFICALLY COVERED HEREIN. THIS PARAGRAPH SHALL NOT BE CONSTRUED TO APPLY TO WORK BELOW GROUND

LEVEL IN OPEN CUT. IT SHALL APPLY TO CUT AND COVER WORK OF SUBWAY CONSTRUCTION AFTER THE TEMPORARY COVER HAS BEEN PLACED. (MARIPOSA, MERCED, STANISLAUS, AND TUOLUMNE COUNTIES).....$ 28.94 27.30

LABORER, GUNITE: GROUP 1- STRUCTURAL NOZZLEMAN. FOOTNOTES: LABORERS WORKING OFF OR WITH OR FROM BOS'N CHAIRS, SWINGING SCAFFOLDS, BELTS SHALL RECEIVE $0.25 PER HOUR ABOVE THE APPLICABLE WAGE RATE. (MARIPOSA, MERCED, STANISLAUS, AND TUOLUMNE COUNTIES).....$ 36.46 27.30

LABORER, GUNITE: GROUP 2- NOZZLEMAN, GUNMAN, POTMAN, GROUNDMAN. FOOTNOTES: LABORERS WORKING OFF OR WITH OR FROM BOS'N CHAIRS, SWINGING SCAFFOLDS, BELTS SHALL RECEIVE $0.25 PER HOUR ABOVE THE APPLICABLE WAGE RATE. (MARIPOSA, MERCED, STANISLAUS, AND TUOLUMNE COUNTIES).....$ 35.96 27.30

LABORER, GUNITE: GROUP 3- REBOUNDMAN. FOOTNOTES: LABORERS WORKING OFF OR WITH OR FROM BOS'N CHAIRS, SWINGING SCAFFOLDS, BELTS SHALL RECEIVE $0.25 PER HOUR ABOVE THE APPLICABLE WAGE RATE. (MARIPOSA, MERCED, STANISLAUS, AND TUOLUMNE COUNTIES).....$ 35.37 27.30

LABORER, GUNITE: GROUP 4- GUINTE LABORER. FOOTNOTES: LABORERS WORKING OFF OR WITH OR FROM BOS'N CHAIRS, SWINGING SCAFFOLDS, BELTS SHALL RECEIVE $0.25 PER HOUR ABOVE THE APPLICABLE WAGE RATE. (MARIPOSA, MERCED, STANISLAUS, AND TUOLUMNE COUNTIES).....$ 35.25 27.30

LABORER, WRECKING: GROUP 1- SKILLED WRECKER (REMOVING AND SALVAGING OF SASH, WINDOWS, AND MATERIALS). FOOTNOTES: LABORERS WORKING OFF OR WITH OR FROM BOS'N CHAIRS, SWINGING SCAFFOLDS, BELTS SHALL RECEIVE $0.25 PER HOUR ABOVE THE APPLICABLE WAGE RATE. (MARIPOSA, MERCED, STANISLAUS, AND TUOLUMNE COUNTIES).....$ 35.50 27.30

LABORER, WRECKING: GROUP 2- SEMI-SKILLED WRECKER (SALVAGING OF OTHER BUILDING MATERIALS). FOOTNOTES: LABORERS WORKING OFF OR WITH OR FROM BOS'N CHAIRS, SWINGING SCAFFOLDS, BELTS SHALL RECEIVE $0.25 PER HOUR ABOVE THE APPLICABLE WAGE RATE. (MARIPOSA, MERCED, STANISLAUS, AND TUOLUMNE COUNTIES).....$ 35.35 27.30

LABORER: GARDENERS, HORTICULTURAL & LANDSCAPE LABORERS - (1) New Construction. FOOTNOTES: LABORERS WORKING OFF OR WITH OR FROM BOS'N CHAIRS, SWINGING SCAFFOLDS, BELTS SHALL RECEIVE $0.25 PER HOUR ABOVE THE APPLICABLE WAGE RATE. (MARIPOSA, MERCED, STANISLAUS, AND TUOLUMNE COUNTIES).....$ 35.25 27.30

LABORER: GARDENERS, HORTICULTURAL & LANDSCAPE LABORERS - (2) Establishment Warranty Period. FOOTNOTES: LABORERS WORKING OFF OR WITH OR FROM BOS'N CHAIRS, SWINGING SCAFFOLDS, BELTS SHALL RECEIVE $0.25 PER HOUR ABOVE THE APPLICABLE WAGE RATE. (MARIPOSA, MERCED, STANISLAUS, AND TUOLUMNE COUNTIES).....$ 28.94 27.30

LABO1130-008 07/01/2023

	Rates	Fringes
LABORER, PLASTER TENDER. WORK ON A SWING STAGE SCAFFOLD: $1.00 PER HOUR ADDITIONAL. (CALAVERAS, FRESNO, KINGS, MADERA, MARIPOSA, MERCED, SAN JOAQUIN, STANISLAUS, & TUOLUMNE COUNTIES) .....$	39.77	28.54

LABO1130-009 07/01/2023

	Rates	Fringes
LABORER, PLASTER TENDER. WORK ON A SWING STAGE SCAFFOLD: $1.00 PER HOUR ADDITIONAL. (MARIPOSA, MERCED, STANISLAUS, AND TUOLUMNE COUNTIES)	$ 39.77	28.54

PAIN0016-001 01/01/2025

	Rates	Fringes
PAINTERS. PREMIUMS: EXOTIC MATERIALS - $1.25 ADDITIONAL PER HOUR. SPRAY WORK: - $0.50 ADDITIONAL PER HOUR. INDUSTRIAL PAINTING - $0.25 ADDITIONAL PER HOUR [WORK ON INDUSTRIAL BUILDINGS USED FOR THE MANUFACTURE AND PROCESSING OF GOODS FOR SALE OR SERVICE; STEEL CONSTRUCTION (BRIDGES), STACKS, TOWERS, TANKS, AND SIMILAR STRUCTURES]. HIGH WORK: OVER 50 FEET - $2.00 PER HOUR ADDITIONAL 100 TO 180 FEET - $4.00 PER HOUR ADDITIONAL OVER 180 FEET - $6.00 PER HOUIR ADDITIONAL (ALAMEDA, CONTRA COSTA, MONTEREY, SAN BENITO, SAN MATEO, SANTA CLARA, AND SANTA CRUZ COUNTIES)	$ 53.38	28.04

PAIN0016-003 01/01/2025

	Rates	Fringes
DRYWALL FINISHER/TAPER. (ALAMDEA, CONTRA COSTA, SAN FRANCISCO, SAN MATEO, & SANTA CLARA COUNTIES)	$ 63.76	32.69
DRYWALL FINISHER/TAPER. (CALAVERAS, MARIPOSA, MERCED, MONTEREY, SAN BENITO, SAN JOAQUIN, SANTA CRUZ, STANISLAUS, & TUOLUMNE COUNTIES)	$ 59.63	31.29

PAIN0016-012 01/01/2024

	Rates	Fringes
SOFT FLOOR LAYER (ALAMEDA, CONTRA COSTA, MARIPOSA, MERCED, MONTEREY, SAN BENITO, SAN FRANCISCO, SAN MATEO, SANTA CLARA AND SANTA CRUZ COUNTIES)	$ 59.00	33.03

PAIN0016-015 01/01/2025

	Rates	Fringes
PAINTER: BRUSH. FOOTNOTES: SPRAY/SANDBLAST: $0.50 ADDITIONAL PER HOUR. EXOTIC MATERIALS: $1.25 ADDITIONAL PER HOUR. HIGH TIME: OVER 50 FT ABOVE GROUND OR WATER LEVEL $2.00 ADDITIONAL PER HOUR. 100 TO 180 FT ABOVE GROUND OR WATER LEVEL $4.00 ADDITIONAL PER HOUR. OVER 180 FT ABOVE GROUND OR WATER LEVEL $6.00 ADDITIONAL PER HOUR. (CALAVERAS, MARIPOSA, MERCED, SAN JOAQUIN, STANISLAUS & TUOLUMNE COUNTIES)	$ 43.45	22.80

PAIN0016-022 01/01/2025

	Rates	Fringes
PAINTER (SAN FRANCISCO COUNTY)	$ 57.00	28.04

PAIN0169-001 01/01/2023

	Rates	Fringes
GLAZIER (FRESNO, KINGS, MADERA, MARIPOSA AND MERCED COUNTIES)	$ 44.33	28.88

PAIN0169-005 01/01/2024

	Rates	Fringes

GLAZIER (ALAMEDA CONTRA COSTA, MONTEREY, SAN BENITO, SAN FRANCISCO, SAN MATEO, SANTA CLARA & SANTA CRUZ COUNTIES).....$ 56.22 34.00

PAIN0294-004 07/01/2023

	Rates	Fringes
PAINTER: BRUSH, ROLLER. FOOTNOTE: SPRAY PAINTERS & PAPERHANGERS RECIVE $1.00 ADDITIONAL PER HOUR. PAINTERS DOING DRYWALL PATCHING RECEIVE $1.25 ADDITIONAL PER HOUR. LEAD ABATERS & SANDBLASTERS RECEIVE $1.50 ADDITIONAL PER HOUR. HIGH TIME - OVER 30 FEET (DOES NOT INCLUDE WORK FROM A LIFT) $0.75 PER HOUR ADDITIONAL. (FRESNO, KINGS AND MADERA COUNTIES)	$ 34.49	21.80
PAINTER: DRYWALL FINISHER/TAPER. FOOTNOTE: SPRAY PAINTERS & PAPERHANGERS RECIVE $1.00 ADDITIONAL PER HOUR. PAINTERS DOING DRYWALL PATCHING RECEIVE $1.25 ADDITIONAL PER HOUR. LEAD ABATERS & SANDBLASTERS RECEIVE $1.50 ADDITIONAL PER HOUR. HIGH TIME - OVER 30 FEET (DOES NOT INCLUDE WORK FROM A LIFT) $0.75 PER HOUR ADDITIONAL. (FRESNO, KINGS AND MADERA COUNTIES)	$ 35.74	21.80

PAIN0294-005 01/01/2023

	Rates	Fringes
SOFT FLOOR LAYER (FRESNO, KINGS & MADERA COUNTIES)	$ 38.53	23.19

PAIN0767-001 01/01/2024

	Rates	Fringes
GLAZIER. PAID HOLIDAYS: NEW YEAR'S DAY, MARTIN LUTHER KING, JR. DAY, PRESIDENT'S DAY, MEMORIAL DAY, INDEPENDENCE DAY, LABOR DAY, VETERAN'S DAY, THANKSGIVING DAY, AND CHRISTMAS DAY. EMPLOYEE REQUIRED TO WEAR A BODY HARNESS SHALL RECEIVE $1.50 PER HOUR ABOVE THE BASIC HOURLY RATE AT ANY ELEVATION. (CALAVERAS, SAN JOAQUIN, STANISLAUS AND TUOLUMNE COUNTIES)	$ 43.25	35.62

PAIN1176-001 07/01/2022

	Rates	Fringes
PARKING LOT STRIPING/HIGHWAY MARKING: HIGHWAY IMPROVEMEMT: GROUP 2- GAMECOURT & PLAYGROUND INSTALLER	$ 34.71	17.62
PARKING LOT STRIPING/HIGHWAY MARKING: HIGHWAY IMPROVEMENT: GROUP 1- STRIPER: LAYOUT AND APPLICATION OF PAINTED TRAFFIC STRIPES AND MARKING; HOT THERMO PLASTIC; TAPE, TRAFFIC STRIPES AND MARKINGS	$ 40.83	17.62
PARKING LOT STRIPING/HIGHWAY MARKING: HIGHWAY IMPROVEMENT: GROUP 3- PROTECTIVE COATING, PAVEMENT SEALING	$ 35.11	17.62

PAIN1237-003 01/01/2024

	Rates	Fringes
SOFT FLOOR LAYER (CALAVERAS; SAN JOAQUIN COUNTIES; STANISLAUS AND TUOLUMNE COUNTIES)	$ 48.54	26.59

PLAS0066-002 07/01/2019

	Rates	Fringes

PLASTERER (ALAMEDA, CONTRA COSTA, SAN MATEO AND SAN FRANCISCO COUNTIES).....$ 42.41 30.73

PLAS0300-001 07/01/2018

	Rates	Fringes
PLASTERER (AREA 188: FRESNO)	$ 32.70	31.68
PLASTERER (AREA 224: SAN BENITO, SANTA CLARA, SANTA CRUZ)	$ 32.88	31.68
PLASTERER (AREA 295: CALAVERAS & SAN JOAQUIN COUNTIES)	$ 32.70	31.68
PLASTERER (AREA 337: MONTEREY COUNTY)	$ 32.88	31.68
PLASTERER (AREA 429: MARIPOSA, MERCED, STANISLAUS, TUOLUMNE COUNTIES)	$ 32.70	31.68

PLAS0300-005 07/01/2016

	Rates	Fringes
CEMENT MASON/CONCRETE FINISHER	$ 32.15	23.27

PLUM0038-001 07/01/2023

	Rates	Fringes
PLUMBER (PLUMBER, STEAMFITTER, REFRIGERATION FITTER) (SAN FRANCISCO COUNTY)	$ 85.50	48.98

PLUM0038-005 07/01/2025

	Rates	Fringes
LANDSCAPE/IRRIGATION FITTER: UNDERGROUND/UTILITY FITTER (SAN FRANCISCO COUNTY)	$ 77.35	36.53

PLUM0062-001 01/01/2026

	Rates	Fringes
PLUMBER & STEAMFITTER (MONTEREY AND SANTA CRUZ COUNTIES)	$ 57.75	43.60

PLUM0159-001 07/01/2025

	Rates	Fringes
PLUMBER AND STEAMFITTER: (1) REFRIGERATION (CONTRA COSTA COUNTY)	$ 67.68	49.04
PLUMBER AND STEAMFITTER: (2) ALL OTHER WORK (CONTRA COSTA COUNTY)	$ 68.57	49.04

PLUM0246-001 01/01/2026

	Rates	Fringes
PLUMBER & STEAMFITTER (FRESNO, KINGS & MADERA COUNTIES)	$ 54.50	42.54

PLUM0246-004 01/01/2017

	Rates	Fringes
PLUMBER: PIPE TRADESMAN. (PIPE TRADESMAN SCOPE OF WORK: INSTALLATION OF CORRUGATED METAL PIPING FOR DRAINAGE, AS WELL AS INSTALLATION OF CORRUGATED METAL PIPING FOR CULVERTS IN CONNECTION WITH STORM SEWERS AND DRAINS; GROUTING, DRY PACKING AND DIAPERING OF JOINTS, HOLES OR CHASES INCLUDING PAVING OVER JOINTS, IN PIPING; TEMPORARY PIPING FOR DIRT WORK FOR BUILDING SITE PREPARATION; OPERATING JACK HAMMERS, PAVEMENT BREAKERS, CHIPPING GUNS, CONCRETE SAWS AND SPADES TO CUT HOLES, CHASES AND		

CHANNELS FOR PIPING SYSTEMS; DIGGING, GRADING, BACKFILLING AND GROUND PREPARATION FOR ALL TYPES OF PIPE TO ALL POINTS OF THE JOBSITE; GROUND PREPARATION INCLUDING GROUND LEVELING, LAYOUT AND PLANTING OF SHRUBBERY, TREES AND GROUND COVER, INCLUDING WATERING, MOWING, EDGING, PRUNING AND FERTILIZING, THE BREAKING OF CONCRETE, DIGGING, BACKFILLING AND TAMPING FOR THE PREPARATION AND COMPLETION OF ALL WORK IN CONNECTION WITH LAWN SPRINKLER AND LANDSCAPING; LOADING, UNLOADING AND DISTRIBUTING MATERIALS AT JOBSITE; PUTTING AWAY MATERIALS IN STORAGE BINS IN JOBSITE SECURE STORAGE AREA; DEMOLITION OF PIPING AND FIXTURES FOR REMODELING AND ADDITIONS; SETTING UP AND TEARING DOWN WORK BENCHES, LADDERS AND JOB SHACKS; CLEAN-UP AND SWEEPING OF JOBSITE; PIPE WRAPPING AND WATERPROOFING WHERE TAR OR SIMILAR MATERIAL IS APPLIED FOR PROTECTION OF BURIED PIPING; FLAGMAN)
(FRESNO, MERCED, & SAN JOAQUIN COUNTIES).....$ 13.00 10.74

PLUM0342-001 07/01/2025

	Rates	Fringes
PIPEFITTER (CONTRA COSTA COUNTY).....	$ 80.50	50.45
PLUMBER, PIPEFITTER, STEAMFITTER (ALAMEDA COUNTY)...	$ 80.50	50.45

PLUM0355-004 07/01/2025

	Rates	Fringes
UNDERGROUND UTILITY WORKER /LANDSCAPE FITTER (ALAMEDA, CALAVERAS, CONTRA COSTA, FRESNO, KINGS, MADERA, MARIPOSA, MERCED, MONTEREY, SAN BENITO, SAN JOAQUIN, SAN MATEO, SANTA CLARA, SANTA CRUZ, STANISLAUS, AND TUOLUMNE COUNTIES).....	$ 36.01	18.50

PLUM0393-001 07/01/2021

	Rates	Fringes
PLUMBER/PIPEFITTER (SAN BENITO AND SANTA CLARA COUNTIES).....	$ 68.76	46.63

PLUM0442-001 01/01/2026

	Rates	Fringes
PLUMBER & STEAMFITTER (CALAVERAS, MARIPOSA, MERCED, SAN JOAQUIN, STANISLAUS & TUOLUMNE COUNTIES).....	$ 58.45	38.74

PLUM0467-001 07/01/2025

	Rates	Fringes
PLUMBER/PIPEFITTER/STEAMFITTER (SAN MATEO COUNTY)...	$ 87.75	41.44

ROOF0027-002 09/01/2024

	Rates	Fringes
ROOFER. FOOTNOTE: WORK WITH PITCH, PITCH BASE OF PITCH IMPREGNANTED PRODUCTS OR ANY MATERIAL CONTAINING COAL TAR PITCH, ON ANY BUILDING OLD OR NEW, WHERE BOTH ASPHALT AND PITCHERS ARE USED IN THE APPLICATION OF A BUILT-UP ROOF OR TEAR OFF: $2.00 PER HOUR ADDITIONAL. (FRESNO, KINGS, AND MADERA COUNTIES).....	$ 45.76	16.86

ROOF0040-002 08/01/2024

	Rates	Fringes
ROOFER (SAN FRANCISCO & SAN MATEO COUNTIES)	$ 55.30	22.97

ROOF0081-001 08/01/2024

	Rates	Fringes
ROOFER (ALAMEDA AND CONTRA COSTA COUNTIES)	$ 54.94	23.34

ROOF0081-004 08/01/2024

	Rates	Fringes
ROOFER (CALAVERAS, MARIPOSA, MERCED, SAN JOAQUIN, STANISLAUS AND TUOLUMNE COUNTIES)	$ 49.65	22.19

ROOF0095-002 08/01/2023

	Rates	Fringes
ROOFER: BITUMASTIC, ENAMELER, COAL TAR, PITCH AND MASTIC WORKER (MONTEREY, SAN BENITO, SANTA CLARA, AND SANTA CRUZ COUNTIES)	$ 57.17	21.51
ROOFER: JOURNEYMAN (MONTEREY, SAN BENITO, SANTA CLARA, AND SANTA CRUZ COUNTIES)	$ 53.17	21.51
ROOFER: KETTLE PERSON (2 KETTLES) (MONTEREY, SAN BENITO, SANTA CLARA, AND SANTA CRUZ COUNTIES:)	$ 55.17	21.51

SFCA0483-001 01/01/2026

	Rates	Fringes
SPRINKLER FITTER: FIRE (ALAMEDA, CONTRA COSTA, SAN FRANCISCO, SAN MATEO AND SANTA CLARA COUNTIES)	$ 81.54	41.35

SFCA0669-011 01/01/2026

	Rates	Fringes
SPRINKLER FITTER (CALAVERAS, FRESNO, KINGS, MADERA, MARIPOSA, MERCED, MONTEREY, SAN BENITO, SAN JOAQUIN, SANTA CRUZ, STANISLAUS AND TUOLUMNE COUNTIES)	$ 49.69	29.72

SHEE0104-001 07/01/2025

	Rates	Fringes
SHEET METAL WORKER (MONTEREY & SAN BENITO COUNTIES)	$ 58.52	38.67
SHEET METAL WORKER (SANTA CRUZ COUNTY)	$ 55.16	34.18
SHEET METAL WORKER: ALL OTHER WORK (ALAMEDA, CONTRA COSTA, SAN FRANSICO, SAN MATEO, SANTA CLARA COUNTIES))	$ 64.06	46.83
SHEET METAL WORKER: MECHANICAL CONTRACTS UNDER $200,000 (ALAMEDA, CONTRA COSTA, SAN FRANCISCO, SAN MATEO, SANTA CLARA COUNTIES))	$ 55.92	45.29

SHEE0104-003 07/01/2021

	Rates	Fringes
SHEET METAL WORKER (CALAVERAS AND SAN JOAQUIN COUNTIES)	$ 44.34	39.22

SHEE0104-005 07/01/2021

	Rates	Fringes
SHEET METAL WORKER: EXCLUDING METAL DECK AND SIDING (MARIPOSA, MERCED, STANISLAUS AND TUOLUMNE COUNTIES)	$ 41.28	45.41

SHEE0104-007 07/01/2021

	Rates	Fringes
SHEET METAL WORKER (FRESNO, KINGS, AND MADERA COUNTIES)	$ 44.07	40.79

SHEE0104-015 07/01/2024

	Rates	Fringes
SHEET METAL WORKER: METAL DECKING AND SIDING ONLY. (ALAMEDA, CONTRA COSTA, MONTEREY, SAN BENITO, SAN FRANCISCO, SAN MATEO, SANTA CLARA AND SANTA CRUZ COUNTIES)	$ 56.23	37.52

SHEE0104-018 07/01/2024

	Rates	Fringes
SHEET METAL WORKER: METAL DECKING AND SIDING ONLY. (CALAVERAS, FRESNO, KINGS, MADERA, MARIPOSA, MERCED, SAN JOAQUIN, STANISLAUS AND TUOLUMNE COUNTIES)	$ 56.23	37.52

TEAM0094-001 07/01/2025

	Rates	Fringes
TRUCK DRIVERS: GROUP 1: DUMP TRUCKS, UNDER 6 YDS.; SINGLE UNIT FLAT RACK (2- AXLE UNIT); NIPPER TRUCK (WHEN FLAT RACK TRUCK IS USED APPROPRIATE FLAT RACK SHALL APPLY); CONCRETE PUMP TRUCK (WHEN FLAT RACK TRUCK IS USED APPROPRIATE FLAT RACK SHALL APPLY); CONCRETE PUMP MACHINE; FORK LIFT AND LIFT JITNEYS; FUEL AND/OR GREASE TRUCK DRIVER OR FUEL PERSON; SNOW BUGGY; STEAM CLEANING; BUS OR PERSONHAUL DRIVER; ESCORT OR PILOT CAR DRIVER; PICKUP TRUCK; TEAMSTER OILER/GREASER AND/OR SERVICEPERSON; HOOK TENDER (INCLUDING LOADING AND UNLOADING); TEAM DRIVER; TOOL ROOM ATTENDANT (REFINERIES). FOOTNOTES: ARTICULATED DUMP TRUCK; BULK CEMENT SPREADER (WITH OR WITHOUT AUGER); DUMPCRETE TRUCK; SKID TRUCK (DEBRIS BOX); DRY PRE-BATCH CONCRETE MIX TRUCKS; DUMPSTER OR SIMILAR TYPE; SLURRY TRUCK: USE DUMP TRUCK YARDAGE RATE. HEATER PLANER; ASPHALT BURNER; SCARIFIER BURNER; INDUSTRIAL LIFT TRUCK (MECHANICAL TAILGATE); UTILITY AND CLEAN-UP TRUCK: USE APPROPRIATE RATE FOR THE POWER UNIT OR THE EQUIPMENT UTILIZED.	$ 43.26	34.28
TRUCK DRIVERS: GROUP 2: DUMP TRUCKS, 6 YDS. AND UNDER 8 YDS.; TRANSIT MIXERS, THROUGH 10 YDS.; WATER TRUCKS, UNDER 7,000 GALS.; JETTING TRUCKS, UNDER 7,000 GALS.; SINGLE-UNIT FLAT RACK (3-AXLE UNIT); HIGHBED HEAVY DUTY TRANSPORT; SCISSOR TRUCK; RUBBER-TIRED MUCK CAR (NOT SELF-LOADED); RUBBER-TIRED TRUCK JUMBO; WINCH TRUCK AND ""A"" FRAME DRIVERS; COMBINATION WINCH TRUCK WITH HOIST; ROAD OIL TRUCK OR BOOTPERSON; BUGGYMOBILE; ROSS, HYSTER AND SIMILAR STRADDLE CARRIERS; SMALL RUBBER-TIRED TRACTOR. FOOTNOTES: ARTICULATED DUMP TRUCK; BULK CEMENT SPREADER (WITH OR WITHOUT AUGER); DUMPCRETE TRUCK; SKID TRUCK (DEBRIS BOX); DRY PRE-BATCH CONCRETE MIX TRUCKS; DUMPSTER OR SIMILAR TYPE; SLURRY TRUCK: USE DUMP TRUCK YARDAGE RATE. HEATER PLANER; ASPHALT BURNER; SCARIFIER BURNER; INDUSTRIAL LIFT TRUCK (MECHANICAL TAILGATE); UTILITY AND CLEAN-UP TRUCK: USE APPROPRIATE RATE		

FOR THE POWER UNIT OR THE EQUIPMENT UTILIZED. ......$ 43.56 34.28
TRUCK DRIVERS: GROUP 3: DUMP TRUCKS, 8 YDS. AND INCLUDING 24 YDS.; TRANSIT MIXERS, OVER 10 YDS.; WATER TRUCKS, 7,000 GALS. AND OVER; JETTING TRUCKS, 7,000 GALS. AND OVER; VACUUM TRUCKS UNDER 7500 GALS. TRUCKS TOWING TILT BED OR FLAT BED PULL TRAILERS; LOWBED HEAVY DUTY TRANSPORT; HEAVY DUTY TRANSPORT TILLER PERSON; SELF- PROPELLED STREET SWEEPER WITH SELF-CONTAINED REFUSE BIN; BOOM TRUCK - HYDRO-LIFT OR SWEDISH TYPE EXTENSION OR RETRACTING CRANE; P.B. OR SIMILAR TYPE SELF-LOADING TRUCK; TIRE REPAIRPERSON; COMBINATION BOOTPERSON AND ROAD OILER; DRY DISTRIBUTION TRUCK (A BOOTPERSON WHEN EMPLOYED ON SUCH EQUIPMENT, SHALL RECEIVE THE RATE SPECIFIED FOR THE CLASSIFICATION OF ROAD OIL TRUCKS OR BOOTPERSON); AMMONIA NITRATE DISTRIBUTOR, DRIVER AND MIXER; SNOW GO AND/OR PLOW.
FOOTNOTES: ARTICULATED DUMP TRUCK; BULK CEMENT SPREADER (WITH OR WITHOUT AUGER); DUMPCRETE TRUCK; SKID TRUCK (DEBRIS BOX); DRY PRE-BATCH CONCRETE MIX TRUCKS; DUMPSTER OR SIMILAR TYPE; SLURRY TRUCK: USE DUMP TRUCK YARDAGE RATE. HEATER PLANER; ASPHALT BURNER; SCARIFIER BURNER; INDUSTRIAL LIFT TRUCK (MECHANICAL TAILGATE); UTILITY AND CLEAN-UP TRUCK: USE APPROPRIATE RATE FOR THE POWER UNIT OR THE EQUIPMENT UTILIZED. .....$ 43.86 34.28
TRUCK DRIVERS: GROUP 4: DUMP TRUCKS, OVER 25 YDS. AND UNDER 65 YDS.; WATER PULLS - DW 10'S, 20'S, 21'S AND OTHER SIMILAR EQUIPMENT WHEN PULLING AQUA/PAK OR WATER TANK TRAILERS; HELICOPTER PILOTS (WHEN TRANSPORTING MEN AND MATERIALS); LOWBEDK HEAVY DUTY TRANSPORT UP TO INCLUDING 7 AXLES; DW10'S, 20'S, 21'S AND OTHER SIMILAR CAT TYPE, TERRA COBRA, LETOURNEAU PULLS, TOURNOROCKER, EUCLID AND SIMILAR TYPE EQUIPMENT WHEN PULLING FUEL AND/OR GREASE TANK TRAILERS OR OTHER MISCELLANEOUS TRAILERS; VACUUM TRUCKS 7500 GALS AND OVER AND TRUCK REPAIRMAN. FOOTNOTES: ARTICULATED DUMP TRUCK; BULK CEMENT SPREADER (WITH OR WITHOUT AUGER); DUMPCRETE TRUCK; SKID TRUCK (DEBRIS BOX); DRY PRE-BATCH CONCRETE MIX TRUCKS; DUMPSTER OR SIMILAR TYPE; SLURRY TRUCK: USE DUMP TRUCK YARDAGE RATE. HEATER PLANER; ASPHALT BURNER; SCARIFIER BURNER; INDUSTRIAL LIFT TRUCK (MECHANICAL TAILGATE); UTILITY AND CLEAN-UP TRUCK: USE APPROPRIATE RATE FOR THE POWER UNIT OR THE EQUIPMENT UTILIZED. .....$ 44.21 34.28
TRUCK DRIVERS: GROUP 5: DUMP TRUCKS, 65 YDS. AND OVER; HOLLAND HAULER; LOW BED HEAVY DUTY TRANSPORT OVER 7 AXLES. FOOTNOTES: ARTICULATED DUMP TRUCK; BULK CEMENT SPREADER (WITH OR WITHOUT AUGER); DUMPCRETE TRUCK; SKID TRUCK (DEBRIS BOX); DRY PRE-BATCH CONCRETE MIX TRUCKS; DUMPSTER OR SIMILAR TYPE; SLURRY TRUCK: USE DUMP TRUCK YARDAGE RATE. HEATER PLANER; ASPHALT BURNER; SCARIFIER BURNER; INDUSTRIAL LIFT TRUCK (MECHANICAL TAILGATE); UTILITY AND CLEAN-UP TRUCK: USE APPROPRIATE RATE FOR THE POWER UNIT OR THE EQUIPMENT UTILIZED. ......$ 44.56 34.28

WELDERS - Receive rate prescribed for craft performing operation to which welding is incidental.
==========
Note: Executive Order (EO) 13706, Establishing Paid Sick Leave

for Federal Contractors applies to all contracts subject to the Davis-Bacon Act for which the contract is awarded (and any solicitation was issued) on or after January 1, 2017. If this contract is covered by the EO, the contractor must provide employees with 1 hour of paid sick leave for every 30 hours they work, up to 56 hours of paid sick leave each year. Employees must be permitted to use paid sick leave for their own illness, injury or other health-related needs, including preventive care; to assist a family member (or person who is like family to the employee) who is ill, injured, or has other health-related needs, including preventive care; or for reasons resulting from, or to assist a family member (or person who is like family to the employee) who is a victim of, domestic violence, sexual assault, or stalking. Additional information on contractor requirements and worker protections under the EO is available at https://www.dol.gov/agencies/whd/government-contracts.

Note: Executive Order 13658 generally applies to contracts subject to the Davis-Bacon Act that were awarded on or between January 1, 2015 and January 29, 2022, and that have not been renewed or extended on or after January 30, 2022. Executive Order 13658 does not apply to contracts subject only to the Davis-Bacon Related Acts regardless of when they were awarded. If a contract is subject to Executive Order 13658, the contractor must pay all covered workers at least $13.65 per hour (or the applicable wage rate listed on this wage determination, if it is higher) for all hours spent performing on the contract from May 11, 2026, through December 31, 2026. The applicable Executive Order minimum wage rate will be adjusted annually. Additional information on contractor requirements and worker protections under Executive Order 13658 is available at www.dol.gov/whd/govcontracts.

Unlisted classifications needed for work not included within the scope of the classifications listed may be added after award only as provided in the labor standards contract clauses (29CFR 5.5 (a) (1) (iii)).

The body of each wage determination lists the classifications and wage rates that have been found to be prevailing for the type(s) of construction and geographic area covered by the wage determination. The classifications are listed in alphabetical order under rate identifiers indicating whether the particular rate is a union rate (current union negotiated rate), a survey rate, a weighted union average rate, a state adopted rate, or a supplemental classification rate.

Union Rate Identifiers

A four-letter identifier beginning with characters other than SU, UAVG, SA, or SC denotes that a union rate was prevailing for that classification in the survey. Example: PLUM0198-005 07/01/2024. PLUM is an identifier of the union whose collectively bargained rate prevailed in the survey for this classification, which in this example would be Plumbers. 0198 indicates the local union number or district council number where applicable, i.e., Plumbers Local 0198. The next number, 005 in the example, is an internal number used in processing the wage determination. The date, 07/01/2024 in the example, is the effective date of the most current negotiated rate.

Union prevailing wage rates are updated to reflect all changes over time that are reported to WHD in the rates in the collective bargaining agreement (CBA) governing the classification.

Union Average Rate Identifiers

The UAVG identifier indicates that no single rate prevailed for those classifications, but that 100% of the data reported for the classifications reflected union rates. EXAMPLE: UAVG-OH-0010 01/01/2024. UAVG indicates that the rate is a weighted union average rate. OH indicates the State of Ohio. The next number, 0010 in the example, is an internal number used in producing the wage determination. The date, 01/01/2024 in the example, indicates the date the wage determination was updated to reflect the most current union average rate.

A UAVG rate will be updated once a year, usually in January, to reflect a weighted average of the current rates in the collective bargaining agreements on which the rate is based.

Survey Rate Identifiers

The SU identifier indicates that either a single non-union rate prevailed (as defined in 29 CFR 1.2) for this classification in the survey or that the rate was derived by computing a weighted average rate based on all the rates reported in the survey for that classification. As a weighted average rate includes all rates reported in the survey, it may include both union and non-union rates. Example: SUFL2022-007 6/27/2024. SU indicates the rate is a single non-union prevailing rate or a weighted average of survey data for that classification. FL indicates the State of Florida. 2022 is the year of the survey on which these classifications and rates are based. The next number, 007 in the example, is an internal number used in producing the wage determination. The date, 6/27/2024 in the example, indicates the survey completion date for the classifications and rates under that identifier.

SU wage rates typically remain in effect until a new survey is conducted. However, the Wage and Hour Division (WHD) has the discretion to update such rates under 29 CFR 1.6(c)(1).

State Adopted Rate Identifiers

The SA identifier indicates that the classifications and prevailing wage rates set by a state (or local) government were adopted under 29 C.F.R 1.3(g)-(h). Example: SAME2023-007 01/03/2024. SA reflects that the rates are state adopted. ME refers to the State of Maine. 2023 is the year during which the state completed the survey on which the listed classifications and rates are based. The next number, 007 in the example, is an internal number used in producing the wage determination. The date, 01/03/2024 in the example, reflects the date on which the classifications and rates under the SA identifier took effect under state law in the state from which the rates were adopted.

WAGE DETERMINATION APPEALS PROCESS

1) Has there been an initial decision in the matter? This can be:

- a) a survey underlying a wage determination
- b) an existing published wage determination
- c) an initial WHD letter setting forth a position on a wage determination matter
- d) an initial conformance (additional classification and rate) determination

On survey related matters, initial contact, including requests for summaries of surveys, should be directed to the WHD Branch

of Wage Surveys. Requests can be submitted via email to davisbaconinfo@dol.gov or by mail to:

Branch of Wage Surveys
Wage and Hour Division
U.S. Department of Labor
200 Constitution Avenue, N.W.
Washington, DC 20210

Regarding any other wage determination matter such as conformance decisions, requests for initial decisions should be directed to the WHD Branch of Construction Wage Determinations. Requests can be submitted via email to BCWD-Office@dol.gov or by mail to:

Branch of Construction Wage Determinations
Wage and Hour Division
U.S. Department of Labor
200 Constitution Avenue, N.W.
Washington, DC 20210

2) If an initial decision has been issued, then any interested party (those affected by the action) that disagrees with the decision can request review and reconsideration from the Wage and Hour Administrator (See 29 CFR Part 1.8 and 29 CFR Part 7). Requests for review and reconsideration can be submitted via email to dba.reconsideration@dol.gov or by mail to:

Wage and Hour Administrator
U.S. Department of Labor
200 Constitution Avenue, N.W.
Washington, DC 20210

The request should be accompanied by a full statement of the interested party's position and any information (wage payment data, project description, area practice material, etc.) that the requestor considers relevant to the issue.

3) If the decision of the Administrator is not favorable, an interested party may appeal directly to the Administrative Review Board (formerly the Wage Appeals Board). Write to:

Administrative Review Board
U.S. Department of Labor
200 Constitution Avenue, N.W.
Washington, DC 20210.

==========

END OF GENERAL DECISION"

SC10.11.2 Minimum Wages

A. All laborers and mechanics employed or working upon the site of the work (or under the United States Housing Act of 1937 or under the Housing Act of 1949 in the construction or development of the project) shall be paid unconditionally and not less often than once a week, and without subsequent deduction or rebate on any account [except such payroll deductions as are permitted by regulations issued by the Secretary of Labor under the Copeland Act (29 CFR Part 3)], the full amount of wages and bona fide fringe benefits (or cash equivalents thereof) due at time of payment computed at rates not less than those contained in the wage determination of the Secretary of Labor which is attached hereto and made a part hereof, regardless of any contractual relationship which may be alleged to exist between the Contractor and such laborers and mechanics. Contributions made or costs reasonably anticipated for bona fide fringe benefits under Section 1(b)(2) of the Davis-Bacon Act on behalf of laborers or mechanics are considered wages paid to such laborers or mechanics subject to the provisions of 29 CFR Part 5.5(a)(1)(iv); also, regular contributions made or costs incurred for more than a weekly period (but not less often than quarterly) under plans, funds or programs which cover the particular weekly period, are deemed to be constructively made or incurred during such weekly period. Such laborers and mechanics shall be paid the appropriate wage rate and fringe benefits on the wage determination for the classification of work actually performed, without regard to skill, except as provided in 29 CFR Part 5.5(a)(4). Laborers or mechanics performing work in more than one classification may be compensated at the rate specified for each classification for the time actually worked therein, provided that the employer's payroll records accurately set forth the time spent in each classification in which work is performed. The wage determination and the Davis- Bacon poster (WH-1321) shall be posted at all times by the Contractor and its Subcontractors at the site of the work in a prominent and accessible place where it can be easily seen by the workers.

B. Wherever the minimum wage rate prescribed in the Contract for a class of laborers or mechanics includes a fringe benefit which is not expressed as an hourly rate, the Contractor shall either pay the benefit as stated in the wage determination or shall pay another bona fide fringe benefit or an hourly cash equivalent thereof.

C. If the Contractor does not make payments to a trustee or other third person, the Contractor may consider as part of the wages of any laborer or mechanic the amount of any costs reasonably anticipated in providing bona fide fringe benefits under a plan or program, provided, that the Secretary of Labor has found, upon the written request of the Contractor, that the applicable standards of the Davis-Bacon Act have been met. The Secretary of Labor may require the Contractor to set aside in a separate account assets for the meeting of the obligations under the plan or program.

D. The District's Representative will require that any class of laborers or mechanics, including helpers, which is not listed in the wage determination and which is to be employed under the Contract, shall be classified in conformance with the wage determination. The District's Representative shall approve an additional classification and wage rate and fringe benefits therefore only when the following criteria have been met:
    1. Except with respect to helpers as defined in 29 CFR Part 5.2(n)(4), the work to be performed by the classification requested is not performed by a classification in the wage determination;

    2. The classification is utilized in the area by the construction industry;

    3. The proposed wage rate, including any bona fide fringe benefits, bears a reasonable relationship to the wage rates contained in the wage determination; and

    4. With respect to helpers as defined in 29 CFR Part 5.2(n)(4), such a classification prevails in the area in which the work is performed.

E. If the Contractor and the laborers and mechanics to be employed in the classification (if known) or their representatives, and the District's Representative agree on the classification and wage rate (including the amount

designated for fringe benefits where appropriate), a report of the action taken shall be sent by the District's Representative to the Administrator of the Wage and Hour Division ("Administrator"), Employment Standards Administration, U.S. Department of Labor, Washington D.C. 20210. The Administrator, or an authorized representative, will approve, modify, or disapprove every additional classification action within thirty (30) Days of receipt and so advise the District's Representative or will notify the District's Representative within the thirty (30) day period that additional time is necessary.

F. In the event the Contractor, the laborers or mechanics to be employed in the classification or their representatives, and the District's Representative do not agree on the proposed classification and wage rate (including the amount designated for fringe benefits where appropriate), the District's Representative shall refer the questions, including the views of all interested parties and the recommendation of the District's Representative, to the Administrator for determination. The Administrator, or an authorized representative, will issue a determination within thirty (30) Days of receipt and so advise the District's Representative or will notify the District's Representative within the thirty (30) day period that additional time is necessary.

G. The wage rate (including fringe benefits where appropriate) determined pursuant to Supplementary Conditions Articles SC10.11.2, E and F herein shall be paid to all workers performing work in the classification under this Contract from the first day on which work is performed in the classification.

H. Wherever the minimum wage prescribed in the Contract for a class of laborers or mechanics includes a fringe benefit which is not expressed as an hourly rate, the Contractor shall either pay the benefit as stated in the wage determination or shall pay another bona fide benefit or an hourly cash equivalent thereof.

I. If the Contractor does not make payments to a trustee or other third person, the Contractor may consider as part of the wages of any laborer or mechanic the amount of any costs reasonably anticipated in providing fringe benefits under a plan or program, provided, that the Secretary of Labor has found, upon the written request of the Contractor, that the applicable standards of the Davis- Bacon Act have been met. The Secretary of Labor may require the Contractor to set aside in a separate account assets for the meeting of the obligations under the plan or program.

SC10.11.3 Withholding

The District's Representative may, under his own authority or upon receipt of a written notice from an authorized representative of the Department of Labor, withhold or cause to be withheld from the Contractor under this Contract or any other Federal Contract with the same Contractor, or any other Federally assisted contract subject to Davis- Bacon prevailing wage requirements, which is held by the same prime contractor, so much of the accrued payments or advances as may be considered necessary to pay laborers or mechanics including apprentices, trainees and helpers employed by the Contractor or any Subcontractor the full amount of wages required by the Contract. In the event of failure to pay any laborer or mechanic, including any apprentice, trainee or helper employed or working on the site of the Work (or under the United States Housing Act of 1937 or under the Housing Act of 1949 in the construction or development of the project) all or part of the wages required by the Contract, the District's Representative may, after written notice to the Contractor, take such action as may be necessary to cause the suspension of any further payment, advance, or guarantee of funds until such violations have ceased.

SC10.11.4 Payrolls and Basic Records

A. Payrolls and basic records relating thereto shall be maintained by the Contractor during the course of the work and preserved for a period of three years thereafter for all laborers, mechanics, watchmen and guards working at the site of the Work (or under the United States Housing Act of 1937 or under the Housing Act of 1949 in the construction or development of the project). Such records shall contain the name, social security number, e-mail address and address of each such worker, his or her correct classification, hourly rates of wages paid [including rates of contributions or costs anticipated for bona fide fringe benefits or cash equivalent thereof, of the types described in Section 1(b)(2)(B) of the Davis-Bacon Act], daily and weekly number of hours worked, deductions made and actual wages paid. Whenever the U.S. Secretary of Labor has found under 29 CFR Part 5.5(a)(l)(iv) that the wages of any laborer or mechanic include the amount of any costs reasonably anticipated in providing benefits under a plan or

program described in Section 1(b)(2)B of the Davis-Bacon Act, the Contractor shall maintain records which show that the commitment to provide such benefits is enforceable, that the plan or program is financially responsible, and that the plan or program has been communicated in writing to the laborers or mechanics affected, and records which show the costs anticipated or the actual costs incurred in providing such benefits. Contractors employing apprentices or trainees under approved programs shall maintain written evidence of the registration of apprenticeship programs and certification of trainee programs, the registration of the apprentices and trainees, and the ratios and wage rates prescribed in the applicable programs.

B. The Contractor shall submit weekly for each week in which Contract work is performed all payrolls to the District's System for receiving Certified Payroll Records. The payrolls submitted shall set out accurately and completely all of the information required to be maintained under Section 5.5(a)(3)(i) of 29 CFR Part 5. This information may be submitted in any form desired. Optional Form WH-347 is available for this purpose and may be purchased from the Superintendent of Documents (Federal Stock Number 029-005-0014-1), U.S. Government Printing Office, Washington, D.C. 20402. The prime contractor is responsible for the submission of copies of payrolls by all Subcontractors.

C. Each payroll submitted shall be accompanied by a "Statement of Compliance," signed by the Contractor or Subcontractor or his or her agent who pays or supervises the payment of the persons employed under the Contract and shall certify the following:

1. That the payroll for the payroll period contains the information required to be maintained under Section 5.5(a)(3)(i) of 29 CFR Part 5 and that such information is correct and complete.

2. That each laborer or mechanic (including each helper, apprentice, and trainee) employed on the Contract during the payroll period has been paid the full weekly wages earned, without rebate, either directly or indirectly, and that no deductions have been made either directly or indirectly from the full wages earned, other than permissible deductions as set forth in 29 CFR Part 3.

3. That each laborer or mechanic has been paid not less than the applicable wage rates and fringe benefits or cash equivalents for the classification of work performed, as specified in the applicable wage determination incorporated into the Contract.

D. The weekly submission of a properly executed certification set forth on the reverse side of Optional Form WH-347 shall satisfy the requirement for submission of the "Statement of Compliance" required by this Article.

E. The falsification of any of the above certifications may subject the Contractor or Subcontractor to civil or criminal prosecution under Section 1001 of Title 18 or Section 231 of Title 31 of the United States Code.

F. The Contractor or Subcontractor shall make the records required under Supplementary Conditions Article SC10.11.4A available for inspection, copying, or transcription by authorized representatives of DOT or the Department of Labor, and shall permit such representatives to interview employees during working hours on the job. If the Contractor or Subcontractor fails to submit the required records or to make them available, DOT may, after written notice to the Contractor, sponsor, applicant, or owner, take such action as may be necessary to cause the suspension of any further payment, advance, or guarantee of funds. Furthermore, failure to submit the required records upon request or to make such records available may be grounds for debarment action pursuant to 29 CFR Part 5.12.

SC10.11.5 Apprentices and Trainees

A. Apprentices. Apprentices will be permitted to work at less than the predetermined rate for the work they performed when they are employed and individually registered in a bona fide apprenticeship program registered with the U.S. Department of Labor, Employment and Training Administration, Bureau of Apprenticeship and Training, or with a

State Apprenticeship Agency recognized by the Bureau, or if a person is employed in the first ninety (90) Days of probationary employment as an apprentice in such an apprenticeship program, who is not individually registered in the program, but who has been certified by the Bureau of Apprenticeship and Training or a State Apprenticeship Agency (where appropriate) to be eligible for probationary employment as an apprentice. The allowable ratio of apprentices to journeymen on the Jobsite in any craft classification shall not be greater than the ratio permitted to the Contractor as to its entire work force under the registered program. Any worker listed on a payroll at an apprentice wage rate, who is not registered or otherwise employed as stated above, shall be paid not less than the applicable wage rate on the wage determination for the classification of work actually performed. In addition, any apprentice performing work on the Jobsite in excess of the ratio permitted under the registered program shall be paid not less than the applicable wage rate on the wage determination for the work actually performed. Where a Contractor is performing construction on a project in a locality other than that in which its program is registered, the ratios and wage rates (expressed in percentages of the journeyman's hourly rate) specified in the Contractor's or Subcontractor's registered program shall be observed. Every apprentice must be paid at not less than the rate specified in the registered program for the apprentice's level of progress, expressed as a percentage of the journeyman hourly rate specified in the applicable wage determination. Apprentices shall be paid fringe benefits in accordance with the provisions of the apprenticeship program. If the apprenticeship program does not specify fringe benefits, apprentices must be paid the full amount of fringe benefits listed on the wage determination for the applicable classification. If the Administrator determines that different practice prevails for the applicable apprentice classification, fringes shall be paid in accordance with that determination. In the event the Bureau of Apprenticeship and Training, or a State Apprenticeship Agency recognized by the Bureau, withdraws approval of an apprenticeship program, the Contractor will no longer be permitted to utilize apprentices at less than the applicable predetermined rate for the work performed until an acceptable program is approved.

B. Trainees. Except as provided in 29 CFR Part 5.16, trainees will not be permitted to work at less than the predetermined rate for the work performed unless they are employed pursuant to and individually registered in a program which has received prior approval, evidenced by formal certification, by the U.S. Department of Labor, Employment and Training Administration. The ratio of trainees to journeymen shall not be greater than permitted under the plan approved by the Employment and Training Administration. Every trainee must be paid at not less than the rate specified in the approved program for each trainee's level of progress expressed as a percentage of the journeyman hourly rate specified in the applicable wage determination. Trainees shall be paid fringe benefits in accordance with the provisions of the trainee program. If the trainee program does not mention fringe benefits, trainees shall be paid the full amount of fringe benefits listed on the wage determination unless the Administrator of the Wage and Hour Division determines that there is an apprenticeship program associated with the corresponding journeyman wage rate on the wage determination which provides for less than full fringe benefits for apprentices. Any employee listed on the payroll at a trainee rate who is not registered and participating in a training plan approved by the Employment and Training Administration shall be paid not less than the applicable wage rate on the wage determination for the classification of work that employee actually performed. In addition, any trainee performing work on the Jobsite in excess of the ratio permitted under the registered program shall be paid not less than the applicable wage rate on the wage determination for the work actually performed. In the event the Employment and Training Administration withdraws approval of a training program, the Contractor will no longer be permitted to utilize trainees at less than the applicable predetermined rate for the work performed until an acceptable program is approved.

C. Equal Employment Opportunity. The utilization of apprentices, trainees and journeymen shall be in conformity with the equal employment opportunity requirements of Executive Order No. 11246, as amended by Executive Order No. 11375, and 29 CFR Part 30.

SC10.11.6 Contract Work Hours and Safety Standards Act, as amended

The Contractor shall comply and assures compliance with Sections 102 and 107 of the Contract Work Hours and Safety Standards Act, as amended, 40 USC Sections 327 through 333; and implementing U.S. DOL regulations, "Labor Standards Provisions Applicable to Contracts Governing Federally Financed and Assisted Construction (also Labor Standards Provisions

Applicable to Nonconstruction Contracts Subject to the Contract Work Hours and Safety Standards Act)," 29 CFR Part 5, and U.S. DOL regulations, "Safety and Health Regulations for Construction," 29 CFR Part 1926. In addition to other requirements that may apply:

A. In accordance with Section 102 of the Contract Work Hours and Safety Standards Act, as amended, 40 USC Sections 327 through 332, the Contractor and its Subcontractors of every tier shall compute the wages of every mechanic and laborer on the basis of a standard work week of 40 hours, and that each worker will be compensated for work exceeding the standard work week at a rate of not less than 1.5 times the basic rate of pay for all hours worked in excess of 40 hours in the work week. The Contractor and its Subcontractors' determinations pertaining to these requirements shall be made in accordance with applicable U.S. DOL regulations, "Labor Standards Provisions Applicable to Contracts Governing Federally Financed and Assisted Construction (also Labor Standards Provisions Applicable to Nonconstruction Contracts Subject to the Contractor Work Hours and Safety Standards Act)," 29 CFR Part 5.

B. In accordance with Section 107 of the Contract Work Hours and Safety Standards Act, as amended, 40 USC Section 333, the Contractor and its Subcontractors shall not require any laborer or mechanic working on a construction contract to work in surroundings or under working conditions that are unsanitary, hazardous, or dangerous to his or her health and safety, as determined in accordance with U.S. DOL regulations, "Safety and Health Regulations for Construction," 29 CFR Part 1926.

SC10.11.7 Compliance with Copeland Act Requirements

The Contractor shall comply with the Copeland "Anti- Kickback" Act, 18 USC Section 874 and 40 USC Section 276c, and U.S. DOL regulations, "Contractors and Subcontractors Public Building or Public Work Financed in Whole or Part by Loans or Grants from the United States," 29 CFR Part 3. In addition to other requirements that may apply:

A. The Contractor shall not induce, by any means, any person employed in the construction completion, or repair of public work, to give up any part of the compensation to which that employee is otherwise entitled.

B. The Contractor shall report every suspected or reported violation of the Copeland "Anti-Kickback" Act or its Federal implementing regulations to the District and FTA.

SC10.11.8 Contract Termination: Debarment

A breach of the Contract clauses in 29 CFR Part 5.5 may be grounds for termination of the Contract and for debarment as a contractor and a Subcontractor as provided in 29 CFR Part 5.12.

SC10.11.9 Compliance with Davis-Bacon and Related Act Requirements

All rulings and interpretations of the Davis- Bacon and related acts contained in 29 CFR Parts 1, 3 and 5 are incorporated herein by reference.

SC10.11.10 Fair Labor Standards

The Contractor shall comply with the minimum wage and overtime provisions of the Fair Labor Standards Act, as amended, 29 USC Sections 206 and 207 which apply to employees performing work under the Contract.

SC10.11.11 Disputes Concerning Labor Standards

Disputes arising out of the labor standards provisions of this Contract shall not be subject to the general disputes clause of this Contract. Such disputes shall be resolved in accordance with the procedures of the U.S. Department of Labor set forth in 29 CFR Parts 5, 6 and 7. Disputes within the meaning of this clause include disputes between the Contractor (or any of its Subcontractors) and the District, the U.S. Department of Labor, or their employees or their representatives.

SC10.11.12 Certification of Eligibility

By entering into this Contract, the Contractor certifies that neither it (nor he or she) or any person or firm who has an interest in the Contractor's firm is a person or firm ineligible to be awarded government contracts by virtue of Section 3A of the Davis-Bacon Act or 29 CFR Part 5.12(a)(1).

A. No part of this Contract shall be subcontracted to any person or firm ineligible for award of a government contract by virtue of Section 3(a) of the Davis-Bacon Act or 29 CFR Part 5.12(a)(1).

B. The penalty for making false statements is prescribed in the U.S. Criminal Code, 18 USC Section 1001.

SC10.11.13 Overtime Requirements

No Contractor or Subcontractor contracting for any part of the Contract work which may require or involve the employment of laborers or mechanics shall require or permit any laborer or mechanic in any workweek in which he or she is employed on such work to work in excess of forty hours in such workweek unless such laborer or mechanic receives compensation at a rate not less than one and one-half times that individual's basic rate of pay for all hours worked in excess of forty hours in such workweek.

SC10.11.14 Violation: Liability for Unpaid Wages; Liquidated Damages

In the event of any violation of the clause set forth in Paragraph (b)(1) of 29 CFR Part 5.5, the Contractor and any Subcontractor responsible therefor shall be liable to any affected employee for unpaid wages. In addition, such Contractor and Subcontractor shall be liable to the United States for liquidated damages. Such liquidated damages shall be computed with respect to each individual laborer or mechanic employed in violation of the clause set forth in Paragraph (b)(1) of 29 CFR Part 5.5, in the sum of $10 for each calendar day on which such employee was required or permitted to work in excess of the standard workweek of forty hours without payment of the overtime wages required by the clause set forth in Paragraph (b)(1) of 29 CFR Part 5.5.

SC10.11.15 Withholding for Unpaid Wages and Liquidated Damages

DOT or the District shall upon its own action or upon written request of an authorized representative of the Department of Labor, withhold or cause to be withheld, from any monies payable on account of work performed by the Contractor or Subcontractor under any such contract or any other Federal contract with the same prime contractor, or any other Federally assisted contract subject to the Contract Work Hours and Safety Standards Act, which is held by the same prime contractor, such sums as may be determined to be necessary to satisfy any liabilities of such Contractor or Subcontractor for unpaid wages and liquidated damages as provided in the clause set forth in Paragraph (b)(2) of 29 CFR Part 5.5.

SC10.11.16 Notice to the District of Labor Disputes

Whenever the Contractor has acknowledged that any actual or potential labor dispute is delaying or threatens to delay the timely performance of this Contract, the Contractor shall immediately give notice thereof, including all relevant information with respect thereto, to the District's Representative.

SC10.12 Subcontracts

A Contractor or Subcontractor shall insert in any Subcontracts the clauses set forth in Supplementary Conditions Articles SC10.11.1 through SC10.11.16 and also a clause requiring the Subcontractors to include these clausesin any lower tier Subcontracts. The prime Contractor shall be responsible for compliance by any Subcontractor or lower tier Subcontractor with the clauses set forth in Supplementary Conditions Articles SC10.11.1 through SC10.11.16.

SC10.13 How Contract Affected by Provisions Held Invalid

If any provision of this Contract is held invalid, the remainder of this Contract shall not be affected thereby if such remainder would then continue to conform to the terms and requirements of applicable law.

SC10.14 Reporting, Record Retention and Access

Contractor shall comply with the following requirements:

A. Record Retention. Contractor shall, during the course of the Contract and three years after final payment, maintain intact and readily accessible all data, documents, reports, records, Contracts, and supporting materials relating to the Contract as the District may require.

B. Access to Records. Contractor shall permit the District, the Secretary of Transportation, and the Comptroller of the United States or their authorized representatives, to inspect all Contract work, materials, payrolls, and other data, and to audit the books, records and accounts of Contractor and its Subcontractors pertaining to the Contract. In accordance with 49 USC § 5325(a), Contractor shall require each Subcontractor to permit the District, the Secretary of Transportation and Comptroller General of the United States, or their duly authorized representatives, to inspect all work, materials, payrolls, and other data and records involving that Subcontract and

to audit the books, records, and accounts involving that Subcontract as it affects the Contract.

SC10.15 Debarment and Suspension

Contractor shall comply with the following requirements:

A. Contractor shall comply with the requirements of Executive Orders Nos. 12549 and 12689, "Debarment and Suspension," 31 USC § 6101 note; and U.S. DOT regulations on Debarment and Suspension at 2 CFR Part 180 and 2 CFR Part 1200.

B. Contractor shall refrain from entering into any Subcontract of any amount with a party included in the "U.S. General Services Administration's (U.S. GSA) list of Parties Excluded from Federal Procurement or Nonprocurement Programs," implementing Executive Orders Nos. 12549 and 12689, "Debarment and Suspension" and 2 CFR Part 180. The list also includes the names of parties debarred, suspended, or otherwise excluded by agencies, and contractors declared ineligible for Contract award under statutory or regulatory authority other than Executive Order Nos. 12549 and 12689.

C. Before entering into any Subcontract, Contractor shall obtain a debarment and suspension certification from each prospective Subcontractor containing information about the debarment and suspension status and other specific information about the Subcontractor and its "principals," as defined at 2 CFR Part 180.995.

D. Contractor shall require each Subcontractor to refrain from awarding any Subcontract of any amount (at any tier) to a debarred or suspended Subcontractor, and to obtain a similar certification from any Subcontractor (at any tier) seeking a Subcontract exceeding $100,000.

SC10.16 Buy America

Contractor shall comply with 49 USC § 5323(j), FTA's "Buy America" regulations at 49 CFR Part 661, and any amendments thereto, and any implementing guidance issued by FTA.

SC10.17 Fly America

Contractor shall comply with 49 USC 40118 (the "Fly America" Act) in accordance with the General Services Administration's regulations at 41 CFR Part 301-10, which provide that recipients and subrecipients of Federal funds and their contractors are required to use U.S. flag air carriers for U.S. Government-financed international air travel and transportation of their personal effects or property, to the extent such service is available, unless travel by foreign air carrier is a matter of necessity, as defined by the Fly America Act. The Contractor shall submit, if a foreign air carrier was used, an appropriate certification or memorandum adequately explaining why service by a U.S. flag air carrier was not available or why it was necessary to use a foreign air carrier and shall, in any event, provide a certificate of compliance with the Fly America requirements. The Contractor agrees to include the requirements of this Article in all Subcontracts that may involve international air transportation.

SC10.18 Environmental Protection

Contractor shall comply with the following requirements:

A. Contractor shall comply with all applicable requirements of the National Environmental Policy Act of 1969, as amended, 42 USC §§ 4321 et seq. consistent with Executive Order No. 11514, as amended, "Protection and Enhancement of Environmental Quality"; FTA statutory requirements on environmental matters at 49 USC § 5324(b); Council on Environmental Quality regulations on compliance with the National Environmental Policy Act of 1969, as amended, 40 CFR Part 1500 et seq.; and joint FHWA/FTA regulations, "Environmental Impact and Related Procedures," 23 CFR Part 771 and 49 CFR Part 622.

B. Contractor shall report and require each Subcontractor at any tier to report any violation of these requirements resulting from any Contract activity of Contractor or Subcontractor to FTA and the appropriate U.S. EPA Regional Office.

SC 10.18.1 Procurement of Recovered Materials

Contractors must comply with Section 6002 of the Solid Waste Disposal Act, as amended by the Resource Conservation and Recovery Act. The requirements of Section 6002 include procuring only items designated in guidelines of the Environmental Protection Agency (EPA) at 40 CFR Part 247 that contain the highest percentage of recovered materials practicable, consistent with maintaining a satisfactory level of competition, where the purchase price of the item exceeds $10,000 or the value of the quantity acquired during the preceding fiscal year exceeded $10,000; procuring solid waste management services in a manner that maximizes energy and resource recovery; and establishing an affirmative procurement program for procurement of recovered materials identified in the EPA guidelines.

SC10.19 Air Quality

Contractor shall comply with the following requirements:

A. Contractor shall comply with all applicable standards, orders or regulations issued pursuant to the Clean Air Act, as amended, 42 USC §§ 7401 et seq. Specifically:

   1. Contractor shall comply with applicable requirements of U.S. EPA regulations, "Conformity to State or Federal Implementation Plans of Transportation Plans, Programs, and Projects Developed, Funded or Approved Under Title 23 USC or the Federal Transit Law," 40 CFR Part 51, Subpart T; and "Determining Conformity of Federal Actions to State or Federal Implementation Plans," 40 CFR Part 93.

B. Contractor shall report and require each Subcontractor at any tier to report any violation of these requirements resulting from any Contract activity of Contractor or Subcontractor to FTA and the appropriate U.S. EPA Regional Office.

SC10.20 Clean Water

Contractor shall comply with the following requirements:

A. Contractor shall comply with all applicable standards, orders, or regulations issued pursuant to the Federal Water Pollution Control Act, as amended, 33 USC §§ 1251 et seq.

B. Contractor shall report and require each Subcontractor at any tier to report any violation of these requirements resulting from any Contract activity of any Subcontractor or itself to FTA and appropriate U.S. EPA Regional Office.

SC10.21 Disadvantaged Business Enterprise and Small Business Entity

Contractor shall take the following measures to facilitate participation by DBEs and SBEs in the Contract:

A. Contractor shall comply with current U.S. DOT regulations on DBE and SBE participation in U.S. DOT financial assistance programs, at 49 CFR Part 26. Contractor shall take all necessary and reasonable steps required by U.S. DOT regulations to ensure that eligible DBEs and SBEs have an equal opportunity to compete for and participate in Subcontracts financed with Federal assistance awarded by U.S. DOT.

B. The Contractor and its Subcontractors shall not discriminate on the basis of race, color, national origin, or sex in the performance of the Contract. The Contractor and its Subcontractors shall comply with the applicable requirements of 49 CFR part 26 in the performance of the Contract. Failure to comply with these requirements by the Contractor is a material breach of the Contract and may be subject to sanctions, including termination of the Contract, as appropriate.

C. Contractor must promptly pay Subcontractors for satisfactory performance of their Subcontracts.

SC10.22 Cargo Preference - Use of United States Flag Vessels

Contractor shall comply with U.S. Maritime Administration regulations, "Cargo Preference - U.S. Flag Vessels," 46 CFR Part 381 to the extent those regulations apply to this Contract. Contractor shall include the clauses required by those regulations,

modified as necessary to identify the affected parties in each Subcontract or subagreement involving equipment, materials, or commodities suitable for transport by ocean vessel.

SC10.23 Patent Rights

If any invention, improvement or discovery of the Contractor is conceived or first actually reduced to practice in the course of or under this Contract, which invention, improvement or discovery is patentable under the laws of the United States of America or any foreign country, the Contractor shall notify the District and the Government (FTA) immediately and provide a detailed report and shall require its Subcontractors to notify the District and the Government immediately and provide a detailed report. The rights and responsibilities of the District, the Contractor, and the Government with respect to such invention, improvement or discovery will be determined in accordance with applicable Federal laws, regulations, policies, and any waivers thereof. Unless the Government later makes a contrary determination in writing, the Contractor and its Subcontractors of any tier shall transmit to the FTA those rights due the Government in any invention resulting from this Contract and as further described in U.S. Department of Commerce regulations, "Rights to Inventions Made by Nonprofit Organizations and Small Business Firms Under Government Grants, Contracts, and Cooperative Agreements," 37 CFR Part 401.

SC10.24 Rights in Data and Copyrights

A. The term "subject data" used in this Supplementary Conditions Article SC10.24A. means recorded information, whether or not copyrighted, that is delivered or specified to be delivered under this Contract. The term includes graphic or pictorial delineation in media such as drawings, or photographs; text in specifications or related performance or design-type documents; machine forms such as punched cards, magnetic tape, or computer memory printouts; and information retained in computer memory. Examples include, but are not limited to: computer software, engineering drawings and associated lists, specifications, standards, process sheets, manuals, technical reports, catalog item identifications, and related information. The term does not include financial reports, cost analyses, and similar information incidental to Project Administration.

B. Federal Restrictions: The following restrictions apply to all subject data first produced in the performance of this Contract:

   1. Except for its own internal use, the Contractor may not publish or reproduce subject data in whole or in part, or in any manner or form, nor may the Contractor authorize others to do so, without the written consent of the Government, until such time as the Government may have either released or approve the release of such data to the public.

C. Federal Rights in Data and Copyrights: In accordance with 2 CFR Part 200.315, the Government reserves a royalty-free, non-exclusive and irrevocable license to produce, publish or otherwise use, and to authorize others to use, for Federal Government purposes:

   1. Any subject data developed under the grant, or under cooperative agreement, or under a third party Contract or Subcontract, irrespective of whether or not a copyright has been obtained; and

   2. Any rights of copyright to which Contractor purchases ownership with Federal assistance.

D. Special Federal Rights for Planning, Research and Development Projects: Contractor understands and agrees that, in addition to the rights set forth in supplementary Conditions Article SC10.24C. herein, FTA may make available to any FTA recipient, subrecipient, third party contractor, or third party Subcontractor, either FTA's license in the copyright to the subject data derived under this Contract or a copy of the subject data first produced under this Contract. In the event that the Contract is not completed for any reason whatsoever, all data developed under the Contract shall become subject data as defined in Supplementary Conditions Article SC10.24A. herein and shall be delivered as the District or Government may direct. This Supplementary Conditions Article SC10.24D., however, does not apply to adaptations of automatic data processing equipment or programs for the Contractor's use.

E. Hold Harmless: Unless prohibited by State law, the Contractor agrees to indemnify, save and hold harmless the District, the Government, its officers, agents, and employees acting within the scope of their official duties against any liability, including costs and expenses, resulting from any willful or intentional violation by the Contractor of proprietary rights, copyrights, or right of privacy, arising out of the publication, translation, reproduction, delivery, use, or disposition of any data furnished under this Contract. The Contractor shall not be required to indemnify the Government for any such liability arising out of the wrongful acts of employees or agents of the Government.

F. Restriction on Access to Patent Rights: Nothing contained in this Supplementary Conditions Article SC10.24F on rights in data shall imply a license to the Government under any patent or be construed as affecting the scope of any license or other right otherwise granted to the Government under any patent.

G. Application to Material Incorporated into the Contract: The requirements of Supplementary Conditions Articles SC10.24B., C. and D. herein do not apply to material furnished to the Contractor by the Government and incorporated in the Work carried out under the Contract; provided that such incorporated material is identified by the Contractor at the time of delivery of such Work.

SC10.25 Certification Regarding Lobbying

This Contract is subject to the requirements of 31 USC Section 1352, as amended by the Lobbying Disclosure Act of 1995, P.L. 104-65 (to be codified at 2 USC Section 1601, et seq.) and U.S. DOT Regulations "New Restrictions on Lobbying" 49 CFR Part 20. Contractor shall require that the "Certification Regarding Lobbying" set out in Appendix A to those Regulations and in the Proposal Form be executed by its Subcontractors or subsuppliers of any tier receiving an amount in excess of $100,000 under this Contract and shall require such Subcontractors and subsuppliers to forward such certifications to Contractor, and Contractor shall forward such certifications and any disclosure forms to the District. Contractor and each Subcontractor of any tier certifies that it will not or has not used Federal appropriated funds to pay any person or organization for influencing or attempting to influence an officer or employee of any Federal department or agency, a member of Congress, an officer or employee of Congress or an employee of a member of Congress in connection with obtaining any Federal Contract, grant or any other award covered by 31 USC Section 1352. Contractor and Subcontractors shall disclose the name of any registrant under the Lobbying Disclosure Act of 1995 who has made lobbying contacts on its behalf with non-Federal funds with respect to that Federal Contract, grant or award covered by 31 USC Section 1352. Such disclosures shall be forwarded from tier to tier to the District.

SC10.26 Energy Conservation

The Contractor and its Subcontractors shall comply with mandatory energy efficiency standards and policies within the applicable State energy conservation plans issued in compliance with the Energy Policy and Conservation Act, 42 USC Section 6321 et seq.

SC10.27 Americans with Disabilities Act

The Contractor and any of its Subcontractors under this Contract agree to comply with all applicable requirements of the Americans with Disabilities Act of 1990 (ADA), 42 USC §§ 12101 et seq.; Section 504 of the Rehabilitation Act of 1973, as amended, 29 USC § 794; 49 USC § 5301(d); and the following regulations and any amendments thereto:

A. U.S. DOT regulations, "Transportation Services for Individuals with Disabilities (ADA)," 49 CFR Part 37;

B. U.S. DOT regulations, "Nondiscrimination on the Basis of Handicap in Programs and Activities Receiving or Benefiting from Federal Financial Assistance," 49 CFR Part 27;

C. Joint U.S. Architectural and Transportation Barriers Compliance Board (U.S. ATBCB)/U.S. DOT regulations, "Americans With Disabilities (ADA) Accessibility Specifications for Transportation Vehicles," 36 CFR Part 1192 and 49 CFR Part 38;

D. U.S. Department of Justice (DOJ) regulations, "Nondiscrimination on the Basis of Disability in State and Local Government Services," 28 CFR Part 35;

E. U.S. DOJ regulations, "Nondiscrimination on the Basis of Disability by Public Accommodations and in Commercial Facilities," 28 CFR Part 36;

F. U.S. General Services Administration regulations, "Accommodations for the Physically Handicapped," 41 CFR Subpart 101-19;

G. U.S. Equal Employment Opportunity Commission, "Regulations to Implement the Equal Employment Provisions of the Americans with Disabilities Act," 29 CFR Part 1630;

H. U.S. Federal Communications Commission regulations, "Telecommunications Relay Services and Related Customer Premises Equipment for Persons with Disabilities," 47 CFR Part 64, Subpart F;

I. U.S. FTA regulations, "Transportation for Elderly and Handicapped Persons," 49 CFR Part 609.

J. U.S. ATBCB regulations, “Electronic and Information Technology Accessibility Standards,” 36 CFR Part 1194; and

K. Any implementing requirements FTA may issue.

SC10.28 Preference for Recycled Products

To the extent practicable and economically feasible, Contractor shall use recycled products pursuant to U.S. Environmental Protection Agency (U.S. EPA) guidelines at 40 CFR Parts 247-253, which implement Section 6002 of the Resource Conservation and Recovery Act, as amended, 42 USC § 6962.

SC10.29 Equal Employment Opportunity

It has been and is the policy and goal of the District to build and maintain a staff representative of all the residents of its service area, including minority, female and disadvantaged persons, and to continue to ensure that all applicants shall be employed, and all employees shall be treated during employment, without regard to their race, color, religion, sex, or national origin. Further, it is the policy of the District to actively pursue a program of providing equal employment opportunity under its construction contracts as well as its own employment practices. Accordingly, Contractor shall comply with the following equal employment opportunity (EEO) requirements:

A. General Requirements. Contractor shall not discriminate against any employee or applicant for employment because of race, color, creed, sex, disability, age, or national origin. Contractor shall take affirmative action to ensure that applicants are employed and that employees are treated during employment, without regard to their race, color, creed, sex, disability, age, or national origin. Such action shall include, but not limited to, the following: employment, upgrading, demotion or transfer, recruitment or recruitment advertising, layoff or termination; rates of pay or other forms of compensation; and selection for training, including apprenticeship. Contractor shall also comply with any implementing requirements FTA may issue.

SC10.30 Civil Rights

Contractor shall comply with the following requirements:

A. Compliance with Regulations. Contractor shall comply and assure compliance by its Subcontractors of any tier with all of the requirements of Title VI of the Civil Rights Act of 1964, as amended, 42 USC § 2000d et seq., 49 USC § 5332, and with the Regulations relative to nondiscrimination in Federally-assisted programs of the United States Department of Transportation (hereinafter called "DOT") Title 49, Code of Federal Regulations, Part 21, as they may be amended from time to time (hereinafter referred to as "Regulations"), which are herein incorporated by reference and made a part of this Agreement.

B. Nondiscrimination. Contractor, with regard to the work performed by it during this Contract, shall not discriminate on the grounds of race, color, sex or national origin in the selection and retention of Subcontractors, including procurement of materials and leases of equipment. Contractor shall not participate either directly or indirectly in the discrimination prohibited by 49 CFR Part 21.

C. Solicitations for Subcontracts, Including Procurement of Materials and Equipment. In all solicitations either by competitive Bidding or negotiation made by Contractor for work to be performed under a Subcontract, including procurement of materials or leases of equipment, each potential Subcontractor or supplier shall be notified by Contractor of Contractor's obligations under this Contract and the Regulations relative to nondiscrimination on the grounds of race, color, sex or national origin.

D. Information and Reports. Contractor shall provide all information and reports required by the Regulations or directives issued pursuant thereto, and shall permit access to its books, records, accounts, other sources of information, and its facilities as may be determined by the District or the FTA to be pertinent to ascertain compliance with such Regulations, orders and instructions. Where any information required of Contractor is in the exclusive possession of another who fails or refuses to furnish this information, Contractor shall so certify to the District, or FTA, as appropriate, and shall set forth what efforts it has made to obtain the information.

E. Sanctions for Noncompliance. In the event of Contractor's noncompliance with the nondiscrimination

provisions of this Contract, the District shall impose such Contract sanctions as it or FTA may determine to be appropriate, including, but not limited to:

1. Withholding of payments to Contractor under the Contract until Contractor complies, and/or

2. Cancellation, termination or suspension of the Contract, in whole or in part.

F. Incorporation of Provisions. Contractor shall include the provisions of Supplementary Conditions Articles SC10.30A. through SC10.30G. herein in every Subcontract, including procurement of materials and leases of equipment, unless exempt by the Regulations, or directives issued pursuant thereto. Contractor shall take such action with respect to any Subcontract or procurement as the District or FTA may direct as a means of enforcing such provisions including sanctions for noncompliance, provided, however, that, in the event Contractor becomes involved in, or is threatened with, litigation with a Subcontractor or supplier as result of such direction, Contractor may request the District to enter into such litigation to protect the interests of the District and, in addition, Contractor may request the United States to enter into such litigation to protect the interests of the United States.

SC10.31 Seismic Safety

Contractor shall comply with the requirements of U.S. DOT regulations applicable to seismic safety requirements for U.S. DOT assisted construction projects at 49 CFR Part 41 (specifically, 49 CFR Part 41.117), and any implementing guidance FTA may issue, to the acquisition or construction of any new building and to additions to any existing building.

SC10.32 Metric System

To the extent required by U.S. DOT or FTA, Contractor shall use the metric system of measurement in its Contract, as may be required by 15 USC §§ 205a et seq.; Executive Order No. 12770, "Metric Usage in Federal Government Programs," 15 USC § 205a note; and other regulations, guidelines, and policies issued by U.S. DOT or FTA. To the extent practicable and feasible, the Contractor shall accept products and services with dimensions expressed in the metric system of measurement unless otherwise directed to by the District, subject to compliance with Supplementary Conditions Article SC5.9 and SC5.10.

SC10.33 Privacy

A. Contractor shall comply with, and assures the compliance of its employees with, the information restrictions and other applicable requirements of the Privacy Act of 1974, 5 USC § 552a. Among other things, Contractor agrees to obtain the express consent of the Federal Government before Contractor or its employees operate a system of records on behalf of the Federal Government. Contractor understands that the requirements of the Privacy Act, including the civil and criminal penalties for violation of that Act, apply to those individuals involved, and that failure to comply with the terms of the Privacy Act may result in termination of the underlying Contract.

B. Contractor shall also include these requirements in each Subcontract to administer any system of records on behalf of the Federal Government financed in whole or in part with Federal assistance provided by FTA.

SC10.34 Veterans Employment

To the extent practicable, Contractor shall give a hiring preference to veterans (as defined in 5 USC Section 2108) who have the requisite skills and abilities to perform the construction work required under the Contract. This preference shall not be understood, construed or enforced in any manner that would require an employer to give a preference to any veteran over any equally qualified applicant who is a member of any racial or ethnic minority, female, an individual with a disability, or a former employee.

SC10.35 Prohibition on Certain Telecommunications and Video Surveillance Services or Equipment

(a) Contractor or its subcontractors are prohibited from:

(1) Procuring or obtaining;

(2) Entering into a contract (or extending or renewing a contract) to procure or obtain equipment, services, or systems that uses covered telecommunications equipment or services as a substantial or essential component of any system, or as critical technology as part of any system.

(b) As described in Public Law 115-232, section 889, 'covered telecommunications equipment or services' means any of the following:

(i) Telecommunications equipment produced by Huawei Technologies Company or ZTE Corporation (or any subsidiary or affiliate of such entities

(ii) For the purpose of public safety, security of government facilities, physical security surveillance of critical infrastructure, and other national security purposes, video surveillance and telecommunications equipment produced by Hytera Communications Corporation, Hangzhou Hikvision Digital Technology Company, or Dahua Technology Company (or any subsidiary or affiliate of such entities).

(ii) Telecommunications or video surveillance services provided by the aforementioned entities or using such equipment.

(iv) Telecommunications or video surveillance equipment or services produced or provided by an entity that the Secretary of Defense, in consultation with the Director of the National Intelligence or the Director of the Federal Bureau of Investigation, reasonably believes to be an entity owned or controlled by, or otherwise connected to, the government of a covered foreign country.

SC10.36 Seat Belt Use.

Pursuant to Executive Order No. 13043, “Increasing Seat Belt Use in the United States,” April 16, 1997, 23 U.S.C. § 402 note, (62 Fed. Reg. 19217), the Contractor, and its subcontractors and subsuppliers, shall adopt and promote on-the-job seat belt use policies and programs for its employees and other personnel that operate company-owned vehicles, company-rented vehicles, or personally operated vehicles, and shall include a “Seat Belt Use” provision in each subcontract related to this Contract.

SC10.37 Distracted Driving, Including Text Messaging While Driving.

Pursuant to Executive Order No. 13513, “Federal Leadership on Reducing Text Messaging While Driving,” October 1, 2009, 23 U.S.C. § 402 note, (74 Fed. Reg. 51225) and U.S. DOT Order 3902.10, “Text Messaging While Driving,” December 30, 2009:

(1) The Contractor, and its subcontractors and subsuppliers, agree to adopt and enforce workplace safety policies to decrease crashes caused by distracted drivers, including policies to ban text messaging while using an electronic device supplied by a Contractor, its subcontractors or subsuppliers, and driving a vehicle the driver owns or rents, a vehicle Contractor, or its subcontractors and suppliers, owns, leases, or rents, or a privately-owned vehicle when on official business in connection with the Contract, or when performing any work pursuant to the Contract;

(2) The Contractor, and its subcontractors and subsuppliers, agree to conduct workplace safety initiatives in a manner commensurate with its size, such as establishing new rules and programs to prohibit text messaging while driving, re-evaluating the existing programs to prohibit text messaging while driving, and providing education, awareness, and other outreach to employees about the safety risks associated with texting while driving.

SC10.38 Federal Tax Liability and Recent Felony Convictions

Pursuant to Federal law, if Contractor is a private corporation, partnership, trust, joint-stock company, sole proprietorship, or any other business association, Contractor has certified that: 1) It has no unpaid Federal tax liability that has been assessed, for which all judicial and administrative remedies have been exhausted or have lapsed, and that is not being paid in a timely manner pursuant to an agreement with the authority responsible for collecting the tax liability; and 2) It has not been convicted of a felony criminal violation under any Federal law within the preceding 24 months. Contractor shall require that the language of this certification be included in all contracts with subcontractors and subsuppliers at all tiers, and that all subcontractors and subsuppliers shall certify and disclose accordingly.

SC10.39 Trafficking In Persons

In compliance with Section 106(g) of the Trafficking Victims Protection Act of 2000 (TVPA), as amended, 22 U.S.C. § 7104(g), Contractor, its employees, its subcontractors and its employees that participate in this Contract shall not:

(A) Engage in severe forms of trafficking in persons during the period of time that the Contractor's Contract is in effect;

(B) Procure a commercial sex act during the period of time that the Contract or subcontract is in effect; or

(C) Use forced labor in the performance of the Contract or subcontract.

SC10.40 Alcohol Misuse and Prohibited Drug Use.

The Contractor agrees to comply with:

(i) Federal transit laws, specifically 49 U.S.C. § 5331;

(ii) FTA regulations, "Prevention of Alcohol Misuse and Prohibited Drug Use in Transit Operations," 49 CFR Part 655; and

(iii) Applicable provisions of U.S. DOT regulations, "Procedures for Transportation Workplace Drug and Alcohol Testing Programs," 49 CFR Part 40.

SC10.41 Motor Carrier Safety

(a) *Financial Responsibility*. The Contractor agrees to comply with the economic and insurance registration requirements of the following:

(1) U.S. Federal Motor Carrier Safety Administration (U.S. FMCSA) regulations, "Minimum Levels of Financial Responsibility for Motor Carriers," 49 CFR Part 387, if it is engaged in operations requiring compliance with 49 CFR Part 387, it is engaged in interstate commerce, and it is not within a defined commercial zone; and

(2) The provisions of 49 U.S.C. § 31138(e)(4), which supersede inconsistent provisions of 49 CFR Part 387, and reduce the amount of insurance the Contractor must obtain to the highest amount required by any state in which the public transportation provider operates, if it operates within a public transportation service area located in more than one state, and receives federal assistance under 49 U.S.C. §§ 5307, 5310, and 5311.

(b) *U.S. FMCSA Requirements*. The Contractor agrees to comply with:

(1) The safety requirements of U.S. FMCSA regulations, "Federal Motor Carrier Safety Regulations," 49 CFR Parts 390 – 397, to the extent applicable; and

(2) The driver's license requirements of U.S. FMCSA regulations, "Commercial Driver's License Standards, Requirements, and Penalties," 49 CFR Part 383, and "State Compliance with Commercial Driver's License," 49

CFR Part 384, to the extent applicable, with the substance abuse requirements and guidance of U.S. FMCSA's regulations, "Controlled Substances and Alcohol.

END OF SUPPLEMENTARY CONDITIONS

CONTRACT SPECIFICATIONS

THE FOLLOWING CONTRACT SPECIFICATIONS INVOKE, MODIFY, AND SUPPLEMENT THE "BART FACILITIES STANDARDS, STANDARD SPECIFICATIONS, RELEASE – R3.1.2 DATED APRIL 2018 ”

THE ORGANIZATION AND SEQUENCE OF ARTICLES AND SUBARTICLES IN THESE CONTRACT SPECIFICATIONS SECTIONS ARE ALIGNED WITH LIKE IDENTIFIED ARTICLES AND SUBARTICLES CONTAINED IN THE REFERENCED STANDARD SPECIFICATIONS SECTIONS.

ACCORDINGLY, ARTICLE(S) IN THESE CONTRACT SPECIFICATIONS WHICH SPECIFY MODIFICATIONS SHALL BE UNDERSTOOD TO MEAN MODIFICATIONS TO THE PROVISIONS CONTAINED IN LIKE NUMBERED AND TITLED ARTICLES IN THE REFERENCED STANDARD SPECIFICATIONS SECTIONS.

This Page Intentionally Left Blank

CONTRACT NO. 15NL-140

FOR CONSTRUCTION OF
COLISEUM STATION ELEVATOR MODERNIZATION

THE CONTRACT SPECIFICATIONS CONTAINED HEREIN HAVE BEEN PREPARED UNDER THE DIRECTION OF THE FOLLOWING LICENSED FIRMS AND INDIVIDUALS:

PGH Wong Engineering, Inc.: 182 Second Street, Suite 500, San Francisco, CA 94105

FW Associates, Inc.: 68 12th Street, San Francisco, CA 94103

GFT Infrastructure, Inc.: 3838 N. Central Avenue, Suite 1900, Phoenix, AZ 85012

Architectural

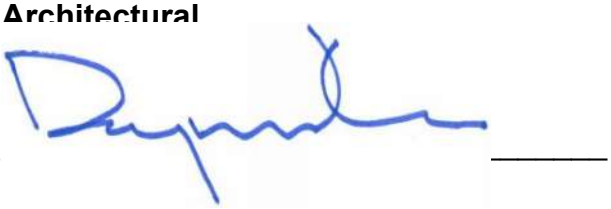

PGH Wong Engineering, Inc.



Mechanical/ Plumbing/ Fire

Richard H. Wells

Richard Wells, P.E.
PGH Wong Engineering, Inc



Electrical/ Communications Systems

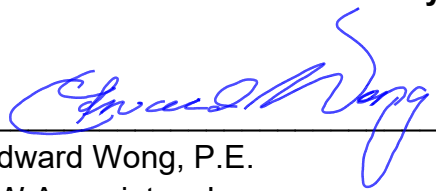

Edward Wong, P.E.
FW Associates, Inc.



Elevator

Aaron Krebs

Aaron C. Krebs, P.E., S.E.
GFT Infrastructure, Inc.



END OF SEAL PAGES

This Page Intentionally Left Blank

CONTRACT SPECIFICATIONS

TABLE OF CONTENTS

DIVISION 1 – GENERAL REQUIREMENTS

Section	Title
01 11 00	Summary of Work
01 20 00	Price and Payment Procedures
01 31 19	Project Meetings
01 32 16	Construction Progress Schedule
01 32 33	Photographic Documentation
01 33 00	Submittal Procedures
01 33 23	Shop Drawings, Product Data and Samples
01 35 14	Operating System Interface
01 35 24	Construction Safety
01 35 33	Security Procedures
01 35 54	Identification and Security
01 42 19	Reference Standards
01 43 00	Quality Assurance
01 43 38	Field Samples and Mock-Ups
01 45 00	Quality Control
01 45 24	Testing Program Requirements
01 51 00	Temporary Utilities
01 52 00	Construction Facilities
01 57 00	Temporary Controls
01 58 00	Project Identification
01 60 00	Product Requirements
01 71 13	Mobilization
01 71 23	Field Engineering
01 74 14	Cleaning
01 74 21	Waste Management
01 77 00	Closeout Procedures
01 78 23	Operation and Maintenance Data
01 78 39	Project Record Documents
01 78 44	Spare Parts and Maintenance Materials
01 79 00	Demonstration and Training
01 81 13	Sustainability Requirements

DIVISION 2 – EXISTING CONDITIONS

Section	Title
02 41 19	Selective Structure Demolition

DIVISION 3 – CONCRETE

Section	Title
03 05 15	Portland Cement Concrete
03 11 00	Concrete Forming
03 11 14	Falsework
03 15 00	Concrete Accessories
03 20 00	Concrete Reinforcing
03 30 00	Cast-In-Place Concrete
03 35 00	Concrete Finishing
03 61 11	Non-Shrink Grout

DIVISION 5 – METALS

Section	Title
05 05 22	Metal Welding
05 12 00	Structural Steel Framing
05 40 00	Cold-Formed Metal Framing
05 50 00	Metal Fabrications

DIVISION 6 – WOOD, PLASTICS AND COMPOSITES

Section	Title
06 10 00	Rough Carpentry

DIVISION 7 – THERMAL AND MOISTURE PROTECTION

Section	Title
07 60 00	Flashing and Sheet Metal
07 84 00	Firestopping
07 90 00	Joint Protection

DIVISION 8 – OPENINGS

Section	Title
08 11 00	Metal Doors and Frames
08 71 00	Door Hardware

DIVISION 9 – FINISHES

Section	Title
09 29 00	Gypsum Board
09 67 23	Resinous Flooring
09 67 70	Elevator Spray-On Flooring
09 91 00	Painting

DIVISION 10 – SPECIALTIES

Section	Title
10 14 00	Signage
10 40 00	Safety Specialties

DIVISION 14 - CONVEYING EQUIPMENT

Section	Title
14 24 00	Hydraulic Elevator

DIVISION 20 - FACILITY SERVICES

Section	Title
20 07 13	Plumbing and HVAC Insulation
20 10 13	Common Materials and Methods for Facility Services Fire Suppression, Plumbing and HVAC
20 20 13	Pipe Sleeves, Supports, and Anchors for Facility Services
20 30 13	Vibration Isolation and Seismic Control for Facilities Services
20 40 13	Identification for Facility Services
20 50 13	Raceways for Facility Services
20 70 13	Common Materials and Methods for Electronic Services
20 70 19	Indoor Cabinets, Racks, Frames and Enclosures
20 70 23	Electronic Circuits, Wires and Cables
20 70 26	Common Materials and Methods for Electrical Systems

20 72 25 Factory and Field Testing
20 80 00 Systems Integration Testing

DIVISION 21 - FIRE SUPPRESSION

Section	Title
21 13 13	Wet-Pipe Sprinkler System

DIVISION 22 - PLUMBING

Section	Title
22 11 01	Water Distribution
22 13 01	Sanitary Sewerage
22 14 29	Sump Pumps
22 40 00	Plumbing Fixtures

DIVISION 23 - HEATING VENTILATING AND AIR CONDITIONING

Section	Title
23 05 93	Testing, Adjusting and Balancing for HVAC
23 09 00	Instrumentation and Control for HVAC
23 23 00	Refrigerant Piping
23 31 00	HVAC Ducts and Casings
23 34 00	HVAC Fans
23 81 00	Unitary HVAC Equipment

DIVISION 26 - ELECTRICAL

Section	Title
26 05 17	Dry Type Transformers
26 05 24	Low Voltage Wires and Cables
26 05 26	Grounding and Bonding for Electrical Systems
26 05 70	Electrical Cabinets and Enclosures
26 24 22	Motor Starters and Contactors
26 24 24	Circuit Breakers and Panelboards
26 50 00	Lighting

DIVISION 27 - COMMUNICATIONS

Section	Title
27 13 01	Communication Cables and Related Equipment
27 30 01	Telephone Systems
27 60 00	Supervisory Control and Data Acquisition (SCADA) System

DIVISION 28 - ELECTRONIC SAFETY AND SECURITY

Section	Title
28 31 00	Fire Detection and Alarm System
28 41 29	Closed Circuit Television System

This page was intentionally left blank.

SECTION 01 11 00

SUMMARY OF WORK

The provisions of BART Facilities Standards, Standard Specifications, Release R3.1.2, dated April 2018, Section 01 11 00, Summary of Work, are superseded by these Contract Specifications.

PART 1 - GENERAL

1.01 SECTION INCLUDES

A. Contract Documents.

B. Contract Description.

C. Measurement and Payment.

D. Scope of Work.

E. Contract Limits.

F. Site Access.

G. Hours of Work.

H. Contract Duration.

I. Contract Liquidated Damages.

J. District Support.

K. Access Requirements and Interfaces with Others.

L. Permits.

M. Temporary Storage of Materials and Laydown Area.

N. Constraints Affecting Order of Work.

1.02 CONTRACT DOCUMENTS

A. The Work shall be performed and completed in accordance with the following documents:

1. General Conditions for Construction Contracts and Supplementary Conditions; Contract Specifications which invoke, modify, supersede, and augment the Standard Specifications; and the various forms and exhibits; all contained in the Contract Book.

2. The BART Facilities Standards, Standard Specifications, Release R3.1.2, dated April 2018, on Compact Disc (CD) or available for download on-line at www.bart.gov. In accordance with the General Conditions Article GC1, the Standard Specifications are applicable to the Work to the extent referenced in the Contract Specifications.

3. The Contract Drawings.

4. The Reference Drawings, including selected BFS Standard Drawings Release 3.1.2, dated April 2018, bound with the Contract Drawings.

1.03 CONTRACT DESCRIPTION

A. The Work is located at 7200 San Leandro Street, Oakland, CA 94621, The Coliseum Station. Work at this location is as Indicated, and as described below.

1. **Coliseum Station:** The Work, in general consists of furnishing all labor, equipment, materials, and services necessary for the modernization of two existing hydraulic elevators, converting the existing storage room to a new elevator machine room, the existing elevator machine room converted into a pump filter room and a new equipment room with associated mechanical, electrical and communication modifications. Equipment installation, testing, commissioning as Indicated in the Contract Drawings.

1.04 MEASUREMENT AND PAYMENT

A. Separate measurement or payment will not be made for Work required under this Contract Specifications Section. All costs in connection with the work specified herein will be considered to be included with the related items of work in the Bid Schedule of the Bid Form or incidental to the Work.

1.05 SCOPE OF WORK

A. The Work includes the following, but not limited to:

1. Mobilization.

2. Demolition and removal of existing controllers, power unit, jack assembly, roller guides, car and hoist-way doors, and elevator car assembly.

3. Hydraulic elevator construction, including controllers, power unit, jack assembly, slide guides, car and hoist-way doors, and elevator car assembly with interior finishes.

4. Elevator sump pit drainage and filter improvements. Elevator shaft improvements including pit ladder, door sill replacement, and sump pit grate.

5. Renovation, including demolition, of an existing BART Police Store Room to construct a new elevator machine room for new hydraulic elevator equipment and a new equipment room for new HVAC and electrical equipment.

6. Waterproofing sealer application and flashing work at existing elevator shafts to prevent water intrusion.

7. Heating, ventilation, and air conditioning (HVAC) for the elevator machine room.

8. Plumbing and Fire Protection modification work for the elevator machine room and elevator pit, including sump pump drainage and fire sprinklers. Plumbing lines to run overhead along the underside of the station platform with connection work inside the custodial room.

9. Related electrical work including elevator power.

10. Testing and acceptance during commissioning.

11. Communications systems upgrades, including fire alarm, CCTV, SCADA and telephone upgrades incidental to the above work.

12. Staging: Coordinate with District personnel through the Engineer via the scheduling process to allow for construction during station operation. Refer to Contract Drawings for proposed construction staging.

1.06 CONTRACT LIMITS

A. Contract limits are Indicated in the Contract Drawings.

1.07 SITE ACCESS

A. The Contractor's access to the Jobsite shall be coordinated with the Engineer. The Engineer's presence shall not relieve the Contractor of responsibility for performing the Work.

B. Access to District facilities will only be permitted provided the Contractor has received approval of the Four-Week Work Plan or Baseline Schedule. In addition, the Contractor shall give the Engineer at least four (4) weeks advance notice in writing prior to starting work at the Jobsite.

C. Work shall be scheduled and performed only in accordance with a District approved Site Specific Work Plan (SSWP) as Indicated.

D. All power connections and power up tests shall be performed during non-revenue hours and shall be in accordance with the approved SSWP.

E. The District's escalators shall not be used to transport materials and debris. Approval for limited elevator use may be permitted with restrictions as indicated by the District's AUTHORIZATION TO USE ELEVATOR EQUIPMENT FORM provided in Attachment 2, and is subject to elevator availability, and written approval of the AUTHORIZATION TO USE ELEVATOR EQUIPMENT FORM by the District's Engineer. Elevator use is not guaranteed and maybe revoked at any time by the District.

F. The Contractor shall not interfere in BART Revenue Operations under any circumstances and shall comply with all security and safety procedures in accordance with these Contract

Specifications and as Directed by the Engineer.

G. Site shall be secured at all times as Indicated.

H. Unless otherwise specified, all Work is to be completed during revenue hours.

1.08 HOURS OF WORK

A. Regular construction Work shall be performed between the hours of 5:00 a.m. and 7:00 p.m., on weekdays.

B. Non-revenue hours are from:

1:30 a.m. to 3:30 a.m. during weekdays

1:30 a.m. to 5:30 a.m. on Saturday

1:30 a.m. to 7:00 a.m. on Sunday

C. Work shall not be performed on Saturdays, Sundays or District holidays without prior approval from the Engineer. District-recognized holidays are as follows:

1. New Year's Day-January 1
2. Dr. Martin Luther King, Jr. Day- First Monday after January 15
3. President day- Third Monday in February
4. Memorial Day- Last Monday in May (Potential Shutdown Weekend)
5. Independence Day – July 4 (Potential Shutdown Weekend)
6. Labor Day – First Monday in September
7. Veterans Day– Second week in November
8. Thanksgiving Day, fourth Thursday in November
9. Christmas Day – December 25

D. Exceptions to the above hours of work will be permitted only upon written authorization from the Engineer.

1.09 CONTRACT DURATION

A. Contract Completion Timeline: The Contractor shall commence Work on the date specified in the Notice to Proceed (NTP). Pursuant to Article GC8.3 of the General Conditions, Contractor shall achieve Substantial Completion as defined in the General Conditions within 630 Calendar Days of the date specified in the NTP.

1.10 CONTRACT LIQUIDATED DAMAGES

A. Completion Time: Pursuant to Article GC8.3 of the General Conditions, the Contractor shall commence Work on the dates specified in the Notice to Proceed and shall achieve Substantial Completion as defined in the General Conditions within the milestone dates provided in Attachment 1 - Milestone Dates to this Contract Specification Section.

B. Liquidated Damages for Milestones specified in Attachment 1 - Milestone Dates: The amount of liquidated damages that will be assessed under the provisions of Article GC8.4.1 of the General Conditions for each intermediate milestone per Day for each Day's delay in completing the milestone, within the time specified in Attachment 1 - Milestone Dates.

1. Milestone 1: $1,900 per Calendar Day.

2. Milestone 2: $3,900 per Calendar Day.

3. Milestone are independent items and Liquated Damages can be assessed in parallel.

C. Liquidated Damages for Failure to Implement BART Police Recommendations: Refer to Contract Specifications Section 01 35 33, Security Procedures. If the Contractor fails to implement BART Police recommendations, the amount of liquidated damages that will be assessed will be $ 1,000 for each crime incident.

D. Liquidated Damages for Interruption of Revenue Operations: Contractor operations that require BART to reduce or stop train movement or service without prior approval has very serious consequences for the District and the travelling public and is to be avoided at all times. The Contractor will be assessed liquidated damages if its construction activities result in a complete or partial shutdown of a section of the BART Right-of-Way or if its construction activities result in a complete or partial shutdown of a BART Station, hereinafter referred to as an Interruption to Revenue Operations. The contractor is strongly encouraged to put in place contingency plans so that the BART Right-of-Way and BART stations are always available at the required time.

1. Every instance in which the District incurs an interruption to Revenue Operations within the Right of Way because of the Contractor, the Contractor will be assessed liquidated damages according to Attachment 1 **Table 1**. The amount assessed depends on the location within the BART system, time of the day, day of the week, and duration of the event.

2. Every instance in which the District incurs an interruption to Revenue Operations within the Station because of the Contractor, the Contractor will be assessed liquidated damages according to Attachment 1 **Table 2**. The amount assessed depends on the BART Station, time of the day, day of the week, and duration of the event.

3. The Contractor will be assessed liquidated damages as follows in Attachment 1 **Table 3** if/ when the District decides to establish a Bus Bridge to support the Interruption of Revenue Operations. The District has sole authority to establish a bus bridge

.

E. The District reserves the right to deduct the amount of liquidated damages specified in this Contract Specifications Section from any payment under the Contract.

1.11 DISTRICT SUPPORT

A. Employee in Charge (EIC): For work in the Operating Envelope, the District will assign and provide EIC(s) as specified to support the Contractor's work. For additional requirements refer to Section 01 35 14, Operating System Interface.

B. The District will assume the cost for 1,120 hours of EIC support. The actual incurred cost of the EICs beyond these hours shall be the responsibility of the Contractor and will be deducted from the value of the progress payments through the issuance of a Change Order. The rate for EICs is $ 130 per hour per EIC for the first 8 hours per shift, with a minimum of 8 hours per shift. The rate for EICs is $ 150 per hour for all hours after the first 8 hours in a shift. The Contractor shall include on its invoice the number of EIC hours utilized during the invoice period as Indicated in Contract Specifications Section 01 20 00, Price and Payment Procedures.

C. Cancellations: The Contractor shall notify the District of any cancellation of the above support at least two (2) Working Days in advance of the start of such support to avoid the cost of District support. Cancellations of EICs or Safe Clearances, made less than two (2) Working Days in advance of the requested support will be considered District supported hours worked.

D. District reserves the right to cancel any approved District Support at any time due to unforeseen circumstances.

1.12 ACCESS REQUIREMENTS AND INTERFACES WITH OTHERS

A. Non-BART Facility Standards: Work on non-BART facilities shall be performed in accordance with the jurisdictional authorities' standard drawings and specifications. The Contractor shall obtain such standards and comply with them as applicable.

B. Contractor shall cooperate with maintenance activities, work on other District contracts, and work by other Agencies, which may be in progress in the same general area as this Contract. The following District Contracts and projects by other Agencies are anticipated to be potentially under construction at Coliseum Station the same time as the Work:

1. Fire alarm system upgrades.

2. Alameda County Transportation Commission's East Bay Greenway Project

1.13 PERMITS

A. The Contractor shall work with the cities, counties, Office of State Fire Marshall (OSFM-CA) and other agencies affected by the Work of this Contract to determine what permits such as, but not limited to, elevator, encroachment, hauling, and disposal of debris permits which are necessary for the Work. The Contractor shall obtain and pay for permits and adjust its schedule as necessary to accommodate permit timing and the requirements of permitting authority.

B. The Contractor shall assume all costs related to any inspections and testing.

1.14 TEMPORARY STORAGE OF MATERIALS AND LAYDOWN AREA

A. Refer to Contract Specifications Section 01 52 00, Construction Facilities, for storage provisions.

B. The District will provide areas adjacent to the planned elevators within the Coliseum BART station that the Contractor may use, as Indicated on the Contract Drawings. The Contractor may use these areas for material laydown and/or a trailer for the Contractor's field office. This area shall not be used for any purpose other than the performance of this Contract.

C. Material storage and laydown areas shall be in compliance with Contract Specifications Section 01 57 00, Temporary Controls.

1.15 CONSTRAINTS AFFECTING ORDER OF WORK

A. Both elevators are to be constructed concurrently in order to minimize elevator down time.

B. The Contractor shall ensure that all materials required to complete the elevator renovations are delivered before the elevator shutdown period begins.

PART 2 - PRODUCTS

Not Used

PART 3 - EXECUTION

Not Used

END OF SECTION 01 11 00

ATTACHMENTS TO FOLLOW

This page was intentionally left blank.

ATTACHMENT 1
MILESTONE DATES

Milestone 1 – Elevator Shutdown. 220 calendar Days from the start of the first elevator shutdown to the completion of commissioning for both elevators, including all required inspections for both elevators.

Milestone 2 - Substantial Completion of all Work. 630 calendar Days from Notice to Proceed (NTP) to Substantial Completion, including commissioning of both elevators and Substantial Completion of all Work.

This page was intentionally left blank.

TABLE 1
Liquidated Damages for Service Interruptions Within the Right-Of Way

Day of the Week	Hour of the Day	Branch of the BART System Where a Service Interruption Exists							
		A10-A50	A10-M40, A10-K30, or K10-M10	A50-L30	A50-S50	K30-C88, or C88-E30	K30-R60	M40-M90	M90-W40, W30-Y10, or Y10-W40
Monday – Friday	4 a.m. - 5 a.m.	$1,200	$1,100	$1,100	$1,200	$1,700	$1,200	$1,200	$1,100
Monday – Friday	5 a.m. - 6 a.m.	$2,800	$5,400	$1,700	$2,000	$5,500	$2,200	$2,000	$1,300
Monday – Friday	6 a.m. - 7 a.m.	$5,000	$11,400	$2,300	$3,400	$7,800	$3,200	$3,900	$2,500
Monday – Friday	7 a.m. - 8 a.m.	$8,700	$22,000	$3,300	$5,400	$11,200	$4,900	$6,800	$3,300
Monday – Friday	8 a.m. - 9 a.m.	$9,400	$27,800	$3,400	$5,700	$9,800	$5,000	$8,700	$3,900
Monday – Friday	9 a.m. - 10 a.m.	$6,100	$18,100	$2,400	$3,900	$5,400	$3,500	$5,800	$3,200
Monday – Friday	10 a.m. - 11 a.m.	$4,200	$11,300	$1,900	$3,000	$3,900	$2,800	$4,500	$3,000
Monday – Friday	11 a.m. - 12 p.m.	$3,700	$9,600	$1,900	$2,700	$3,500	$2,500	$4,200	$2,900
Monday – Friday	12 p.m. - 1 p.m.	$3,600	$9,600	$1,800	$2,700	$3,500	$2,500	$4,200	$2,800
Monday – Friday	1 p.m. - 2 p.m.	$3,700	$10,200	$1,800	$2,700	$3,700	$2,700	$4,300	$2,900
Monday – Friday	2 p.m. - 3 p.m.	$4,400	$12,900	$2,000	$3,000	$4,400	$2,900	$5,000	$2,900
Monday – Friday	3 p.m. - 4 p.m.	$5,800	$17,800	$2,600	$3,800	$6,300	$3,500	$6,100	$3,100
Monday – Friday	4 p.m. - 5 p.m.	$8,400	$26,400	$3,600	$5,300	$9,300	$4,300	$8,400	$3,600
Monday – Friday	5 p.m. - 6 p.m.	$10,400	$32,400	$4,500	$6,800	$11,100	$4,900	$9,800	$3,900
Monday – Friday	6 p.m. - 7 p.m.	$7,000	$20,700	$3,600	$5,500	$8,200	$3,700	$6,500	$3,200
Monday – Friday	7 p.m. - 8 p.m.	$4,200	$11,700	$2,300	$3,400	$4,600	$2,500	$4,200	$2,500
Monday – Friday	8 p.m. - 9 p.m.	$2,900	$7,800	$1,800	$2,300	$3,200	$2,100	$3,200	$2,100
Monday – Friday	9 p.m. - 10 p.m.	$2,500	$6,100	$1,600	$1,900	$2,600	$1,800	$2,700	$2,000
Monday – Friday	10 p.m. - 11 p.m.	$2,300	$6,000	$1,500	$1,700	$2,300	$1,600	$2,400	$1,800
Monday – Friday	11 p.m. - 12 a.m.	$1,900	$4,000	$1,400	$1,600	$2,000	$1,400	$1,800	$1,500
Monday – Friday	12 a.m. - 1 a.m.	$1,300	$2,100	$1,100	$1,200	$1,500	$1,200	$1,300	$1,200
Monday – Friday	1 a.m. - 2 a.m.	$1,100	$1,200	$1,100	$1,100	$1,100	$1,100	$1,100	$1,100
Saturday	4 a.m. – 5 a.m.	n/a	n/a	n/a	n/a	n/a	n/a	n/a	n/a
Saturday	5 a.m. - 6 a.m.	$1,100	$1,100	$1,100	$1,100	$1,300	$1,200	$1,100	$1,100
Saturday	6 a.m. - 7 a.m.	$1,900	$3,300	$1,200	$1,600	$2,200	$1,600	$1,800	$1,300
Saturday	7 a.m. - 8 a.m.	$2,400	$4,600	$1,400	$2,000	$2,500	$2,000	$2,500	$1,900
Saturday	8 a.m. - 9 a.m.	$2,900	$6,500	$1,600	$2,300	$3,100	$2,200	$3,200	$2,300
Saturday	9 a.m. - 10 a.m.	$3,300	$7,700	$1,800	$2,700	$3,300	$2,400	$3,600	$2,500
Saturday	10 a.m. - 11 a.m.	$3,900	$9,300	$2,100	$3,200	$3,500	$2,500	$4,000	$2,900
Saturday	11 a.m. - 12 p.m.	$4,100	$10,700	$2,200	$3,500	$3,800	$2,600	$4,200	$2,900
Saturday	12 p.m. - 1 p.m.	$4,100	$11,100	$2,100	$3,500	$3,600	$2,600	$4,300	$3,000
Saturday	1 p.m. - 2 p.m.	$3,900	$10,900	$1,900	$3,200	$3,600	$2,700	$4,400	$2,800

TABLE 1 CONTINUED
Liquidated Damages for Service Interruptions Within the Right-Of Way

Day of the Week	Hour of the Day	Branch of the BART System Where a Service Interruption Exists							
		A10-A50	A10-M40, A10-K30, or K10-M10	A50-L30	A50-S50	K30-C88, or C88-E30	K30-R60	M40-M90	M90-W40, W30-Y10, or Y10-W40
Saturday	2 p.m. - 3 p.m.	$3,900	$11,100	$2,000	$3,200	$3,600	$2,700	$4,500	$2,800
Saturday	3 p.m. - 4 p.m.	$4,100	$11,700	$2,100	$3,300	$3,700	$2,700	$4,600	$2,800
Saturday	4 p.m. - 5 p.m.	$4,600	$13,200	$2,300	$3,600	$4,100	$2,800	$4,900	$2,900
Saturday	5 p.m. - 6 p.m.	$4,600	$13,100	$2,400	$3,800	$4,100	$2,800	$4,800	$2,800
Saturday	6 p.m. - 7 p.m.	$4,200	$11,900	$2,200	$3,700	$3,700	$2,600	$4,200	$2,500
Saturday	7 p.m. - 8 p.m.	$3,400	$9,400	$2,200	$2,900	$3,100	$2,200	$3,600	$2,200
Saturday	8 p.m. - 9 p.m.	$2,800	$7,100	$2,100	$2,300	$2,600	$2,000	$2,900	$2,100
Saturday	9 p.m. - 10 p.m.	$2,600	$6,400	$1,700	$2,200	$2,500	$1,700	$2,500	$2,000
Saturday	10 p.m. - 11 p.m.	$2,300	$5,800	$1,600	$1,900	$2,200	$1,700	$2,400	$1,800
Saturday	11 p.m. - 12 a.m.	$2,000	$4,800	$1,400	$1,700	$2,000	$1,600	$2,000	$1,600
Saturday	12 a.m. - 1 a.m.	$1,500	$2,800	$1,200	$1,400	$1,600	$1,200	$1,500	$1,200
Saturday	1 a.m. - 2 a.m.	$1,200	$1,200	$1,100	$1,100	$1,200	$1,100	$1,100	$1,100
Sunday or Holiday	4 a.m. – 5 a.m.	n/a	n/a	n/a	n/a	n/a	n/a	n/a	n/a
Sunday or Holiday	5 a.m. – 6 a.m.	n/a	n/a	n/a	n/a	n/a	n/a	n/a	n/a
Sunday or Holiday	6 a.m. – 7 a.m.	n/a	n/a	n/a	n/a	n/a	n/a	n/a	n/a
Sunday or Holiday	7 a.m. - 8 a.m.	$1,700	$2,100	$1,200	$1,200	$1,300	$1,600	$1,600	$1,300
Sunday or Holiday	8 a.m. - 9 a.m.	$2,600	$5,500	$1,500	$2,100	$2,900	$1,900	$2,600	$1,700
Sunday or Holiday	9 a.m. - 10 a.m.	$2,900	$6,000	$1,700	$2,500	$2,800	$2,100	$3,000	$2,800
Sunday or Holiday	10 a.m. - 11 a.m.	$3,500	$8,100	$1,900	$2,900	$3,100	$2,300	$3,600	$3,200
Sunday or Holiday	11 a.m. - 12 p.m.	$3,800	$9,300	$2,100	$3,200	$3,400	$2,400	$3,800	$3,200
Sunday or Holiday	12 p.m. - 1 p.m.	$3,800	$9,600	$2,000	$3,100	$3,200	$2,400	$3,900	$3,200
Sunday or Holiday	1 p.m. - 2 p.m.	$3,400	$9,100	$1,800	$2,800	$3,000	$2,400	$3,800	$3,100
Sunday or Holiday	2 p.m. - 3 p.m.	$3,300	$8,900	$1,700	$2,700	$2,900	$2,300	$3,900	$3,100
Sunday or Holiday	3 p.m. - 4 p.m.	$3,400	$9,200	$1,800	$2,900	$2,900	$2,300	$3,800	$2,900
Sunday or Holiday	4 p.m. - 5 p.m.	$4,000	$10,400	$2,100	$3,300	$3,200	$2,400	$4,000	$3,000
Sunday or Holiday	5 p.m. - 6 p.m.	$3,800	$10,100	$2,200	$3,600	$3,200	$2,400	$3,900	$2,800
Sunday or Holiday	6 p.m. - 7 p.m.	$3,400	$8,700	$2,000	$3,400	$3,000	$2,200	$3,400	$2,600
Sunday or Holiday	7 p.m. - 8 p.m.	$2,800	$6,600	$1,900	$2,500	$2,700	$1,900	$2,800	$2,400
Sunday or Holiday	8 p.m. - 9 p.m.	$2,400	$5,400	$1,800	$2,100	$2,400	$1,700	$2,400	$2,100
Sunday or Holiday	9 p.m. - 10 p.m.	$2,200	$4,600	$1,500	$1,900	$2,100	$1,600	$2,200	$1,900
Sunday or Holiday	10 p.m. - 11 p.m.	$1,800	$3,900	$1,300	$1,700	$1,800	$1,500	$2,000	$1,700
Sunday or Holiday	11 p.m. - 12 a.m.	$1,600	$3,100	$1,300	$1,500	$1,600	$1,300	$1,700	$1,500
Sunday or Holiday	12 a.m. - 1 a.m.	$1,300	$1,800	$1,100	$1,200	$1,300	$1,100	$1,300	$1,200
Sunday or Holiday	1 a.m. - 2 a.m.	$1,100	$1,100	$1,100	$1,100	$1,100	$1,100	$1,100	$1,100

TABLE 2
Liquidated Damages for Service Interruptions Within the Stations

Day of the Week	Hour of the Day	Station Where Patron Access and Egress is Restricted							
		A10, K10-K30, or M10-M40	A20-A50 or H10-H40	A60-S50	C10-C88, or E20-E30	L10-L30	M50-M90	R10-R60	W10-W40, or Y10
Monday – Friday	4 a.m. - 5 a.m.	$700	$500	$500	$600	$500	$500	$500	$500
Monday – Friday	5 a.m. - 6 a.m.	$1,500	$800	$700	$1,000	$900	$900	$800	$800
Monday – Friday	6 a.m. - 7 a.m.	$2,700	$1,300	$1,200	$1,500	$1,400	$1,500	$1,200	$1,200
Monday – Friday	7 a.m. - 8 a.m.	$4,600	$1,700	$1,600	$1,900	$2,000	$2,200	$1,700	$1,700
Monday – Friday	8 a.m. - 9 a.m.	$5,400	$1,700	$1,700	$1,800	$2,200	$2,400	$1,900	$2,000
Monday – Friday	9 a.m. - 10 a.m.	$3,600	$1,300	$1,300	$1,300	$1,600	$1,700	$1,500	$1,700
Monday – Friday	10 a.m. - 11 a.m.	$2,300	$1,100	$1,000	$1,000	$1,200	$1,300	$1,200	$1,600
Monday – Friday	11 a.m. - 12 p.m.	$2,000	$1,000	$900	$900	$1,000	$1,200	$1,100	$1,600
Monday – Friday	12 p.m. - 1 p.m.	$1,900	$1,000	$900	$900	$1,000	$1,200	$1,100	$1,500
Monday – Friday	1 p.m. - 2 p.m.	$2,000	$1,000	$900	$900	$1,000	$1,300	$1,100	$1,600
Monday – Friday	2 p.m. - 3 p.m.	$2,400	$1,200	$1,000	$1,100	$1,100	$1,400	$1,300	$1,600
Monday – Friday	3 p.m. - 4 p.m.	$3,300	$1,500	$1,200	$1,400	$1,500	$1,800	$1,600	$1,800
Monday – Friday	4 p.m. - 5 p.m.	$4,900	$1,800	$1,700	$1,900	$2,100	$2,400	$1,900	$2,200
Monday – Friday	5 p.m. - 6 p.m.	$5,900	$2,000	$1,900	$2,100	$2,400	$2,900	$2,200	$2,300
Monday – Friday	6 p.m. - 7 p.m.	$4,200	$1,500	$1,600	$1,600	$1,800	$2,200	$1,800	$1,900
Monday – Friday	7 p.m. - 8 p.m.	$2,400	$1,100	$1,100	$1,100	$1,100	$1,400	$1,200	$1,500
Monday – Friday	8 p.m. - 9 p.m.	$1,600	$900	$800	$800	$900	$1,100	$900	$1,200
Monday – Friday	9 p.m. - 10 p.m.	$1,400	$800	$700	$700	$800	$900	$800	$1,000
Monday – Friday	10 p.m. - 11 p.m.	$1,300	$800	$600	$700	$700	$900	$800	$900
Monday – Friday	11 p.m. - 12 a.m.	$1,000	$700	$600	$600	$600	$700	$600	$800
Monday – Friday	12 a.m. - 1 a.m.	$700	$500	$500	$500	$500	$600	$500	$600
Monday – Friday	1 a.m. - 2 a.m.	$500	$500	$500	$500	$500	$500	$500	$500
Saturday	4 a.m. - 5 a.m.	n/a	n/a	n/a	n/a	n/a	n/a	n/a	n/a
Saturday	5 a.m. - 6 a.m.	$500	$500	$500	$500	$500	$500	$500	$500
Saturday	6 a.m. - 7 a.m.	$800	$700	$600	$600	$600	$700	$600	$700
Saturday	7 a.m. - 8 a.m.	$1,100	$800	$700	$700	$700	$900	$800	$1,000
Saturday	8 a.m. - 9 a.m.	$1,400	$900	$800	$800	$800	$1,000	$900	$1,200
Saturday	9 a.m. - 10 a.m.	$1,700	$900	$900	$800	$1,000	$1,100	$1,000	$1,300
Saturday	10 a.m. - 11 a.m.	$2,000	$900	$1,000	$900	$1,100	$1,300	$1,100	$1,500
Saturday	11 a.m. - 12 p.m.	$2,300	$1,000	$1,100	$1,000	$1,200	$1,400	$1,200	$1,600
Saturday	12 p.m. - 1 p.m.	$2,300	$1,000	$1,100	$900	$1,200	$1,400	$1,200	$1,600
Saturday	1 p.m. - 2 p.m.	$2,200	$1,000	$1,000	$900	$1,100	$1,400	$1,200	$1,600

TABLE 2 CONTINUED
Liquidated Damages for Service Interruptions Within the Stations

Day of the Week	Hour of the Day	Station Where Patron Access and Egress is Restricted							
		A10, K10-K30, or M10-M40	A20-A50 or H10-H40	A60-S50	C10-C88, or E20-E30	L10-L30	M50-M90	R10-R60	W10-W40, or Y10
Saturday	2 p.m. - 3 p.m.	$2,200	$1,000	$1,000	$900	$1,100	$1,500	$1,200	$1,500
Saturday	3 p.m. - 4 p.m.	$2,300	$1,100	$1,000	$1,000	$1,100	$1,500	$1,300	$1,500
Saturday	4 p.m. - 5 p.m.	$2,500	$1,200	$1,100	$1,000	$1,200	$1,600	$1,400	$1,600
Saturday	5 p.m. - 6 p.m.	$2,600	$1,100	$1,100	$1,000	$1,200	$1,600	$1,400	$1,600
Saturday	6 p.m. - 7 p.m.	$2,400	$1,100	$1,100	$900	$1,100	$1,500	$1,300	$1,400
Saturday	7 p.m. - 8 p.m.	$1,900	$1,000	$900	$900	$1,000	$1,300	$1,100	$1,300
Saturday	8 p.m. - 9 p.m.	$1,600	$800	$800	$800	$900	$1,100	$900	$1,200
Saturday	9 p.m. - 10 p.m.	$1,500	$800	$800	$700	$800	$1,000	$800	$1,000
Saturday	10 p.m. - 11 p.m.	$1,300	$700	$700	$700	$800	$900	$800	$900
Saturday	11 p.m. - 12 a.m.	$1,100	$700	$600	$600	$700	$800	$700	$800
Saturday	12 a.m. - 1 a.m.	$800	$600	$500	$500	$600	$600	$600	$600
Saturday	1 a.m. - 2 a.m.	$500	$500	$500	$500	$500	$500	$500	$500
Sunday or Holiday	4 a.m. - 5 a.m.	n/a	n/a	n/a	n/a	n/a	n/a	n/a	n/a
Sunday or Holiday	5 a.m. - 6 a.m.	n/a	n/a	n/a	n/a	n/a	n/a	n/a	n/a
Sunday or Holiday	6 a.m. - 7 a.m.	n/a	n/a	n/a	n/a	n/a	n/a	n/a	n/a
Sunday or Holiday	7 a.m. - 8 a.m.	$800	$600	$500	$600	$600	$600	$600	$700
Sunday or Holiday	8 a.m. - 9 a.m.	$1,200	$800	$700	$700	$700	$800	$800	$1,000
Sunday or Holiday	9 a.m. - 10 a.m.	$1,500	$900	$800	$800	$900	$1,000	$900	$1,300
Sunday or Holiday	10 a.m. - 11 a.m.	$1,900	$900	$900	$800	$1,000	$1,100	$1,000	$1,500
Sunday or Holiday	11 a.m. - 12 p.m.	$2,100	$1,000	$1,000	$900	$1,100	$1,200	$1,100	$1,600
Sunday or Holiday	12 p.m. - 1 p.m.	$2,000	$1,000	$1,000	$900	$1,100	$1,300	$1,100	$1,600
Sunday or Holiday	1 p.m. - 2 p.m.	$1,900	$1,000	$900	$800	$1,000	$1,300	$1,100	$1,500
Sunday or Holiday	2 p.m. - 3 p.m.	$1,900	$900	$900	$800	$900	$1,300	$1,100	$1,500
Sunday or Holiday	3 p.m. - 4 p.m.	$1,900	$1,000	$900	$900	$1,000	$1,300	$1,100	$1,400
Sunday or Holiday	4 p.m. - 5 p.m.	$2,100	$1,100	$1,000	$900	$1,100	$1,300	$1,200	$1,500
Sunday or Holiday	5 p.m. - 6 p.m.	$2,100	$1,100	$1,000	$900	$1,100	$1,300	$1,200	$1,400
Sunday or Holiday	6 p.m. - 7 p.m.	$1,900	$900	$1,000	$800	$1,000	$1,200	$1,100	$1,400
Sunday or Holiday	7 p.m. - 8 p.m.	$1,500	$800	$900	$800	$900	$1,000	$900	$1,300
Sunday or Holiday	8 p.m. - 9 p.m.	$1,300	$800	$700	$700	$800	$900	$800	$1,100
Sunday or Holiday	9 p.m. - 10 p.m.	$1,100	$700	$700	$700	$700	$800	$700	$1,000
Sunday or Holiday	10 p.m. - 11 p.m.	$1,000	$700	$600	$600	$600	$700	$700	$900
Sunday or Holiday	11 p.m. - 12 a.m.	$800	$600	$600	$600	$600	$600	$600	$800
Sunday or Holiday	12 a.m. - 1 a.m.	$600	$500	$500	$500	$500	$500	$500	$600
Sunday or Holiday	1 a.m. - 2 a.m.	$500	$500	$500	$500	$500	$500	$500	$500

TABLE 3
Liquidated Damages for Bus Bridges

Day of the Week	Hour of the Day	Branch of the BART System for the Bus Bridge							
		A10-A50	A10-M40, A10-K30, or K10-M10	A50-L30	A50-S50	K30-C88, or C88-E30	K30-R60	M40-M90	M90-W40, W30-Y10, or Y10-W40
Monday – Friday	4 a.m. - 5 a.m.	$2,400	$2,300	$2,200	$2,300	$2,400	$2,300	$2,300	$2,300
Monday – Friday	5 a.m. - 6 a.m.	$4,700	$7,300	$2,900	$3,100	$4,600	$3,900	$3,600	$2,600
Monday – Friday	6 a.m. - 7 a.m.	$7,500	$14,300	$3,500	$4,200	$6,200	$5,400	$6,000	$3,500
Monday – Friday	7 a.m. - 8 a.m.	$12,200	$24,900	$4,600	$5,900	$8,200	$7,900	$11,300	$4,900
Monday – Friday	8 a.m. - 9 a.m.	$13,400	$31,400	$4,600	$6,000	$7,700	$8,600	$14,800	$5,300
Monday – Friday	9 a.m. - 10 a.m.	$8,900	$21,100	$3,500	$4,300	$5,000	$5,900	$10,000	$4,100
Monday – Friday	10 a.m. - 11 a.m.	$5,800	$12,000	$2,900	$3,400	$3,700	$4,500	$6,900	$3,700
Monday – Friday	11 a.m. - 12 p.m.	$4,900	$9,100	$2,700	$3,200	$3,300	$4,100	$6,100	$3,500
Monday – Friday	12 p.m. - 1 p.m.	$4,400	$7,700	$2,600	$3,100	$3,100	$4,000	$6,000	$3,500
Monday – Friday	1 p.m. - 2 p.m.	$4,400	$7,700	$2,600	$3,000	$3,000	$4,000	$6,200	$3,600
Monday – Friday	2 p.m. - 3 p.m.	$5,500	$11,200	$2,800	$3,300	$3,600	$4,300	$6,900	$3,600
Monday – Friday	3 p.m. - 4 p.m.	$7,600	$17,000	$3,200	$3,900	$4,900	$5,300	$8,500	$3,900
Monday – Friday	4 p.m. - 5 p.m.	$11,300	$26,300	$4,000	$5,200	$6,800	$6,800	$12,300	$4,500
Monday – Friday	5 p.m. - 6 p.m.	$13,600	$31,400	$4,600	$6,500	$7,800	$8,100	$15,300	$5,000
Monday – Friday	6 p.m. - 7 p.m.	$9,200	$19,800	$3,900	$5,200	$6,100	$6,500	$10,300	$4,200
Monday – Friday	7 p.m. - 8 p.m.	$5,600	$11,400	$3,000	$3,700	$4,000	$4,500	$6,700	$3,400
Monday – Friday	8 p.m. - 9 p.m.	$4,000	$7,600	$2,600	$2,900	$3,100	$3,600	$4,900	$3,000
Monday – Friday	9 p.m. - 10 p.m.	$3,600	$5,800	$2,500	$2,600	$2,900	$3,100	$4,200	$2,800
Monday – Friday	10 p.m. - 11 p.m.	$3,700	$6,200	$2,500	$2,700	$3,000	$3,100	$4,100	$2,700
Monday – Friday	11 p.m. - 12 a.m.	$3,300	$4,800	$2,500	$2,600	$2,800	$2,900	$3,500	$2,600
Monday – Friday	12 a.m. - 1 a.m.	$2,600	$3,300	$2,300	$2,400	$2,500	$2,500	$2,700	$2,300
Monday – Friday	1 a.m. - 2 a.m.	$2,300	$2,400	$2,300	$2,300	$2,200	$2,300	$2,400	$2,300
Saturday	4 a.m. - 5 a.m.	n/a	n/a	n/a	n/a	n/a	n/a	n/a	n/a
Saturday	5 a.m. - 6 a.m.	$2,300	$2,300	$2,300	$2,300	$2,200	$2,300	$2,300	$2,300
Saturday	6 a.m. - 7 a.m.	$3,000	$4,000	$2,300	$2,600	$2,600	$2,800	$3,100	$2,500
Saturday	7 a.m. - 8 a.m.	$3,600	$5,000	$2,300	$2,800	$2,800	$3,200	$4,000	$2,800
Saturday	8 a.m. - 9 a.m.	$4,100	$6,500	$2,500	$2,900	$3,000	$3,500	$4,800	$3,100
Saturday	9 a.m. - 10 a.m.	$4,400	$7,600	$2,600	$3,100	$3,200	$3,800	$5,300	$3,200
Saturday	10 a.m. - 11 a.m.	$5,000	$8,600	$2,800	$3,400	$3,400	$4,100	$5,900	$3,500
Saturday	11 a.m. - 12 p.m.	$5,300	$9,900	$2,900	$3,500	$3,600	$4,300	$6,300	$3,600
Saturday	12 p.m. - 1 p.m.	$5,100	$10,300	$2,800	$3,400	$3,400	$4,400	$6,500	$3,700
Saturday	1 p.m. - 2 p.m.	$4,700	$9,200	$2,600	$3,200	$3,200	$4,300	$6,500	$3,600

TABLE 3 CONTINUED
Liquidated Damages for Bus Bridges

Day of the Week	Hour of the Day	Branch of the BART System for the Bus Bridge							
		A10-A50	A10-M40, A10-K30, or K10-M10	A50-L30	A50-S50	K30-C88, or C88-E30	K30-R60	M40-M90	M90-W40, W30-Y10, or Y10-W40
Saturday	2 p.m. - 3 p.m.	$4,600	$8,500	$2,700	$3,200	$3,200	$4,100	$6,500	$3,500
Saturday	3 p.m. - 4 p.m.	$4,800	$9,100	$2,700	$3,300	$3,100	$4,100	$6,700	$3,500
Saturday	4 p.m. - 5 p.m.	$5,500	$10,900	$2,800	$3,500	$3,400	$4,300	$7,300	$3,600
Saturday	5 p.m. - 6 p.m.	$5,500	$11,200	$2,900	$3,700	$3,500	$4,600	$7,400	$3,500
Saturday	6 p.m. - 7 p.m.	$5,100	$10,300	$2,800	$3,600	$3,300	$4,400	$6,600	$3,400
Saturday	7 p.m. - 8 p.m.	$4,600	$8,500	$2,700	$3,100	$3,100	$4,000	$5,600	$3,100
Saturday	8 p.m. - 9 p.m.	$4,100	$6,800	$2,600	$2,900	$2,900	$3,600	$4,600	$3,000
Saturday	9 p.m. - 10 p.m.	$3,800	$6,400	$2,500	$2,800	$2,900	$3,100	$4,200	$2,800
Saturday	10 p.m. - 11 p.m.	$3,600	$5,800	$2,500	$2,700	$2,800	$3,100	$4,200	$2,800
Saturday	11 p.m. - 12 a.m.	$3,400	$5,400	$2,500	$2,600	$2,800	$3,000	$3,600	$2,600
Saturday	12 a.m. - 1 a.m.	$2,900	$4,000	$2,300	$2,500	$2,500	$2,600	$3,000	$2,300
Saturday	1 a.m. - 2 a.m.	$2,300	$2,500	$2,300	$2,300	$2,200	$2,300	$2,400	$2,300
Sunday or Holiday	4 a.m. - 5 a.m.	n/a	n/a	n/a	n/a	n/a	n/a	n/a	n/a
Sunday or Holiday	5 a.m. - 6 a.m.	n/a	n/a	n/a	n/a	n/a	n/a	n/a	n/a
Sunday or Holiday	6 a.m. - 7 a.m.	n/a	n/a	n/a	n/a	n/a	n/a	n/a	n/a
Sunday or Holiday	7 a.m. - 8 a.m.	$2,700	$2,900	$2,300	$2,300	$2,300	$2,600	$3,000	$2,400
Sunday or Holiday	8 a.m. - 9 a.m.	$3,700	$5,200	$2,400	$2,800	$2,900	$3,100	$4,100	$2,900
Sunday or Holiday	9 a.m. - 10 a.m.	$3,900	$6,300	$2,500	$2,900	$3,000	$3,400	$4,500	$3,200
Sunday or Holiday	10 a.m. - 11 a.m.	$4,500	$7,700	$2,700	$3,200	$3,300	$3,800	$5,400	$3,400
Sunday or Holiday	11 a.m. - 12 p.m.	$4,900	$8,700	$2,800	$3,400	$3,500	$4,000	$5,700	$3,400
Sunday or Holiday	12 p.m. - 1 p.m.	$4,900	$8,900	$2,700	$3,300	$3,300	$4,000	$5,900	$3,500
Sunday or Holiday	1 p.m. - 2 p.m.	$4,200	$7,800	$2,600	$3,000	$3,000	$3,800	$5,700	$3,400
Sunday or Holiday	2 p.m. - 3 p.m.	$4,000	$7,100	$2,500	$2,900	$2,900	$3,600	$5,700	$3,300
Sunday or Holiday	3 p.m. - 4 p.m.	$4,200	$7,800	$2,500	$3,000	$2,900	$3,600	$5,800	$3,300
Sunday or Holiday	4 p.m. - 5 p.m.	$5,100	$9,500	$2,700	$3,300	$3,200	$3,900	$6,200	$3,400
Sunday or Holiday	5 p.m. - 6 p.m.	$4,900	$9,700	$2,800	$3,400	$3,300	$4,100	$6,500	$3,300
Sunday or Holiday	6 p.m. - 7 p.m.	$4,400	$8,500	$2,700	$3,400	$3,100	$3,800	$5,600	$3,200
Sunday or Holiday	7 p.m. - 8 p.m.	$4,000	$6,600	$2,500	$3,000	$3,000	$3,400	$4,600	$3,000
Sunday or Holiday	8 p.m. - 9 p.m.	$3,500	$5,300	$2,500	$2,700	$2,700	$3,200	$3,900	$2,900
Sunday or Holiday	9 p.m. - 10 p.m.	$3,300	$4,600	$2,400	$2,600	$2,600	$2,800	$3,600	$2,800
Sunday or Holiday	10 p.m. - 11 p.m.	$3,000	$4,300	$2,300	$2,500	$2,500	$2,800	$3,400	$2,800
Sunday or Holiday	11 p.m. - 12 a.m.	$2,900	$4,000	$2,300	$2,400	$2,500	$2,700	$3,000	$2,600
Sunday or Holiday	12 a.m. - 1 a.m.	$2,500	$2,900	$2,300	$2,300	$2,300	$2,400	$2,500	$2,300
Sunday or Holiday	1 a.m. - 2 a.m.	$2,300	$2,300	$2,200	$2,300	$2,200	$2,300	$2,300	$2,300

End of Attachment 1

This page was intentionally left blank.

Bay Area Rapid Transit District

Authorization to Use Elevator Equipment

Assumption of Liability and Declaration of Responsibility for Damages to Persons and / or Property ---

1) We, the Undersigned hereby request the use of the following BART District Elevator equipment (See Unit Identification below) for purposes of moving materials and / or items other than natural persons in a manner for which the elevator equipment is not specifically designed and further agree that the District has no duty to provide the equipment for use or service regardless if the authorization is signed as service interruptions can occur.

2) The Undersigned Party hereby assumes full financial responsibility for all injuries to persons and / or damages to the elevator equipment resulting from their use of this equipment.

3) The Undersigned Party agrees to hold harmless BART, including its employees, Managers, and Directors from all liability arising out of the use of said equipment.

4) The Undersigned Party agrees that should any damage occur as the result of their use of the equipment under this authorization, they will **immediately** repair the damage in a manner approved by the BART District Representative, including utilizing an elevator contractor, on overtime, if necessary.

5) All proposed methods, including time of use for this equipment shall first be coordinated through the District Representative and are subject to approval before the equipment is used by the requesting party.

6) Protective pads must be employed inside the elevator to protect the cab wall, and plywood and / or Masonite type of material must be used to protect the flooring surfaces and sills from any damage. Any & all dollies, carts, etc. to be utilized, must have non-steel rollers, and shall not leave any trace elements or cause any damage on any surface inside or outside of the elevator.

7) Use of BART vertical transportation equipment must first be scheduled with the District Representative so as not to adversely impact revenue service to the public. Preferably during non-revenue hours.

8) An approved BART District Representative **must** be on-site to operate the elevator for the entire duration of the move.

9) Digital photographs displaying the full limits of the items to be transported, full limits of the elevator surfaces interfaced (car interior, interior and exterior door surfaces, doorway) before and after the use, protective measure in place, shall be transmitted to the District Representative and to the District approver within 3 days of each use.

10) Please submit all documents, inquiries and/or comments to Mechanical Engineering via email to: ElevatorAuthorization@bart.gov

Station & Unit Identification:_____
Labor Task Profile ID for BART Elevator/Escalator Maintenance:_____
Labor Approved for Overtime (Y/N):_____
Additional Memoranda/Requirements, Include:

- Summary/Description of Items and Use
- Dates and Times Proposed (Provide attachments as needed such as schedule)

_____
_____

Weight of Materials/Items		(lb)
Weight of Material Handling Devices		(lb)
Weight of Car Protection		(lb)
Weight of People		(lb)
Total Weight (the District will limit the total weight to 2/3 of the car's capacity. Up to 3/4 capacity may be allowed in some instances)		(lb)
Calculated loading total wt/total area		(lb/sqft)
Calculated loading highest concentration		(lb/sqft)

List Attachments: N/A

Signature of Requesting Party: _____Date:_____

Print Name:_____

Company:_____

24/7 Cellular Phone:_____

Approval – Route to M&E Mechanical Engineering/ Copy Elevator - Escalator Maint.

Signature: _____Date:_____

Name and Title: _____

To be Completed by District Representative

Use Date:_____Time Start:_____Time End:_____

District Representative: _____Phone: _____

End of Attachment 2

This page was intentionally left blank.

SECTION 01 20 00

PRICE AND PAYMENT PROCEDURES

The provisions of BART Facilities Standards, Standard Specifications, Release R3.1.2, dated April 2018, Section 01 20 00, Price and Payment Procedures, shall apply to the Work except as modified herein.

PART 1 - GENERAL

1.02 LUMP-SUM MEASUREMENT: Delete Article 1.02A.1 in its entirety and substitute therefore the following:

1. If the Contractor requests progress payments for lump-sum items or amounts in the Bid Schedule, such progress payments will be made in accordance with a Schedule of Values, a well-balanced, detailed program of payment apportioning. Such Schedule of Values shall be prepared by the Contractor and submitted to the Engineer for approval within thirty (30) Days of the effective date of the Notice to Proceed. The Schedule of Values shall be submitted in the format shown in the sample Schedule of Values provided in the attachment herein. Such Schedule of Values may require modifications during the Contract, as determined by the Engineer.

1.04 VALUES OF UNIT PRICES: Add the following Article 1.04C:

C. Payment Schedule: The following Bid Items are intended to encompass the entire scope of Work. All labor, equipment and materials needed to perform the Work is included in these items. Any and all Work that is required not specifically Indicated in the Bid Schedule shall be incidental to the Bid Items and shall be provided at no additional cost to the District.

All unit price items will be field measured for payment by the Indicated units in these Contract Documents.

1. Bid Item No. 1: Mobilization

    a. Mobilization will include bonding costs, accumulating tools, apparatus, equipment, materials, and personnel, and performing final removal and demobilization.

2. Bid Item No. 2: Allowance for Differing Site Conditions

    a. An Allowance is listed in the Bid Schedule of the Bid Form to provide funds for paying for possible additional Work due to differing site conditions.

3. Bid Item No. 3: Allowance for Permits, Licenses, and fees

    a. An Allowance is listed in the Bid Schedule of the Bid Form to provide funds for paying for plan Submittal, inspections by governing authorities and obtaining operating permits.

4. Bid Item No. 4: Allowance for Partnering Program

    a. An Allowance is Indicated in the Bid Schedule to provide funds for paying for Partnering Program.

5. Bid Item No. 5: Allowance for District Caused Delays

    a. An Allowance is listed in the Bid Schedule of the Bid Form to provide funds for District cause delays.

6. Bid Item No. 6: Allowance for RWP Training

    a. An Allowance is listed in the Bid Schedule of the Bid Form for the District to provide training to Contractor personnel and must pass a test in order to be certified for Roadway Worker certification in accordance with the Contract Documents.

7. Bid Item No. 7: Allowance for Handling and disposal of Hazardous Material

    a. An Allowance is listed in the Bid Schedule of the Bid Form to provide funds for hazardous waste. Store and dispose of according to Contract requirements and local regulations.

8. Bid Item No. 8: Allowance for Operating System Delays

    a. An Allowance is listed in the Bid Schedule of the Bid Form to provide funds for Operating System Delays.

9. Bid Item No. 9: Allowance for Existing Elevator #30 Roof and Roof Drain

    a. An Allowance is listed in the Bid Schedule of the Bid Form to provide funds to inspect the existing roof and roof drain. Repair as required see drawing A402.

10. Bid Item No. 10: Allowance for Incentive Bonus if Eligible (See SC 8.2.1)

    a. An Allowance is listed in the Bid Schedule of the Bid Form to provide funds for an Incentive Bonus if eligible, in accordance with SC 8.2.1 and Spec Section 01 20 00, Article 1.09.

11. Bid Item No. 11: Allowance for Watchperson Activities

    a. An allowance is listed in the Bid Schedule of the Bid Form to provide funds for Watchperson activities. A Watchperson shall have the means to notify the crew and shall be required for Work in the Track Zone

12. Bid Item No. 12: Contractor’s Field Office

    a. The Contractor’s field office shall be situated in the work area at a location Indicated on the Contract Drawings and approved by the Engineer.

13. Bid Item No. 13: Non-Illuminated Signage, vinyl graphics over plywood

    a. Non-Illuminated Signage, vinyl graphics over plywood located as Indicated on the Contract Drawings.

14. Bid Item No. 14: Non-Illuminated Signage, vinyl graphics over aluminum

    a. Non-Illuminated Signage, vinyl graphics over aluminum located as Indicated on the Contract Drawings.

15. Bid Item No. 15: Staging barrier 8’ high wall

    a. Protection barrier is Indicated on the Contract Drawings, Contractor shall submit an SWPP for approved location.

16. Bid Item No. 16: Demonstration and Training

    a. The District will provide this training to Contractor personnel as Indicated on the Contract Specifications.

17. Bid Item No. 17: Demo – Section of existing storage room wall

    a. Demolish and dispose partial wall of the existing Police Storage Room as Indicated on the Contract Drawings.

18. Bid Item No. 18: Demo – Existing storage door

    a. Demolish and dispose of existing Police Storage Room door as Indicated on the Contract Drawings.

19. Bid Item No. 19: Demo – Existing wall finish

    a. Demolish and dispose of existing wall as Indicated on the Contract Drawings.

20. Bid Item No. 20: Demo – Existing elevator steel support

    a. Demolish and dispose of existing elevator steel support as Indicated on the Contract Drawings.

21. Bid Item No. 21: Demo – Existing sump pumps and piping

    a. Demolish and dispose of existing sump pumps and piping as Indicated on the Contract Drawings.

22. Bid Item No. 22: Demo – Existing fire sprinkler piping, valve, etc.

    a. Demolish and dispose of existing fire sprinkler piping, valve, etc. as Indicated on the Contract Drawings.

23. Bid Item No. 23: Demo – Existing electrical power

    a. Demolish and dispose of existing electrical conduit and wires as Indicated on the Contract Drawings.

24. Bid Item No. 24: Pit Ladder

    a. Provide and install pit ladder as Indicated on the Contract Drawings.

25. Bid Item No. 25: Angle iron support sill support (sidewalk)

    a. Provide and install elevator sill support as Indicated on the Contract Drawings.

26. Bid Item No. 26: Angle iron support sill support (upper walkway)

    a. Provide and install elevator sill support as Indicated on the Contract Drawings.

27. Bid Item No. 27: Anchor w/ 3-1/4” embedment

    a. Drill into existing concrete slab and epoxy anchors for the equipment pad as Indicated on the Contract Drawings.

28. Bid Item No. 28: Expansion anchor w/ 2-1/4” embedment

    a. Drill into existing concrete slab and epoxy anchors for the equipment pad as Indicated on the Contract Drawings.

29. Bid Item No. 29: Angle iron support

    a. Provide and Install grating support at existing sump pit as Indicated on the Contract Drawings.

30. Bid Item No. 30: Grating - type W-19-4

    a. Provide and Install grating at existing sump pit as Indicated on the Contract Drawings.

31. Bid Item No. 31: Bent plate

    a. Provide and Install bent plate for roof extension as Indicated on the Contract Drawings.

32. Bid Item No. 32: Welding to plate

    a. Provide and weld plate to existing roof as indicated on the Contract Drawings.

33. Bid Item No. 33: Steel plate

    a. Provide and Install steel plate to roof structure as Indicated on the Contract Drawings.

34. Bid Item No. 34: Bolt for plate attachment

    a. Provide and Install bolts to plate attachment as Indicated on the Contract Drawings.

35. Bid Item No. 35: #4 Rebars in pads

    a. Provide and Install rebars for equipment pads as Indicated on the Contract Drawings.

36. Bid Item No. 36: #4 Dowels

    a. Provide, drill and epoxy dowels for equipment pad as Indicated on the Contract Drawings.

37. Bid Item No. 37: #3 Dowels

    a. Provide, drill and epoxy dowels for equipment pad as Indicated on the Contract Drawings.

38. Bid Item No. 38: Fiberboard

    a. Provide and Install fiberboard between equipment pad and existing wall as Indicated on the Contract Drawings.

39. Bid Item No. 39: Concrete equipment pad form work

    a. Provide form work for concrete equipment pad as Indicated on the Contract Drawings.

40. Bid Item No. 40: Concrete

    a. Provide and pour concrete for pad as Indicated on the Contract Drawings.

41. Bid Item No. 41: Gyp wall board, Type A

    a. Provide and Install type A wall board over existing metal stud as Indicated on the Contract Drawings.

42. Bid Item No. 42: Gyp wall board, Type B

    a. Provide and Install type B wall board over existing metal stud as Indicated on the Contract Drawings.

43. Bid Item No. 43: Gyp wall board, Type C

    a. Provide and Install type C wall board over new metal stud as Indicated on the Contract Drawings.

44. Bid Item No. 44: Gyp wall board, Type D

    a. Provide and Install type D wall board over new metal stud as Indicated on the Contract Drawings.

45. Bid Item No. 45: SS Corner guard

    a. Provide and Install corner guards at new corner walls as Indicated on the Contract Drawings.

46. Bid Item No. 46: SS pipe cover enclosure-horizontal 6.5” W

    a. Provide and Install SS pipe cover over existing pipes as Indicated on the Contract Drawings

47. Bid Item No. 47: SS pipe cover- vertical 8” W

    a. Provide and Install SS pipe cover over existing pipes as Indicated on the Contract Drawings

48. Bid Item No. 48: SS pipe cover enclosure-horizontal 8.5” W

    a. Provide and install SS pipe cover over existing pipes as Indicated on the Contract Drawings

49. Bid Item No. 49: Hooded dome cap and body

    a. Provide and Install hooded dome cap and body over vent line as Indicated on the Contract Drawings.

50. Bid Item No. 50: SS Pipe flashing, collar

    a. Provide and Install SS pipe flashing around vent line as Indicated on the Contract Drawings.

51. Bid Item No. 51: GSM Flashing

    a. Provide and Install GSM flashing between elevator and canopy structure as Indicated on the Contract Drawings.

52. Bid Item No. 52: GSM Counter flashing

    a. Provide and Install GSM counter flashing between elevator and canopy structure as Indicated on the Contract Drawings.

53. Bid Item No. 53: Door, frame, and hardware

    a. Provide and install door frame and hardware for the Elevator Machine Room as Indicated on the Contract Drawings.

54. Bid Item No. 54: Door replacement at Mezzanine level

    a. Provide and Install door frame only at Mezzanine Level to the Equipment Room as Indicated on the Contract Drawings.

55. Bid Item No. 55: SS Access door and frame.

    a. Provide and Install access door for clean out as Indicated on the Contract Drawings.

56. Bid Item No. 56: Concrete Waterproofing

    a. Provide and apply waterproofing at the exterior elevator shaft as Indicated on the Contract Drawings.

57. Bid Item No. 57: Fire rated sealant over backer rod

    a. Provide and Install sealant over backer rod at wall construction, top and bottom as Indicated on the Contract Drawings.

58. Bid Item No. 58: Epoxy Floor paint

    a. Provide and apply Epoxy Floor paint in elevator pit, equipment room, pump filter, and elevator machine room

59. Bid Item No. 59: Steam Cleaning

    a. Steam Clean hoistway shaft walls and elevator flooring as Indicated on the Contract Drawings

60. Bid Item No. 60: 1-1/2 HP Submersible sump pump

    a. Provide and hook up submersible sump pump in elevator pit as Indicated on the Contract Drawings.

61. Bid Item No. 61: 2” pump discharge piping

    a. Provide and hook up 2” pump discharge piping as Indicated on the Contract Drawings.

62. Bid Item No. 62: 3” pump discharge piping

    a. Provide and hook up 3” pump discharge piping as Indicated on the Contract Drawings.

63. Bid Item No. 63: Misc. pipe fittings, valves, etc.

    a. Provide and install Misc. pipe fittings, valves, etc.as Indicated on the Contract Drawings.

64. Bid Item No. 64: Sump waste water oil filter tank

    a. Provide and hook up Elevator sump waste water oil filter tank to existing plumbing system as Indicated on the Contract Drawings.

65. Bid Item No. 65: 4” Sanitary Sewer pipe

    a. Provide and hook up 4” sanitary sewer pipe to existing plumbing system as Indicated on the Contract Drawings.

66. Bid Item No. 66: 2” Sanitary vent pipe

    a. Provide and hook up 2” Sanitary vent pipe to existing plumbing system as Indicated on the Contract Drawings.

67. Bid Item No. 67: Hub drain w/ p-trap

    a. Provide and hook up Hub drain w/ p-trap to existing plumbing system as Indicated on the Contract Drawings.

68. Bid Item No. 68: Vent thru roof; flashing & vent cap

    a. Provide and hook up vent thru roof; flashing & vent cap to existing plumbing system as Indicated on the Contract Drawings.

69. Bid Item No. 69: Cold Water pipe Type K

    a. Provide and hook up cold water pipe to existing plumbing system as Indicated on the Contract Drawings.

70. Bid Item No. 70: 1/2" CW connection to existing 3/4" CW

    a. Provide and hook up 1/2" cold water pipe to existing 3/4" cold water plumbing system as Indicated on the Contract Drawings.

71. Bid Item No. 71: 1/2" shut-off valve

    a. Provide and install shut-off valve to existing plumbing system as Indicated on the Contract Drawings.

72. Bid Item No. 72: Trap primer w/ shut-off valve

    a. Provide and hook up trap primer w/ shut-off valve to existing plumbing system as Indicated on the Contract Drawings.

73. Bid Item No. 73: Condensate pump

    a. Provide and hook up condensate pump to existing plumbing system as Indicated on the Contract Drawings.

74. Bid Item No. 74: Condensate pipe with insulation

    a. Provide and hook up condensate pipe with insulation to existing plumbing system as Indicated on the Contract Drawings.

75. Bid Item No. 75: Condensate drain pipe

    a. Provide and hook up condensate drain pipe to existing plumbing system as Indicated on the Contract Drawings.

76. Bid Item No. 76: Split AC unit

    a. Provide and hook up split AC unit for Elevator Machine Room as Indicated on the Contract Drawings.

77. Bid Item No. 77: Refrigerant piping w/ insulation

    a. Provide and hook up refrigerant piping to AC unit as Indicated on the Contract Drawings.

78. Bid Item No. 78: AC unit thermostat and temperature sensor

    a. Provide and Install AC unit thermostat and temperature sensor as Indicated on the Contract Drawings.

79. Bid Item No. 79: 24x12 supply air duct

    a. Provide and install 24x12 supply air duct for AC unit as Indicated on the Contract Drawings.

80. Bid Item No. 80: 24x12 duct vanned 90 deg elbow

    a. Provide and Install 24x12 elbow duct for AC unit as Indicated on the Contract Drawings.

81. Bid Item No. 81: 8x8 duct access door

    a. Provide and install duct access door for AC unit as Indicated on the Contract Drawings.

82. Bid Item No. 82: 16x24x14 supply air plenum

    a. Provide and Install 16x24x14 supply air plenum for AC unit as Indicated on the Contract Drawings.

83. Bid Item No. 83: 18x24x24 return air/ filter plenum w/ hinged access door

    a. Provide and Install 18x24x24 return air/ filter plenum w/ hinged access door as Indicated on the Contract Drawings.

84. Bid Item No. 84: Flexible duct connector, supply, and return

    a. Provide and install flexible duct connector, supply, and return to the HVAC system as Indicated on the Contract Drawings.

85. Bid Item No. 85: Insulation supply and return 1” liner

    a. Provide and wrap duct supply and return with insulation liner as Indicated on the Contract Drawings.

86. Bid Item No. 86: Panel “P11” 227/480V, 3p, 4w 225A

    a. Provide and Install panel for 227/480V power source. Work includes feeder wires, conduit, breaker lock, labeling, etc. as Indicated on the Contract Drawings.

87. Bid Item No. 87: Panel “LA126” 120/208V, 3p, 4w 100A

    a. Provide and Install panel for 120/208V power source. Work includes feeder wires, conduit, breaker lock, labeling, etc. as Indicated on the Contract Drawings.

88. Bid Item No. 88: 30A/2P Fused disconnect switch

    a. Provide fused disconnect switches for elevator equipment, including for the elevator controller, elevator cab light, and AC unit. Work includes feeder wires, conduit, labeling, etc. as Indicated on the Contract Drawings.

89. Bid Item No. 89: 100A/3P Fused disconnect switch

    a. Provide fused disconnect switch. Work includes feeder wires, conduit, labeling, etc. as Indicated on the Contract Drawings.

90. Bid Item No. 90: 30A/3P non-fused disconnect switch

    a. Provide non-fused disconnect switches for sump pump. Work includes feeder wires, conduit, labeling, etc. as Indicated on the Contract Drawings.

91. Bid Item No. 91: 15KVA-480/120V, 3P, 4w Transformer

    a. Provide transformer to panel 11 and panel LA126. Work includes feeder wires, conduit, labeling, etc. as Indicated on the Contract Drawings.

92. Bid Item No. 92: Sump pump controller connection

    a. Provide sump pump controller connection. Work includes feeder wires, conduit, labeling, etc. as Indicated on the Contract Drawings.

93. Bid Item No. 93: Elevator controller connection

    a. Provide elevator controller connection. Work includes feeder wires, conduit, labeling, etc. as Indicated on the Contract Drawings.

94. Bid Item No. 94: Condensate Unit connection

    a. Provide condensate unit connection. Work includes feeder wires, conduit, labeling, etc. as Indicated on the Contract Drawings.

95. Bid Item No. 95: Air Handling unit connection

    a. Provide air handling unit connection. Work includes feeder wires, conduit, labeling, etc. as Indicated on the Contract Drawings.

96. Bid Item No. 96: Sump Pump (Elev #3) connection

    a. Provide sump pump connection to elevator #3. Work includes feeder wires, conduit, labeling, etc. as Indicated on the Contract Drawings.

97. Bid Item No. 97: Sump Pump (Elev #30) connection

    a. Provide sump pump connection to elevator #30. Work includes feeder wires, conduit, labeling, etc. as Indicated on the Contract Drawings.

98. Bid Item No. 98: Condensate pump connection

    a. Provide condensate pump connection. Work includes feeder wires, conduit, labeling, etc. as Indicated on the Contract Drawings.

99. Bid Item No. 99: LED Pendant mount linear fixture Type "A"

    a. Provide lighting fixtures as described in the lighting fixture schedule. Work includes connection feeder wires as Indicated on Contract Drawings.

100. Bid Item No. 100: LED Wall mount linear fixtures Type "B"

    a. Provide lighting fixtures as described in the lighting fixture schedule. Work includes connection feeder wires as Indicated on Contract Drawings.

101. Bid Item No. 101: Wall mounted light switch

    a. Provide lighting fixtures as described in the lighting fixture schedule. Work includes connection feeder wires as Indicated on Contract Drawings.

102. Bid Item No. 102: Wall mounted light switch (WP)

    a. Provide lighting fixtures as described in the lighting fixture schedule. Work includes connection feeder wires as Indicated on Contract Drawings.

103. Bid Item No. 103: Wall mounted duplex receptacle

    a. Provide lighting fixtures as described in the lighting fixture schedule. Work includes connection feeder wires as Indicated on Contract Drawings.

104. Bid Item No. 104: Wall mounted duplex receptacle (GFI)

    a. Provide lighting fixtures as described in the lighting fixture schedule. Work includes connection feeder wires as Indicated on Contract Drawings.

105. Bid Item No. 105: 2 1/2" GRS conduit

    a. Provide 2-1/2” conduit on the underside of the existing or structure. Work includes fittings, flexible conduit, conduit labels, fasteners, adapters, offsets, conduit auxiliaries, core drills, firestopping, and painting to match surrounding area.

106. Bid Item No. 106: 1 1/4" GRS conduit

    a. Provide 1-1/4” surface mounted conduit. Work includes fittings, conduit labels, fasteners, adapters, offsets, conduit auxiliaries, core drills, firestopping, and painting to match surrounding area.

107. Bid Item No. 107: 1" GRS conduit

    a. Provide 1” surface mounted conduit. Work includes fittings, conduit labels, fasteners, adapters, offsets, conduit auxiliaries, core drills, firestopping, and painting to match surrounding area.

108. Bid Item No. 108: 3/4" GRS conduit

    a. Provide 3/4” surface mounted conduit. Work includes fittings, J-Box, flexible conduit, conduit labels, fasteners, adapters, offsets, conduit auxiliaries, core drills, firestopping, and painting to match surrounding area.

109. Bid Item No. 109: #4/0 AWG, THWN

    a. Provide #4/0 AWG twisted pair wires pulled inside conduit/raceway for existing main switch board to panel “P11”.

110. Bid Item No. 110: #12 AWG, THWN

    a. Provide #12 AWG twisted pair wires pulled inside conduit/raceway for XFMER “X126”, SP controller, SP motor, and non-fused disconnect switch.

111. Bid Item No. 111: #10 AWG, THWN

    a. Provide #10 AWG twisted pair wires pulled inside conduit/raceway for condensing unit pit lights, and pit receptacle.

112. Bid Item No. 112: #8 AWG, THWN

    a. Provide #8 AWG twisted pair wires pulled inside conduit/raceway.

113. Bid Item No. 113: #6 AWG, THWN

    a. Provide #6 AWG twisted pair wires pulled inside conduit/raceway for panel “P11”, fused disconnect switch, controller, and XFMER “X126”

114. Bid Item No. 114: #4 AWG, THWN

    a. Provide #4 AWG twisted pair wires pulled inside conduit/raceway for existing main switch board to panel “P11”.

115. Bid Item No. 115: Smoke damper connection

    a. Provide smoke damper connection. Work includes feeder wires, conduit, labeling, etc. as Indicated on the Contract Drawings.

116. Bid Item No. 116: Fire Alarm Control Panel (FACP)

    a. Provide fire alarm control panel. Work includes feeder wires, conduit, labeling, etc. as Indicated on the Contract Drawings.

117. Bid Item No. 117: Fire Alarm Heat Detector wall mounted (WP)

    a. Provide fire alarm heat detector. Work includes feeder wires, conduit, labeling, etc. as Indicated on the Contract Drawings.

118. Bid Item No. 118: Fire Alarm Heat Detector ceiling mounted

    a. Provide fire alarm heat detector ceiling mounted. Work includes feeder wires, conduit, labeling, etc. as Indicated on the Contract Drawings.

119. Bid Item No. 119: Fire Alarm Smoke Detector ceiling mounted

    a. Provide fire alarm smoke detector ceiling mounted. Work includes feeder wires, conduit, labeling, etc. as Indicated on the Contract Drawings.

120. Bid Item No. 120: Fire Alarm Control Module

    a. Provide fire alarm heat detector. Work includes feeder wires, conduit, labeling, etc. as Indicated on the Contract Drawings.

121. Bid Item No. 121: Monitor Module

    a. Provide monitor module. Work includes feeder wires, conduit, labeling, etc. as Indicated on the Contract Drawings.

122. Bid Item No. 122: Fire Alarm #16 AWG cable, Type THWN

    a. Provide #16 AWG pair wires pulled inside conduit/raceway as Indicated on the Contract Drawings.

123. Bid Item No. 123: 24x12 Fire smoke damper

    a. Provide and Install 24x12 fire smoke damper with operator motor for AC unit as Indicated on the Contract Drawings.

124. Bid Item No. 124: 24x24 Fire smoke damper

    a. Provide and Install 24x12 fire smoke damper with operator motor for AC unit as Indicated on the Contract Drawings.

125. Bid Item No. 125: 3/4" GRS Conduit

    a. Provide 3/4” surface mounted conduit. Work includes fittings, J-Box, flexible conduit, conduit labels, fasteners, adapters, offsets, conduit auxiliaries, core drills, firestopping, and painting to match surrounding area.

126. Bid Item No. 126: 1-1/2” Fire sprinkler piping

    a. Provide fire sprinkler piping Sch 40. Work includes fittings, support, and hangers. As Indicated on the Contract Drawings.

127. Bid Item No. 127: 1” Fire sprinkler piping

    a. Provide fire sprinkler piping Sch 40. Work includes fittings, support, and hangers. As Indicated on the Contract Drawings.

128. Bid Item No. 128: 1” Seismic pipe loop

    a. Provide seismic pipe loop with seismic break away hanger. Work includes fittings, support, and hangers. As Indicated on the Contract Drawings.

129. Bid Item No. 129: FS to (E) 4” WSP connection

    a. Provide and connect new 1-1/2” fire sprinkler piping to existing 4” wet fire sprinkler piping work includes fittings, support, and hangers. As Indicated on the Contract Drawings.

130. Bid Item No. 130: FS piping connection from (E) to new

    a. Provide and connect existing fire sprinkler piping to new 1” fire sprinkler piping. Work includes fittings, support as Indicated on the Contract Drawings.

131. Bid Item No. 131. Drain outside Mechanical Room

    a. Provide and connect 1” drain to outside Mechanical Room. Work includes fittings, support as Indicated on the Contract Drawings.

132. Bid Item No. 132: Drain to hub drain in Custodial Room.

    a. Provide and connect 1” drain to hub drain in Custodial. Room. Work includes fittings, support as Indicated on the Contract Drawings.

133. Bid Item No. 133: Sprinkler heads in Elevator

    a. Provide and connect sprinkler heads in elevator pit wall. Work includes fittings, support as Indicated on the Contract Drawings.

134. Bid Item No. 134: Sprinklers Tee and drain plugs in Elevator pits

    a. Provide and connect tee and drain plug in elevator pits. Work includes fittings, support as Indicated on the Contract Drawings.

135. Bid Item No. 135: Isolation/ shut-off valve w/tamper switch in Existing Mechanical Room

    a. Provide and connect isolation/ shut-off valve w/tamper switch for indication and inspectors test and drain assembly at the fire alarm area in existing mechanical room as Indicated on the Contract Drawings.

136. Bid Item No. 136: Isolation/ shut-off valve w/ tamper switch in (E) Custodial and Trash Room.

    a. Provide and reconnect isolation/ shut-off valve w/tamper switch for indication and inspectors test and drain assembly at the existing custodial and trash room as Indicated on the Contract Drawings.

137. Bid Item No. 137: Flow switches

    a. Provide and Install flow switch as Indicated on the Contract Drawings.

138. Bid Item No. 138: Fire Alarm programing and testing

    a. Provide programming, commissioning, testing and documentation of existing Fire Alarm System after reconnection of work.

139. Bid Item No. 139: Communication Interface Cabinet

    a. Provide communication cabinets for housing of field components, including switches, copper patch panels, wire management, power configuration, grounding, and mounting/installation

140. Bid Item No. 140: Elevator Interface Cabinet

    a. Provide elevator cabinets for housing of field components, including SCADA system modules, power supplies, wire management, power configuration, grounding, and mounting/installation

141. Bid Item No 141: 24x12x8 Nema wall/column mounted pullbox

    a. Provide wall or column mounted pull station, red metal surface work includes installation and wiring as Indicated in the Contract Documents.

142. Bid Item No. 142: 12x12x8 Nema wall mounted pullbox

    a. Provide wall mounted pull station, red metal surface work includes installation and wiring as Indicated in the Contract Documents.

143. Bid Item No. 143: Telephone outlet dual jack Cat 6

    a. Provide telephone outlet dual jack Cat-6 from patch panel at equipment room to courtesy telephone outlet at elevator #3 and elevator #30. Work includes cable connection as Indicated in the Contract Documents.

144. Bid Item No. 144: CCTV Camera

    a. Provide CCTV Camera at elevator landing #3 and elevator landing #30. Work includes installation and wiring as Indicated in the Contract Documents.

145. Bid Item No. 145: Thermostat conduit and wiring to SCADA

    a. Provide thermostat conduit. Work includes wiring to SCADA as Indicated in the Contract Documents.

146. Bid Item No. 146: Patch panel Cat 6

    a. Provide communication cable 24 port CAT 6 patch panel at Equipment Room to existing CAB 25. Work includes wiring into existing Train Control Room as Indicated in the Contract Documents.

147. Bid Item No. 147: CAT 6 cabling

    a. Provide Category 6 cabling, including terminations, connectors, cable supports, patch cords, and labeling as Indicated in the Contract Documents.

148. Bid Item No. 148: CAT 6A

    a. Provide Category 6A ethernet cable for network interface as Indicated in the Contract Documents.

149. Bid Item No. 149: 48 STR-MM-FO

    a. Provide communication cable 48 STR-MM-FO from fiber patch panel at communication interface cabinet to existing BART FEC-01 cabinet in the Train Control Room, including terminations, connectors, cable supports, and labeling as Indicated in the Contract Documents.

150. Bid Item No. 150: 25 pair Control Cable

    a. Provide 25 pair control cable for elevator #3 and Elevator #30, including terminations, connectors, cable supports, and labeling as Indicated in the Contract Documents.

151. Bid Item No. 151: 2" GRS Conduit

    a. Provide 2” conduit for 25 pair control cable. Work includes fittings, conduit labels, fasteners, adapters, offsets, conduit auxiliaries, core drills, firestopping, and painting to match surrounding area.

152. Bid Item No. 152: 1" GRS Conduit

    a. Provide 1” surface mounted conduit. Work includes fittings, conduit labels, fasteners, adapters, offsets, conduit auxiliaries, core drills, firestopping, and painting to match surrounding area.

153. Bid Item No. 153: 3/4" GRS Conduit

    a. Provide 3/4” surface mounted conduit. Work includes fittings, J-Box, flexible conduit, conduit labels, fasteners, adapters, offsets, conduit auxiliaries, core drills, firestopping, and painting to match surrounding area.

154. Bid Item No. 154: #12 AWG

    a. Provide #12 AWG twisted pair wires pulled inside conduit/raceway for SCADA interface cabinets elevator #3 and elevator #30 as indicating in the Contract Documents.

155. Bid Item No. 155: CCTV surveillance camera programming and testing

    a. Provide programming, commissioning, pretest, BART final acceptance testing and project record documentation, software, O&M manuals and as-builts after completion.

156. Bid Item No. 156: Demo – Elevator #03

    a. Demolition of elevator cab #03 shall include hydraulic oil from existing tank, pump unit, tank unit, controller and starter, wiring, unused conduits and electrical boxes in machine room, main power wiring and conduit between mainline disconnect and controller, see Contract Document for additional items.

157. Bid Item No. 157: Demo – Elevator #30

    a. Demolition of elevator cab #30 shall include hydraulic oil from existing tank, pump unit, tank unit, controller and starter, wiring, unused conduits and electrical boxes in machine room, main power wiring and conduit between mainline disconnect and controller, see Contract Document for additional items.

158. Bid Item No. 158: Install Modernize Elevator #03

    a. Provide and install elevator cab #03 shall include pump unit, tank unit, controller and starter, wiring, conduits and electrical boxes in machine room, main power wiring and conduit between mainline disconnect and controller, as Indicated in the Contract Documents.

159. Bid Item No. 159: Install Modernize Elevator #30

    a. Provide and install elevator cab #30 shall include pump unit, tank unit, controller and starter, wiring, conduits and electrical boxes in machine room, main power wiring and conduit between mainline disconnect and controller, as Indicated in the Contract Documents.

160. Bid Item No. 160: Elevator Cab SS finish #03

    a. Provide and install stainless steel wall panels, ceiling panels door panel, and handrail, #4 finish for elevator cab #03 as Indicated in the Contract Documents.

161. Bid Item No. 161: Elevator Cab SS finish #30

    a. Provide and install stainless steel wall panels, ceiling panels door panel, #4 finish for elevator cab #03 as Indicated in the Contract Documents.

162. Bid Item No. 162: Elevator spray-on flooring

    a. Apply spray-on flooring to elevator floor cab as Indicated in the Contract Documents.

163. Bid Item No. 163: Equipment O&M Manuals

    a. Manuals shall be provided for all equipment and systems furnished under the Contract that require maintenance, operation, or modification including testing and training equipment. Manuals shall also be provided for other items, such as finishes, when specified in the Contract Documents.

164. Bid Item No. 164: Spare Parts

    a. Provide specific spare parts as specified in the individual Sections of the Contract Documents.

165. Bid item No. 165: Equipment as Built & Final Drawings.

    a. The final Submittal of record ("as built") drawings shall be stamped "Project Record ", signed and dated by the Contractor, and shall be delivered to the Engineer prior to the Final Inspection as Indicated in the Contract Documents.

166. Bid Item No. 166: Equipment Basic Training Class

    a. The Contractor shall provide training manuals to supplement the O&M Manuals Indicated in the Contract Documents.

167. Bid Item No. 167: Equipment Advance Training Class

    a. The Contractor shall provide all special tools, equipment, training aids, and other materials required for the training of BART personnel as Indicated in the Contract Documents.

168. Bid Item No. 168: Maintenance Services

    a. The Contractor shall provide one year of Maintenance Services in accordance with Section 14 24 00, Article 1.12B.

169. Bid Item No. 169: Final Cleanup and Site Restoration

    a. Prior to Final Inspection by the District, and after all construction work is essentially complete, thoroughly clean station facilities and structures, utilizing professional building cleaners where appropriate. Restoration of existing work shall successfully duplicate undisturbed adjacent finishes, colors, textures, and profiles as Indicated in the Contract Specifications.

1.05 ALLOWANCES: Delete Article 1.05B in its entirety and substitute therefor the following:

B. Specific Allowances: Specific Allowances Indicated in the Bid Schedule of the Bid Form include the following:

1. Partnering Program: An Allowance is Indicated in the Bid Schedule to provide funds for paying for Partnering Program in accordance with Supplemental Condition SC 8.3 Contractor shall pay these expenses and request reimbursement in its next request for payment application.

2. Differing Site Conditions: An Allowance is Indicated in the Bid Schedule for unforeseen work due to differing site conditions in accordance with General Conditions Article GC4.6.

3. RWP Training: An Allowance is Indicated in the Bid Schedule for District provided

Roadway Worker Protection (RWP) training. Contractor personnel must pass a test in order to obtain RWP certification in accordance with Contract Specifications Section 01 35 14, Operating System Interface.

4. Operating System Access Delays: An Allowance is included in the Bid Schedule for District caused delays in accordance with Contract Specifications Section 01 35 14, BART Operating System Interface.

5. Elevator #30 Roof and Roof Drain: An Allowance is listed in the Bid Schedule of the Bid Form to provide funds to inspect the existing roof and roof drain. Repair as required see drawing A402.

6. Permits Licenses and Fees: An Allowances is Indicated in the Bid Schedule to provide funds for paying for permits.

7. District Caused Delays: An Allowance is Indicated in the Bid Schedule to provide funds for possible compensation under General Conditions, Article GC8.4.3 for certain delays.

8. Handling and Disposal of Hazardous Material: An Allowance is Indicated in the Bid Schedule to provide funds for hazardous waste. Store and dispose of according to Contract requirements and local regulations.

9. Incentive Bonus: An Allowance is Indicated in the Bid Schedule to provide funds for possible Contractor Incentive Bonus based on performance, in accordance with Section 01 20 00, Article 1.09 INCENTIVE BONUS

10. Watchperson Activities: An Allowance is Indicated in the Bid Schedule to provide funds for Watchperson activities. A Watchperson shall have the means to notify the crew and shall be required for Work in the Track Zone.

1.09 INCENTIVE BONUS: Add Article 1.09:

A. The Contractor may be eligible to receive one of the following Incentive Bonuses based on its performance as follows:

1. If the Contractor obtains the Department of Industrial Relations (DIR) Permit and returns either one of the two elevators to service in 190 Days or less after the elevator was first removed from service, it will be eligible to receive a 5% bonus based on the total amount of the Base Bid excluding all Allowances.

2. If the Contractor obtains the Department of Industrial Relations (DIR) Permit and returns both of the two elevators to service in 190 Days or less after the elevators were first removed from service, it will be eligible to receive a 10% bonus based on the total amount of the Base Bid excluding all Allowances.

3. If the Contractor obtains the Department of Industrial Relations (DIR) Permit and returns both of the two elevators to service in 175 Days or less after the elevators

were first removed from service, it will be eligible to receive a 15% bonus based on the total amount of the Base Bid excluding all Allowances.

4. If the Contractor is eligible for an Incentive Bonus in described paragraph 1, 2, or 3 above, it will be eligible to receive only the Incentive Bonus described in the respective paragraph and shall not be eligible for either of the other two. Should Contractor meet the criteria for more than one Incentive Bonus as described above, Contractor shall receive only one bonus, which will be the most favorable Bonus for which it is eligible. Under no circumstances shall the Contractor receive more than one Incentive Bonus.

B. Work performed to meet Incentive Bonus must not compromise quality of Work or safety standards, or any other contractual obligations. The Contractor must ensure that all Work meets or exceeds the standards set forth in the Contract Documents. The Contractor shall continue to ensure compliance with all applicable laws and regulations related to the Work.

C. Payment of the Incentive Bonus to the Contractor shall be contingent upon the satisfactory completion of the Work, as solely determined by the District, and Acceptance of all deliverables by the District. Should the District determine that the Contractor is eligible and entitled to an Incentive Bonus, the District will issue a Change Order deducting the applicable Incentive Bonus payment amount from the Bid Schedule Allowance for Incentive Bonus.

D. The District reserves the right to withhold any and all of the Incentive Bonus payments if, in its sole discretion, it determines that the Contractor has failed to meet established criteria set forth in this section or the Work does not meet required standards per the Contract Specifications.

E. The District reserves the right to cancel any and all Incentive Bonuses at any time in its sole discretion.

F. Under no circumstances will the Incentive Bonus Payment exceed $1,000,000.00, as Indicated in the Incentive Bonus Payment Allowance in the Bid Schedule.

END OF SECTION 01 20 00

This page was intentionally left blank.

SECTION 01 31 19

PROJECT MEETINGS

The provisions of BART Facilities Standards, Standard Specifications, Release R3.1.2, dated April 2018, Section 01 31 19, Project Meetings, shall apply to the Work.

END OF SECTION 01 31 19

This page was intentionally left blank.

SECTION 01 32 16

CONSTRUCTION PROGRESS SCHEDULES

The provisions of BART Facilities Standards, Standard Specifications, Release R3.1.2, dated April 2018, Section 01 32 16, Construction Progress Schedules, shall apply to the Work.

END OF SECTION 01 32 16

This page was intentionally left blank.

SECTION 01 32 33

PHOTOGRAPHIC DOCUMENTATION

The provisions of BART Facilities Standards, Standard Specifications, Release R3.1.2, dated April 2018, Section 01 32 33, Photographic Documentation, shall apply to the Work.

END OF SECTION 01 32 33

This page was intentionally left blank.

SECTION 01 33 00

SUBMITTAL PROCEDURES

The provisions of BART Facilities Standards, Standard Specifications, Release R3.1.2, dated April 2018, Section 01 33 00, Submittal Procedures, shall apply to the Work.

END OF SECTION 01 33 00

This page was intentionally left blank.

SECTION 01 33 23

SHOP DRAWINGS, PRODUCT DATA AND SAMPLES

The provisions of BART Facilities Standards, Standard Specifications, Release R3.1.2, dated April 2018, Section 01 33 23, Shop Drawings, Product Data and Samples, shall apply to the Work.

END OF SECTION 01 33 23

This page was intentionally left blank.

SECTION 01 35 14

OPERATING SYSTEM INTERFACE

The provisions of BART Facilities Standards, Standard Specifications, Release R3.1.2, dated April 2018, Section 01 35 14, Operating System Interface, are superseded by these Contract Specifications.

PART 1 - GENERAL

1.01 SECTION INCLUDES

A. Requirements for accessing the BART Operating System

B. BART Operating Rules and Procedures (OR&P)

C. Training

1.02 MEASUREMENT AND PAYMENT

A. Roadway Worker Protection (RWP) certification training and recertification will be provided by the District and paid for under the related Allowance as Indicated on the applicable Bid Item in the Bid Schedule of the Bid Form. The District will not pay for worker hours spent in retraining and retesting required for Roadway Worker Protection certification.

B. Training time for District-provided training other than Roadway Worker Protection certification, as described in Article 1.11 herein, will be paid for under the related Allowance as Indicated on the applicable Bid Item in the Bid Schedule of the Bid Form. Contractor-developed and executed training is not included.

C. Watchperson activities will be paid under the related Allowance Indicated on the applicable Bid Item in the Bid Schedule of the Bid Form.

D. Separate measurement or payment will not be made for the remainder of the work required under this Section. All costs in connection with this work will be considered to be included with the related item of work in the Bid Schedule of the Bid Form, or incidental to the Work.

1.03 DEFINITIONS

A. BART Operating Envelope: That portion of the BART System that has controlled access, including fan and transition structures, train control, communication and traction power facilities and equipment, and BART Right-of-Way. For illustration of certain BART Operating Envelope configurations, refer to Attachments 1 through 4.

B. BART Operating System: BART owned or operated facilities.

C. BART Right-of-Way (ROW): That portion of the BART System within protective fencing (including yards), tunnels, tubes, subways, stations or aerial structures wherein trains operate.

D. Clear of Track: A location with at least 44 inches between you and the nearest running rail when a walkway with a handrail or similar type or means of support is present (wall, fences or in the case of yards and local control areas, a stationary train appropriately protected from movement). For aerial structures, Clear of Track is when personnel are on the aerial walkway and the EIC declares that the area is cleared for on-rail vehicles to traverse. For all other conditions, Clear of Track is defined as a location with at least 72 inches (6 feet) between you and the nearest running rail. These dimensions are for straight track; on curved track, additional clearance needs to be added for car body overhang.

E. Clearance: An official authorization which transfers control of an area or equipment to perform an activity subject to clearance rules.

F. Clearance Verification: A verification by the EIC to ensure that items constructed or modified within the Track Zone meet the minimum clearance envelope. Clearance criteria are specified in the BFS and shall be included in the SSWP, with detailed identification of each item to be verified and the method by which the clearance will be verified.

G. Detailed Site-Specific Work Plan (SSWP): A program, plan, and schedule prepared and submitted by the Contractor and approved by the District, which accurately describes and illustrates the manner in which Work shall be accomplished within the District-approved Windows. See Attachment 5.

H. Employee-In-Charge (EIC): A Roadway Worker who is responsible for ensuring Roadway Worker safety, including use of Roadway Worker protections, at a Jobsite within the BART Operating Envelope, and who is authorized to accept and execute Work Orders. Work within the BART ROW will require a BART employee to function as the EIC. For work outside of the BART ROW, a District representative may function as the EIC. The Contractor shall not function as the EIC. At the District's discretion, more than one EIC may be assigned to a work area when the District deems the area too large to be adequately controlled by a single EIC. In such situations, a primary EIC will be designated to accept and execute Work Orders.

I. Global Site-Specific Work Plan (GSSWP): A notification prepared and submitted by the Contractor to the Engineer for all work within the BART Operating System, which provides all information as shown in the Attachment 6.

J. Maintenance Service Schedule (MSS): A schedule for all work requiring BART personnel in support of activities.

K. Return to Service Checklist: A checklist showing required activities to return the BART system to service.

L. Revenue Hours: Hours during which passenger carrying trains operate as defined by the current schedule and which may be modified by the BART Operations Control Center (OCC).

M. Roadway Worker: A person currently certified by the District's Roadway Worker Protection (RWP) certification training program.

N. Safety Escort: A Roadway Worker employed by the Contractor and who is responsible for up to five (5) persons in the ROW who are not qualified as Roadway Workers. The Safety

Escort shall participate in the job safety briefing; possess and be competent to use a District-supplied working radio; stay in continuous contact with the EIC; and ensure that escorted individuals remain safe, stay within the limits of the work area, and do not violate OR&P rules and procedures. A Safety Escort is allowed to perform other work.

O. Track Zone: An area within 72 inches (6 feet) of the outside rail on both sides of the track.

P. Watchperson: A Roadway Worker, whose sole duty is to remain in a position to provide effective warning in compliance with the 15-second rule to workers of approaching rail transit vehicles, including trains or any on-rail equipment; who does not perform or assist in any other work aside from the Watchperson duty; possess and is competent to use a District-supplied working radio, and who remains Clear of Track of all active track(s). A Watchperson shall have the means to notify the crew and shall be required for all work in the Track Zone.

Q. Window: District-approved time period during which Clearances are issued for construction purposes.

R. Work Orders: A formal communication between the EIC and the control center having jurisdiction to establish authorization to work.

S. Work Week: The time period starting with 0001 hours Monday and ending at 2359 hours of the following Sunday.

1.04 SUBMITTALS

A. General: Refer to Section 01 33 00, Submittal Procedures for submittal requirements and procedures.

B. Detailed Site-Specific Work Plan (SSWP): The detailed SSWP shall be Submitted no later than 42 calendar Days prior to the scheduled start of the work addressed by the SSWP. Each resubmittal of the SSWP shall require an additional 42 calendar Days of review time.

C. Global Site-Specific Work Plan (GSSWP): Contractor shall submit GSSWP to the Engineer for approval.

D. Training Plan: Submit training plan and training materials for Contractor training in accordance with Article 1.11 Training herein.

E. Maintenance Support Schedule (MSS): Request at least 90 Days before the subject work is scheduled to begin.

1.05 ACCESS INTO THE BART OPERATING SYSTEM

A. Access to the BART Operating System shall be in accordance with BART publication, “Standard Procedure for Access to the BART Operating System” (Management Procedure – 31). A copy of Management Procedure 31 will be provided by the District upon request.

B. Global Site Specific Work Plan (GSSWP): The GSSWP shall remain in effect for the duration of the Work unless any element of the GSSWP is changed, at which time the Contractor shall resubmit.

C. Detailed Site Specific Work Plan (SSWP)

1. All Work that may affect the BART Operating System, requires encroachment within the BART Operating Envelope, station paid areas, or has the potential to impact mission-critical system requires a SSWP to be approved by the Engineer prior to starting the work. The Contractor shall ensure that its Work shall not cause interruption in BART train and station operations and that the BART tracks, patrons, BART employees, and Contractor, and other personnel are protected from injury or damage in accordance with the provisions in the "Standard Procedure for Access to BART Operating System" and in the OR&P.

    a. Prior to commencement of the Work within the BART Operating Envelope, the Contractor shall install temporary horizontal protective shields between the work area and the patron areas within the station in accordance with Contract Specifications Section 03 11 14, Falsework. shields shall be in accordance with Contract Specifications Section 06 10 00, Rough Carpentry, and fire retardant treated. Details for the shields shall be included in the SSWP. When the protective shields are in place in accordance with the SSWP as approved by the Engineer, Work may be performed during normal daytime hours.

2. Mission-critical systems include:

    a. Station or trackway fire water supply lines or appurtenances

    b. Station fire alarm conduits, cables, duct banks, or appurtenances

    c. Traction power conduits, cables, duct banks, or appurtenances

    d. Station electrical conduits, cables, duct banks, or appurtenances

    e. Train control and communications conduits, cables, duct banks or appurtenances

    f. Emergency egress pathways

    g. Fare collection equipment

3. The Contractor shall furnish all labor, materials, and equipment as required to perform and complete the work in the limited time available. The Contractor shall maintain the approved schedule in the SSWP.

4. Detailed SSWPs that may impact normal functioning of any part of the Operating System shall include a detailed schedule for each activity in the SSWP. The schedule shall show the expected work progress for each activity on an hourly basis. Depending on the complexity of the work, the work schedule may be required to be broken down into 15-minute increments through the period covered by the SSWP. The schedule shall include a time at which all activities planned under the SSWP will be completed. Failure of the Contractor to complete the scheduled activities by the planned time or to put in place an approved contingency plan so that the system is available for operations at the approved completion time shall make the Contractor liable for

liquidated damages as specified in Contract Specifications Section 01 11 00 – Summary of Work, for each hour or part of an hour that the operation of the system for passenger revenue service is delayed. These liquidated damages are distinct and separate from liquidated damages specified for failure to complete the Contract on time in Contract Specifications Section 01 11 00 - Summary of Work.

5. The SSWP shall include a brief description of the work; specific request of the SSWP; work location; work date and hours that detail the expected progress of the work on a daily and hourly basis; description of the BART Operating System affected by the work; safety procedures and requirements; detailed breakdown of each activity; material, labor, operating and physical data for all equipment to be used; contingency plan; BART personnel needed to complete work; and responsible Contractor and Program personnel that BART can contact in case of emergency at all times. The following requirements, as applicable, shall be described in detail and supplemented with plans and details in the SSWP. Sample SSWP available upon request.

   a. For Contractor's operation adjacent to the BART Operating Envelope, the Contractor shall include in the SSWP complete description of equipment positioning and storage, construction methods that utilize equipment, warning devices, equipment positioning during construction, and equipment storage. Cranes, jibs, booms, or similar equipment capable of fouling the BART Operating Envelope are prohibited within 10-feet of the edges of the BART Operating Envelope unless the equipment is oriented such that if the equipment or boom fails, the equipment or boom falls away from the BART Operating Envelope or at a minimum, not fouling the BART trackway. On a case-by-case basis, at the discretion of the Engineer, the Contractor may demonstrate to the satisfaction of the Engineer, the use of other means to prevent the equipment or boom from fouling the trackway such as precautionary warning devices.

   b. SSWP is required for any work including, but not limited to, excavation, potholing, and retrofit construction less than 5-feet from 34.5 kV conduits, cables, or equipment at the elevated bents; BART train control rooms; traction power substations; switching and gap breaker stations; station agent's booths; Fare Collection Equipment; paths of travel and exits; and the BART station utilities as specified in Contract Specifications Section 01 35 14, Article 1.05 C.14 herein. The SSWP shall detail how the equipment, utilities/facilities will be protected, supplemented with drawings, ensuring no damage during excavation, potholing, and retrofit construction, particularly for high voltage (more than 480 volts) equipment/utilities. High voltage equipment/utilities shall not be relocated and shall be protected in place. The SSWP shall identify and provide details of the excavation equipment to be used and shall describe in detail the excavation process.

   c. For Work that may interfere with the existing BART Operating System utilities or other BART utilities/facilities, the Contractor shall develop an SSWP to work around the interference that may include temporary modifications to these utilities/facilities, except high voltage utilities shall not be modified and shall be protected in place. The Contractor shall obtain the assistance of engineers actively licensed in the State of California, in the disciplines corresponding to the modified utilities/facilities, in developing the SSWP. The SSWP shall detail the temporary modification, such as temporary relocation, prior to construction and

the re-installation of the utilities/facilities to existing condition after the completion of the work.

d. As a part of the SSWP, the Contractor shall submit a Station Equipment Protection Plan that details the protection of existing Station ventilation system equipment and facilities as specified in Contract Specifications Section 01 35 14, Article 1.08 B herein that are sensitive to construction hazards including, but not limited to, dust, debris, vibration, water, moisture, bumps, and impact from flying debris.

e. The SSWP shall include procedures corresponding to the requirements specified in this Contract Specifications Section for the relevant utilities/facilities.

6. The SSWP shall include contingency plans for putting the system back in operation in case of an emergency and in case the Contractor fails to perform and complete the Work in accordance with the approved schedule. Contingency plans shall address the various stages of construction.

7. The SSWP shall be submitted to the Engineer at least 41 Days prior to the start of Work. The Engineer may request explanations and changes to the SSWP to conform the SSWP to the Contract requirements. If the SSWP is not acceptable to the Engineer, the Contractor shall revise the SSWP to make it acceptable. The Contractor's resubmittal of revised SSWPs may take up to an additional 42 Days for approval.

8. Not less than one week prior to the scheduled start of work, the Contractor will be informed if the submitted SSWP is acceptable. Once the SSWP is approved, the Contractor shall assemble the resources necessary to perform the work represented by the SSWP. The necessary resources shall be available and demonstrated ready for use on the Friday of the work week. At that time, the Engineer will make a final decision as to whether or not the work is to proceed as planned or be canceled. The prime consideration will be the state of readiness of the Contractor. However, BART operation and maintenance plans may also affect the decision.

9. District reserves the right to delay approval of the SSWP until applicable Submittals required for the Work in the SSWP have been approved.

10. References specified herein to weeks mean the week starting with 0001 hours Monday and the next six Days of the proposed work schedule.

11. Approval of the SSWP does not relieve the Contractor from fulfilling Contract requirements.

12. A copy of the District approved SSWP shall be on site during the work performed.

13. The SSWP shall remain in effect for the duration of the Work. When changes are required, the Contractor shall resubmit a revised SSWP for the District's approval prior to continuation of Work.

14. The following types of work require an SSWP and a Window:

a. Establishment of defined construction areas within the BART Operating Envelope including installation of construction fence and deactivation/cutover and maintenance of BART operating system.

b. Resumption of BART operations within defined construction areas following completion of construction including reactivation/cutover and testing BART operating systems and removal of construction fence.

c. Movement of construction equipment, materials and personnel within seven feet of active track centerline.

d. Where Contractor's crane booms or jibs, concrete pump booms and other similar equipment will swing out over tracks during normal work operations, an SSWP will be required. In developing this SSWP, the Contractor shall pay particular attention to describing the safeguards to be employed, e.g., how loads will be prevented from entering the operating envelope, how crane hooks, lifting gear and the like will be kept away from BART equipment and installations. Where crane loads will enter the operating envelope, a Work Window will be required.

    1. Where the Contractor's equipment could, through overturning or falling, accidentally enter into the operating envelope, the Contractor shall pay particular attention to ensure the stability of the equipment.

    2. When construction is conducted above tracks, a plan for such operations shall be submitted by the Contractor and approved by the Engineer that demonstrates how the operating tracks will be protected from falling objects or debris, from water or other liquids that might otherwise drop onto tracks or BART vehicles.

e. Work on electrical or computer systems that could affect the BART Operating System.

f. Any Work impacting the existing fire protection system, within the Station and away from the Station, including removal, relocation, and/or replacement, which require the fire protection system to be (temporarily) removed from service during Non-Revenue Hours only. The Contractor is responsible for providing temporary connections or other means of modifications to the existing fire protection system, as approved by the Engineer, to ensure continuous operation of the fire protection system during Revenue Hours.

g. In addition to the work specified in Contract Specifications Section 01 35 14, Article 1.05 C herein, any work including, but not limited to, excavation and potholing that may impact or is less than 5-feet from Station utilities, mechanical and plumbing, fire protection, electrical, lighting, Fare Collection Equipment, communication, security, and alarm systems.

h. Installation and removal of temporary horizontal protective shields and removal of barriers that require SSWP during installation.

i. Power circuit breakers off and on for BART electric signs, intersection electric signs or any other transit organization's electric signs.

j. Power circuit breakers off and on for lighting, receptacles, or other service operating at 110V volts and above.

k. Performance of any work on destination signs as specified in the Contract Documents.

l. Concrete chipping or demolition by the Contractor to locate conduits or piping embedded in the concrete.

m. Fire alarm electrical system outages as specified in the Contract Documents.

n. CCTV security cameras (BART police approval is also required).

o. PA, intercom, or the BART telephone systems.

p. Piping for fire water systems.

D. A minimum of one Watchperson is required for each work area within the Track Zone. Additional Watchpersons are required if one Watchperson is unable to provide effective warning in compliance with the 15-second rule for all personnel. Watchpersons shall have a District-supplied working radio in their possession. The Watchperson shall not transmit on the radio except when acknowledging an EIC's instruction or during an emergency. The Contractor shall provide Watchpersons as required by this specification and by SSWP requirements. Watchpersons shall remain in place at all times when personnel are in the Track Zone.

E. Employee in Charge (EIC) Responsibilities:

1. To oversee the operational safety of Contractor activities and to ensure that those activities do not affect the safety of the BART Operating System.

2. To halt Contractor activities immediately if they pose a threat to the safety of the BART Operating System or the public.

3. To remain on the Jobsite at all times in a position to adequately observe Contractor activities within their assigned work area. If the EIC determines that he or she is unable to adequately observe Contractor work activities, the EIC must suspend work and immediately notify BART Operations Control Center (OCC) and the designated BART Supervisor.

4. To ensure that BART Operating Envelope restrictions during revenue hours are strictly enforced. Such restrictions may only be modified when alternate measures (i.e., special train detection equipment such as portable shunts or optical sensors) have been approved by BART Engineering and Safety Departments or when OCC has allocated a track exclusively to construction activities and single tracking has been established.

5. To ensure that construction equipment operating adjacent to BART's Operating Envelope is situated and restrained so that it will not damage BART facilities or violate BART Operating Envelope restrictions.

6. To order a stop to operations if a condition is noted that could compromise equipment stability within or outside the Operating Envelope and which has the potential to affect the safety of the BART Operating System.

7. To be familiar with the planned Contractor activities and to obtain necessary Clearances / Access Authorizations and protections for those activities.

8. To possess or have immediately available a copy of the approved System Access (Track Allocation) Work Request Form and Site Specific Work Plan/Interim Operating Plan and checklist applicable to Contractor activities.

9. To inspect the work area and ensure that BART facilities/equipment are safe for revenue service before a work area is released to put back into service. This includes verifying that all Contractor material, tools and equipment have been removed from the BART Operating Envelope or properly secured and that all personnel are clear.

10. To ensure that all provisions of the OR&P are complied with.

11. To have adequate communications equipment on-site including a trunk radio, cellular phone and/or PABX phone. Communications equipment must be successfully tested before work begins, and operation of the communication equipment must not violate BART Operating restrictions. (See Operating Bulletin Procedure Maintenance. Rule 1333 on use of cellular phone).

12. To immediately notify OCC and the designated supervisor when any Contractor activity threatens to affect the safety of the BART Operating System and to display stop signals to any approaching train if there is an imminent hazard to safe train operations.

13. To report any accidents, injuries, rule violations, violation of safe work practices or unapproved construction activities to OCC and the designated BART supervisor.

14. To conduct a job safety briefing with all Contractor personnel prior to any District access and to complete the assigned daily reports accurately and completely.

15. The EIC cannot function as the Safety Escort without prior approval of the Engineer.

F. System Access/Track Allocation Committee

1. The System Access/Track Allocation Committee (SAC) is a standing BART committee that controls the System Access and Track Allocation process by which work in the BART Operating System is authorized. The SAC authorizes the work to be scheduled to gain access to the BART Operating System. The SAC meets each Wednesday to consider and approve work to be performed during the Work Week following the meeting.

2. Work in the BART Operating Envelope requires the issuance of formal Work Orders, which must be pre-authorized through the approval of a Track Allocation Request. Work outside of the BART Operating Envelope but within the BART Operating System requires a Track Allocation Request to be submitted as an “Advisory” notification. No Work may be permitted on BART property without an approved Track Allocation Request.

3. Contractors shall submit each individual request for access to the BART Operating System to the Engineer in writing no later than Thursday before the SAC meeting. The request shall include actual hours that work will be performed and required support by BART forces, including the number of EICs needed. The District will not approve access request without an approved detailed SSWP or GSSWP, as applicable.

4. The necessary resources to perform the work represented by the SSWP or GSSWP shall be available and demonstrated ready for use on the Friday prior to the Work Week. After verification of the availability of required resources and confirmation of an approved SSWP and access request, the Engineer will issue a final decision as to whether work will proceed as planned.

5. For work within the BART Operating Envelope the Contractor may not enter the Jobsite until authorization is obtained by the EIC. For work outside of the BART Operating Envelope, the District Representative or Contractor shall notify the control center having jurisdiction immediately prior to entering the Jobsite and immediately after departing.

1.06 BART OPERATING RULES AND PROCEDURES

A. Activities within the BART Operating System shall comply with the Operating Rules and Procedures Manual (OR&P). A copy of the current BART OR&P will be made available to the Contractor by the District upon request. All activities within BART’s operating envelope shall comply with the OR&P. Violations of the OR&P will subject the Contractor to prompt exclusion from the Jobsite until the Contractor demonstrates knowledge of proper compliance procedures to the satisfaction of the District. Such exclusion from the Jobsite will not be grounds for any additional compensation nor for any extension of the Contract completion time.

1.07 RETURN TO SERVICE CHECKLIST

A. In accordance with the District’s policy, a Return to Service Checklist shall be completed prior to the return of any safety critical systems to service. The Contractor shall support the District and its representatives in preparing and implementing the Return to Service Checklist to ensure the elimination or mitigation of identified potential hazards. A Return to Service Checklist is provided as part of the SSWP template.

B. For any structure constructed by the Contractor within the Track Zone, Clearance Verification must be completed prior to the return of any safety critical systems to service. The Contractor shall remain on site and immediately available until clearance is verified by the EIC, train inspection has been completed, and all Work Orders and Clearances have been cleared by the control center having jurisdiction.

1.08 REQUIREMENTS FOR WORK NEAR EXISTING BART UTILITIES/ FACILITIES

A. General: The following are specific requirements for construction pertaining to the safety of workers, protection of BART utilities and equipment, facilities, and prevention of interference with the BART Operating System.

B. Work area requirements:

1. Contractor personnel shall display identification badges at the Jobsite in accordance with Contract Specifications Section 01 35 53, Identification and Security.

2. All Work shall be in accordance with Contract Specifications Section 01 57 00, Temporary Controls, particularly dust and noise, and Contract Specifications Section 01 74 14, Cleaning.

3. The Contractor shall protect existing structures, facilities, signage, finishes, utilities, fixtures, devices, and equipment not designated for modification. The Contractor shall notify the Engineer immediately of all elements damaged or impacted by the Contractor's activities, and shall repair and/or restore damaged elements to pre-construction conditions at no cost to the District.

4. Unless approved by the Engineer, Station utilities, facilities, signage, elevators, escalators, fixtures, devices, equipment, exits, and paths of travel must remain operational/functional during Revenue Hours. The Contractor shall not interrupt and alter the exits and paths of travel, particularly, the ADA features. Tripping hazards to exits and paths of travel shall be prohibited. Any and all proposed modifications to the above-specified items shall be submitted in the Work Plan/SSWP to the Engineer and are subject to the Engineer's approval.

5. Access to automatic fare collection gates and ticket vending machines, station agent booths, train control rooms and mechanical and electrical rooms must be protected and maintained at all times. For access to these rooms, facilities and any other BART equipment blocked by excavations or other obstructions, a temporary fire-resistant non-metallic access platform shall be placed over the excavation or other obstructions that meets OSHA standards with handrails and provides a minimum width to allow BART's electrical service carts, with a minimum load capacity of 500 pounds, access to the facility at all times. The SSWP covering the planned work shall describe this temporary fire-resistant non-metallic access platform.

   These equipment and rooms, other than the fare collection gates and ticket vending machines, as Indicated on the Contract Drawings, shall be maintained in operating conditions, temperature and air flow, and free from dust, moisture, and water generated from construction.

6. Station Agent Booth: At all times, the Contractor shall employ both active and passive dust control measures as well as noise control measures per Contract Specifications Section 01 57 00, Temporary Controls. The Contractor shall temporarily relocate signage prior to construction and re-install existing signage prior to completion of construction. The Contractor shall maintain the line of sight of the station agent from the station agent booth by adjusting the protection barriers and relocating CCTVs. The Contractor shall maintain air conditioning during the construction period.

7. Stairs and Escalators: The Contractor shall provide and maintain temporary lighting for escalators and stairs to provide access to BART passengers during construction. A clear pedestrian pathway and visible signage shall be provided and maintained.

   No work requiring lockout/tagout of the escalators, such as needing access into the escalator pit or limiting the safe use of the escalators by the patrons, will be allowed without the Submittal and approval of a detailed SSWP that requires the approval of the escalator/elevator group in BART Operations.

8. Fare Gates and other AFC Equipment: The Contractor shall coordinate construction activities so that these activities do not interfere with BART's fare gate operations. A clear pedestrian pathway and at least a 15-foot-long queuing space measured from the center line of the fare gate will be provided. Additionally, construction activities shall not interfere with the operation of all other AFC equipment, including but not limited to, Ticket Vending Machine, Adfare Machines, Bill to Bill Changers, Parking Validation machines, and Bus Transfer Machines.

9. Restrooms: Operation and access to the restrooms shall be maintained unless otherwise Indicated on the Contract Drawings. In the event that the Contractor is unable to maintain the operation and access to the restrooms, the Contractor shall provide temporary restrooms at its own expense, subject to approval by the Engineer.

10. Break Room: Operation and access to the break room shall be maintained unless otherwise Indicated on the Contract Drawings. In the event that the Contractor is unable to maintain the operation and access to the break room, the Contractor shall provide a temporary break room at its own expense, subject to approval by the Engineer.

11. Platform: Erection and dismantling of the work platform shall not be permitted during peak revenue hours. The work platform shall comply with Cal/OSHA requirements and shall be designed for exterior exposure for wind loading. Protection barriers shall be firmly attached to the bottom of the work platform to prevent materials, debris, and tools from falling off the platform.

    a. At areas exposed to the weather, the work platform shall be in accordance with Contract Specifications Section 06 10 00, Rough Carpentry, and fire retardant treated.

    b. At areas not exposed to the weather, the work platform shall be in accordance with Contract Specifications Sections 05 10 00, Cold-Formed Metal Framing and 09 29 00, Gypsum Board; and using fire-rated gypsum board.

12. The Contractor shall ensure that any runoff water and mist from its operations is controlled such that the runoff and mist will not come into contact with or cause damage to any Station equipment or facilities. The Contractor is responsible for maintaining the Jobsite and the Station in a clean and dry condition at all times from its operations, particularly the Station exits and paths of travel. The Contractor shall ensure that there is no runoff from its operations entering the track drains or ballasted trackway, Station facilities, the substations, switching stations, and gap breaker stations.

13. Gasoline or diesel engines are not allowed inside or in close proximity of the Station such that the exhaust from these engines causes discomfort to the patrons and the station agent as determined by the Engineer.

14. When performing saw cuts, floor cutting, demolition, joint installation, and other construction activities near the exits and the paths of travel inside the Station and in the vicinity of the Station, the Contractor shall provide protection barriers as specified in Contract Specifications Section 01 35 14, Article 1.10 herein and other protective measures as approved by the Engineer to protect the patrons and pedestrians. When the solid barriers block the visibility of the station agent, the Contractor shall provide closed-circuit TV with monitor(s) installed in the Station Agent's booth.

15. Contractor shall provide protective measures as approved by the Engineer on flooring adjacent to the work inside the station or where flooring will otherwise be impacted by the access of the construction equipment and materials.

16. Prior to work including, but not limited to, excavation/potholing less than five (5) feet from underfloor/buried circuitry essential to revenue operations, if possible the Contractor shall provide a temporary "fly-around" (bypass) circuit, connecting the train control room and the area of work to replace the existing circuitry taken out of service during construction. Such "fly-around" circuit work must be included in SSWP and the SSWP must be approved prior to the circuitry work. Prior to completion of the work, the Contractor shall remove the "fly-around" and restore the existing circuitries to service. The Contractor is responsible for installing/removing the "fly-around" circuit from the area of work to the face of the corresponding circuitry panel inside the train control room. BART is responsible for connecting/removing the circuit to the corresponding circuitry inside the panel.

17. Extra care must be exercised when uncovering underfloor/buried conduits and piping. Conduits and piping carrying high voltage circuits shall not be relocated and shall be protected in place. For underfloor/buried conduits and piping of known depth, the Contractor shall partial sawcut or core drill no deeper than 3 inches above the shallowest underfloor/buried conduit or piping, followed by chipping using small hand-held tools. Uncovering underfloor/buried conduits and piping of unknown depth shall proceed with chipping by small hand-held tools only. Conduits or piping containing circuits over 120 volts shall be shut off during excavations unless the piping or conduits are protected by concrete ductbanks.

18. During excavation, the Contractor shall immediately bring to the attention of the Engineer, existing electrical metallic or other conduits or piping that are found to be corroded so that the Engineer can determine in a timely manner whether replacement or encasement with split casing is required, prior to encasement in concrete overlay or bent cap reinforcement. If requested by the Engineer, cost for this additional work shall be paid for as an Allowance for Differing Site Conditions in accordance with Contract Specifications Section 01 20 00, Price and Payment Procedures.

19. Existing pressurized water piping shall be relocated before installing bent cap concrete reinforcement unless otherwise Indicated on the Contract Drawings.

20. Prior to encasement in concrete overlay, split casing shall be applied to all existing pressurized water pipes.

21. When boom-type equipment is operated adjacent to the BART operating envelope, and could potentially intrude into the envelope, a dedicated spotting person (“spotter”) shall be provided during the operation of such equipment. The spotter shall visually monitor the operation of the equipment, and shall immediately notify the equipment operator when the equipment is being operated in a manner that is likely to lead to part of the equipment intruding into the BART operating envelope. The spotter shall have the authority to order cessation of the equipment’s operation. The spotter may have other duties, but may not perform such other duties when spotting is in progress.

1.09 SECURITY

A. The Contractor is responsible for maintaining the security of the Jobsite and reporting to the BART Police Department on all matters pertaining to security within the Station and BART right-of-way on all matters pertaining to security. Any temporary modifications to the existing security system shall be submitted in the work plan/SSWP to the Engineer for approval prior to work.

B. For all wall, window, exit, door, and security fence features that are being removed during construction, the Contractor shall provide temporary security barriers with equal security functionality to the removed security elements. No openings such as due to absence of a wall, window, door, coiling grille door, fencing shall be left uncovered or unattended overnight. The Contractor shall coordinate with the Engineer to maintain security of the station when the station is closed or when the Contractor is not at the Jobsite locations. The Contractor shall maintain the line of sight of the station agent from the station agent booth by adjusting the protection barriers and relocating CCTVs.

1.10 PROTECTION BARRIERS

A. The SSWP shall include site plans showing electrical equipment, utilities, or facilities to be protected and the proposed location of the protection barriers, with dimensions. The barriers shall wrap around the adjacent sides (minimum height of eight (8) feet) of the electrical equipment, utilities, or facilities for a minimum of eight (8) feet, horizontally, of the length of the equipment, utilities, or facilities if the equipment, utilities, or facilities are less than eight (8) feet in length.

B. The SSWP shall also include detailed design drawings of the protection barriers, including location of hinged lockable access panels for BART personnel access to existing doors, rooms, and equipment. At locations identified by the District, the Contractor shall allow for quick access (hinged or bolted) to areas where emergency access is required (certain bolted panels on the electrical equipment). All doors, meters, gauges, and access panels shall remain accessible at all times to BART by use of hinged panels or removable panels.

C. Protection barriers shall be a minimum of eight (8) feet high and shall be installed along the length of the face of the electrical equipment, switchgear, utilities, or facilities facing the work in order to protect the workers or patrons. The barriers shall be new at the time of installation and shall be replaced if worn or weathered as Directed by the Engineer.

1. At areas exposed to the weather, the barriers shall be at least 5/8 inch thick plywood and shall comply with Contract Specifications Section 06 10 00, Rough Carpentry, and fire retardant treated.

2. At areas not exposed to the weather, the barriers shall be at least 1-inch thick gypsum board and shall comply with Contract Specifications Sections 05 40 00, Cold-Formed Metal Framing and 09 29 00, Gypsum Board; and using fire-rated gypsum board.

D. Protection barriers shall not touch the conduits, cables, equipment, utilities, or facilities and shall be self-supporting. The barriers shall not be attached to track or platform girders. In addition, for elevated work, the protection barriers shall be firmly attached to the bottom and side of the working platform to prevent materials, debris, and equipment from falling off the platform.

E. For equipment and utilities that are critical to the BART operating system, as Indicated on the Contract Drawings, or equipment and utilities inside the substations, gap breaker stations, or switching stations, the Contractor shall Install signs or paint “EQUIPMENT/UTILITIES HANDLE WITH CARE” or “CAUTION HIGH VOLTAGE” as appropriate on the surface of the protection barriers.

F. Protection barriers shall not interrupt and alter the ADA requirements of the exits and paths of travel. The barriers shall not cause tripping hazards at exits or in paths of travel.

1.11 TRAINING

A. Personnel attending District administered training must first receive proper District issued ID badge in accordance with Section 01 35 54, Identification and Security.

B. For work within the BART Operating Envelope:

1. Roadway Worker Protection (RWP) certification training: The District will provide this training to Contractor personnel, as required. The training consists of 40 hours of instruction on safe roadway practices and radio proficiency. The District will administer testing on these subjects at the conclusion of the training period. An individual who fails the testing for safe roadway practices must pass a retest in order to be certified. An individual who fails only the radio proficiency test will take supplementary radio instruction, and must pass a retest of radio proficiency in order to be certified. If the worker fails either retest, the District will disqualify the worker from eligibility for Roadway Worker certification. Worker hours for retraining and retesting shall not be charged to the District. The Roadway Worker certification is valid for two years. Prior to expiration of the certification, the individual must attend an 8-hour recertification class and must pass tests for safe roadway practices and radio proficiency. Supervisors and Health and Safety Representative(s) (HSR) are required to be RWP certified.

2. Designated Contractor Roadway Workers are responsible for training employees of the Contractor and its Subcontractors who have not completed the RWP training and who are scheduled or expected to perform work within the BART Operating Envelope. This training shall be at a minimum, four hours in length. These employees are required to have successfully completed training within the previous 24 months before being allowed to work within the BART Operating Envelope. The Contractor shall keep records of those successfully completing the course, and make such records available for review by the District upon request.

Designated Contractor Roadway Workers shall prepare a training plan and course materials for review and approval by the Engineer that shall include at a minimum the training information provided below:

a. Hazards of the required job duties and the methods to safely carry out those duties. Examples: third rail, running rail, active vs protected tracks, revenue vs non-revenue.

b. Proper safety procedures to be used to adequately address those hazards. Examples: where to and where not to step, which track and when entry to that track can be made. No horse-play. Rule 1101 of the OR&P applies to Contractors.

c. Importance of complying with all relevant safety rules. Examples: PPE, time, location, equipment, facility limits.

d. On-track safety rules and procedures that Contractor personnel are required to follow. Examples: meaning of blue light, red light, District approved physical barrier, no refuge zone.

e. Railroad track and the surrounding space within which on-track safety is required. Examples: fifteen second rule, no refuge zone, clear of track.

f. Compliance with on-track safety instruction given by persons responsible for on-track safety functions. Examples: role of EIC, role of the Watchperson, and no use of Personal Electronic Device (PED).

g. Signals given by a Watchperson and the procedures upon receiving a train approaching warning. Examples: emergency protocol, horns, whistle, stop, evacuation, time to secure the work area and leave.

3. Contractor personnel shall be trained as Roadway Worker(s) in sufficient numbers to supply an adequate number of Watchpersons and Safety Escorts to conduct the work.

C. For work outside the BART Operating Envelope:

1. The District will provide training, and retraining every 24 months, for up to four supervisory-level personnel, one of whom shall be the HSR. The Contractor shall have at least one of these supervisors on the project at all times when working within the BART Operating System. The course is 8 hours long, and the trainees must pass the required exams to successfully complete the course. Certification as a Roadway Worker will satisfy the requirements of this Article.

2. Supervisory personnel trained in accordance with Article 1.11 C.1 herein shall be responsible for training employees of the Contractor and its Subcontractors who have not completed the training and who are scheduled or expected to perform work within the BART Operating System. The training shall be a minimum of two hours in length. Employees are required to have successfully completed training within the previous 24 months before being allowed to work within the BART Operating System. The

Contractor shall keep records of those successfully completing the course, and make such records available for review by the District upon request.

3. Supervisors shall prepare a training plan and course materials for review and approval by the Engineer that shall include as a minimum, topics provided by the District. The District will provide these topics as part of the 8-hour training.

1.12 BART MAINTENANCE SUPPORT

A. The BART or commercial Utility systems modification work performed by the Contractor that shall require support from the BART maintenance department and SSWP includes, but not limited to, the following:

1. Certain temporary BART utility work as specified in the Contract Documents.

2. Re-installation of certain BART utilities to permanent use as specified in the Contract Documents.

3. 110 volts (unless otherwise approved by Engineer and BART maintenance) and above, and high voltage electrical power system work as specified in the Contract Documents.

4. Power on and off 110 volt and above circuit breakers (unless otherwise approved by Engineer and BART maintenance).

5. Power on and off escalators and elevators.

6. Performance of any work on train control circuits as specified in the Contract Documents.

7. Performance of any work on Automatic Fare Collection (“AFC”) equipment or wiring as specified in the Contract Documents.

8. Performance of any work on radio antennas or radio circuits as specified in the Contract Documents.

9. Performance of any work on BART or commercial fiber optic, fire detection and alarm systems, control and indication, equipment or cables as specified in the Contract Documents. Work on Public Address (“PA”), CCTV, or telephone system is not included in this requirement.

10. Turning water systems on and off including main water supply or fire water supply.

11. Performance of any work on Heating, Ventilating and Air Conditioning (“HVAC”) systems for train control rooms, electrical substations, or station agent’s booths.

12. Access into substations, gap breaker stations, control panels, and final inspections of electrical and mechanical systems.

1.13 SCHEDULE

A. The Contractor shall include and update the Contract Schedule and the Four-Week Work Plan with the requested detailed SSWP. The Contractor is solely responsible and will not be granted time delay or additional compensation for the delay of the BART approval of SSWP request if the Contractor fails to include and update the Contract Schedule and the Four-Week Work Plan with the requested SSWP.

PART 2 – PRODUCTS

Not Used

PART 3 – EXECUTION

Not Used

END OF SECTION 01 35 14

ATTACHMENTS TO FOLLOW

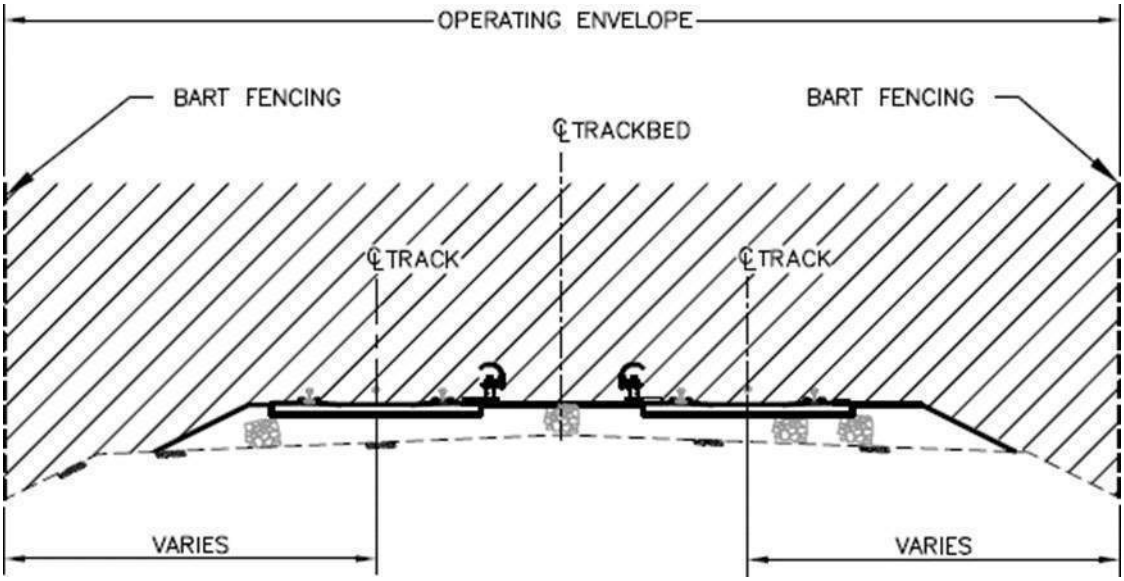

Attachment 1: BART Operating Envelope- Grade

Track Source: IL013361

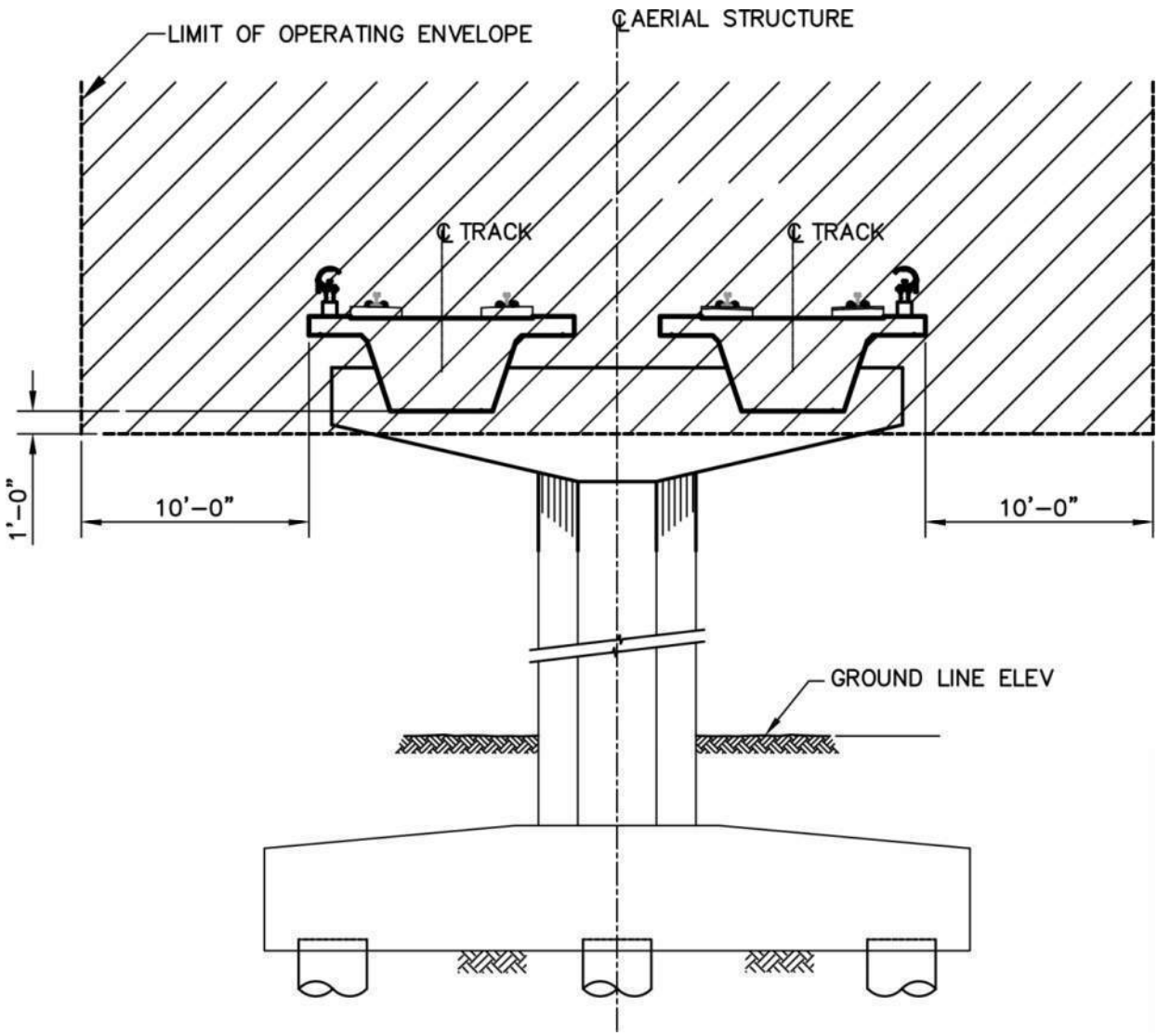

Attachment 2: BART Operating Envelope - Aerial Track

Source: IL013362

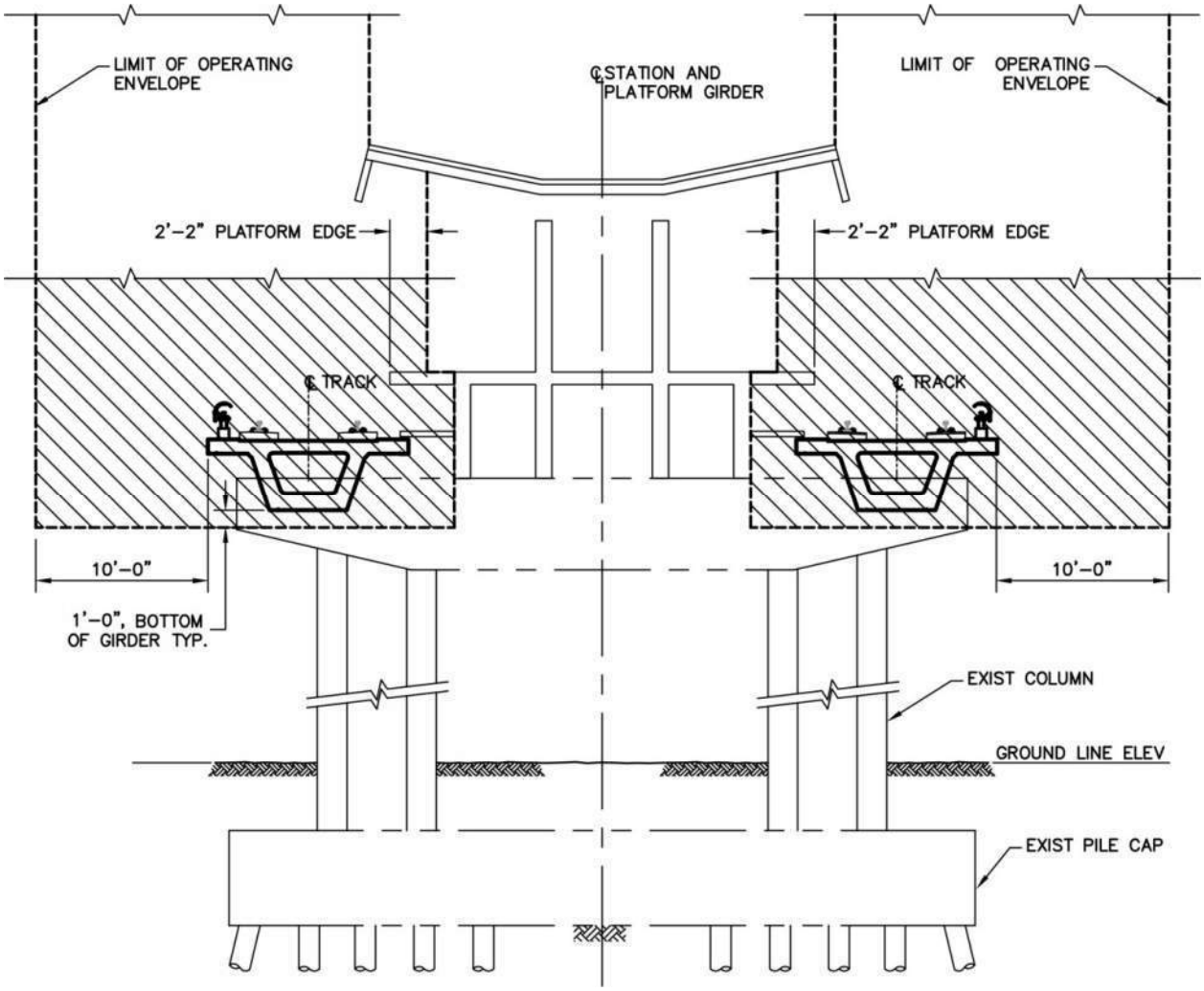

Attachment 3: BART Station Operating Envelope - Outside Track

Source: IL013363

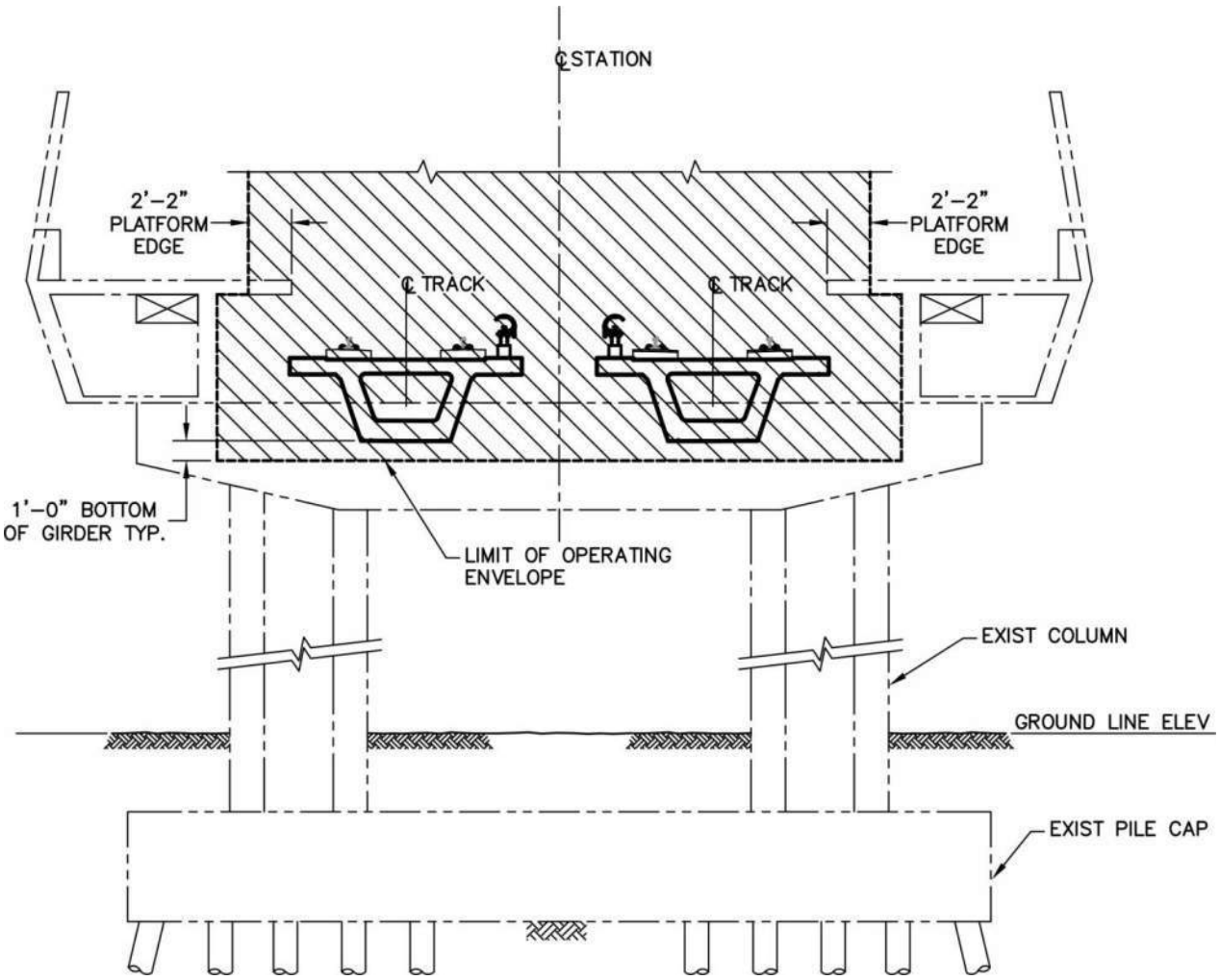

Attachment 4: BART Station Operating Envelope - Inside Track

Source: IL013364

ATTACHMENT 5:
EXAMPLE OF DETAILED SITE SPECIFIC WORK PLAN

* As applicable

This page was intentionally left blank.

* As applicable

SAN FRANCISCO BAY AREA RAPID TRANSIT DISTRICT

[Contract Name]

CONTRACT # 15NL-140

Company Logo or Name Date Submitted

SITE SPECIFIC WORK PLAN (SSWP) #*[X.X]*:

ADDENDUM LETTER (IF APPLICABLE)

[Submittal number]

BART Station/Facility Location Designation and/or Milepost (MP) location of work

---

* As applicable

Submitted By: _____ _____
Contractor *[Requester]* Date

Approved By: _____ _____
BART *[Resident Engineer/Oversight Manager]* Date

Approved By: _____ _____
BART *[Project Manager or Principal Engineer]* Date

Approved By: _____ _____
BART *[Engineering]* * Date

Approved By: _____ _____
BART *[Maintenance]** Date

Approved By: _____ _____
BART *[Operations Control Center]* Date

Approved By: _____ _____
BART *[Transportation]* Date

Approved By: _____ _____
BART *[System Safety]* Date

Approved By: _____ _____
BART *[Operations Planning]* * Date

Approved By: _____ _____
BART *[BART PD]** Date

Approved By: _____ _____
BART *[Operations Liaisons]** Date

Approved By: _____ _____
BART *[District Architect]** Date

Approved By: _____ _____
BART *[Other BART Department]** Date

Approved By: _____ _____
BART *[Rolling Stock and Shops]** Date

Approved By: _____ _____
BART *[M&E System Access Committee Chair]* Date

* As applicable

Project: *[project name]*
Contract No.: 15NL-140
Contractor: *[Contractor's Name]* **Site Specific Work Plan: #** *[X.X]* **Addendum Letter:** *[X]*

Work Location: *[Specify by facility location designation, nearest cross streets and milepost]*

Work Hours (Military Time):

- Weekday: Monday thru Friday from *XXXX* hrs to *XXXX* hrs
- Saturday: *XXXX* hrs to *XXXX* hrs *(if applicable)*
- Sunday: *XXXX* hrs to *XXXX* hrs *(if applicable)*

I. DESCRIPTION OF WORK

{Define the general scope of work covered in this SSWP}

II. BART SYSTEM IMPACT

a. WILL THE WORK IN THIS SSWP BE LOCATED?

i. IN AN AREA OPEN TO THE PUBLIC?
- YES NO

ii. WITHIN THE BART RIGHT-OF-WAY (ROW)?
- YES NO

iii. WITHIN SIX FEET FROM THE NEAREST RUNNING RAIL (TRACK ZONE)?
- YES NO

iv. IN AN AREA IN CLOSE PROXIMITY TO UTILITIES TIED TO THE SYSTEM?
- YES NO

v. IN PROXIMITY TO THE BART ROW WHERE ACTIVITIES MAY POTENTIALLY IMPACT OR ENTER THE BART ROW?
- YES NO

b. Other BART Operating Facilities Potentially Affected by this Work
{List facilities and brief description of impact or potential impact}

III. SAFETY

a. Shift will start with a Safety Meeting for a minimum of 15 minutes, which must include the assigned EIC(s). All Safety Meetings shall include (at a minimum):

i. All personnel must attend and discuss the Job Hazard Analysis (JHA) in order to identify all possible dangers or hazards in the work zone or job site.

ii. Explanation of emergency evacuation procedures and egress points.

iii. If work is in the ROW, or may affect the ROW, personnel must also be advised to be diligent when working in the near vicinity of the third rail and its cover board, to prevent injury, death, damage and delay to revenue service. Personnel shall not step, stand, sit or recline on the third rail cover board. Personnel shall not stand, sit or step on the running rail.

iv. BART Employee in Charge (EIC) will conduct a Site Specific Safety Briefing prior to starting any work activity. All individuals that enter the worksite during the shift shall receive a Safety Briefing by the EIC.

v. All personnel are required to sign the EIC Safety Briefing Roster.

vi. The EIC will notify the crew when it is safe to begin work.

b. The approved Health and Safety Representative (HSR) or Assistant Health and Safety Representative (AHSR) will be onsite throughout the work shift.

c. If the BART EIC or District Representative sees any unsafe condition, he/she will stop the work and work will not re-start until the EIC gives the clear signal.

Contractor shall assist with restoring safe conditions as required.

d. All employees will wear required personal protective equipment. Mandatory PPE includes

i. BART approved safety vest
ii. BART approved hard hats
iii. Eye protection
iv. Work boots
v. Other PPE

* As applicable

e. BART Operations Rules & Procedures (OR&P)

f. Rule 1101: The rules contained in this book apply to all District employees, Contractors and others working on BART property.Types of Work Clearance (Work Orders) that may be Requested in Work Area

(select only those that apply to this SSWP):

i. Category A: Non Track Zone Access: Defined as Access to mainline right-of- way where work does not encroach in the Track Zone (within six feet of outside rail on both sides of track).

ii. Category B: Access to Track Zone: Defined as Access to the mainline right-of- way where work will encroach in the Track Zone (within six feet of outside rail on both sides of track).

iii. Category C: Access to Yard Tracks: Defined as authorization to work a designated section of track(s) with specific limits in which protection from train movement has been provided.

iv. Category F: Equipment/Facilities Clearance: Defined as an authorization to work on remotely controlled and monitored equipment, or work that may affect the operation of trains.

v. Category P: Physical Barrier Clearance: Defined as authorization to access and work within the Right-of-Way in an area when the Roadway Workers are separated from the Track Zone by a District-approved physical barrier.

vi. Category BL: Blanket Work Area: Defined as mainline track areas between specified interlocking gates or between interlocking gates and end of line stations where train movement is prohibited on all tracks and access is controlled by a Blanket Area Supervisor.

vii. Advisory Work: Work conducted in the Operating System that does not require the issuance of formal Work Orders. The control center having jurisdiction must be contacted by phone or radio before advisory work may commence.

g. Work Area Protection (OR&P Rule 6328)*: All Work Areas shall be restricted to a maximum speed of 27 MPH to include all adjacent tracks not separated by a District approved physical barrier. Determine whether the work to be conducted is Category A, B or C. The work area is protected from train movement by one or more of the following:

i. Route prohibits

* As applicable

ii. Forced track occupancies or zero speed codes

iii. By operating trains in the area in manual mode and issuing movement instructions, restrictions and holds for train movement or Confirmed Hold

iv. Restricted speed

v. The insertion of switch machine cranks or flags

vi. Notification of reverse running trains shall be provided to Roadway Workers

vii. Blue Lights

h. Type of Electrical Protection Needed (Safe Clearance)*

i. Roadway Worker Protection

j. All Roadway Worker Protection rules will be strictly enforced. A Roadway Worker must have completed the BART Roadway Worker Protection Training (40 hours) and must have BART ID badge displaying "orange sticker" to validate that worker has completed training. Employee in Charge (EIC) will be on site at all times and shall lead and conduct job briefing.

i. When escorting non-RWP Trained personnel in the trackway under work orders, one (1) Roadway Worker shall be responsible for a party of not more than five (5) non-RWP Trained individuals. Additional Roadway Workers are required for larger groups with a maximum of five (5) non-RWP Trained individuals per Roadway Worker. The responsible Roadway Worker shall stay with all non-RWP Trained personnel and possess a District-approved working radio at all times. The responsible Roadway Worker(s) shall not cancel the work orders until all personnel are physically clear of the work area. (OR&P Rule 6335).

ii. A minimum of one Watchperson will be required for each work area within the Track Zone. Additional Watchpersons will be necessary if one Watchperson is unable to provide effective warning in compliance with the 15-second rule for all personnel. All Watchpersons shall have a District-supplied working radio in their possession. The Watchperson shall not transmit on the radio except when acknowledging an EIC's instruction or during an emergency. The Contractor shall provide Watchpersons as required by this specification and by SSWP requirements. Watchpersons must remain in place at all times when personnel are in the Track Zone and shall not leave the area unless directed by the EIC. A Watchperson may not perform or assist in any

* As applicable

other work aside from the Watchperson duty, and remains Clear of Track of all active track(s).

iii. Red and Blue Lights shall be placed at work site according to OR&P Section V, Subsection 5700, Rule 5701 & 5702.

iv. {*Contractor shall specify the number of Watchpersons that will be assigned to* each *shift, including their approximate location and the area where red and blue lights will be placed to protect the work area*}.

IV. REQUESTED BART SUPPORT (examples)

a. Employee-in-Charge (EIC): required for work in the BART Operating Envelope or SSI Locations.

b. *Certified Track Inspector*

c. *Electricians, Communications, Grounds, Facilities etc.*

d. *Test trains (4 cars minimum)*

e. *District Equipment*

V. WORK DETAILS

a. Governing Codes and References

i. ***[BFS x.x]***

ii. ***[other associated with this work]***

b. **Work Scope** *{Define the scope of Work, schedule, cut-in requirements including requirements to restore or return facility and/or appliance to revenue service and any modifications to the Operating System between the start and finish of such work. Provide a step-by-step procedure on how the work is to be accomplished. This should be detailed enough to allow a non-engineer individual to understand the work that is being done. Include a general description of all activities necessary to perform any work within, or in close proximity to the Operating Envelope, or interfacing with remotely controlled or monitored systems. Detailed (structural, electrical, mechanical, etc.) calculations are not required – they should be approved beforehand and noted in the SSWP that they were reviewed and approved by the appropriate engineer.}*

c. **Work Schedule Breakdown** *{Provide times associated with the steps, as appropriate. Depending on the complexity of the Work, the work schedule may be required to be broken down into 15-minute increments through the period covered by the SSWP. Indicate critical decision points*

* As applicable

milestones where the work must be completed or points of no-return. Indicate which steps are to be conducted during non-revenue hours. Indicate if an "Electrical Safe Clearance" is required. Indicate if and when train service will be affected.}

d. Equipment and Manpower *{List the equipment and man power associated with completing the work described, (e.g. back hoes, cranes, drills, Operators, Carpenters)}*

VI. CONTINGENCY PLANS

- Should any unauthorized person enter the site, they will be escorted out of the site and the BART Representative and BART Police notified.

- Upon request by proper authority the Operations Control Center (OCC), BART Police Department, and/or the BART Safety Department, etc. the Contractor will stop work immediately. The Contractor will return the site to a safe condition expeditiously and vacate the area as quickly and as safely as possible, lending all reasonable support to the restoration of revenue service if so requested.

- The Contractor will immediately notify the BART Representative of any fires or other emergencies, who will then notify BART OCC. If the BART Representative is incapacitated, the HSR will notify BART OCC and 911 or BART Police. The work will be stopped and work area will be secured from any unauthorized individuals until emergency services arrive.

- These procedures may be amended, with concurrence from the Resident Engineer who will notify Operations Liaisons and the assigned BART Engineer, as needed to further the work and additionally safety requirements may be considered and implemented. The goal is to complete the work while ensuring the safety of BART patrons and employees and the integrity of the BART System.

- If patrons or pedestrians ask any questions, they will be referred to BART Community Relations. {*Contractor*} will not have any unauthorized communication with residents or patrons.

{Contractor to identify what could go wrong. Identify all likely hazards. What actions will be taken in the rare, extreme and or unlikely event something does go wrong. What outside assistance might be necessary? Will this assistance be available if this situation occurs in the middle of the night?}

Examples include –

- *Should a Contractor notice any damage to the third-rail cover board,*

* As applicable

immediately notify the EIC who will inform the proper authorities.

- *Contractor working in the Train Control Room noticing an unusual condition (e.g.: water, excessive heat, objects, etc.) shall immediately notify the EIC, who will notify OCC.*
- *Ensure that any items, including barriers, that have a potential to accidentally foul the trackway are secured prior to leaving the Jobsite each day. Should any items foul the trackway during the work shift, Contractor shall immediately notify the BART Representative.*
- *Man-Lift could tip over into the BART security fence. Solution – Before booming up to assist the crane with the column form, have machine pointed as shown on the drawings to prevent entering the BART security fence.*

VII. OWNER AND GENERAL CONTRACTOR INFORMATION

[OFFICE, 24-HOUR CONTACT, RESPONSE TIME]

Contractor:

Project Manager:	*510-XXX-XXXX*
Project Superintendent:	*510-XXX-XXXX*
Health and Safety Representative:	*510-XXX-XXXX*

BART:

Project Manager:	
Resident Engineer:	
Operations Liaisons:	*510-464-4945*
Operations Control Center	*510-834-1297*
BART Police	*510-464-7000*
BART Police Watch Commander	*510-464-7020*
BART Project Duty Officer	*510-910-5164*

* As applicable

EMERGENCY SERVICES

BART Police	24-HR Emergency 510.464.7000
California Highway Patrol	24-Hr Emergency 911
***[Local]* Police**	Non-Emergency
***[Local*] Police**	Emergency XXX.XXX.XXXX
***[Local]* Fire Department**	24-HR Emergency XXX.XXX.XXXX or 911
Medical Clinic – *[Site Specific]*:	XXX.XXX.XXXX
Medical Hospital – *[Site Specific]*:	XXX.XXX.XXXX
BART Operations Control Center (OCC)	510.834.1297

* As applicable

VIII. DRAWINGS/ATTACHMENTS/CUT-SHEETS/PHOTOGRAPHS

[Emergency Flow Chart, pertinent drawings, attachments, cut-sheets and/or photographs that more fully explain the work that is to be accomplished or equipment that will be used. Drawings, attachments etc. should be referenced in document via number and/or page.]

IX. RETURN TO SERVICE PROTOCOL*

Fixed objects installed or altered within the Track Zone must be confirmed to be clear of the Dynamic Envelope and not in a proximity that they could be struck by a moving train or on- rail equipment and or a threat to life/safety. The following Protocol is to be implemented to ensure clearance of the Dynamic Envelope when a fixed object is installed or modified.

1. The Resident Engineer (RE), BART Engineer or BART Project Manager will be immediately on site and available to supervise the Contractor for all installations of, or alterations to fixed objects within the Track Zone. The RE will remain on site immediately available until all inspections and or clearance checks are reported complete and there is no detected or suspected threat to automatic train operations (ATO) and the integrity of revenue service is protected. In the rare, extreme or unlikely event there is a detected or suspected threat to automatic train operations and or the integrity of revenue service, the fixed and or altered item must be immediately removed or restored to its original condition, and the clearance protocol must be implemented.

2. The contractor will take measurements and confirm clearance of the Dynamic Envelope.

3. The RE will observe, duplicate and confirm the contractor's measurements and clearance of the "Dynamic Envelope."

4. The RE will implement the use of the BART Principal Track Engineer certified template to confirm the installed or altered fixed object is clear of the Dynamic Envelope.

5. The RE will call the Operations Control Center (OCC) and advise the Central Manager that a fixed object has been installed or altered, measurements have been taken and the area is clear and available for Automatic Train Operations (ATO). This does not release the RE or the Project from the responsibility of remaining on site, immediately available, until clearance has been validated and the Project is released by the OCC.

* As applicable

6. The EIC is to call the OCC and advise the Central Manager of the installation and or alteration of a fixed object and its exact location and request a train inspection to validate clearance of the Dynamic Envelope.

7. The EIC, RE, Contractor, and Project Inspector are to remain on site immediately available until clearance is validated by train inspection and all are released by the OCC.

* As applicable

RETURN TO SERVICE CHECKLIST

(This form is to be completed for any type of work that may impact or cause intrusion in the Track Zone.)

At completion of work or portion of work identified within this SSWP, and prior to releasing the work area, the following list of activities and inspection points shall be performed by the Employee in Charge (EIC) to ensure a safe state of readiness for revenue operations. Enter time inspection activity is performed. Any planned or unplanned physical alteration to the existing infrastructure or variation to design shall be documented. The completed checklist shall be signed by the EIC that performed the inspection and forwarded to the Operations Control Center (Fax: 510-464-6751), at the earliest opportunity, before the end of the work shift.

Contract No. & Project Description: _____

Person in Charge & Contact No: _____

(As indicated on approved Track Allocation Request form)

SSWP/IOP No.: _____

Inspection Date: _____

Inspected by (Print Name and Emp. ID No.): _____ **Title:** _____

Verification and/or activity:	**Time:**
1. **Wayside/platform installation(s) secure from movement.**	_____
2. **Wayside/platform installation(s) clearance verified.**	_____
3. **Pre-inspection for restoration of Work Area for revenue service.**	_____
4. **Tools/materials removed from Work Area or properly secured.**	_____
5. **Final inspection of Work Area for return to service.**	_____
6. **Release Safe Clearance/Prohibit tags.**	_____
7. **All personnel clear of track.**	_____
8. **All access doors/gates secured.**	_____
9. **Release Work Area to proper jurisdiction.**	_____
10. **Contact OCC for Clearance Verification/Track Inspection (first train).**	_____
11. **All personnel released by OCC.**	_____

12. **Briefly describe any planned or unplanned physical alteration to infrastructure, work variations and/or any contingency plans implemented (use additional sheets as needed):**

* As applicable

_____

_____

_____

_____

_____

_____

Signature:_____ **Date:** _____

* As applicable

ATTACHMENT 6:
EXAMPLE OF GLOBAL SITE SPECIFIC WORK PLAN

Company Logo or Name

GLOBAL SITE SPECIFIC WORK PLAN

Brief Description of Work *(e.g. Girder Shoring and Concrete Repair)*

CONTRACT NUMBER: 15NL-140

GSSWP #_____ REVISION #_____

CONTRACTOR NAME: _____

WORK DATES: _____

WORK LOCATION: _____

MEANS OF ACCESS TO WORK LOCATION: _____

WORK HOURS: Weekdays: _____

Saturday: _____ (if different)

Sunday: _____ (if different)

1. DESCRIPTION OF WORK:

Provide a 1-2 sentence description of the work to be accomplished under this G SSWP.

2. CONTINGENCY PLANS:

- Should any unauthorized person enter the site, they will be escorted out of the site and the BART Operations Control Center (OCC) or BART Police Department notified.
- Upon request by proper authority the OCC, BART Police Department, and/or the BART Safety Department, etc. the Contractor will stop work immediately. The Contractor will return the site to a safe condition expeditiously and vacate the area as quickly and as safely as possible, lending all reasonable support to the restoration of revenue service if so requested.
- If patrons or pedestrians ask any questions, they will be referred to BART Community Relations. {*Contractor*} will not have any unauthorized communication with residents or patrons.

  {Contractor to identify what could go wrong. Identify all likely hazards. What actions will be taken in the rare, extreme and/or unlikely event something does go wrong. What outside assistance might be necessary? Will this assistance be available if this situation occurs in the middle of the night?}

Examples include:

- *If a fire starts within the work area, Contractor will take action to put out the fire per Safety Plan, notify local Fire Department, OCC, and the Engineer*
- *If a utility is struck, Contractor to notify OCC and the Engineer*

3. EMERGENCY CONTACTS *[24-HOUR CONTACT and RESPONSE TIME]*

CONTRACTOR:

BART:

• Project Manager:	510-XXX-XXXX
• Project Superintendent:	510-XXX-XXXX
• Health and Safety Representative:	510-XXX-XXXX
• Project Manager:	
• Resident Engineer:	
• Operations Liaisons:	
• Operations Control Center	510-834-1297
• BART Police	510-464-7000
• BART Police Watch Commander	510-464-7020
• BART Project Duty Officer	510-910-5164

SECTION 01 35 24

CONSTRUCTION SAFETY

The provisions of BART Facilities Standards, Standard Specifications, Release R3.1.2, dated April 2018, Section 01 35 24, Construction Safety, shall apply to the Work.

END OF SECTION 01 35 24

This page was intentionally left blank.

SECTION 01 35 33

SECURITY PROCEDURES

The provisions of BART Facilities Standards, Standard Specifications, Release R3.1.2, dated April 2018, Section 01 35 33, Security Procedures, shall apply to the Work.

END OF SECTION 01 35 33

This page was intentionally left blank.

SECTION 01 35 54

IDENTIFICATION AND SECURITY

The provisions of BART Facilities Standards, Standard Specifications, Release R3.1.2, dated April 2018, Section 01 35 54, Identification and Security, shall apply to the Work.

END OF SECTION 01 35 54

This page was intentionally left blank.

SECTION 01 42 19

REFERENCE STANDARDS

The provisions of BART Facilities Standards, Standard Specifications, Release R3.1.2, dated April 2018, Section 01 42 19, Reference Standards, shall apply to the Work.

END OF SECTION 01 42 19

This page was intentionally left blank.

SECTION 01 43 00

QUALITY ASSURANCE

The provisions of BART Facilities Standards, Standard Specifications, Release R3.1.2, dated April 2018, Section 01 43 00, Quality Assurance, shall apply to the Work.

END OF SECTION 01 43 00

This page was intentionally left blank.

SECTION 01 43 38

FIELD SAMPLES AND MOCK-UPS

The provisions of BART Facilities Standards, Standard Specifications, Release R3.1.2, dated April 2018, Section 01 43 38, Field Samples and Mock-Ups, shall apply to the Work.

END OF SECTION 01 43 38

This page was intentionally left blank.

SECTION 01 45 00

QUALITY CONTROL

The provisions of BART Facilities Standards, Standard Specifications, Release R3.1.2, dated April 2018, Section 01 45 00, Quality Control, shall apply to the Work.

END OF SECTION 01 45 00

This page was intentionally left blank.

SECTION 01 45 24

TESTING PROGRAM REQUIREMENTS

The provisions of BART Facilities Standards, Standard Specifications, Release R3.1.2, dated April 2018, Section 01 45 24, Testing Program Requirements, shall apply to the Work.

END OF SECTION 01 45 24

This page was intentionally left blank.

SECTION 01 51 00

TEMPORARY UTILITIES

The provisions of BART Facilities Standards, Standard Specifications, Release R3.1.2, dated April 2018, Section 01 51 00, Temporary Utilities, shall apply to the Work.

END OF SECTION 01 51 00

This page was intentionally left blank.

SECTION 01 52 00

CONSTRUCTION FACILITIES

The provisions of BART Facilities Standards, Standard Specifications, Release R3.1.2, dated April 2018, Section 01 52 00, Construction Facilities, shall apply to the Work, except as modified herein.

PART 1 - GENERAL

1.06 ENGINEER'S FIELD OFFICE: Delete Article 1.6 in its entirety.

END OF SECTION 01 52 00

This page was intentionally left blank.

SECTION 01 57 00

TEMPORARY CONTROLS

The provisions of BART Facilities Standards, Standard Specifications, Release R3.1.2, dated April 2018, Section 01 57 00, Temporary Controls, shall apply to the Work, except as modified herein.

PART 1 – GENERAL

1.02 MEASUREMENT AND PAYMENT: Delete Articles 1.02A, and B and substitute therefore the following:

A. Measurement and payment for costs in connection with the Work specified herein will be considered to be included with the related item of Work as described in Section 01 20 00, Price and Payment Procedures, Article 1.04.

1.04 PEDESTRIAN AND PATRON CONTROLS: Delete Article 1.04A.1 and substitute therefore the following:

1. The Contractor shall prepare a Pedestrian Handling Plan for the Work to reflect any changes in pedestrian and patron paths including the accessible path. The accessible path shall be as determined by the District in accordance with the requirements of California Building Code and the Americans with Disabilities Act and Architectural Barriers Act Accessibility Guidelines. The Pedestrian Handling Plan shall include drawing(s) showing proposed pedestrian handling devices including temporary signage and wayfinding signs. The Contractor shall submit the plan for review and approval by the Engineer. Where the plan affects public right-of-way controlled by other jurisdictions, the Contractor shall also apply to the jurisdictional agency for approval and obtain the necessary permits. All pedestrian handling devices and signage shall be in compliance with the accessibility requirements of the California Building Code and the Americans with Disabilities Act and Architectural Barriers Act Accessibility Guidelines. The Contractor shall Install and Maintain as needed, temporary signage at adjacent transit connections, including BART Coliseum Station, BART Fruitvale Station, Amtrak Coliseum Station, Oakland Airport Connector, and the Coliseum Pedestrian Bridge, through the duration of Construction, in accordance with the approved Pedestrian Handling Plan and as Directed by the Engineer.

END OF SECTION 01 57 00

This page was intentionally left blank

SECTION 01 58 00

PROJECT IDENTIFICATION

The provisions of BART Standard Specifications for Construction Contracts, Release R3.1.2, dated April 2018, Section 01 58 00, Project Identification, shall apply to the Work, except as modified herein.

PART 1 – GENERAL

1.02 MEASUREMENT AND PAYMENT: Delete Article 1.02A and substitute therefor the following:

A. Measurement and payment for costs in connection with the Work specified herein will be considered to be included with the related item of Work as described in Section 01 20 00, Price and Payment Procedures, Article 1.04.

1.03 PROJECT IDENTIFICATION SIGNS: Delete Article 1.03 and substitute therefor the following:

1.03 PROJECT IDENTIFICATION AND GENERAL CONSTRUCTION SIGNS:

A. Requirements: Provide temporary project identification and general construction signs as Indicated or required.

B. Design, Layout, and Size: Design, layout, style of lettering, and colors shall be as shown on the Contract Drawings.

1. Project Identification and general construction signs shall be constructed from a sheet of plywood six feet by three feet in size, for wall mounting, as appropriate for the location.

C. Location: Locate the signs as Indicated or as designated by the Engineer. Additional identical signs, as desired and paid for by the Contractor, may be placed at intermediate points approved by the Engineer. Place no other signs on the right-of-way or within the limits of the jobsite.

1.04 GENERAL CONSTRUCTION SIGNS: Delete Article 1.04 and substitute therefore the following:

1.04 FIELD OFFICE SIGNS

A. Requirements: Provide one temporary field office sign as Indicated or required.

B. Design, Layout, and Size: Design, layout, style of lettering, and colors shall be as shown on the Contract Drawings.

1. The field office sign shall be constructed from a sheet of plywood six feet by three feet in size, for wall-mounting, as appropriate for the location.

C. Location: Locate the signs as Indicated or as designated by the Engineer.

1.05 CONSTRUCTION AND INSTALLATION: Delete Articles 1.05A through F and substitute therefore the following:

A. Materials: Sign faces shall be constructed of 3/4-inch thick, five-ply, exterior grade, A-B-faced, Douglas-fir plywood, APA-grade-stamped. The frame shall be nominal two-by-two or two-by-four stock, either construction-grade Douglas-fir or A-grade redwood.

B. Construction: Plywood signs shall be let into the frame, and the frame corners shall be mitered and screwed together. The sign shall be screwed to two, two by six Douglas-fir cleats that shall be bolted to its designated wall location.

C. Installation: Signs shall be installed with the top of the sign horizontal, level, and even, seven feet minimum above the ground.

D. Painting: Signs shall receive one coat of latex-based primer/sealer and two finish coats of acrylic latex on both sides and all exposed edges. Requirements for printed layer and style of letters are shown on the Contract Drawings.

E. Maintenance: Keep signs clean and in good repair until Substantial Completion of the Contract. All graffiti shall be removed within 24 hours.

F. Sign Quantities: Quantities of signs required are shown on the Contract Drawings.

END OF SECTION 01 58 00

SECTION 01 60 00

PRODUCT REQUIREMENTS

The provisions of BART Facilities Standards, Standard Specifications, Release R3.1.2, dated April 2018, Section 01 60 00, Product Requirements, shall apply to the Work.

END OF SECTION 01 60 00

This page was intentionally left blank.

SECTION 01 71 13

MOBILIZATION

The provisions of BART Facilities Standards, Standard Specifications, Release R3.1.2, dated April 2018, Section 01 71 13, Mobilization, shall apply to the Work, except as modified herein.

PART 1 – GENERAL

1.03 MEASUREMENT AND PAYMENT: Add the following Article 1.03C after Article 1.03B.3:

C. Measurement and payment for costs in connection with the Work specified herein will be considered to be included with the related item of Work as described in Section 01 20 00, Price and Payment Procedures, Article 1.04. Mobilization shall not exceed 10 percent of the total Bid amount.

END OF SECTION 01 71 13

This page was intentionally left blank.

SECTION 01 71 23

FIELD ENGINEERING

The provisions of BART Facilities Standards, Standard Specifications, Release R3.1.2, dated April 2018, Section 01 71 23, Field Engineering, shall apply to the Work.

END OF SECTION 01 71 23

This page was intentionally left blank.

SECTION 01 74 14

CLEANING

The provisions of BART Facilities Standards, Standard Specifications, Release R3.1.2, dated April 2018, Section 01 74 14, Cleaning, shall apply to the Work.

END OF SECTION 01 74 14

This page was intentionally left blank.

SECTION 01 74 21

WASTE MANAGEMENT

The provisions of BART Facilities Standards, Standard Specifications, Release R3.1.2, dated April 2018, Section 01 74 21, Waste Management, shall apply to the Work.

END OF SECTION 01 74 21

This page was intentionally left blank.

SECTION 01 77 00

CLOSEOUT PROCEDURES

The provisions of BART Facilities Standards, Standard Specifications, Release R3.1.2, dated April 2018, Section 01 77 00, Closeout Procedures, shall apply to the Work.

END OF SECTION 01 77 00

This page was intentionally left blank.

SECTION 01 78 23

OPERATION AND MAINTENANCE DATA

The provisions of BART Facilities Standards, Standard Specifications, Release R3.1.2, dated April 2018, Section 01 78 23, Operation and Maintenance Data, shall apply to the Work.

END OF SECTION 01 78 23

This page was intentionally left blank.

SECTION 01 78 39

PROJECT RECORD DOCUMENTS

The provisions of BART Facilities Standards, Standard Specifications, Release R3.1.2, dated April 2018, Section 01 78 39, Project Record Documents, shall apply to the Work.

END OF SECTION 01 78 39

This page was intentionally left blank.

SECTION 01 78 44

SPARE PARTS AND MAINTENANCE MATERIALS

The provisions of BART Facilities Standards, Standard Specifications, Release R3.1.2, dated April 2018, Section 01 78 44, Spare Parts and Maintenance Materials, shall apply to the Work.

END OF SECTION 01 78 44

This page was intentionally left blank.

SECTION 01 79 00

DEMONSTRATION AND TRAINING

The provisions of BART Facilities Standards, Standard Specifications, Release R3.1.2, dated April 2018, Section 01 79 00, Demonstration and Training, are superseded by these Contract Specifications.

PART 1 - GENERAL

1.01 SECTION INCLUDES

A. Specifications for training deliverables and the training of District personnel in the installation, management, operation, and maintenance of furnished equipment and systems.

B. Where training requirements are specified under another Section in these Specifications, coordinate requirements with the requirements specified herein to provide a complete and comprehensive training program.

1.02 RELATED SECTIONS

A. Section 01 33 00, Submittal Procedures

B. Section 01 43 00, Quality Assurance

C. Section 01 78 23, Operation and Maintenance Data

1.03 MEASUREMENT AND PAYMENT

A. Consider final payment for all training material deliverables for each specification section to be a separate schedule of values line item in the Bid Schedule of the Contract and not be a part of a related item of work in the price schedule or incidental to the Work.

B. See Contract Specifications Section 01 20 00, Price and Payment Procedures, Article 1.02A.1.

1.04 DEFINITIONS

A. Audience: Group of individuals to be trained, typically from the same or similar job classifications.

B. Class: A group of students attending the same course at the same time and place.

C. Classroom training: Training occurs in a classroom setting. May include various delivery methods.

D. Computer Based Training: Training occurs in a classroom or office setting. Content is delivered through a computer module. The delivery may or may not require instructor technical support or moderation.

E. Course: A documented collection of information and activities (lessons), organized to teach specific identified information (a specific subject) with an expected measurable outcome.

F. Course Evaluation: A written review by the students, providing feedback on the course content and quality of presentation.

G. Curriculum: A series of courses intended for the same group of participants (for example, electricians.)

H. Delivery Method: How the content will be delivered. Typical methods include lecture, demonstration, computer-based, hands-on practice.

I. Demonstration Training: A class delivered to determine if the course meets the expected outcomes defined by this specification and the training plan.

J. Employee Development Specialist (EDS): Trainer.

K. Familiarization training: Instructor describes, points out or demonstrates on the equipment. May occur either in the field or a simulated classroom environment.

L. Field Instruction/Training: Delivery of content occurs at the location where the equipment or system being trained is installed or maintained.

M. Go-Live: System and/or equipment is released for use by District staff or start of revenue service, whichever date is later.

N. Hands-On Training: Each class participant practices installation maintenance, operation, or configuration with the equipment and tools in class. Practice mirrors work participants shall perform on the job.

O. Instructor Guide: A document that provides all details required for an instructor to teach a course so that training objectives are met, students receive consistent information and experience similar activities.

P. Lecture: A delivery method that includes an instructor speaking to students, asking questions, presenting slides or using other reference materials.

Q. Lesson: A component of learning that contributes toward the outcome of a module.

R. Module: A self-contained segment of learning consisting of a series of lessons that covers key topics of a course and has an independent outcome.

S. Prerequisite: Knowledge or skill required prior to attending a course to be successful in the course.

T. Staged Training: Delivery of classes to the target audience.

U. Student Guide: A document provided to follow course delivery including all documents a student will reference or need to participate in class. Allows students to follow the lessons and organize class notes.

V. Training Program Plan: An approach for training specific knowledge and skill with a defined outcome.

W. Train the Trainer (TTT): Delivery of a class to participants who are expected to be able to redeliver the same content with the same results. Delivery includes additional time spent with the participants to explain how to set up the classroom, deliver the class using the training materials, and use any special tools or equipment required to deliver the course.

1.05 TRAINING PROGRAM DESCRIPTION

A. The training program shall:

1. Be approved by the District. At least one approver shall be from the applicable training department.

2. Train District's training, maintenance, engineering, and operations personnel in details of the furnished systems and equipment.

3. Enable District personnel to Install, operate, service, configure, maintain, and interact with the hardware, software, and firmware, such that the systems and equipment will perform in accordance with the requirements in the individual Sections of these Specifications.

4. Enable engineering personnel to Install, configure, modify, and perform application software development, application software updates, hardware adds, moves, changes to systems and sub-systems on a continuing basis.

5. Be designed to be replicated without impact to project testing or revenue service when delivered after Go-Live.

6. Include classroom, hands-on, and/or field instruction, as appropriate, and all models, mockups, documentation, and aids to conduct the training program.

7. Be District specific including how the system and equipment integrate with other equipment and systems within the District.

8. Consist of a logically-related sequence of separate Courses covering the content required to meet the requirements of this specification.

9. Incorporate, as applicable, the requirements of regulatory agencies and instruments, such as the California Public Utilities Commission (CPUC), American With Disabilities Act (ADA), Environmental Protection Agency (EPA), California Code of Regulations: Title 8, California Occupational Safety and Health Administration (CAL/OSHA), California Building Code (CBC), and the California Department of Motor Vehicles.

B. Provide access to technical personnel as needed to consult with District's training representatives to support development of training programs.

1.06 SUBMITTALS

A. Refer to Section 01 33 00, Submittal Procedures, for Submittal requirements and procedures.

B. Attend a one-day training submittal workshop with a District training representative prior to demonstration and training submittals. The purpose of the workshop is to make the Submittal process more efficient by clarifying expectations of this section, reviewing attachment information, discussing audience expectations, and answering questions.

C. At least 7 Days prior to Submittal of Training Program Plan, provide a familiarization walkthrough to include a tour of the facility and equipment (or representative example), basic explanation of planned function, operation, location and integration with legacy equipment, for a minimum of six (6) District training submittal approvers for each course planned. Focus of walkthrough is to understand work performed, differences from legacy systems and equipment, and required Audience for each course.

D. Obtain verification in writing from the Engineer that training Submittal prerequisites (documents and equipment) as defined in Table 1 of this section have been met.

E. Submittals of written documents shall be in a native electronic format that is searchable with changes visible (e.g. MS Word Track Changes).

F. Submit the following for each course to the District Representative for approval. Obtain the District Representative's approval of each training program Submittal before proceeding to the next.

1. Training Submittal Schedule
2. Training Program Plan
3. Instructor resumes
4. Instructor guides and attachments
5. Student guides
6. Training aids and supporting documentation
7. Training demonstrations
8. Staged training schedule
9. Training reports
10. Final deliverables

G. A Submittal will not be approved prior to receipt of each training program prerequisite per Table 1 below.

Table 1 - Training Submittal Prerequisite Table

This table identifies the prerequisites required before a submittal can be approved. The Submittal Schedule shall reflect these dependencies.

Submittal	Prerequisite
Training Submittal Schedule	
Training Program Plan	• Training Submittal Schedule • District approver familiarization walk-through
• Instructor guides & student guides • Training aids supporting documentation • Training locations identified	• Approved Training Program Plan • Approved prefinal O&M manual
Training aids installation at training location	Room locations approved and secured
Instructor resumes	Approved Training Program Plan
Training demonstration	• Training aids installed at training location • Verification equipment/system is working as designed • Approved instructor guide • Approved student guide • Approved instructor resume • Approved prefinal O&M manual
Staged training class schedule	Approved training demonstration & updated materials
Training delivery starts	• Lead time for scheduling met • Mitigation if required (Go-Live more than 5 months before training start) • Approved staged training class schedule
Final deliverables	Last class delivered
Updates to materials	Updates to system or equipment if needed

1.07 VIDEO AND AUDIO RECORDINGS

A. Pre-recorded lectures or lessons shall not substitute for a classroom instructor.

B. Record and provide electronic copies of the presentation of the training courses.

1.08 SUPPLEMENTAL TRAINING

A. Conduct supplemental training courses if the form, fit, or function of the system or equipment is modified or reconfigured after start of the staged training.

B. During warranty period, provide arrangements for District staff to accompany warranty support personnel during service calls.

1.09 REVISIONS

A. Revise training program deliverables and training aids to incorporate design changes, retrofits, changes generated during testing, and to correct errors and omissions.

B. Updates and revisions to the instructor guides, student guides, and attachments shall be incorporated no less than quarterly for the duration of the Contract and warranty.

1.10 QUALITY ASSURANCE

A. General:

1. Training program deliverables shall be developed, fabricated, assembled, submitted, demonstrated, evaluated, and reworked as required, in accordance with the District's quality assurance standard.

2. Meet quality assurance standards specified in Section 01 43 00, Quality Assurance.

B. Evaluation and Approval: Training program will be examined, checked, inspected, and evaluated by the District to achieve the following objectives:

1. Verify that the workmanship and content comply with requirements herein.

2. Identify and document nonconformances in materials, workmanship, and technical content.

3. Recommend rework actions to correct defects.

4. Recommend process improvements to prevent repetition of those on conformances.

C. Examinations, checks, inspections, and evaluations performed by District to verify compliance shall not relieve the Contractor of responsibility to comply with the requirements herein.

D. Contractor may request authorization to depart from a requirement herein or may request that District accept a training program deliverable identified as nonconforming by submitting a request for deviation or waiver.

PART 2 – PRODUCTS

2.01 TRAINING SUBMITTAL SCHEDULE

A. Prepare a submittal schedule (reference Table 1 – Training Submittal Prerequisite) for training activities including document delivery dates; review and acceptance periods; training

class preparation time; lead times for delivery scheduling; and class delivery. Schedule to include Critical Path milestones from the Contract Schedule as defined in 01 32 16 construction progress schedule. Schedule to be approved by the District.

1. Obtain approval of class schedule four (4) weeks prior to delivery of staged training.

2. Start staged training delivery no sooner than five months before go-live unless a mitigation plan for the gap between training completion and go-live is defined and accepted.

2.02 TRAINING PROGRAM PLAN

A. The Training Program Plan shall include a list of courses and for each course:

1. A course description and objectives

   a. Course description shall be a summary of what is included in the course and shall include:

      1) Topics covered in the course.

      2) List of new equipment including model numbers.

      3) List of equipment or systems that are integrated with new equipment or systems to be trained.

   b. Objectives shall be precisely worded statements of the end-of-course performance expected of the students. Course objectives shall include:

      1) The knowledge, skills, and abilities students will acquire by the end of the course.

      2) The methods of evaluating achievement of the objective (e.g. written exam, performance evaluation, oral quiz).

      3) The conditions under which the evaluation will occur (e.g. open book, on a simulator).

      4) The measurable level of performance required.

2. Planned target population for each course based on feedback from walkthrough from Article 1.6C herein feedback and Attachment 1: Training Courses by Audience.

3. An outline of the major topics covered in each course broken down into increments of either:

   a. 2 hours or less, or

   b. 1/4 of the total time to teach the course whichever is less.

4. If a topic will take more than what is Indicated above to teach, it shall be broken into subtopics to meet this requirement. Each topic will include:

    a. Short description of content covered.

    b. Approximate time allocation.

    c. Where it will be delivered; field or classroom.

5. Delivery method (lecture, demonstration, hands-on practice)

    a. List of training equipment, tools, training aids required

6. Total course length shall be no less than the length defined in Attachment 1: Training Courses by Audience.

7. A list of all equipment, tools, training aids, training devices that are required and shall be provided to deliver the training.

8. Description of method of evaluating student knowledge and skill, for example written or performance exercises.

    a. Provide grading system to identify students for whom further training is required and include a remediation plan for students who do not meet mastery level. Grading system shall be approved by the District.

9. A list of prerequisites for each course:

    a. Include other courses from within the plan that need to be completed.

    b. Include knowledge and skills that need to be acquired prior to start of this program plan and strategy to meet these requirements.

    c. Assume that the personnel to be trained have only the basic skills pertinent to their craft, as outlined in the District's job descriptions.

    d. Assume that District personnel to be trained have no knowledge of features of the system or equipment to be taught.

2.03 INSTRUCTOR RESUMES

A. Instructor qualifications, listed below, shall be documented in a resume and other supporting documents as required to demonstrate compliance with these requirements. In the case of a knowledge or experience gap, document how and when the gap will be filled.

1. Fluency in English and ability to be heard in required training situation.

2. Experience as a classroom instructor.

3. Possesses relevant licenses, equipment or factory certifications for subject taught.

4. Relevant technical and practical experience with the District-contracted system and equipment installation at the level (installation / operations / maintenance /configuration) required to teach the course. The instructor for configuration courses shall have direct engineering experience and expertise for the specific system(s) trained.

5. A thorough knowledge of the instructor guides, training manuals, references, procedures, tools, test equipment, and other training aids required to present the training courses.

6. Obtain District approval of instructor resumes at least 30 Days prior to the scheduling of demonstration training or if any change in instructor becomes necessary during the Contract.

2.04 TRAINING COURSE CONTENT REQUIREMENTS

A. Courses shall provide students practice using source and reference documents.

B. Courses shall provide students with hands-on practice of key, unique, or new procedures and troubleshooting.

C. Each course shall include a quick reference document for critical or emergency situations if applicable.

D. Each course shall be District-specific and applicable to the District environment and job function.

E. Each course shall include how the system or equipment integrates into other District equipment and systems.

F. Each course shall include pertinent safety precautions for the system or equipment being trained, including LOTO procedures and other applicable Control of Hazardous Energy (COHE) requirements.

G. Each course shall include a test or performance evaluation.

1. Written and/or performance-based evaluations shall be used to determine whether each student has learned the objectives for the course.

2. Tests and performance evaluations shall validate participant ability to install, operate, maintain, and configure equipment and systems to the requirements identified herein. Testing and evaluation items must directly link to the content of the class and cover the range and complexity of the course. Questions that evaluate course prerequisites are not acceptable.

3. Tests and evaluations shall be designed to be completed independently by each student and have a grade to indicate mastery of the course content.

4. Grades shall be kept strictly confidential and shall be submitted only to the District training department.

5. The instructor will grade tests and go over the answers of quizzes, tests, and performance evaluations given during class delivery after the test or quiz is completed.

H. The training program shall be conducted for the equipment, systems and audiences listed in Attachment 1: Training Courses by Audience.

1. Classes noted as TTT in Attachment 1: Training Courses by Audience will be delivered by the Contractor to District trainers and include items Indicated in 3.2A11 and 2.5 I herein.

2. Classes noted as Contractor Delivered shall be delivered to District personnel identified in Attachment 1: Training Courses by Audience.

I. In cases where the training scope is not defined in Attachment 1: Training Courses by Audience, propose a scope for approval by the District, in consultation with the training department.

J. The training program shall not be limited to the equipment and systems listed in Attachment 1: Training Courses by Audience, if the District determines that additional courses are required to achieve the objectives of the training program.

K. When an operation and maintenance (O&M) manual is referenced herein, it shall be understood to mean the O&M manual prepared for the specific system or equipment, in accordance with Standard Specifications Section 01 78 23, Operation and Maintenance Data.

L. There are 5 course types: Installation, System and Equipment Operation, System Configuration, Primary Maintenance, Secondary Maintenance. The type of course required for each subject is dependent upon the primary audience for the course. Course types can be combined if appropriate to the audience.

1. Installation training courses:

a. Enable District personnel to install, configure, test, troubleshoot and accept systems and equipment.

b. Provide hands on practice of actual installation.

c. Review written procedures for installation.

2. System and Equipment Operation training courses:

a. Enable District personnel to operate the facility, system, and equipment unassisted including interfaces to other equipment.

b. Provide classroom and hands-on practice in operation of the facility, system, and equipment including operation level troubleshooting.

c. Cover written procedures from the O&M manual for the following:

1) Operating the facility, system, and equipment.

2) Operator-level fault diagnosis and corrective action.

3) System Configuration training courses:

a. Enable District personnel to configure and program the system and equipment.

b. Provide classroom and hands-on practice in the use of the software and firmware development environments.

c. Enable District personnel to install software revisions and upgrades.

d. Provide training in the use of the software and firmware development environment to enable the District personnel, including Engineering staff, to perform application software development and modifications; and hardware adds, moves, and changes for the equipment and systems.

e. Provide hands-on sessions to fully demonstrate all procedures necessary to configure, modify, and perform application software development, application software updates, hardware adds, moves, changes to all equipment room systems, wayside systems, and sub-systems.

f. Provide training on all procedures necessary to configure, modify, and perform application software development, application software updates, hardware adds, moves, changes to all equipment room systems, wayside systems, and sub-systems.

g. Include warranty timeframes and limitations

3. Primary Maintenance training courses:

a. Provide detailed theory of operation including power distribution, data paths, and signal conditions for inputs and outputs of electromechanical modules and sub modules.

b. Provide practice with written procedures from the O&M manual for facility, system and equipment operation, preventive maintenance, and corrective maintenance.

c. Provide students with hands-on, step-by-step instruction and practice in the disassembly and assembly of mechanical, electrical, electromechanical, and electronic modules and sub modules to the lowest level field replaceable units (LLFRUs).

d. Train District personnel to utilize facility, system, and equipment documentation to perform preventive and corrective maintenance.

e. Provide students with hands-on instruction and practice in preventive maintenance, including procedures for cleaning, lubricating, and adjusting; and for evaluating the wear of modules and sub modules.

f. Enable District maintenance personnel to practice corrective maintenance to diagnose, isolate, and repair faults to the LLFRU using commercially available and special test equipment supplied under the Contract.

g. Include warranty timeframes and limitations.

4. Secondary Maintenance training courses:

a. Provide detailed theory of operation including power distribution, data paths, and signal conditions for all inputs and outputs of all modules, sub modules, and circuit boards to component level.

b. Provide practice with written procedures from the O&M manual, for system and equipment operation, preventive maintenance, and corrective maintenance to component level.

c. Provide students hands-on, step-by-step instruction and practice in the disassembly and assembly of mechanical, electrical, electromechanical, and electronic modules and sub modules to component level.

d. Train District personnel to utilize system and equipment documentation to perform preventive and corrective maintenance to the component level.

e. Provide students hands-on instruction and practice in preventive maintenance, including procedures for cleaning, lubricating, and adjusting, and for evaluating the wear of modules and sub- modules to the component level.

f. Enable District maintenance personnel to practice corrective maintenance to diagnose, isolate, and repair faults to component level, using commercially available and special test equipment supplied under the Contract.

g. Enable District maintenance personnel to operate and maintain (diagnose, isolate, and repair faults to the component level), special test equipment, maintenance test bench, and fixtures supplied under the Contract.

2.05 TRAINING AIDS AND SUPPORTING DOCUMENTATION

A. Provide training aids required to train course participants. Training aids include: training devices, special tools, fixtures, racks, models, mockups, simulators, application software, development tools, software development environment, development computer(s), compilers, prom programmers, and other equipment for the course.

B. Training aids used in the course shall be connected and configured to faithfully simulate the District environment.

C. Training aids shall be integrated/interfaced into corresponding existing training and wayside training equipment where needed to faithfully simulate the BART revenue environment.

D. Training aids shall be installed with the appropriate essential and non-essential power and mounted for earthquake safety.

E. Training aids will be designed to allow replication of training without impact to project testing or revenue service when delivered after go-live.

F. Contractor will verify training aids are fully functional before delivery of any training course.

G. Provide District with revisions to the training aids to faithfully simulate the District environment, during the performance of the Work, including applicable warranty terms.

H. Training aids shall be of durable construction and shall become the property of District on completion of staged training.

I. Source code used in the development of computer-based training materials or simulations shall be provided and become the property of District.

J. A TTT course is required on the use of training aids and other equipment required to train course participants to enable personnel to configure, maintain and use supporting documentation for training aids provided.

K. Provide supporting documentation including O&M manuals, Book of Plans, and complete specification documents for training aids and other equipment required to train the course.

L. Provide a complete set of all software, development tools, compilers for training aids to enable repair and rebuild of training aids.

M. Spare parts for training aids shall be provided and covered under the same spare parts requirements as the corresponding revenue service installation.

2.06 INSTRUCTOR GUIDE

A. Prepare instructor guides and attachments for the approval of the District. Current District template to facilitate compliance with this section available upon request.

B. Instructor guide shall be detailed enough to determine what the instructors and students are doing during the course.

C. Provide one instructor guide for each training course. Each instructor guide shall be arranged as specified herein.

D. Content, including attachments, shall be clear and readable in the format intended for class. (e.g., slides will be clear on the computer screen as well as when projected for class).

E. Guides shall contain a Table of Contents and each page will have a footer that includes the document title and page number.

F. The title shall be short and descriptive and contain the name of the training course and, if applicable, the target population (e.g. AFC Equipment Operation for Station Agents).

G. Time to Teach: An estimate of the time to teach the lessons in a training course. The actual time to teach may vary with student loading and knowledge level. Time to teach estimate is to be based on class size in Attachment 1: Training Courses by Audience. This includes delivery, breaks, and travel time within the training session required for class.

H. Course timeline, to include in order:

1. Lesson titles

2. Time to teach each lesson

3. Type of instruction employed in delivering each lesson, such as classroom, hands-on, or field.

I. Objectives: Each instructor guide shall have one or more performance-based objectives. See Section 2.2A1b for requirements for writing objectives.

J. Reference Documents List: The O&M manual shall be the primary reference document for the instructor guide. Sources of the material presented in the instructor guide shall be listed. Reference documents may include test equipment manuals, original equipment manufacturer manuals, software manuals, and documents developed by the Contractor for this Contract.

K. Materials and Equipment: Material and equipment used in the presentation of the training course shall be listed in the instructor guide, and may include the following:

1. Student guide titles

2. Training tools such as dry erase boards, markers, erasers, easels, projectors, and monitors.

3. Training aids and equipment such as hand tools, notebook computers, test equipment, training racks, simulators, fixtures, and parts for disassembly.

4. Special facility requirements, such as compressed air, network access, or unusual power requirements.

L. All materials and equipment used in the presentation of training are deliverables and shall become the property of District.

M. Introduction:

1. Name and background of the instructor.

2. An overview of the subjects covered in the training course.

3. The objectives of the training course.

4. The outline of the training course.

5. The schedule of course activities, breaks, and class hours.

6. Safety precautions related to the training environment.

7. Classroom rules and procedures.

8. Facility information, such as location of restrooms, lunchrooms, parking, and emergency evacuation routes.

N. Presentation:

1. Serves as a written record of the specific facts and information in the training course.

2. Consists of a series of modules and lessons covering the key topics of the course.

3. Clearly describes the delivery method (lecture, demonstration, practice, video, etc.) of each lesson and time to teach.

4. Provides clear directions for the instructor for set up of student exercises and activities.

5. Is detailed enough for another instructor with knowledge and experience in the subject to teach the training course.

6. Ensures that the information presented during the training is consistent each time the course is taught.

7. Ensures achievement of the objectives of the training course.

O. Summary: This shall be a comprehensive review of the lesson objectives, summarizing key elements of the training for the entire course.

2.07 INSTRUCTOR GUIDE ATTACHMENTS

A. Provide training materials required for presentation of the course with the instructor guide. The following attachments, as used in the course, shall be supplied with each instructor guide at Submittal:

1. Slides, pictures, videos, tables, charts, diagrams, self-paced instruction, computer-based training, and multimedia materials.

2. Written procedures, specific to the District, for operating, maintaining, diagnosing, troubleshooting, and repairing the hardware, software, and firmware if O&M references not used in class.

3. Command code, service code, and error code lists

4. Tests, quizzes, and performance evaluations

5. Warranty information, if applicable

B. Reference Documents: documents used as sources of the material in the instructor guide shall be provided with the instructor guide submittal.

2.08 STUDENT GUIDE

A. Provide one copy of the student guide for each student plus two additional copies.

B. Student guides shall be separate from, and in addition to, the O&M manuals.

C. The student guide shall include:

1. Table of Contents, including titles and page numbers of each lesson. The guide will have a footer that includes the document title and page numbers.

2. Course timeline, to include in order:

a. Lesson titles

b. Time to teach each lesson

c. Type of instruction employed in delivering each lesson, such as classroom, hands-on, or field.

3. Lesson contents, including lesson titles and objectives.

4. Materials students will refer to in class including but not limited to: slides, pictures, tables, charts, diagrams, written procedures, code lists, system address lists, and drawings

5. Course evaluation form.

D. Provide the District with changes and revisions to the student guide throughout the Contract and warranty.

2.09 TRAINING REPORTS

A. Maintain a roster of each class that includes: Class Name, Class Date(s), Instructor Name, Start Time, Location, Participant Employee ID No and Name with space for signature and final grade and submit after class sign-in to the District training department.

B. Within two Days of completion of each training class, update the roster with student final grade and submit along with student evaluations of the training course to the District training department.

2.10 FINAL DELIVERABLES:

A. After changes through staged training have been incorporated and approved, submit final approved deliverables for all courses consisting of the final versions of the following:

1. Instructor guides and attachments to the instructor guides, in electronic editable native format in accordance with current District standards.
2. Questions and Answers (Q&As) per section 3.3 J compiled in electronic editable native format in accordance with current District standards.
3. Training aids and supporting documentation.
4. Self-paced, computer-based, or multimedia software and materials needed to deliver including licensing.
5. Other training materials and equipment that have not already been provided needed to deliver training courses.

PART 3 - EXECUTION

3.01 TRAINING LOCATION AND CLASSROOMS

A. Conduct training classes in facilities subject to District approval. Equip facilities with tables, chairs, equipment, and tools required to deliver each course. District facilities may be available upon request.

B. Secure access to field equipment required for class delivery.

C. Locations with District access or within close proximity to work locations shall be given higher priority when selecting a training location.

D. Plan for transportation between training locations during class delivery and after students have arrived.

E. An instructor training at a District facility for more than two (2) weeks will be required to submit a photo ID and personal information for a background check to be performed and a District contractor badge to be issued. Training conducted under two (2) weeks does not require a Department of Justice (DOJ) investigation and a temporary contractor badge will be issued.

3.02 TRAINING DEMONSTRATION

A. After approval of all training materials and equipment, schedule a training demonstration of each training course to demonstrate compliance with requirements herein.

1. Prior to scheduling of the demonstration class, confirm in writing that the instructor has been on the Jobsite and is proficient with the training course materials, training equipment, and knowledgeable of the details of the equipment installation and integration at the District.
2. Prior to scheduling of the demonstration class, verify in writing to training department that systems and equipment are working as designed.
3. Approved instructor guides, student training manuals, other training materials and training aids for the course shall be used in the training demonstrations.

4. The approved course shall be presented in its entirety to an evaluation team composed of District technical, supervisory, and training personnel.

5. Demonstration training does not count toward staged training.

6. The evaluation team will participate fully as students evaluating the course content, organization, and presentation for applicability and compliance with the requirements herein.

7. The evaluation team will prepare a list of nonconformances, and recommend either acceptance, acceptance with changes, or rejection of the training demonstration.

8. Document updates or requested changes that result from the demonstration class. Include how the change will be incorporated into the training materials or reason for not incorporating it for approval by the District training representative.

9. Required changes shall be made and approved prior to staged delivery.

10. The evaluation team will recommend to the District that all (when rejected), or a portion (when accepted with changes) of the training demonstration be repeated.

11. For TTT courses after the demonstration course is approved, deliver a TTT process as follows:

    a. Deliver the approved course to identified EDS.

    b. Review the instructor guide with the EDS after delivery of the course.

    c. Walk through how to configure training equipment and training aids in accordance with the instructor guide.

    d. Observe delivery by each EDS trained via TTT process until it is confirmed course is delivered as designed and accurate information provided.

    e. Be available to answer questions from staged training until all staff are trained. Questions shall be answered within two calendar days of submission.

3.03 STAGED TRAINING

A. Unless identified as a TTT course in Attachment 1: Training Courses by Audience, all training delivery shall be the responsibility of the Contractor.

B. Staged training shall use approved training materials and training aids provided by the Contractor.

C. The maximum class size for classroom training shall be consistent with the maximum class size defined for the functional group receiving the training per Attachment 1: Training Courses by Audience.

D. The maximum class size for field and hands-on practice shall be four persons.

E. The training shall not exceed eight hours per day, including lunch and breaks.

F. Classes shall be scheduled on the three shifts (days, swing, graves) as required to train the number of staffs working on that shift per Attachment 1: Training Courses by Audience. Concurrent training delivery on each shift may be required to meet project deadlines.

G. Class schedules shall be submitted to the District for approval at least four weeks prior to the projected start of training. Staged training shall be included on the schedule regardless of training delivery responsibility.

H. Train the number of staffs identified in Attachment 1: Training Courses by Audience.

I. Provide sufficient training aids and materials for the number of students in the class.

J. During the delivery of training, gather unanswered questions from the classes, identify answers, and prepare a summary (appending to the last class list) of Q&As for distribution to training participants. Applicable information shall be incorporated into the final instructor guide and student guide materials prior to submission of final deliverable.

K. Have each participant complete a standard course evaluation form provided by District training department.

END OF SECTION 01 79 00

ATTACHMENT TO FOLLOW

This page was intentionally left blank.

ATTACHMENT 1: TRAINING COURSES BY AUDIENCE

System or Equipment	Course Type	Staged Training Delivery	Delivery Method	Minimum Course Length (hours)	Audience	Audience Number by Shift			Maximum Class Size by Shift		
						Day	Swing	Grave	Day	Swing	Grave
Elevator & Elevator Control System	P	CON	Hands-on Practice, lecture, demonstration	16	Certified Elevator Escalator Workers	12	22	8	4	4	4
CCTV System	P	CON	Hands-on Practice, lecture, demonstration	8	Communications Technician	16	17	12	6	6	6
Real Time Display	P	CON	Hands-on Practice, lecture, demonstration	8	Computer Technician	5	5	5	2	2	2

Notes for the table:

- *System or equipment is broken out or grouped based on responsible District maintenance group.*
- *Course Type indicates which of the 5 types are delivered. A given system or equipment may have multiple course types. Include a*

ATTACHMENT 1: TRAINING COURSES BY AUDIENCE

separate line for each course type. Insert the appropriate code from the list below:

- *I = Installation* *O = System and Equipment Operation*
- *C = System Configuration* *P = Primary Maintenance* *S=Secondary Maintenance*

- *Staged Training Delivery indicates whether it is the sole responsibility of the Contractor OR the Contractor will perform Train the Trainer and District will deliver staged training. Insert the appropriate code from the list below:*
  - *CON = Contractor delivered* *TTT = Contractor delivers train the trainer and District delivers*
- *Delivery Method lists the expected delivery method(s) for the training: lecture, demonstration, computer-based, hands-on practice. More than one Delivery Method may be applicable.*
- *Audience is the primary classification(s) for which the training will be created. Job Description of this classification is used for prerequisite planning.*
- *Audience Number by Shift is the total number of students who require training to be delivered on each shift.*
- *Maximum Class Size by Shift is the maximum number of students that can attend classroom training on each shift. Class sizes may need to be smaller due to District scheduling needs or hands-on practice requirements*

SECTION 01 81 13

SUSTAINABILITY REQUIREMENTS

The provisions of BART Facilities Standards, Standard Specifications, Release R3.1.2, dated April 2018, Section 01 81 13, Sustainability Requirements, shall apply to the Work.

END OF SECTION 01 81 13

This page was intentionally left blank.

SECTION 02 41 19

SELECTIVE STRUCTURE DEMOLITION

The provisions of BART Facilities Standards, Standard Specifications, Release R3.1.2, dated April 2018, Section 02 41 19, Selective Structure Demolition, shall apply to the Work.

PART 1 - GENERAL

Delete Article 1.03 in its entirety and replace with:

1.03 MEASUREMENT AND PAYMENT

A. Measurement and payment for costs in connection with the Work specified herein will be considered to be included with the related item of Work as described in Section 01 20 00, Price and Payment Procedures, Article 1.04.

END OF SECTION 02 41 19

This page was intentionally left blank.

SECTION 03 05 15

PORTLAND CEMENT CONCRETE

The provisions of BART Facilities Standards, Standard Specifications, Release R3.1.2, dated April 2018, Section 03 05 15, Portland Cement Concrete, shall apply to the Work, except as modified herein:

PART 1 - GENERAL

1.02 MEASUREMENT AND PAYMENT: Delete Articles 1.02A and B and substitute therefore the following:

A. Measurement and payment for costs in connection with the Work specified herein will be considered to be included with the related item of Work as described in Section 01 20 00, Price and Payment Procedures, Article 1.04.

END OF SECTION 03 05 15

This page was intentionally left blank.

SECTION 03 11 00

CONCRETE FORMING

The provisions of BART Facilities Standards, Standard Specifications, Release R3.1.2, dated April 2018, Section 03 11 00, Concrete Forming, shall apply to the Work, except as modified herein:

PART 1 - GENERAL

1.03 MEASUREMENT AND PAYMENT: Delete Articles 1.03A and B and substitute therefore the following:

A. Measurement and payment for costs in connection with the Work specified herein will be considered to be included with the related item of Work as described in Section 01 20 00, Price and Payment Procedures, Article 1.04.

END OF SECTION 03 11 00

This page was intentionally left blank.

SECTION 03 11 14

FALSEWORK

The provisions of BART Facilities Standards, Standard Specifications, Release R3.1.2, dated April 2018, Section 03 11 14, Falsework, shall apply to the Work, except as modified herein:

PART 1 - GENERAL

1.02 MEASUREMENT AND PAYMENT: Delete Articles 1.02A and B and substitute therefore the following:

A. Measurement and payment for costs in connection with the Work specified herein will be considered to be included with the related item of Work as described in Section 01 20 00, Price and Payment Procedures, Article 1.04.

END OF SECTION 03 11 14

This page was intentionally left blank.

SECTION 03 15 00

CONCRETE ACCESSORIES

The provisions of BART Facilities Standards, Standard Specifications, Release R3.1.2, dated April 2018, Section 03 15 00, Concrete Accessories, shall apply to the Work, except as modified herein:

PART 1 - GENERAL

1.03 MEASUREMENT AND PAYMENT: Delete Articles 1.03A and B and substitute therefore the following:

A. Measurement and payment for costs in connection with the Work specified herein will be considered to be included with the related item of Work as described in Section 01 20 00, Price and Payment Procedures, Article 1.04.

END OF SECTION 03 15 00

This page was intentionally left blank.

SECTION 03 20 00

CONCRETE REINFORCING

The provisions of BART Facilities Standards, Standard Specifications, Release R3.1.2, dated April 2018, Section 03 20 00, Concrete Reinforcing, shall apply to the Work, except as modified herein:

PART 1 - GENERAL

1.03 MEASUREMENT AND PAYMENT: Delete Articles 1.03A, B and C and substitute therefore the following:

A. Measurement and payment for costs in connection with the Work specified herein will be considered to be included with the related item of Work as described in Section 01 20 00, Price and Payment Procedures, Article 1.04.

END OF SECTION 03 20 00

This page was intentionally left blank.

SECTION 03 30 00

CAST-IN-PLACE CONCRETE

The provisions of BART Facilities Standards, Standard Specifications, Release R3.1.2, dated April 2018, Section 03 30 00, Cast-In-Place Concrete, shall apply to the Work, except as modified herein:

PART 1 - GENERAL

1.03 MEASUREMENT AND PAYMENT: Delete Articles 1.03A, B and C and substitute therefore the following:

A. Measurement and payment for costs in connection with the Work specified herein will be considered to be included with the related item of Work as described in Section 01 20 00, Price and Payment Procedures, Article 1.04.

END OF SECTION 03 30 00

This page was intentionally left blank.

SECTION 03 35 00

CONCRETE FINISHING

The provisions of BART Facilities Standards, Standard Specifications, Release R3.1.2, dated April 2018, Section 03 35 00, Concrete Finishing, shall apply to the Work, except as modified herein:

PART 1 - GENERAL

1.03 MEASUREMENT AND PAYMENT: Delete Articles 1.03A and B and substitute therefore the following:

A. Measurement and payment for costs in connection with the Work specified herein will be considered to be included with the related item of Work as described in Section 01 20 00, Price and Payment Procedures, Article 1.04.

END OF SECTION 03 35 00

This page was intentionally left blank.

SECTION 03 61 11

NON-SHRINK GROUT

The provisions of BART Facilities Standards, Standard Specifications, Release R3.1.2, dated April 2018, Section 03 61 11, Non-Shrink Grout, shall apply to the Work, except as modified herein:

PART 1 - GENERAL

1.03 MEASUREMENT AND PAYMENT: Delete Articles 1.03A and B and substitute therefore the following:

A. Measurement and payment for costs in connection with the Work specified herein will be considered to be included with the related item of Work as described in Section 01 20 00, Price and Payment Procedures, Article 1.04.

END OF SECTION 03 61 11

This page was intentionally left blank.

SECTION 05 05 22

METAL WELDING

The provisions of BART Facilities Standards, Standard Specifications, Release R3.1.2, dated April 2018, Section 05 05 22, Metal Welding, shall apply to the Work, except as modified herein:

PART 1 - GENERAL

1.03 MEASUREMENT AND PAYMENT: Delete Articles 1.03A and B and substitute therefore the following:

A. Measurement and payment for costs in connection with the Work specified herein will be considered to be included with the related item of Work as described in Section 01 20 00, Price and Payment Procedures, Article 1.04.

END OF SECTION 05 05 22

This page was intentionally left blank.

SECTION 05 12 00

STRUCTURAL STEEL FRAMING

The provisions of BART Facilities Standards, Standard Specifications, Release R3.1.2, dated April 2018, Section 05 12 00, Structural Steel Framing, shall apply to the Work, except as modified herein:

PART 1 - GENERAL

1.02 MEASUREMENT AND PAYMENT: Delete Articles 1.02A and B and substitute therefore the following:

A. Measurement and payment for costs in connection with the Work specified herein will be considered to be included with the related item of Work as described in Section 01 20 00, Price and Payment Procedures, Article 1.04.

END OF SECTION 05 12 00

This page was intentionally left blank.

SECTION 05 40 00

COLD-FORMED METAL FRAMING

The provisions of BART Facilities Standards, Standard Specifications, Release R3.1.2, dated April 2018, Section 05 40 00, Cold-Formed Metal Framing, shall apply to the Work, except as modified herein:

PART 1 - GENERAL

1.03 MEASUREMENT AND PAYMENT: Delete Article 1.03A and substitute therefore the following:

A. Measurement and payment for costs in connection with the Work specified herein will be considered to be included with the related item of Work as described in Section 01 20 00, Price and Payment Procedures, Article 1.04

END OF SECTION 05 40 00

This page was intentionally left blank.

SECTION 05 50 00

METAL FABRICATIONS

The provisions of BART Facilities Standards, Standard Specifications, Release R3.1.2, dated April 2018, Section 05 40 00, Metal Fabrications, shall apply to the Work, except as modified herein:

PART 1 - GENERAL

1.03 MEASUREMENT AND PAYMENT: Delete Articles 1.03A, B and C and substitute therefore the following:

A. Measurement and payment for costs in connection with the Work specified herein will be considered to be included with the related item of Work as described in Section 01 20 00, Price and Payment Procedures, Article 1.04.

END OF SECTION 05 50 00

This page was intentionally left blank.

SECTION 06 10 00

ROUGH CARPENTRY

The provisions of BART Facilities Standards, Standard Specifications, Release R3.1.2, dated April 2018, Section 06 10 00, Rough Carpentry, shall apply to the Work, except as modified herein:

PART 1 - GENERAL

1.03 MEASUREMENT AND PAYMENT: Delete Articles 1.03A and B and substitute therefore the following:

A. Measurement and payment for costs in connection with the Work specified herein will be considered to be included with the related item of Work as described in Section 01 20 00, Price and Payment Procedures, Article 1.04

END OF SECTION 06 10 00

This page was intentionally left blank.

SECTION 07 60 00

FLASHING AND SHEET METAL

The provisions of BART Facilities Standards, Standard Specifications, Release R3.1.2, dated April 2018, Section 07 60 00, Flashing and Sheet Metal, shall apply to the Work, except as modified herein:

PART 1 - GENERAL

1.03 MEASUREMENT AND PAYMENT: Delete Article 1.03A and substitute therefore the following:

A. Measurement and payment for costs in connection with the Work specified herein will be considered to be included with the related item of Work as described in Section 01 20 00, Price and Payment Procedures, Article 1.04

END OF SECTION 07 60 00

This page was intentionally left blank.

SECTION 07 84 00

FIRESTOPPING

The provisions of BART Facilities Standards, Standard Specifications, Release R3.1.2, dated April 2018, Section 07 84 00, Firestopping, shall apply to the Work, except as modified herein:

PART 1 - GENERAL

1.03 MEASUREMENT AND PAYMENT: Delete Article 1.03A and substitute therefore the following:

A. Measurement and payment for costs in connection with the Work specified herein will be considered to be included with the related item of Work as described in Section 01 20 00, Price and Payment Procedures, Article 1.04

END OF SECTION 07 84 00

This page was intentionally left blank.

SECTION 07 90 00

JOINT PROTECTION

The provisions of BART Facilities Standards, Standard Specifications, Release R3.1.2, dated April 2018, Section 07 90 00, Joint Protection, shall apply to the Work, except as modified herein:

PART 1 - GENERAL

1.04 MEASUREMENT AND PAYMENT: Delete Article 1.04A and substitute therefore the following:

A. Measurement and payment for costs in connection with the Work specified herein will be considered to be included with the related item of Work as described in Section 01 20 00, Price and Payment Procedures, Article 1.04

END OF SECTION 07 90 00

This page was intentionally left blank.

SECTION 08 11 00

METAL DOORS AND FRAMES

The provisions of BART Facilities Standards, Standard Specifications, Release R3.1.2, dated April 2018, Section 08 11 00, Metal Doors and Frames, shall apply to the Work, except as modified herein:

PART 1 - GENERAL

1.02 MEASUREMENT AND PAYMENT: Delete Article 1.02A and substitute therefore the following:

A. Measurement and payment for costs in connection with the Work specified herein will be considered to be included with the related item of Work as described in Section 01 20 00, Price and Payment Procedures, Article 1.04.

END OF SECTION 08 11 00

This page was intentionally left blank.

SECTION 08 71 00

DOOR HARDWARE

The provisions of BART Facilities Standards, Standard Specifications, Release R3.1.2, dated April 2018, Section 08 71 00, Door Hardware, shall apply to the Work, except as modified herein:

PART 1 - GENERAL

1.02 MEASUREMENT AND PAYMENT: Delete Article 1.02A. and substitute therefor the following:

A. Measurement and payment for costs in connection with the Work specified herein will be considered to be included with the related item of Work as described in Section 01 20 00, Price and Payment Procedures, Article 1.04.

PART 2 - PRODUCTS

2.01 PRODUCTS: Delete Article 2.01C. and substitute therefor the following:

C. Locksets and Cylinders: Designated Matching Product (DMP), Falcon T-Series.

1. Locksets shall be, 7 pin interchangeable (I/C) core cylinder, un-coded (no pins), L keyway, A626 finish.

2. Lockset Backset: 2-3/4 inches.

2.03 KEYING REQUIREMENTS: Delete Article 2.03 KEYING REQUIREMENTS and substitute therefor the following:

2.03 INTERCHANGEABLE CORE

A. After ordering the door hardware and prior to installation of the hardware the Contractor shall request in writing, at least 30-Days in advance, the number of temporary I/C cores and Keys required for the Contractor’s use during the construction.

B. Based on the Contractor’s request the District Locksmith will prepare and Provide the requested number of temporary I/C cores pinned and keyed the same, and matching keys, for the Contractors’ use during the construction.

C. The Contractor shall remove new 7-pin, un-coded, L-Keyway I/C core supplied with new lockset and exchange, on a one-for-one basis, with BART Locksmith supplied temporary I/C core.

D. The Contractor shall Install the District Locksmith supplied temporary I/C cores into the new locksets and complete the installation of the door hardware to allow the Contractor to secure the site by having a separate and independent key for the Jobsite.

E. When the Project is turned over to BART, the District Locksmith will replace the temporary I/C cores with correctly keyed permanent cores. The Contractor shall return all keys supplied by the District Locksmith. The Contractor is responsible for replacement of any missing temporary I/C cores and keys supplied by the District Locksmith at the end of the project.

3.04 HARDWARE SCHEDULE: Delete Article 3.04B and substitute therefore the following:

B. Hardware Group

Group 1 Machine Room Door Each door to have:

1-1/2 pair Butts: Ives 5BB1, 4-1/2” x 4-1/2”, in 626 finish

1 set Lock Cylinder: Storeroom Lock, ANSI F86-1, Falcon T-581BD in 626 finish, Dane trim. DMP

1 set Closer: Ingersoll-Rand, LCN Closer Model 4041 Super Smoothie with regular arm

1 set Doorstop: Ives FS444 Floor Stop for masonry type mounting in US26 finish

1 set Threshold: Pemko 2705 T Heavy Duty Threshold

1 set Smoke Seal: Pemko Adhesive Perimeter Gasketing S88

END OF SECTION 08 71 00

SECTION 09 29 00

GYPSUM BOARD

The provisions of BART Facilities Standards, Standard Specifications, Release R3.1.2, dated April 2018, Section 09 29 00, Gypsum Board, shall apply to the Work, except as modified herein:

PART 1 - GENERAL

1.03 MEASUREMENT AND PAYMENT: Delete Article 1.03A and substitute therefore the following:

A. Measurement and payment for costs in connection with the Work specified herein will be considered to be included with the related item of Work as described in Section 01 20 00, Price and Payment Procedures, Article 1.04.

END OF SECTION 09 29 00

This page was intentionally left blank.

SECTION 09 67 23

RESINOUS FLOORING

This Contract Specifications Section provides requirements for Resinous Flooring.

PART 1 – GENERAL

1.01 SECTION INCLUDES

A. 1/4” General Service Trowel Applied Epoxy Flooring.

1.02 MEASUREMENT AND PAYMENT

A. Measurement and payment for costs in connection with the Work specified herein will be considered to be included with the related item of Work as described in Section 01 20 00, Price and Payment Procedures, Article 1.04.

1.03 REFERENCES

A. ASTM C 579 - Standard Test Methods for Compressive Strength of Chemical-Resistant Mortars, Grouts, Monolithic Surfacings, and Polymer Concretes.

B. ASTM C307: Standard Test Method for Tensile Strength of Chemical-Resistant Mortar, Grouts, and Monolithic Surfacings.

C. ASTM C580: Standard Test Method for Flexural Strength and Modulus of Elasticity of Chemical-Resistant Mortars, Grouts, Monolithic Surfacings, and Polymer Concretes.

D. ASTM D2240: Standard Test Method for Rubber Property - Durometer Hardness.

E. ASTM D570: Standard Test Method for Water Absorption of Plastics.

1.04 SUBMITTALS

A. Product Data: Submit manufacturer's qualifications as Indicated. Submit manufacturer's technical data, installation instructions, and general recommendations for each resinous flooring material required. Include certification indicating compliance of materials with requirements. All products shall be from a single manufacturer, as Indicated.

B. Selection of Samples: For each floor system specified, submit color and texture samples representing manufacturer full range of available colors and patterns.
For initial selection of colors and finishes, submit manufacturer's color charts showing full range of colors and finishes available.

C. Verification of Samples: Submit, for verification purposes, 4-inch square samples of each type of resinous flooring required, applied to a rigid backing, in color and finish Indicated.

D. Installer: Submit installer's qualifications as Indicated.

1.05 QUALITY ASSURANCE

A. Single Source Responsibility: The Contractor shall obtain primary resinous flooring materials including primers, waterproof membranes, resins, hardening agents, finish or sealing coats from a single manufacturer with not less than ten years successful experience in manufacturing and installing principle materials described in this Contract Specifications Section. Contractor shall ensure that installation is performed by a firm that has completed at least five projects of similar size and complexity. Provide secondary materials only of type and from source recommended by manufacturer of primary materials.

1.06 DELIVERY, STORAGE AND HANDLING

A. Materials shall be delivered to Jobsite and checked by flooring Contractor for completeness and shipping damage prior to installation.

B. All materials used shall be factory pre-weighed and pre-packaged in single easy to manage batches to eliminate on-site mixing errors. No on-site weighing or volumetric measurements allowed.

C. Material shall be stored in a dry, enclosed area protected from exposure to moisture. Temperature of storage area shall be maintained between 60 and 85 F/16 and 30 C.

1.07 PROJECT CONDITIONS

A. Concrete substrate shall be properly cured for a minimum of 30 Days. A vapor barrier must be present for concrete subfloors on or below grade. Otherwise, an osmotic pressure resistant grout must be installed prior to the resinous flooring.

B. Utilities, including electric, water, heat (air temperature between 60 and 85 F/16 and 30 C) and finished lighting to be supplied by Contractor.

C. Job area to be free of other trades during, and for a period of 24 hours, after floor installation.

PART 2 – PRODUCTS

2.01 RESINOUS FLOORING

A. General Service Trowel-Applied Epoxy Flooring (EP-1) comprised of a penetrating, moisture tolerant, two-component epoxy primer, a high performance, three-component mortar consisting of epoxy resin, curing agent and selected, graded aggregates and inorganic pigments and a two-component, 100% solids, general service, epoxy topcoat. Total Thickness: 1/4” minimum.

1. System Components shall be manufacturer's standard components that are compatible with each other:

   a. Epoxy Primer: Manufacturer's standard two-component epoxy primer.

   b. Mortar Base: Three-component, amine-cured epoxy pigmented mortar applied by steel trowel or power trowel at 1/4” thickness.

   c. Topcoat: Two-component, 100% solids, epoxy resin, pigmented coating applied by squeegee and medium nap roller at 4-5 mils thickness.

2. Physical Properties: Provide flooring system in which physical properties of topping including aggregate, when tested with standards or procedures referenced below, are as follows:

   a. Compressive Strength: 10,000 psi (ASTM C579)

   b. Tensile Strength: 1,750 psi (ASTM C307)

   c. Flexural Strength: 4,000 psi (ASTM C580)

   d. Hardness: 85-90 (ASTM D2240/Shore D)

   e. Water Absorption: 0.2 % (ASTM D570)

B. Integral Coved Base:

1. Utilizing the materials in flooring, apply to height Indicated and integral to the specific resinous floor system.

2. Radius at floor/wall interface shall be at a 3/4” minimum.

3. Metal Cove Termination Strip: 1/8” x 1/2”, “L” shaped, zinc or equivalent metal, cove strip fastened to wall substrate at cove height Indicated.

C. Acceptable Manufacturer and Product

1. Stonhard

   a. Stonclad GS with Stonkote GS4

2. Or equal.

D. Color: To be selected from manufacturer's standard color range by Engineer.

2.02 JOINT SEALANT MATERIALS

A. Type produced by manufacturer of resinous flooring system for type of service and joint condition Indicated.

PART 3 – EXECUTION

3.01 PREPARATION

A. Substrate: Concrete preparation shall be by mechanical means and include the use of a scabbler, scarifier or shot blast machine for removal of bond inhibiting materials such as curing compounds or laitance.

3.02 APPLICATION

A. General: Apply each component of resinous flooring system in compliance with manufacturer's directions to produce a uniform monolithic wearing surface of thickness Indicated, uninterrupted except at divider strips, sawn joints or other types of joints (if any), Indicated or required.

B. Primers: Mix and apply primer over properly prepared substrate with strict adherence to manufacturer's installation procedures and coverage rates. Coordinate timing of primer application with application of troweled mortar or urethane membrane to ensure optimum adhesion between resinous flooring materials and substrate.

C. Troweled Mortar: Mix mortar material according to manufacturer's recommended procedures. Uniformly spread mortar over substrate using manufacturer's specially designed screed box adjusted to manufacturer's recommended height. Hand or power trowel apply mixed material over primed substrate using steel finishing trowels.

D. Coating: Remove any surface imperfections by lightly abrading and vacuuming the floor surface. Mix, squeegee apply and back-roll coating with strict adherence to manufacturer's installation procedures and coverage rates.

3.03 FIELD QUALITY CONTROL

A. The right is reserved to invoke the following material testing procedure at any time, and any number of times during period of floor application.

B. The District will engage the service of an independent testing laboratory to sample materials being used on the Jobsite. Samples of material will be taken, identified and sealed, and certified in presence of Contractor.

C. Testing laboratory will perform test for any of the characteristics specified, using applicable testing procedures referenced herein, or if none referenced, in manufacturer's product data.

D. If test results show materials being used do not comply with specified requirements, Contractor may be Directed by District to stop work; remove non-complying materials; pay for testing; reapply flooring materials to properly prepared surfaces which had previously been coated with unacceptable materials at no additional cost the District.

3.04 CURING, PROTECTION AND CLEANING

A. Cure resinous flooring materials in compliance with manufacturer's directions, taking care to prevent contamination during stages of application and prior to completion of curing process. Close area of application for a minimum of 24 hours.

B. Protect resinous flooring materials from damage and wear during construction operation. Where temporary covering is required for this purpose, comply with manufacturer's recommendations for protective materials and method of application. Contractor is responsible for protection and cleaning of surfaces after final coats.

C. Cleaning: Remove temporary covering and clean resinous flooring just prior to Final Inspection. Use cleaning materials and procedures recommended by resinous flooring manufacturer.

END OF SECTION 09 67 23

SECTION 09 67 70

ELEVATOR SPRAY-ON FLOORING

The provisions of BART Facilities Standards, Standard Specifications, Release R3.1.2, dated April 2018, Section 09 67 70, Elevator Spray-On Flooring, shall apply to the Work, except as modified herein:

PART 1 - GENERAL

1.03 MEASUREMENT AND PAYMENT: Delete Article 1.03A and substitute therefore the following:

A. Measurement and payment for costs in connection with the Work specified herein will be considered to be included with the related item of Work as described in Section 01 20 00, Price and Payment Procedures, Article 1.04.

END OF SECTION 09 67 70

This page was intentionally left blank.

SECTION 09 91 00

PAINTING

The provisions of BART Facilities Standards, Standard Specifications, Release R3.1.2, dated April 2018, Section 09 91 00, Painting, shall apply to the Work, except as modified herein:

PART 1 - GENERAL

1.05 MEASUREMENT AND PAYMENT: Delete Article 1.05A and substitute therefore the following:

A. Measurement and payment for costs in connection with the Work specified herein will be considered to be included with the related item of Work as described in Section 01 20 00, Price and Payment Procedures, Article 1.04.

PART 2 - PRODUCTS

2.02 PAINT MATERIALS: Add the following Articles 2.02A 18 and 19:

18. Concrete Waterproof Penetrating Sealer: Thin coat, liquid applied, high-performance, non-yellowing, waterproof clear sealer.

19. Aluminum Substrate: Two component polyurethane acrylic enamel. MPS: 30.

PART 3 - EXECUTION

3.01 PREPARATION OF SURFACES: Add the following Article E.:

E. Concrete Waterproof Penetrating Sealer: Apply per manufacturer's requirements.

END OF SECTION 09 91 00

This page was intentionally left blank.

SECTION 10 14 00

SIGNAGE

This Contract Specifications Section provides requirements for Signage.

PART 1 - GENERAL

1.01 SECTION INCLUDES

A. Notification signs.

B. Directional signs.

1.02 MEASUREMENT AND PAYMENT

A. Measurement and payment for costs in connection with the Work specified herein will be considered to be included with the related item of Work as described in Section 01 20 00, Price and Payment Procedures, Article 1.04.

1.03 REFERENCE STANDARDS

A. American Architectural Manufacturers Association (AAMA):

1.	AAMA 607.1	Voluntary Guide Specifications and Inspection Methods for Clear Anodic Finishes for Architectural Aluminum.

B. American Society for Testing and Materials (ASTM):

1.	ASTM A167	Specification for Stainless and Heat-Resisting Chromium-Nickel Steel Plate, Sheet, and Strip.
2.	ASTM A276	Specification for Stainless and Heat-Resisting Steel Bars and Shapes.
3.	ASTM A312	Specification for Seamless and Welded Austenitic Stainless Steel Pipe.
4.	ASTM B209	Specification for Aluminum and Aluminum-Alloy Sheet and Plate.
5.	ASTM B221	Specification for Aluminum and Aluminum-Alloy Extruded Bars, Rods, Wire, Shapes, and Tubes.
6.	ASTM B308	Specification for Aluminum-Alloy 6061-T6 Standard Structural Shapes.
7.	ASTM B429	Specification for Aluminum-Alloy Extruded Structural Pine and Tube.

8. ASTM D1056 — Specification for Flexible Cellular Materials – Sponge or Expanded Rubber.

9. ASTM F593 — Specification for Stainless Steel Bolt, Hex Cap Screws, and Studs.

10. ASTM F594 — Specification for Stainless Steel Nuts.

11. ASTM F879 — Specification for Stainless Steel Button and Flat Countersunk Head Cap Screws.

C. Federal Specifications (FS):

1. L-P 391 — Plastic Sheets, Rods and Tubing, Rigid Cast, Methyl acrylate (Multi-Application).

D. National Association of Architectural Metal Manufacturers (NAAMM):

1. AMP 503 — Finishes for Stainless Steel

E. California Code of Regulations (CCR):

1. Title 24 — Part 2, California Building Code

F. ANSI/ICC A117.1 - American National Standard for Accessible and Usable Buildings and Facilities; International Code Council; 2003.

G. ATBCB ADAAG - Americans with Disabilities Act Accessibility Guidelines; 2002.

1.04 DESIGN REQUIREMENTS

A. Sign assemblies and support attachments shall be designed to resist all wind, seismic, and gravity loading requirements as indicated in the California Building Code, most recent edition.

1.05 SUBMITTALS

A. Product Data: Manufacturer's printed product literature for each type of sign, indicating sign styles, font, foreground and background colors, locations, overall dimensions of each sign.

B. Signage Schedule: Provide information sufficient to completely define each sign for fabrication, including room number, room name, other text to be applied, sign and letter sizes, fonts, and colors.

1. When room numbers to appear on signs differ from those on the Contract Drawings, include the drawing room number on schedule.

2. When content of signs is Indicated to be determined later, request such information from District through Engineer at least 2 months prior to start of fabrication; upon request, submit preliminary schedule.

3. Submit for approval by District through Engineer prior to fabrication.

C. Shop Drawings: Submit fully detailed Shop Drawings of all sign components, fittings, parts, and installation procedures showing layout, jointing, and complete anchoring and supporting of the various applications and mounting details. Shop Drawings shall indicate sizes, thickness, finishes and color of materials and shall include methods of attachment, demonstrating proper anchoring, expansion, and sealing. Indicate direction of stainless steel and aluminum directional grain.

D. Samples: Submit three samples of each type of sign, of size similar to that required for project, illustrating sign style, font, and method of attachment.

E. Sign Face Art Work: The Contractor shall submit computer generated design drawings to illustrate layout and artwork required for signs based on the Contract Drawings and signage schedule. The drawings shall accurately show the relationship of all parts to each other and the sign border and description of method of executing the work. Art Work shall be approved by the Engineer before proceeding with the work.

F. Calculations and Details: Submit structural calculations and details, prepared and signed by a California Registered Structural Engineer. Indicate capacity of assembly to withstand all wind load and seismic load requirements as prescribed in the 2019 CBC. Include structural calculations and details for assemblies and attaching to mounting.

1.06 QUALITY ASSURANCE

A. Manufacturer Qualifications: Company specializing in manufacturing the products specified in this section with minimum three years of documented experience.

1.07 FIELD CONDITIONS

A. Do not install tape adhesive when ambient temperature is lower than recommended by manufacturer.

B. Maintain this minimum temperature during and after installation of signs.

PART 2 - PRODUCTS

2.01 MATERIALS

A. Extruded Aluminum: ASTM B221.

B. Aluminum Sheet: Alloy and temper recommended for type of use and finish Indicated, and with the strength and durability properties specified in ASTM B 209.

C. Acrylic Sheet: FSA L-P-391, Type 1, Grade C.

D. Bolts, Studs, and Nuts: ASTM F593, F594, F879, and F880 as applicable. Type 316. Type 304 if Type 316 is not available.

E. MDO exterior plywood: APA B360.

2.02 GRAPHIC FILMS, INK, AND PAINT

A. General: Type recommended by manufacturer for exterior use and surface to which material is to be applied. Non-fading. Resistant to ultraviolet light and heat. Include prime coats and other surface pre-treatment where recommended by manufacturer of film, ink, or paint.

B. Graphic Film: Opaque white vinyl film with pressure sensitive adhesive.

C. Silkscreen Ink: Ink specifically formulated for silkscreen application.

D. Paint:

1. Plywood Substrates: Latex-based primer and acrylic latex finish coat.

2. Aluminum Substrates: Two-component polyurethane acrylic enamel.

2.03 FINISHES

A. Anodized Coating AAMA 607.1, AA-C22A41 (Clear).

B. Stainless Steel: NAAMM AMP 503 No. 4 finish where exposed to view.

2.04 GENERAL FABRICATION

A. General: All exposed surfaces shall be true, square and free from warping, bending, blemishes and scratches. Any exposed edges shall be painted to match color and texture of the exposed face.

B. All exposed fasteners and anchors shall be painted to match adjacent surfaces. Fasteners at exposed stainless steel and anodized aluminum shall be stainless steel finishes as specified herein.

C. All letter and pictograms shall be formed sharp and clean with no edge buildup, bleeding or burrs.

D. Vinyl letters and films shall be evenly applied with no air bubbles or rough edges.

E. Welding: Weld aluminum and stainless steel according to the applicable requirements Indicated. Where exposed, joints shall be ground and dressed smooth to match adjacent surfaces and so that the shape and provide of the item welded is maintained.

2.05 PAINTING

A. Apply inks and painting evenly without pinhole, scratches, peeling or application marks.

B. Touch up and finish any damaged surfaces of signs to match adjoining surfaces after erection.

2.06 SIGNAGE APPLICATIONS

A. Accessibility Compliance: All signs are required to comply with ADAAG and ANSI/ICC A 117.1 and applicable building codes, unless otherwise indicated; in the event of conflicting requirements, comply with the most comprehensive and specific requirements.

B. Notification Signage: Plywood panel signs coated on both sides with UV resistant ink, reinforced with UV, chemical, abrasion, and moisture resistant laminate layer, with graphics and copy on surface(s).

1. Substrate: 3/4” MDO exterior plywood with 1 coat latex-base primer and 2 finish coats acrylic latex on both sides and all exposed edges.

2. Printed layer: 4.0 MIL pressure sensitive adhesive backed polyester film.

3. Laminate: 2.5 MIL clear PVC film, UV, chemical, abrasion, and moisture resistant.

4. Mounting: As Indicated.

5. Edges: No sharp edges.

6. Corners: 1/2" radius corner.

C. Directional Signage: Aluminum panel signs coated on both sides with UV resistant ink, reinforced with UV, chemical, abrasion, and moisture resistant laminate layer, with graphics and copy on surface(s).

1. Substrate: 1/16” aluminum panel coated on both sides.

2. Printed layer: 4.0 MIL pressure sensitive adhesive backed polyester film.

3. Laminate: 2.5 MIL clear PVC film, UV, chemical, abrasion, and moisture resistant

4. Mounting: As Indicated.

5. Edges: Beveled or eased edges with no sharp edges.

6. Corners: 1/2" radius corner.

2.07 ACCESSORIES

A. Concealed Screws: Stainless steel, galvanized steel, chrome plated, or other non-corroding metal.

B. Exposed Screws: Stainless steel.

PART 3 - EXECUTION

3.01 EXAMINATION

A. Verify that substrate surfaces are ready to receive work.

3.02 INSTALLATION

A. Install in accordance with manufacturer's instructions.

B. Install neatly, with horizontal edges level.

C. Locate signs where Indicated on plans and District's instructions.

D. Protect from damage until Substantial Completion; repair or replace damaged items.

END OF SECTION 10 14 00

SECTION 10 40 00

SAFETY SPECIALTIES

The provisions of BART Facilities Standards, Standard Specifications, Release R3.1.2, dated April 2018, Section 10 40 00, Safety Specialties, shall apply to the Work, except as modified herein:

PART 1 - GENERAL

1.03 MEASUREMENT AND PAYMENT: Delete Article 1.03A and substitute therefore the following:

A. Measurement and payment for costs in connection with the Work specified herein will be considered to be included with the related item of Work as described in Section 01 20 00, Price and Payment Procedures, Article 1.04.

PART 3 - EXECUTION

3.02 INSTALLATION: Add the following Article 3.02B after Article 3.02A:

B. Install one fire extinguisher 20A-120BC in the elevator machine room.

END OF SECTION 10 40 00

This page was intentionally left blank.

SECTION 14 24 00

HYDRAULIC ELEVATORS

The provisions of BART Facilities Standards, Standard Specifications, Release 3.1.2, dated April 2018, Section 14 24 00 – Hydraulic Elevators, shall apply to the Work, except as modified herein:

PART 1 – GENERAL: Delete Articles 1.01.I and O in its entirety and replace with:

I. Not Used

O. Not Used

1.03 MEASUREMENT AND PAYMENT: Delete Article 1.03 in its entirety and replace with:

A. Measurement and payment for costs in connection with the Work specified herein will be considered to be included with the related item of Work as described in Section 01 20 00, Price and Payment Procedures, Article 1.04C.

1.07 SYSTEM DESCRIPTION: Delete Article 1.07 in its entirety and replace with:

A. Elevator Type: Hydraulic – Existing Elevator #03 – Existing Elevator #30

B. Load Capacity: Existing Elevator #03 = 2,500 – Existing Elevator #30 = 2,500

C. Speed:

1. Elevator #03 - 100 feet per minute, with maximum 5 percent speed variation under any loading condition in either direction.

2. Elevator #30 - 100 feet per minute, with maximum 5 percent speed variation under any loading condition in either direction.

D. Stops: As Indicated.

E. Main Floor: Ground floor, unless otherwise specified in the Contract Specifications.

F. Entrance size: Elevator #03-Minimum 42 inches width by 7 feet high. Elevator #30– Minimum 46 inches width by 7 feet high.

G. Travel: As Indicated and verified in field.

H. Controller: The controller shall be a Designated Matching Product (DMP) as specified herein. Reference Appendix A, Designated Matching Product (DMP) List.

I. Machine Room Location: As shown on Contract Drawings.

J. Car Inside Dimension: To Match Existing

K. Remote Monitoring System: The Elevator Remote Monitoring System shall interface with the existing BART monitoring system (EERMS). As specified herein.

L. Electronic car door edge sensors: Sensors shall be a Designated Matching Product (DMP) as specified herein, Reference Appendix A, Designated Matching Product (DMP) List.

M. Car Enclosure: Passenger type.

N. Comply with standards established in the NEII Building Transportation Standards and Guidelines, unless specified otherwise herein.

O. Doors: Car and hoistway doors are horizontal sliding, two speed center open, stainless steel with a vision panel in each door.

1.08 DESIGN AND OPERATION REQUIREMENTS: Add to Article 1.08.D. a new Sub-subarticle 13 to read:

13. The Contractor shall provide the signals to report any failures or out of service conditions to the existing District's Escalator/Elevator Remote Monitoring System (EERMS). The existing EERMS was developed and is owned by the District. The EERMS communicates with the elevator controller through discrete inputs and outputs over Modbus/IP protocol and is facilitated by the District's Supervisory Control and DATA Acquisition (SCADA) system. New SCADA system devices and modules will be located in the Elevator Interface Cabinet. See Contract Specifications Section 27 60 00, Supervisory Control and Data Acquisition (SCADA) System, for requirements.

SCADA System Input/Output Points List: The following shall be, at minimum, the input and output points to be provided to the EERMS.

		Elevators		
Location	Terminal Cabinet	Point Description	Point Type	Activated State/Measurement Span
XXX	44A	XXX elevator n top call	DI	Top call requested
XXX	44A	XXX elevator n bottom call	DI	Bottom call requested
XXX	44A	XXX elevator n at top position	DI	Top position
XXX	44A	XXX elevator n at bottom position	DI	Bottom Position
XXX	44A	XXX elevator n moving up	DI	Moving up
XXX	44A	XXX elevator n moving down	DI	Moving down
XXX	44A	XXX elevator n car occupied	DI	Car occupied
XXX	44A	XXX elevator n car alarm	DIA	Alarm
XXX	44A	XXX elevator shutdown	DIA	Alarm
XXX	44A	XXX elevator n top call	DO	Top call requested
XXX	44A	XXX elevator n bottom call	DO	Bottom call requested
XXX	44A	XXX elevator shutdown	DO	Shutdown command

1.10 SPARE PARTS: Delete Article 1.10.E.3 in its entirety and replace it with:

E. Minimum Required Spare Parts List. The Contractor shall Provide, at a minimum, the following spare parts for each elevator installed:

1. Controller components as recommended by manufacturer: One set of printed circuit board, relays, and fuses as approved by the Engineer.

2. Car and hall buttons and lamps, arrival gong lamps: Two sets of each type.

3. Car LED lamps: Four each.

4. Limit switches: Two each.

5. Rollers for roller guides: Two of each size.

6. Packing gland.

7. Car and hall door astragal material: Three sets.

8. Door clutch assembly.

1.12 MAINTENANCE SERVICES: Delete Article 1.12 in its entirety and replace with:

A. Maintenance Program: Within 60 Days after Notice to Proceed (NTP), and prior to installation, Contractor shall submit a detailed Maintenance Program, showing functions to be performed and their schedule. The Maintenance Program shall also include trouble call service and emergency repair service.

B. Maintenance Period: Contractor shall perform routine maintenance on the elevator for a period of twenty-four months after Substantial Completion and the unit is open for public use. Contractor will not be relieved of maintenance until Final Acceptance of the elevator is issued. At any time, the District reserves the right to terminate the Maintenance Period upon giving 30 Days' notice to the Contractor. During the Maintenance Period, provide complete continuing maintenance on entire elevator system. Maintenance shall include all labor and materials required to keep the equipment in perfect operating condition. Contractor shall coordinate and perform maintenance in a manner to result in minimum inconvenience to the public.

1. The Maintenance Period shall be extended at the Contractor's expense until the Operation and Maintenance Manual is accepted, all punch list items are complete, all deliverables are provided, and the training is complete.

C. Elevator Access:

1. The Contractor shall inform the District's Power Support desk and other departments, or persons as Directed by the Engineer each time the elevator is removed from service and again when the elevator is returned to service. District-provided forms shall be completed for each occurrence and submitted monthly as required in Article 1.11.K. herein.

2. Elevators are an essential part of BART facilities for service to mobility-impaired patrons. When routine maintenance is being performed during revenue hours, the Contractor shall be prepared to return the elevator to service within 15 minutes of a request by a patron at the elevator.

3. The Contractor shall notify District Representative and/or the Engineer 48 hours in advance to request access to the equipment for routine or non-urgent work.

D. Work Hours for Maintenance:

1. Routine maintenance, non-urgent repairs, and warranty work shall be performed on no more than one elevator at a time at a station. Routine maintenance shall not be performed during revenue peak hours. Routine maintenance may also be performed during non-revenue hours. Refer to the Contract Specifications for a definition of revenue peak hours for the station.

2. Repairs required to return equipment to service shall be accomplished as soon as possible during revenue and non-revenue hours.

E. Inspection during Maintenance Period: Perform systematic inspection of each elevator system every two weeks and perform adjustment and lubrication of elevator equipment when required as recommended by the manufacturer. Replace defective parts with new parts of same manufacture as required.

F. Follow-Up Tests: Test all safety devices at monthly intervals and submit written report on each test. Tests shall be performed during periods defined in Article 1.11.D.

G. Performance Standards:

1. Maintain the performance standards specified herein and maintain correct operation of all safety devices and circuits.

2. Maintain uniform starting, stopping and riding qualities at all times.

H. Elevator Shutdowns:

1. Should an elevator become inoperative, the Contractor shall attend to the elevator within 4 hours of notification of such incident, except if the incident occurs after 8:00 PM, the service representative may be on-site the following day no later than 7:30 AM. The elevator shall be returned to service as quickly as possible. No overtime shall be charged to District unless given prior written approval by the Engineer.

2. Should there be a failure to comply with above, the Engineer may order the Work to be done by others at the Contractor's expense. Such action by the Engineer will not affect the Contractor's responsibility to guarantee the work.

I. Final Service and Inspection: Two weeks before expiration of the Maintenance Period, the equipment shall be lubricated, fully serviced, adjusted to the standards designated herein and safety devices and emergency service operation shall be checked. Contractor shall re-lamp elevator car light fixture and pit light fixtures. The Engineer will make a complete inspection. All deficiencies shall be corrected. Any deficiencies not corrected shall result in the extension of the maintenance services until the deficiencies are corrected at no additional cost to the District.

J. Contractor will not be responsible for cleaning and repair of elevator car walls and hoistway entrances, except if service required is due to detective materials or improper installation. Service personnel shall clean oil and grease residue from maintenance or repair.

K. Keep a work log on each elevator with the following information: Worker's name, date, time arrived, total time spent back in-service time, parts inspected, adjustments and work done, and parts replaced. Every visit, regardless of purpose, shall be recorded in the log. The work logs shall be submitted to the Engineer at one-month intervals with the payment application.

L. Contractor shall maintain local stock of parts for maintenance throughout the Guaranty Period and the Maintenance Period. The Contractor shall not use the District's spare parts during the Maintenance Period.

M. Chargeable Repairs: Contractor will not be responsible for trouble calls that are due to misuse, or accidents. Calls that result in adjustment of safety devices not accessible to the public will not be reimbursed. Contractor shall submit all documentation necessary to substantiate why a particular trouble call should be a Chargeable Repair. Contractor shall also submit all documentation necessary to justify the direct and indirect costs incurred. Service calls must be reported to Power Support desk and other departments or persons as Directed by the Engineer to be eligible for reimbursement.

PART 2 – PRODUCTS

2.01 GENERAL: Add to Article 2.01 a new Subarticle C and D to read:

C. All existing components to be retained and not replaced as part of the hydraulic elevator modernization are to be cleaned and finishes restored to like new condition.

D. Modernization Scope of Work to include:

1. Controller to be replaced with new.
2. Power Unit (pump, tank, valves, fluid) to be replaced with new.
3. Jack assembly to be replaced with new.
4. Replace oil recovery and storage system with new.
5. All piping to be replaced with new.
6. All wiring to be replaced with new.
7. Replace existing slide or roller guides with new.
8. All cab and hoistway doors to be replaced with new.
9. Electronic door protection device to be replaced with new.
10. All car top equipment to be replaced with new.
11. Landing system to be replaced with new.
12. Cab and hall operating fixtures to be replaced with new.
13. All hoistway and car door equipment needs to be replaced with new.

14. Cab and all hall landing sills to be replaced with new.

15. Clean and paint machine room, car top, and bottom.

16. Steam clean hoistway from top landing to pit floor.

17. Steam clean pit floor.

18. Epoxy coat hoistway and pit floor.

19. Install and connect elevator automatic request for maintenance (RFM) equipment.

20. Install and connect new external elevator status display.

21. Install new cameras.

22. Install new motion sensors for ADA Compliance.

23. Install a Remote Monitoring System (System Device Protocol).

24. Potentially remove sump pump(s).

2.06 EQUIPMENT IN HOISTWAY AND MACHINE ROOM: Delete Article 2.06.D in its entirety and replace with:

D. Guide rails: Contractor shall check alignment of existing guide rails and verify all existing bracketing and supports are secure, free of corrosion, clean and paint non-contact surfaces including bracketing and supports to like new condition.

1. Not Used.

2. Not Used.

3. Not Used.

4. Not Used.

5. The maximum lateral deflection of elevator guide rails shall be 0.5 inches.

6. The existing bottom 3 feet of the guide rails from the pit floor and brackets shall be cleaned, painted with anti-corrosive paint or epoxy.

2.07 HOISTWAY ENTRANCES AT ALL LEVELS: Delete Article 2.07 in its entirety and replace with:

A. General: Fabricate finish work smooth with flush surfaces and free from warps dents, scratches and buckles.

B. Hoistway doors: Replace with New. Hoistway doors shall include door unit frame, flush sills, strut angles, headers, hanger covers, fascia plates, toe guards, dust covers, and required hardware. Exposed surfaces shall be stainless steel. All structural steel shall be

galvanized. All fasteners shall be type 316 stainless steel. Refer to Article 2.08, Car and Hoistway Doors, herein.

C. Frames: Retain existing. Clad, or if conditions warrant as Directed by the Engineer, replace with minimum 12-gauge, type 316 No. 4 brush finish stainless steel with side jambs in one continuous piece from sill to head section. Head and jamb fully welded mitered corner.

D. Front Return Panels: Provide full height 12-gauge, type 316 stainless steel, No. 4 brush finish, fixed returns.

E. Hangers and Tracks: Replace all existing with heavy-duty hangers and tracks that are sheave type with minimum two-point suspension to support the heavy vision panel doors. Provide steel sheaves with ball or roller bearings with resilient sound-absorbing tires and adjustable up-thrust, flanged groove tracks. All material shall have anti-corrosive treatment. Maximum load per hanger shall not exceed 100 pounds. Additional hangers shall be provided as required. Hanger bolts shall be a minimum 1/2-inch diameter.

F. Headers, Struts and Closer Angles shall be replaced for entrance installation and door closer mechanism, shall be manufactured from plate steel. Use full-length steel struts. Hanger headers, minimum one-fourth (1/4) inch thick material, shall extend from strut to strut with minimum three-eighths inch thick angles. All metal parts materials shall be galvanized.

G. Dust and Hanger Covers: Replace existing with 16-gauge minimum, type 316 stainless steel, No. 4 brush finish. Hanger cover plates shall extend full length of door track. All covers shall be removable using keyhole style slots.

H. Fascia, Toe and Head Guards: Replace existing with minimum 16-gauge type 316 stainless steel, No. 4 brush finish, reinforced.

I. Sills: Replace existing sills. Provide sills constructed of extruded nickel silver alloy with non-slip surfaces and grooves suitable for guides. Installed sills shall be continuous from strut to strut. Welded parts are not acceptable. Mount the sills with recessed, flat head stainless steel screws or hidden “T” type fasteners. Provide a 16-gauge stainless steel plate to cover the exposed vertical face of the elevator door sills. Provide all support angles, levelers and necessary concrete filler under sill and grouting for a complete secure, level, and plumb installation. No plywood shall be used under the hoistway sills. Apply silicone caulk around all gaps and on top of the fasteners to prevent any liquid from seeping into the underlayment or hoistway edging angle. Support angle and levelers shall be galvanized or stainless steel. Sill shall be supported along its entire width and length. All sills shall be mounted higher than finished floor to allow drainage of sill.

2.08 CAR AND HOISTWAY DOORS: Delete Articles 2.08.A, D, and H in its entirety and replace with:

A. General: All existing hoistway and car elevator doors are to be replaced with new that shall be stainless steel with vision panels.

D. Door Guides: Door panels shall be guided at bottom with adjustable non-metallic gibs sliding in a smooth threshold groove. Provide a minimum of two (2) gibs per panel located

1 inch from each end. Gibs shall be District Matching Product (DMP); “SEES Enforcer”” manufactured by SEES Inc. They shall be secured by stainless steel screws.

H. Car Lighting: Illumination level inside the car shall be minimum 10 foot-candles measured at the floor level. Car lighting shall be LED downlight fixtures with wide angle lens to provide even light distribution. Fixtures shall be vandal resistant. No transparent plastic lenses are permitted. The related work shall be performed in accordance with Section 26 50 00 – Lighting.

2.11 ELEVATOR FLOOR AND PLATFORM: Delete Article 2.11 in its entirety and replace with:

A. Car Frame and Platform: Paint structural steel frame with anti-corrosion primer and paint with gray finish color. Isolate platform from car frame by rubber pads and provide jacking bolts for pad replacement.

1. Allow recess for installation of finish flooring.

B. Subfloor: Construct in accordance with standard drawing MS39 floor and Wall Details. The stainless-steel floor pan shall be 11-gauge and extending the entire floor area, including the cove base. Seams shall be staggered. The floor pan shall be sectioned where required and constructed with watertight seams, fastened to the substrate with stainless flat head screws, four inches on center from pan joints and 16 inches center to center. The floor pan fasteners shall be caulked, heads ground flush with pan surfaces and indented pan fasteners shall be covered with leveling compound. Concealed areas behind door returns shall be caulked.

C. Finish Flooring: Refer to Section 09 67 70, Elevator Spray-on Flooring.

D. Wood products will not be permitted anywhere inside or outside the elevator car.

E. All gaps and running openings where the platform structure meet the surface of the finished openings shall be within the tolerances specified in the Elevator Safety Orders.

F. Platform floor shall slope so that one (1) quart of water poured onto the wall shall flow towards the car center so that liquid on the floor will not accumulate in the corners or near the floor perimeter of the car. The specified finish floor and stainless-steel floor pan shall be constructed with watertight seams. There shall be no ridges or tripping hazards.

2.14 REMOTE MONITORING SYSTEM: Add to Article 2.14 a new Sub-article D to read:

D. Integrated Display Systems shall be installed in the controller.

2.18 SIGNS: Delete Articles 2.18 A and B in its entirety and replace with:

A. General: Hoistway and car signs shall be stainless steel plates with black backgrounds and raised white lettering and Braille symbols with raised white borders, unless otherwise specified. Braille lettering shall be CA Grade II, comply with the Americans With Disabilities Act and shall be located below alphabetical characters, numeral, or symbols. Signs shall be on separate plates flush-mounted with hairline joints and concealed mechanical fasteners in cars and surface-mounted with tamper-proof fasteners at elevator entrance locations.

B. Provide stainless steel signs with Braille indicated landing identification on both sides of the hall door jamb at every landing. Signs shall have black background and white lettering. Lettering shall be two inches in height and centered 60 inches above doorsill. Signs shall be surface mounted with dimensions of 4 inches by 4 inches with corners of 1/16 inch radius.

PART 3 – EXECUTION

3.02 INSTALLATION: Delete Article 3.02.D in its entirety and replace with:

D. Alignment: Verify alignment of existing components.

1. Adjust sills and doors to provide smooth, quiet trouble-free operation.

2. Ensure guide rails plumb and parallel with maximum deviation from rail center- line of 1/16 inch per floor, non-cumulative.

3. Not Used.

4. For sills that are replaced, grout sills with non-shrink grout. Set units accurately aligned with finished floor at landings.

5. Mount sill plate with concealed fasteners.

6. Field repair damaged coatings and wrappings.

3.03 FIELD QUALITY CONTROL: Delete Article 3.03.A.4 in its entirety and replace with:

4. Contractor shall perform all safety tests on the elevator with and without load. All tests shall be recorded in detail and submitted to the Engineer for approval.

END OF SECTION 14 24 00

This page was intentionally left blank.

SECTION 20 07 13

PLUMBING AND HVAC INSULATION

The provisions of BART Facilities Standards, Standard Specifications, Release 3.1.2, dated April 2018, Section 20 07 13 – Plumbing and HVAC Insulation, shall apply to the Work, except as modified herein:

PART 1 - GENERAL

Delete Article 1.03 in its entirety and replace with:

1.03 MEASUREMENT AND PAYMENT

A. Separate measurement or payment will not be made for work required under this Contract Specifications Section. All costs in connection with the work specified herein will be included with the related items of work in the Bid Schedule of the Bid Form or incidental to the Work.

END OF SECTION 20 07 13

This page was intentionally left blank.

SECTION 20 10 13

COMMON MATERIALS AND METHODS FOR FACILITY SERVICES, FIRE SUPPRESSION, PLUMBING AND HVAC

The provisions of BART Facilities Standards, Standard Specifications, Release 3.1.2, dated April 2018, Section 20 10 13 – Common Materials and Methods for Facility Services-Fire Suppression, Plumbing and HVAC, shall apply to the Work, except as modified herein:

PART 1 - GENERAL

Delete Article 1.03 in its entirety and replace with:

1.03 MEASUREMENT AND PAYMENT

A. Measurement and payment for costs in connection with the Work specified herein will be considered to be included with the related item of Work as described in Section 01 20 00, Price and Payment Procedures, Article 1.04.

END OF SECTION 20 10 13

This page was intentionally left blank.

SECTION 20 20 13

PIPE SLEEVES, SUPPORTS, AND ANCHORS FOR FACILITY SERVICES

The provisions of BART Facilities Standards, Standard Specifications, Release 3.1.2, dated April 2018, Section 20 20 13 – Pipe Sleeves, Supports and Anchors for Facility Services, shall apply to the Work, except as modified herein:

PART 1 - GENERAL

Delete Article 1.03 in its entirety and replace with:

1.03 MEASUREMENT AND PAYMENT

A. Separate measurement or payment will not be made for work required under this Contract Specifications Section. All costs in connection with the work specified herein will be considered to be included with the related items of work in the Bid Schedule of the Bid Form or incidental to the Work.

END OF SECTION 20 20 13

This page was intentionally left blank.

SECTION 20 30 13

VIBRATION ISOLATION AND SEISMIC CONTROL FOR FACILITIES SERVICES

The provisions of BART Facilities Standards, Standard Specifications, Release 3.1.2, dated April 2018, Section 20 30 13 – Vibration Isolation and Seismic Control for Facility Services, shall apply to the Work, except as modified herein:

PART 1 - GENERAL

Delete Article 1.03 in its entirety and replace with:

1.03 MEASUREMENT AND PAYMENT

A. Measurement and payment for costs in connection with the Work specified herein will be considered to be included with the related item of Work as described in Section 01 20 00, Price and Payment Procedures, Article 1.04.

END OF SECTION 20 30 13

This page was intentionally left blank.

SECTION 20 40 13

IDENTIFICATION FOR FACILITY SERVICES

The provisions of BART Facilities Standards, Standard Specifications, Release 3.1.2, dated April 2018, Section 20 40 13 – Identification for Facility Services, shall apply to the Work, except as modified herein:

PART 1 - GENERAL

Delete Article 1.03 in its entirety and replace with:

1.03 MEASUREMENT AND PAYMENT

A. Measurement and payment for costs in connection with the Work specified herein will be considered to be included with the related item of Work as described in Section 01 20 00, Price and Payment Procedures, Article 1.04.

END OF SECTION 20 40 13

This page was intentionally left blank.

SECTION 20 50 13

RACEWAYS FOR FACILITY SERVICES

The provisions of BART Facilities Standards, Standard Specifications, Release 3.1.2, dated April 2018, Section 20 50 13 – Raceways for Facility Services, shall apply to the Work, except as modified herein:

PART 1 - GENERAL

Delete Article 1.01 in its entirety and substitute therefor the following:

1.01 SECTION INCLUDES

A. Conduit.

B. Conduit hangers.

C. Inserts.

D. Surface mounted metal raceways and fittings.

E. Outlet boxes; junction and pull boxes.

Delete Article 1.03 in its entirety and substitute therefor the following:

1.03 MEASUREMENT AND PAYMENT

A. Measurement and payment for costs in connection with the Work specified herein will be considered to be included with the related item of Work as described in Section 01 20 00, Price and Payment Procedures, Article 1.04C.

1.06 SUBMITTALS: Delete the specified requirements of Article 1.06E and substitute therefor the following:

E. Shop Drawings:

1. Submit shop drawings for review showing exact location and arrangement of conduits, cabinet, pullboxes, and conduit exposed. Submit such drawings before rough-in work, fabrication and within ample time to prevent delays in the work.

2. Submit seismic design and calculations for raceway support anchorage and seismic bracing to show compliance with the requirements of ASCE 7-10 and additional requirements in the Contract Documents. Submittals shall be signed and sealed by a Registered Professional Structural Engineer licensed in the State of California.

END OF SECTION 20 50 13

This Page Intentionally Left Blank

SECTION 20 70 13

COMMON MATERIALS AND METHODS FOR ELECTRONIC SERVICES

The provisions of BART Facilities Standards, Standard Specifications, Release 3.1.2 dated April 2018, Section 20 70 13 – Common Materials and Methods for Electronic Services, shall apply to the Work, except as modified herein:

PART 1 - GENERAL

Delete Article 1.02 in its entirety and substitute therefor the following:

1.02 MEASUREMENT AND PAYMENT

A. Measurement and payment for costs in connection with the Work specified herein will be considered to be included with the related item of Work as described in Section 01 20 00, Price and Payment Procedures, Article 1.04C.

END OF SECTION 20 70 13

This Page Intentionally Left Blank

SECTION 20 70 19

INDOOR CABINETS, RACKS, FRAMES AND ENCLOSURES

The provisions of BART Facilities Standards, Standard Specifications, Release 3.1.2, dated April 2018, Section 20 70 19 –Indoor Cabinets, Racks, Frames and Enclosures, shall apply to the Work, except as modified herein:

PART 1 - GENERAL

Delete Article 1.01 in its entirety and substitute therefor the following:

1.01 SECTION INCLUDES

A. Equipment cabinets

B. Cabinet Identification

Delete Article 1.03 in its entirety and substitute therefor the following:

1.03 MEASUREMENT AND PAYMENT

A. Measurement and payment for costs in connection with the Work specified herein will be considered to be included with the related item of Work as described in Section 01 20 00, Price and Payment Procedures, Article 1.04C.

END OF SECTION 20 70 19

This Page Intentionally Left Blank

SECTION 20 70 23

ELECTRONIC CIRCUITS, WIRES AND CABLES

The provisions of BART Facilities Standards, Standard Specifications, Release 3.1.2, dated April 2018, Section 20 70 23 – Electronic Circuits, Wires and Cables, shall apply to the Work, except as modified herein:

PART 1 - GENERAL

Delete Article 1.01 in its entirety and substitute therefor the following:

1.01 SECTION INCLUDES

A. Optical transmission cable.

B. Telephone cables.

C. Multiple Conductor Control cables.

D. Ethernet cable.

Delete Article 1.03 in its entirety and substitute therefor the following:

1.03 MEASUREMENT AND PAYMENT

A. Measurement and payment for costs in connection with the Work specified herein will be considered to be included with the related item of Work as described in Section 01 20 00, Price and Payment Procedures, Article 1.04C.

END OF SECTION 20 70 23

This Page Intentionally Left Blank

SECTION 20 70 26

COMMON MATERIALS AND METHODS FOR ELECTRICAL SYSTEMS

The provisions of BART Facilities Standards, Standard Specifications, Release 3.1.2, dated April 2018, Section 20 70 26 – Common Materials and Methods for Electrical Systems, shall apply to the Work, except as modified herein:

PART 1 – GENERAL

Delete Article 1.03 in its entirety and substitute therefor the following:

1.03 MEASUREMENT AND PAYMENT

A. Measurement and payment for costs in connection with the Work specified herein will be considered to be included with the related item of Work as described in Section 01 20 00, Price and Payment Procedures, Article 1.04C.

PART 2 - PRODUCTS

2.06 DISCONNECTING DEVICES: Add the following requirements to Article 2.06B:

5. Provide fuses and ratings Indicated in the drawings.

END OF SECTION 20 70 26

This Page Intentionally Left Blank

SECTION 20 72 25

FACTORY AND FIELD TESTING

The provisions of BART Facilities Standards, Standard Specifications, Release 3.1.2, dated April 2018, Section 20 72 25 – Factory and Field Testing, shall apply to the Work, except as modified herein:

PART 1 - GENERAL

Delete Article 1.03 in its entirety and replace with:

1.03 MEASUREMENT AND PAYMENT

A. Measurement and payment for costs in connection with the Work specified herein will be considered to be included with the related item of Work as described in Section 01 20 00, Price and Payment Procedures, Article 1.04.

END OF SECTION 20 72 25

This page was intentionally left blank.

SECTION 20 80 00

SYSTEMS INTEGRATION TESTING

The provisions of BART Facilities Standards, Standard Specifications, Release 3.1.2 dated April 2018, Section 20 80 00 – Systems Integration Testing, shall apply to the Work, except as modified herein:

PART 1 - GENERAL

Delete Article 1.02 in its entirety and substitute therefor the following:

1.02 RELATED SECTIONS

A. Section 01 20 00, Price and Payment Procedures

B. Section 01 33 00, Submittal Procedures

C. Section 01 35 14, Operating System Interface

D. Section 01 43 00, Quality Assurance and Quality Control

E. Section 01 52 00, Construction Facilities

K. Section 20 72 25, Factory and Field Testing

Delete Article 1.03 in its entirety and substitute therefor the following:

1.03 MEASUREMENT AND PAYMENT

A. Measurement and payment for costs in connection with the Work specified herein will be considered to be included with the related item of Work as described in Section 01 20 00, Price and Payment Procedures, Article 1.04C.

END OF SECTION 20 80 00

This Page Intentionally Left Blank

SECTION 21 13 13

WET-PIPE SPRINKLER SYSTEM

The provisions of BART Facilities Standards, Standard Specifications, Release 3.1.2, dated April 2018, Section 21 13 13 – Wet-Pipe Sprinkler System, shall apply to the Work, except as modified herein:

PART 1 - GENERAL

Delete Article 1.03 in its entirety and replace with:

1.03 MEASUREMENT AND PAYMENT

A. Measurement and payment for costs in connection with the Work specified herein will be considered to be included with the related item of Work as described in Section 01 20 00, Price and Payment Procedures, Article 1.04.

Delete Article 1.07 A in its entirety and replace with:

A. Not Used

PART 2 - PRODUCTS

2.01 WET PIPE AUTOMATIC SPRINKLER SYSTEM

Delete Articles 2.01 A and B in their entirety and replace with:

A. Design Standards: Design the automatic sprinkler system in accordance with NFPA 13 for a minimum Ordinary Hazard Group II using pipe schedule method as permitted by NFPA 13 11.2.2.3 as an addition or modification to existing pipe schedule system. Design shall comply in all other respects to BART Facilities Standard, Design Criteria, Mechanical, Stations and Station Sites.

B. Areas Requiring Protection:

1. Elevator pits.

Delete Article 2.02 in its entirety and replace with:

2.02 Not Used

Delete Articles 2.03 B, C, D, and E, and replace with:

B. Not Used

C. Not Used

D. Not Used

E. Not Used

Delete Article 2.04 C and replace with:

C. Not Used

Delete Article 2.06 B and replace with:

B. Not Used

Delete Article 2.07 in its entirety and replace with:

2.07 Not Used

Delete Article 2.08 C.

C. Not Used

Delete Article 2.10 in its entirety and replace with:

2.10 TOOLS AND SPARE PARTS

A. Provide six of each type of sprinkler heads of the types and ratings installed, to be placed in existing sprinkler cabinet.

Delete Article 2.11 in its entirety and replace with:

2.11 INSPECTOR'S TEST VALVES

A. Installed test valve shall be within 7 feet of the floor.

Delete Articles 3.01 A, B, G, K, O, and Q and replace with:

A. Not Used

B. Not Used

G. Not Used

K. Not Used

O. Not Used

Q. Not Used

END OF SECTION 21 13 13

This page was intentionally left blank.

SECTION 22 11 01

WATER DISTRIBUTION

The provisions of BART Facilities Standards, Standard Specifications, Release 3.1.2, dated April 2018, Section 22 11 01 – Water Distribution, shall apply to the Work, except as modified herein:

PART 1 - GENERAL

Delete Article 1.03 in its entirety and replace with:

1.03 MEASUREMENT AND PAYMENT

A. Measurement and payment for costs in connection with the Work specified herein will be considered to be included with the related item of Work as described in Section 01 20 00, Price and Payment Procedures, Article 1. 04.

END OF SECTION 22 11 01

This page was intentionally left blank.

SECTION 22 13 01

SANITARY SEWERAGE

The provisions of BART Facilities Standards, Standard Specifications, Release 3.1.2, dated April 2018, Section 22 13 01 – Sanitary Sewerage, shall apply to the Work, except as modified herein:

PART 1 - GENERAL

Delete Article 1.03 in its entirety and replace with:

1.03 MEASUREMENT AND PAYMENT

A. Measurement and payment for costs in connection with the Work specified herein will be considered to be included with the related item of Work as described in Section 01 20 00, Price and Payment Procedures, Article 1.04.

END OF SECTION 22 13 01

This page was intentionally left blank.

SECTION 22 14 29

SUMP PUMPS

The provisions of BART Facilities Standards, Standard Specifications, Release 3.1.2, dated April 2018, Section 22 14 29 – Sump Pumps, shall apply to the Work, except as modified herein:

PART 1 – GENERAL

Delete Articles 1.01 D, E, and F in their entirety and replace with:

D. Not Used

E. Not Used

F. Not Used

Delete Article 1.03 in its entirety and replace with:

1.03 MEASUREMENT AND PAYMENT

A. Measurement and payment for costs in connection with the Work specified herein will be considered to be included with the related item of Work as described in Section 01 20 00, Price and Payment Procedures, Article 1.04.

PART 1 - PRODUCTS

Delete Article 2.01 in its entirety and replace with:

2.01 SUMP PUMPS

A. Pump Type and Design:

1. Provide non-clogging, automatic, electric motor-driven, submersible, centrifugal sump pump as indicated.

2. Pump shall have a pumping capacity not less than 50 gallons per minute against the minimum, total dynamic head (TDH) when pumping water at 65 degrees Fahrenheit with a specific gravity of 1.04 and containing less than ten percent solids up to 2 inches in diameter at a maximum speed of 3500 RPM. Each pump shall operate at or near its best efficiency point when operating at the average TDH system curve. Each pump shall have the impeller sized such that the developed pump horsepower is no more than 95 percent of its nameplate horsepower at nameplate voltage and speed conditions anywhere within the normal operation range of the pump.

3. Pump shall be capable of running dry without damage to the motor or pump.

4. Pump shall be capable of handling wastewater continuously, 24 hours per day, when fully submerged and with regular scheduled maintenance.

5. Volute casing, motor enclosure and discharge shall be cast iron.

B. Impeller

1. Impeller shall be cast-iron non-clog design, with pump-out vanes for mechanical seal protection, balanced for smooth operation and capable of passing solids, fibrous material, and heavy sludge.

2. Impeller shall be fastened and locked to the shaft to preclude material movement and to prevent loosening by reverse rotation.

C. Shaft

1. Provide corrosion-resistant, stainless steel pump shaft.

2. Shaft shall not distort under maximum operating conditions.

D. Bearings

1. Pump shall be designed so that axial and radial loads are transferred to the motor bearings.

2. Bearings shall be designed for a minimum of 25,000 hours B-10 life of continuous operation under the specified conditions.

E. Seals

1. Provide pump with easily replaceable tandem mechanical seal, silicon carbide vs silicon carbide seal faces, stainless steel metal parts and BUNA-N elastomers.

Delete Article 2.02 B in its entirety and replace with:

B. Enclose motor in high-grade turbine oil for lubrication and efficient heat transfer with Class B insulation.

Delete Articles 2.02 E, G, H, and I in their entirety and replace with:

E. Not Used

G. Not Used

H. Not Used

I. Not Used

Delete Article 2.03 in its entirety and replace with:

2.03 CONTROLS

A. Control/alarm panel shall be enclosed in a UL 508A labeled NEMA 4X (FRP) control/alarm panel and shall include sensor with three floats for automatic on/off control of the pump with manual over-ride and high-water alarm signal. Sensor shall incorporate a conductivity sensor that will be used to detect the presence of an oil layer in the sump and will send a signal to override the pump operation and prevent the possible discharge of pure oil.

B. Panel shall include local visual indication of high level, pump running, high oil, and pump cutoff conditions. Normally closed auxiliary contacts shall be included for high-oil and high-water level alarms to be tied into Station SCADA alarm system.

C. Controls shall permit continuous operation of the pump and shall be set to activate pump when the sump water level rises to the preset pump start level. The pump shall shut down automatically when the sump water level is down to pump stop level (6 inches minimum below the first preset pump start level).

D. Provide motor starter, overload and disconnect function as specified under Division 20, Facility Services, Division 26, Electrical, and Division 33, Utilities.

E. Control/alarm panel shall be mounted outside of the elevator pit in BART approved secure location.

Delete Articles 2.04, 2.05, and 2.06 in their entirety and replace with:

2.04 Not Used

2.05 ELEVATOR SUMP PUMP FILTER DISCHARGE SYSTEM

A. Elevator sump pump filter discharge system shall be provided for each elevator sump pump.

B. Pump filter discharge system shall be a single housing vessel with seven (7) Highland Tank Advanced Hydrocarbon Filtration System (AHFS) 2 1/2 inch diameter by 40 inch long, type

III oil removal filter cartridges, or PRM Filtration #2 high efficiency 3-micron oil absorbing filter bag with size 2 oil log, or equal filtration system.

C. Filter housing shall be 304 stainless steel rated for 150 psi maximum operating pressure and shall include a tight seal lid closure, 1/4 inch air bleeder fitting, mounting legs, and 2 inch NPT inlet and outlet fittings, and 0-15 psi pressure gauges as required by manufacturer.

D. System shall be provided with two (2) sets of seven (7) Highland Tank Type III AFS filter cartridges, or two (2) PRM Filtration #2 high efficiency 3-micron oil absorbing bags with size 2 oil logs (one set to be spare provided to designated BART maintenance personnel), or two (2) sets of other filter elements as required for equal filtration system provided.

2.06 Not Used

Delete Articles 3.03 D 2, 3, 4, and 9 in their entirety and replace with:

2. Not Used

3. Not Used

4. Not Used

9. Not Used

END OF SECTION 22 14 29

SECTION 22 40 00

PLUMBING FIXTURES

The provisions of BART Facilities Standards, Standard Specifications, Release 3.1.2, dated April 2018, Section 22 40 00 – Plumbing Fixtures, shall apply to the Work, except as modified herein:

PART 1 - GENERAL

Delete Article 1.03 in its entirety and replace with:

1.03 MEASUREMENT AND PAYMENT

A. Measurement and payment for costs in connection with the Work specified herein will be considered to be included with the related item of Work as described in Section 01 20 00, Price and Payment Procedures, Article 1.04.

END OF SECTION 22 40 00

This page was intentionally left blank.

SECTION 23 05 93

TESTING, ADJUSTING AND BALANCING FOR HVAC

The provisions of BART Facilities Standards, Standard Specifications, Release 3.1.2, dated April 2018, Section 23 05 93 – Testing, Adjusting and Balancing for HVAC, shall apply to the Work, except as modified herein:

PART 1 - GENERAL

Delete Article 1.03 in its entirety and replace with:

1.03 MEASUREMENT AND PAYMENT

A. Measurement and payment for costs in connection with the Work specified herein will be considered to be included with the related item of Work as described in Section 01 20 00, Price and Payment Procedures, Article 1.04.

END OF SECTION 23 05 93

This page was intentionally left blank.

SECTION 23 09 00

INSTRUMENTATION AND CONTROL FOR HVAC

The provisions of BART Facilities Standards, Standard Specifications, Release 3.1.2, dated April 2018, Section 23 09 00 – Instrumentation and Control for HVAC, shall apply to the Work, except as modified herein:

PART 1 - GENERAL

Delete Article 1.03 in its entirety and replace with:

1.03 MEASUREMENT AND PAYMENT

A. Measurement and payment for costs in connection with the Work specified herein will be considered to be included with the related item of Work as described in Section 01 20 00, Price and Payment Procedures, Article 1.04.

END OF SECTION 23 09 00

This page was intentionally left blank.

SECTION 23 23 00

REFRIGERANT PIPING

The provisions of BART Facilities Standards, Standard Specifications, Release 3.1.2, dated April 2018, Section 23 23 00 – Refrigerant Piping, shall apply to the Work, except as modified herein:

PART 1 - GENERAL

Delete Article 1.03 in its entirety and replace with:

1.03 MEASUREMENT AND PAYMENT

A. Separate measurement or payment will not be made for work required under this Contract Specifications Section. All costs in connection with the work specified herein will be considered to be included with the related items of work in the Bid Schedule of the Bid Form or incidental to the Work.

END OF SECTION 23 23 00

This page was intentionally left blank.

SECTION 23 31 00

HVAC DUCTS AND CASINGS

The provisions of BART Facilities Standards, Standard Specifications, Release 3.1.2, dated April 2018, Section 23 31 00 – HVAC Ducts and casings, shall apply to the Work, except as modified herein:

PART 1 - GENERAL

Delete Article 1.03 in its entirety and replace with:

1.03 MEASUREMENT AND PAYMENT

A. Measurement and payment for costs in connection with the Work specified herein will be considered to be included with the related item of Work as described in Section 01 20 00, Price and Payment Procedures, Article 1.04.

END OF SECTION 23 31 00

This page was intentionally left blank.

SECTION 23 34 00

HVAC FANS

The provisions of BART Facilities Standards, Standard Specifications, Release 3.1.2, dated April 2018, Section 23 34 00 – HVAC Fans, shall apply to the Work, except as modified herein:

PART 1 - GENERAL

Delete Article 1.03 in its entirety and replace with:

1.03 MEASUREMENT AND PAYMENT

A. Measurement and payment for costs in connection with the Work specified herein will be considered to be included with the related item of Work as described in Section 01 20 00, Price and Payment Procedures, Article 1.04.

END OF SECTION 23 34 00

This page was intentionally left blank.

SECTION 23 81 00

UNITARY HVAC EQUIPMENT

The provisions of BART Facilities Standards, Standard Specifications, Release 3.1.2, dated April 2018, Section 23 81 00 – Unitary HVAC Equipment, shall apply to the Work, except as modified herein:

PART 1 - GENERAL

Delete Article 1.03 in its entirety and replace with:

1.03 MEASUREMENT AND PAYMENT

A. Measurement and payment for costs in connection with the Work specified herein will be considered to be included with the related item of Work as described in Section 01 20 00, Price and Payment Procedures, Article 1.04.

END OF SECTION 23 81 00

This page was intentionally left blank.

SECTION 26 05 17

DRY-TYPE TRANSFORMERS

The provisions of BART Facilities Standards, Standard Specifications, Release 3.1.2 dated April 2018, Section 26 05 17 – Dry-Type Transformers, shall apply to the Work, except as modified herein:

PART 1 - GENERAL

Delete Article 1.02 in its entirety and substitute therefor the following:

1.02 MEASUREMENT AND PAYMENT

A. Measurement and payment for costs in connection with the Work specified herein will be considered to be included with the related item of Work as described in Section 01 20 00, Price and Payment Procedures, Article 1.04C.

END OF SECTION 26 05 17

This Page Intentionally Left Blank

SECTION 26 05 24

LOW VOLTAGE WIRES AND CABLE

The provisions of BART Facilities Standards, Standard Specifications, Release 3.1.2, dated April 2018, Section 26 05 24 – Low Voltage Wires and Cable, shall apply to the Work, except as modified herein:

PART 1 - GENERAL

Delete Article 1.03 in its entirety and substitute therefor the following:

1.03 MEASUREMENT AND PAYMENT

A. Measurement and payment for costs in connection with the Work specified herein will be considered to be included with the related item of Work as described in Section 01 20 00, Price and Payment Procedures, Article 1.04C.

PART 2 - PRODUCTS

2.08 COLOR CODING OF CONDUCTORS (600V): Delete the specified requirements of Article 2.08A.5, and substitute therefor the following:

5. Power Cables: Color-coding of conductors for power cables shall be in accordance with NEMA WC 70, as follows:

Conductor	277/480 V	120/208 V
Phase A	Brown	Black
Phase B	Orange	Red
Phase C	Yellow	Blue
Neutral	Gray	White
Ground	Green	Green

END OF SECTION 26 05 24

This Page Intentionally Left Blank

SECTION 26 05 26

GROUNDING AND BONDING FOR ELECTRICAL SYSTEMS

The provisions of BART Facilities Standards, Standard Specifications, Release 3.1.2, dated April 2018, Section 26 05 26 – Grounding and Bonding for Electrical Systems, shall apply to the Work, except as modified herein:

PART 1 - GENERAL

Delete Article 1.03 in its entirety and substitute therefor the following:

1.03 MEASUREMENT AND PAYMENT

A. Measurement and payment for costs in connection with the Work specified herein will be considered to be included with the related item of Work as described in Section 01 20 00, Price and Payment Procedures, Article 1.04C.

END OF SECTION 26 05 26

This Page Intentionally Left Blank

SECTION 26 05 70

ELECTRICAL CABINETS AND ENCLOSURES

The provisions of BART Facilities Standards, Standard Specifications, Release 3.1.2 dated April 2018, Section 26 05 70 – Electrical Cabinets and Enclosures, shall apply to the Work, except as modified herein:

PART 1 - GENERAL

Delete Article 1.02 in its entirety and substitute therefor the following:

1.02 MEASUREMENT AND PAYMENT

A. Measurement and payment for costs in connection with the Work specified herein will be considered to be included with the related item of Work as described in Section 01 20 00, Price and Payment Procedures, Article 1.04C.

END OF SECTION 26 05 70

This Page Intentionally Left Blank

SECTION 26 24 22

MOTOR STARTERS AND CONTACTORS

The provisions of BART Facilities Standards, Standard Specifications, Release 3.1.2 dated April 2018, Section 26 24 22 – Motor Starters and Contactors, shall apply to the Work, except as modified herein:

PART 1 – GENERAL

Delete Article 1.03 in its entirety and substitute therefor the following:

1.03 MEASUREMENT AND PAYMENT

A. Measurement and payment for costs in connection with the Work specified herein will be considered to be included with the related item of Work as described in Section 01 20 00, Price and Payment Procedures, Article 1.04C.

END OF SECTION 26 24 22

This Page Intentionally Left Blank

SECTION 26 24 24

CIRCUIT BREAKERS AND PANELBOARDS

The provisions of BART Facilities Standards, Standard Specifications, Release 3.1.2 dated April 2018, Section 26 24 24 – Circuit Breakers and Panelboards, shall apply to the Work, except as modified herein:

PART 1 - GENERAL

Delete Article 1.02 in its entirety and substitute therefor the following:

1.02 NOT USED

Delete Article 1.03 in its entirety and substitute therefor the following:

1.03 MEASUREMENT AND PAYMENT

A. Measurement and payment for costs in connection with the Work specified herein will be considered to be included with the related item of Work as described in Section 01 20 00, Price and Payment Procedures, Article 1.04C.

END OF SECTION 26 24 24

This Page Intentionally Left Blank

SECTION 26 50 00

LIGHTING

The provisions of BART Facilities Standards, Standard Specifications, Release 3.1.2, dated April 2018, Section 26 50 00 – Lighting, shall apply to the Work, except as modified herein:

PART 1 - GENERAL

Delete Article 1.03 in its entirety and substitute therefor the following:

1.03 MEASUREMENT AND PAYMENT

A. Measurement and payment for costs in connection with the Work specified herein will be considered to be included with the related item of Work as described in Section 01 20 00, Price and Payment Procedures, Article 1.04C.

END OF SECTION 26 50 00

This Page Intentionally Left Blank

SECTION 27 13 01

COMMUNICATION CABLES AND RELATED EQUIPMENT

The provisions of BART Facilities Standards, Standard Specifications, Release 3.1.2 dated April 2018, Section 27 13 01 – Communications Cables and Related Equipment, shall apply to the Work, except as modified herein:

PART 1 - GENERAL

Delete Article 1.01 in its entirety and substitute therefor the following:

1.01 SECTION INCLUDES:

A. Single mode and multimode fiber optic cables.

B. Telephone cables.

C. Category 6 cables.

D. Related equipment including connectors, outlets, jumpers, patch cords, pigtails, interconnect panels, fiber and copper patch panels, splice cases, innerducts, terminal blocks and cable test equipment.

Delete Article 1.02 in its entirety and substitute therefor the following:

1.02 RELATED SECTIONS

A. Section 01 33 00, Submittal Procedures

B. Section 01 33 23, Shop Drawings, Product Data and Samples

C. Section 01 43 00, Quality Assurance

D. Section 01 45 00, Quality Control

E. Section 01 78 44, Spare Parts and Maintenance Materials

F. Section 20 50 13, Raceways for Facility Services

G. Section 20 70 13, Common Materials and Methods for Electronic Services

H. Section 20 70 19, Indoor Cabinets, Racks, Frames and Enclosures

I. Section 20 70 23, Electronic Circuits, Wires and Cables

J. Section 20 70 26, Common Materials and Methods for Electrical Services

K. Section 20 72 25, Factory and Field Testing

L. Section 20 80 00, Systems Integration Testing

M. Section 26 05 24, Low Voltage Wires and Cables

N. Section 26 05 26, Grounding and Bonding for Electrical Systems

O. Section 28 41 29, Closed Circuit Television System

Delete Article 1.03 in its entirety and substitute therefor the following:

1.03 MEASUREMENT AND PAYMENT

A. Measurement and payment for costs in connection with the Work specified herein will be considered to be included with the related item of Work as described in Section 01 20 00, Price and Payment Procedures, Article 1.04C.

END OF SECTION 27 13 01

SECTION 27 30 01

TELEPHONE SYSTEMS

The provisions of BART Facilities Standards, Standard Specifications, Release 3.1.2, dated April 2018, Section 27 30 01 – Telephone Systems, shall apply to the Work, except as modified herein:

PART 1 - GENERAL

1.02 MEASUREMENT AND PAYMENT: Delete Article 1.02 in its entirety and substitute therefor the following:

A. Measurement and payment for costs in connection with the Work specified herein will be considered to be included with the related item of Work as described in Section 01 20 00, Price and Payment Procedures, Article 1.04C.

1.03 DESCRIPTION: Delete Article 1.03 in its entirety and substitute therefor the following:

A. The existing BART Headend VOIP Telephone System, located at BART's Lake Merritt Administration (LMA) building, consists of several IP-based servers and two voice gateways that interface with existing analog switches, existing call recording equipment and the public switched telephone network (PTSN). The existing headend telephone system is managed through Cisco Unified Call Management (CUCM) software.

B. The new work shall interface with the existing telephone systems:

1. IP and Analog Telephony System

2. Emergency Telephone System

3. The requirements for Fire Telephone System; and Emergency Call Box System; do not apply to the Work.

PART 3 – EXECUTION

3.03 WORK TO BE PERFORMED BY THE DISTRICT

A. The District will make personnel available at the existing Train Control Room to support the termination of the telephone cables to the existing Telephone System.

END OF SECTION 27 30 01

This Page Intentionally Left Blank

SECTION 27 60 00

SUPERVISORY CONTROL AND DATA ACQUISITION (SCADA) SYSTEM

This Contract Specifications Section provides requirements regarding the Supervisory Control and Data Acquisition (SCADA) System.

PART 1 - GENERAL

1.01 SECTION INCLUDES

A. Existing SCADA System.

B. Modbus TCP Network Adapter.

C. Input/Output Modules.

D. Power Supplies.

1.02 MEASUREMENT AND PAYMENT

A. Measurement and payment for costs in connection with the Work specified herein will be considered to be included with the related item of Work as described in Section 01 20 00, Price and Payment Procedures, Article 1.04C.

1.03 REFERENCES

A. American National Standards Institute (ANSI):

1. ANSI C37.1 Definition, Specification and Analysis of Systems Used for Supervisory Control and Data Acquisition, and Automatic Control.

B. Electronic Industries Alliance (EIA):

1. EIA/ECA-310-E Cabinets, Racks, Panels, and Associated Equipment

2. EIA/TIA-568-C.1 Commercial Building Telecommunications Cabling Standard

C. Federal Aviation Administration (FAA):

1. HF-STD-001 Human Factors Design Standard (HFDS)

D. Institute of Electrical and Electronics Engineers, Inc. (IEEE):

1. IEEE 802.3 Ethernet

2. IEEE 730 Standard for Software Quality Assurance Plans

E. International Electrotechnical Commission (IEC):

1. IEC 61131 Programmable Logic Controllers

2. IEC 61158 Digital Data Communications for Measurement and Control-Field Bus for Use in Industrial Control Systems

F. Military Standards:

1. MIL-STD-1472 Human Engineering Design Criteria for Military Systems, Equipment, and Facilities

G. National Electrical Manufacturers Association (NEMA):

1. NEMA 12 General purpose enclosures for indoor use

2. NEMA 250 Enclosures for Electrical Equipment (1000 V Maximum)

H. Underwriters Laboratory (UL):

1. UL 508 Standard for Safety Industrial Control Equipment

1.04 SYSTEM DESCRIPTION

A. The existing SCADA System at the Station is based on an existing Allen-Bradley platform architecture utilizing an existing PLC-5 programmable logic controller and operating on DeviceNet protocol. This platform is obsolete and is being phased out by the District. Instead, new SCADA devices at the Station shall communicate with the District's existing Emerson platform architecture at the District's central headend location via Modbus TCP/IP communication protocol over the District's Unified Optical Network (UON).

B. Provide a Modbus TCP network adapter and associated input/output module hardware, power supplies, and cabling that shall interface with the existing Programmable Logic Controller (PLC) and related modules at the District's central headend location.

1. The Modbus TCP network adapter and devices shall be installed in enclosures labeled "Elevator Interface Cabinet" adjacent to the new elevator controllers in the Elevator Machine Room.

C. Interfaces with other Systems:

1. The relationship between SCADA and other systems shall be such that no action or failure of SCADA shall cause a failure of the system being monitored.

2. Escalator/Elevators Remote Monitoring System (EERMS): The SCADA system shall provide remote monitoring and control of the replacement elevator controller through the District's SCADA system.

a. SCADA shall relay elevators alarms, position, movement, and occupancy.

b. Refer to Contract Specifications Section 14 24 00, Hydraulic Elevators, Article 2.14 for Elevator Interface requirements.

c. Refer to Appendix 1 at the end of this Section for SCADA I/O points list for Elevator #3 and #30.

1.05 SUBMITTALS

A. Design Submittals: Submit the following design submittals:

1. SCADA I/O points list.
2. Network adapter and I/O module configuration diagrams
3. Complete list of equipment including interface details.
4. Product data and information for SCADA equipment.
5. Physical configuration of the SCADA network, including standard cabling configuration.
6. SCADA equipment manufacturer approval for Contractor proposed configuration.

B. Installation Submittals. Provide the following installation Submittals:

1. Installation Plans:
    a. Arrangement of equipment in cabinets/racks
    b. Cabinets/racks mounting details
    c. Inter-cabinet/rack cable plan
    d. Wiring tables - SCADA cabinets to field devices
2. Detail drawings showing final configuration, including location, type and termination of inter-cabinet cables.
3. Manufacturer's Instructions: Where installation procedures, or any part thereof, are required to be in accordance with the recommendations of the manufacturer of the equipment being installed, submit printed copies of these recommendations prior to installation.
4. SCADA Configuration:
    a. System configuration block diagrams and functional description
    b. Component location and connectivity
    c. I/O point address assignments
    d. Terminal block wiring connections for inputs and outputs

C. Operation and Maintenance Manuals. Provide the following Submittals:

1. Operations manuals: Submit operating instructions outlining the step-by-step procedures required for system operation including description of each subsystem in its operating mode. Instructions shall include the manufacturer's name, service manual, parts list, and a brief description of the equipment, components, and their basic operating features.

2. Maintenance manuals: Submit maintenance instructions listing regular maintenance procedures, possible system failures, a troubleshooting guide for repairs, and simplified diagrams for the system as installed.

D. Software Documentation Submittals. Provide the following Submittals:

1. Flow charts that depict the logic evaluated by the PLC

2. A tabulation of all inputs and outputs

3. Source code listing of all applications developed for BART-in electronic format

4. Software application code in electronic format suitable for future modification by BART personnel

E. List of recommended spare parts.

1.06 QUALITY ASSURANCE

A. Refer to IEEE STD 730 for software quality assurance requirements.

PART 2 - PRODUCTS

2.01 GENERAL REQUIREMENTS

A. SCADA shall utilize commercially available industrial-grade computer equipment and peripheral devices from the same manufacturer. Custom equipment shall be limited to special functions and interfaces.

B. Configuration data shall be stored in non-volatile memory.

C. SCADA equipment shall operate within swappable power supply ranges of 90 to 125V AC at 60Hz, and 24V DC.

D. SCADA equipment shall support continued operation in the electromagnetic environment where the equipment is installed.

E. Provide local control, initialization and troubleshooting with a local control panel or portable test equipment.

F. Provide remote initialization and troubleshooting via the data communications network.

G. SCADA shall be modular in design to provide expansion of performance and capacity by adding subsystem modules.

H. Include hardware and software tools and documentation for reconfiguration and expansion.

I. System Operation:

1. SCADA equipment shall normally function without operator intervention except for

routine service.

2. SCADA equipment shall perform orderly system start-up and shut-down as commanded by a system operator.

3. SCADA equipment shall prevent unattended action such as energizing output circuits upon power-up and power-restore.

4. SCADA outputs shall function as momentary contact closures with a time duration that is stable and adjustable.

5. Digital inputs to SCADA shall be from normally open and normally closed contacts. Contact ratings shall be as required for the operating circuit.

6. Input and output signals shall be electronically isolated from the SCADA equipment.

7. SCADA shall generate output via relays. Transient suppression circuits shall be appropriately specified for the operating conditions. Contact ratings shall be specified as required for the circuit. SCADA interface relays and relay contacts shall have an MTBF, at rated loads, of 5,000,000 cycles or more.

8. SCADA shall automatically detect equipment failures and provide corresponding failure indications and auto-changeover of failed non-vital components, including peripheral devices and data communications interface equipment while the system continues to operate.

9. Data communications between remote SCADA equipment and the existing SCADA Cabinet shall utilize approved industry standard protocols, which support error detection and message transmission.

10. Wiring: SCADA shall be designed and implemented so that wiring and cabling between the SCADA equipment and field devices are uniform in type, routing, and connection locations. The following interface requirements shall be met:

    a. I/O signals to/from SCADA at each facility shall terminate as Indicated on Contract Drawings.

    b. SCADA terminations shall include test points and rapid disconnect.

    c. All wires and cable shall be labeled using a logically consistent labeling convention.

11. SCADA equipment shall be protected from electromagnetic interference levels consistent with their locations. Bus bars of appropriate sizes shall be provided for grounding in all input/output termination cabinets.

J. Maintainability:

1. SCADA equipment shall be installed to allow easy maintenance access. All SCADA equipment shall be accessible without removing other equipment in the cabinet/rack.

2. Tools required for replacement of faulty equipment shall permit easy assembly/disassembly.

3. Removable terminal blocks shall be used.

K. Identification:

1. Provide module faceplates with color-coded, slip-in labels.

2. The outside label shall feature both color-coding for module specification and labeling space for I/O point identification. The inside label shall feature a detailed wiring or network diagram complete with the module catalog number and description.

3. All major assemblies and sub-assemblies, circuit boards, and devices shall be identified using permanent labels or markings, each of which shall indicate the manufacturer's catalog number and a product manufacturing date code.

L. Power: SCADA equipment shall be provided with power supplies.

2.02 NETWORK ADAPTER

A. Provide network communications adapter that communicates on Modbus TCP. The network adapter shall serve as the head module for the communication bus to which active input and output modules can be connected.

B. The network adapter shall feature the following:

1. Fieldbus protocol: Modbus TCP

2. Two Ethernet ports and an integrated switch

3. DIN-rail mounted horizontally

4. Input Voltage: 20.4 VDC to 28.8 VDC, nominally 24 VDC

5. Output Voltage: 20.4 VDC to 28.8 VDC, nominally 24 VDC

C. The network adapter shall be capable of being accessed with system-independent web service application via the USB service interface or the Ethernet port.

D. The network adapter shall be Emerson RTSi-EP Slice I/O EPXMBE001, or equal, for compatibility purposes with the existing SCADA System.

2.03 INPUT/OUTPUT MODULES

A. The SCADA system shall be provided with an input module to receive signals provided by equipment being monitored and remotely control the equipment using output modules and relays.

B. The input module and output modules (I/O modules) shall operate on the same communications bus as the network adapter.

C. The I/O modules shall have a built-in power supply operating at 24 VDC input and 24 VDC output.

D. I/O modules shall be sized and configured to accommodate the number of input and

output points as indicated in Appendix 1 of this Section necessary for the EERMS and remote monitoring and control from the Station Agent Booth Control Panel. The basis of design assumes 16-point input modules and 16-point output modules.

E. The input modules shall be Emerson RTSi-EP EP-125F, or equal, for compatibility purposes with the existing SCADA system.

F. The output module shall be Emerson RTSi-EP EP-225F, or equal, for compatibility purposes with the existing SCADA system.

2.04 POWER SUPPLIES

A. The network adapter and I/O modules shall be provided with compatible DIN-rail mounted power supply.

B. The power supply shall operate on 120 VAC input and 24 VDC nominal output.

C. The power supply shall be Emerson RTSi-EP EP-700F, or equal, for compatibility purposes with the existing SCADA system.

PART 3 - EXECUTION

3.01 FIELD TESTING

A. Conduct field testing in three phases:

1. Phase 1 - Installation Verification: Verify correct termination of all field wiring and inter-facility cabling using Contractor-prepared interconnection diagrams.

2. Phase 2 - Functional/Performance Testing: Functional/Performance Testing shall include:

   a. End-to-end testing of SCADA I/O points. The final approved I/O point list provided by the Contractor shall be used as the basis for functional testing at each location.

   b. Wherever possible, field devices shall be actuated by Contractor personnel to verify that the device status is correctly displayed on the appropriate local panels. Field devices that cannot be actuated may be simulated by shorting the device signal wires.

   c. Commands from the existing SCADA Cabinet shall be issued to verify that the commands are correctly transmitted to the local and remote SCADA equipment.

3. Phase 3 – End-to-End Testing:

   a. After the remote SCADA equipment has been installed, commands and indications shall be tested from the existing remote headend SCADA Cabinet to verify the integrity of the communication links in the final configuration and to verify proper integration between the different systems.

3.02 TRAINING

A. Maintenance Training shall include the following:

1. Instruction and "hands-on" demonstration of the operation of all system components and the entire system including program changes and functions

2. Operation of internal processor diagnostic and self-test routines

3. Equipment settings and test procedures

4. Equipment replacement

5. Familiarization with display icons, alarm recognition, including awareness of alarm significance and criticality of subsequent action(s)

6. Remote systems controls

B. Operations Training shall include the following:

1. Familiarization with display icons, alarm recognition, including awareness of alarm significance and criticality of subsequent action(s)

2. Remote systems controls

3.03 WORK TO BE PERFORMED BY DISTRICT

A. The District will make personnel available at the Project Station as required to support testing from these locations.

B. The District will provide final programming of the additional I/O points as provided.

C. The District will assign IP addresses for connection the District’s local area network in the Station.

END OF SECTION 27 60 00

APPENDIX 1

SCADA SYSTEM INPUT/OUTPUT POINTS LIST

STATION/TRAIN CONTROL ROOM (Location A30)						
Elevator #3 Input Module 01						
#	Location	Terminal Cabinet	Point Description	Point Type	Activated State	Associated Panel
0	A30	Note 1	A30 elevator #3 top call	DI	Indication	SAB
1	A30	Note 1	A30 elevator #3 bottom call	DI	Indication	SAB
2	A30	Note 1	A30 elevator #3 at top position	DI	Indication	SAB
3	A30	Note 1	A30 elevator #3 at bottom position	DI	Indication	SAB
4	A30	Note 1	A30 elevator #3 moving up	DI	Indication	SAB
5	A30	Note 1	A30 elevator #3 moving down	DI	Indication	SAB
6	A30	Note 1	A30 elevator #3 car occupied	DI	Indication	SAB
7	A30	Note 1	A30 elevator #3 car alarm	DIA	Indication	SAB
8	A30	Note 1	A30 elevator #3 shutdown	DIA	Alarm	SAB
9	A30	Note 1	A30 elevator #3 door lock activated	DI	Indication	SAB
10	A30	Note 1	A30 elevator #3 loss of power	DIA	Alarm	SAB
11	A30	Note 1	A30 elevator #3 safety circuit activated	DIA	Alarm	SAB
12	A30	Note 1	A30 elevator #3 emergency stop push button	DI	Alarm	SAB
13	A30	Note 1	A30 elevator #3 door emergency service	DIA	Alarm	SAB
14	A30	Note 1	A30 elevator #3 service mode	DI	Alarm	SAB
15	A30	Note 1	A30 elevator #3 mechanic on site	DI	Indication	SAB

STATION/TRAIN CONTROL ROOM (Location A30)						
Elevator #3 Input Module 02						
#	Location	Terminal Cabinet	Point Description	Point Type	Activated State	Associated Panel
0	A30	Note 1	A30 elevator #3 resevoir oil low	DI	Alarm	SAB
1	A30	Note 1	A30 elevator #3 collection oil level high	DI	Alarm	SAB
2	A30	Note 1	A30 elevator #3 phone off hook	DI	Alarm	SAB
3	A30	Note 1	A30 elevator #3 elevator control fuse	DI	Alarm	SAB
4	A30	Note 1	SPARE			
5	A30	Note 1	SPARE			
6	A30	Note 1	SPARE			
7	A30	Note 1	SPARE			
8	A30	Note 1	SPARE			
9	A30	Note 1	SPARE			
10	A30	Note 1	SPARE			
11	A30	Note 1	SPARE			
12	A30	Note 1	SPARE			
13	A30	Note 1	SPARE			
14	A30	Note 1	SPARE			
15	A30	Note 1	SPARE			

STATION/TRAIN CONTROL ROOM (Location A30)						
Elevator #3 Output Module 01						
#	Location	Terminal Cabinet	Point Description	Point Type	Activated State	Associated Panel
0	A30	Note 1	A30 elevator #3 top call	DO	Indication	SAB
1	A30	Note 1	A30 elevator #3 bottom call	DO	Indication	SAB
2	A30	Note 1	A30 elevator #3 shutdown by Agent	DO	Indication	SAB
3	A30	Note 1	SPARE			
4	A30	Note 1	SPARE			
5	A30	Note 1	SPARE			
6	A30	Note 1	SPARE			
7	A30	Note 1	SPARE			
8	A30	Note 1	SPARE			
9	A30	Note 1	SPARE			
10	A30	Note 1	SPARE			
11	A30	Note 1	SPARE			
12	A30	Note 1	SPARE			
13	A30	Note 1	SPARE			
14	A30	Note 1	SPARE			
15	A30	Note 1	SPARE			

Notes:
1. Input and Output Modules located in Elevator #3 SCADA Interface Cabinet in Elevator Machine Room 101.

STATION/TRAIN CONTROL ROOM (Location A30)						
Elevator #30 Input Module 01						
#	Location	Terminal Cabinet	Point Description	Point Type	Activated State	Associated Panel
0	A30	Note 1	A30 elevator #30 top call	DI	Indication	SAB
1	A30	Note 1	A30 elevator #30 bottom call	DI	Indication	SAB
2	A30	Note 1	A30 elevator #30 at top position	DI	Indication	SAB
3	A30	Note 1	A30 elevator #30 at bottom position	DI	Indication	SAB
4	A30	Note 1	A30 elevator #30 moving up	DI	Indication	SAB
5	A30	Note 1	A30 elevator #30 moving down	DI	Indication	SAB
6	A30	Note 1	A30 elevator #30 car occupied	DI	Indication	SAB
7	A30	Note 1	A30 elevator #30 car alarm	DIA	Indication	SAB
8	A30	Note 1	A30 elevator #30 shutdown	DIA	Alarm	SAB
9	A30	Note 1	A30 elevator #30 door lock activated	DI	Indication	SAB
10	A30	Note 1	A30 elevator #30 loss of power	DIA	Alarm	SAB
11	A30	Note 1	A30 elevator #30 safety circuit activated	DIA	Alarm	SAB
12	A30	Note 1	A30 elevator #30 emergency stop push button	DI	Alarm	SAB
13	A30	Note 1	A30 elevator #30 door emergency service	DIA	Alarm	SAB
14	A30	Note 1	A30 elevator #30 service mode	DI	Alarm	SAB
15	A30	Note 1	A30 elevator #30 mechanic on site	DI	Indication	SAB

STATION/TRAIN CONTROL ROOM (Location A30)						
Elevator #30 Input Module 02						
#	Location	Terminal Cabinet	Point Description	Point Type	Activated State	Associated Panel
0	A30	Note 1	A30 elevator #30 resevoir oil low	DI	Alarm	SAB
1	A30	Note 1	A30 elevator #30 collection oil level high	DI	Alarm	SAB
2	A30	Note 1	A30 elevator #30 phone off hook	DI	Alarm	SAB
3	A30	Note 1	A30 elevator #30 elevator control fuse	DI	Alarm	SAB
4	A30	Note 1	SPARE			
5	A30	Note 1	SPARE			
6	A30	Note 1	SPARE			
7	A30	Note 1	SPARE			
8	A30	Note 1	SPARE			
9	A30	Note 1	SPARE			
10	A30	Note 1	SPARE			
11	A30	Note 1	SPARE			
12	A30	Note 1	SPARE			
13	A30	Note 1	SPARE			
14	A30	Note 1	SPARE			
15	A30	Note 1	SPARE			

STATION/TRAIN CONTROL ROOM (Location A30)						
Elevator #30 Output Module 01						
#	Location	Terminal Cabinet	Point Description	Point Type	Activated State	Associated Panel
0	A30	Note 1	A30 elevator #30 top call	DO	Indication	SAB
1	A30	Note 1	A30 elevator #30 bottom call	DO	Indication	SAB
2	A30	Note 1	A30 elevator #30 shutdown by Agent	DO	Indication	SAB
3	A30	Note 1	SPARE			
4	A30	Note 1	SPARE			
5	A30	Note 1	SPARE			
6	A30	Note 1	SPARE			
7	A30	Note 1	SPARE			
8	A30	Note 1	SPARE			
9	A30	Note 1	SPARE			
10	A30	Note 1	SPARE			
11	A30	Note 1	SPARE			
12	A30	Note 1	SPARE			
13	A30	Note 1	SPARE			
14	A30	Note 1	SPARE			
15	A30	Note 1	SPARE			

Notes:
1. Input and Output Modules located in Elevator #30 SCADA Interface Cabinet in Elevator Machine Room 101.

SECTION 28 31 00

FIRE DETECTION AND ALARM SYSTEM

The provisions of BART Facilities Standards, Standard Specifications, Release 3.1.2, dated April 2018, Section 28 31 00 – Fire Detection and Alarm System, shall apply to the Work, except as modified herein:

PART 1 - GENERAL

1.01 SECTION INCLUDES: Delete the requirements of Article 1.01 in its entirety and substitute therefor the following:

A. Existing Fire Alarm System Description

B. Fire Alarm equipment

C. Fire Alarm peripheral devices

Delete Article 1.03 in its entirety and substitute therefor the following:

1.03 MEASUREMENT AND PAYMENT

A. Measurement and payment for costs in connection with the Work specified herein will be considered to be included with the related item of Work as described in Section 01 20 00, Price and Payment Procedures, Article 1.04C.

PART 2 - PRODUCTS

2.01 FIRE ALARM SYSTEM: Delete the requirements of Article 2.01A and substitute therefor the following:

A. The existing fire alarm system at the Oakland Coliseum Station is a Siemens brand fire alarm system, model Desigo series modular fire alarm control unit, with associated intelligent addressable fire alarm components, devices, and appliances. Any modification to the existing fire alarm system wiring and devices shall conform to the following requirements:

1. Performance and capacities of signaling line circuits shall be in accordance with NFPA 72, Class A; Door holder circuit in accordance with NFPA 72, Class D, printer circuit in accordance with NFPA 72, Class E, initiating device circuits in accordance with NFPA 72, Class A; and occupant notification appliances in accordance with NFPA 72, Class A.

2. New devices and peripherals shall be fully compatible with the existing Siemens Desigo system. Functional and performance criteria for new devices are as described herein.

3. Provide wiring, connections to devices, outlet boxes, junction boxes, and all other material and accessories as necessary for a complete operating system.

2.02 FIRE ALARM EQUIPMENT: Add the following requirements to the end of Article 2.02D:

3. Addressable input modules shall be compatible with the existing Siemens Desigo fire alarm system, Siemens Desigo XTRI-S or equal.

2.03 FIRE ALARM PERIPHERAL DEVICES:

Add the following requirements to the end of Article 2.03B:

4. Intelligent photoelectric smoke detectors shall be compatible with the existing Siemens Desigo fire alarm system, Siemens FDO421 or equal, with compatible detector base, Siemens DB-11 or equal.

5. Intelligent heat detectors shall be compatible with the existing Siemens Desigo fire alarm system, Siemens FDT421 or equal, with compatible detector base, Siemens DB-11 or equal.

Add the following requirements to the end of Article 2.03C:

4. Provide intelligent input and output (I/O) interface module for control of elevator primary and alternate recall, and fireman's visual hat indicator. Relay contact ratings shall be 5 A at 120 VAC. The intelligent I/O interface module shall be compatible with the existing Siemens Desigo fire alarm system, Siemens FDCIO422 or equal.

5. Provide interposing relays rated 24/120V AC to electrically isolate fire alarm relay modules from the controlled equipment. Interposing relay contact ratings shall be 10 A at 120 VAC, PAM-1 or equal.

PART 3 - EXECUTION

3.03 TRAINING SESSIONS: Delete Article 3.03 in its entirety.

END OF SECTION 28 31 00

SECTION 28 41 29

CLOSED CIRCUIT TELEVISION SYSTEM

The provisions of BART Facilities Standards, Standard Specifications, Release 3.1.2, dated April 2018, Section 28 41 29 – Closed Circuit Television System, shall apply to the Work, except as modified herein:

PART 1 - GENERAL

Delete Article 1.01 in its entirety and substitute therefor the following:

1.01 SECTION INCLUDES

A. Functional requirements.

B. Equipment (existing).

Delete Article 1.03 in its entirety and substitute therefor the following:

1.03 MEASUREMENT AND PAYMENT

A. Measurement and payment for costs in connection with the Work specified herein will be considered to be included with the related item of Work as described in Section 01 20 00, Price and Payment Procedures, Article 1.04C.

Delete Article 1.07 in its entirety and substitute therefor the following:

1.07 SYSTEM DESCRIPTION: Delete Article 1.07 in its entirety and substitute therefor the following:

A. The CCTV system in the passenger station is existing to remain, and provides video surveillance of areas in the station.

B. Where existing CCTV video surveillance cameras are to be modified, relocated, or reconnected as indicated on Contract Drawings, the performance and functional requirements of existing cameras shall conform to the requirements herein as part of the work.

C. Provide all interfaces with other systems in the station and in the BART operating network system, as specified and indicated, to provide a completely integrated operating system.

PART 3 - EXECUTION

Add the following requirements:

3.03 WORK TO BE PERFORMED BY THE DISTRICT

A. The District will perform any programming or reconfiguration of the existing Video Management System (VMS) where existing surveillance cameras are to be reconnected

to the existing VMS.

END OF SECTION 28 41 29

CONTRACT DRAWINGS

(separately bound)

TECHNICAL QUALIFICATION BID FORM

TECHNICAL QUALIFICATION BID CHECKLIST

The following documents shall be submitted as part of Bidder's Technical Qualification Bid. Bidder shall check off the documents included in its Technical Qualification Bid and submit this Technical Qualification Bid Checklist with its Technical Qualification Bid.

1. Statement of Qualifications and Business References (Refer to Paragraph 10.A.1 of Instructions to Bidders). _____
2. Minimum Technical Requirements submittal (Refer to Paragraph 10.A.1.1 of Instructions to Bidders). _____
3. Bidder's Security. (Refer to Paragraph 10.A.2 of Instructions to Bidders). _____
4. Power of Attorney (Refer to Paragraph 10.A.3 of Instructions to Bidders). _____
5. Certification Regarding Financial Contributions (Refer to Paragraph 10.A.5 of Instructions to Bidders). _____
6. Joint Venture Agreement, **if required**. (Refer to Paragraph 10.A.6 of Instructions to Bidders). _____
7. Fair Employment Practices Certification (Refer to Paragraph 10.A.7 of Instructions to Bidders). _____
8. Drug and Alcohol Prevention/Testing Program (Refer to Paragraph 10.A.8 of Instructions to Bidders). _____
9. Certification Regarding Lobbying _____
10. Certification Regarding Debarment, Suspension, Ineligibility and Voluntary Exclusion – Lower Tier Covered Transactions _____
11. Buy America Certificate _____
12. USDOT Bidder's List Form _____
13. Certification Regarding Federal Tax Liability and Recent Felony Convictions _____
14. Certification of Status as Certified Qualified Conveyance Company _____

Name of Bidder:_____

Signature of Bidder:_____ Date:_____

Print Name and Title: _____

(If the Bidder is a partnership or a joint venture, then in addition to the Statement of Qualifications and Business References submitted by the partnership or joint venture, each general partner/joint venturer shall prepare and submit a separate Statement of Qualifications and Business References for Construction. Attach additional sheet if necessary.)

CONFIDENTIAL

STATEMENT OF QUALIFICATIONS
AND BUSINESS REFERENCES
FOR CONSTRUCTION

NAME OF BIDDER _____

PRINCIPAL OFFICE _____
(Street or P.O. Box) (City) (State) (Zip Code)

EMAIL _____

1. Are you: an individual ☐ a partnership ☐ a corporation ☐ a joint venture? ☐
(Check as applicable)

   If the Bidder is a partnership, list names and addresses of partners; if a corporation, list names of officers and directors and State of incorporation; if a joint venture, list names and addresses of venturers and if any venturer is a corporation, partnership or joint venture, list the same information for each such corporation, partnership and joint venture**. Bidders submitting a Bid as a joint venture must have an executed joint venture agreement as of the Bid date and a copy of the joint venture agreement shall be attached in accordance with the requirements of the Instructions to Bidders.**

   _____

   _____

   _____

   If a joint venture Bidder fails to attach a copy of the executed joint venture agreement to this Statement of Qualifications and Business References in accordance with the requirements of the Instructions to Bidders, such failure to attach a copy of the Agreement may render the Bid non-responsive.

2. Are you licensed as a contractor to do business in California? _____

   License No. & Classification _____ Expiration Date _____

   If the Bidder is a partnership or a joint venture, then each general partner/joint venturer shall prepare and submit a separate Statement of Qualifications and Business References for Construction. Attach additional sheets if necessary.

3. What is your present business name? [1(1)] _____

4. How many years has your organization been in business as a contractor under your present business name? _____

5. How many years of experience has your organization had in construction work similar to the work you are interested in Bidding?
   (a) As a Prime Contractor? _____
   (b) As a Subcontractor? _____

(1) If the Bidder is a joint venture, the name of the business indicated here shall match the name of the joint venture as provided in the joint venture agreement.

6. List similar types of projects your firm has successfully concluded in the last five year and/or has underway. Include contact names of individuals, emails, and telephone numbers as the District may contact these individuals as references.

	Contract Start and End Date / Duration	Contract Value	Entity Name and Address	Project Description	Contact Person, Position, Email, and Phone
1.					
2.					
3.					

7. Have you or your organization or any officer or partner thereof, failed to complete a contract? _____
If so, give details_____

_____

8. Give information below about the construction experience of the principal individuals of your present organization.

Individual's Name	Present Position or Office in Your Organization	Years of Construction Experience	Magnitude and Type of Work	In What Capacity

9. References: Give only engineers, architects, or owners, including public bodies, for whom you have done work:

Name	Address	Business

10. Reference is hereby made to the following bank or banks as to your financial responsibility: (If the Bidder is a joint venture or partnership, each joint venture/general partner shall also provide the same information).

Name of Bank:_____
Address: Street _____
City and State _____ Telephone _____

Officer Familiar with Bidder's Account: _____

Name of Bank: _____

Address: Street _____

City and State _____ Telephone _____

Officer Familiar with Bidder's Account: _____

11. Is any litigation pending against your organization? _____

If so, give details _____

_____

_____

_____

12. Does your firm have any identified, perceived or potential conflicts of interest? If so, Bidder shall check the second box below and complete the Contractor Conflict-of-Interest Declaration referenced below. If not, Bidder shall check the first box below. Prior to completing this question, Bidder shall review District Contractor Conflict of Interest and the District Contractor Code of Conduct available online at: https://www.bart.gov/about/business/procurement.

The Bidder hereby declares that (check one):

☐ The *District Contractor Code of Conduct* and have been reviewed and statements above have been read, and the undersigned Bidder has determined that **no conflicts-of-interest exist,** in fact or appearance for the Bidder or its subcontractors at this time.

☐ The *District Contractor Code of Conduct* has been reviewed and an identified, perceived, or potential conflict-of-interest **does exist** (note that a potential conflict-of-interest does not necessarily disqualify Bidder from this Solicitation). If Bidder checks this box, it will be required to complete an additional District Contractor Conflict of Interest Declaration form (see https://www.bart.gov/about/business/procurement) within five (5) days after the Bid due date. Declaration shall be submitted to: conflictofinterest@bart.gov. Failure to timely submit the declaration may deem the Bid Non-Responsive.

13. Has your organization been debarred or suspended by any public jurisdiction? If so, provide details as an attachment to this Exhibit.

I declare under penalty of perjury, under the laws of the State of California, that the foregoing is true and correct, is within my personal knowledge and if called upon to testify, I could testify competently thereto.

Executed on _____.

(2) _____
Name of Bidder

(2) _____
Signature of Bidder

_____
Print Name and Title of the Person Signing

(2) If the Bidder is a joint venture, the name and signature shall match the name and signature as provided in the joint venture agreement and shall conform with the requirements in the Instructions to Bidders.

BIDDER'S BOND

We _____ as PRINCIPAL, and _____
as SURETY, are held and firmly bound unto the San Francisco Bay Area Rapid Transit District, hereinafter called the District, in the penal sum of **TEN PERCENT OF THE TOTAL BID PRICE** of the Principal above named, submitted by said Principal to the District, for the work described below, for the payment of which sum in lawful money of the United States, well and truly to be made, we bind ourselves, our heirs, executors, administrators and successors, jointly and severally, firmly by these presents.

The condition of this obligation is such that whereas the Principal has submitted the above-mentioned Bid to the District, for certain construction specifically described as follows, for which Bids are to be opened for **15NL-140– COLISEUM STATION ELEVATOR MODERNIZATION.**

_____

_____

Now therefore, if the aforesaid principal is awarded the Contract, and, within the time and manner required under the Contract Specifications, after the prescribed forms are presented for signature, enters into a written Contract, in the prescribed form, in accordance with the Bid, and files the two bonds with the District, one to guarantee faithful performance and the other to guarantee payment for labor and materials, then this obligation shall be null and void; otherwise, it shall be and remain in full force and effect.

In the event suit is brought upon this bond by the District and judgment is recovered, the surety shall pay all costs incurred by the District in such suit, including a reasonable attorney's fee to be fixed by the court.

IN WITNESS WHEREOF, we have hereunto set our hands and seals on this _____day of _____, 20___

Principal

_____ (SEAL)

Surety

_____ (SEAL)

(Note: Signatures of those executing for the surety must be notarized.)

BIDDER'S BOND

We _____ as PRINCIPAL, and the undersigned corporations as Sureties, are held and firmly bound unto the San Francisco Bay Area Rapid Transit District, hereinafter called the District, in the penal sum of **TEN PERCENT OF THE TOTAL BID PRICE** of the Principal above named, submitted by said Principal to the District, for the work described below, for the payment of which sum in lawful money of the United States, well and truly to be made, we bind ourselves, our heirs, executors, administrators and successors, jointly and severally, firmly by these presents, provided that we, the Sureties, bind ourselves in such sum jointly and severally as well as severally only for the purpose of allowing a joint action or actions against any or all of us, and for all other purposes each Surety binds itself jointly and severally with the Principal for the payment of such sum only as appears opposite its name in the schedule hereinafter set forth.

The condition of this obligation is such that whereas the Principal has submitted the above-mentioned Bid to the District, for certain construction specifically described as follows, for which Bids are to be opened for **Contract No. 15NL-140 – COLISEUM STATION ELEVATOR MODERNIZATION.**

_____

_____

Now therefore, if the aforesaid principal is awarded the Contract, and, within the time and manner required under the Contract Specifications, after the prescribed forms are presented for signature, enters into a written Contract, in the prescribed form, in accordance with the Bid, and files the two bonds with the District, one to guarantee faithful performance and the other to guarantee payment for labor and materials, then this obligation shall be null and void; otherwise, it shall be and remain in full force and effect.

In the event suit is brought upon this bond by the District and judgment is recovered, the sureties shall pay all cost incurred by the District in such suit, including a reasonable attorney's fee to be fixed by the court.

The schedule of sums for the payment of which each surety is jointly and severally bound with the Principal as hereinabove set forth, is as follows:

Surety	Name and State of Incorporation	Limit of Liability

IN WITNESS WHEREOF, we have hereunto set our hands and seals on this _____day of _____ 20___

_____ (SEAL)
Principal

_____

By _____ (SEAL)
Surety

By _____ (SEAL)
Surety

_____

By _____ (SEAL)
Surety

By _____ (SEAL)
Surety

_____

By _____ (SEAL)
Surety

By _____ (SEAL)
Surety

(Note: Signatures of those executing for the surety must be notarized.)

POWER OF ATTORNEY

The Undersigned (1) _____,

a/the (2) _____, of (3) _____, a

(4) _____, does hereby appoint

(5) _____, on behalf of (3) _____

as its attorney in fact to act in its place for the purposes of executing a Bid for and executing and entering into Contract No. 15NL-140 with the San Francisco Bay Area Rapid Transit District, and to represent and bind (3) _____ _____ (and its general partners and joint venture members, if any) in all matters in connection with such Bid and Contract.

(3) _____ further grants to its attorney in fact full authority to act in any manner both proper and necessary to the exercise of the foregoing powers, and ratifies every act that he or she may lawfully perform in exercising those powers.

Executed on this _____ day of _____, 20___, at (6) _____

(3) _____

By: _____
Title:

_____

Note: If the principal is a joint venture, all joint venturers must sign this power of attorney.

_____

(1) Insert name of individual granting power of attorney.
(2) Insert title (e.g. Vice President).
(3) Insert name of principal (e.g. Ace Builders)
(4) Insert type of entity and state or organization (e.g. Nevada sole proprietorship).
(5) Insert name of attorney in fact.
(6) Insert city and state.

SAN FRANCISCO BAY AREA RAPID TRANSIT DISTRICT

CERTIFICATION REGARDING FINANCIAL CONTRIBUTIONS

(Submit with Technical Qualification Bid)

Certification to be executed by Bidder and each proposed first-tier Subcontractor or subsupplier whose Subcontract exceeds $100,000. Make additional copies of the Certification as necessary.

Bidder must use its best efforts to collect the Certification from each first-tier Subcontractor or subsupplier whose Subcontract exceeds $100,000 and to submit such Certifications along with its own to the District on the Bid date.

Bidder is advised that all Certifications must be submitted on the Bid date unless there is reasonable cause for delay; however, Bidder is cautioned that unless all Certifications are submitted within five (5) Days after the date Bids are due, the Bid may be considered non-responsive. See Instructions to Bidders for submitting Certifications after the Bid due date.

The undersigned certifies that:

1. It will not make any monetary or in-kind contribution (including loans) to any BART Director, or any candidate for Director, in excess of $1,000 from the date Bids are opened by the District until Award of the Contract.

2. It understands that the term "contribution" shall have the same meaning as defined in California Government Code Section 82015 and implementing regulations adopted by the Fair Political Practices Commission.

3. If Bidder is awarded the Contract, the undersigned shall continue to comply with this prohibition for three (3) months following Award of the Contract.

_____
Name of Firm

_____
Signature Date

_____
Print Name and Title

(Attention is directed to General Conditions Article GC7.1.2, Fair Employment Practices.)

FAIR EMPLOYMENT PRACTICES CERTIFICATION

TO THE SAN FRANCISCO BAY AREA RAPID TRANSIT DISTRICT

The undersigned in submitting a Bid for performing the following work by Contract, hereby certifies that it has or will meet the standards of affirmative compliance with the Fair Employment Practices Requirements of the Contract.

CONTRACT NO. 15NL-140

COLISEUM STATION ELEVATOR MODERNIZATION

_____
Name of Bidder

By: _____
Signature of Representative

_____
Print Name and Title of Representative

_____
Business Address

(Bidder's attention is directed to Article SC7.3.1 of the Supplementary Conditions. Certificate shall be executed by the Bidder and submitted with the Bid or within the time frame specified in the Instructions to Bidders. Failure to do so may make the Bid non-responsive.)

DRUG AND ALCOHOL PREVENTION/TESTING PROGRAM CERTIFICATE

The Bidder hereby certifies that it has and will maintain a drug and alcohol program that meets the standards and complies with the requirements of the U.S. Department of Transportation's regulations concerning transportation workplace drug and alcohol prevention/testing programs as set forth in 49 CFR Parts 40, and 655, as they may be amended from time to time.

_____

Name of Firm

_____

Signature Date

_____

Print Name and Title

(Bidder's attention is directed to Paragraph 6.I of the Instructions to Bidders and Supplementary Conditions Article SC10.25 of the Contract, Certification Regarding Lobbying. The Certification shall be executed by the Bidder and by applicable Subcontractors or sub-suppliers of any tier receiving an amount in excess of $100,000 and submitted by the Bidder either with the Bid or within the time frame specified in the Instructions to Bidders or before commencement of Subcontract work, as specified in the Instructions to Bidders.)

CERTIFICATION REGARDING LOBBYING

The undersigned certifies, to the best of his or her knowledge and belief, that:

(1) No Federal appropriated funds have been paid or will be paid, by or on behalf of the undersigned, to any person for influencing or attempting to influence an officer or employee of a Federal agency, a Member of Congress, an officer or employee of Congress, or an employee of a Member of Congress in connection with the awarding of any Federal contract, the making of any Federal grant, the making of any Federal loan, the entering into of any cooperative agreement, and the extension, continuation, renewal, amendment or modification of any Federal contract, grant, loan or cooperative agreement.

(2) If any funds other than Federal appropriated funds have been paid or will be paid to any person for influencing or attempting to influence an officer or employee of any Federal agency, a Member of Congress, an officer or employee of Congress, or an employee of a Member of Congress in connection with this Federal grant, loan, or cooperative agreement, the undersigned shall complete and submit Standard Form - LLL, "Disclosure Form to Report Lobbying," in accordance with its instructions.

(3) The undersigned shall require that the language of this certification be included in the Award documents for all sub-awards at all tiers (including Subcontracts, subgrants, and contracts under grants, loans and cooperative agreements) and that all subrecipients shall certify and disclose accordingly.

This certification is a material representation of fact upon which reliance is placed when this transaction was made or entered into. Submission of this certification is a prerequisite for making or entering into this transaction imposed by Section 1352, Title 31, U.S. Code. Any person who fails to file the required certification shall be subject to a civil penalty of not less than $10,000 and not more than $100,000 for each such failure.

_____
Name of Bidder

By: _____
Signature of Representative

_____
Name of Representative

Title: _____

CERTIFICATION REGARDING DEBARMENT, SUSPENSION, INELIGIBILITY AND VOLUNTARY EXCLUSION - LOWER TIER COVERED TRANSACTIONS

Instructions for Certification

1. By signing and submitting this proposal, the prospective lower tier participant is providing the certification set out below.

2. The certification in this clause is a material representation of fact upon which reliance was placed when this transaction was entered into. If it is later determined that the prospective lower tier participant knowingly rendered an erroneous certification, in addition to other remedies available to the Federal Government, the department or agency with which this transaction originated may pursue available remedies, including suspension and/or debarment.

3. The prospective lower tier participant shall provide immediate written notice to the person to which this proposal is submitted if at any time the prospective lower tier participant learns that its certification was erroneous when submitted or has become erroneous by reason of changed circumstances.

4. The terms "covered transaction," "debarred," "suspended," "ineligible," "lower tier covered transaction," "participant," "person," "primary covered transaction," "principal," "proposal," and "voluntarily excluded," as used in this clause, have the meanings set out in the Definitions and Coverage sections of rules implementing Executive Order 12549. You may contact BART Procurement Department, email chogan@bart.gov , for assistance in obtaining a copy of those regulations.

5. The prospective lower tier participant agrees by submitting this proposal that, should the proposed covered transaction be entered into, it shall not knowingly enter into any lower tier covered transaction with a person who is disbarred, suspended, declared ineligible, or voluntarily excluded from participation in this covered transaction, unless authorized by the department or agency with which this transaction originated.

6. The prospective lower tier participant further agrees by submitting this proposal that it will include this clause titled "Certification Regarding Debarment, Suspension, Ineligibility and Voluntary Exclusion - Lower Tier Covered Transactions," without modification, in all lower tier covered transactions and in all solicitations for lower tier covered transactions.

7. A participant in a covered transaction may rely upon a certification of a prospective participant in a lower tier covered transaction that it is not debarred, suspended, ineligible, or voluntarily excluded from the covered transaction, unless it knows that the certification is erroneous. A participant may decide the method and frequency by which it determines the eligibility of its principals. Each participant may, but is not required to, check the Nonprocurement List by contacting BART Procurement Department, email chogan@bart.gov for assistance.

8. Nothing contained in the foregoing shall be construed to require establishment of a system of records in order to render in good faith the certification required by this clause. The knowledge and information of a participant is not required to exceed that which is normally possessed by a prudent person in the ordinary course of business dealings.

9. Except for transactions authorized under paragraph 5 of these instructions, if a participant in a covered transaction knowingly enters into a lower tier covered transaction with a person who is suspended, debarred, ineligible, or voluntarily excluded from participation in this transaction, in addition to other remedies available to the Federal Government, the department or agency with which this transaction originated may pursue available remedies, including suspension and/or debarment.

CERTIFICATION REGARDING DEBARMENT, SUSPENSION, INELIGIBILITY AND VOLUNTARY EXCLUSION - LOWER TIER COVERED TRANSACTIONS

1. The prospective lower tier participant certifies, by submission of this proposal, that neither it nor its principals is presently debarred, suspended, proposed for debarment, declared ineligible, or voluntarily excluded from participation in this transaction by any Federal department or agency.

2. Where the prospective lower tier participant is unable to certify to any of the statements in this certification, such prospective participant shall attach an explanation to this proposal.

Date: _____ _____

Name of Bidder

By: _____

Signature of Representative

_____

Print Name and Title of Representative

BUY AMERICA CERTIFICATE

Certification requirement for procurement of steel, iron, or manufactured products.

(Submit with Bid)

(Bidder's attention is directed to Supplementary Conditions Article SC7.2. This Buy America Certificate shall be executed by Bidder whose Bid exceeds $150,000 and submitted with the Bid. Failure to do so will make the Bid non-responsive.)

NOTE: The two signature blocks below are mutually exclusive; Bidder shall sign only one signature block for either the Certificate of Compliance or the Certificate of non-Compliance. Signing both signature blocks shall make the Bid non-responsive.

Certificate of Compliance With 49 USC § 5323(j)(1)

The Bidder hereby certifies that it will comply with the requirements of 49 USC § 5323(j)(1), and the applicable regulations in 49 CFR Part 661.

Date _____

Signature _____

Company Name_____

Title _____



WARNING!!! BIDDER SHALL SIGN ONLY ONE CERTIFICATE – EITHER THE CERTIFICATE OF COMPLIANCE ABOVE OR THE CERTIFICATE OF NON-COMPLIANCE BELOW. SIGNING BOTH CERTIFICATES SHALL MAKE THE BID NON-RESPONSIVE.

Certificate of Non-Compliance With 49 USC § 5323(j)(1)

The Bidder hereby certifies that it cannot comply with the requirements of 49 USC § 5323(j)(1), but it may qualify for an exception to the requirements pursuant to 49 USC § 5323(j)(2)(B) or (j)(2)(D) and applicable regulations in 49 CFR Part 661.7.

Date _____

Signature _____

Company Name_____

Title _____

REQUIRED – U.S. DOT BIDDER'S LIST FORM

ATTENTION:

To comply with federal regulations (49 CFR § 26.11), the following information MUST be submitted to BART for each prime bidder and subcontractor. This includes all DBEs and non-DBEs who bid as prime contractors and subcontractors.

WARNING: You MUST list itself and all anticipated subcontractors, regardless of their dollar amount or percent proposed, and regardless of whether they are certified as a DBE or not. Also, a complete response for each field is required for every section a prime or subcontractor is listed. Failure to submit all required information within the required timeframe may result in your bid being deemed as nonresponsive.

Contract #: 15NL-140

BIDDER/ COMPANY INFORMATION		ANNUAL GROSS RECEIPTS	NAICS CODES OF EACH SCOPE OF WORK
FIRM NAME:		☐ <$1M	
ADDRESS:		☐ $1-$3M	
CITY/STATE:	Age of the Firm:	☐ $3-6M	
ZIP CODE:		☐ $6-$10M	
		☐ >$10M	
SUBCONTRACTOR COMPANY INFORMATION		**ANNUAL GROSS RECEIPTS**	**NAICS CODES OF EACH SCOPE OF WORK**
FIRM NAME:		☐ <$1M	
ADDRESS:		☐ $1-$3M	
CITY/STATE:	Age of the Firm:	☐ $3-6M	
ZIP CODE:		☐ $6-$10M	
		☐ >$10M	
FIRM NAME:		☐ <$1M	
ADDRESS:		☐ $1-$3M	
CITY/STATE:	Age of the Firm:	☐ $3-6M	
ZIP CODE:		☐ $6-$10M	
		☐ >$10M	
FIRM NAME:		☐ <$1M	
ADDRESS:		☐ $1-$3M	
CITY/STATE:	Age of the Firm:	☐ $3-6M	
		☐ $6-$10M	
		☐ >$10M	

FIRM NAME: ADDRESS: CITY/STATE:	Age of the Firm:	☐ <$1M ☐ $1-$3M ☐ $3-6M ☐ $6-$10M ☐ >$10M	
FIRM NAME: ADDRESS: CITY/STATE: ZIP CODE:	Age of the Firm:	☐ <$1M ☐ $1-$3M ☐ $3-6M ☐ $6-$10M ☐ >$10M	

CERTIFICATION REGARDING FEDERAL TAX LIABILITY AND RECENT FELONY CONVICTIONS

Pursuant to Federal law, if Bidder is a private corporation, partnership, trust, joint-stock company, sole proprietorship, or any other business association, Bidder shall certify that:

1. It has no unpaid federal tax liability that has been assessed, for which all judicial and administrative remedies have been exhausted or have lapsed, and that is not being paid in a timely manner pursuant to an agreement with the authority responsible for collecting the tax liability;

2. It has not been convicted of a felony criminal violation under any federal law within the preceding twenty four (24) months; and

3. It shall ensure that the language of this Certification be included in agreements with all subcontractors and subsuppliers at all tiers, and that all subcontractors and subsuppliers shall certify and disclose accordingly.

If the Bidder is unable to certify to any of the statements above, it shall attach an explanation to this Certification, which will be referred to the Federal Transit Administration for disposition.

The Bidder certifies or affirms the truthfulness and accuracy of the contents of the statements submitted on or with this certification. In addition, the Bidder understands and agrees that the provisions of 31 U.S.C. §§ 3801 et al. are applicable to this Certification.

Bidder: _____

Name: _____

Title: _____

Signature: _____

(Attention is directed to Instructions to Bidders Paragraph 10.A.9., Certification of Status as Certified Qualified Conveyance Company)

CERTIFICATION OF STATUS AS CERTIFIED QUALIFIED CONVEYANCE COMPANY

If the Bidder or any Subcontractor hereunder is a certified qualified conveyance company as described in California Labor Code Section 7311.1.(a), such company hereby certifies, in accordance with the provisions of California Labor Code Section 7311.1.(e) and prior to submitting a Bid, its status as a certified qualified conveyance company. Appended to this Certification is a copy of State of California, Division of Occupational Safety and Health Certification No. _____.

_____
Name of Firm

_____
Signature Date_____

_____
Print Name and Title

PRICE BID FORM

PRICE BID CHECKLIST

1.	Bid	_____
2.	Bid Schedule	_____
3.	Noncollusion Declaration	_____
4.	Designation of Subcontractors and SBEs Form	_____
5.	SBE Subcontractor Participation Affidavit	_____
6.	Bidder's SBE Questionnaire	_____

BIDDERS WHO HAVE NOT REGISTERED ON THE BART PROCUREMENT PORTAL PRIOR TO SUBMITTING A BID AND DID NOT OBTAIN THE CONTRACT DOCUMENTS FOR THIS SOLICITATION EITHER ONLINE OR DIRECTLY THROUGH THE PROCUREMENT OFFICE IN ORDER TO BE LISTED AS AN ON-LINE PLANHOLDER FOR THIS SOLICITATION, WILL NOT BE ELIGIBLE FOR AWARD OF THIS CONTRACT.

BID

TO THE SAN FRANCISCO BAY AREA RAPID TRANSIT DISTRICT

FOR **COLISEUM STATION ELEVATOR MODERNIZATION**
CONTRACT NO. 15NL-140

Name of Bidder _____

Business Address _____

_____

Address where notification should be sent _____

_____

Business office number _____

Email address_____ (where notification should be sent).

Please indicate how you found out about this contract: (check all that apply)

_____Through newspaper advertisement

_____Through BART website

_____Through one of the plan rooms

_____Through advance notice to Bidders

_____Other (_____)

The Work to be done is located in the Alameda County, State of California, and is to be done in accordance with the Contract Documents which include the Contract Drawings and the referenced sections of BART Facilities Standards, Standard Specifications, Release – R3.1.2 dated April 2018, and the Contract Book incorporating the General Conditions, Supplementary Conditions, Contract Specifications, and other documents as listed therein.

The undersigned, as Bidder, declares that the only person or parties interested in this Bid as principals are those named herein; that this Bid is made without collusion with any other person, firm or corporation; that the undersigned has carefully examined the location of the proposed Work, the annexed proposed form of Contract, and the Contract Documents therein referred to; and the undersigned proposes and agrees, if this Bid is accepted, that the undersigned will contract with the San Francisco Bay Area Rapid Transit District, in the form of the copy of the Contract annexed hereto, to provide all necessary labor, machinery, tools, apparatus, and other means of construction, and to do all the Work and provide all the materials specified in the Contract, in the manner and time therein prescribed, and according to the requirements of the Engineer as therein set forth, and that the undersigned will take in full payment therefor the following prices:

BASE BID SCHEDULE

ITEM	DESCRIPTION	QTY.	UNIT	UNIT PRICE	ITEM TOTAL
1	Mobilization (including Equipment) (10% max)	XXXX	LS	XXXX	$
2	Allowance for Differing Site Conditions	XXXX	ALLOW	XXXX	$50,000
3	Allowance for Permits Licenses and fees	XXXX	ALLOW	XXXX	$15,000
4	Allowance for Partnering Program	XXXX	ALLOW	XXXX	$25,000
5	Allowance for District Caused Delays	XXXX	ALLOW	XXXX	$20,000
6	Allowance for RWP Training	XXXX	ALLOW	XXXX	$24,000
7	Allowance for Handling and Disposal of Hazardous Material	XXXX	ALLOW	XXXX	$30,000
8	Allowance for Operating System Delays	XXXX	ALLOW	XXXX	$50,000
9	Allowance for Elevator #30 existing roof and drain	XXXX	ALLOW	XXXX	$25,000
10	Allowance for Incentive Bonus- if eligible (See SC8.2.1)	XXXX	ALLOW	XXXX	$1,000,000
11	Allowance for Watchperson Activities	XXXX	ALLOW	XXXX	$25,000,000
12	Contractor's Field Office	1	EA	$	$
13	Non-Illuminated Signage, vinyl graphics over plywood	13	EA	$	$
14	Non-Illuminated Signage, vinyl graphics over aluminum	2	EA	$	$
15	Staging barrier 8' high wall	208	LF	$	$
16	Demonstration and Training	500	HR	$	$

Selective Demolition

ITEM	DESCRIPTION	QTY.	UNIT	UNIT PRICE	ITEM TOTAL
17	Demo – section of existing storage room wall	1	EA	$	$
18	Demo – existing storage door	1	EA	$	$
19	Demo – existing wall finish	1	EA	$	$
20	Demo – existing elevator steel support	4	EA	$	$
21	Demo – existing sump pumps and piping	2	EA	$	$
22	Demo – existing fire sprinkler piping, valve, etc.	1	EA	$	$
23	Demo – existing electrical power	1	EA	$	$

Structural

ITEM	DESCRIPTION	QTY.	UNIT	UNIT PRICE	ITEM TOTAL
24	Pit ladder	1	EA	$	$
25	Angle iron support sill support (sidewalk)	123	LB	$	$
26	Angle iron support sill support (upper walkway)	230	LB	$	$
27	Anchor w/ 3-1/4" embedment	12	EA	$	$

28	Expansion anchor w/ 2-1/4" embedment	16	EA	$	$

ITEM	DESCRIPTION	QTY.	UNIT	UNIT PRICE	ITEM TOTAL
29	Angle iron support	70	LB	$	$
30	Grating – type W-19-4	4.5	SF	$	$
31	Bent plate	88.4	LB	$	$
32	Welding to plate	4	LF	$	$
33	Steel Plate	12	LB	$	$
34	Bolt for plate attachment	10	EA	$	$
35	#4 Rebars in pads	24	LB	$	$
36	#4 Dowels	52	EA	$	$
37	#3 Dowels	8	EA	$	$
38	Fiberboard	10	LF	$	$
39	Concrete equipment pad form work	2	EA	$	$
40	Concrete	.5	CY	$	$

Architectural

ITEM	DESCRIPTION	QTY.	UNIT	UNIT PRICE	ITEM TOTAL
41	Gyp wall board, Type A	92	SF	$	$
42	Gyp wall board, Type B	50	SF	$	$
43	Gyp wall board, Type C	80	SF	$	$
44	Gyp wall board, Type D	30	SF	$	$
45	SS Corner guard	3	EA	$	$
46	SS pipe cover enclosure-horizontal 6.5" W	20	LF	$	$
47	SS pipe cover- vertical 8" W	16	LF	$	$
48	SS pipe cover enclosure-horizontal 8.5" W	14	LF	$	$
49	Hooded dome cap and body	1	EA	$	$
50	SS Pipe flashing, collar	1	EA	$	$
51	GSM Flashing	8.5	LF	$	$
52	GSM Counter flashing	11.25	LF	$	$
53	Door, frame, and hardware	1	EA	$	$
54	Door replacement at Mezzanine level	1	EA	$	$
55	SS Access door and frame	1	EA	$	$
56	Concrete Waterproofing	1176	SF	$	$
57	Fire rated sealant over backer rod	188	LF	$	$
58	Epoxy Floor paint	677	SF	$	$
59	Steam Cleaning	2	EA	$	$

Mechanical

ITEM	DESCRIPTION	QTY.	UNIT	UNIT PRICE	ITEM TOTAL
60	1-1/2 HP Submersible sump pump	2	EA	$	$
61	2” pump discharge piping	150	LF	$	$
62	3” pump discharge piping	275	LF	$	$
63	Misc. pipe fittings, valves, etc.	1	EA	$	$
64	Sump waste water oil filter tank	2	EA	$	$
65	4” Sanitary Sewer pipe	6	LF	$	$
66	2” Sanitary vent pipe	9	LF	$	$
67	Hub drain w/ p-trap	1	EA	$	$
68	Vent thru roof; flashing & vent cap	1	EA	$	$
69	Cold water pipe Type K	5	LF	$	$
70	1/2" CW connection to existing 3/4" CW	1	EA	$	$
71	1/2" shut-off valve	1	EA	$	$
72	Trap primer w/ shut-off valve	1	LS	$	$
73	Condensate pump	1	EA	$	$
74	Condensate pipe with insulation	30	LF	$	$
75	Condensate drain pipe	15	LF	$	$
76	Split AC unit	1	EA	$	$
77	Refrigerant piping w/ insulation	60	LF	$	$
78	AC unit thermostat and temperature sensor	2	EA	$	$
79	24x12 supply air duct	88	LB	$	$
80	24x12 duct vanned 90 deg elbow	2	EA	$	$
81	8x8 duct access door	1	EA	$	$
82	16x24x14 supply air plenum	1	EA	$	$
83	18x24x24 return air/ filter plenum w/ hinged access door	1	EA	$	$
84	Flexible duct connector, supply, and return	2	EA	$	$
85	Insulation supply and return 1” liner	40	SF	$	$

Electrical

ITEM	DESCRIPTION	QTY.	UNIT	UNIT PRICE	ITEM TOTAL
86	Panel “P11” 227/480V, 3p, 4w 225A	1	EA	$	$
87	Panel “LA126” 120/208V, 3p, 4w 100A	1	EA	$	$
88	30A/2P Fused disconnect switch	6	EA	$	$
89	100A/3P Fused disconnect switch	2	EA	$	$
90	30A/3P non-fused disconnect switch	4	EA	$	$
91	15KVA-480/120V, 3P, 4w Transformer	1	EA	$	$
92	Sump pump controller connection	2	EA	$	$
93	Elevator controller connection	2	EA	$	$
94	Condensate Unit connection	1	EA	$	$
95	Air Handling unit connection	1	EA	$	$
96	Sump Pump (Elevator #3) connection	1	EA	$	$
97	Sump Pump (Elevator #30) connection	1	EA	$	$
98	Condensate pump connection	1	EA	$	$
99	LED Pendant mount linear fixture Type "A"	7	EA	$	$
100	LED Wall mount linear fixtures Type "B"	6	EA	$	$
101	Wall mounted light switch	2	EA	$	$
102	Wall mounted light switch (WP)	2	EA	$	$
103	Wall mounted duplex receptacle	3	EA	$	$
104	Wall mounted duplex receptacle (GFI)	3	EA	$	$
105	2 1/2" GRS conduit	600	LF	$	$
106	1 1/4" GRS conduit	200	LF	$	$
107	1" GRS conduit	20	LF	$	$
108	3/4" GRS conduit	550	LF	$	$
109	#4/0 AWG, THWN	2,500	LF	$	$
110	#12 AWG, THWN	2,300	LF	$	$
111	#10 AWG, THWN	20	LF	$	$
112	#8 AWG, THWN	300	LF	$	$
113	#6 AWG, THWN	800	LF	$	$
114	#4 AWG, THWN	600	LF	$	$

Fire Life Safety

ITEM	DESCRIPTION	QTY.	UNIT	UNIT PRICE	ITEM TOTAL
115	Smoke damper connection	2	EA	$	$
116	Fire Alarm Control Panel (FACP)	1	EA	$	$
117	Fire Alarm Heat Detector wall mounted (WP)	4	EA	$	$
118	Fire Alarm Heat Detector ceiling mounted	1	EA	$	$
119	Fire Alarm Smoke Detector ceiling mounted	1	EA	$	$
120	Fire Alarm Control Module	10	EA	$	$

121	Monitor Module	4	EA	$	$
122	Fire Alarm #16 AWG cable, Type THWN	3,000	LF	$	$
123	24x12 Fire smoke damper	1	EA	$	$
124	24x24 Fire smoke damper	1	EA	$	$
125	3/4" GRS Conduit	5	LF	$	$
126	1-1/2” Fire sprinkler piping	10	LF	$	$
127	1” Fire sprinkler piping, Sch 40 w/ fittings, support, and hangers	310	LF	$	$
128	1” Seismic pipe loop	1	EA	$	$
129	1-1/2” FS to (E) 4” WSP connection	1	EA	$	$
130	FS piping connection from (E) to new	2	EA	$	$
131	Drain outside Mechanical Room	15	LF	$	$
132	Drain to hub drain in Cust. Rm.	15	LF	$	$
133	Sprinkler heads in Elevator pit	2	EA	$	$
134	Sprinklers Tee and drain plugs in Elevator pits	2	EA	$	$
135	Isolation/ shut-off valve w/tamper switch in (E) Mechanical Room	1	EA	$	$
136	Isolation/ shut-off valve w/ tamper switch in (E) Custodial and Trash Room	2	EA	$	$
137	Flow switches	2	EA	$	$
138	Fire Alarm programing and testing	1	EA	$	$

Communications

ITEM	DESCRIPTION	QTY.	UNIT	UNIT PRICE	ITEM TOTAL
139	Communication Interface Cabinet	1	EA	$	$
140	Elevator Interface Cabinet	2	EA	$	$
141	24x12x8 Nema wall/column mounted pullbox	9	EA	$	$
142	12x12x8 Nema wall mounted pullbox	1	EA	$	$
143	Telephone outlet dual jack Cat 6	2	EA	$	$
144	CCTV Camera	4	EA	$	$
145	Thermostat conduit and wiring to SCADA	50	LF	$	$
146	Patch panel Cat 6	1	EA	$	$
147	CAT 6 cabling	1,200	LF	$	$
148	CAT 6A	650	LF	$	$
149	48 STR-MM-FO	600	LF	$	$
150	25 pair Control Cable	120	LF	$	$
151	2" GRS Conduit	100	LF	$	$
152	1" GRS Conduit	600	LF	$	$
153	3/4" GRS Conduit	1,200	LF	$	$
154	#12 AWG	250	LF	$	$
155	CCTV surveillance camera programming and testing	1	EA	$	$

Conveying System

ITEM	DESCRIPTION	QTY.	UNIT	UNIT PRICE	ITEM TOTAL
156	Demo – Elevator #03	1	EA	$	$
157	Demo – Elevator #30	1	EA	$	$
158	Install Modernize Elevator #03	1	EA	$	$
159	Install Modernize Elevator #30	1	EA	$	$
160	Elevator Cab SS finish #03	1	EA	$	$
161	Elevator Cab SS finish #30	1	EA	$	$
162	Elevator spray-on flooring	62	SF	$	$

Closeout

ITEM	DESCRIPTION	QTY.	UNIT	UNIT PRICE	ITEM TOTAL
163	Equipment O&M Manuals	1	EA	$	$
164	Spare Parts	1	EA	$	$
165	Equipment as Built & Final Drawings	1	EA	$	$
166	Equipment Basic Training Class	1	EA	$	$
167	Equipment Advanced Training Class	1	EA	$	$
168	Maintenance Services	1	EA	$	$
169	Final Cleanup and Site Restoration	1	EA	$	$

TOTAL BASE BID PRICE (ITEMS 1 THROUGH 169 INCLUSIVE) $_____

The above item totals for all Bid Items 1 through 169 are submitted by the Bidder for the convenience of the District. In the event of a discrepancy between the Bid Unit Price and the amount entered in the item total column, the Bid Unit Price shall govern. However, if the Unit Price is not entered but the item total is provided, then the District will calculate the Unit Price by dividing the item total by the estimated quantity for that Bid Item. Conversely if the item total is not entered but Unit Price is provided, then the District will calculate the item total by multiplying the estimated quantity by the Unit Price. The District will calculate the total Bid Price based on the unit prices or lump sum prices bid, as applicable. In the event of a discrepancy between the District's calculations and the item totals for all Bid Items as submitted by the Bidder, the District's calculations shall govern.

The District reserves the right, in its sole discretion, to make no Award, or to make an Award to the lowest responsible Bidder.

FOR A BID TO BE CONSIDERED, ALL ITEMS MUST BE BID.

THE DISTRICT RESERVES THE RIGHT TO REJECT ANY AND ALL BIDS.

If this Bid shall be accepted and the undersigned shall fail to contract as aforesaid and to give the two bonds in the sums to be determined as specified, with surety satisfactory to the District, or furnish specified Certificates of Insurance within ten (10) Days after the Bidder has received notice from the District that the Contract has been awarded unless the District, in its discretion, allows additional time in writing for such submissions, the District may, at its option, determine that the Bidder has abandoned the Contract; thereupon this Bid and the acceptance thereof shall be null and void, and the forfeiture of such security accompanying this Bid shall occur and the same shall be the property of the District.

Accompanying this Bid is [1]_____ in an amount equal to at least ten percent (10%) of the total Bid Price.

Receipt of the following attached Addenda is hereby acknowledged:

Addenda numbers _____

The Bidder, _____
(name),
hereby certifies that:

(A) Not Used.

(B) Bidder is aware of the provisions of Supplementary Conditions Article SC7.2.2 federal Build America, Buy America Act (BABAA) understands it requirements and has asked for explanations of anything it did not understand.

(C) Bidder is aware of the provisions of Supplementary Conditions Article SC7.11 Iran Contracting Act of 2010, and by submission of a Bid certifies that it is not identified in the California Department of General Services (DGS) list of ineligible vendors or persons that provide goods or services to the energy sector of Iran.

(D) Bidder has read the General Conditions included and available at **www.bart.gov**, understands it requirements and has asked for explanations of anything it did not understand.

(E) Bidder has read the Federal Wage Guidelines available at **www.dol.gov** , understands it requirements and has asked for explanations of anything it did not understand.

(F) Bidder has read the Contract Book, understands its requirements, including those for keeping records, and has asked for explanations of anything it did not understand.

[2] Bidder holds California Contractor's license No._____, Classification _____. The license expiration date is _____. Bidder's current DIR Contractor's Registration Number is _____
If the Bidder is a joint venture, list the California Contractor's license numbers, classifications and expiration dates and DIR Contractor's Registration Numbers for each joint venturer as follows:

[3] Name of Joint Venturer	Contractor's License	Classification	Expiration Date	DIR Contractor's Registration
A._____	_____	_____	_____	_____
B._____	_____	_____	_____	_____
C._____	_____	_____	_____	_____

Failure to provide any joint venturer's information as required above may render the Bid non-responsive.

As described in Instructions to Bidders 10.A.9, if Bidder or any Subcontractor is a certified qualified conveyance company as described in California Labor Code Section 7311.1.(a), such company shall execute the Certification of Status as Qualified Conveyance Company and submit a copy of its Certification issued by the State of California, Division of Occupational Safety and Health included in this Bid Form.

Bidder declares under penalty of perjury that the foregoing is true and correct.

_____
[4] Name of Bidder

_____

(4) Signature of Bidder

(5)

(6) _____

Print Name and Title of Person Signing

Dated _____.

NOTES:

(1) Insert the words "cash," "cashier's check," "certified check," or "Bidder's Bond," as the case may be.

(2) If the Bidder is joint venture the Bidder may submit its valid State Contractor's license number, classification and expiration date with the Bid, but shall submit such information no later than 2:00 p.m. on Friday of the week following the date of Bid opening to the Contract Administrator at the address indicated in the Instructions to Bidders

(3) If the joint venture consists of more than three joint ventures, add additional lines as needed.

(4) If the Bidder is a joint venture, the name of the Bidder and the signature shall match the name of the joint venture and the signature as provided in the joint venture agreement and conform with the requirements in the Instructions to Bidders.

(5) If the Bidder in its Bid furnished anything not called for by these Contract Documents (a cover letter, Bidder's own form, or a notation on the Bid Form not called for by this form, for example), the Bidder is cautioned that it runs the risk that it has submitted a Bid which does not conform to the District's Contract Documents, and therefore must be rejected.

(6) Bids shall be presented under sealed cover as provided in the Instructions to Bidders.

NONCOLLUSION DECLARATION

(To be executed by Bidder and submitted with Price Bid)

_____, declares that he or she is _____ of _____
(Bidder's Name) (Title) (Company's Name)

the party making the foregoing Bid, that the Bid is not made in the interest of, or on behalf of, any undisclosed person, partnership, company, association, organization, or corporation; that the Bid is genuine and not collusive or sham; that the Bidder has not directly or indirectly colluded, conspired, connived, or agreed with any Bidder or anyone else to put in a sham Bid, or that anyone shall refrain from bidding; that the Bidder has not in any manner, directly or indirectly, sought by agreement, communication, or conference with anyone to fix to the Bid Price of the Bidder or any other bidder, or to fix any overhead, profit, or cost element of the Bid Price, or of that of any other bidder, or to secure any advantage against the public body awarding the Contract of anyone interested in the proposed Contract; that all statements contained in the Bid are true; and, further, that the Bidder has not, directly or indirectly, submitted its Bid Price or any breakdown thereof, or paid, and will not pay, any fee to any corporation, partnership, company association, organization, bid depository, or to any member or agent thereof to effectuate a collusive or sham bid.

I certify (or declare) under penalty or perjury under the laws of the State of California that the foregoing is true and correct.

Date: _____ _____
Name of Bidder

_____
Signature of Bidder

DESIGNATION OF SUBCONTRACTORS AND SBEs FORM

To comply with the requirements of the California Subletting and Subcontracting Fair Practices Act (California Public Contract Code Section 4100 et seq.). Bidder shall list in Part I on this form the name and address of each Subcontractor to whom Bidder proposes to subcontract more than 1/2 of 1% of the Work, description of portion of work or services subcontracted, total dollar amount of the portions of the work or services subcontracted, whether the Subcontractor is a SBE, and the California contractor license number of the Subcontractor. An inadvertent error in listing a Subcontractor's California contractor license number may be corrected by Bidder within twenty four (24) hours after the Bid opening provided the corrected contractor's license corresponds to the submitted name and location for that Subcontractor. The above list of information shall be submitted with the Bid. Other information required in Part I herein may be submitted up to 24 hours after the designated time to submit the Bid. Bidder's attention is directed to General Conditions Article GC5.7.1.

In the column provided for SBE designation, indicate if the Subcontractor listed is a Small Business Entity as defined in the Supplementary Conditions Article SC7.

Pursuant to Section 1725.5 and Section 1771.1 of the State Labor Code, all Contractors and Subcontractors must be registered with the California Department of Industrial Relations (DIR) in order to be qualified to bid on this Contract or to be listed as a Subcontractor. An inadvertent error in listing a Subcontractor who is not registered pursuant to Section 1725.5 in a Bid, may be corrected by the Bidder within twenty four (24) hours after the Bid opening if the Subcontractor registers and pays the penalty registration fee described in Section 1725.5 of the State Labor Code. Alternatively, the Subcontractor may be replaced with a registered Subcontractor pursuant to Section 4107 of the Public Contract Code.

Attach additional copies of this form if more space is needed and paginate the forms (i.e., Page __ of __)

Name and Address		SBE (Check if SBE) and Insert SBE Cert. No.	Description of Portion of Work or Services Subcontracted	Total Dollar Amount of Subcontracted Work or Services
I. All Subcontractors (first-tier Non-SBEs and SBEs) subject to the requirements of General Conditions Article C5.7.1				
Name:_____ Address:_____ _____ _____ License #:_____ DIR #:_____ Phone Number:_____ Age of Firm:_____ Annual Gross Receipts as of last Tax Year: $_____		**SBE Cert. No. _____**		
Name:_____ Address:_____ _____ _____ License #:_____ DIR #:_____ Phone Number:_____ Age of Firm:_____ Annual Gross Receipts as of last Tax Year: $_____		**SBE Cert. No. _____**		
Name:_____ Address:_____ _____ _____ License #:_____ DIR #:_____ Phone Number:_____ Age of Firm:_____ Annual Gross Receipts as of last Tax Year: $_____		**SBE Cert. No. _____**		

Name and Address		SBE (Check if SBE) and Insert SBE Cert. No.	Description of Portion of Work or Services Subcontracted	Total Dollar Amount of Subcontracted Work or Services

Name and Address		SBE (Check if SBE) and Insert SBE Cert. No.	Description of Portion of Work or Services Subcontracted	Total Dollar Amount of Subcontracted Work or Services
II. All Subcontractors (first-tier Non-SBEs and SBEs) not subject to the requirements of General Conditions Article GC5.7.1.				
Name:_____ Address:_____ _____ _____ License #:_____ DIR #:_____ Trucking Firm: ☐ Trucking Broker ☐ Phone Number:_____ Age of Firm:_____ Annual Gross Receipts as of last Tax Year: $_____		**SBE Cert. No. _____**		
Name:_____ Address:_____ _____ _____ License #:_____ DIR #:_____ Trucking Firm: ☐ Trucking Broker ☐				

Name and Address		SBE (Check if SBE) and Insert SBE Cert. No.	Description of Portion of Work or Services Subcontracted	Total Dollar Amount of Subcontracted Work or Services
Phone Number:_____ Age of Firm:_____ Annual Gross Receipts as of last Tax Year: $_____				
Name:_____ Address:_____ _____ _____ License #:_____ DIR #:_____ Trucking Firm: ☐ Trucking Broker ☐ Phone Number:_____ Age of Firm:_____ Annual Gross Receipts as of last Tax Year: $_____		**SBE Cert. No. _____**		

Name and Address		SBE (Check if SBE) and Insert SBE Cert. No.	Description of Portion of Work or Services Subcontracted	Total Dollar Amount of Subcontracted Work or Services
III. All first-tier Non-SBE and SBE Suppliers: Manufacturers (100% credit)				
Name:_____ Address:_____ _____ _____ License #:_____ DIR #:_____ Phone Number:_____ Age of Firm:_____ Annual Gross Receipts as of last Tax Year: $_____		**SBE Cert. No. _____**		
Name:_____ Address:_____ _____ _____ License #:_____ DIR #:_____ Phone Number:_____ Age of Firm:_____ Annual Gross Receipts as of last Tax Year: $_____		**SBE Cert. No. _____**		
Name:_____ Address:_____ _____ _____ License #:_____ DIR #:_____ Phone Number:_____ Age of Firm:_____ Annual Gross Receipts as of last Tax Year: $_____		**SBE Cert. No. _____**		

Name and Address		SBE (Check if SBE) and Insert SBE Cert. No.	Description of Portion of Work or Services Subcontracted	Total Dollar Amount of Subcontracted Work or Services

Name and Address		SBE (Check if SBE) and Insert SBE Cert. No.	Description of Portion of Work or Services Subcontracted	Total Dollar Amount of Subcontracted Work or Services
IV. All first-tier SBE Suppliers:				
Name:_____ Address:_____ _____ _____ License #:_____ DIR #:_____ Phone Number:_____ Age of Firm:_____ Annual Gross Receipts as of last Tax Year: $_____		**SBE Cert. No. _____**		
Name:_____ Address:_____ _____ _____ License #:_____ DIR #:_____ Phone Number:_____ Age of Firm:_____ Annual Gross Receipts as of last Tax Year: $_____		**SBE Cert. No. _____**		
Name:_____ Address:_____ _____ _____ License #:_____ DIR #:_____ Phone Number:_____ Age of Firm:_____ Annual Gross Receipts as of last Tax Year: $_____		**SBE Cert. No. _____**		

Name and Address		SBE (Check if SBE) and Insert SBE Cert. No.	Description of Portion of Work or Services Subcontracted	Total Dollar Amount of Subcontracted Work or Services

Name and Address		SBE (Check if SBE) and Insert SBE Cert. No.	Description of Portion of Work or Services Subcontracted	Total Dollar Amount of Subcontracted Work or Services
V. All other first-tier SBEs				
Name:_____ Address:_____ _____ _____ License #:_____ DIR #:_____ Phone Number:_____ Age of Firm:_____ Annual Gross Receipts as of last Tax Year: $_____		**SBE Cert. No. _____**		
Name:_____ Address:_____ _____ _____ License #:_____ DIR #:_____ Phone Number:_____ Age of Firm:_____ Annual Gross Receipts as of last Tax Year: $_____		**SBE Cert. No. _____**		
Name:_____ Address:_____ _____ _____ License #:_____ DIR #:_____ Phone Number:_____ Age of Firm:_____ Annual Gross Receipts as of last Tax Year: $_____		**SBE Cert. No. _____**		

Name and Address		SBE (Check if SBE) and Insert SBE Cert. No.	Description of Portion of Work or Services Subcontracted	Total Dollar Amount of Subcontracted Work or Services

SBE SUBCONTRACTOR PARTICIPATION AFFIDAVIT

This affidavit is to be completed by each SBE Subcontractor or Supplier, listed by the three apparent lowest Bidders and submitted to the respective prime Bidder. The three apparent lowest Bidders shall submit the completed affidavits and copies of the SBE Subcontractor's or Supplier's bid quotations to BART within five (5) Working Days following the date of Bid opening. Subcontractor or Supplier may attach additional sheets if more space is needed to provide complete information.

Name of Bidder:_____

Name of SBE Subcontractor or Supplier (your firm):_____

Amount of Subcontract: $_____ Scope of Work:_____

Anticipated Work Start Date:_____

Trucking Firm: ☐

Trucking Broker ☐

Check one:

☐ My firm will NOT subcontract any portion of our work to another Subcontractor.

☐ My firm WILL subcontract a portion of our work to another Subcontractor(s).

[If your firm will subcontract a portion of your work, please complete below, listing all work to be subcontracted]

Name of second-tier Subcontractor	Check if SBE		Amount	Percentage
			$	%
			$	%
			$	%
			$	%
			$	%
			$	%
			$	%
			$	%
			$	%

I declare, under penalty of perjury under the laws of the State of California, that the foregoing is true and correct, is within my personal knowledge, and if called upon to testify, I could testify completely thereto.

_____

Signature of Subcontractor Owner/Authorized Representative Executed on Date:

Title:_____

_____

Print Name of Subcontractor Owner/Authorized Representative Phone:

BIDDER'S SBE QUESTIONNAIRE

Is Bidder a BART certified SBE? ___ YES ___ NO
(See Supplementary Conditions Article SC7.1.1 for definition of SBE)

If YES, enter Certification Date: _____

Is Bidder a joint venture with SBE partners? [2] ___ YES ___ NO

If YES, are Joint Venture Forms attached? ___ YES ___ NO

Percentage (%) of SBE participation in joint venture: _____ %

Age of Firm: _____

Annual Gross Receipts as of last Tax Year: $_____

SBE Bidder Amount of Contract of Work: $_____

[2] If the Bidder is a joint venture, only the portion of the total dollar value of the Contract equal to the distinct, clearly defined portion of the work that is performed solely by the SBE's own forces can be counted toward SBE participation respectively. If the work is not clearly delineated between the SBE and the joint venture partner, only the portion or the work equal to the SBE's percentage ownership interest in the joint venture will be counted. See Supplementary Conditions Article SC7.1.3D.1.

SAN FRANCISCO BAY AREA RAPID TRANSIT DISTRICT

CONTRACT

THIS CONTRACT, for the **COLISEUM STATION ELEVATOR MODERNIZATION** Contract No. 15NL-140 is made and entered into this ___day of _____, 20___, between the San Francisco Bay Area Rapid Transit District (District) and _____ (Contractor).

ARTICLE I

In consideration of the payments and agreements hereinafter set forth to be made and performed by District and Contractor, and under the conditions expressed in the bond(s) of even date herewith and attached hereto, Contractor agrees with District to do all the work and furnish all the materials (except those expressly stated in the Contract Documents to be furnished by the District) (Work) necessary for the completion of the Work in a good, workmanlike and substantial manner and to the satisfaction of the District, for the **COLISEUM STATION ELEVATOR MODERNIZATION,** Contract No. 15NL-140 in accordance with the Contract Documents attached hereto. The Contract Documents are by this reference expressly incorporated herein and made a part hereof.

All capitalized terms used but not defined in this Contract shall have the meanings ascribed to them in the Contract Documents.

ARTICLE II

Contractor agrees to accept the prices set forth in Contractor's Bid to District for the above-described construction and furnishing of materials as full compensation for doing all portions of the Work contemplated and embraced in this Contract, as well as for all loss or damage arising out of the nature of the Work aforesaid, or from the action of the elements, or from any unforeseen difficulties or obstructions which may arise or be encountered in the prosecution of the Work under this Contract until final Acceptance of the Work by District, and for all risks of every description connected with this Contract, and for all expenses incurred by or in consequence of the suspension or discontinuance of the Work.

ARTICLE III

Contractor hereby promises and agrees with District to do the Work according to the terms and conditions herein contained and referred to, for the prices aforesaid, and District contracts to pay for the same at the time, in the manner and upon the conditions as above set forth; and the said parties for themselves, their heirs, executors, administrators, successors and assigns do hereby agree to the full performance of all of the covenants and conditions herein contained.

ARTICLE IV

The Statement of Prevailing Wages referenced in the attached Invitation to Bid and the Designation of Subcontractors and SBEs Form provided by Contractor and submitted together with Contractor's Bid are hereby specifically referred to and by this reference expressly incorporated herein and made a part hereof. Contractor and District expressly agree that should there be any conflict between the terms of this Contract and Contractor's Bid, then the terms of this Contract shall control, and nothing herein shall be considered as an acceptance of any terms of the Bid conflicting herewith.

ARTICLE V

By executing this Contract, Contractor certifies that it is aware of the provisions of Section 3700 of the California Labor Code which require every employer to be insured against liability for Workers' Compensation or to undertake self-insurance in accordance with the provisions of that Code, and

Contractor covenants and agrees to comply with such provisions prior to commencing the performance of the Work of this Contract.

ARTICLE VI

Contractor acknowledges that all contractors in California are required by State law to be licensed, and are regulated by the Contractors' State License Board, which has jurisdiction to investigate complaints against contractors if a complaint is filed within three years of the date of the alleged violation. Any questions concerning a contractor may be referred to the Registrar, Contractors' State License Board, 9821 Business Park Drive, Sacramento, CA 95827-1703, mailing address P. O. Box 26000, Sacramento, CA 95826-0026.

IN WITNESS WHEREOF, the parties have hereunto executed this Contract as of the date first above written.

DISTRICT:

SAN FRANCISCO BAY AREA
RAPID TRANSIT DISTRICT

By: _____
President

By: _____
Secretary

CONTRACTOR:

_____
Name of Contractor

By: _____
Title:

By: _____
Title:

_____
Contractor's License Number and Expiration Date

_____
DIR Contractor's Registration Number