SAN FRANCISCO BAY AREA RAPID TRANSIT DISTRICT

BART

CONTRACT DRAWINGS

COLISEUM STATION
ELEVATOR MODERNIZATION

VOLUME 2 OF 2

ISSUED FOR BID

CONTRACT NO. 15NL-140
2026
FTA PROJECT NO. 5307 & 5337

Docusign Envelope ID: 3A50552E-B159-8236-823A-F9C15DF1A890

SAN FRANCISCO BAY AREA RAPID TRANSIT DISTRICT

COLISEUM STATION
ELEVATOR MODERNIZATION

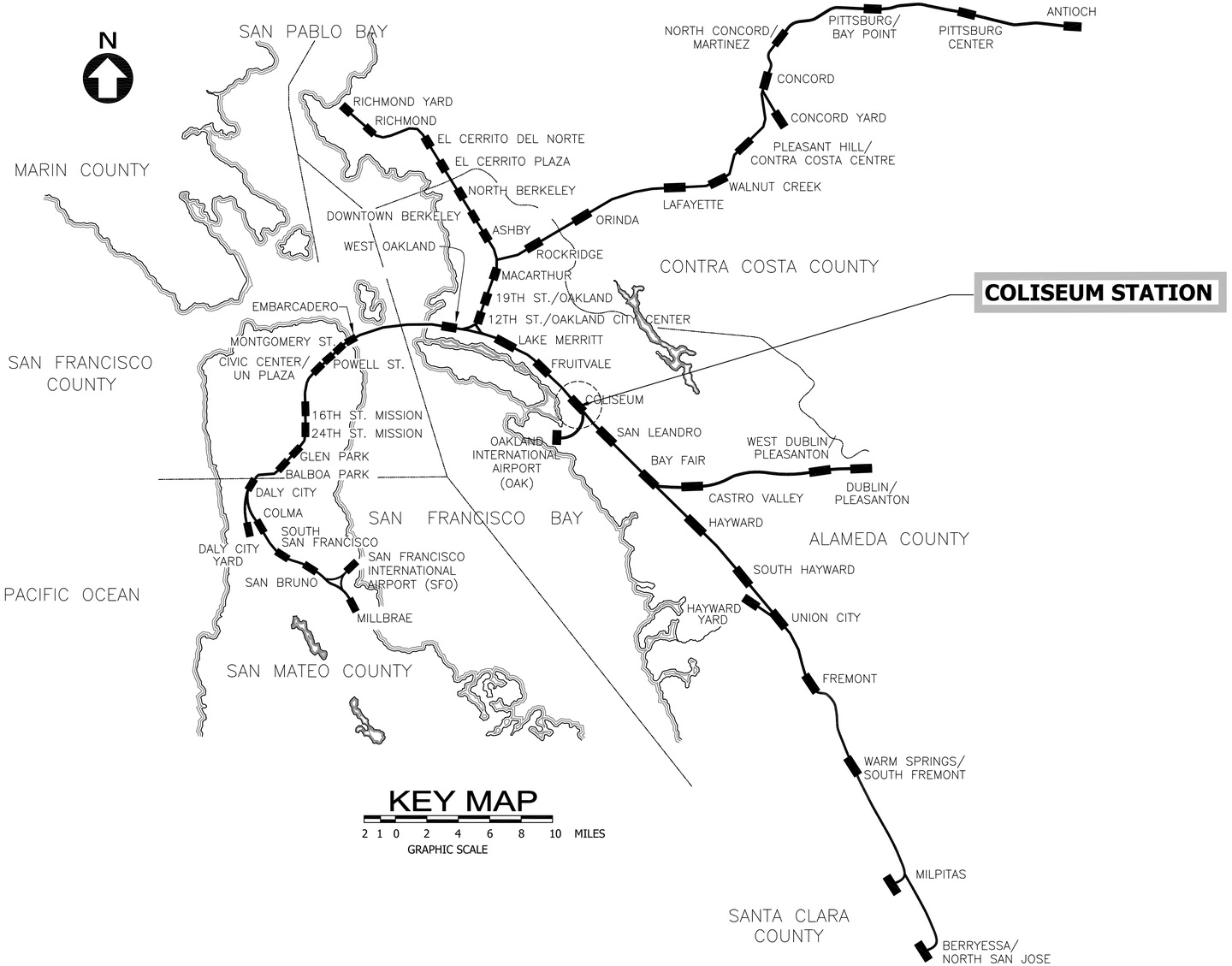

KEY MAP

2 1 0 2 4 6 8 10 MILES

GRAPHIC SCALE

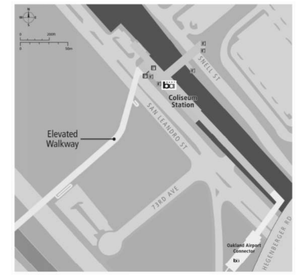

COLISEUM STATION LOCATION MAP

APPROVED DocuSigned by: Joy Sharma E4F46B0B0BGB64FF DATE 9/14/2026
Joy Sharma
CHIEF DELIVERY OFFICER

APPROVED DocuSigned by: Phoebe Cheng 6B09ED1B5BEC4E3... DATE 9/14/2026
Phoebe Cheng
CHIEF ENGINEERING OFFICER on behalf of Myat San

REV.	DATE	BY	SUB	APP.	DESCRIPTION
P	20260518				ISSUED FOR BID

DESIGNED: R. LEE
DRAWN: E. RODRIGUEZ
CHECKED: R. LEE
APPROVED: R. LEE
DATE: 20190918

LICENSED ARCHITECT RAYMOND LEE C 30458 REN: 9-30-27 STATE OF CALIFORNIA

SAN FRANCISCO BAY AREA RAPID TRANSIT DISTRICT

PGH WONG ENGINEERING, INC. — SUBMITTED

PGH WONG ENGINEERING, INC. — APPROVED

COLISEUM STATION ELEVATOR MODERNIZATION

TITLE SHEET

CADD FILENAME: 15NL-140-G001
SIZE: D | SCALE: NONE
CONTRACT NO.: 15NL-140 | REV.: P
CONTRACT SHEET NO.: G001 | PAGE NO.: 001

Plotted: Dec 15, 2025 - C:\Users\ERODRIGU\AppData\Local\Temp\Bluebeam Revu\23\Working Directory\4 Architectural\1 L CODY\15NL-140-G001 - TITLE SHEET.dwg

INDEX OF DRAWINGS

PAGE NO.	SHEET NO.	REV NO.	TITLE
GENERAL			
			COVER SHEET
001	G001	P	TITLE SHEET
002	G002	P	INDEX OF DRAWINGS
ARCHITECTURAL			
003	A001	P	ABBREVIATIONS, CODE REVIEW, AND SYMBOLS
004	A010	P	SITE KEY PLAN, PARTIAL PLANS, AND GENERAL NOTES
005	A011	P	STAGING FLOOR PLAN - CONCOURSE LEVEL
006	A012	P	CONTRACTOR LAYDOWN AREA LOCATION PLAN CONCOURSE LEVEL
007	A013	P	STAGING FLOOR PLAN MEZZANINE, WALKWAY AND PLATFORM LEVEL
008	A014	P	STAGING FLOOR PLAN
009	A121	P	PARTIAL FLOOR AND DEMOLITION PLANS CONCOURSE LEVEL
010	A122	P	PARTIAL FLOOR & ROOF PLANS MEZZANINE AND PLATFORM LEVEL
011	A401	P	PLANS AND SECTIONS/ELEVATION ELEVATOR #3
012	A402	P	PLANS AND SECTION ELEVATOR #30
013	A403	P	ELEVATOR CAB PLANS, REFLECTED CEILING PLANS AND INTERIOR ELEVATIONS ELEVATORS #3 AND #30
014	A501	P	WALL TYPES AND DETAILS
015	A502	P	MISCELLANEOUS DETAILS SHEET 1 OF 2
016	A503	P	MISCELLANEOUS DETAILS SHEET 2 OF 2
017	A601	P	FINISH SCHEDULE DOOR SCHEDULE
018	A700	P	TEMPORARY SIGNAGE
019	A701	P	PROJECT IDENTIFICATION AND GENERAL CONSTRUCTION SIGNAGE
BFS ARCHITECTURAL			
020	AS08	01	ELEVATOR CAR OPERATING PANEL DETAILS
021	AS09	00	ELEVATOR DETAILS - ENTRANCE
022	AS10	00	ELEVATOR HALL CALL DETAILS
023	AS11	00	WHITE COURTESY PHONE DETAILS
PLUMBING			
024	P101	P	OVERALL PLUMBING PLAN CONCOURSE LEVEL
025	P401	P	PARTIAL FLOOR PLAN - PLUMBING DEMOLITION CONCOURSE LEVEL
026	P402	P	PARTIAL FLOOR PLAN - PLUMBING CONCOURSE LEVEL
027	P403	P	PARTIAL FLOOR & REFLECTED CEILING PLAN INTERIOR ELEVATION & CROSS SECTIONS CONCOURSE & MEZZANINE LEVEL-PLUMBING
028	P601	P	EQUIPMENT SCHEDULES
029	P602	P	EQUIPMENT DETAILS
FIRE PROTECTION			
030	F101	P	OVERALL FIRE PROTECTION PLAN CONCOURSE LEVEL
031	F401	P	PARTIAL PLAN ELEVATORS #3 AND # 30 CONCOURSE LEVEL - FIRE SPRINKLERS
032	F402	P	PARTIAL PLAN CUSTODIAL ROOM/TRASH ROOM CONCOURSE LEVEL - FIRE SPRINKLERS
MECHANICAL			
033	M401	P	PARTIAL FLOOR PLAN ELEVATOR DETAIL CONCOURSE LEVEL - HVAC
034	M402	P	CROSS SECTION PARTIAL REFLECTED CEILING PLAN MEZZANINE LEVEL - HVAC
035	M601	P	EQUIPMENT SCHEDULES
BFS MECHANICAL			
036	MS01	04	ABBREVIATIONS
037	MS02	01	SYMBOLS SHEET 1 OF 2
038	MS03	01	SYMBOLS SHEET 2 OF 2
039	MS12	02	PLUMBING DETAILS SHEET 2 OF 3
040	MS13	02	PLUMBING DETAILS SHEET 3 OF 3
041	MS31	01	HVAC DETAILS
042	MS32	02	PIPING DETAILS
043	MS33	03	MECHANICAL EQUIPMENT DETAILS
044	MS35	01	HVAC DETAILS
045	MS39	03	MECHANICAL EQUIPMENT DETAILS
046	MS57	02	HVAC DETAILS
ELECTRICAL			
047	E001	P	ABBREVIATIONS, SYMBOLS LEGEND AND GENERAL NOTES
048	E002	P	SINGLE LINE DIAGRAM
049	E003	P	SINGLE LINE DIAGRAM
050	E004	P	CABLE & CONDUIT SCHEDULE
051	E005	P	CABLE & CONDUIT SCHEDULE
052	E101	P	DEMOLITION PLANS
053	E102	P	CONCOURSE LEVEL - ELECTRICAL PLAN AND ENLARGED LIGHTING PLAN
054	E103	P	ENLARGED PARTIAL POWER PLANS
055	E104	P	ENLARGED PARTIAL POWER PLANS
056	E301	P	CROSS SECTION AT ELEVATOR #3 SHAFT
057	E501	P	DETAILS
058	E601	P	LIGHTING FIXTURE SCHEDULE, MECHANICAL EQUIPMENT SCHEDULE & PANEL SCHEDULES
059	E701	P	FIRE ALARM SYSTEM COVER SHEET
060	E702	P	FIRE ALARM SYSTEM RISER DIAGRAM
061	E711	P	FIRE ALARM SYSTEM LOCATION PLAN CONCOURSE LEVEL
062	E712	P	FIRE ALARM SYSTEM PLANS - DEMO AND NEW WORK
COMMUNICATION, DATA NETWORK, TELEPHONE, SCADA, CCTV AND FIRE ALARM SYSTEMS			
059	T001	P	ABBREVIATIONS, SYMBOLS LEGEND AND GENERAL NOTES
060	T101	P	CONCOURSE LEVEL COMMUNICATION SYSTEM PLAN
061	T102	P	PARTIAL COMMUNICATION PLANS CONCOURSE, PLATFORM, AND WALKWAY LEVELS
062	T601	P	COMMUNICATION SYSTEMS INTERFACE BLOCK DIAGRAM
063	T602	P	DATA NETWORK RISER DIAGRAM
064	T603	P	TELEPHONE SYSTEM RISER DIAGRAM
065	T604	P	SCADA SYSTEM BLOCK DIAGRAM
066	T605	P	CCTV SYSTEM RISER DIAGRAM
055	T606	P	COMMUNICATIONS CONDUIT AND CIRCUIT SCHEDULES
056	T607	P	COMMUNICATIONS CONDUIT AND CIRCUIT SCHEDULES
ELEVATOR			
073	X101	P	GENERAL NOTES
074	X102	P	EXISTING TECHNICAL DATA
075	X103	P	PROPOSED TECHNICAL DATA
076	X104	P	ELEVATOR 3 - EXISTING PLANS AND SECTION
077	X105	P	ELEVATOR 30 - EXISTING PLANS AND SECTION
078	X106	P	EXISTING ELEVATOR MACHINE ROOM PLAN
079	X107	P	ELEVATOR 3 - PROPOSED PLANS AND SECTION
080	X108	P	ELEVATOR 30 - PROPOSED PLANS AND SECTION
081	X109	P	ELEVATOR MACHINE ROOM PLAN
REFERENCE DRAWINGS			
082	R001		CONCOURSE AREA & EQUIPMENT ROOMS PLAN & SECTIONS SHEET1
083	R002		CONCOURSE AREA PIPING SCHEMATICS & DETAILS
REFERENCE DRAWINGS - CONTINUE			
84	R003		COLISEUM STATION (A-30) PATRON PARKING WEST
85	R004		FIRE ALARM REPLACEMENT PHASE 3 ROOM AND FA-SYMBOL LEGEND 1 OF 2
86	R005		FIRE ALARM REPLACEMENT PHASE 3 ROOM AND FA-SYMBOL LEGEND 2 OF 2
87	R006		FIRE ALARM REPLACEMENT PHASE 3 FACU AND PAD 5
88	R007		FIRE ALARM REPLACEMENT PHASE 3 CURRENT AND VOLTAGE DROP
89	R008		FIRE ALARM REPLACEMENT PHASE 3 CURRENT AND VOLTAGE DROP
90	R009		FIRE ALARM REPLACEMENT PHASE 3 CURRENT AND VOLTAGE DROP
91	R010		FIRE ALARM REPLACEMENT PHASE 3 IRC - INTERPOSING RELAY CABINET DATA POINTS TO BART SCADA SYSTEM
92	R011		FIRE ALARM REPLACEMENT PHASE 3 STATION OVERVIEW
93	R012		FIRE ALARM REPLACEMENT PHASE 3 LAYOUT PLAN CONCOURSE/ STREET SHEET 1 OF 4
94	R013		FIRE ALARM REPLACEMENT PHASE 3 LAYOUT PLAN CONCOURSE/ STREET SHEET 2 OF 4
95	R014		FIRE ALARM REPLACEMENT PHASE 3 LAYOUT PLAN CONCOURSE/ STREET SHEET 3 OF 4
96	R015		FIRE ALARM REPLACEMENT PHASE 3 LAYOUT PLAN CONCOURSE/ STREET SHEET 4 OF 4
97	R016		FIRE ALARM REPLACEMENT PHASE 3 LAYOUT PLAN PLATFORM SHEET 1 OF 4
98	R017		FIRE ALARM REPLACEMENT PHASE 3 LAYOUT PLAN PLATFORM SHEET 2 OF 4
99	R018		FIRE ALARM REPLACEMENT PHASE 3 LAYOUT PLAN PLATFORM SHEET 3 OF 4
100	R019		FIRE ALARM REPLACEMENT PHASE 3 LAYOUT PLAN PLATFORM SHEET 4 OF 4
101	R020		FIRE ALARM REPLACEMENT PHASE 3 LAYOUT PLAN PEDESTRIAN BRIDGE TO COLISEUM
102	R021		FIRE ALARM REPLACEMENT PHASE 3 LAYOUT PLAN PEDESTRIAN UNDERPASS
103	R022		FIRE ALARM REPLACEMENT PHASE 3 E-POWER SUPPLY 120V SINGLE LINE DIAGRAM
104	R023		FIRE ALARM REPLACEMENT PHASE 3 DEMOLITION SCHEDULE

REV.	DATE	BY	SUB	APP.	DESCRIPTION
P	20260518				ISSUED FOR BID

DESIGNED: R. LEE
DRAWN: G. HEMMAT
CHECKED: R. LEE
APPROVED: R. LEE
DATE: 20190918

LICENSED ARCHITECT RAYMOND LEE C 30458 EXP. 9-30-27 STATE OF CALIFORNIA

SAN FRANCISCO BAY AREA RAPID TRANSIT DISTRICT

PGH WONG ENGINEERING, INC. — SUBMITTED

PGH WONG ENGINEERING, INC. — APPROVED

COLISEUM STATION ELEVATOR MODERNIZATION

INDEX OF DRAWINGS

CADD FILENAME: 15NL-140-G002
SIZE: D | SCALE: NONE
CONTRACT NO.: 15NL-140 | REV.: P
CONTRACT SHEET NO.: G002 | PAGE NO.: 002

Plotted On: Sep 18, 2026 - 1:45pm By: L:\Projects\15NL-140\Drawings\Working Drawings\A Architectural\A-1 CADD\15NL-140-G002_INDEX.dwg

ABBREVIATIONS

A/C OR AC	AIR CONDITIONING
ABV	ABOVE
ACC	ACCESSIBLE
ACOUST	ACOUSTICAL
ACT	ACOUSTICAL CEILING TILE
AD	AREA DRAIN
ADA	AMERICAN WITH DISABILITIES ACT
ADD	ADDENDUM or ADDITION
ADJ	ADJUSTABLE or ADJACENT
AFF	ABOVE FINISH FLOOR
AGG	AGGREGATE
AL or ALUM	ALUMINUM
ALT	ALTERNATE
ANOD	ANODIZED
AP	ACCESS PANEL
APPROX	APPROXIMATE
APRVD	APPROVED
ARCH	ARCHITECTURAL
ASPH	ASPHALT
ASTM	AMERICAN SOCIETY FOR TESTING & MATERIALS
AUTO	AUTOMATIC
AVG	AVERAGE
BB	BULLETIN BOARD
BC	BOTTOM OF CURB
BD	BOARD
BDRY	BOUNDARY
BEL	BELOW
BET	BETWEEN
BF	BOARD FOOT
BFS	BART FACILITIES STANDARDS
BITUM	BITUMINOUS
BLDG	BUILDING
BLK	BLOCK
BLKG	BLOCKING
BM	BEAM
BN	BULLNOSE
BO	BOTTOM OF
BP	BASE PLATE
BRZ	BRONZE
BS	BOTTOM OF SLOPE
BSMT	BASEMENT
BUR	BUILT-UP ROOF
BW	BOTTOM OF WALL or BOTH WAYS
CAB	CABINET
CAP	CAPACITY
CAV	CAVITY
CB	CATCH BASIN
CCW	COUNTER CLOCKWISE
CEM	CEMENT
CER	CERAMIC
CF	CUBIC FEET
CG	CORNER GUARD
CIP	CAST-IN-PLACE
CI	CAST-IRON
CJ	CONTROL JOINT
CK	CAULKING
CKT	CIRCUIT
CL	CENTER LINE
CLF	CHAIN LINK FENCE
CLG	CEILING
CLR	CLEAR or CLEARANCE
CMU	CONCRETE MASONRY UNIT
COL	COLUMN
CONC	CONCRETE
CONST	CONSTRUCTION
CONT	CONTINUOUS
CORR	CORRIDOR
CP	CEMENT PLASTER
CPT	CARPET
CS	CLERESTORY
CSS	COUNTERSUNK SCREW
CSWK	CASEWORK
CT	CERAMIC TILE
CTR	CENTER
CTRL	CONTROL
CU FT	CUBIC FOOT (FEET)
CU YD	CUBIC YARD(S)
CW	COLD WATER or CLOCKWISE
DEMO / (D)	DEMOLITION
DBL	DOUBLE
DEG or °	DEGREE
DEPT	DEPARTMENT
DET	DETAIL
DF	DRINKING FOUNTAIN
DIA or Ø	DIAMETER
DIAG	DIAGONAL
DIM	DIMENSION
DIV	DIVISION
DN	DOWN
DR	DOOR
DS	DOWNSPOUT
DSP	DRY STANDPIPE
DSU	DESTINATION SIGN UNIT
DWG	DRAWING
(E)	EXISTING
E	EAST
EA	EACH
EGSB	EXTERIOR GYPSUM SHEATHING BOARD
EIFS	EXTERIOR INSULATION AND FINISH SYSTEM
EJ	EXPANSION JOINT
EL	ELEVATION
ELEC	ELECTRICAL
ELEV	ELEVATOR or ELEVATION
ELEVS	ELEVATIONS
EMER	EMERGENCY
EMR	ELEVATOR MACHINE ROOM
ENCL	ENCLOSURE
EOS	EDGE OF SLAB
EQ	EQUAL
EQUIP	EQUIPMENT
EST	ESTIMATE
ETW	EDGE OF TRAVELED WAY
EW	EACH WAY
EWH	ELECTRIC WATER HEATER
EXCAV	EXCAVATE
EXF	EXTERIOR FINISH SYSTEM
EXH	EXHAUST
EXP	EXPANSION
EXT	EXTERIOR
(F)	FUTURE
FA	FIRE ALARM
FD	FLOOR DRAIN
FDC	FIRE DEPARTMENT CONNECTION
FDMPR	FIRE DAMPER
FDN	FOUNDATION
FDR	FIRE DOOR
FE	FIRE EXTINGUISHER
FEC	FIRE EXTINGUISHER CABINET
FF	FACTORY FINISH or FINISH FACE
FFL	FINISHED FLOOR LINE
FG	FINISHED GRADE
FHC	FIRE HOSE CABINET
FIN	FINISH
FIX	FIXTURE
FL	FLOOR
FLEX	FLEXIBLE
FLUOR	FLUORESCENT
FO	FACE OF
FOC	FACE OF CONCRETE
FOF	FACE OF FINISH
FOM	FACE OF MASONRY
FOS	FACE OF STUD
FR	FIRE RATED
FRP	FIBERGLASS REINFORCED PANEL
FRPF	FIREPROOF
FRT	FIRE-RESISTANT TREATED
FSR	FIRE SPRINKLER RISER
FT or '	FOOT (FEET)
FTG	FOOTING
FURN	FURNITURE
FUT	FUTURE
FW	FIRE WATER
GA	GAUGE
GALV	GALVANIZED
GEN	GENERAL
GFRC	GLASS FIBER REINFORCED CONCRETE
GFRG	GLASS FIBER REINFORCED GYPSUM
GR	GUARDRAIL
GSB	GYPSUM SHEATHING BOARD
GSM	GALVANIZED SHEET METAL
GWB	GYPSUM WALL BOARD
GYP	GYPSUM
GYP BD	GYPSUM BOARD
H or HT	HEIGHT
HC	HOLLOW CORE
HDR	HEADER
HDW	HARDWARE
HDWD	HARDWOOD
HM	HOLLOW METAL
HORIZ	HORIZONTAL
HP	HIGH POINT
HR	HOUR or HANDRAIL
HSS	HOLLOW STRUCTURAL SECTION
HVAC	HEATING, VENTILATION & AIR CONDITIONING
HW	HOT WATER
HWY	HIGHWAY
IBC	INTERNATIONAL BUILDING CODE
ID	INSIDE DIAMETER or INSIDE DIMENSION
IN or "	INCH(ES)
INCL	INCLUDING
INFO	INFORMATION
INSUL	INSULATION
INT	INTERIOR
INV	INVERT
J-BOX	JUNCTION BOX
JAN	JANITOR
JF	JOINT FILLER
JS	JANITOR'S SINK
JST	JOIST
JT	JOINT
L	LENGTH or LONG or ANGLE
LAM	LAMINATE
LAV	LAVATORY
LF	LIGHT FIXTURE
LH	LEFT HAND
LLV	LONG LEG VERTICAL
LT	LIGHT
LT WT	LIGHTWEIGHT
LTG	LIGHTING
LVL	LEVEL
LVR	LOUVER
LYR	LAYER
MACH	MACHINE
MAS	MASONRY
MAT	MATERIAL
MAX	MAXIMUM
MDF	MEDIUM DENSITY FIBER
MDO	MEDIUM DENSITY OVERLAY
MECH	MECHANICAL
MEMB	MEMBRANE
MFR	MANUFACTURER
MIN	MINIMUM
MISC	MISCELLANEOUS
MO	MASONRY OPENING
MTD	MOUNTED
MTL	METAL
MULL	MULLION
MWP	MEMBRANE WATERPROOFING
(N)	NEW
N	NORTH
NAT	NATURAL
NIC	NOT IN CONTRACT
NO or #	NUMBER
NOM	NOMINAL
NR	NON-RATED
NTS	NOT TO SCALE
O/H	OVERHEAD
OC	ON CENTER
OCC	OCCUPANCY or OCCUPANT(S)
OD	OUTSIDE DIAMETER or OUTSIDE DIMENSION
OFD	OVERFLOW DRAIN
OPNG	OPENING
OPP	OPPOSITE
OPT	OPTIONAL or OPTIMUM
ORD	OVERFLOW ROOF DRAIN
OSCI	OWNER SUPPLIED, CONTRACTOR INSTALLED
OSOI	OWNER SUPPLIED, OWNER INSTALLED
OZ	OUNCE
%	PERCENT
P-LAM	PLASTIC LAMINATE
PART BD	PARTICLE BOARD
PCC	PRECAST CONCRETE
PCP	PORTLAND CEMENT PLASTER
PERF	PERFORATED
PL	PROPERTY LINE or PLATE
PLAS	PLASTER
PLYWD	PLYWOOD
PNL	PANEL
POL	POLISHED
PR	PAIR
PRC	POLYMER REINFORCED CONCRETE
PREFAB	PREFABRICATED
PRKG	PARKING
PSF	POUNDS PER SQUARE FOOT
PSI	POUNDS PER SQUARE INCH
PT	POINT
PTD	PAINTED
PTN	PARTITION
PVMT	PAVEMENT
⊥	PERPENDICULAR
R	RADIUS or RISER
RA	RETURN AIR
RC	REINFORCED CONCRETE
RD	ROOF DRAIN
REC	RECESSED
REF	REFERENCE
REFL	REFLECTED or REFLECTIVE
REG	REGISTER
REINF	REINFORCED
REQD	REQUIRED
RESIL	RESILIENT
REV	REVISION
RF	ROOF
RFG	ROOFING
RH	RIGHT HAND or ROOF HATCH
RM	ROOM
RO	ROUGH OPENING
RTU	ROOF TOP UNIT
RV	ROOF VENT
RWL	RAIN WATER LEADER
S	SOUTH
SA	SUPPLY AIR
SAD	SEE ARCHITECTURAL DRAWING
SC	SOLID CORE
SCD	SEE CIVIL DRAWING
SCHED	SCHEDULE
SCP	SCUPPER
SD	STORM DRAIN
SECT	SECTION
SED	SEE ELECTRICAL AND COMMUNICATIONS DRAWING
SELD	SEE ELEVATOR DRAWINGS
SEP JT	SEPARATION JOINT
SF	SQUARE FOOT (FEET)
SFPD	SEE FIRE PROTECTION DRAWINGS
SHT	SHEET
SHTHG	SHEATHING
SI	SQUARE INCH(ES)
SIM	SIMILAR
SLD	SEE LANDSCAPE DRAWING
SLNT	SEALANT
SMD	SEE MECHANICAL DRAWING
SMS	SHEET METAL SCREW
SP	STANDPIPE
SPD	SEE PLUMBING DRAWING
SPEC	SPECIFICATION
SQ or □	SQUARE
SS	STAINLESS STEEL
SSD	SEE STRUCTURAL DRAWING
STD	STANDARD
STL	STEEL
STN	STAIN
STRUC	STRUCTURAL
SUSP	SUSPENDED
SYM	SYMMETRICAL
T	TREAD
T&G	TONGUE AND GROOVE
TA	TOILET ACCESSORY
TBD	TO BE DETERMINED
TC	TOP OF CURB
TD	TRENCH DRAIN
TEL	TELEPHONE
TEMP	TEMPERED
THK	THICK
TO	TOP OF
TOC	TOP OF CONCRETE
TOP	TOP OF PARAPET
TOPO	TOPOGRAPHIC
TOS	TOP OF STEEL
TP	TOP OF PAVEMENT
TS	TOP OF STAIR
TS	TUBE STEEL
TV	TELEVISION
TW	TOP OF WALL
TYP	TYPICAL
U/S	UNDERSIDE
UBC	UNIFORM BUILDING CODE
UC	UNDER CUT
UFC	UNIFORM FIRE CODE
UL	UNDERWRITERS LABORATORY
UNF	UNFINISHED
UON	UNLESS OTHERWISE NOTED
UPC	UNIFORM PLUMBING CODE
VHB	VERY HIGH BOND
VIF	VERIFY IN FIELD
VP	VISION PANEL
VWC	VINYL WALL COVERING
W	WIDE or WIDTH
W/	WITH
W/O	WITHOUT
WC	WATER CLOSET
WD	WOOD
WDW	WINDOW
WH	WEEP HOLE
WP	WATERPROOF(ING)
WR	WATER-RESISTANT
WSCT	WAINSCOT
WT	WEIGHT
WWF	WELDED WIRE FABRIC
WWM	WELDED WIRE MESH
X	TIMES or BY
YD	YARD
@	AT

SYMBOLS

REVISION CLOUD
REVISION NO.
CLOUD AROUND REVISION

WORK POINT, CONTROL POINT OR DATUM POINT

NEW SPOT ELEVATION 986.5

EXISTING SPOT ELEVATION (986.5)

TOP OF WALL TW 15.0

TOP OF CURB TC 16.0

TOP OF PAVEMENT TP 15.4

MATCH LINE

CENTER LINE

PROPERTY LINE

DOOR SYMBOL
DOOR NO

(E) CONCRETE @ SECTION

CONCRETE @ SECTION

CONCRETE @ PLAN

STEEL

GROUT

MARBLE TILE @ PLAN

CONCRETE BLOCK WALL

METAL WALL PANEL

GYP BOARD

FIRE RETARDANT INSULATION

COLUMN LINE

ROOM IDENTIFICATION
ROOM NAME JANITOR
ROOM NO 105

DETAIL
DETAIL IDENTIFICATION
SHEET WHERE DETAIL IS DRAWN
REFERENCE BOUNDARY

DETAIL
DETAIL IDENTIFICATION
SHEET WHERE DETAIL IS DRAWN

SECTION
SECTION IDENTIFICATION
DWG WHERE SECTION IS DRAWN

EXTERIOR ELEVATION (S)
ELEVATION ORIENTATION
DWG WHERE ELEVATION IS DRAWN

INTERIOR ELEVATION (S)
ELEVATION IDENTIFICATION
DWG WHERE ELEVATION IS DRAWN

PARTITION TYP DETAIL
WALL TYPE IDENTIFICATION SEE

CODE REVIEW

1. APPLICABLE CODES AND STANDARDS
   - CALIFORNIA BUILDING CODE (2022 EDITION) SECTION 433-FIXED GUIDEWAY
   - CALIFORNIA FIRE CODE (2022 EDITION)
   - AMERICANS WITH DISABILITIES ACT / ACCESSIBILITY GUIDELINES - AS APPLICABLE CALIFORNIA CODE OF REGULATIONS (CCR)
   - APPLICABLE LOCAL CODES AND STANDARDS
2. OCCUPANCY
   - EXISTING UNDERGROUND STATION BUILDING
3. ELEVATORS
   A. (2) ELEVATORS - 2 STOPS EACH:
      ELEVATOR #3: CONCOURSE LEVEL, PLATFORM LEVEL
      ELEVATOR #30: CONCOURSE LEVEL, MEZZANINE/WALKWAY LEVEL
   B. (2) HOISTWAY FIRE RATING: EXISTING
   C. ELEVATOR MACHINE ROOM WITH 2-HR FIRE RATING
4. EXITING AND EGRESS CAPACITY
   - NEW WORK INDICATED IN THESE DRAWINGS WILL NOT REDUCE THE EMERGENCY EGRESS CAPACITY.

REV.	DATE	BY	SUB	APP.	DESCRIPTION
P	20260518				ISSUED FOR BID

DESIGNED: R. LEE
DRAWN: E. RODRIGUEZ
CHECKED: R. LEE
APPROVED: R. LEE
DATE: 20190918

LICENSED ARCHITECT RAYMOND LEE C 30458 EXP. 9-30-27 STATE OF CALIFORNIA

SAN FRANCISCO BAY AREA RAPID TRANSIT DISTRICT

PGH WONG ENGINEERING, INC. — SUBMITTED

PGH WONG ENGINEERING, INC. — APPROVED

COLISEUM STATION ELEVATOR MODERNIZATION

ABBREVIATIONS, CODE REVIEW, AND SYMBOLS

CADD FILENAME 15NL-140-A001
SIZE: D
SCALE NONE
CONTRACT NO. 15NL-140
REV. P
CONTRACT SHEET NO. A001
PAGE NO. 003

C:\Projects\15NL-140 Coliseum Station Elevator Modernization\2 Working Drawings\A Architectural\1 CADD Files\15NL-140-A001 ABBREVIATIONS & SYMBOLS.dwg Thu, 11 Dec 2025 - 10:05am, Lee, Raymond

STRUCTURAL - SEISMIC DESIGN CRITERIA :

DESIGN OF ELECTRICAL AND MECHANICAL COMPONENTS, EQUIPMENT, UTILITIES, AND RELATED SUPPORTS AND ANCHORAGES ON EXISTING FACILITIES

A. SEISMIC DESIGN SHALL COMPLY WITH THE PROVISIONS OF CBC SECTION 1613, EARTHQUAKE LOADS, AND ASCE/SE17, CHAPTER 13, SEISMIC DESIGN REQUIREMENTS FOR NON-STRUCTURAL COMPONENTS, EXCEPT AS MODIFIED HEREIN.

B. SEISMIC DESIGN SHALL CONSIDER THE RELATIVE MOTIONS BETWEEN THE POINTS OF ATTACHMENT TO THE STRUCTURE. THE SEISMIC DISPLACEMENT IN THE REMOTE MACHINE ROOM SHALL BE PER CBC DRIFT LIMIT.

C. IMPORTANCE FACTOR, IP AS SPECIFIED:

1. ESSENTIAL ELECTRICAL AND MECHANICAL COMPONENTS, EQUIPMENT, UTILITIES, AND RELATED SUPPORTS AND ANCHORAGES SHALL BE DESIGNED USING AN IMPORTANCE FACTOR, IP = 1.5. ESSENTIAL ELECTRICAL AND MECHANICAL COMPONENTS, EQUIPMENT AND UTILITIES ARE DEFINED AS THOSE REQUIRED FOR SAFETY (INCLUDING ESCALATORS, FIRE PROTECTION, VENT FANS, EMERGENCY POWER/LIGHTING, SUMP DISCHARGE PIPING SYSTEM) AND/OR THE OPERATION OF TRAINS (INCLUDING UPS, BATTERIES, INVERTERS, POWER AND CONTROL EQUIPMENT, FARE COLLECTION EQUIPMENT, TRAIN CONTROL EQUIPMENT INCLUDING TRACKSIDE SWITCH MACHINES AND TRACKSIDE DETECTION EQUIPMENT, AND COMMUNICATIONS/TRACTION POWER, AUXILIARY POWER EQUIPMENT) OR THOSE ELECTRICAL AND MECHANICAL COMPONENTS, EQUIPMENT, AND UTILITIES THAT ARE REQUIRED TO BE OPERATIONAL AFTER THE DBE.

2. NON-ESSENTIAL ELECTRICAL AND MECHANICAL COMPONENTS, EQUIPMENT, UTILITIES, AND RELATED SUPPORTS AND ANCHORAGES SHALL BE DESIGNED USING AN IMPORTANCE FACTOR, IP = 1.10. NON-ESSENTIAL ELECTRICAL AND MECHANICAL COMPONENTS, EQUIPMENT AND UTILITIES ARE DEFINED AS THOSE FOR STATION VENTILATION, CATHODIC PROTECTION, ELEVATORS, TOOLS AND MAINTENANCE EQUIPMENT, HOUSEKEEPING, STORAGE EQUIPMENT AND ALL OTHER ELECTRICAL AND MECHANICAL UTILITIES, EQUIPMENT,AND COMPONENTS NOT DEFINED.

GENERAL NOTES:

1. THESE NOTES APPLY TO ALL DRAWINGS AND GOVERN UNLESS MORE SPECIFIC REQUIREMENTS APPLICABLE TO PARTICULAR DIVISIONS OF WORK ARE NOTED, SPECIFIED OR REFERENCED ELSEWHERE IN THE CONTRACT DOCUMENTS. SEE SPECIFICATIONS AND NOTES CONTAINED IN SUBSECTIONS OF THE CONTRACT SPECIFICATIONS.
2. ALL WORK SHALL CONFORM TO ALL APPLICABLE PERMITS, REGULATIONS, CODES, AND ORDINANCES OF PUBLIC AUTHORITIES, FEDERAL, STATE, AND LOCAL HAVING JURISDICTION.
3. DISCREPANCIES WITHIN THE CONTRACT DOCUMENTS SHALL BE BROUGHT TO THE ATTENTION OF THE ENGINEER BEFORE PROCEEDING.
4. UNLESS APPROVED BY THE ENGINEER, STATION UTILITIES, FACILITIES, SIGNAGES, ELEVATORS, ESCALATORS, FIXTURES, DEVICES, EQUIPMENT, EXITS, AND PATHS OF TRAVEL MUST REMAIN OPERATIONAL/FUNCTIONAL DURING REVENUE HOURS. THE CONTRACTOR SHALL NOT INTERRUPT AND ALTER THE EXITS AND PATHS OF TRAVEL, PARTICULARLY, THE ADA FEATURES. TRIPPING HAZARDS TO EXITS AND PATHS OF TRAVEL SHALL BE PROHIBITED. ANY AND ALL PROPOSED MODIFICATIONS TO THE ABOVE SHALL BE SUBMITTED IN THE WORK PLAN/SSWP TO THE ENGINEER AND ARE SUBJECT TO THE ENGINEER'S APPROVAL.
5. ONLY WRITTEN DIMENSIONS ARE USED. DO NOT SCALE DRAWINGS, GRAPHIC SCALE IS USED FOR REFERENCE ONLY .
6. FOR FINISHES, REFER TO FINISH SCHEDULE ON DWG A601.
7. REFERENCE DRAWINGS MUST BE REVIEWED BY THE CONTRACTOR BEFORE BEGINNING ANY DEMOLITION WORK.
8. FOR NOTES ON DEMOLITION, REFER TO A121.
9. CONSTRUCTION LOAD ON EXISTING STATION STRUCTURE IS LIMITED TO 50 PSF FOR MEDIUM DUTY LOAD.
10. PROVIDE A 36'x10' TRAILER FOR CONTRAACTOR'S OFFICE. CONTRACTOR SHALL NOTIFY THE ENGINEER PRIOR TO USE. SEE REFERENCE DRAWING R003, PATRON PARKING WEST FOR LOCATION.

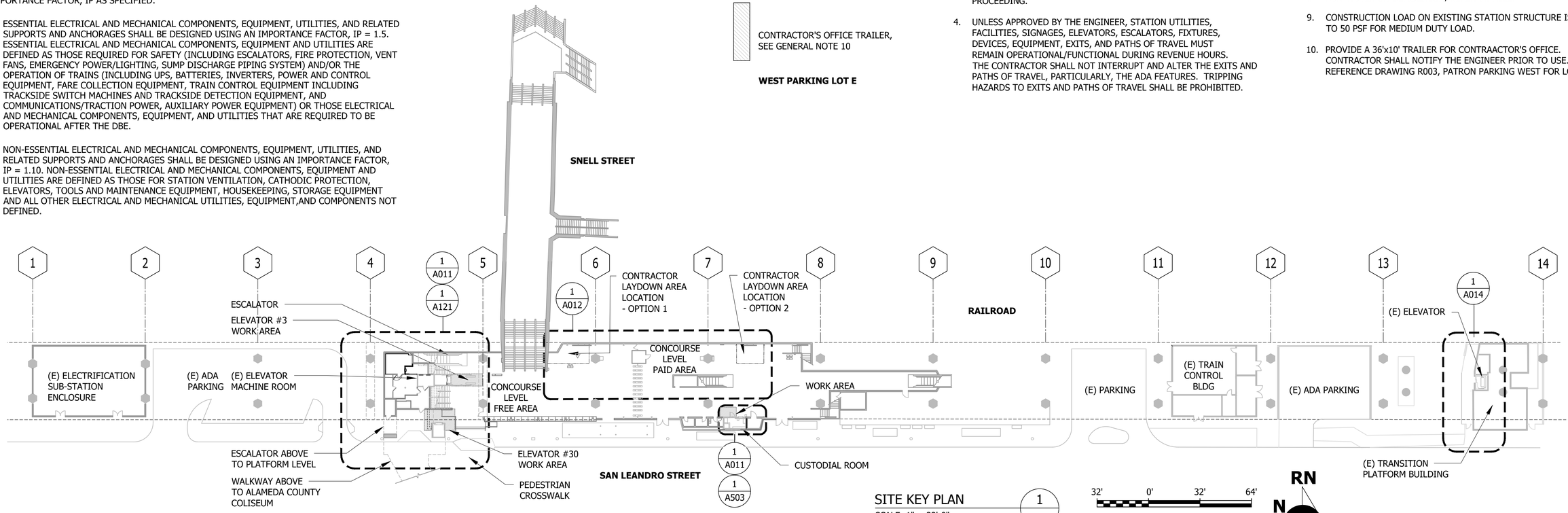

SITE KEY PLAN 1 --
SCALE: 1" = 32'-0"

32' 0' 32' 64'
GRAPHIC SCALE

RN
N

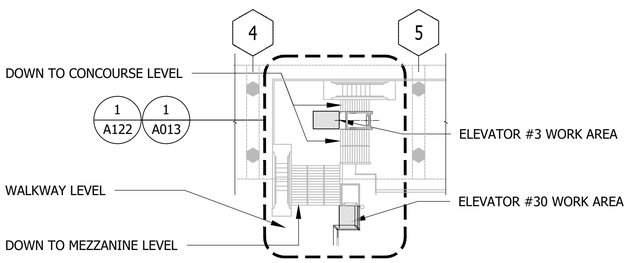

PARTIAL MEZZANINE AND WALKWAY LEVEL 2 --
SCALE: 1" = 32'-0"

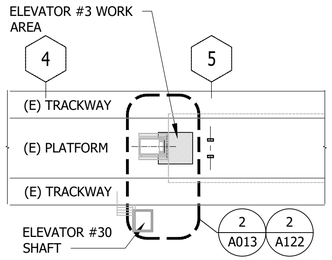

PARTIAL PLATFORM LEVEL 3 --
SCALE: 1" = 32'-0"

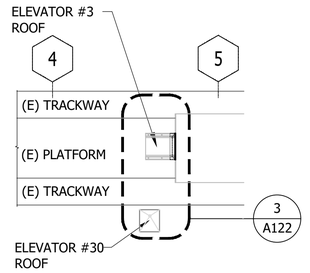

PARTIAL ROOF PLAN 4 --
SCALE: 1" = 32'-0"

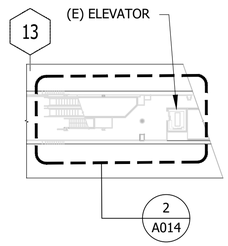

PARTIAL PLATFORM FLOOR PLAN 5 --
SCALE: 1" = 32'-0"

REV.	DATE	BY	SUB	APP.	DESCRIPTION
P	20260518				ISSUED FOR BID

DESIGNED: R. LEE
DRAWN: E. RODRIGUEZ
CHECKED: R. LEE
APPROVED: R. LEE
DATE: 20190918

LICENSED ARCHITECT RAYMOND LEE C 30458 EXP. 9-30-27 STATE OF CALIFORNIA

SAN FRANCISCO BAY AREA RAPID TRANSIT DISTRICT

PGH WONG ENGINEERING, INC. — SUBMITTED

PGH WONG ENGINEERING, INC. — APPROVED

COLISEUM STATION ELEVATOR MODERNIZATION

SITE KEY PLAN, PARTIAL PLANS, AND GENERAL NOTES

CADD FILENAME: 15NL-140-A010
SIZE: D | SCALE: 1" = 32' -0"
CONTRACT NO.: 15NL-140 | REV.: P
CONTRACT SHEET NO.: A010 | PAGE NO.: 004

Plotted: 5/18/2026 7:00 PM By: Richard Rodriguez File Name: C:\Users\rrodriguez\Desktop\15 A Working Drawings\15 A Working Drawings\15NL-140-A010 SITE KEY PLAN, PARTIAL PLANS, AND GENERAL NOTES.dwg

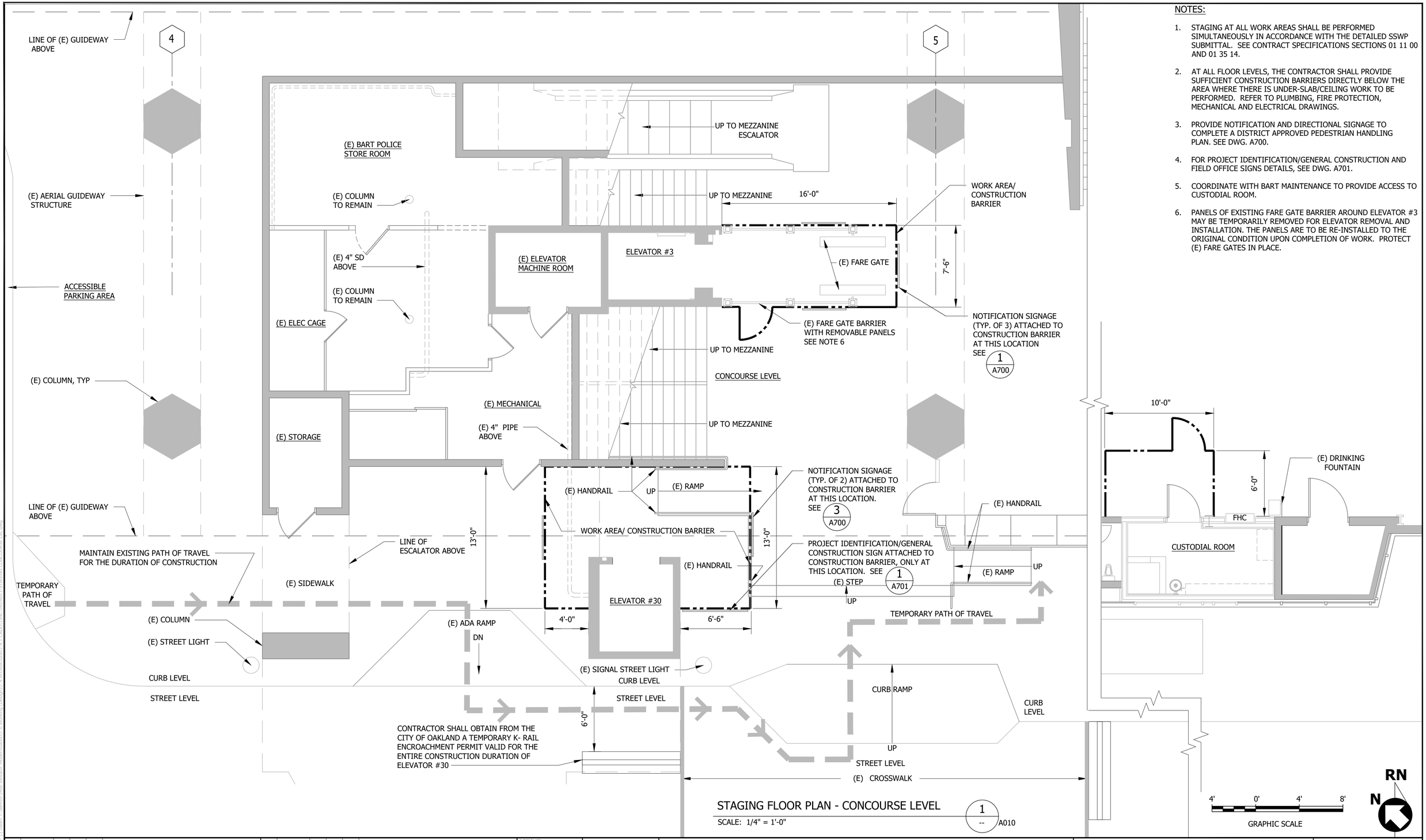

STAGING FLOOR PLAN - CONCOURSE LEVEL (1/--/A010)

SCALE: 1/4" = 1'-0"

NOTES:

1. STAGING AT ALL WORK AREAS SHALL BE PERFORMED SIMULTANEOUSLY IN ACCORDANCE WITH THE DETAILED SSWP SUBMITTAL. SEE CONTRACT SPECIFICATIONS SECTIONS 01 11 00 AND 01 35 14.
2. AT ALL FLOOR LEVELS, THE CONTRACTOR SHALL PROVIDE SUFFICIENT CONSTRUCTION BARRIERS DIRECTLY BELOW THE AREA WHERE THERE IS UNDER-SLAB/CEILING WORK TO BE PERFORMED. REFER TO PLUMBING, FIRE PROTECTION, MECHANICAL AND ELECTRICAL DRAWINGS.
3. PROVIDE NOTIFICATION AND DIRECTIONAL SIGNAGE TO COMPLETE A DISTRICT APPROVED PEDESTRIAN HANDLING PLAN. SEE DWG. A700.
4. FOR PROJECT IDENTIFICATION/GENERAL CONSTRUCTION AND FIELD OFFICE SIGNS DETAILS, SEE DWG. A701.
5. COORDINATE WITH BART MAINTENANCE TO PROVIDE ACCESS TO CUSTODIAL ROOM.
6. PANELS OF EXISTING FARE GATE BARRIER AROUND ELEVATOR #3 MAY BE TEMPORARILY REMOVED FOR ELEVATOR REMOVAL AND INSTALLATION. THE PANELS ARE TO BE RE-INSTALLED TO THE ORIGINAL CONDITION UPON COMPLETION OF WORK. PROTECT (E) FARE GATES IN PLACE.

REV.	DATE	BY	SUB	APP.	DESCRIPTION
P	20260518				ISSUED FOR BID

DESIGNED: R. LEE
DRAWN: E. RODRIGUEZ
CHECKED: R. LEE
APPROVED: R. LEE
DATE: 20190918

LICENSED ARCHITECT RAYMOND LEE C 30458 EXP. 9-30-27 STATE OF CALIFORNIA

SAN FRANCISCO BAY AREA RAPID TRANSIT DISTRICT

PGH WONG ENGINEERING, INC. — SUBMITTED

PGH WONG ENGINEERING, INC. — APPROVED

COLISEUM STATION ELEVATOR MODERNIZATION

STAGING FLOOR PLAN - CONCOURSE LEVEL

CADD FILENAME: 15NL-140-A011
SIZE: D | SCALE: 1/4" = 1'-0"
CONTRACT NO.: 15NL-140 | REV.: P
CONTRACT SHEET NO.: A011 | PAGE NO.: 005

Plotted: May 06, 2026 - 11:08am | D:\Users\rlee\BIM\15-140 Coliseum - Replacement\A-11 Working Drawings\A-11 CONSTRUCTION - 100%\A11 STAGING CONCOURSE LVL.dwg

NOTES:

1. STAGING AT ALL WORK AREAS SHALL BE PERFORMED SIMULTANEOUSLY IN ACCORDANCE WITH THE DETAILED SSWP SUBMITTAL. SEE CONTRACT SPECIFICATIONS SECTIONS 01 11 00 AND 01 35 14.
2. AT ALL FLOOR LEVELS, THE CONTRACTOR SHALL PROVIDE SUFFICIENT CONSTRUCTION BARRIERS DIRECTLY BELOW THE AREA WHERE THERE IS UNDER-SLAB/CEILING WORK TO BE PERFORMED. REFER TO PLUMBING, FIRE PROTECTION, MECHANICAL AND ELECTRICAL DRAWINGS.
3. PROVIDE THE NECESSARY AMOUNT OF NOTIFICATION AND DIRECTIONAL SIGNAGE TO COMPLETE A DISTRICT APPROVED PEDESTRIAN HANDLING PLAN.
4. THE OPTION 1 CONTRACTOR LAYDOWN AREA IS THE PREFERRED LOCATION. THE ACTUAL LAYDOWN AREA SHALL BE SUBMITTED TO BART FOR REVIEW THROUGH THE SSWP PROCESS.

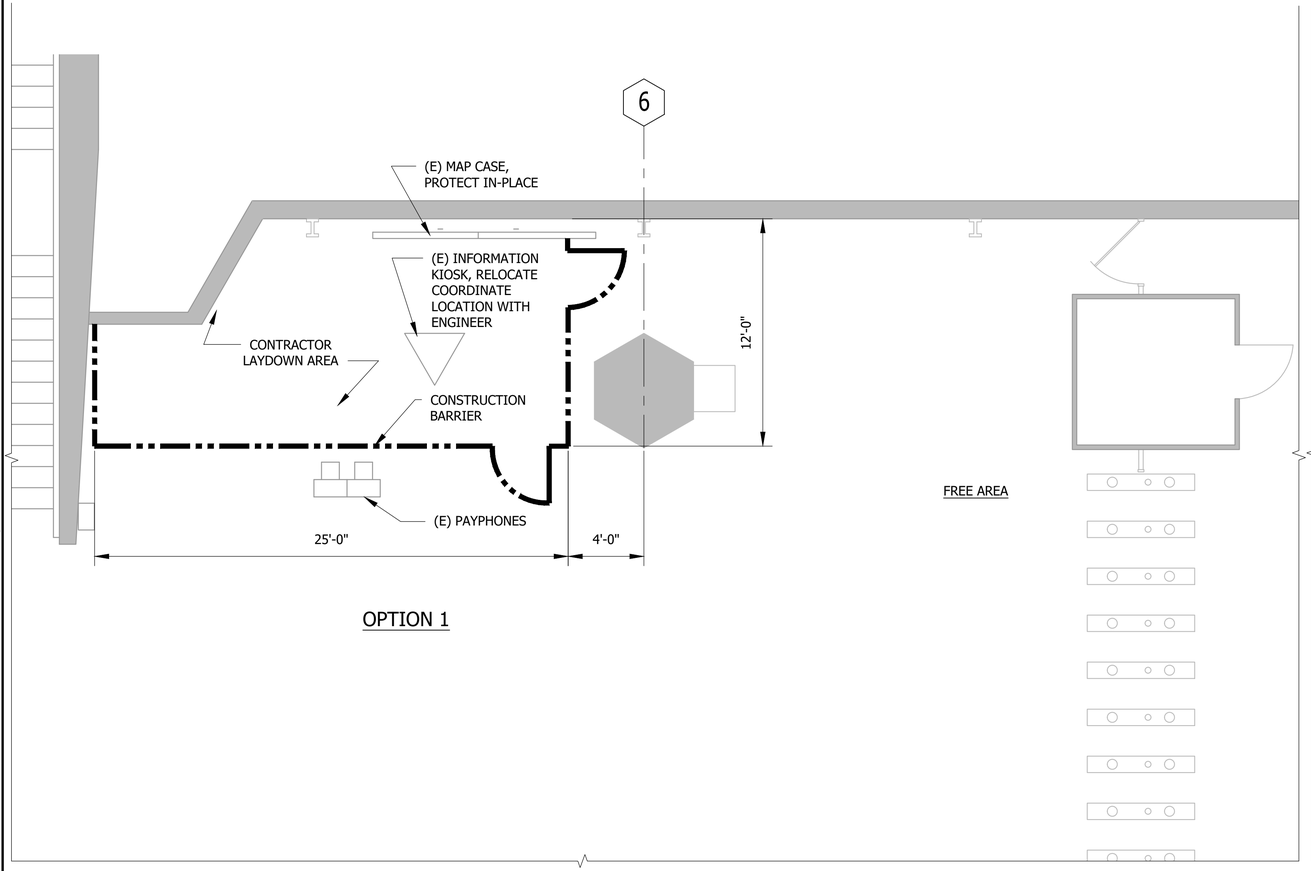

OPTION 1

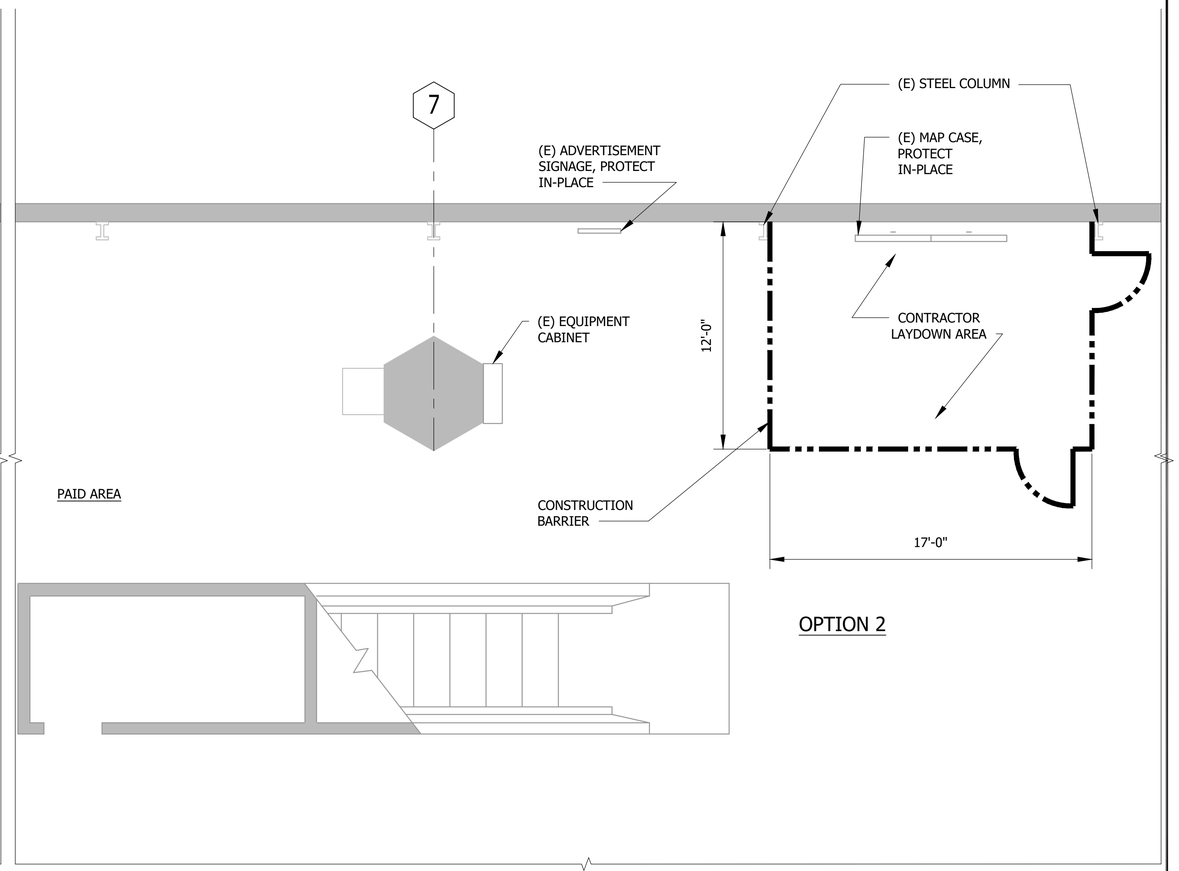

OPTION 2

CONTRACTOR LAYDOWN AREA LOCATION PLAN-CONCOURSE LEVEL

SCALE: 1/4" = 1'-0"

1 / -- A010

GRAPHIC SCALE 4' 0' 4' 8'

RN N

REV.	DATE	BY	SUB	APP.	DESCRIPTION
P	20260518				ISSUED FOR BID

DESIGNED: R. LEE
DRAWN: E. RODRIGUEZ
CHECKED: R. LEE
APPROVED: R. LEE
DATE: 20190918

LICENSED ARCHITECT RAYMOND LEE C 30458 EXP. 9-30-21 STATE OF CALIFORNIA

SAN FRANCISCO BAY AREA RAPID TRANSIT DISTRICT

PGH WONG ENGINEERING, INC. — SUBMITTED

PGH WONG ENGINEERING, INC. — APPROVED

COLISEUM STATION ELEVATOR MODERNIZATION

CONTRACTOR LAYDOWN AREA LOCATION PLAN CONCOURSE LEVEL

CADD FILENAME: 15NL-140-A012
SIZE: D
SCALE: 1/4"=1'-0"
CONTRACT NO.: 15NL-140
REV.: P
CONTRACT SHEET NO.: A012
PAGE NO.: 006

Plotted: Nov 05, 2020 - 11:08am By: Emelyn Rodriguez P:\Drawings\15NL-140\Drawings\15NL-140-A012 CONTRACTOR LAYDOWN AREA CONCOURSE LEVEL.dwg

NOTES:

1. STAGING AT ALL WORK AREAS SHALL BE PERFORMED SIMULTANEOUSLY IN ACCORDANCE WITH THE DETAILED SSWP SUBMITTAL. SEE CONTRACT SPECIFICATIONS SECTIONS 01 11 00 AND 01 35 14.
2. AT ALL FLOOR LEVELS, THE CONTRACTOR SHALL PROVIDE SUFFICIENT CONSTRUCTION BARRIERS DIRECTLY BELOW THE AREA WHERE THERE IS UNDER-SLAB/CEILING WORK TO BE PERFORMED. REFER TO PLUMBING, FIRE PROTECTION, MECHANICAL AND ELECTRICAL DRAWINGS.
3. PROVIDE NOTIFICATION AND DIRECTIONAL SIGNAGE TO COMPLETE A DISTRICT APPROVED PEDESTRIAN HANDLING PLAN.

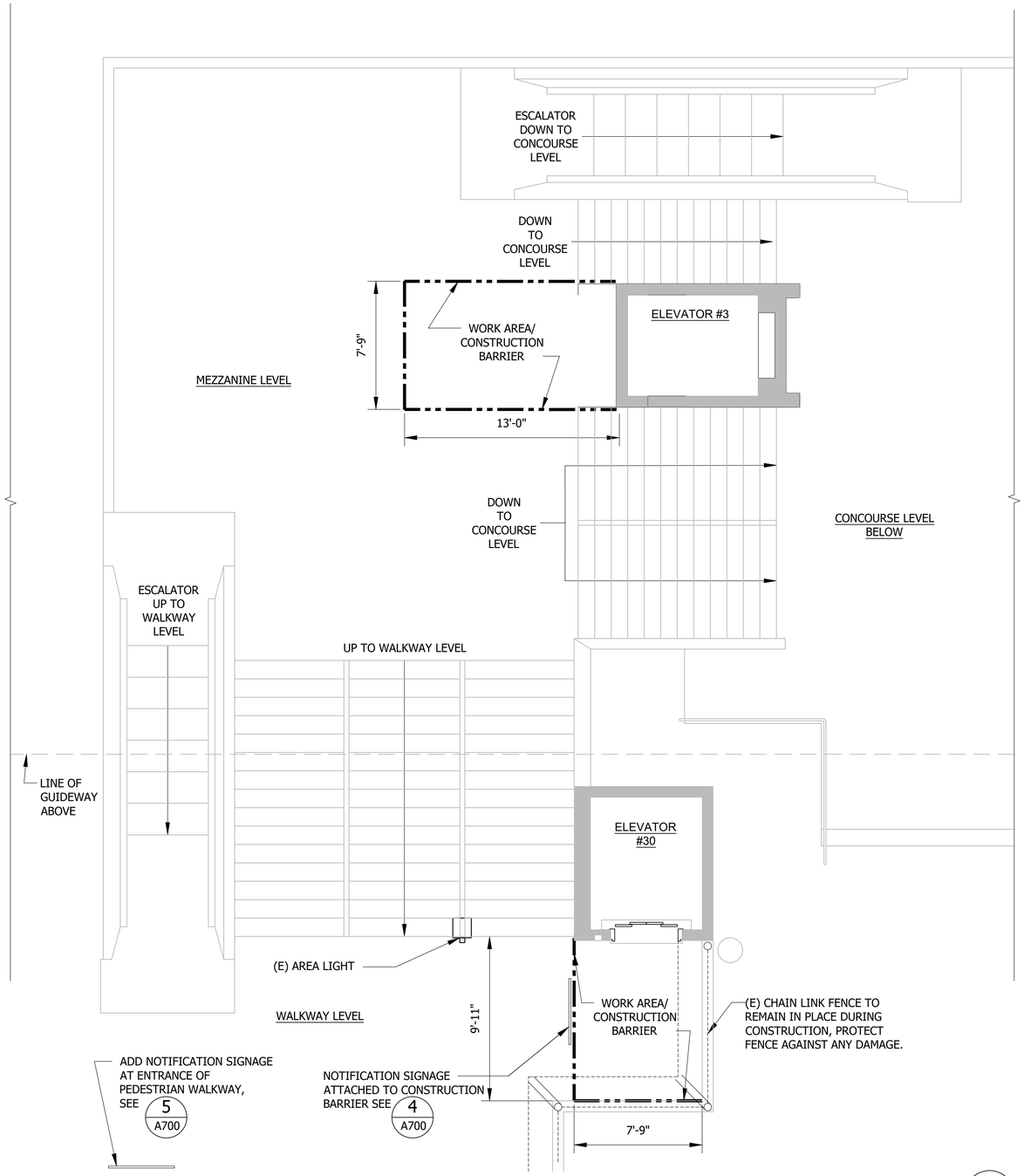

STAGING FLOOR PLAN-MEZZANINE LEVEL 1 -- A010
SCALE: 1/4" = 1'-0"

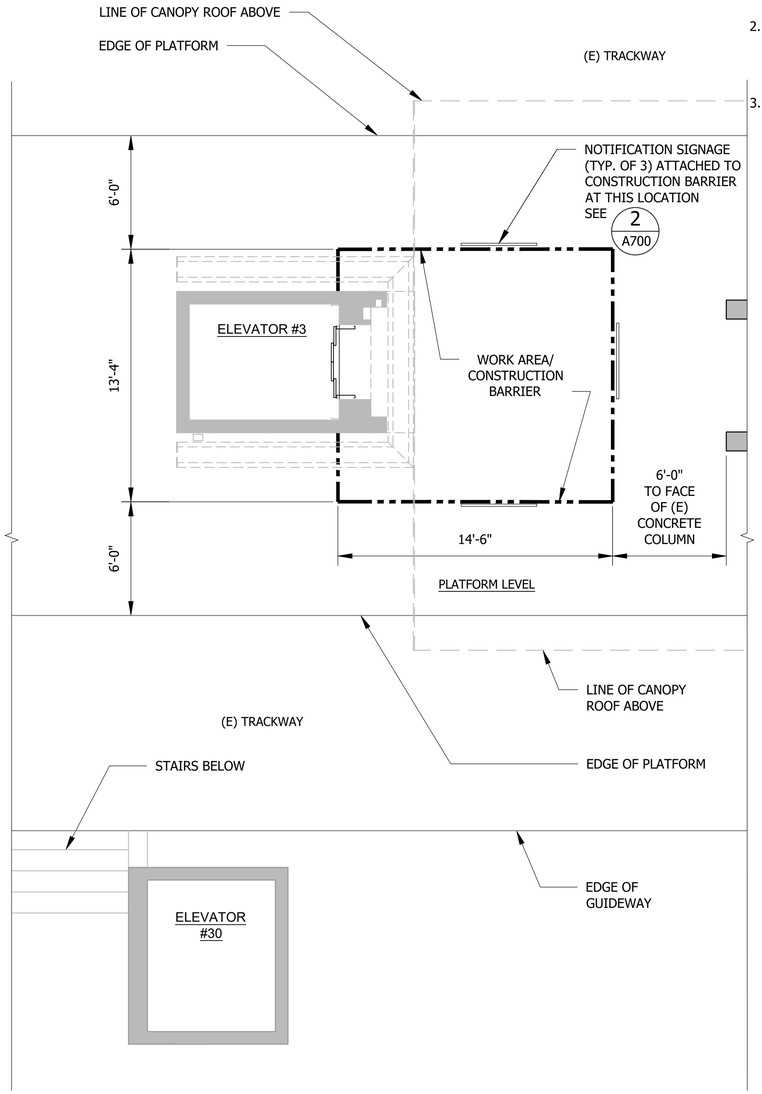

STAGING FLOOR PLAN-PLATFORM LEVEL 2 -- A010
SCALE: 1/4" = 1'-0"

4' 0' 4' 8'
GRAPHIC SCALE

RN
N

REV.	DATE	BY	SUB	APP.	DESCRIPTION
P	20260518				ISSUED FOR BID

DESIGNED: R. LEE
DRAWN: E. RODRIGUEZ
CHECKED: R. LEE
APPROVED: R. LEE
DATE: 20190918

LICENSED ARCHITECT RAYMOND LEE C 30458 EXP. 9-30-27 STATE OF CALIFORNIA

SAN FRANCISCO BAY AREA RAPID TRANSIT DISTRICT

PGH WONG ENGINEERING, INC. — SUBMITTED

PGH WONG ENGINEERING, INC. — APPROVED

COLISEUM STATION ELEVATOR MODERNIZATION

STAGING FLOOR PLAN
MEZZANINE, WALKWAY AND PLATFORM LEVEL

CADD FILENAME: 15NL-140-A013
SIZE: D | SCALE: 1/4"=1'-0"
CONTRACT NO.: 15NL-140 | REV.: P
CONTRACT SHEET NO.: A013 | PAGE NO.: 007

Plotted: May 18, 2026 - 11:13am | D:\Users\rlee\1400 Drawings\Documents\01 Drawings\Design\01 A Architectural\A-1 Coliseum\15NL-140-A013 STAGING FLOOR PLAN.dwg

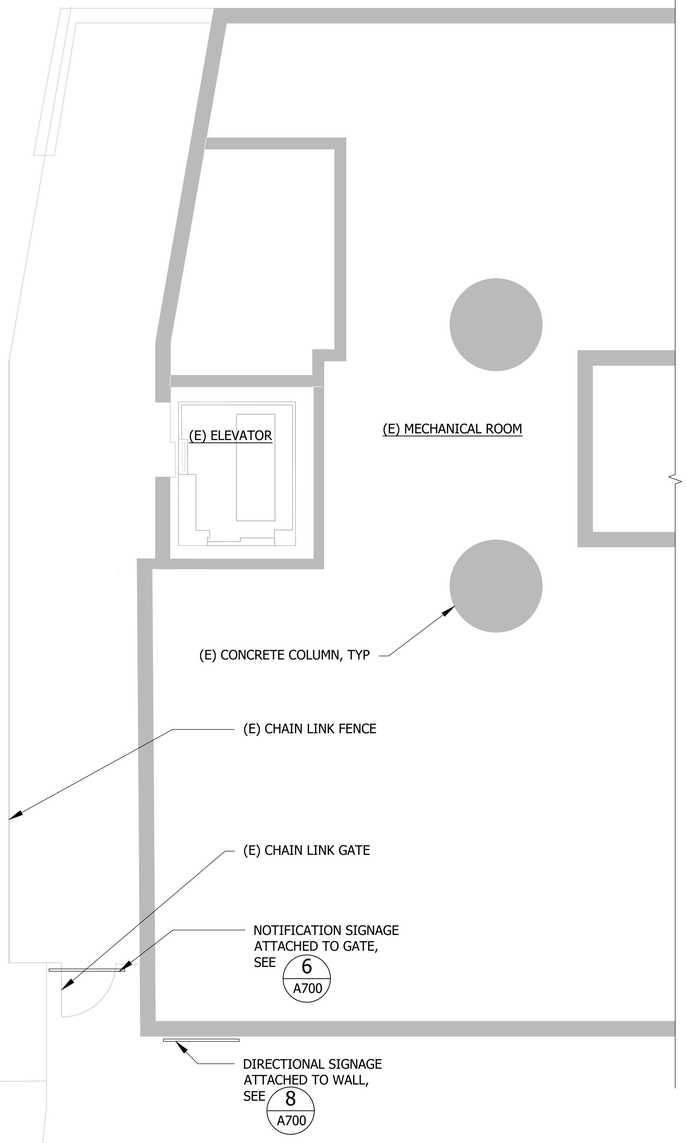

STAGING PLAN-CONCOURSE LEVEL 1 -- A010
SCALE: 1/4" = 1'-0"

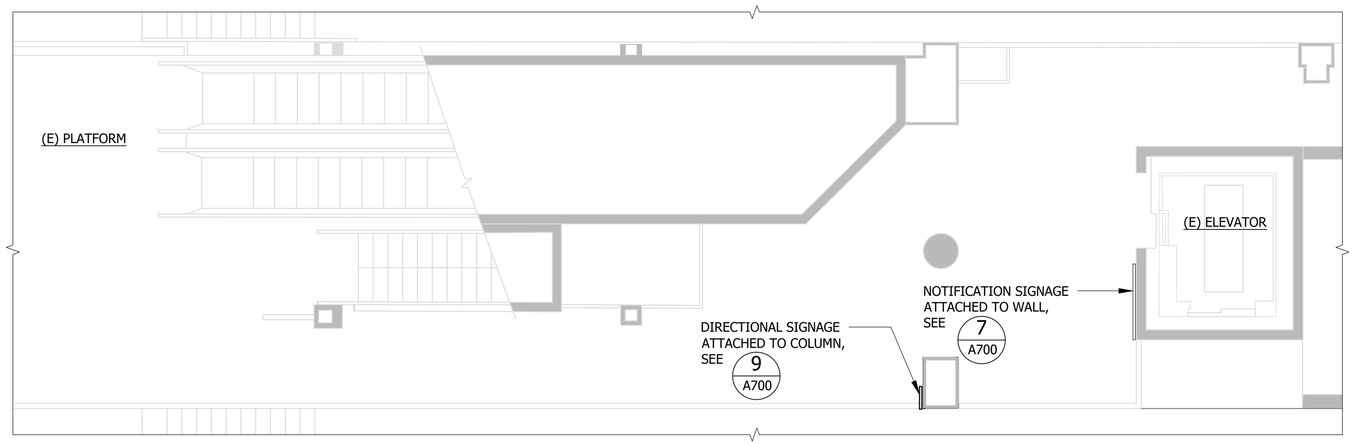

STAGING FLOOR PLAN-PLATFORM PLAN 2 -- A010
SCALE: 1/4" = 1'-0"

NOTE:

1. CONTRACTOR SHALL OBTAIN FROM THE CITY OF OAKLAND A TEMPORARY STREET ENCROACHMENT PERMIT FOR LOADING AND UNLOADING PASSENGERS FOR THE ENTIRE DURATION OF PARATRANSIT SERVICE

32' 0' 32' 64'
GRAPHIC SCALE

RN
N

REV.	DATE	BY	SUB	APP.	DESCRIPTION
P	20260518				ISSUED FOR BID

DESIGNED: R. LEE
DRAWN: E. RODRIGUEZ
CHECKED: R. LEE
APPROVED: R. LEE
DATE: 20190918

LICENSED ARCHITECT RAYMOND LEE C 30458 EXP. 9-30-27 STATE OF CALIFORNIA

SAN FRANCISCO BAY AREA RAPID TRANSIT DISTRICT

PGH WONG ENGINEERING, INC. — SUBMITTED
PGH WONG ENGINEERING, INC. — APPROVED

COLISEUM STATION ELEVATOR MODERNIZATION

STAGING FLOOR PLANS

CADD FILENAME: 15NL-140-A014
SIZE: D | SCALE: 1" = 4' -0"
CONTRACT NO.: **15NL-140** | REV.: **P**
CONTRACT SHEET NO.: **A014** | PAGE NO.: **008**

Plotted: 05/18/26 11:05 By: RLee
I:\Work_Up\15NL\100 Design Modification\10 Working Drawings\A Architectural\A_CADD Files\A014 STAGING FLOOR PLANS.dwg

LEGEND:

2-HR FIRE RATED WALL

(E) CONCRETE WALL

(E) WALL

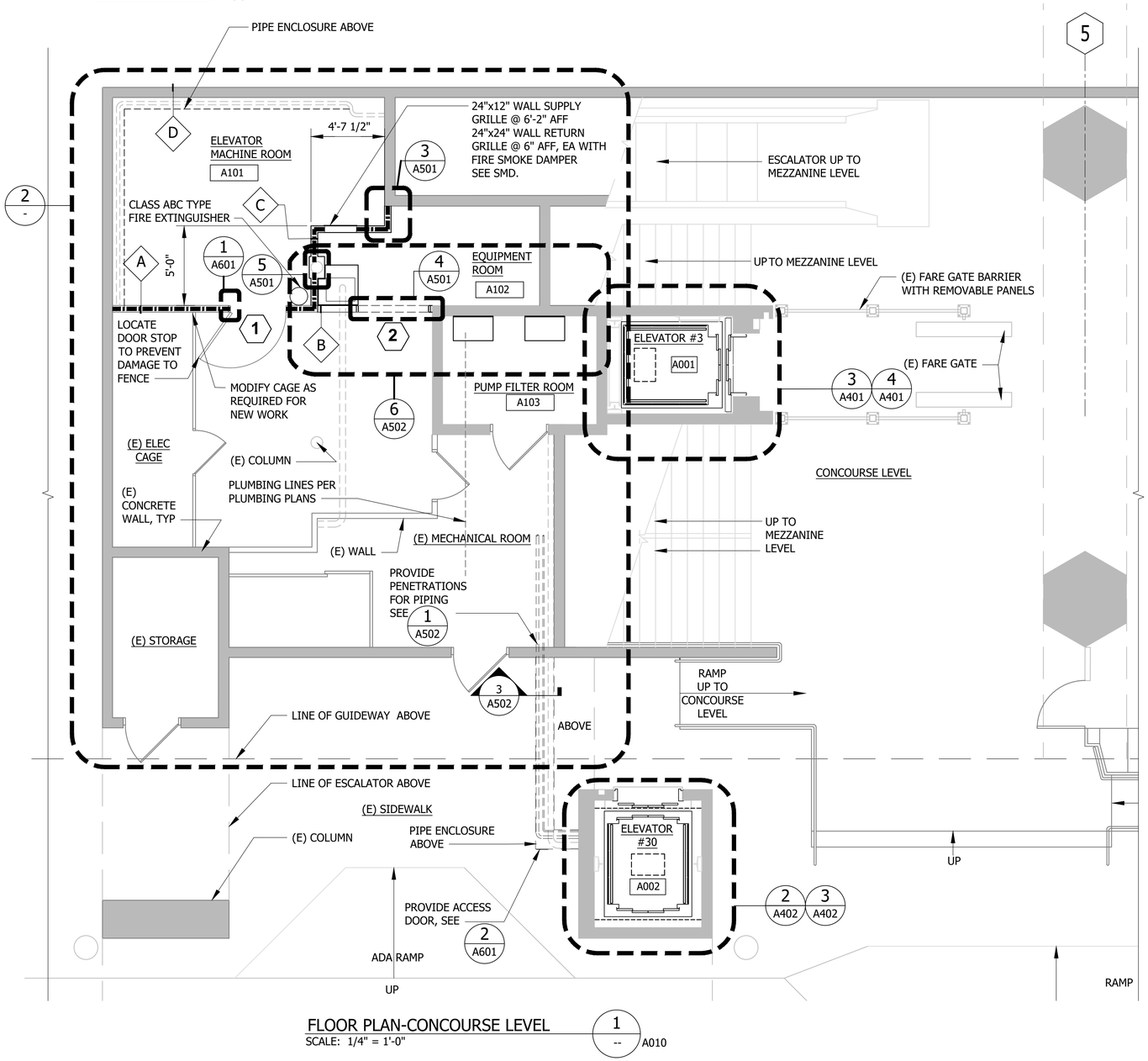

FLOOR PLAN-CONCOURSE LEVEL 1/-- A010
SCALE: 1/4" = 1'-0"

NOTES:

1. SEE DETAIL 2/A501 FOR WALL TYPES.

DEMOLITION NOTES:

1. CONTRACTOR SHALL NOTIFY THE ENGINEER IMMEDIATELY OF ALL UTILITIES DETERMINED IN COURSE OF CONSTRUCTION AS BEING NECESSARY TO BE REMOVED WHICH HAVE NOT OTHERWISE BEEN NOTED FOR REMOVAL IN THE CONSTRUCTION DOCUMENTS. CONTRACTOR SHALL REMOVE SUCH UTILITIES ONLY AFTER CONSULTATION WITH THE ENGINEER, WHETHER PREDETERMINED IN THE CONSTRUCTION DOCUMENTS OR DETERMINED LATER IN THE FIELD. DISCONNECT, CUT BACK TO SOURCE, AND CAP ALL UTILITY SERVICES REMOVED. SEAL ALL PENETRATIONS CREATED BY REMOVAL OF UTILITIES TO MATCH ADJACENT STRUCTURE AND FINISHES.
2. SEE ELECTRICAL, MECHANICAL AND ELEVATOR DRAWINGS FOR FURTHER GENERAL DEMOLITION RELATED REQUIREMENTS AND REMOVAL OF EQUIPMENT. COORDINATE ALL WORK WITH OWNER'S REPRESENTATIVE, AND ALL DISCIPLINES.

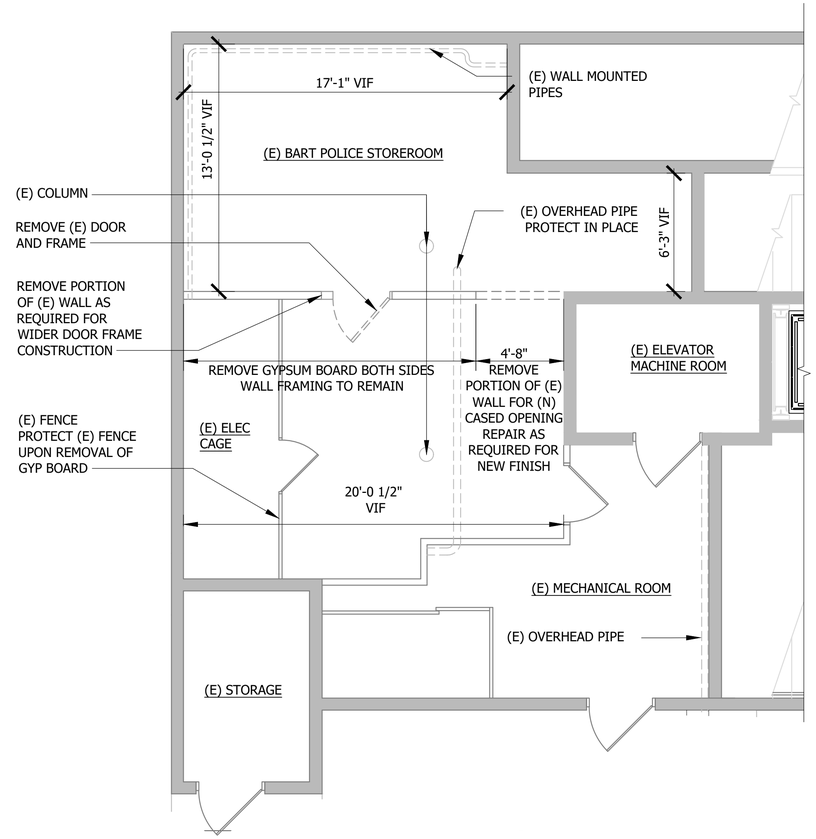

PARTIAL DEMOLITION PLAN 2/--
SCALE: 1/4" = 1'-0"

4' 0' 4' 8'
GRAPHIC SCALE

RN
N

REV.	DATE	BY	SUB	APP.	DESCRIPTION
P	20260518				ISSUED FOR BID

DESIGNED: R. LEE
DRAWN: E. RODRIGUEZ
CHECKED: R. LEE
APPROVED: R. LEE
DATE: 20190918

LICENSED ARCHITECT RAYMOND LEE C 30458 EXP. 9-30-21 STATE OF CALIFORNIA

SAN FRANCISCO BAY AREA RAPID TRANSIT DISTRICT

PGH WONG ENGINEERING, INC. — SUBMITTED

PGH WONG ENGINEERING, INC. — APPROVED

COLISEUM STATION ELEVATOR MODERNIZATION

PARTIAL FLOOR AND DEMOLITION PLANS
CONCOURSE LEVEL

CADD FILENAME: 15NL-140-A121
SIZE: D | SCALE: 1/4"=1'-0"
CONTRACT NO.: 15NL-140 | REV.: P
CONTRACT SHEET NO.: A121 | PAGE NO.: 009

Plotted: May 05, 2026 - 1:08pm | J:\Projects\15NL-140 Elevator Modernization\2_Working\Drawings\A_Architectural\A_Concourse\15NL-140-A121_CONCOURSE LVL.dwg

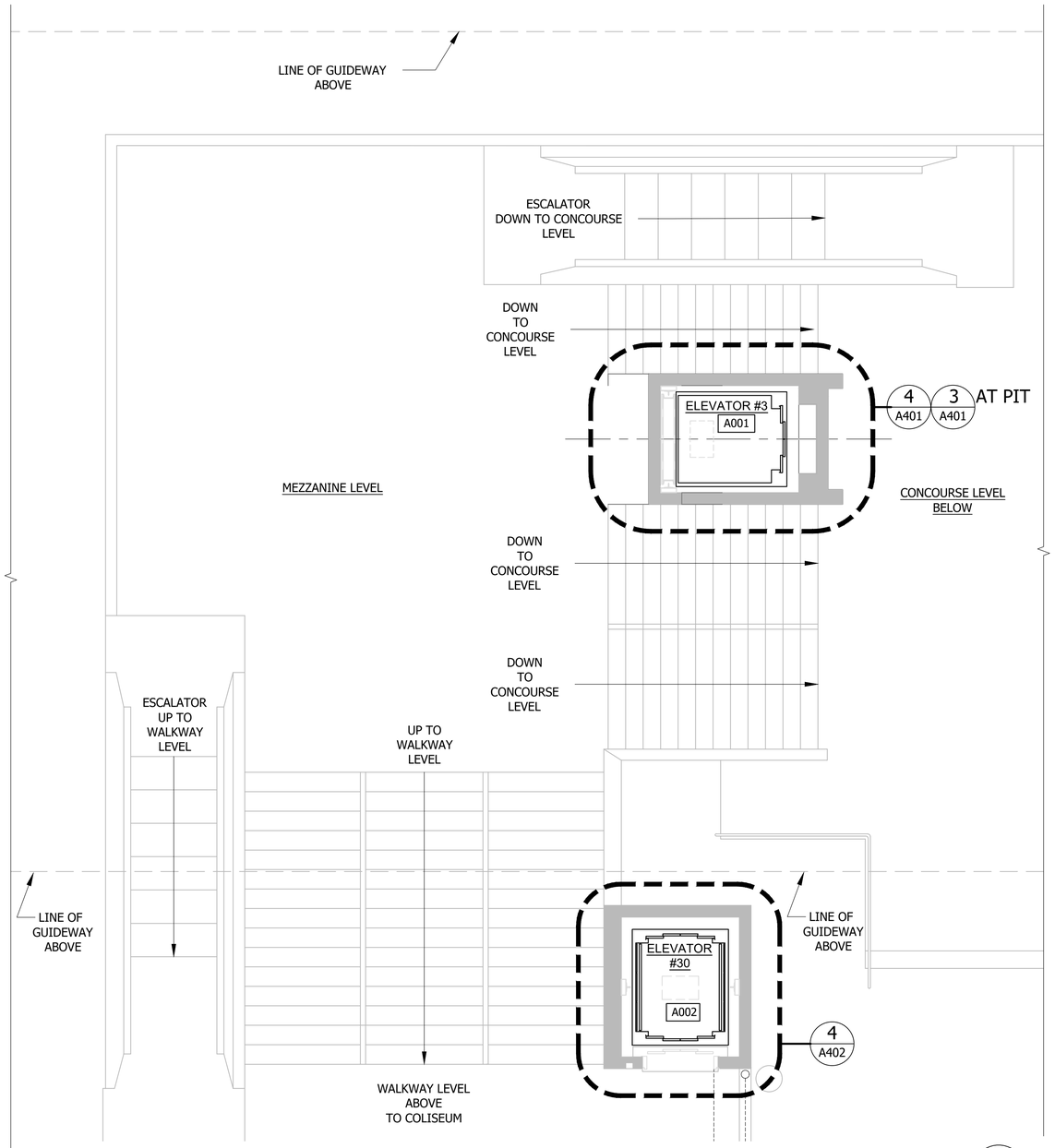

PARTIAL FLOOR PLAN-MEZZANINE/WALKWAY LEVEL 1 -- A010

SCALE: 1/4" = 1'-0"

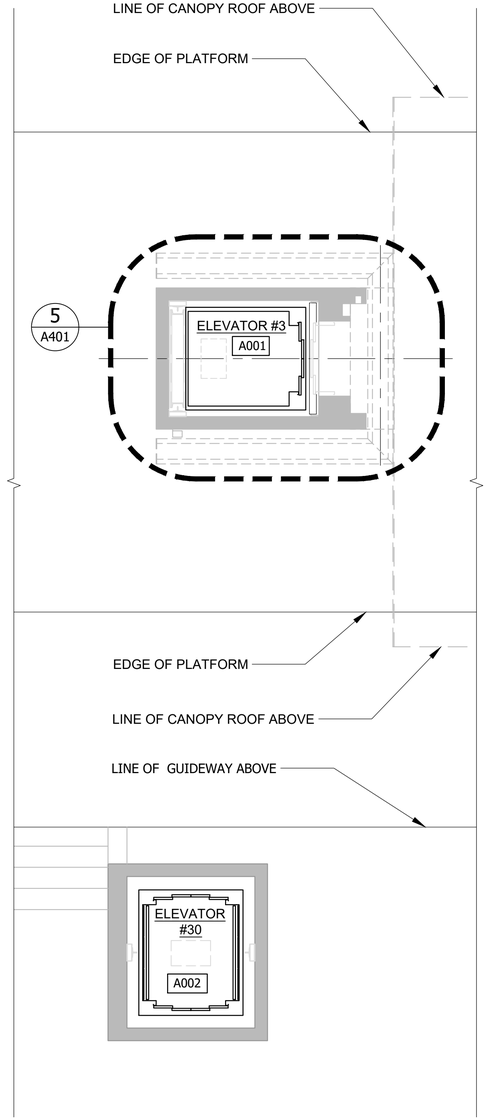

PARTIAL FLOOR PLAN - PLATFORM LEVEL 2 -- A010

SCALE: 1/4" = 1'-0"

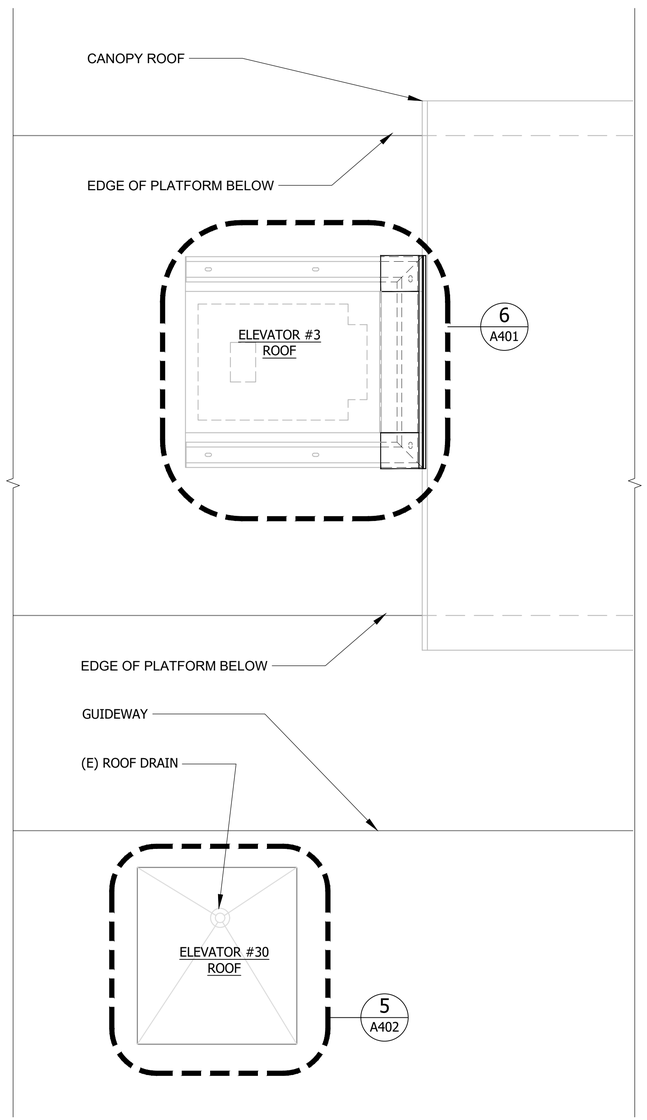

PARTIAL ROOF PLAN 3 -- A010

SCALE: 1/4" = 1'-0"

4' 0' 4' 8'

GRAPHIC SCALE

RN

N

REV.	DATE	BY	SUB	APP.	DESCRIPTION
P	20260518				ISSUED FOR BID

DESIGNED: R. LEE
DRAWN: E. RODRIGUEZ
CHECKED: R. LEE
APPROVED: R. LEE
DATE: 20190918

LICENSED ARCHITECT RAYMOND LEE C 30458 EXP. 9-30-27 STATE OF CALIFORNIA

SAN FRANCISCO BAY AREA RAPID TRANSIT DISTRICT

PGH WONG ENGINEERING, INC. — SUBMITTED

PGH WONG ENGINEERING, INC. — APPROVED

COLISEUM STATION ELEVATOR MODERNIZATION

PARTIAL FLOOR AND ROOF PLANS
MEZZANINE AND PLATFORM LEVEL

CADD FILENAME: 15NL-140-A122
SIZE: D | SCALE: 1/4"=1'-0"
CONTRACT NO.: **15NL-140** | REV.: **P**
CONTRACT SHEET NO.: **A122** | PAGE NO.: **010**

Plotted: 05/18/2026 14:03 | Drawing: P:\Projects\15NL Elevator Modernization\A Working\Design\A E Coliseum\15NL_140_A122_PARTIAL ROOF & MEZZANINE PLAN.dwg

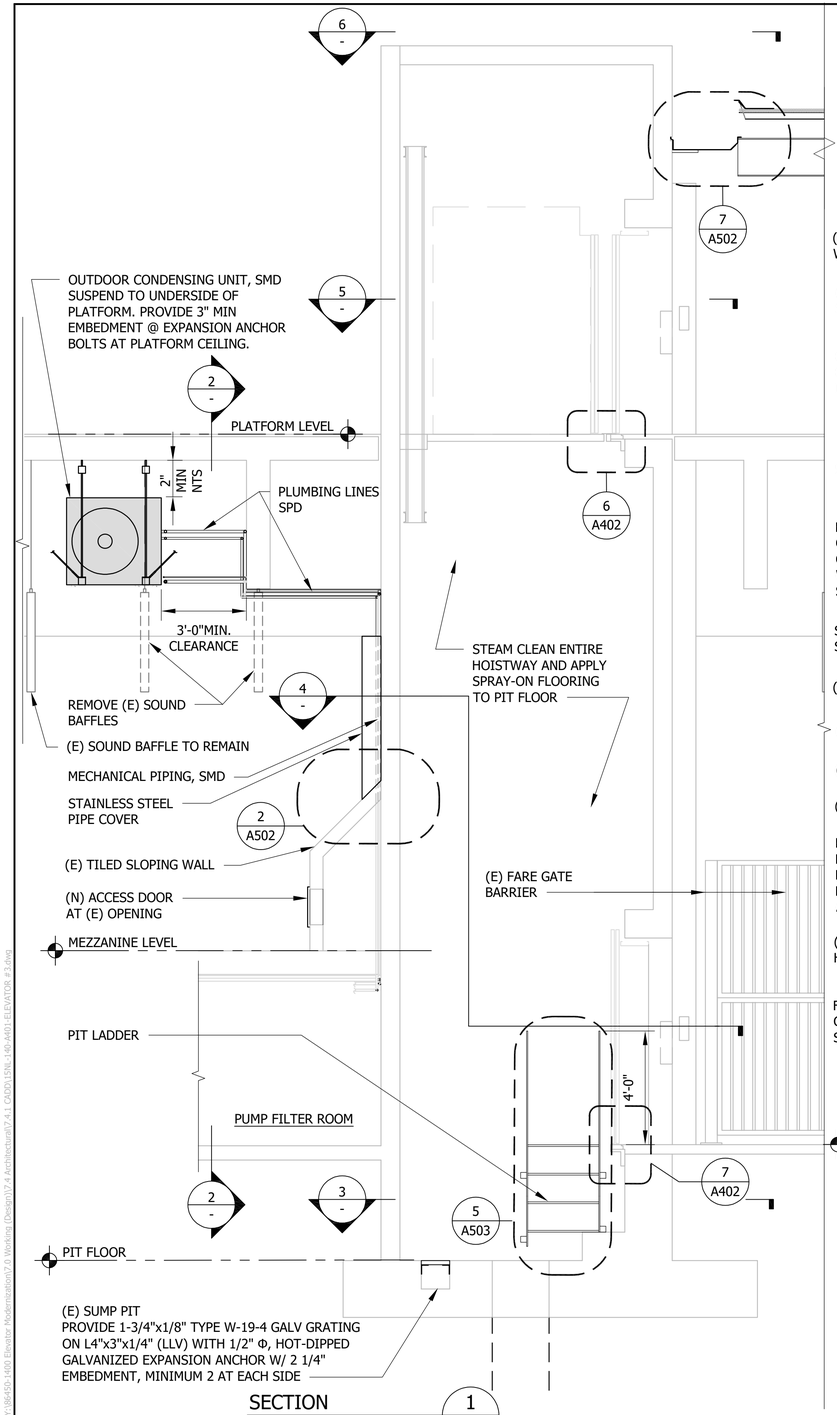

SECTION 1 / A401
SCALE: 3/8" = 1'-0"

GENERAL NOTES:

1. SEE SHEET - / MS32 FOR PIPING SUPPORT AND BRACING DETAILS.

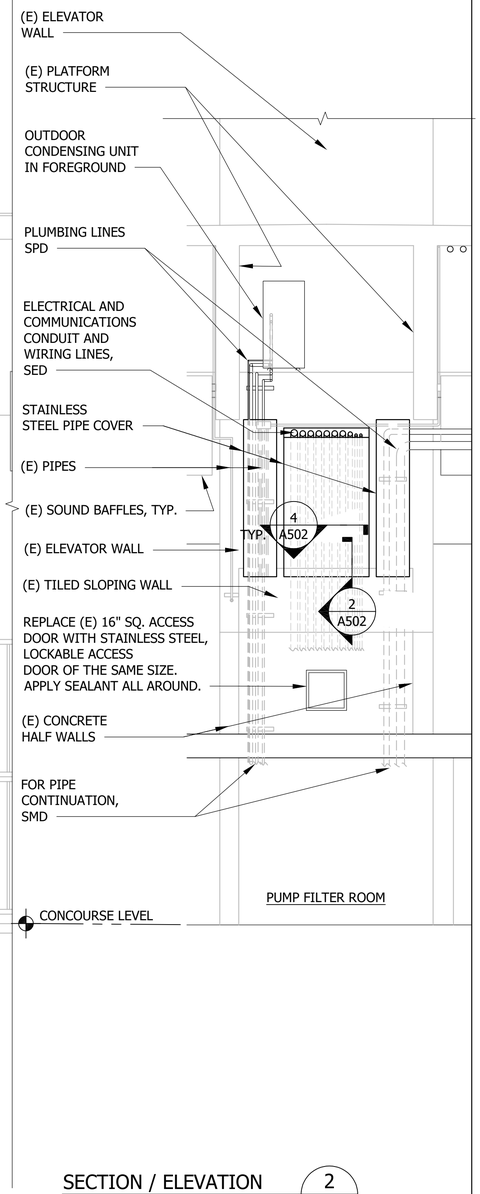

SECTION / ELEVATION 2 / A401
SCALE: 3/8" = 1'-0"

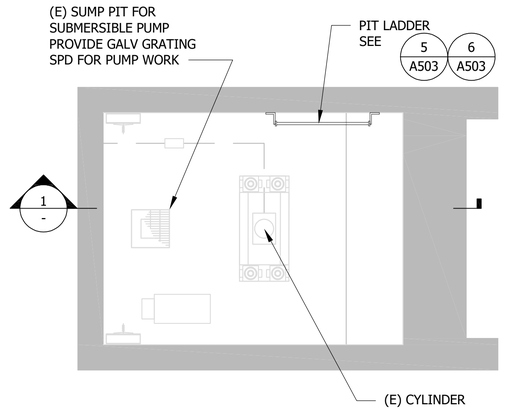

PLAN AT PIT 3 / A401 A121
SCALE: 1/2" = 1'-0"

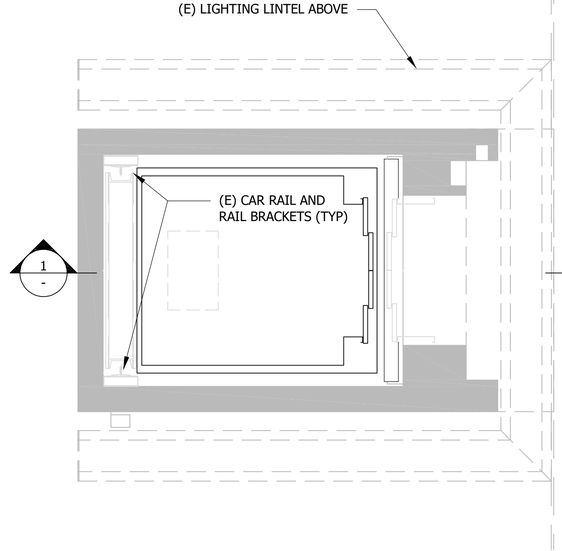

PLAN AT PLATFORM LEVEL 5 / A401 A122
SCALE: 1/2" = 1'-0"

ELEVATOR GENERAL NOTES:

1. APPLY CONCRETE WATERPROOFING PENETRATING SEALER ALL AROUND THE ENTIRE EXTERIOR CONCRETE FACE OF SHAFT WALL .
2. SEE ELEVATOR DRAWINGS FOR WORK AT ELEVATOR HOISTWAY, TYP
3. SEAL AROUND ANY PENETRATIONS INTO SHAFT WALLS WITH 2-HOUR FIRE RATING, SEE 1 / A502
4. SEE - / A403 FOR ELEVATOR CAB FINISH MATERIAL.

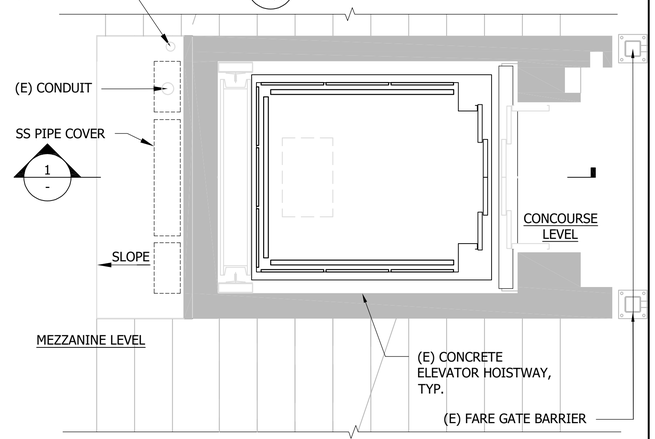

PLAN AT MEZZANINE/CONCOURSE LEVEL 4 / A401 A121 A122
SCALE: 1/2" = 1'-0"

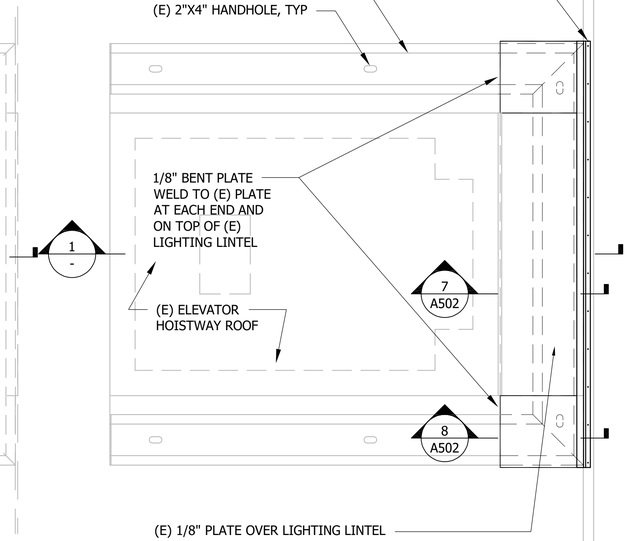

RN ROOF PLAN 6 / A401 A122
SCALE: 1/2" = 1'-0"

N

0 1' 2' 3' 4' 5' 10'
GRAPHIC SCALE

REV.	DATE	BY	SUB	APP.	DESCRIPTION
P	20260518				ISSUED FOR BID

DESIGNED: R. LEE
DRAWN: E. RODRIGUEZ
CHECKED: R. LEE
APPROVED: R. LEE
DATE:

LICENSED ARCHITECT RAYMOND LEE C 30458 EXP. 9-30-27 STATE OF CALIFORNIA

SAN FRANCISCO BAY AREA RAPID TRANSIT DISTRICT

PGH WONG ENGINEERING, INC. — SUBMITTED

PGH WONG ENGINEERING, INC. — APPROVED

COLISEUM STATION ELEVATOR MODERNIZATION

PLANS AND SECTIONS/ELEVATION
ELEVATOR #3

CADD FILENAME: 15NL-140-A401
SIZE: D | SCALE: AS SHOWN
CONTRACT NO.: **15NL-140** | REV.: **P**
CONTRACT SHEET NO.: **A401** | PAGE NO.: **011**

20190918

ELEVATOR GENERAL NOTES:

1. SEE ELEVATOR DRAWINGS FOR WORK AT ELEVATOR HOISTWAY, TYP
2. SEAL AROUND ANY PENETRATIONS INTO SHAFT WALLS WITH 2-HOUR FIRE RATING, SEE 1/A502
3. SEE -/A403 FOR ELEVATOR CAB FINISH MATERIAL

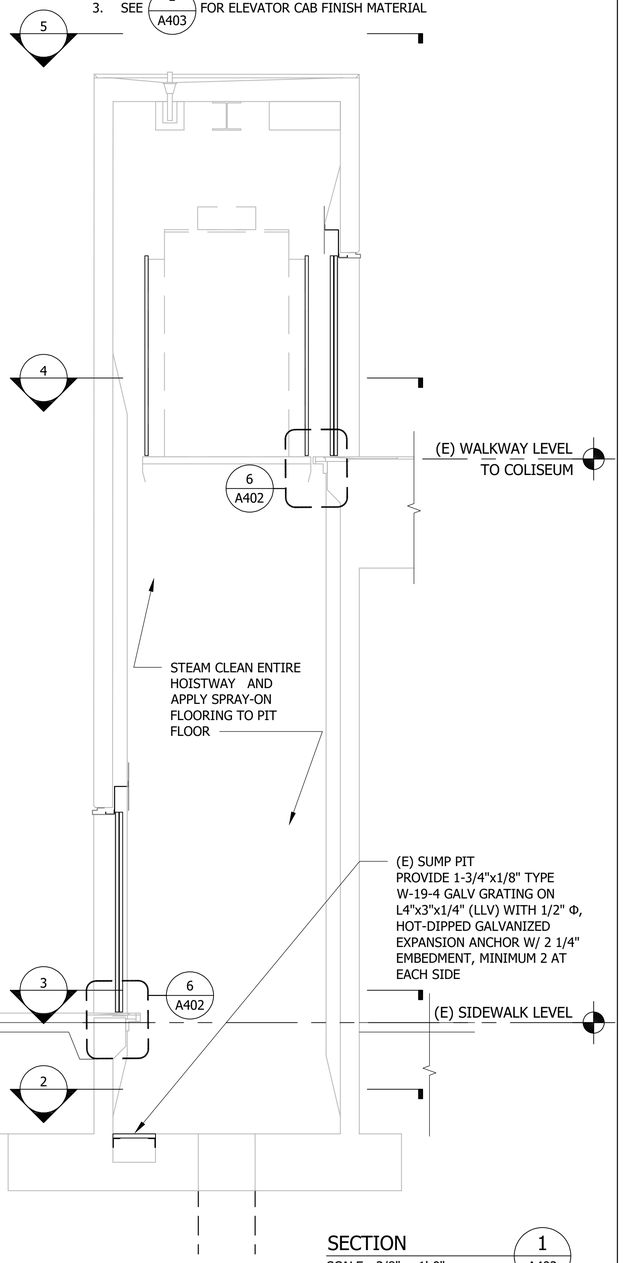

SECTION — 1 / A402
SCALE: 3/8" = 1'-0"

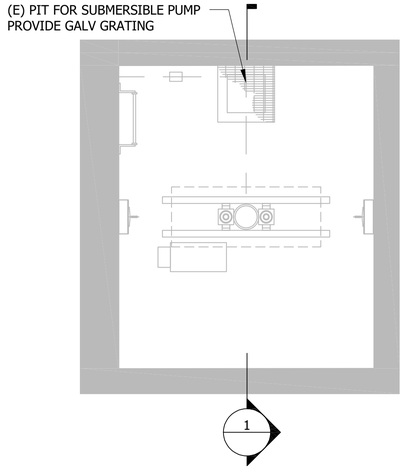

PLAN @ PIT — 2 / A402 A121
SCALE: 1/2" = 1'-0"

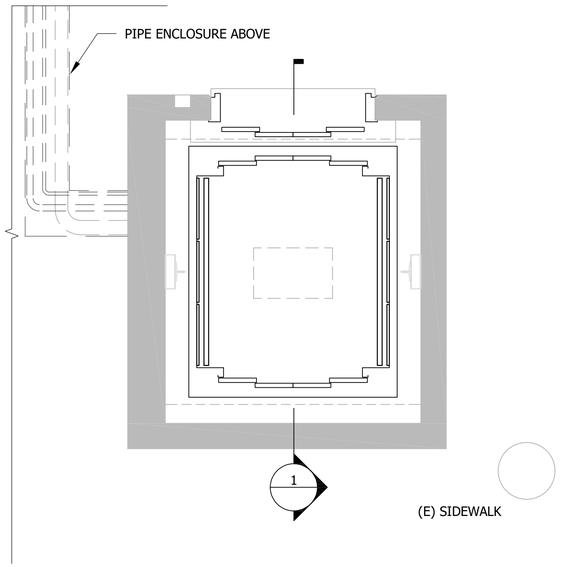

PLAN @ CONCOURSE LEVEL — 3 / A402 A121
SCALE: 1/2" = 1'-0"

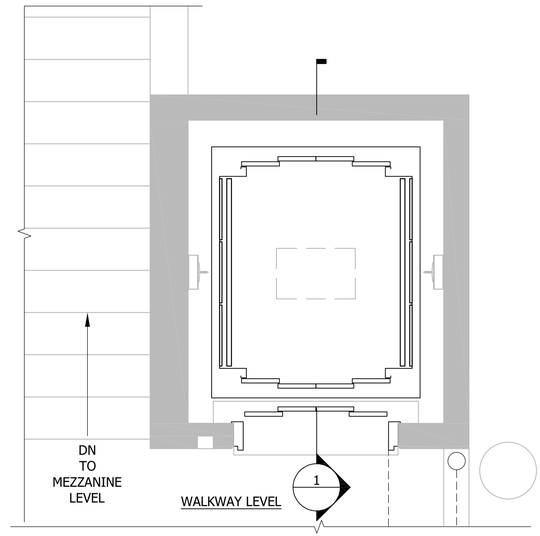

PLAN @ WALKWAY LEVEL — 4 / A402 A122
SCALE: 1/2" = 1'-0"

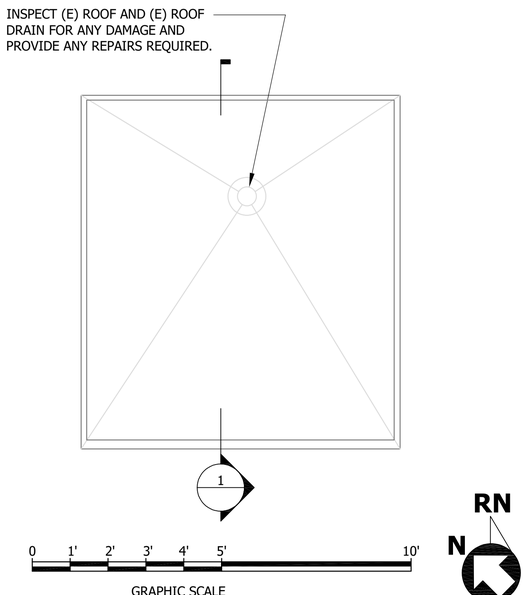

ROOF PLAN — 5 / A402 A122
SCALE: 1/2" = 1'-0"

SILL SUPPORT DETAIL NOTES:

1. ANGLE AND MECHANICAL ANCHOR SHALL BE HOT-DIP GALVANIZED.
2. STEEL ANGLE SHALL CONFORM TO ASTM A36.
3. APPROVED ICC-ES REPORT SHALL BE PROVIDED FOR MECHANICAL ANCHOR.
4. PERFORM X-RAY SCAN AND LOCATE EXISTING CONCRETE REBAR BEFORE CORE DRILLING THE EXISTING CONCRETE STRUCTURE TO AVOID CUTTING EXISTING REBARS.

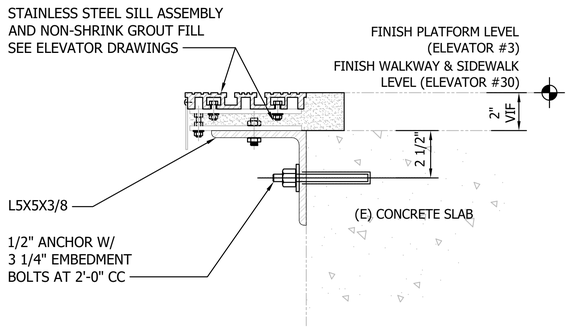

ELEVATOR SILL SUPPORT DETAIL — 6 / A402 A401 A402
SCALE: 3" = 1'-0"

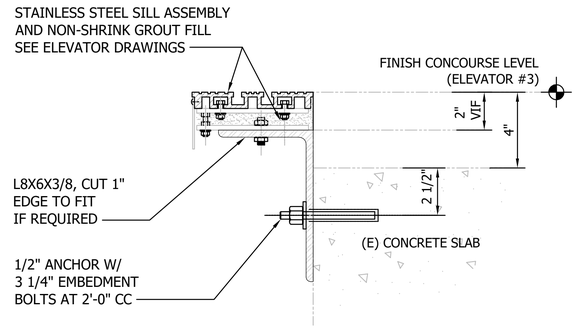

ELEVATOR SILL SUPPORT DETAIL — 7 / A402 A401
SCALE: 3" = 1'-0"

REV.	DATE	BY	SUB	APP.	DESCRIPTION
P	20260518				ISSUED FOR BID

DESIGNED: R. LEE
DRAWN: E. RODRIGUEZ
CHECKED: R. LEE
APPROVED: R. LEE
DATE:

LICENSED ARCHITECT RAYMOND LEE C 30458 EXP. 9-30-27 STATE OF CALIFORNIA

SAN FRANCISCO BAY AREA RAPID TRANSIT DISTRICT

PGH WONG ENGINEERING, INC. — SUBMITTED

PGH WONG ENGINEERING, INC. — APPROVED

COLISEUM STATION ELEVATOR MODERNIZATION

PLANS AND SECTION
ELEVATOR #30

CADD FILENAME: 15NL-140-A402
SIZE: D | SCALE: AS SHOWN
CONTRACT NO.: 15NL-140 | REV.: P
CONTRACT SHEET NO.: A402 | PAGE NO.: 012

20190918

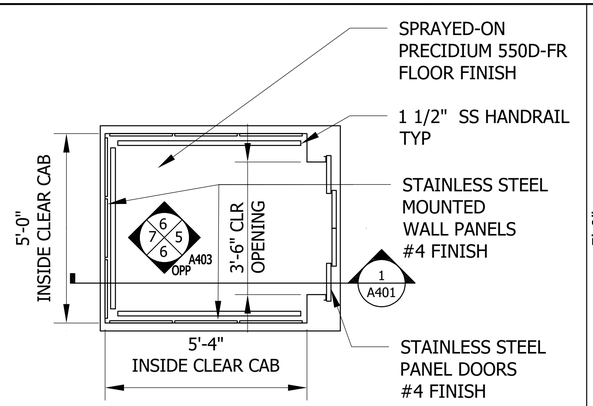

FLOOR PLAN - ELEVATOR #3 CAB 1 / A403 — A122, A401

SCALE: 1/2" = 1'-0"

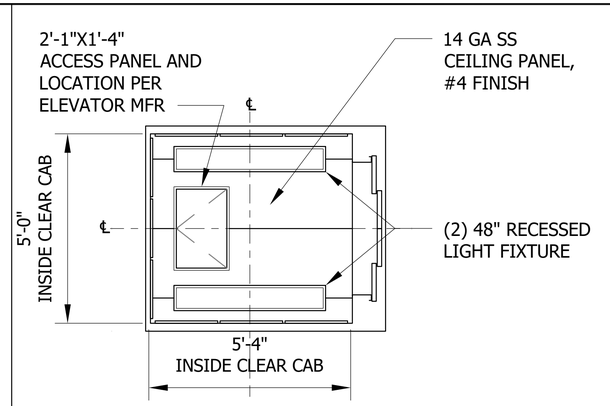

REFLECTED CEILING PLAN - ELEVATOR #3 CAB 2 / A403 — A122, A401

SCALE: 1/2" = 1'-0"

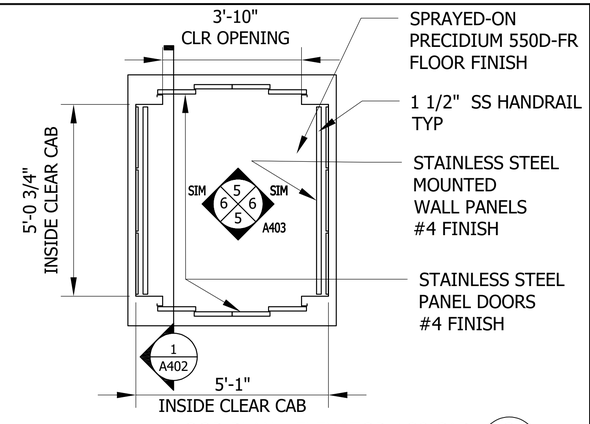

FLOOR PLAN - ELEVATOR #30 CAB 3 / A403 — A122, A402

SCALE: 1/2" = 1'-0"

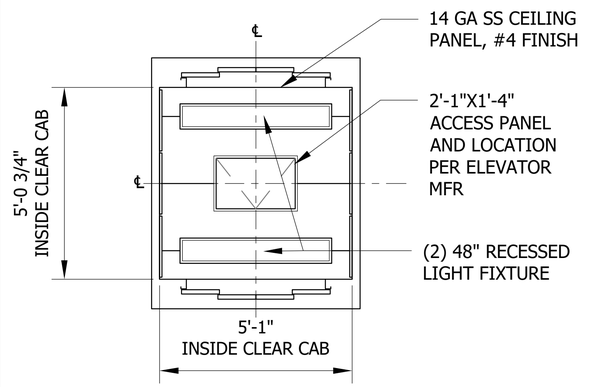

REFLECTED CEILING PLAN - ELEVATOR #30 CAB 4 / A403 — A122, A402

SCALE: 1/2" = 1'-0"

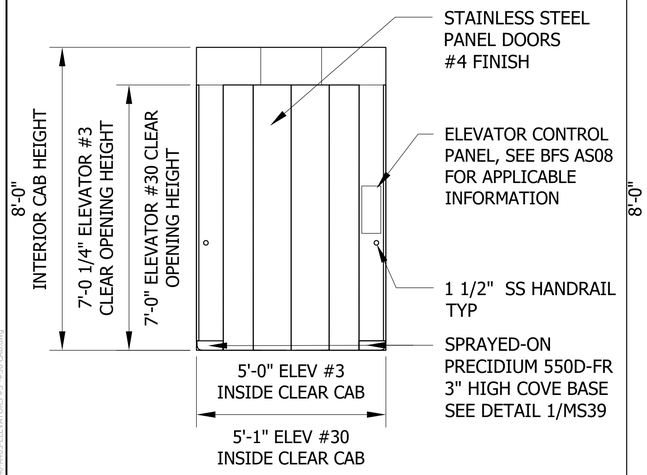

INTERIOR ELEVATION - ELEVATOR CAB DOOR SIDE 5 / A403 — A122

SCALE: 1/2" = 1'-0"

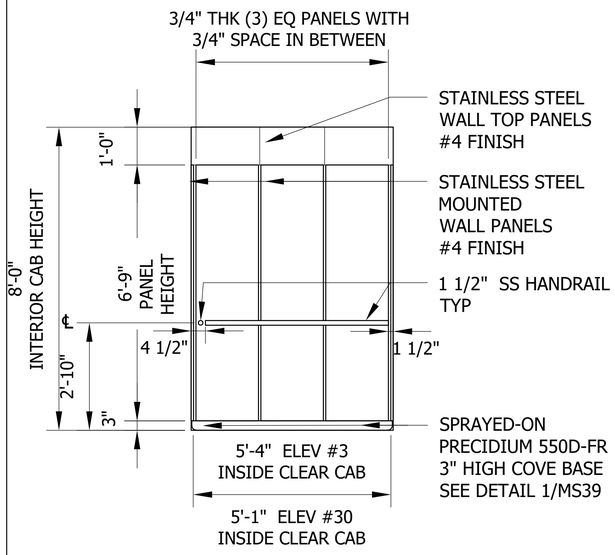

INTERIOR ELEVATION - ELEVATOR CAB SIDE 6 / A403 — A122

SCALE: 1/2" = 1'-0"

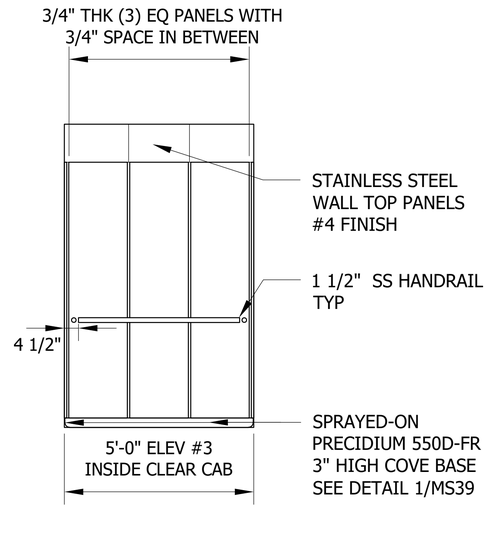

INTERIOR ELEVATION - ELEVATOR CAB REAR 7 / A403 — A122

SCALE: 1/2" = 1'-0"

ELEVATOR CAB GENERAL NOTES:

1. DIMENSIONS ARE TO FACE OF FINISH, UON

0 1' 2' 3' 4' 5' 10'

GRAPHIC SCALE

REV.	DATE	BY	SUB	APP.	DESCRIPTION
P	20260518				ISSUED FOR BID

DESIGNED: R. LEE
DRAWN: E. RODRIGUEZ
CHECKED: R. LEE
APPROVED: R. LEE
DATE:

LICENSED ARCHITECT RAYMOND LEE C 30458 EXP. 9-30-27 STATE OF CALIFORNIA

SAN FRANCISCO BAY AREA RAPID TRANSIT DISTRICT

PGH WONG ENGINEERING, INC. — SUBMITTED

PGH WONG ENGINEERING, INC. — APPROVED

COLISEUM STATION ELEVATOR MODERNIZATION

ELEVATOR CAB PLANS, REFLECTED CEILING PLANS
AND INTERIOR ELEVATIONS
ELEVATOR #3 AND ELEVATOR #30

CADD FILENAME: 15NL-140-A403
SIZE: D | SCALE: AS SHOWN
CONTRACT NO.: 15NL-140 | REV.: P
CONTRACT SHEET NO.: A403 | PAGE NO.: 013

Plot By: PGH Wong Engineering, Inc. | Plot Date: 5/18/2026 | Drawing: P:\15NL-140 Coliseum Station Modernization\3.0 Working\Drawings\3.4 Architectural\15NL-140-A403 ELEVATORS #3 & #30 CAB.dwg

1. PARTITION TYPES ARE INDICATED IN DIAMOND BOX SYMBOLS LINKED TO THE WALL THEY DESCRIBE



2. THE PARTITION TYPE EXTEND THE ENTIRE LENGTH OF THE WALL WHERE IT IS SHOWN, ACROSS DOORS, WINDOWS AND MINOR PARTITION TYPE ENDS AT THE INTERSECTION WITH ANOTHER SPACE, DEFINED BY AN INSIDE OR OUTSIDE CORNER, INCLUDING INTERVENING CORRIDORS, UNLESS OTHERWISE SPECIFICALLY NOTED ON THE DRAWINGS. SEE EXAMPLES BELOW:

3. THE INDICATED PARTITION TYPES INCLUDES ALL SIDES OF MINOR PROJECTIONS OR ALCOVES, SUCH AS RECESSED DOORS AND HEADS OVER DOORS AND WINDOWS SEE EXAMPLES BELOW:

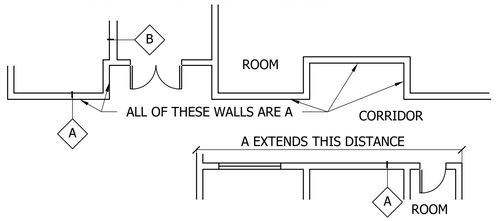

PARTITION DESIGNATION (1 / A501)
SCALE: NTS

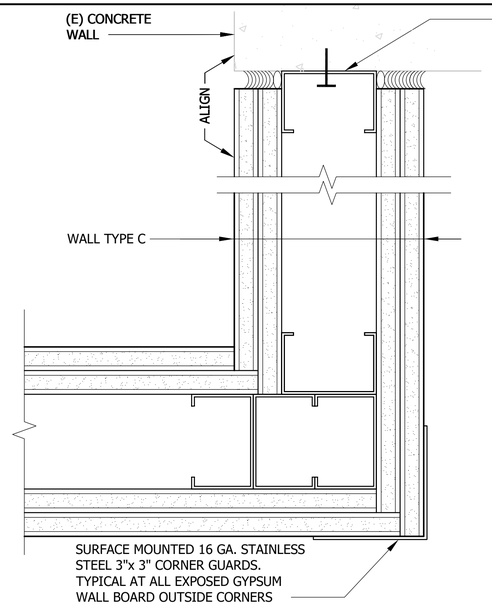

WALL CORNER DETAIL-PLAN VIEW (3 / A501 A121)
2-HR RATED PARTITION (UL U419)

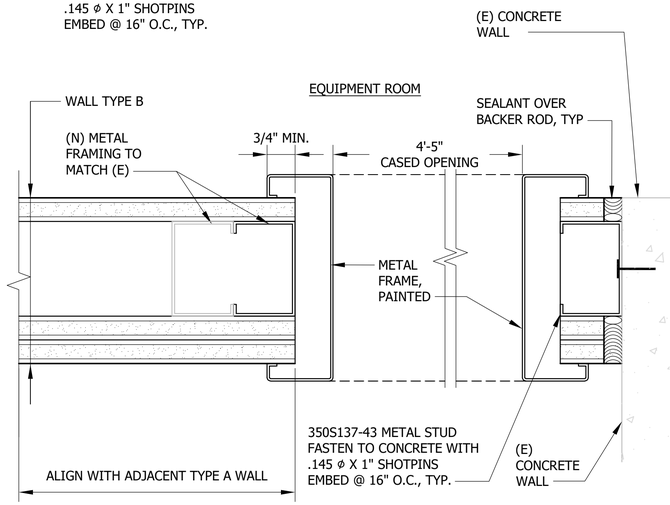

CASED OPENING DETAIL-PLAN VIEW (4 / A501 A121 A502)

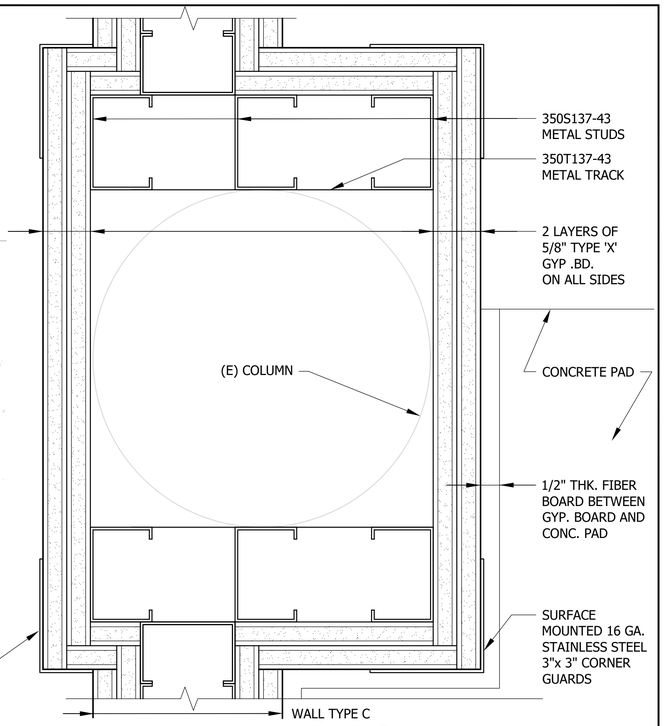

WALL DETAIL AT COLUMN-PLAN VIEW (5 / A501 A121 A502)

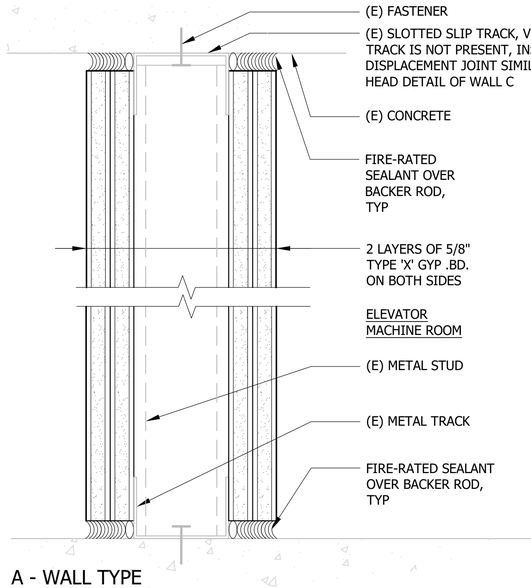

A - WALL TYPE
2-HR RATED NON BEARING PARTITION (UL U411)

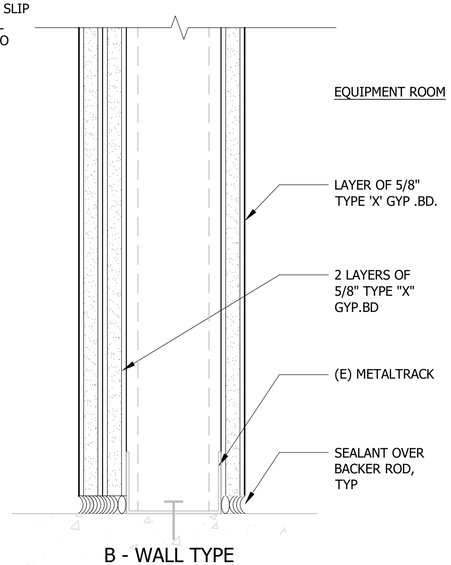

B - WALL TYPE
NOT RATED

WALL TYPES (2 / A501 A121)
SCALE: 6"=1'-0"

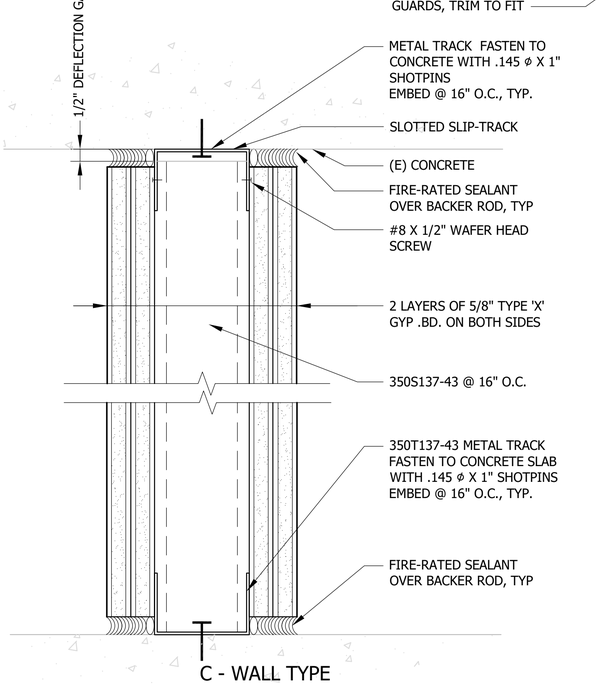

C - WALL TYPE
2-HR RATED NON-BEARING PARTITION (UL U411)

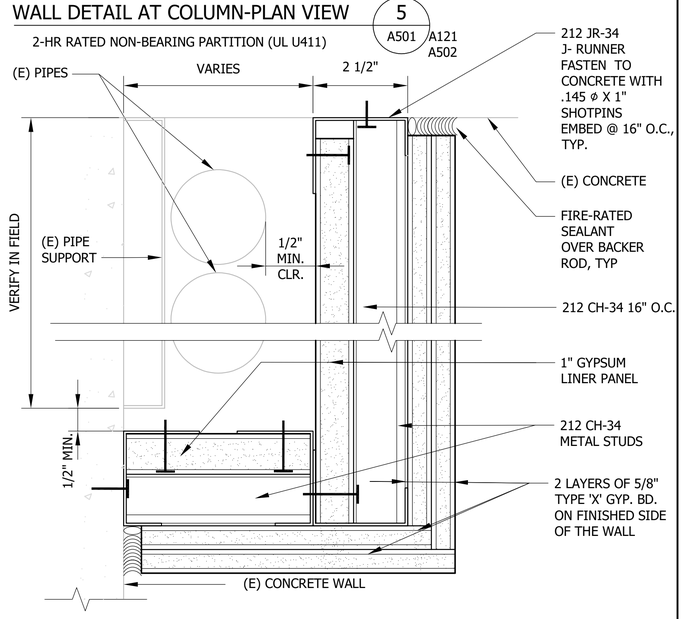

D - WALL FURRING @ EMR
2-HR RATED PARTITION (USG 09 21 16.23.479 SHAFT WALL METAL DUCT ENCLOSURE)

REV.	DATE	BY	SUB	APP.	DESCRIPTION
P	20260518				ISSUED FOR BID

DESIGNED: R. LEE
DRAWN: E. RODRIGUEZ
CHECKED: R. LEE
APPROVED: R. LEE
DATE:

LICENSED ARCHITECT RAYMOND L LEE C 30458 EXP. 9-30-27 STATE OF CALIFORNIA

SAN FRANCISCO BAY AREA RAPID TRANSIT DISTRICT

PGH WONG ENGINEERING, INC. — SUBMITTED

PGH WONG ENGINEERING, INC. — APPROVED

COLISEUM STATION ELEVATOR MODERNIZATION

WALL TYPES AND DETAILS

CADD FILENAME: 15NL-140-A501
SIZE: D | SCALE: AS SHOWN
CONTRACT NO.: 15NL-140 | REV.: P
CONTRACT SHEET NO.: A501 | PAGE NO.: 014

20190918

ChristopherGuiterrez May 05, 2026 - 11:28am V:\BEA50-1400 Elevator Modernization\07 Working (Design)\07.4 Architecture\07.4.1 CAD\15NL-140-A501-WALLTYPES AND DETAILS.dwg

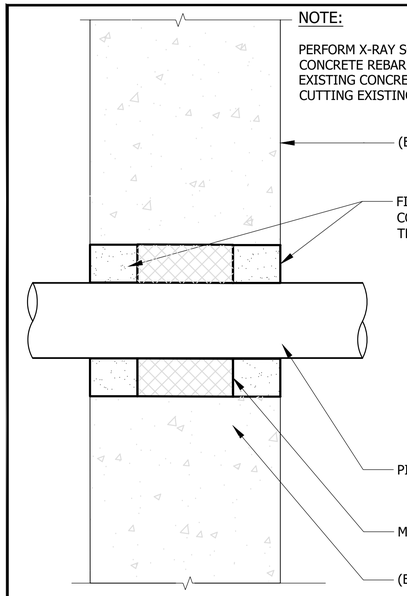

SECTION THROUGH WALL PENETRATION — 1 — A502 / A121 A402

SCALE: 6" = 1'-0"

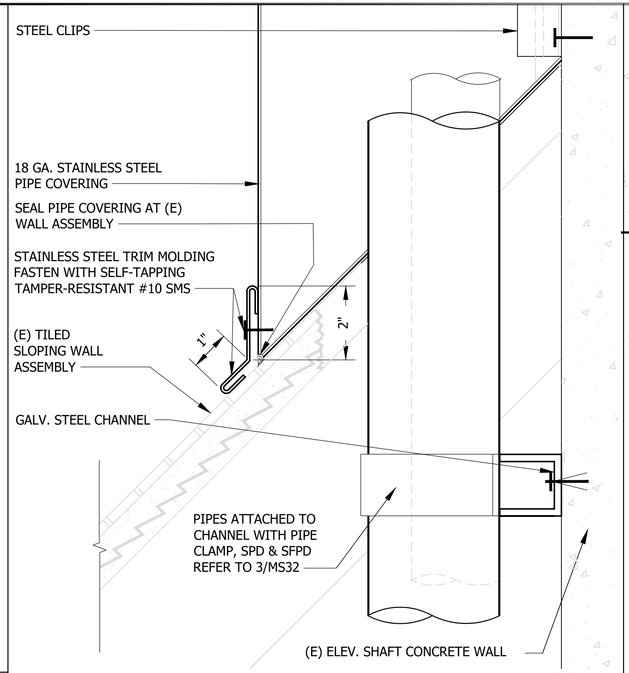

SECTION THROUGH WALL PENETRATION — 2 — A502 / A401

SCALE: 6" = 1'-0"

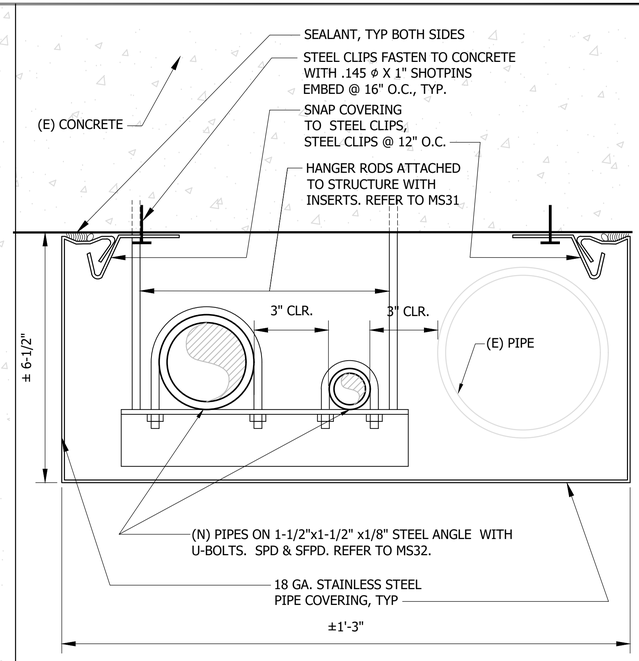

PIPE ENCLOSURE @ STAIR SOFFIT — 3 — A502 / A121

SCALE: 6" = 1'-0"

NOTE:

ALL DIMENSIONS TO BE COORDINATED AND CONFIRMED BY CONTRACTOR BEFORE FABRICATION.

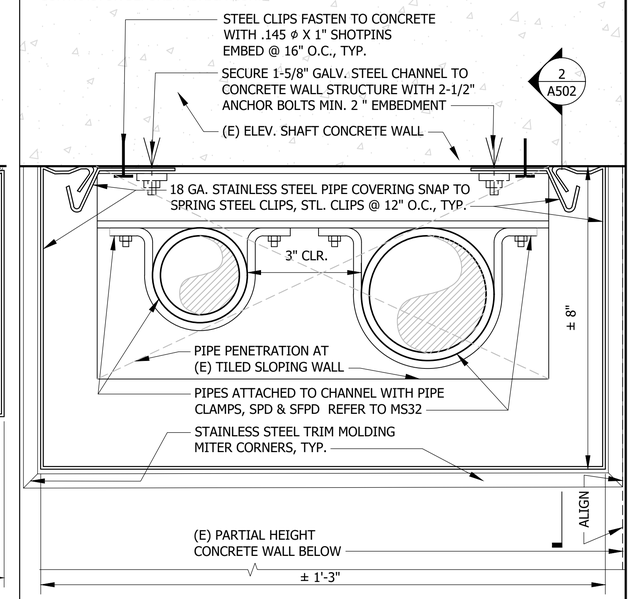

VERTICAL PIPE ENCLOSURE @ ELEVATOR #3 — 4 — A502 / A401 P403

SCALE: 6" = 1'-0"

NOTE:

CONCRETE: F'C=3000 PSI
POST ANCHORS: ASTM A615 STEEL W/ FY=60KSI
DOWELS: ASTM F1554 GRADE 36 W/ HILTI HIT-HY 200 OR EQUIVALENT

IMPORTANCE FACTOR: 1.25.

ALL ANCHORS SHALL BE HOT-DIPPED GALVANIZED

CONTINUOUS SPECIAL INSPECTION SHALL BE CONDUCTED WHEN ADHESIVE ANCHORS INSTALLED IN HORIZONTALLY OR UPWARDLY INCLINED ORIENTATIONS TO RESIST SUSTAINED TENSION LOADS. PERIODIC SPECIAL INSPECTION SHALL BE CONDUCTED FOR ALL OTHER ANCHORS. WHEN PERIODIC SPECIAL INSPECTION IS CONDUCTED, THE NUMBER OF ANCHORS INSPECTED SHALL NOT BE LESS THAN 25% OF ANCHORS INSTALLED. INSPECTION SHALL CONDUCTED BY PERSONS CERTIFIED BY ACI/CRSI OR EQUIVALENT. ANCHORS SHALL BE TESTED FOR LOAD PROOFING IN THE FIELD AT A PERCENTAGE NOT LESS THAN 15% OR 4 ANCHORS FOR THE SAME BATCH OF INSTALLATION. THE TEST LOAD SHALL BE 2/3 OF ANCHOR DESIGN CAPACITY. FIELD TEST SHALL BE IN ACCORDANCE WITH ACI 355.2 OR ICC-ES AC193 FOR POST-INSTALLED MECHANICAL ANCHORS, ACI A308 FOR POST-INSTALLED ADHESIVE ANCHORS OR ASTM E3121/E3221M.

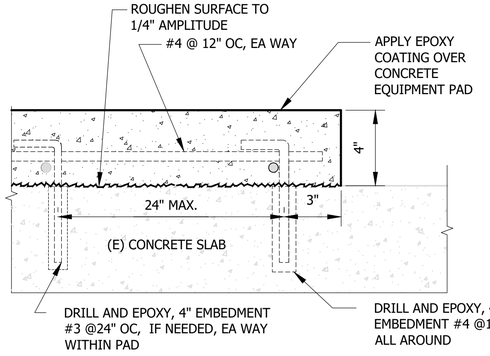

CONCRETE PAD SECTION — 5 — A502

SCALE: 3" = 1'-0"

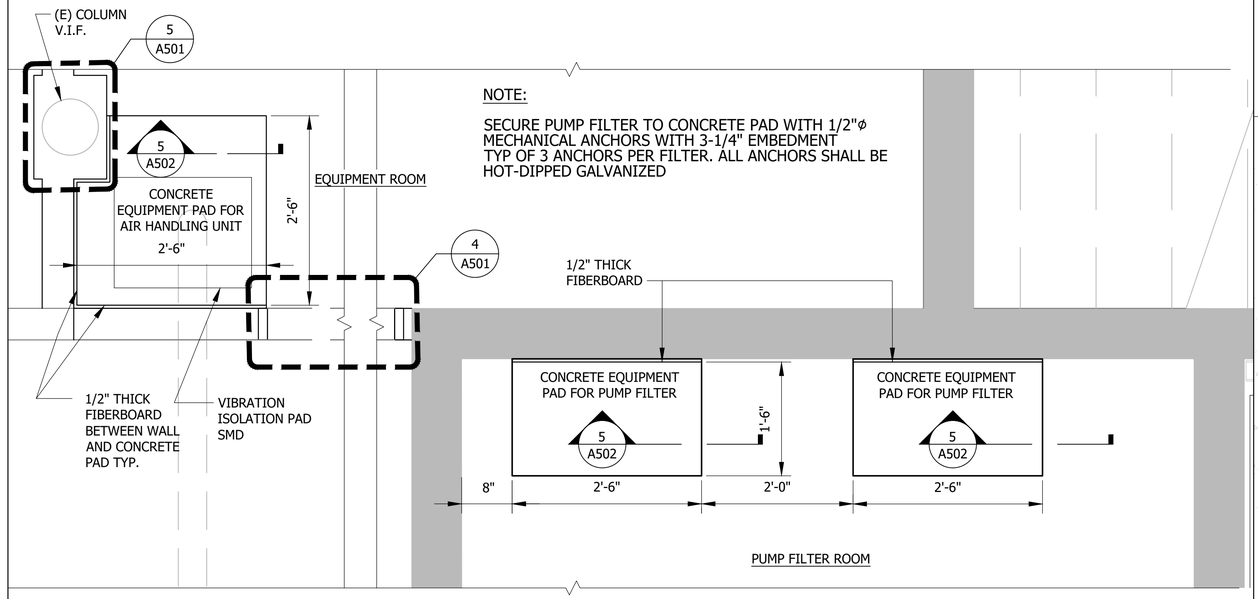

CONCRETE PAD PLAN — 6 — A502 / A121

SCALE: 1" = 1'-0"

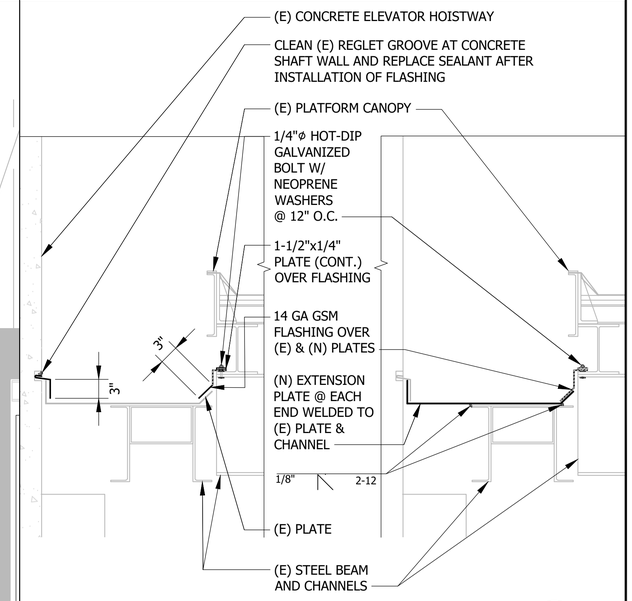

FLASHING DETAIL — 7 — A502 / A401

SCALE: 1" = 1'-0"

FLASHING DETAIL — 8 — A502

SCALE: 1" = 1'-0"

REV.	DATE	BY	SUB	APP.	DESCRIPTION
P	20260518				ISSUED FOR BID

DESIGNED: R. LEE
DRAWN: E. RODRIGUEZ
CHECKED: R. LEE
APPROVED: R. LEE
DATE: 20190918

LICENSED ARCHITECT RAYMOND LEE C 30458 REN: 9-30-21 STATE OF CALIFORNIA

SAN FRANCISCO BAY AREA RAPID TRANSIT DISTRICT

PGH WONG ENGINEERING, INC. — SUBMITTED

PGH WONG ENGINEERING, INC. — APPROVED

COLISEUM STATION ELEVATOR MODERNIZATION

MISCELLANEOUS DETAILS
SHEET 1 OF 2

CADD FILENAME: 15NL-140-A502
SIZE: D | SCALE: AS SHOWN
CONTRACT NO.: 15NL-140 | REV.: P
CONTRACT SHEET NO.: A502 | PAGE NO.: 015

© Copyright 2026 PGH Wong Engineering, Inc. All Rights Reserved. This Drawing is an Instrument of Service and Shall Not Be Used in Whole or in Part Without the Written Consent of PGH Wong Engineering, Inc.

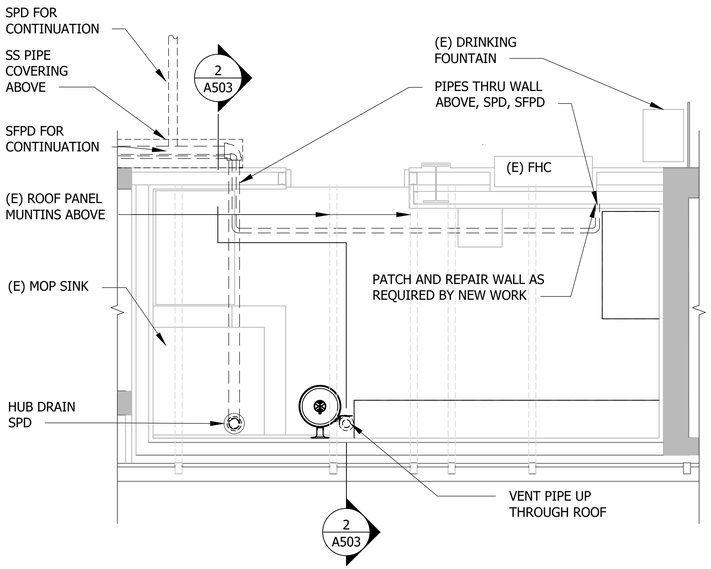

PARTIAL PLAN - CUSTODIAL ROOM 1 A503 A010

SCALE: 1/2" = 1'-0"

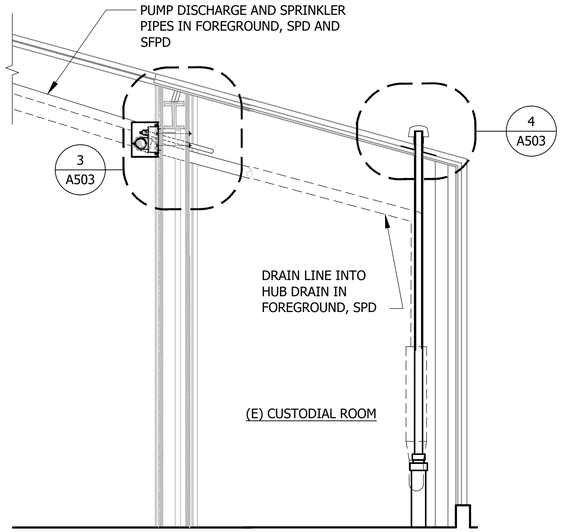

SECTION AT CUSTODIAL ROOM 2 A503

SCALE: 1/2" = 1'-0"

NOTE

PIPE COVERING TO ENCLOSE ENTIRE HORIZONTAL RUN (±15'-6") OF (N) PIPE ALONG THE WALL. VERIFY LENGTH IN FIELD.

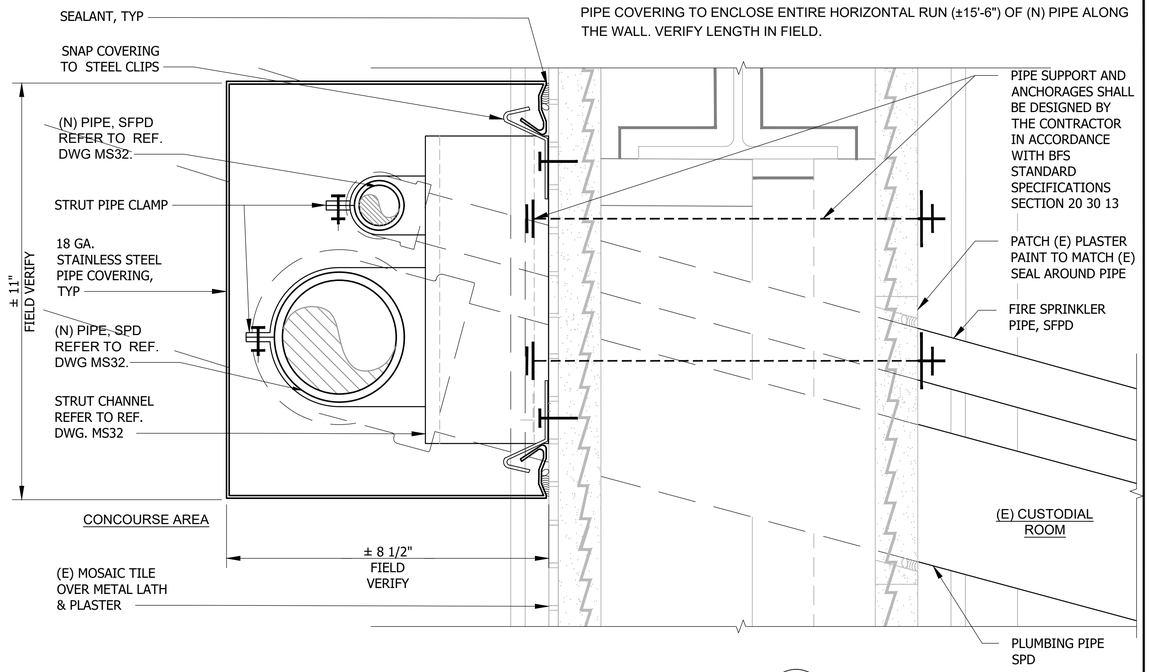

PIPE PENETRATION DETAIL 3 A503

SCALE: 6" = 1'-0"

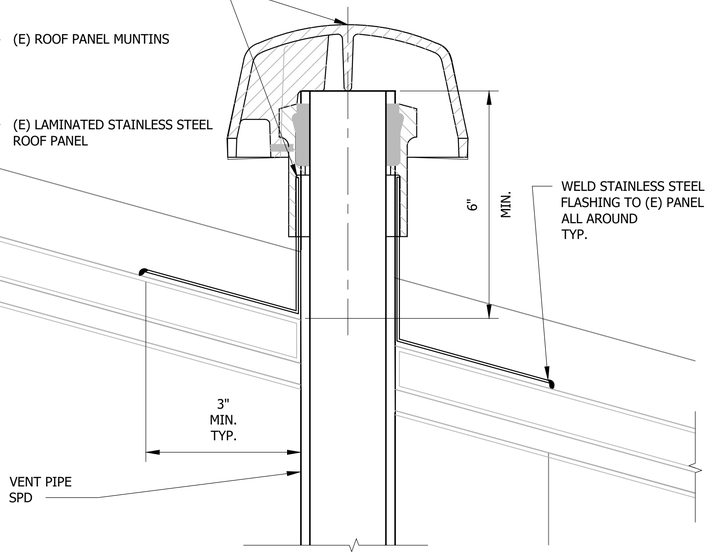

PLUMBING VENT FLASHING DETAIL 4 A503

SCALE: 6" = 1'-0"

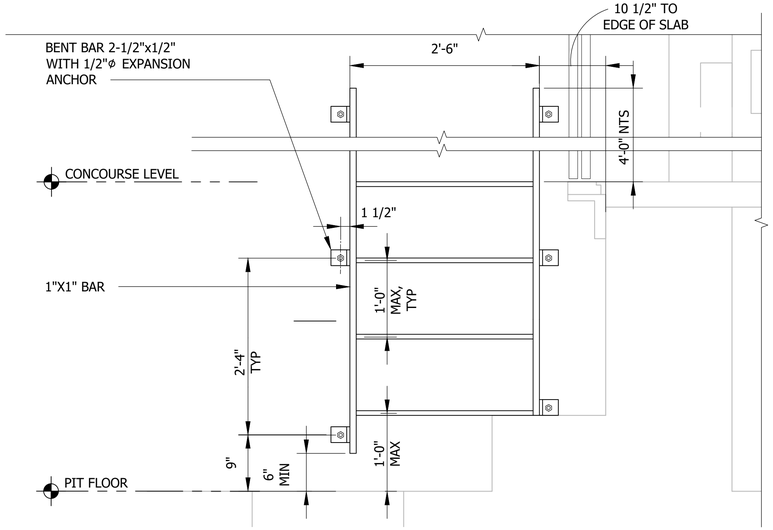

ELEVATOR PIT LADDER ELEVATION 5 A503 A401

SCALE: 1" = 1'-0"

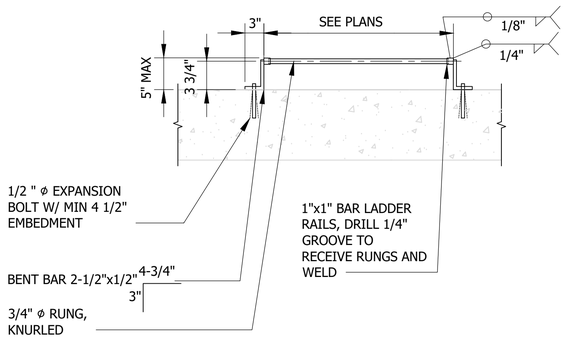

PLAN VIEW OF LADDER 6 A503 A401

SCALE: 1" = 1'-0"

REV.	DATE	BY	SUB	APP.	DESCRIPTION
P	20260518				ISSUED FOR BID

DESIGNED: R. LEE
DRAWN: E.RODRIGUEZ/G. HEMMAT
CHECKED: R. LEE
APPROVED: R. LEE
DATE: 20190918

LICENSED ARCHITECT RAYMOND LEE C 30458 EXP. 9-30-21 STATE OF CALIFORNIA

SAN FRANCISCO BAY AREA RAPID TRANSIT DISTRICT

PGH WONG ENGINEERING, INC. — SUBMITTED

PGH WONG ENGINEERING, INC. — APPROVED

COLISEUM STATION ELEVATOR MODERNIZATION

MISCELLANEOUS DETAILS
SHEET 2 OF 2

CADD FILENAME: 15NL-140-A503
SIZE: D | SCALE: AS SHOWN
CONTRACT NO.: **15NL-140** | REV.: **P**
CONTRACT SHEET NO.: **A503** | PAGE NO.: **016**

Plotted: May 11, 2026 - 1:30pm, User: Benjamin Rodriguez, P:\Workgroup Drawings\A-Architectural\A-1 CADD Files\15NL-140-A503 MISCELLANEOUS DETAILS.dwg

FINISH SCHEDULE

SPACE NUMBER	SPACE NAME	FLOOR: ELEVATOR SPRAY - ON FLOORING	FLOOR: RESINOUS FLOORING	WALL: PAINTED GYP BOARD	CEILING: EXISTING	REMARKS
A001	ELEVATOR #3 PIT & SHAFT	●				APPLY CONCRETE WATERPROOFING PENETRATING SEALER ALL AROUND THE ENTIRE EXTERIOR CONCRETE FACE OF SHAFT WALL.
A002	ELEVATOR #30 PIT & SHAFT	●				
A101	ELEVATOR MACHINE ROOM		●	●	●	
A102	EQUIPMENT ROOM		●	●	●	APPLY RESINOUS FLOORING OVER CONCRETE PAD
A103	PUMP FILTER ROOM		●	●	●	APPLY RESINOUS FLOORING OVER CONCRETE PAD

DOOR SCHEDULE

DOOR NO	DOOR: MATERIAL	TYPE	FINISH	RATING	SIZE: W	SIZE: HT	SIZE: THK	FRAME: MATERIAL	FRAME: TYPE	FRAME: FINISH	DETAILS: HEAD	DETAILS: JAMB	DETAILS: THRESHOLD	HARDWARE GROUP	REMARKS
1	HM	A	PAINT	90 MIN.	3'-6"	7'-0"	1 3/4"	HM	1	PAINT	1/A601(SIM)	1/A601	A601	GROUP 1	
2	-	-	-	-	4'-5"	7'-0"	-	HM	1	PAINT	4/A501(SIM)	4/A501	-	-	DOOR FRAME ONLY

DOOR TYPES

FRAME TYPES

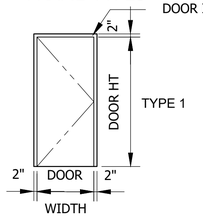

DOOR ID PLAQUE

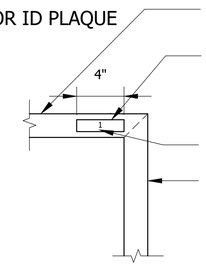

PLACEMENT: MOUNT (1) DOOR ID PLAQUE FOR EACH FACE OF EVERY DOOR, ON THE RIGHT SIDE OF THE DOOR FRAME

1/16" THICK ROWMARK WHITE SIGN PLAQUE, CENTER VERTICALLY ON DOORFRAME HEAD WITH EDGES TO BE SAME COLOR AS PLAQUE FACE

OPTION: 2 MIL DOUBLE FACED ADHESIVE SHEETING

ENGRAVED BLACK TEXT FONT: UNIVERS 55 ROMAN

DOOR FRAME

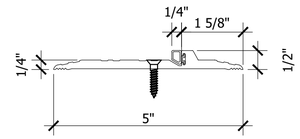

THRESHOLD

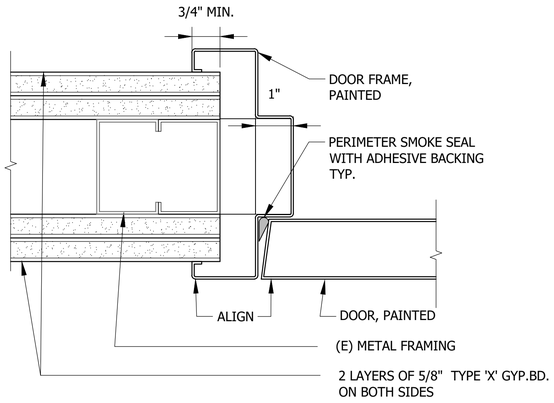

DOOR JAMB DETAIL — 1 / A601 / A121

SCALE: 6" = 1'-0"

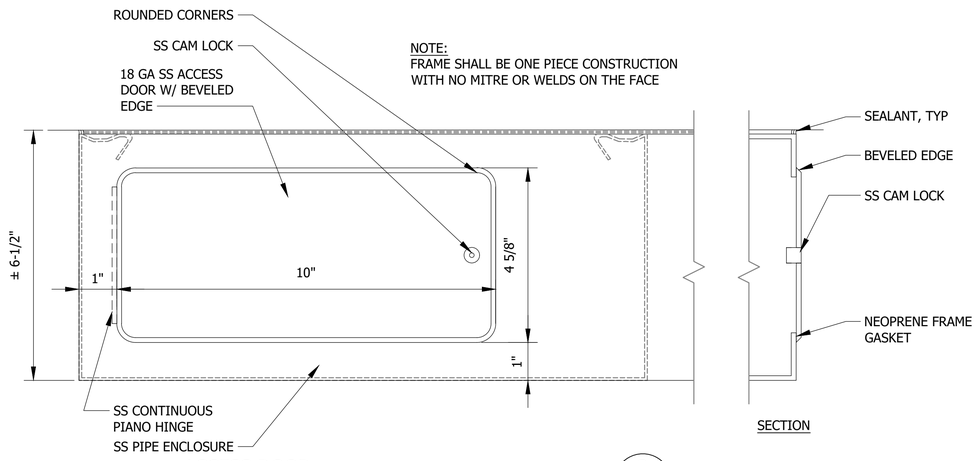

ACCESS DOOR — 2 / A601 / A121

SCALE: 6" = 1'-0"

FINISH SCHEDULE NOTES:

1. ALL STRUCTURAL AND NON-STRUCTURAL STEELS, FACTORY FINISHED OR GALVANIZED TO RECEIVE PAINT FINISH.
2. ALL EXPOSED NON-PREFINISHED PIPES, CONDUITS, DUCTWORKS, ETC TO RECEIVE PAINT FINISH.

DOOR SCHEDULE NOTES:

1. DOOR MATERIAL
   HM= HOLLOW METAL
2. FRAME MATERIAL
   HM= HOLLOW METAL
3. HARDWARE GROUP:
   REFER TO HARDWARE GROUP IN SPECIFICATIONS.
4. GENERAL DOOR NOTES:
   - A. ALL OPERATING DOORS TO HAVE LEVER HANDLES.
   - B. ALL EXIT DOORS SHALL BE OPENABLE FROM THE INSIDE WITHOUT USE OF KEY OR ANY SPECIAL KNOWLEDGE OR EFFORT.
   - C. WHERE CLOSER IS INDICATED, THE CLOSING FORCE SHALL BE SET AS FOLLOWS:
     RATED DOORS - 15 LBS, WHEN ALLOWED BY JURISDICTION
     INTERIOR DOORS - 5 LBS
   - D. DOORS WITHIN THE PATH OF TRAVEL FOR ACCESSIBLE ROUTE TO BE OPERABLE WITH A SINGLE EFFORT BY LEVER, PANIC BAR OR PUSH/PULL HARDWARE. SEE CONTRACT SPECIFICATIONS SECTION 08 71 00 FOR HARDWARE MOUNTING HEIGHTS.
   - E. UNLESS OTHERWISE NOTED, DOORS NOT LOCATED ON THE PLANS BY DIMENSION SHALL BE CENTERED IN THE WALL OR LOCATED 4" FROM THE FINISH WALL TO THE EDGE OF THE DOOR FRAME LEAF (HINGED EDGE.)
   - F. ALL NEW DOOR FRAMES SHALL RECEIVE DOOR ID PLAQUE, SEE DOOR ID PLAQUE DETAIL, THIS SHEET.
   - G. THE BOTTOM 10" OF A DOOR OR GATE IN THE PATH OF TRAVEL SHALL HAVE A SMOOTH SURFACE.
   - H. SEE FLOOR PLANS FOR DOOR SWING DIRECTION.
   - I. ALL MANDOOR FRAMES TO BE WELDED.

REV.	DATE	BY	SUB	APP.	DESCRIPTION
P	20260518				ISSUED FOR BID

DESIGNED: R. LEE
DRAWN: E. RODRIGUEZ
CHECKED: R. LEE
APPROVED: R. LEE
DATE: 20190918

LICENSED ARCHITECT RAYMOND LEE C 30458 EXP. 9-30-21 STATE OF CALIFORNIA

SAN FRANCISCO BAY AREA RAPID TRANSIT DISTRICT

PGH WONG ENGINEERING, INC. — SUBMITTED

PGH WONG ENGINEERING, INC. — APPROVED

COLISEUM STATION ELEVATOR MODERNIZATION

FINISH SCHEDULE
DOOR SCHEDULE

CADD FILENAME: 15NL-140-A601
SIZE: D | SCALE: AS SHOWN
CONTRACT NO.: 15NL-140 | REV.: P
CONTRACT SHEET NO.: A601 | PAGE NO.: 017

Plotted: May 05, 2026 - 11:08:56 AM | Plotted By: Rodriguez, Eduardo | Workspace: Default | Xref: A Architectural A1 Drawings\15NL-140-A601 DOOR FIN SCHEDULES.dwg

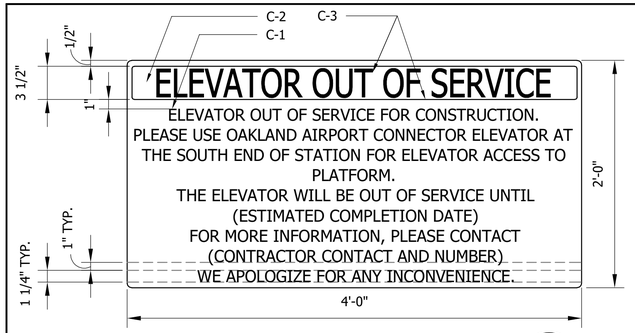

NOTIFICATION SIGNAGE @ CONCOURSE LEVEL 1 — A700 A011

SCALE: 1- 1/2"=1'-0

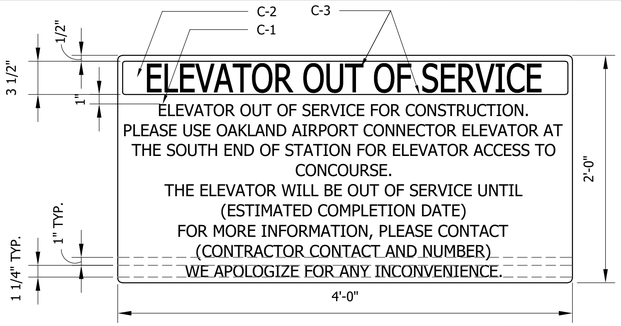

NOTIFICATION SIGNAGE @ PLATFORM LEVEL 2 — A700 A012

SCALE: 1-1/2"=1'-0

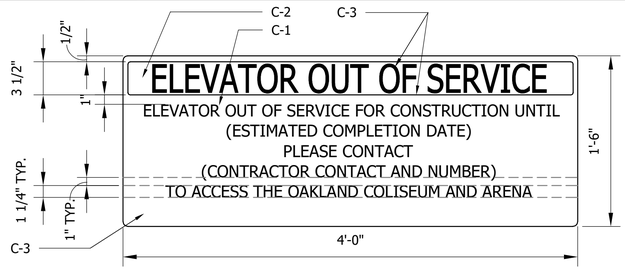

NOTIFICATION SIGNAGE @ STREET & WALKWAY LEVEL 3 — A700 A011 A012

SCALE: 1- 1/2"=1'-0

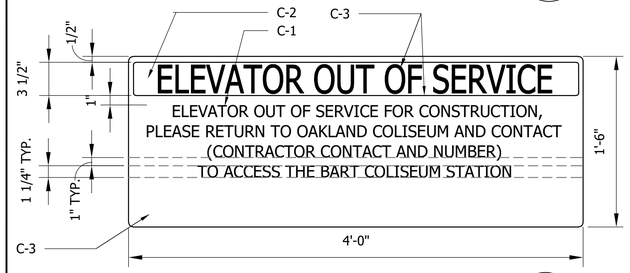

NOTIFICATION SIGNAGE @ PLATFORM LEVEL 4 — A700 A012

SCALE: 1-1/2"=1'-0

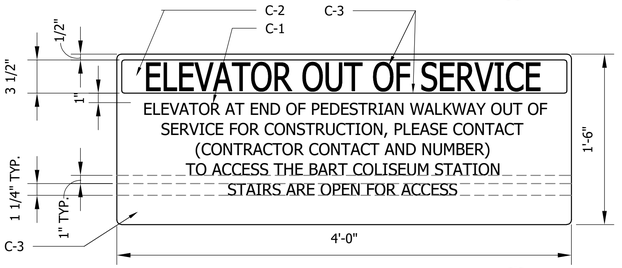

NOTIFICATION SIGNAGE @ PLATFORM LEVEL 5 — A700 A012

SCALE: 1-1/2"=1'-0

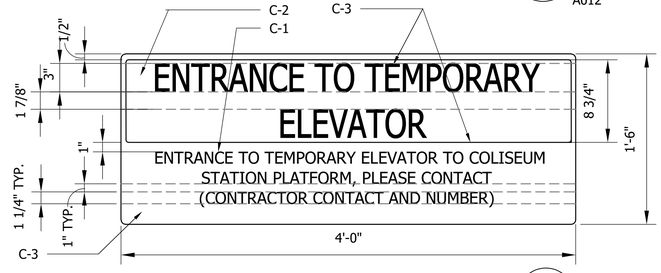

NOTIFICATION SIGNAGE @ CONCOURSELEVEL 6 — A700 A011 A012

SCALE: 1- 1/2"=1'-0

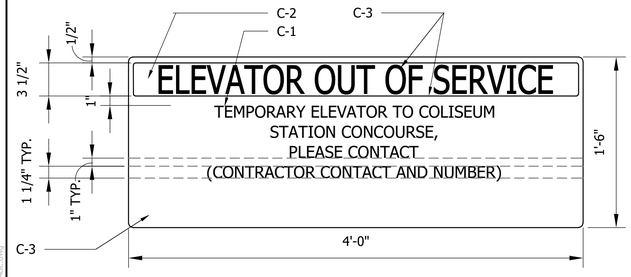

NOTIFICATION SIGNAGE @ PLATFORM LEVEL 7 — A700 A012

SCALE: 1-1/2"=1'-0

NOTE:

REFER TO CONTRACT SPECIFICATIONS SECTION 01 57 00 TEMPORARY CONTROLS AND SECTION 10 14 00 SIGNAGE, FOR SIGNAGE REQUIREMENTS.

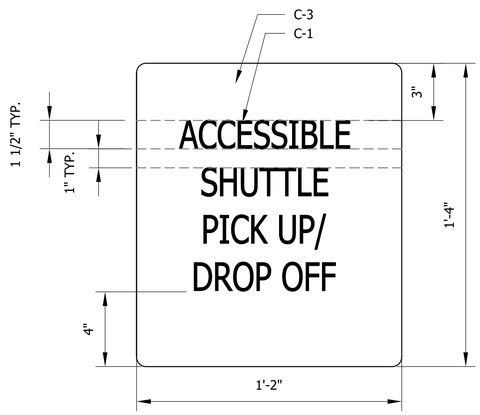

DIRECTIONAL SIGNAGE 8 — A700

SCALE: 3"=1'-0

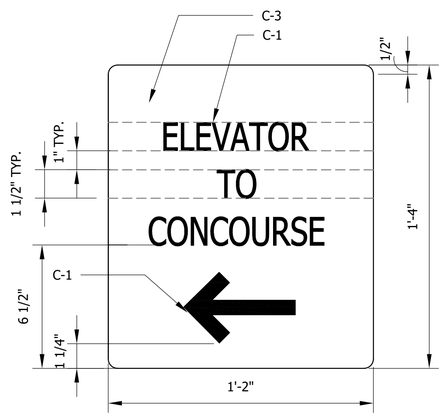

DIRECTIONAL SIGNAGE PLATFORM LEVEL 9 — A700

SCALE: 3"=1'-0

NOTE:

1. REFER TO CONTRACT SPECIFICATIONS SECTION 01 57 00 TEMPORARY CONTROLS AND SECTION 10 14 00 SIGNAGE, FOR SIGNAGE REQUIREMENTS.
2. CHANGE ARROW DIRECTION AS REQUIRED.

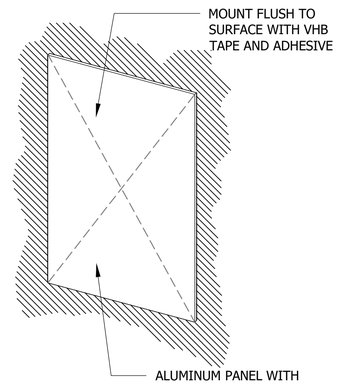

FLAT SURFACE MOUNTING 10 — A700

SCALE: 3"=1'-0

TEMPORARY NOTIFICATION SIGNS NOTES:

INK, REINFORCED WITH UV, CHEMICAL, ABRASION, AND MOISTURE RESISTANT LAMINATE LAYER, SUITABLE FOR INDOOR AND OUTDOOR INDUSTRIAL ENVIRONMENTS, WITH SERVICE TEMPERATURE RANGE -40F TO +176 F.

SUBSTRATE:	3/4" MDO EXTERIOR PLYWOOD WITH ONE COAT LATEX-BASED PRIMER, 2 FINISH COATS ACRYLIC LATEX, FINISH BOTH SIDES AND ALL EXPOSED EDGES.
PRINTED LAYER:	4.0 MIL PRESSURE SENSITIVE ADHESIVE-BACKED POLYESTER FILM.
LAMINATE:	2.5 MIL CLEAR PVC FILM- SCRATCH RESISTANT, CHEMICAL RESISTANT, AND UV RESISTANT.
MOUNTING:	FLAT SURFACE MOUNTING WITH GALVANIZED WOOD SCREWS
EDGES:	NO SHARP EDGES
CORNERS:	0.5" RADIUS CORNERS.
SUBMITTAL:	PER CONTRACT SPECIFICATIONS SECTION 10 14 00 SIGNAGE THE GRAPHICS SHOWN ARE EXAMPLE TO CONVEY THE INTENT OF THE SIGNS. THE CONTRACTOR IS RESPONSIBLE FOR ACTUAL ARTWORK PROVIDING THE INDUSTRY STANDARD GRAPHIC ART WORK REPRESENTING THE TEXT MESSAGE INDICATED FOR EACH SIGN.
FONT:	USE CONSISTENT FONT TYPE FRUTIGER BOLD 65 FOR ALL SIGNS. SUBMIT COMPUTER-GENERATED DESIGN DRAWINGS TO ILLUSTRATE LAYOUT AND ART WORK REQUIRED FOR SIGNS BASED ON THE INFORMATION PROVIDED IN THE CONTRACT DRAWINGS, FOR REVIEW AND APPROVAL BY THE ENGINEER. VERIFY ALL FIELD CONDITIONS AND REVIEW LOCATIONS AND MOUNTING METHOD OF EACH SIGN WITH THE ENGINEER PRIOR TO PREPARATION OF SHOP DRAWINGS AND FABRICATION OF SIGNS.

COLOR KEY:

- C-1: BLACK, FED-STD CHIP NO. 27038 STANDARD SAFETY SIGN LETTERING, GRAPHICS.
- C-2: OSHA SAFETY BLUE, FED-STD 595 CHIP NO. 15092 SPECIALIZED INDUSTRIAL SAFETY SIGN GRAPHIC BACKGROUND.
- C-3: WHITE, FED-STD CHIP NO. 27925 STANDARD AND SPECIALIZED SAFETY SIGN LETTERING, GRAPHICS

TEMPORARY DIRECTIONAL SIGNS NOTES:

INK, REINFORCED WITH UV, CHEMICAL, ABRASION, AND MOISTURE RESISTANT LAMINATE LAYER, SUITABLE FOR INDOOR AND OUTDOOR INDUSTRIAL ENVIRONMENTS, WITH SERVICE TEMPERATURE RANGE -40F TO +176 F.

SUBSTRATE:	0.040" ALUMINUM, WHITE TWO-COMPONENT POLYURETHANE ACRYLIC ENAMEL COATED ON BOTH SIDES.
PRINTED LAYER:	4.0 MIL PRESSURE SENSITIVE ADHESIVE-BACKED POLYESTER FILM.
LAMINATE:	2.5 MIL CLEAR PVC FILM- SCRATCH RESISTANT, CHEMICAL RESISTANT, AND UV RESISTANT.
MOUNTING:	FLAT SURFACE MOUNTING WITH TAPE AND ADHESIVE, 5/A700
EDGES:	NO SHARP EDGES.
CORNERS:	0.5" RADIUS CORNERS.
SUBMITTAL:	PER CONTRACT SPECIFICATIONS SECTION 10 14 00 SIGNAGE THE GRAPHICS SHOWN ARE EXAMPLE TO CONVEY THE INTENT OF THE SIGNS. THE CONTRACTOR IS RESPONSIBLE FOR ACTUAL ARTWORK PROVIDING THE INDUSTRY STANDARD GRAPHIC ART WORK REPRESENTING THE TEXT MESSAGE INDICATED FOR EACH SIGN.
FONT:	USE CONSISTENT FONT TYPE FRUTIGER BOLD 65 FOR ALL SIGNS. SUBMIT COMPUTER-GENERATED DESIGN DRAWINGS TO ILLUSTRATE LAYOUT AND ART WORK REQUIRED FOR SIGNS BASED ON THE INFORMATION PROVIDED IN THE CONTRACT DRAWINGS, FOR REVIEW AND APPROVAL BY THE ENGINEER. VERIFY ALL FIELD CONDITIONS AND REVIEW LOCATIONS AND MOUNTING METHOD OF EACH SIGN WITH THE ENGINEER PRIOR TO PREPARATION OF SHOP DRAWINGS AND FABRICATION OF SIGNS.

COLOR KEY:

- C-1: BLACK, FED-STD CHIP NO. 27038 STANDARD SAFETY SIGN LETTERING, GRAPHICS.
- C-3: WHITE, FED-STD CHIP NO. 27925 STANDARD AND SPECIALIZE SAFETY SIGN LETTERING, GRAPHICS

LOCATION:

CONTRACTOR TO COORDINATE WITH THE ENGINEER FOR DIRECTIONAL SIGN LOCATION.

REV.	DATE	BY	SUB	APP.	DESCRIPTION
P	20260518				ISSUED FOR BID

DESIGNED: R. LEE
DRAWN: G. HEMMAT
CHECKED: R. LEE
APPROVED: R. LEE
DATE: 20190918

LICENSED ARCHITECT RAYMOND LEE C 30458 EXP. 9-30-27 STATE OF CALIFORNIA

SAN FRANCISCO BAY AREA RAPID TRANSIT DISTRICT

PGH WONG ENGINEERING, INC. — SUBMITTED

PGH WONG ENGINEERING, INC. — APPROVED

COLISEUM STATION ELEVATOR MODERNIZATION

TEMPORARY SIGNAGE

CADD FILENAME: 15NL-140-A700
SIZE: D | SCALE: AS SHOWN
CONTRACT NO.: **15NL-140** | REV.: **P**
CONTRACT SHEET NO.: **A700** | PAGE NO.: **018**

Plotted: Sep 17, 2026 - 12:45:43 PM | Plotted By: Mayumi Ogawa | File Name: C:\Users\mogawa\Documents\15NL-140-A700_COLISEUM TEMPORARY SIGNAGE_mogawa.rvt

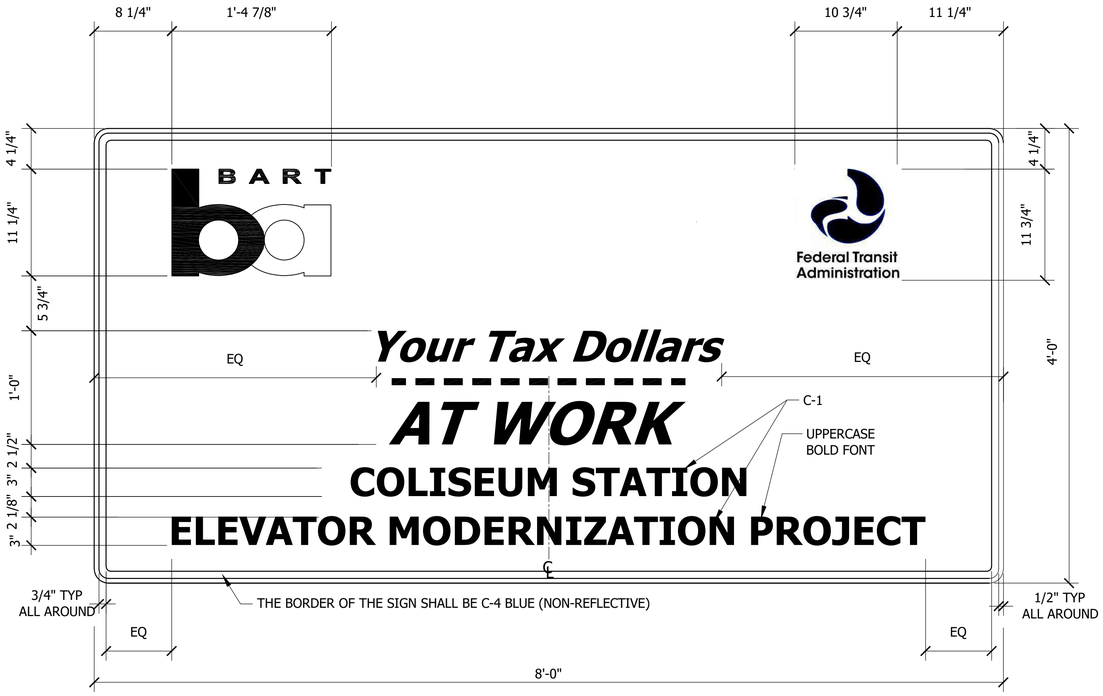

PROJECT IDENTIFICATION/GENERAL CONSTRUCTION SIGN LAYOUT — 1 / A701

SCALE: 1- 1/2"=1'-0

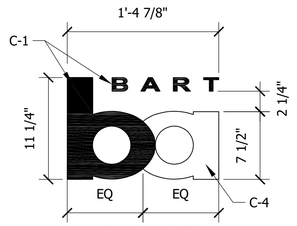

BART LOGO

ID SIGN BART LOGO — 3 / ----

SCALE: 1- 1/2"=1'-0



FTA

ID SIGN FTA — 4 / ----

SCALE: 1- 1/2"=1'-0

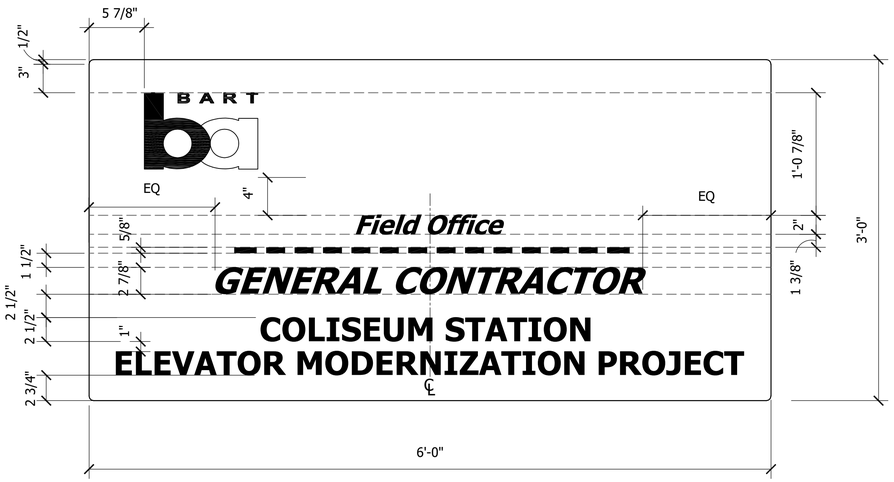

FIELD OFFICE SIGN LAYOUT — 2 / A701

SCALE: 1- 1/2"=1'-0

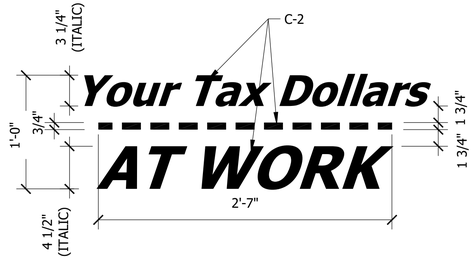

ID SIGN YOUR TAX DOLLARS AT WORK — 7 / ----

SCALE: 1- 1/2"=1'-0

TEMPORARY PROJECT IDENTIFICATION AND GENERAL CONSTRUCTION SIGNS NOTES:

INK, REINFORCED WITH UV, CHEMICAL, ABRASION, AND MOISTURE RESISTANT LAMINATE LAYER, SUITABLE FOR INDOOR AND OUTDOOR INDUSTRIAL ENVIRONMENTS, WITH SERVICE TEMPERATURE RANGE -40F TO +176 F.

SUBSTRATE:	3/4" THICK, FIVE-PLY, EXTERIOR GRADE, A-B-FACED, DOUGLAS FIR PLYWOOD WITH ONE COAT LATEX-BASED PRIMER SEALER, 2 FINISH COATS ACRYLIC LATEX ON BOTH SIDES AND ALL EXPOSED EDGES.
PRINTED LAYER:	4.0 MIL PRESSURE SENSITIVE ADHESIVE-BACKED POLYESTER FILM.
LAMINATE:	2.5 MIL CLEAR PVC FILM- SCRATCH RESISTANT, CHEMICAL RESISTANT, AND UV RESISTANT.
MOUNTING:	FLAT SURFACE MOUNTING WITH GALVANIZED WOOD SCREWS
EDGES:	NO SHARP EDGES
CORNERS:	0.5" RADIUS CORNERS
SUBMITTAL:	PER CONTRACT SPECIFICATIONS SECTION 10 14 00 SIGNAGE
	THE GRAPHICS SHOWN ARE EXAMPLES TO CONVEY THE INTENT OF THE SIGNS. THE CONTRACTOR IS RESPONSIBLE FOR ACTUAL ARTWORK PROVIDING THE INDUSTRY STANDARD GRAPHIC ART WORK REPRESENTING THE TEXT MESSAGE INDICATED FOR EACH SIGN.
FONT:	USE CONSISTENT FONT TYPE FRUTIGER BOLD 65 FOR ALL SIGNS. SUBMIT COMPUTER-GENERATED DESIGN DRAWINGS TO ILLUSTRATE LAYOUT AND ART WORK REQUIRED FOR SIGNS BASED ON THE INFORMATION PROVIDED IN THE CONTRACT DRAWINGS, FOR REVIEW AND APPROVAL BY THE ENGINEER. VERIFY ALL FIELD CONDITIONS AND REVIEW LOCATIONS AND MOUNTING METHOD OF EACH SIGN WITH THE ENGINEER PRIOR TO PREPARATION OF SHOP DRAWINGS AND FABRICATION OF SIGNS.

COLOR KEY:

C-1: BLACK, FED-STD CHIP NO. 27038 STANDARD SAFETY SIGN LETTERING, GRAPHICS.

C-2: OSHA SAFETY BLUE, FED-STD 595 CHIP NO. 15092 SPECIALIZED INDUSTRIAL SAFETY SIGN GRAPHIC BACKGROUND.

C-3: NOT USED.

C-4: PANTONE PROCESS BLUE C, BART LOGO

C-5: PANTONE #2747 BLUE

LOCATION:

THE PROJECT IDENTIFICATION/GENERAL CONSTRUCTION SIGN SHALL BE PLACED AT A LOCATION APPROVED BY THE ENGINEER.

CONTRACTOR TO SUBMIT FIELD OFFICE SIGN LOCATION TO THE ENGINEER FOR APPROVAL.

NOTE:

REFER TO CONTRACT SPECIFICATIONS SECTIONS 01 57 00 TEMPORARY CONTROLS AND 01 58 00 PROJECT IDENTIFICATION, FOR SIGNAGE REQUIREMENTS.

REV.	DATE	BY	SUB	APP.	DESCRIPTION
P	20260518				ISSUED FOR BID

DESIGNED: R. LEE
DRAWN: E. RODRIGUEZ
CHECKED: R. LEE
APPROVED: R. LEE
DATE:

LICENSED ARCHITECT RAYMOND LEE C 30458 EXP. 9-30-27 STATE OF CALIFORNIA

SAN FRANCISCO BAY AREA RAPID TRANSIT DISTRICT

PGH WONG ENGINEERING, INC. — SUBMITTED

PGH WONG ENGINEERING, INC. — APPROVED

COLISEUM STATION ELEVATOR MODERNIZATION

PROJECT IDENTIFICATION AND GENERAL CONSTRUCTION SIGNAGE

CADD FILENAME: 15NL-140- A701
SIZE: D
SCALE: 1-1/2"=1'-0"
CONTRACT NO.: 15NL-140
REV.: P
CONTRACT SHEET NO.: A701
PAGE NO.: 019

20190918

PLOTTED: May 05, 2026 - 2:49pm, D:\Bart\15NL-140 Elevator Modernization\3 Working (Designs)\A Architectural\A1 CADD\15NL-140-A701 CONSTRUCTION SIGNAGE.dwg

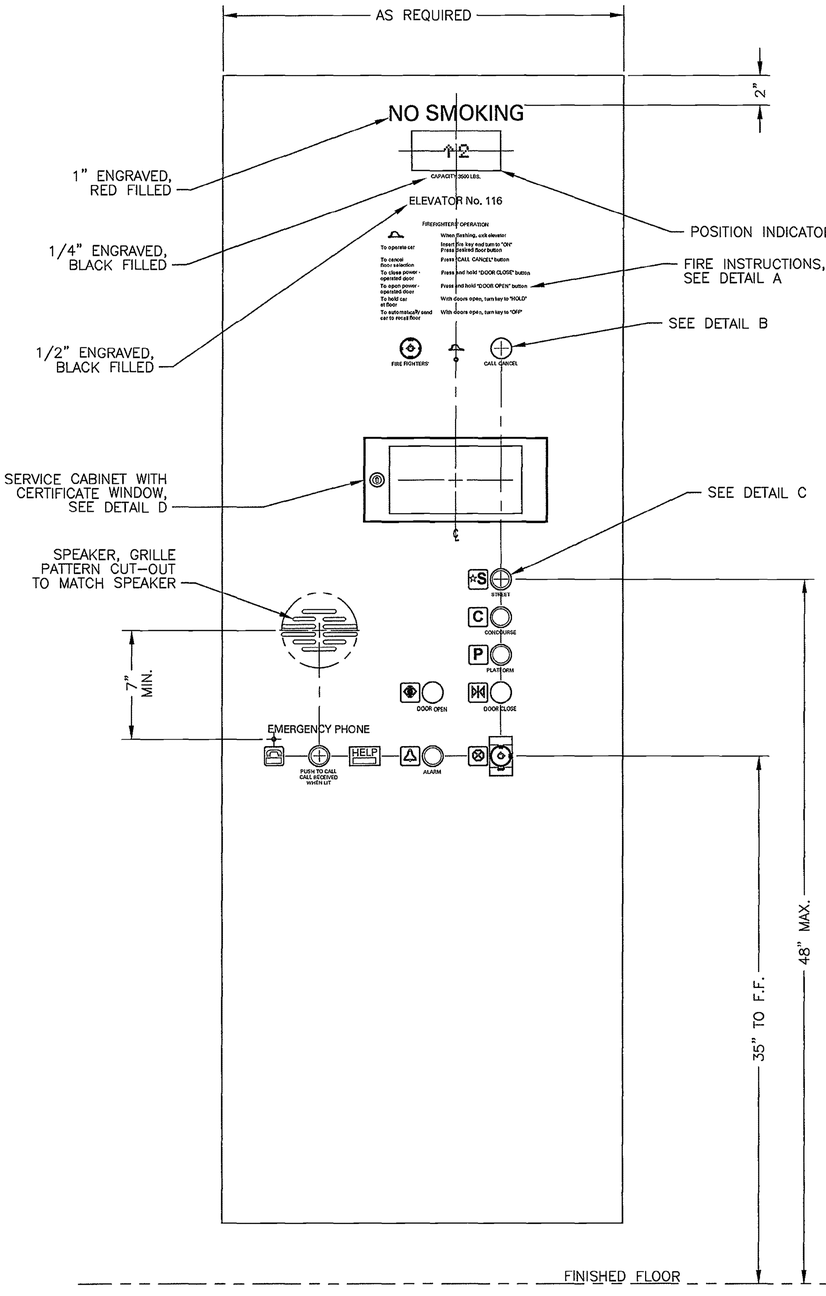

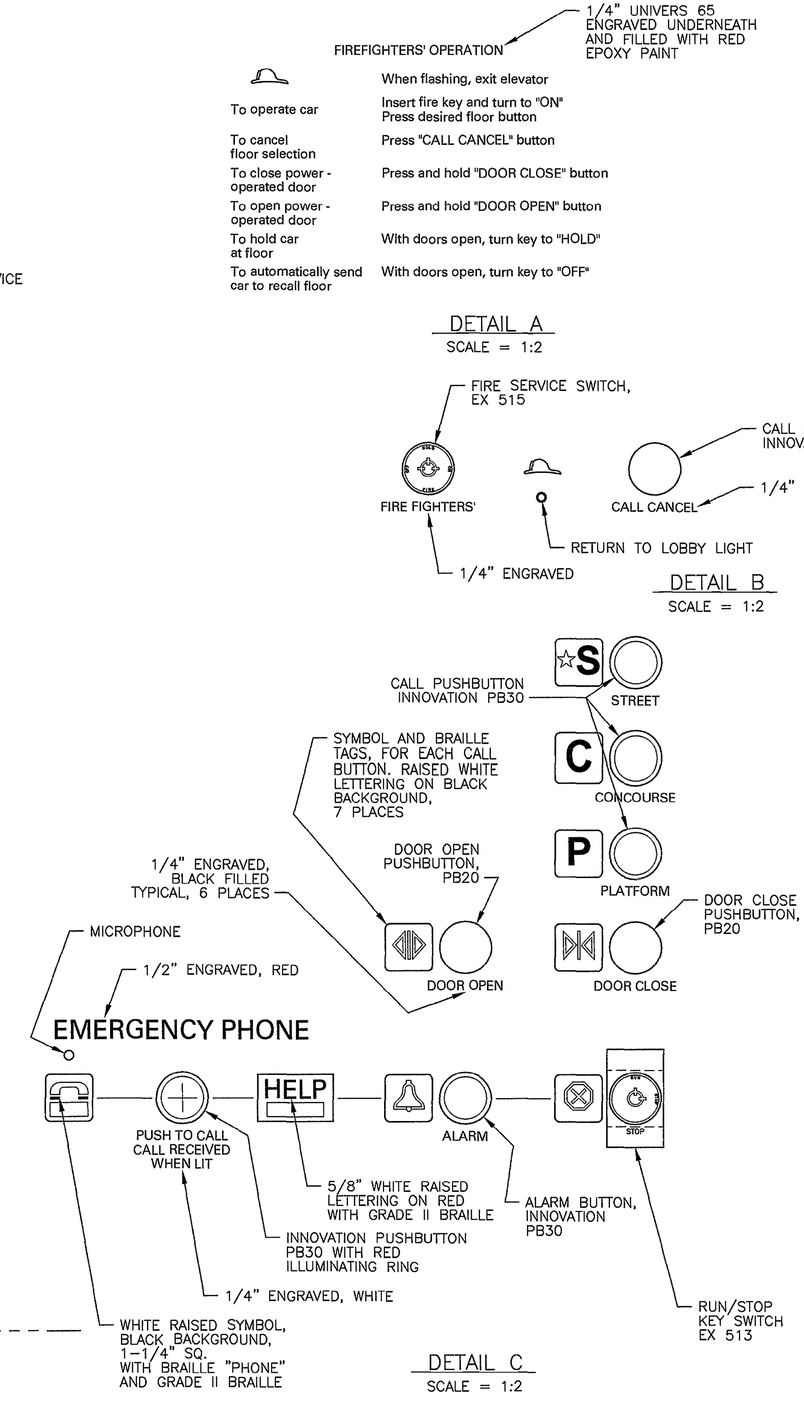

SERVICE CABINET WITH CERTIFICATE SHOULD INCLUDE:

1. MOTION SENSOR KEY SWITCH, EX 513
2. INDEPENDENT SERVICE KEY SWITCH, EX 513
3. CAB LIGHT KEY SWITCH, EX 513
4. FOR TRACTION ELEVATORS ONLY – EMERGENCY EXIT KEY SWITCH, EX 514
5. INSPECTION KEY OPERATED SWITCH, EX 514
6. TWO SPEED FAN KEY SWITCH, EX 513
7. EMERGENCY LIGHT TEST MOMENTARY PUSHBUTTON SWITCH
8. GFIC DUPLEX CONVENIENCE OUTLET

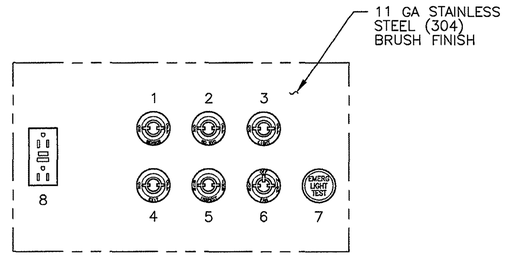

SERVICE CABINET SUBPLATE AND SIDE MOUNTING PIECES

MOUNTED BEHIND LOCKED DOOR

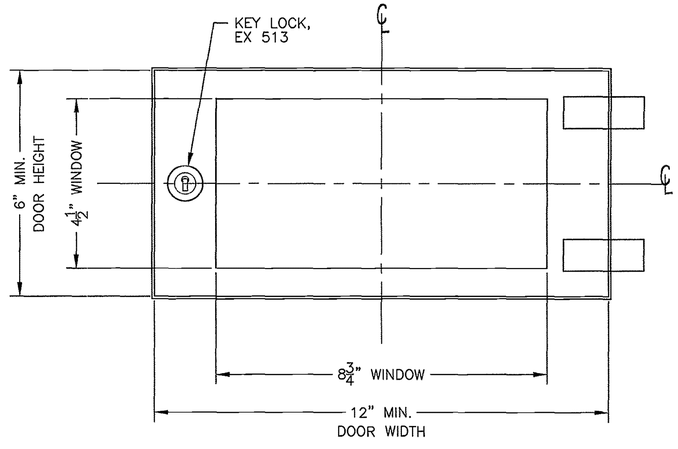

SERVICE CABINET WITH CERTIFICATE WINDOW

DETAIL D

SCALE = 1:2

REV.	DATE	BY	CHKD.	APP.	DESCRIPTION
01	01/06	BA	[illegible]	[illegible]	REVISED PER BECO EM001430

THIS DRAWING IS INTENDED SOLELY FOR BART USE IN ORDER TO DESIGN, CONSTRUCT, ALTER, OR MAINTAIN ITS FACILITIES. BART DOES NOT RECOMMEND OR WARRANT USE OF THE DRAWING FOR ANY OTHER PURPOSE. USE OF THE DRAWING BEYOND THE INTENDED PURPOSE WILL BE AT USER'S OWN RISK.

ORIGINAL DRAWING BEARS THE REGISTERED ARCHITECT SEAL NO.: 25072 AND SIGNATURE OF: TIAN A. FENG

BART

DESIGNED: BATC	DATE: 03/94	
DRAWN: Eymbue	01/06	
CHECKED: [signature]	01/06	
APPROVED: [signature]	1-06	

BART FACILITIES STANDARD ARCHITECTURAL

ELEVATOR CAR
OPERATING PANEL DETAILS

REF. NO.	
SIZE: D	SCALE: NOTED
CONTRACT: 15NL-140	REV.: 01
SHEET NO.: AS08	PG. NO.: 020

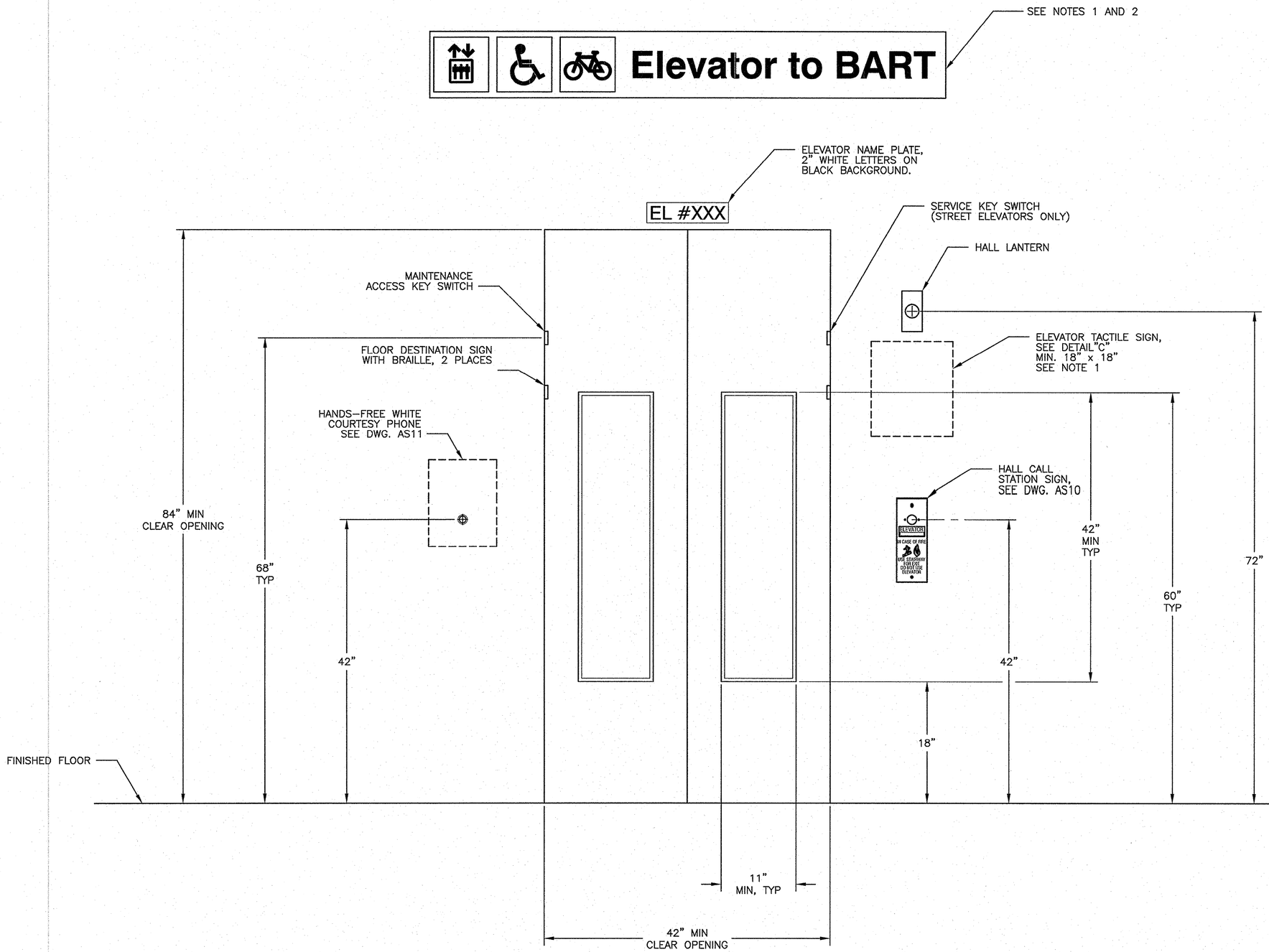

NOTES:

1. THIS SIGN IS REQUIRED IN STATION ELEVATORS ONLY.
2. AT PLATFORM ELEVATOR ENTRANCE, SIGN SHALL READ "ELEVATOR".

REV.	DATE	BY	CHKD.	APP.	DESCRIPTION
00	09/08	GL	MP	MAP	DRAWN PER BECO EM001368

THIS DRAWING IS INTENDED SOLELY FOR BART USE IN ORDER TO DESIGN, CONSTRUCT, ALTER, OR MAINTAIN ITS FACILITIES. BART DOES NOT RECOMMEND OR WARRANT USE OF THE DRAWING FOR ANY OTHER PURPOSE. USE OF THE DRAWING BEYOND THE INTENDED PURPOSE WILL BE AT USER'S OWN RISK.

REGISTERED PROFESSIONAL ENGINEER MARK ALAN PFEIFFER No. E014904 Exp. 6/30/09 ELECTRICAL STATE OF CALIFORNIA

BART

		DATE:
DESIGNED:		
DRAWN:	G. Lee	09/08
CHECKED:		09/08
APPROVED:		09/08

BART FACILITIES STANDARDS
ARCHITECTURAL
ELEVATOR DETAILS

ENTRANCE

REF. NO.

SIZE: D | SCALE

CONTRACT **15NL-140** | REV. **00**

SHEET NO. **AS09** | PG. NO. **021**

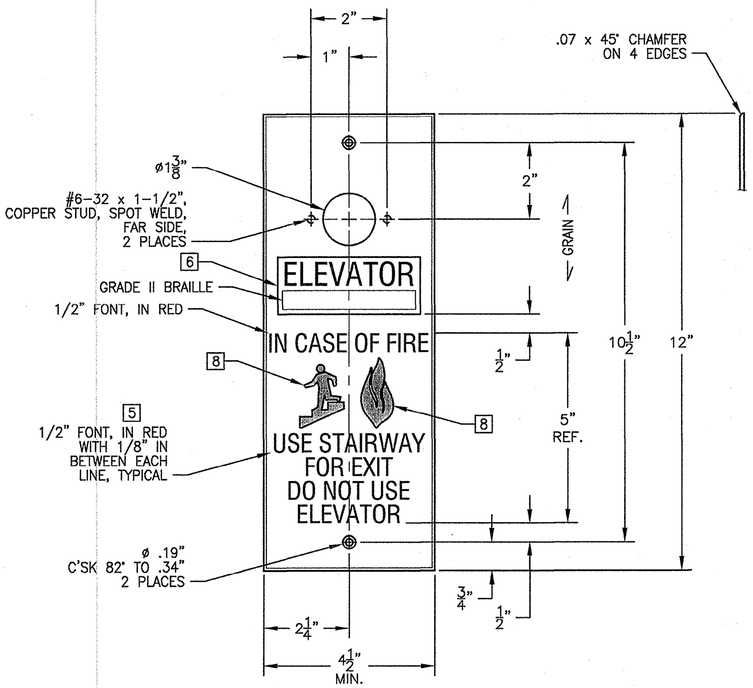

TOP OR BOTTOM LEVEL

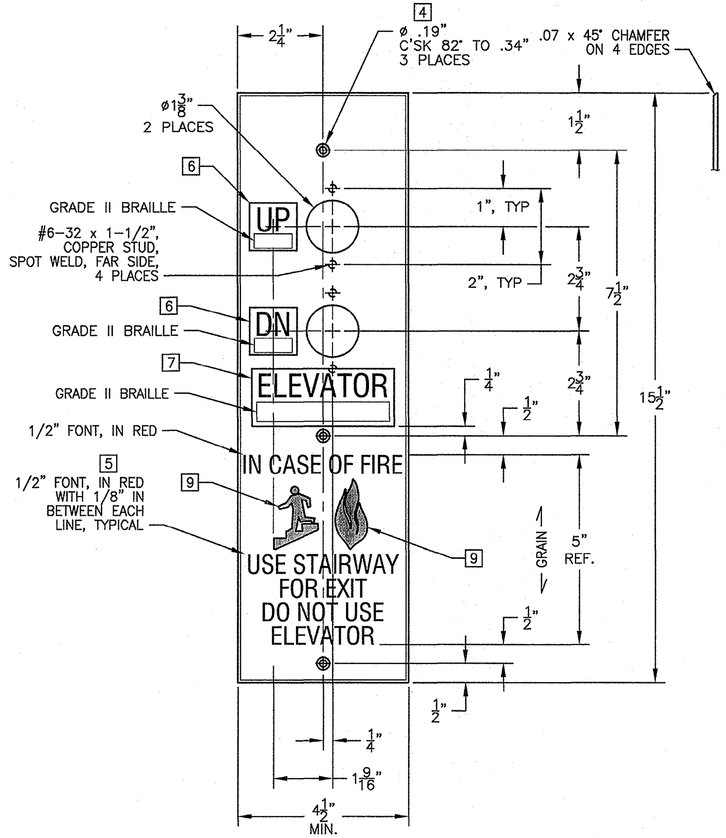

INTERMEDIATE LANDING

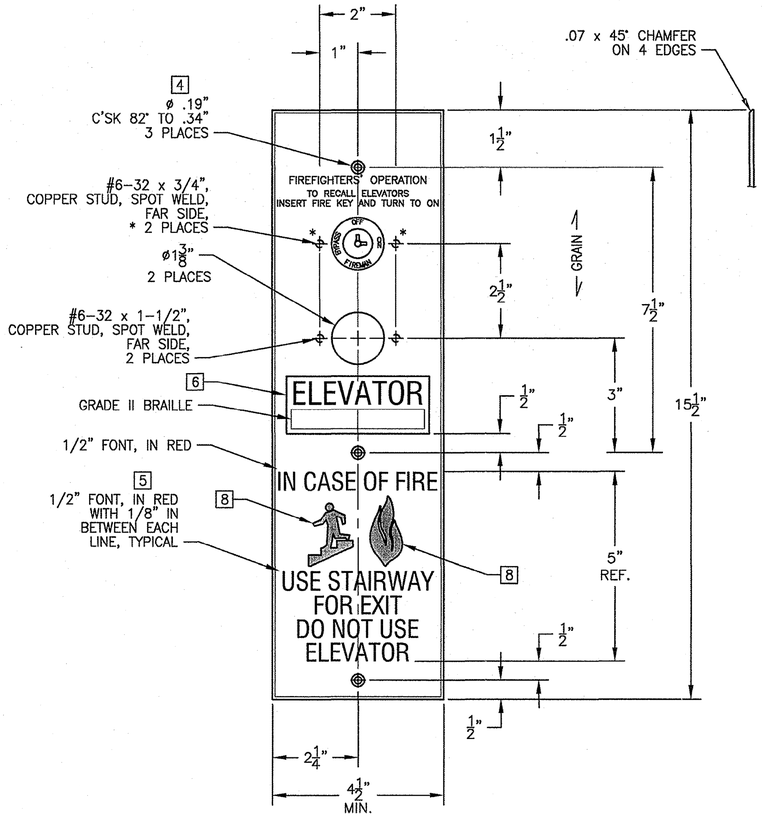

BUILDING EXIT LEVEL

NOTES:

1. MATERIAL: 12 GAUGE #4 BRUSHED 304 STAINLESS STEEL.
2. DEBURR AND BREAK SHARP EDGES.
3. PUSH-BUTTON, BRAILLE PLATE, PICTORIAL SYMBOLS AND WORD ENGRAVING SHALL BE ADA COMPLIANT.

[4] PROVIDE STAINLESS STEEL, OVAL HEAD, SPANNER DRILLED TAMPER PROOF, #8-32 x 3/4" SCREWS AND TINNERMAN HEAVY DUTY RATED SCREW CLIPS.

[5] ENGRAVED TEXT TO REMAIN CLEAR OF ALL HOLES.

[6] RECESSED BRAILLE PLATE SHALL BE 1-1/4" SQUARE WITH 5/8" WHITE RAISED CHARACTERS COPY 22 GAUGE THICK, ON POWDER EPOXY BLACK BACKGROUND, 20 MIL FULL BACK 3M VHB ADHESIVE AND FLUSH WITH SURFACE OF FACE PLATE.

[7] RECESSED BRAILLE PLATE SHALL BE 1-1/2" x 3-3/4" WITH 5/8" WHITE RAISED CHARACTERS COPY 22 GAUGE THICK, ON POWDER EPOXY BLACK BACKGROUND, 20 MIL FULL BACK 3M VHB ADHESIVE AND FLUSH WITH SURFACE OF FACE PLATE.

8 TWO INNOVATION PB30 BUTTONS ARE NOT INCLUDED.

[9] ENGRAVED PICTORIAL SYMBOLS IN RED.

REV.	DATE	BY	CHKD.	APP.	DESCRIPTION
00	09/08	GL		mnd	DRAWN PER BECO EM001368

THIS DRAWING IS INTENDED SOLELY FOR BART USE IN ORDER TO DESIGN, CONSTRUCT, ALTER, OR MAINTAIN ITS FACILITIES. BART DOES NOT RECOMMEND OR WARRANT USE OF THE DRAWING FOR ANY OTHER PURPOSE. USE OF THE DRAWING BEYOND THE INTENDED PURPOSE WILL BE AT USER'S OWN RISK.

REGISTERED PROFESSIONAL ENGINEER MARK ALAN PRETTYMAN No. E01490 Exp. 06/30/09 ELECTRICAL STATE OF CALIFORNIA

BART

DESIGNED:		DATE:
DRAWN:	G. Lee	09/08
CHECKED:		09/08
APPROVED:		09.08

BART FACILITIES STANDARDS ARCHITECTURAL ELEVATOR DETAILS

ELEVATOR HALL CALL DETAILS

REF. NO.

SIZE: D | SCALE

CONTRACT **15NL-140** | REV. **00**

SHEET NO. **AS10** | PG. NO. **022**

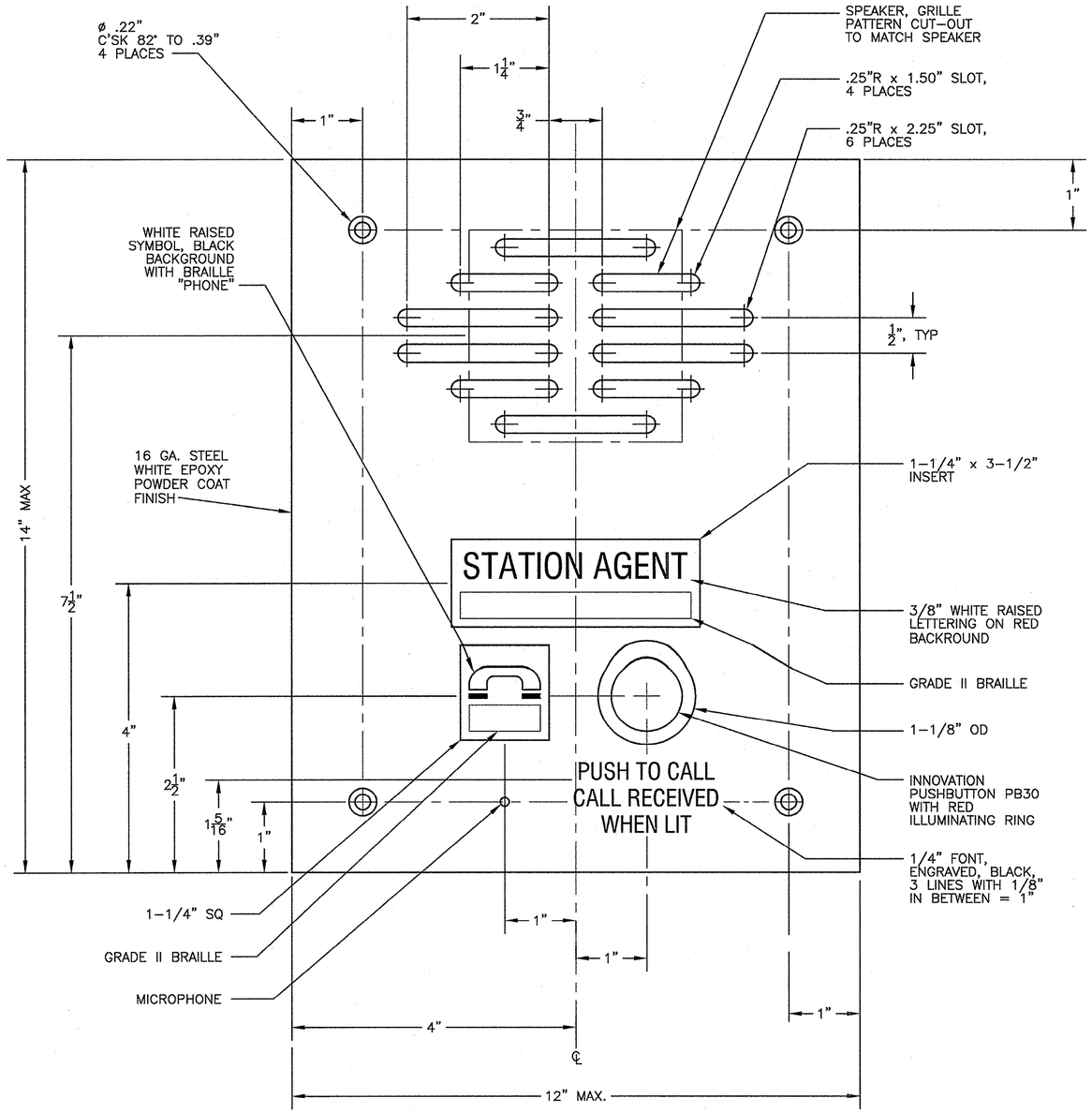

WHITE COURTESY PHONE

NOTE:

1. SLIGHT VARIATION IN COMPONENT LOCATION TO ALLOW FOR PHYSICAL CLEARANCES ARE ACCEPTABLE.

REV.	DATE	BY	CHKD.	APP.	DESCRIPTION
00	09/08	GL	MP	MP	DRAWN PER BECO EM001368

THIS DRAWING IS INTENDED SOLELY FOR BART USE IN ORDER TO DESIGN, CONSTRUCT, ALTER, OR MAINTAIN ITS FACILITIES. BART DOES NOT RECOMMEND OR WARRANT USE OF THE DRAWING FOR ANY OTHER PURPOSE. USE OF THE DRAWING BEYOND THE INTENDED PURPOSE WILL BE AT USER'S OWN RISK.

REGISTERED PROFESSIONAL ENGINEER — MARK ALAN PFEIFFER — No. E014904 Exp. 6-30-09 — ELECTRICAL — STATE OF CALIFORNIA

BART

		DATE:
DESIGNED:	BART	
DRAWN:	G. Lee	09/08
CHECKED:	M. M	09/08
APPROVED:		09-08

BART FACILITIES STANDARDS
ARCHITECTURAL
ELEVATOR DETAILS

WHITE COURTESY PHONE DETAILS

REF. NO.

SIZE: D | SCALE: 1:1

CONTRACT: **15NL-140** | REV.: **00**

SHEET NO.: **AS11** | PG. NO.: **023**

SHEET KEYNOTES:

1. 3" PD SUSPENDED BELOW PLATFORM. SEE DWG P403.
2. PROVIDE SEISMIC LOOP IN 3" PD, METRAFLEX MODEL MLUTFM160300 OR EQUAL, FOR +/- 8" MOVEMENT IN ALL DIRECTIONS. INSTALL PER MANUFACTURER'S REQUIREMENTS W/SEISMIC BREAKAWAY HANGER TO SUPPORT LOOP. SEE 3/P403.

GENERAL SHEET NOTES:

1. PIPE HANGERS, SUPPORTS, SEISMIC RESTRAINTS, ANCHORAGES AND REINFORCEMENTS SHALL BE PROVIDED IN ACCORDANCE WITH BFS STANDARD SPECIFICATIONS SECTIONS 20 20 13. CONTRACTOR SHALL SUBMIT SEISMIC CALCULATIONS WITH SHOP DRAWINGS IN ACCORDANCE WITH BFS STANDARD SPECIFICATIONS SECTION 20 30 13.
2. PRIOR TO CORE DRILLING AND INSTALLING NEW PIPE HANGERS, SUPPORTS, SEISMIC RESTRAINTS, ANCHORAGES AND REINFORCEMENTS, CONTRACTOR SHALL SCAN EXISTING CONCRETE INCLUDING AERIAL STRUCTURE TO LOCATE REINFORCING BARS & POST TENSION STRANDS. SHOULD REINFORCING BARS OR POST TENSION STRANDS BE FOUND IN AREAS OF WORK CONTRACTOR SHALL LOCATE CORE DRILLS, HANGERS, SUPPORTS, SEISMIC RESTRAINTS, AND ANCHORAGES AS REQUIRED TO PROTECT EXISTING REINFORCING BARS AND POST TENSION STRANDS AND ADJUST FINAL PIPING LAY-OUT AS NECESSARY.

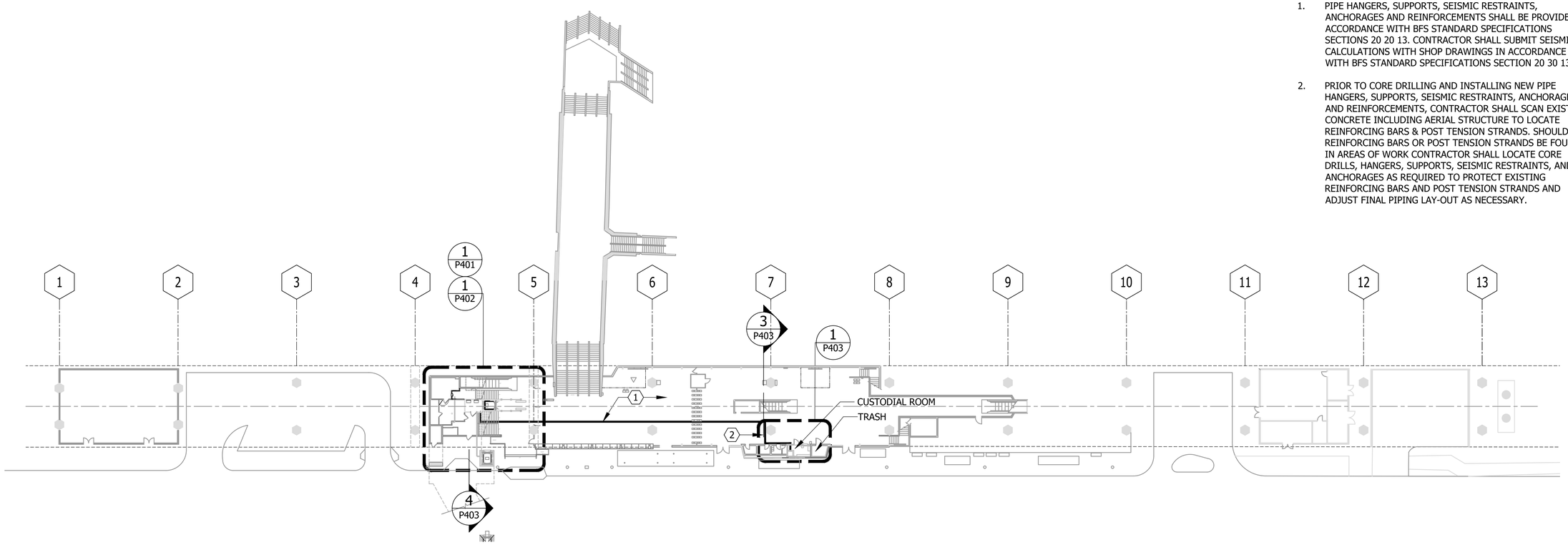

OVERALL PLUMBING PLAN
CONCOURSE LEVEL

SCALE: 1/32" = 1'-0"

1 / P101

0 16' 32' 64' 96'

GRAPHIC SCALE

RN

N

REV.	DATE	BY	SUB	APP.	DESCRIPTION
P	20260518				ISSUED FOR BID

DESIGNED: R. WELLS
DRAWN: E. RODRIGUEZ
CHECKED: B. BRAUER
APPROVED: R. WELLS
DATE: 20190918

REGISTERED PROFESSIONAL ENGINEER — RICHARD H. WELLS — 18395 — EXP. 09-30-27 — STATE OF CALIFORNIA

Richard H. Wells

SAN FRANCISCO BAY AREA RAPID TRANSIT DISTRICT

PGH WONG ENGINEERING, INC. — SUBMITTED

PGH WONG ENGINEERING, INC. — APPROVED

COLISEUM STATION ELEVATOR MODERNIZATION

OVERALL PLUMBING PLAN
CONCOURSE LEVEL

CADD FILENAME: 15NL-140-P101
SIZE: D
SCALE: 1/32" = 1'-0"
CONTRACT NO.: 15NL-140
REV.: P
CONTRACT SHEET NO.: P101
PAGE NO.: 024

creationdate: May 06, 2026 - 10:44am Y:\BF&S\15-1400 Elevator Modernization\7.0 Working (Design)\7.5 Mech Plumb ER\7.5.1 CAD\3d\see plan\15NL-140_P101.dwg

SHEET KEYNOTES:

1. REMOVE (E) SUMP PUMP.
2. REMOVE (E) 1-1/2" PUMP DISCHARGE PIPE IN ELEV. #3 PIT AND NEAR CEIL. IN (E) EMR & CAP (E) CONNECTION TO 4" SD.
3. REMOVE (E) 1-1/2" PUMP DISCHARGE PIPE IN ELEV. #30 PIT AND THRU WALL TO DAYLIGHT AT SIDEWALK. PATCH SHAFT WALL TO MATCH EXISTING.

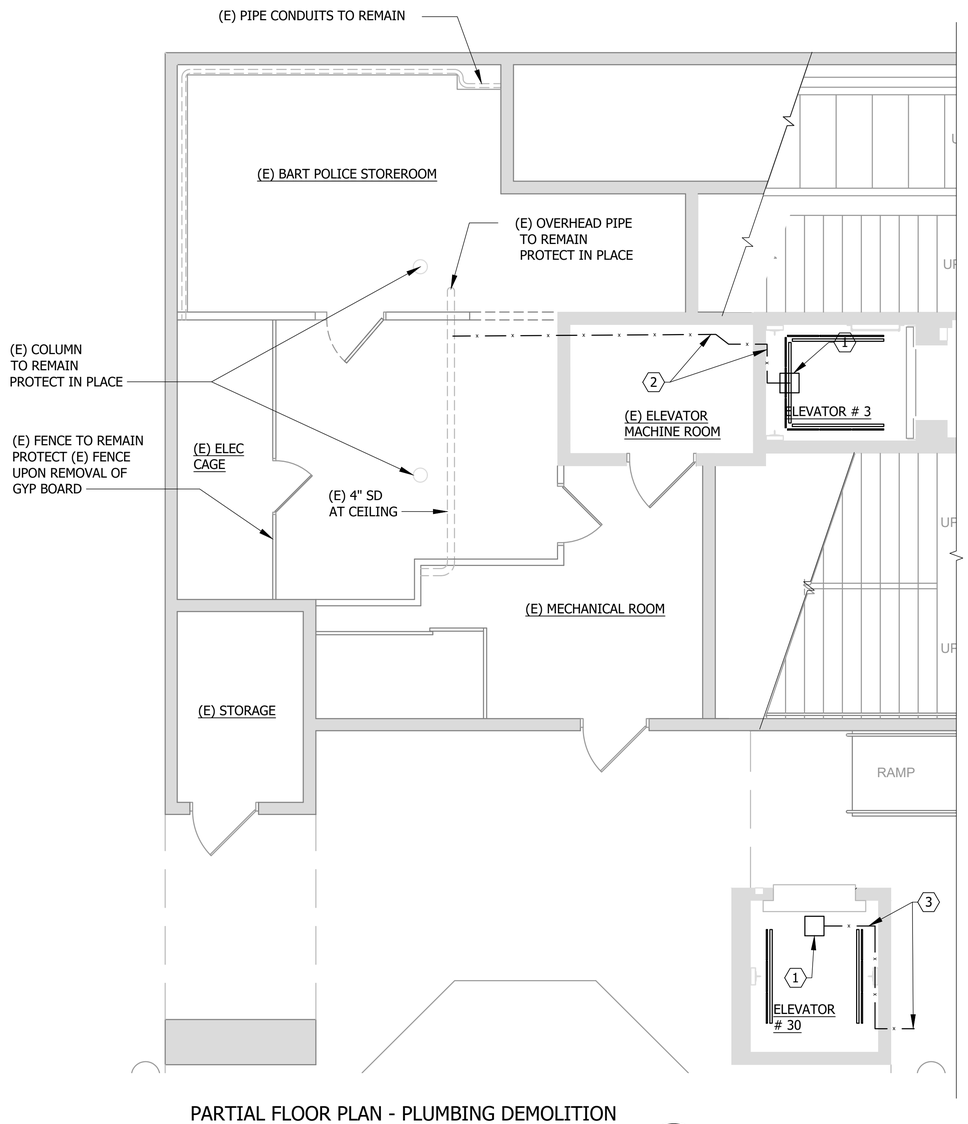

PARTIAL FLOOR PLAN - PLUMBING DEMOLITION
CONCOURSE LEVEL

SCALE: 1/4" = 1'-0"

1 / P401 P101

0 1' 2' 4' 8'

GRAPHIC SCALE

RN
N

REV.	DATE	BY	SUB	APP.	DESCRIPTION
P	20260518				ISSUED FOR BID

DESIGNED: R. WELLS
DRAWN: E. RODRIGUEZ
CHECKED: B. BRAUER
APPROVED: R. WELLS
DATE: 20190918

REGISTERED PROFESSIONAL ENGINEER — RICHARD H. WELLS — No. 18985 — 09-30-27 — STATE OF CALIFORNIA

Richard H. Wells

SAN FRANCISCO BAY AREA RAPID TRANSIT DISTRICT

PGH WONG ENGINEERING, INC. — SUBMITTED

PGH WONG ENGINEERING, INC. — APPROVED

COLISEUM STATION ELEVATOR MODERNIZATION

PARTIAL FLOOR PLAN - PLUMBING DEMOLITION
CONCOURSE LEVEL

CADD FILENAME: 15NL-140-P401
SIZE: D | SCALE: 1/4" = 1'-0"
CONTRACT NO.: 15NL-140 | REV.: P
CONTRACT SHEET NO.: P401 | PAGE NO.: 025

May 06, 2026 - 10:46am K:\BB450-1400 Elevator Modernization\7.0 Working (Design)\7.5 Mech Plumb FP\7.5.1 CAD\3xxx plan\15NL-140_P401.dwg

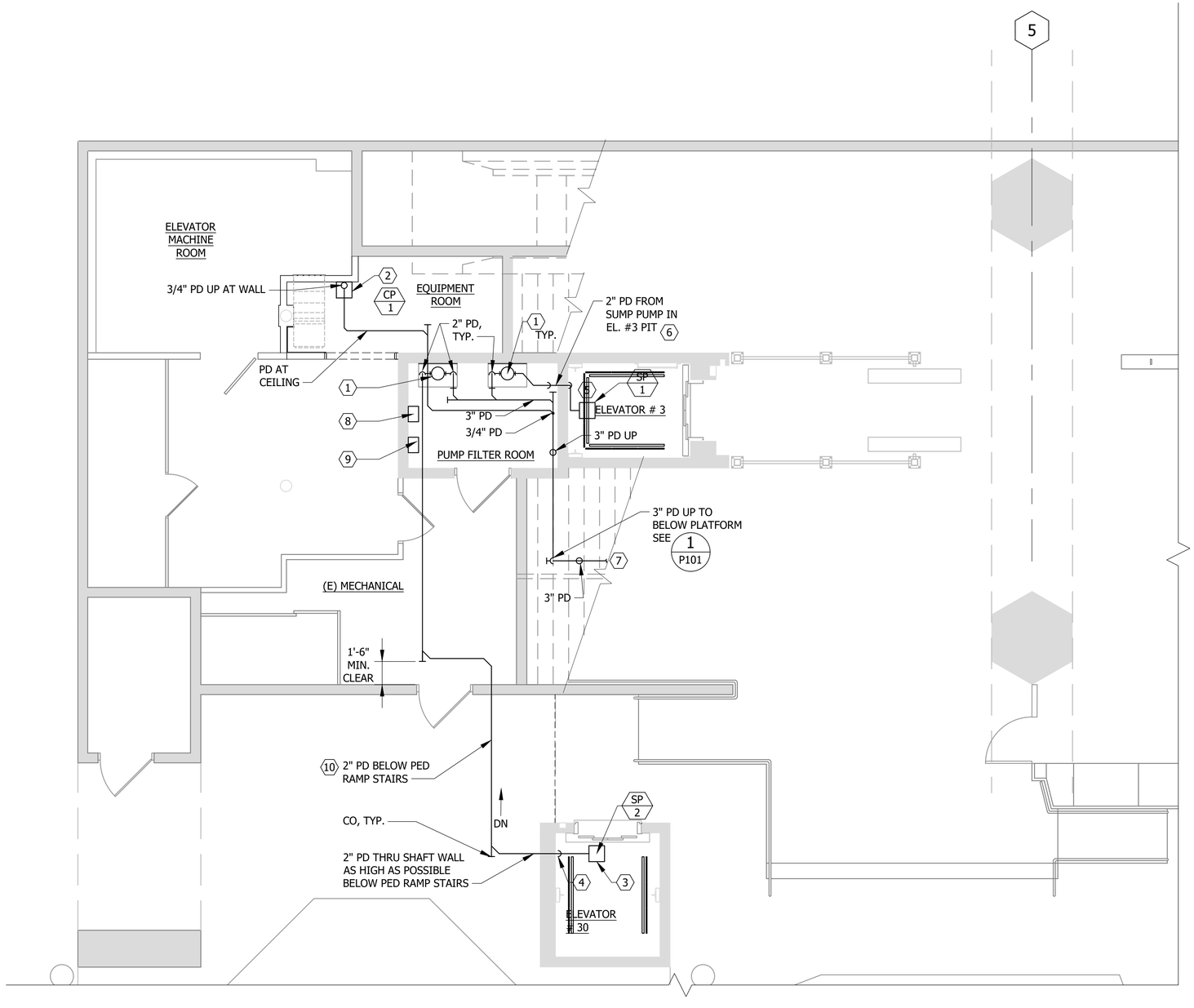

PARTIAL FLOOR PLAN - PLUMBING 1
SCALE: 1/4" = 1'-0" P402 P101

SHEET KEYNOTES:

1. ELEV. SUMP WATER FILTERS. INSTALL AT FLOOR ON 18"D X 30"L X 4" CONC. PAD, TYP. SEE DWG P602 AND DETAILS 5 AND 6 ON DWG A502.
2. CONDENSATE PUMP(CP-1) FOR AIR HANDLING UNIT (ACU-1) ON FLOOR. PROVIDE CHECK VALVE AND SHUT-OFF BALL VALVE IN DISCHARGE PIPE AT PUMP.
3. INSTALL NEW SUMP PUMP (SP-2) IN ELEV. #30 PIT. PIT DIM: 18"X18"X19 1/2" DEEP.
4. INSTALL NEW 2" PUMP DISCHARGE LINE W/ PUMP ISOL. VALVE & CHECK VALVE. SEE DWG P602.
5. INSTALL NEW SUMP PUMP (SP-1) IN ELEV. #3 PIT. PIT DIM: 12"X12"X12" DEEP.
6. INSTALL NEW 2" PUMP DISCHARGE LINE W/ PUMP ISOL. VALVE & CHECK VALVE. SEE DWG P602. INSTALL THRU EXIST. WALL OPENING TO BE ENLARGED AS NECESSARY.
7. 3" PD TO CUSTODIAL ROOM IN CONCOURSE PAID AREA. SEE DWG P403.
8. SUMP PUMP SP-1 CONTROL/ALARM PANEL ON WALL @ 5 FT. AFF. SEE DWG P602.
9. SUMP PUMP SP-2 CONTROL/ALARM PANEL ON WALL @ 5 FT. AFF. SEE DWG P602.
10. COORDINATE PIPE INSTALLATION WITH FIRE SPRINKLER SUPPLY. SEE DWG F401, AND ARCHITECTURAL DRAWING A502 FOR COVER DETAIL.

GENERAL SHEET NOTES:

1. PIPE HANGERS, SUPPORTS, SEISMIC RESTRAINTS, ANCHORAGES AND REINFORCEMENTS SHALL BE PROVIDED IN ACCORDANCE WITH BFS STANDARD SPECIFICATIONS SECTIONS 20 20 13. CONTRACTOR SHALL SUBMIT SEISMIC CALCULATIONS WITH SHOP DRAWINGS IN ACCORDANCE WITH BFS STANDARD SPECIFICATIONS SECTION 20 30 13.
2. PRIOR TO CORE DRILLING AND INSTALLING NEW PIPE HANGERS, SUPPORTS, SEISMIC RESTRAINTS, ANCHORAGES AND REINFORCEMENTS, CONTRACTOR SHALL SCAN EXISTING CONCRETE INCLUDING AERIAL STRUCTURE TO LOCATE REINFORCING BARS & POST TENSION STRANDS. SHOULD REINFORCING BARS OR POST TENSION STRANDS BE FOUND IN AREAS OF WORK CONTRACTOR SHALL LOCATE CORE DRILLS, HANGERS, SUPPORTS, SEISMIC RESTRAINTS, AND ANCHORAGES AS REQUIRED TO PROTECT EXISTING REINFORCING BARS AND POST TENSION STRANDS AND ADJUST FINAL PIPING LAY-OUT AS NECESSARY.

0 1' 2' 4' 8'
GRAPHIC SCALE

RN
N

REV.	DATE	BY	SUB	APP.	DESCRIPTION
P	20260518				ISSUED FOR BID

DESIGNED: R. WELLS
DRAWN: E. RODRIGUEZ
CHECKED: B. BRAUER
APPROVED: R. WELLS
DATE: 20190918

REGISTERED PROFESSIONAL ENGINEER RICHARD H. WELLS 18385 ISSUED 09-30-27 STATE OF CALIFORNIA
Richard H. Wells

SAN FRANCISCO BAY AREA RAPID TRANSIT DISTRICT

PGH WONG ENGINEERING, INC. — SUBMITTED
PGH WONG ENGINEERING, INC. — APPROVED

COLISEUM STATION ELEVATOR MODERNIZATION

PARTIAL FLOOR PLAN - PLUMBING
CONCOURSE LEVEL

CADD FILENAME: 15NL-140-P402
SIZE: D | SCALE: 1/4" = 1'-0"
CONTRACT NO.: 15NL-140 | REV.: P
CONTRACT SHEET NO.: P402 | PAGE NO.: 026

Plotted: Nov 05, 2025 - 10:15am | G:\Projects\15NL-140\Elevator Modernization\2 Working Drawings\2.2 Mech Plumb\P402 P 15NL-140 P402.dwg

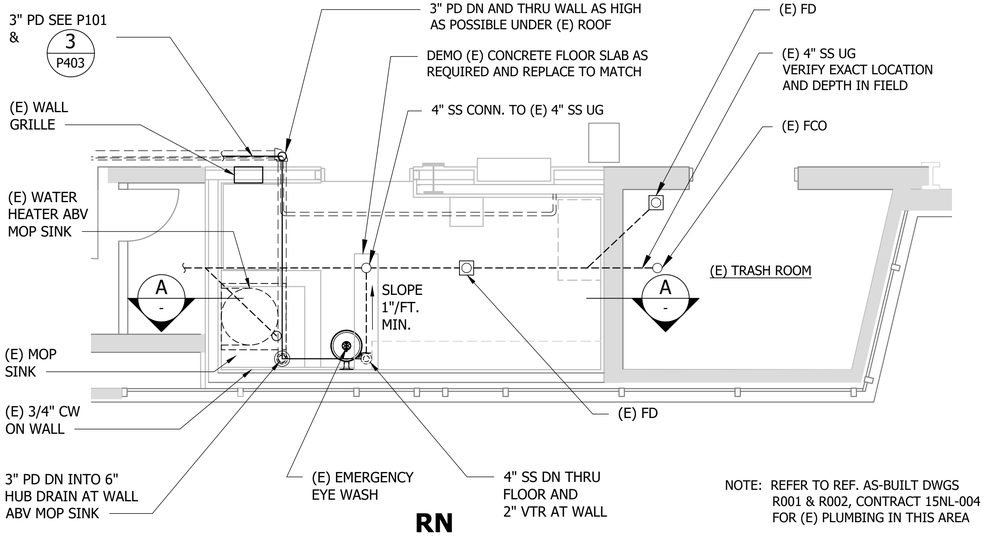

NOTE: REFER TO REF. AS-BUILT DWGS R001 & R002, CONTRACT 15NL-004 FOR (E) PLUMBING IN THIS AREA

0 1' 5' 10'

GRAPHIC SCALE

RN N

CUSTODIAL ROOM - PLUMBING 1 P403 P101

SCALE: 3/8" = 1'-0"

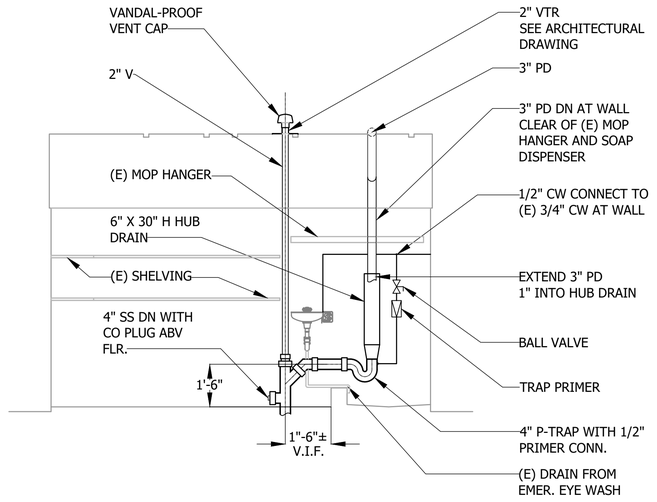

CUSTODIAL ROOM INTERIOR ELEVATION A P403

SCALE: 3/8" = 1'-0"

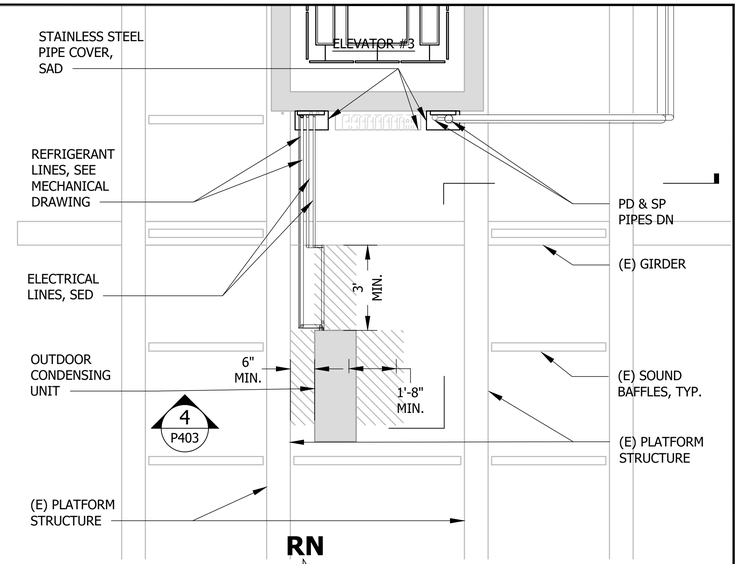

0 1' 5' 10'

GRAPHIC SCALE

RN N

REFLECTED CEILING PLAN 2 P403

SCALE: 3/8" = 1'-0"

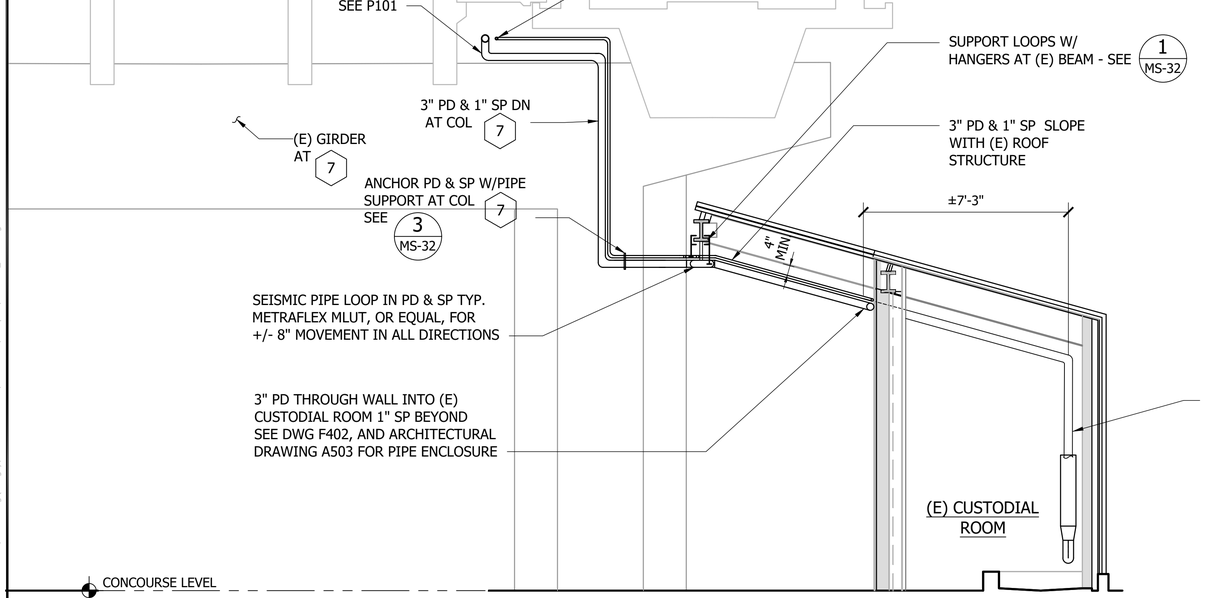

CROSS SECTION AT CUSTODIAL ROOM 3 P403 F402

SCALE: 3/8" = 1'-0"

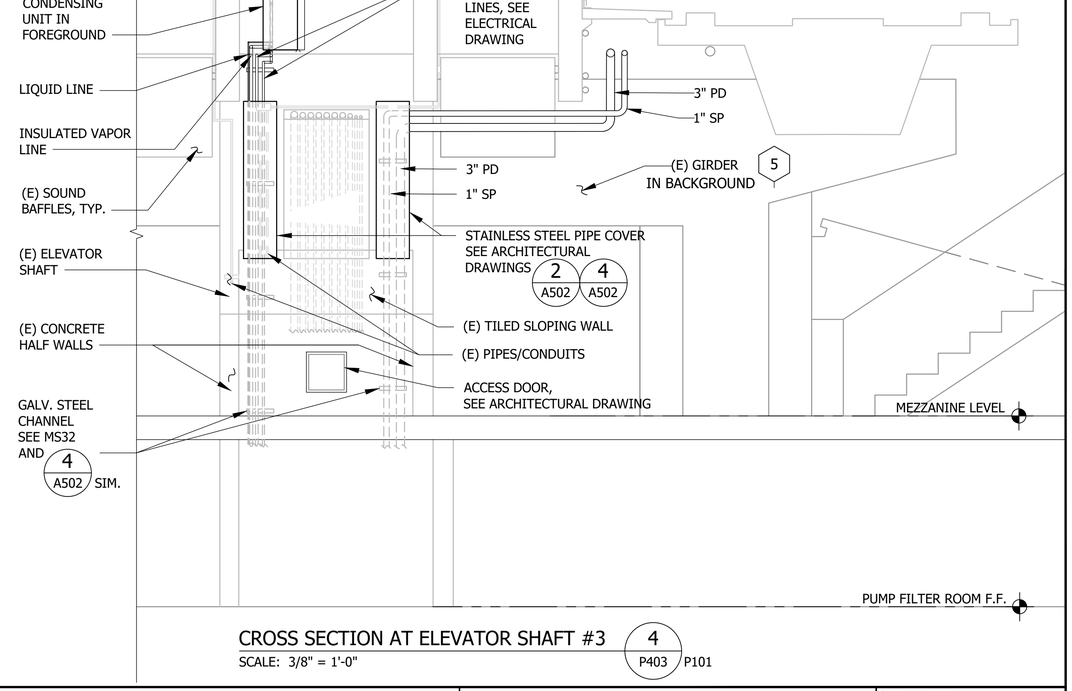

CROSS SECTION AT ELEVATOR SHAFT #3 4 P403 P101

SCALE: 3/8" = 1'-0"

REV.	DATE	BY	SUB	APP.	DESCRIPTION
P	20260518				ISSUED FOR BID

DESIGNED: R. WELLS
DRAWN: E. RODRIGUEZ
CHECKED: B. BRAUER
APPROVED: R. WELLS
DATE: 20190918

REGISTERED PROFESSIONAL ENGINEER RICHARD H. WELLS 18395 EXP. 09-30-21 STATE OF CALIFORNIA

Richard H. Wells

SAN FRANCISCO BAY AREA RAPID TRANSIT DISTRICT

PGH WONG ENGINEERING, INC. — SUBMITTED

PGH WONG ENGINEERING, INC. — APPROVED

COLISEUM STATION ELEVATOR MODERNIZATION

PARTIAL FLOOR & REFLECTED CEILING PLAN
INTERIOR ELEVATION & CROSS SECTIONS
CONCOURSE & MEZZANINE LEVEL - PLUMBING

CADD FILENAME: 15NL-140-P403
SIZE: D | SCALE: 3/8" = 1'-0"
CONTRACT NO.: 15NL-140 | REV.: P
CONTRACT SHEET NO.: P403 | PAGE NO.: 027

onefiscover May 06, 2026 - 10:45am Y:\BE45\15-140 Elevator Modernization\7.0 Working (Design)\7.5 Mech Plumb ER\7.5.1 CAD\base plan\15NL-140_P403.dwg

SUMP PUMP SCHEDULE

EQUIPMENT NUMBER	BUILDING/ AREA SERVED	TYPE/SERVICE	CAPACITY GPM	TOTAL HEAD, FT.	RPM MAX	PUMP MIN % EFFICIENCY	ELECTRICAL		BASIS OF DESIGN PRODUCT
							MOTOR HP	VOLT-PH-HZ	
SP 1	ELEV. #3	SUBMERSIBLE SUMP PUMP.	50	63	3450	-	1-1/2	460-3-60	GOULDS WE 15H, OR EQUAL SEE NOTE 1, 2 & 3.
SP 2	ELEV. #30	SUBMERSIBLE SUMP PUMP.	50	63	3450	-	1-1/2	460-3-60	GOULDS WE 15H, OR EQUAL SEE NOTE 1, 2 & 3.
CP 1	ACU-1 (ELEV. MACHINE RM.)	CONDENSATE COLLECTION	1	40	-	-	1/5	115-1-60	LITTLE GIANT VCL- 45ULS, OR EQUAL. W/ 1 GAL. TANK.

NOTE:

1. PROVIDE WITH WARRICK CONTROLS, INC., SERIES 67 SIMPLEX PUMP CONTROLLER IN NEMA 4 ENCLOSURE WITH MAIN DISCONNECT/CIRCUIT BREAKER AND HAND-OFF-AUTOMATIC SWITCH (DISTRICT-DESIGNATED MATCHING PRODUCT).
2. PROVIDE WITH WARRICK 3W3 WIRE SUSPENDED PROBE TYPE LEVEL CONTROLS WITH PVC HOUSING AND 316 STAINLESS STEEL PROBE (DISTRICT-DESIGNATED MATCHING PRODUCT).
3. SEE DWG P602.

INDUSTRIAL WASTE OIL FILTER SCHEDULE

MARK	LOCATION	AREA SERVED	SYSTEM AND/OR SERVICE	TYPE	FLOW	MAXIMUM PRESSURE	INLET CONNECTION	OUTLET CONNECTION	HOUSING CONSTRUCTION	
					GPM	PSI	NPT	NPT		
OF 1	PUMP FILTER ROOM	ELEV. #3	SP.1 DISCHARGE	ABSORBING OIL FILTER	50	150	2"	2"	304SS	
OF 2	PUMP FILTER ROOM	ELEV. #30	SP.2 DISCHARGE	ABSORBING OIL FILTER	50	150	2"	2"	304SS	

NOTE:

1. SEE DWG P602.

REV.	DATE	BY	SUB	APP.	DESCRIPTION
P	20260518				ISSUED FOR BID

DESIGNED: R. WELLS
DRAWN: G.HEMMAT
CHECKED: B. BRAUER
APPROVED: R. WELLS
DATE: 20190918

REGISTERED PROFESSIONAL ENGINEER RICHARD H. WELLS 18395 EXP. 09-30-21 STATE OF CALIFORNIA

Richard H. Wells

SAN FRANCISCO BAY AREA RAPID TRANSIT DISTRICT

PGH WONG ENGINEERING, INC. — SUBMITTED

PGH WONG ENGINEERING, INC. — APPROVED

COLISEUM STATION ELEVATOR MODERNIZATION

EQUIPMENT SCHEDULES

CADD FILENAME: 15NL-140-P601
SIZE: D | SCALE: NONE
CONTRACT NO.: 15NL-140 | REV.: P
CONTRACT SHEET NO.: P601 | PAGE NO.: 028

Sep 17, 2026 - 1:33pm X:\86450-1400 Elevator Modernization\7.0 Working (Design)\7.5 Mech Plumb FP\7.5.1 CADD\base plan\15NL-140_P601.dwg
ChristopherGuerrero

A	FILTER HOUSING VESSEL
B	PUMP CONTROLLER SEE SUMP PUMP SCHEDULE DWG P601
C	GOULDS DISCHARGE PUMP SEE SUMP PUMP SCHEDULE DWG P601
D	**PUMP CONTROL SENSOR W/ MOUNTING BRACKETS /CLAMPS. SEE SUMP PUMP SCHEDULE DWG P601**

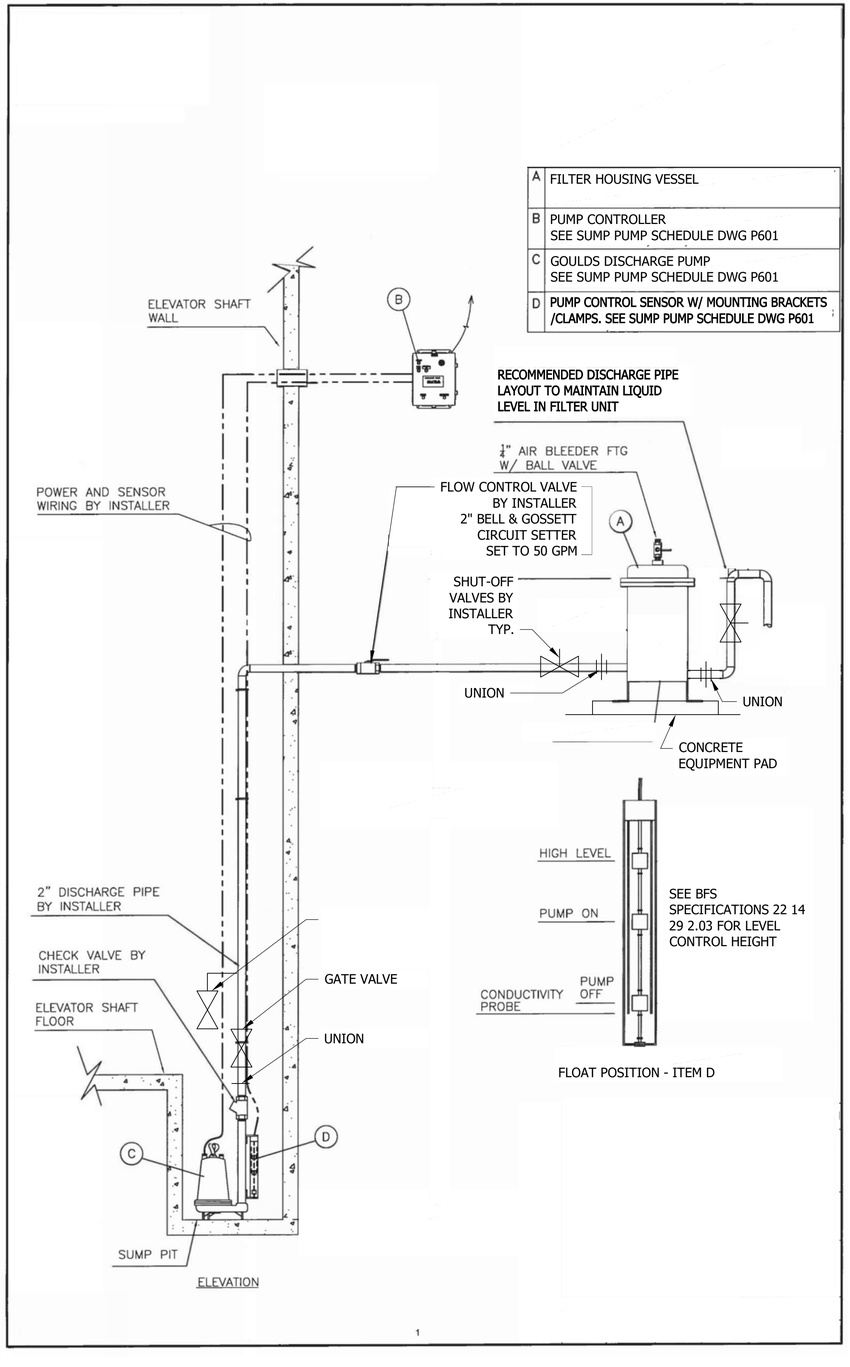

SUMP PUMP AND FILTER HOUSING PIPING ARRANGMENT

NOT TO SCALE

1
P602

REV.	DATE	BY	SUB	APP.	DESCRIPTION
P	20260518				ISSUED FOR BID

DESIGNED: R. WELLS
DRAWN: G.HEMMAT
CHECKED: B. BRAUER
APPROVED: R. WELLS
DATE: 20190918

REGISTERED PROFESSIONAL ENGINEER RICHARD H. WELLS 18885 ISSUED 09-30-27 STATE OF CALIFORNIA

Richard H. Wells

SAN FRANCISCO BAY AREA RAPID TRANSIT DISTRICT

PGH WONG ENGINEERING, INC. — SUBMITTED

PGH WONG ENGINEERING, INC. — APPROVED

COLISEUM STATION ELEVATOR MODERNIZATION

EQUIPMENT DETAILS

CADD FILENAME: 15NL-140-P602
SIZE: D | SCALE: AS SHOWN
CONTRACT NO.: **15NL-140** | REV.: **P**
CONTRACT SHEET NO.: **P602** | PAGE NO.: **029**

Plotted on: Oakland - Sep 17, 2026 - 11:17am Y:\BFS\15-1400 Elevator Modernization\7.0 Working (Design)\7.3 Mech Plumb (PM P & I Cad)\Sheet Files\15NL-140_P602.dwg

GENERAL SHEET NOTES:

1. EXISTING FIRE PROTECTION SERVICES ARE TO BE MAINTAINED OPERABLE AT ALL TIMES DURING CONSTRUCTION OR CONTRACTOR TO PROVIDE ALTERNATIVE FIRE PROTECTION SERVICES ACCEPTABLE TO BART AND LOCAL FIRE AUTHORITY
2. PIPE HANGERS, SUPPORTS, SEISMIC RESTRAINTS, ANCHORAGES AND REINFORCEMENTS SHALL BE PROVIDED IN ACCORDANCE WITH BFS STANDARD SPECIFICATIONS SECTIONS 20 20 13 AND 21 13 13. CONTRACTOR SHALL SUBMIT SEISMIC CALCULATIONS WITH SHOP DRAWINGS IN ACCORDANCE WITH BFS STANDARD SPECIFICATIONS SECTION 20 30 13.
3. PRIOR TO CORE DRILLING AND INSTALLING NEW PIPE HANGERS, SUPPORTS, SEISMIC RESTRAINTS, ANCHORAGES AND REINFORCEMENTS, CONTRACTOR SHALL SCAN EXISTING CONCRETE INCLUDING AERIAL STRUCTURE TO LOCATE REINFORCING BARS & POST TENSION STRANDS. SHOULD REINFORCING BARS OR POST TENSION STRANDS BE FOUND IN AREAS OF WORK CONTRACTOR SHALL LOCATE CORE DRILLS, HANGERS, SUPPORTS, SEISMIC RESTRAINTS, AND ANCHORAGES AS REQUIRED TO PROTECT EXISTING REINFORCING BARS AND POST TENSION STRANDS AND ADJUST FINAL PIPING LAY-OUT AS NECESSARY.

SHEET KEYNOTES:

1. INDEPENDENTLY-SUPPORTED 1" FIRE SPR. SUPPLY BELOW PLATFORM STRUCTURE. SEE PLUMBING DWG P403
2. 1" DN BEHIND ELEV. #3 SHAFT. SEE DWG F401, & PLUMBING DWG P403.
3. FIRE SPRINKLER PIPE SIZES ARE PER PIPE SCHEDULE FOR ORDINARY HAZARD GRP II PER NFPA 13.

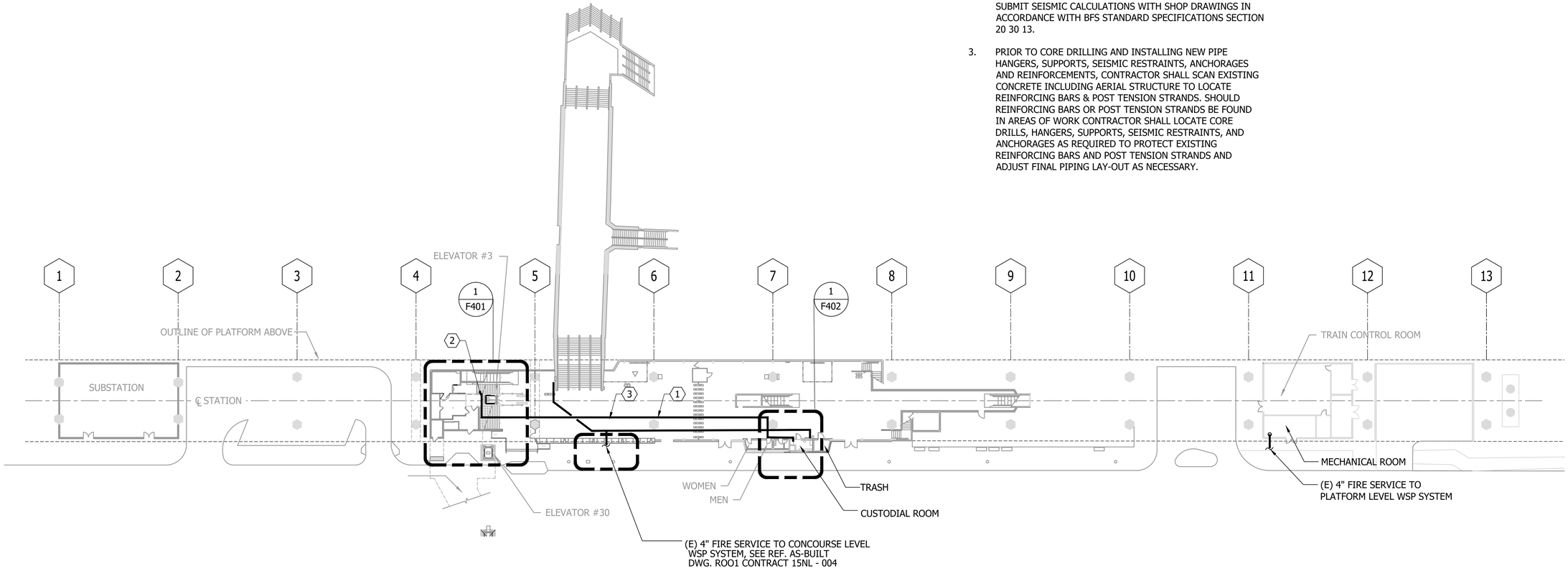

OVERALL FIRE PROTECTION PLAN
CONCOURSE LEVEL
SCALE: 1/32" = 1'-0"

1
F101

RN
N

0 16' 32' 64' 96'
GRAPHIC SCALE

REV.	DATE	BY	SUB	APP.	DESCRIPTION
P	20260518				ISSUED FOR BID

DESIGNED: R. WELLS
DRAWN: E. RODRIGUEZ
CHECKED: B. BRAUER
APPROVED: R. WELLS
DATE: 20190918

REGISTERED PROFESSIONAL ENGINEER
RICHARD H. WELLS
18395
EXP. 09-30-21
STATE OF CALIFORNIA
Richard H. Wells

SAN FRANCISCO BAY AREA RAPID TRANSIT DISTRICT

PGH WONG ENGINEERING, INC. — SUBMITTED
PGH WONG ENGINEERING, INC. — APPROVED

COLISEUM STATION ELEVATOR MODERNIZATION

OVERALL FIRE PROTECTION PLAN
CONCOURSE LEVEL

CADD FILENAME: 15NL-140-F101
SIZE: D
SCALE: 1/32" = 1'-0"
CONTRACT NO.: 15NL-140
REV.: P
CONTRACT SHEET NO.: F101
PAGE NO.: 030

Plot Date: 5/18/2026 - 10:45:51 AM
C:\Users\rwells\Desktop\Working Documents\15 Bart Projects\15NL-140 Coliseum Elevator\15NL-140-F101.dwg

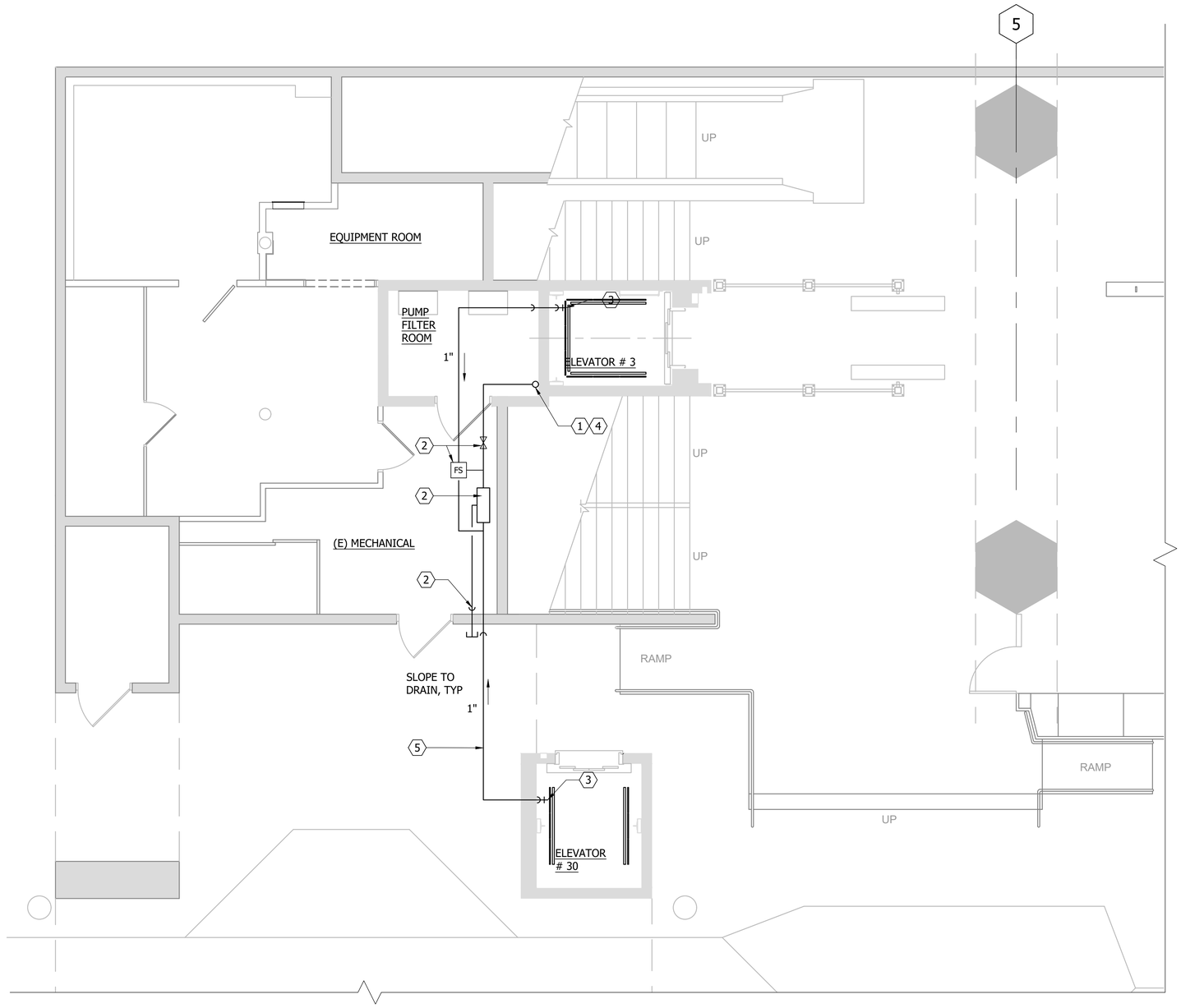

PARTIAL PLAN
ELEVATORS #3 AND #30
FIRE SPRINKLERS

SCALE: 1/4" = 1'-0"

1 / F401 — F101

GRAPHIC SCALE 0 1' 2' 4' 8'

RN
N

SHEET KEYNOTES:

1. 1" FIRE SPRINKLER SUPPLY UP. SEE DWG F101 & PLUMBING DWG P403.
2. 1" AREA ISOLATION VALVE, FLOW SWITCH FOR FIRE ALARM AREA INDICATION AND INSPECTORS TEST AND DRAIN ASSEMBLY. EXTEND 1" DRAIN TO OUTSIDE AND TURN DOWN 6" AB0VE GRADE WITH THREADED HOSE ADAPTER. DRAIN IS BELOW SUPPLY, SHOWN OFFSET FOR CLARITY.
3. SIDEWALL SPRINKLER IN PIT 24" MAX. ABOVE FLOOR, TYPICAL EACH ELEVATOR W/ TEE AND DRAIN PLUG. EXACT LOCATION TO BE COORDINATED WITH ELEVATOR DRAWINGS.
4. PIPE SIZES ARE PER PIPE SCHEDULE FOR ORDINARY HAZARD GRP II PER NFPA 13.
5. COORDINATE PIPE INSTALLATION WITH PLUMBING. SEE DWG P402, AND ARCHITECTURAL DRAWING A502 FOR COVER DETAIL.

GENERAL SHEET NOTES:

1. PIPE HANGERS, SUPPORTS, SEISMIC RESTRAINTS, ANCHORAGES AND REINFORCEMENTS SHALL BE PROVIDED IN ACCORDANCE WITH BFS STANDARD SPECIFICATIONS SECTIONS 20 20 13 AND 21 13 13. CONTRACTOR SHALL SUBMIT SEISMIC CALCULATIONS WITH SHOP DRAWINGS IN ACCORDANCE WITH BFS STANDARD SPECIFICATIONS SECTION 20 30 13.
2. PRIOR TO CORE DRILLING AND INSTALLING NEW PIPE HANGERS, SUPPORTS, SEISMIC RESTRAINTS, ANCHORAGES AND REINFORCEMENTS, CONTRACTOR SHALL SCAN EXISTING CONCRETE INCLUDING AERIAL STRUCTURE TO LOCATE REINFORCING BARS & POST TENSION STRANDS. SHOULD REINFORCING BARS OR POST TENSION STRANDS BE FOUND IN AREAS OF WORK CONTRACTOR SHALL LOCATE CORE DRILLS, HANGERS, SUPPORTS, SEISMIC RESTRAINTS, AND ANCHORAGES AS REQUIRED TO PROTECT EXISTING REINFORCING BARS AND POST TENSION STRANDS AND ADJUST FINAL PIPING LAY-OUT AS NECESSARY.

REV.	DATE	BY	SUB	APP.	DESCRIPTION
P	20260518				ISSUED FOR BID

DESIGNED: R. WELLS
DRAWN: E. RODRIGUEZ
CHECKED: B. BRAUER
APPROVED: R. WELLS
DATE: 20190918

REGISTERED PROFESSIONAL ENGINEER — RICHARD H. WELLS — 18395 — EXP. 09-30-27 — STATE OF CALIFORNIA

Richard H. Wells

SAN FRANCISCO BAY AREA RAPID TRANSIT DISTRICT

PGH WONG ENGINEERING, INC. — SUBMITTED

PGH WONG ENGINEERING, INC. — APPROVED

COLISEUM STATION ELEVATOR MODERNIZATION

PARTIAL PLAN
ELEVATORS #3 AND #30
CONCOURSE LEVEL - FIRE SPRINKLERS

CADD FILENAME: 15NL-140-F401
SIZE: D | SCALE: 1/4" = 1'-0"
CONTRACT NO.: 15NL-140 | REV.: P
CONTRACT SHEET NO.: F401 | PAGE NO.: 031

Plotted: Tue, 05 May 2026, 10:10am By: Richard Wells Drawing: P:\Projects\15NL-140 Elevator Modernization\2 PS Working Drawings\2.2 Work Phases (SD,PE,FE,CD,CA)\Base plans\15NL-140-F401.dwg

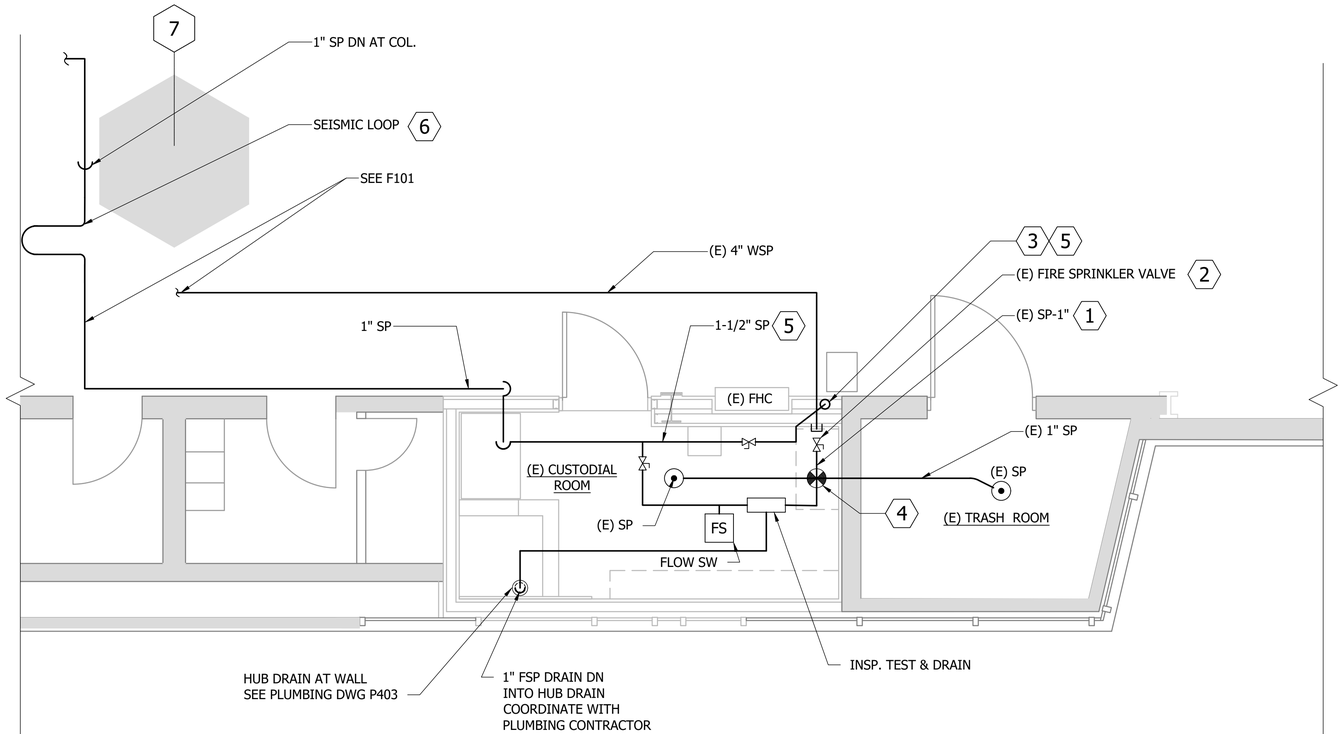

PARTIAL PLAN
CUSTODIAL ROOM/TRASH ROOM
FIRE SPRINKLERS

SCALE: 3/8" = 1'-0"

1 / F402 P403

0 1' 2' 4' 8'

GRAPHIC SCALE

RN

N

SHEET KEYNOTES:

1. DISCONNECT EXIST. 1" FIRE SPRINKLER SUPPLY LINE & CAP PIPE AT 4" WSP. REFER TO REF. AS-BUILT DWG R001, R002, CONTRACT 15NL-00Y.
2. REMOVE EXIST. 1" SPRINKLER ISOL. VALVE.
3. CONNECT NEW 1-1/2" FIRE SPR. SUPPLY TO EXIST. 4" WSP WITH CONTROL VALVE. EXTEND 1" DRAIN TO HUB DRAIN.
4. RECONNECT EXIST. 1" FIRE SPR. SUPPLY TO EXIST. SPRINKLERS IN CUSTODIAL AND TRASH ROOMS. PROVIDE NEW 1" ZONE ISOL. VALVE AND FLOW SWITCH FOR FIRE ALARM AREA INDICATION, & INSPECTOR'S TEST & DRAIN.
5. INDEPENDENTLY-SUPPORTED NEW FIRE SPRINKLER PIPING IN (E) CUSTODIAL ROOM BELOW EXISTING DUCT, ETC. CONTRACTOR TO CONFIRM EXACT HEIGHT & LOCATIONS IN FIELD FOR SHOP DRAWINGS.
6. SEISMIC LOOP SHALL BE METRAFLEX FIRELOOP MODEL MLUTFM160100, OR EQUAL, FOR +/-8" MOVEMENT IN ALL DIRECTIONS. INSTALL PER MANUFACTURER'S REQUIREMENTS W/SEISMIC BREAKAWAY HANGER TO SUPPORT LOOP. SEE 3/P403.

GENERAL SHEET NOTES:

1. EXISTING FIRE PROTECTION SERVICES ARE TO BE MAINTAINED OPERABLE AT ALL TIMES DURING CONSTRUCTION OR CONTRACTOR TO PROVIDE ALTERNATIVE FIRE PROTECTION SERVICES ACCEPTABLE TO BART AND LOCAL FIRE AUTHORITY
2. PIPE HANGERS, SUPPORTS, SEISMIC RESTRAINTS, ANCHORAGES AND REINFORCEMENTS SHALL BE PROVIDED IN ACCORDANCE WITH BFS STANDARD SPECIFICATIONS SECTIONS 20 20 13 AND 21 13 13. CONTRACTOR SHALL SUBMIT SEISMIC CALCULATIONS WITH SHOP DRAWINGS IN ACCORDANCE WITH BFS STANDARD SPECIFICATIONS SECTION 20 30 13.
3. PRIOR TO CORE DRILLING AND INSTALLING NEW PIPE HANGERS, SUPPORTS, SEISMIC RESTRAINTS, ANCHORAGES AND REINFORCEMENTS, CONTRACTOR SHALL SCAN EXISTING CONCRETE INCLUDING AERIAL STRUCTURE TO LOCATE REINFORCING BARS & POST TENSION STRANDS. SHOULD REINFORCING BARS OR POST TENSION STRANDS BE FOUND IN AREAS OF WORK CONTRACTOR SHALL LOCATE CORE DRILLS, HANGERS, SUPPORTS, SEISMIC RESTRAINTS, AND ANCHORAGES AS REQUIRED TO PROTECT EXISTING REINFORCING BARS AND POST TENSION STRANDS AND ADJUST FINAL PIPING LAY-OUT AS NECESSARY.

REV.	DATE	BY	SUB	APP.	DESCRIPTION
P	20260518				ISSUED FOR BID

DESIGNED: R. WELLS
DRAWN: E. RODRIGUEZ
CHECKED: B. BRAUER
APPROVED: R. WELLS
DATE: 20190918

REGISTERED PROFESSIONAL ENGINEER — RICHARD H. WELLS — 18395 — EXP. 09-30-27 — STATE OF CALIFORNIA
Richard H. Wells

SAN FRANCISCO BAY AREA RAPID TRANSIT DISTRICT

PGH WONG ENGINEERING, INC. — SUBMITTED

PGH WONG ENGINEERING, INC. — APPROVED

COLISEUM STATION ELEVATOR MODERNIZATION

PARTIAL PLAN
CUSTODIAL ROOM/TRASH ROOM
CONCOURSE LEVEL - FIRE SPRINKLERS

CADD FILENAME: 15NL-140-F402
SIZE: D
SCALE: AS SHOWN
CONTRACT NO.: 15NL-140
REV.: P
CONTRACT SHEET NO.: F402
PAGE NO.: 032

PLOT DATE: 5/18/2026 - 1:04 PM
FILE NAME: G:\Projects\15NL-140 Elevator Modernization\3 Working\1 Design\F402 Partial Plan - Custodial Room Fire Sprinklers.dwg

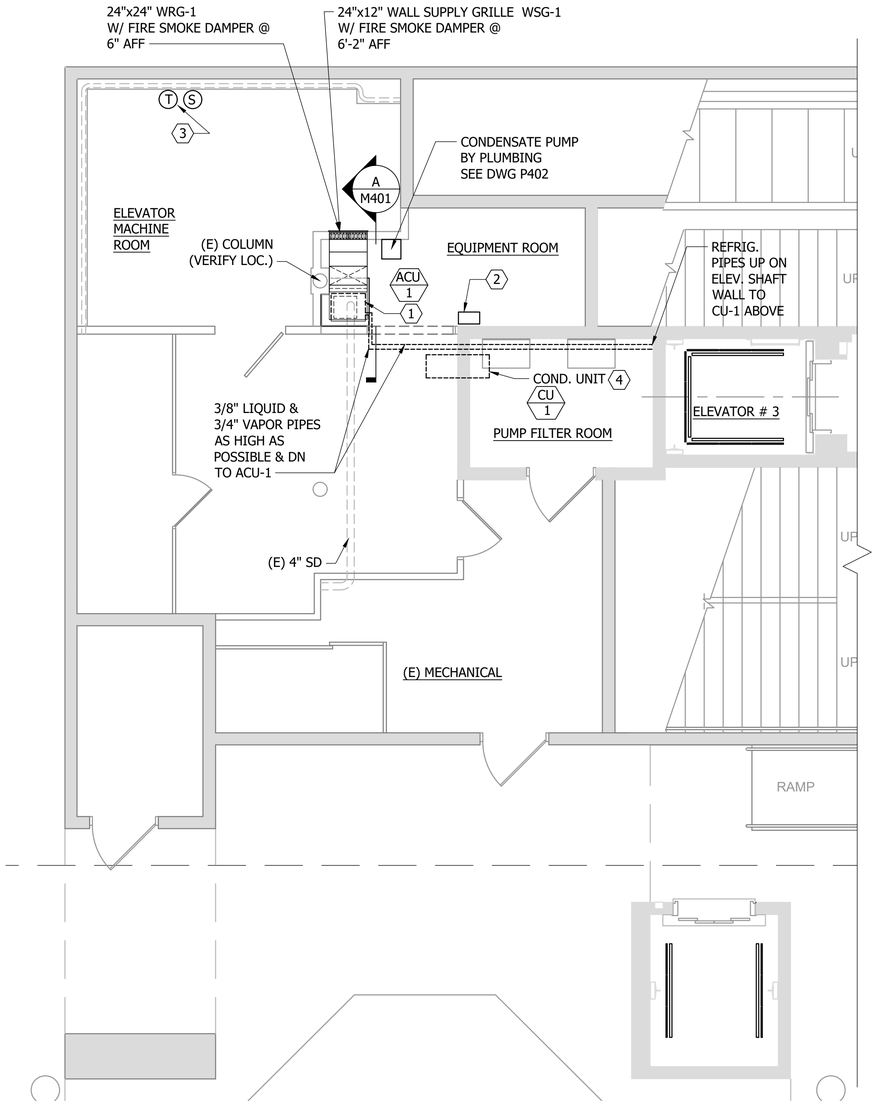

PARTIAL FLOOR PLAN - HVAC 1 / M401
SCALE: 1/4" = 1'-0"

0 1' 2' 4' 8'
GRAPHIC SCALE

RN
N

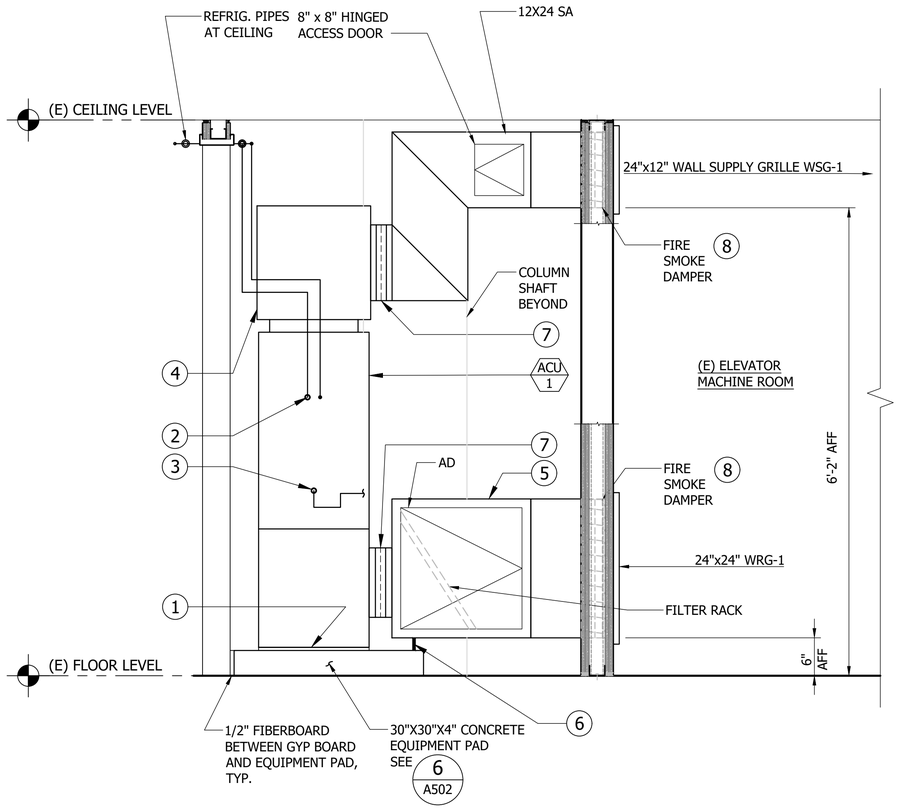

ELEVATION DETAIL - HVAC A / M401
SCALE: 1" = 1'-0"

0 1' 2' 4'
GRAPHIC SCALE

FLOOR PLAN KEYNOTES:

1. AIR HANDLING UNIT ACU-1, VERTICAL UP FLOW, W/ SIDE RA INLET, MOUNTED ON 30"X30"X4" CONCRETE EQUIPMENT PAD
2. ACU-1 DISCONNECT SWITCH ON WALL
3. THERMOSTAT & HIGH TEMP SENSOR ON WALL: 48" ABV FL. SEE COOLING SYSTEM SEQUENCE OF OPERATION.
4. CONDENSING UNIT (CU-1) ABOVE, SUSPENDED BELOW PLATFORM STRUCTURE. SEE DWG. M402.

ELEVATION DETAIL KEYNOTES:

1. MOUNT UNIT ON 1/2" NEOPRENE VIBRATION ISOL PAD AND ATTACH TO CONCRETE PAD PER MANUFACTURER'S INSTALLATION INSTRUCTIONS.
2. 3/4" VAPOR AND 3/8" LIQUID LINES CONNECT TO ACU-1 PER MANUFACTURER'S INSTALLATION INSTRUCTIONS.
3. 3/4" CONDENSATE DRAIN CONNECT TO UNIT PER MANUFACTURER'S INSTALLATION INSTRUCTIONS. EXTEND TO CONDENSATE PUMP SLOPE TO DRAIN @ 1/4" PER FT. SEE PLUMBING DWG. P402 FOR PUMP LOCATION.
4. SUPPLY AIR DISCHARGE PLENUM, 16"X24"X14"
5. RETURN AIR/FILTER PLENUM, 18"X24"X24", WITH 20"X20"X1" FILTER WITH HINGED SIDE ACCESS DOOR.
6. SUPPORT FOR RETURN AIR PLENUM ATTACHED TO CONCRETE PAD.
7. FLEX CONNECTION, TYP. SA & RA.
8. FIRE SMOKE DAMPER TO BE ACTUATED BY SMOKE DETECTOR IN ELEV. MACHINE ROOM. COORDINATE WITH ELECTRICAL DIV.

COOLING SYSTEM SEQUENCE OF OPERATION:

COOLING SYSTEM FOR ELEVATOR MACHINE ROOM (AHU-1/ CU-1) SHALL OPERATE 24/ 7 TO MAINTAIN ROOM TEMPERATURE. THERMOSTAT PROVIDED WITH AHU-1 TO BE SET FOR 85° F WIRED FOR INTERMITTENT FAN OPERATION. HIGH TEMP SENSOR TO BE TRANE BAY SENS 075A DIGITAL ZONE SENSOR OR EQUAL, SET FOR 90° F AND WIRED TO SCADA TO INDICATE HIGH ROOM TEMPERATURE ALARM.

GENERAL SHEET NOTES:

1. PIPE HANGERS, SUPPORTS, SIEMIC RESTRAINTS, ANCHORAGES, AND REINFORCEMENTS SHALL BE PROVIDED IN ACCORDANCE WITH BFS STANDARD SPECIFICATIONS SECTION 20 20 13. CONTRACTOR SHALL SUBMIT SEISMIC CALCULATIONS WITH SHOP DRAWINGS IN ACCORDANCE WITH BFS STANDARD SPECIFICATION SECTION 20 30 13.
2. PRIOR TO CORE DRILLING AND INSTALLING NEW PIPE HANGERS, SUPPORTS, SEISMIC RESTRAINTS, ANCHORAGES AND REINFORCEMENTS, CONTRACTOR SHALL SCAN EXISTING CONCRETE INCLUDING AERIAL STRUCTURE TO LOCATE REINFORCING BARS & POST TENSION STRANDS. SHOULD REINFORCING BARS OR POST TENSION STRANDS BE FOUND IN AREAS OF WORK CONTRACTOR SHALL LOCATE CORE DRILLS, HANGERS, SUPPORTS, SEISMIC RESTRAINTS, AND ANCHORAGES AS REQUIRED TO PROTECT EXISTING REINFORCING BARS AND POST TENSION STRANDS AND ADJUST FINAL PIPING LAY-OUT AS NECESSARY.

REV.	DATE	BY	SUB	APP.	DESCRIPTION
P	20260518				ISSUED FOR BID

DESIGNED: R. WELLS
DRAWN: E. RODRIGUEZ
CHECKED: B. BRAUER
APPROVED: R. WELLS
DATE: 20190918

REGISTERED PROFESSIONAL ENGINEER — RICHARD H. WELLS — 18395 — EXP. 09-30-21 — STATE OF CALIFORNIA
Richard H. Wells

SAN FRANCISCO BAY AREA RAPID TRANSIT DISTRICT

PGH WONG ENGINEERING, INC. — SUBMITTED
PGH WONG ENGINEERING, INC. — APPROVED

COLISEUM STATION ELEVATOR MODERNIZATION

PARTIAL FLOOR PLAN
ELEVATION DETAIL
CONCOURSE LEVEL - HVAC

CADD FILENAME: 15NL-140-M401
SIZE: D
SCALE: AS SHOWN
CONTRACT NO.: 15NL-140
REV.: P
CONTRACT SHEET NO.: M401
PAGE NO.: 033

Plot Date: 20260518 - 10:08AM | G:\BDOCS\14043 Elevator Modernization\04 Working Drawings\01 Architectural\Drawings\15NL-140-M401.dwg

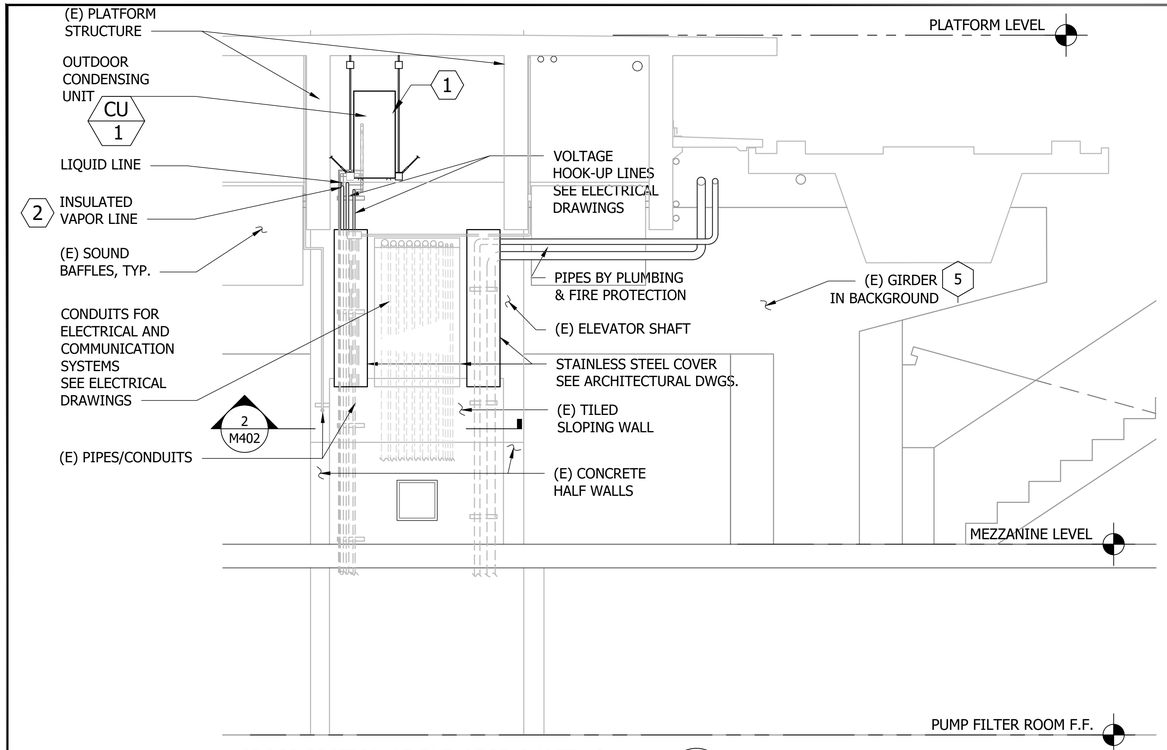

CROSS SECTION AT ELEVATOR SHAFT #3

SCALE: 3/8" = 1'-0"

1 M402

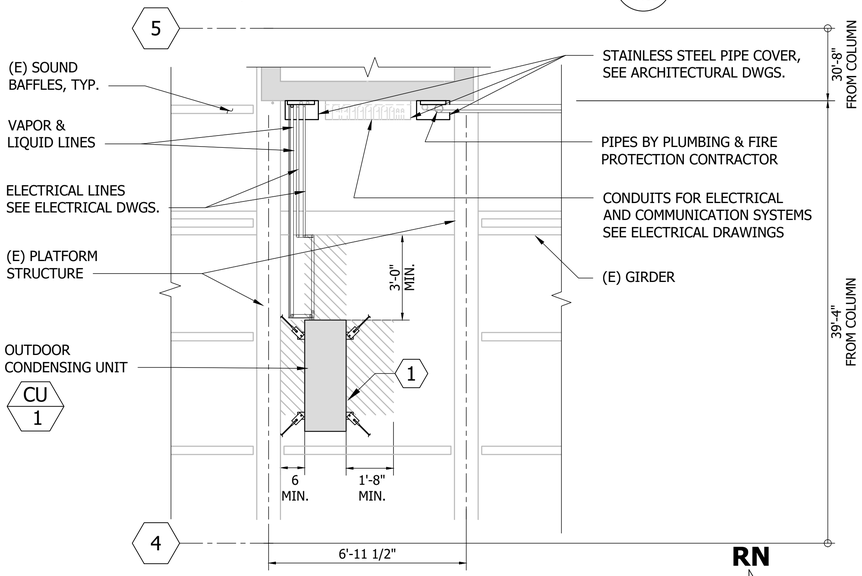

PARTIAL REFLECTED CEILING PLAN

SCALE: 3/8" = 1'-0"

2 M402

RN

N

0 1' 5' 10'

GRAPHIC SCALE

SHEET KEYNOTES:

1. SUSPEND CONDENSING UNIT ON TWO CHANNEL STRUT PER MANUFACTURER'S INSTALLATION INSTRUCTIONS & PROVIDE SEISMIC SWAY BRACING PER BFS DETAIL 3/MS57
2. INSULATE VAPOR LINE PER MANUFACTURER'S INSTALLATION INSTRUCTIONS.

GENERAL SHEET NOTES:

1. PIPE HANGERS, SUPPORTS, SEISMIC RESTRAINTS, ANCHORAGES AND REINFORCEMENTS AND EQUIPMENT ANCHORAGES SHALL BE PROVIDED IN ACCORDANCE WITH BFS STANDARD SPECIFICATIONS SECTION 20 20 13. CONTRACTOR SHALL SUBMIT SEISMIC CALCULATIONS WITH SHOP DRAWINGS IN ACCORDANCE WITH BFS STANDARD SPECIFICATION SECTION 20 30 13.
2. PRIOR TO CORE DRILLING AND INSTALLING NEW PIPE HANGERS, SUPPORTS, SEISMIC RESTRAINTS, ANCHORAGES AND REINFORCEMENTS, CONTRACTOR SHALL SCAN EXISTING CONCRETE INCLUDING AERIAL STRUCTURE TO LOCATE REINFORCING BARS & POST TENSION STRANDS. SHOULD REINFORCING BARS OR POST TENSION STRANDS BE FOUND IN AREAS OF WORK CONTRACTOR SHALL LOCATE CORE DRILLS, HANGERS, SUPPORTS, SEISMIC RESTRAINTS, AND ANCHORAGES AS REQUIRED TO PROTECT EXISTING REINFORCING BARS AND POST TENSION STRANDS AND ADJUST FINAL PIPING LAY-OUT AS NECESSARY.

REV.	DATE	BY	SUB	APP.	DESCRIPTION
P	20260518				ISSUED FOR BID

DESIGNED: R. WELLS
DRAWN: E. RODRIGUEZ
CHECKED: B. BRAUER
APPROVED: R. WELLS
DATE: 20190918

REGISTERED PROFESSIONAL ENGINEER RICHARD H. WELLS 18395 EXP. 09-30-27 STATE OF CALIFORNIA

Richard H. Wells

SAN FRANCISCO BAY AREA RAPID TRANSIT DISTRICT

PGH WONG ENGINEERING, INC. — SUBMITTED

PGH WONG ENGINEERING, INC. — APPROVED

COLISEUM STATION ELEVATOR MODERNIZATION

CROSS SECTION
PARTIAL REFLECTED CEILING PLAN
MEZZANINE LEVEL - HVAC

CADD FILENAME: 15NL-140-M402
SIZE: D
SCALE: 3/8" = 1'-0"
CONTRACT NO.: 15NL-140
REV.: P
CONTRACT SHEET NO.: M402
PAGE NO.: 034

Plot No. 20260518 - 08:08:13 AM | D:\Users\...\15NL-140-Coliseum Modernization\10 Working (Design)\17 Sheets Pending (BFS)\15 CADD\Sheet Files\15NL-140-M402.dwg

CONDENSING UNIT (OUTDOOR UNIT) SCHEDULE

EQUIPMENT NUMBER	BUILDING SERVED	TYPE	CAPACITY MBH		FAN MOTOR		AMB TEMP F° (SEE NOTE 1.)		COMPRESSOR			REFR, TYPE	ELECTRICAL VOLT-PH-HZ	TOTAL EST,WT,LBS,	BASIS OF DESIGN PRODUCT
									QTY	EACH					
			TOTAL	SENS	QTY	HP EACH	DB	WB		MIN. CKT AMP	BRANCH CKT MAX				
CU 1	ELEV. MACHINE RM.	AIR - COOLED	28,2OO	-	1	1/8	93	-	1	15	25	R-454B	208 /230 -1-60	204	TRANE 4 TTL 5030N1000A, OR EQUAL

NOTE:

1. PROVIDE EVAPORATOR DEFROST CONTROL WITH TXV FOR LOW AMBIENT COOLING TO 30° F.

SPLIT SYSTEM PACKAGED AIR HANDLING UNIT (INDOOR UNIT) SCHEDULE

EQUIPMENT NUMBER	BUILDING SERVED	SUPPLY FAN			DX COOLING COIL						AIR FILTER			MIN QA CFM	TOTAL EST,WT, LBS,	BASIS OF DESIGN PRODUCT
					TOTAL MBH	SENSIBLE MBH	EAT F		LAT F							
		AIR FLOW CFM	EXT. S.P. INCH W.C.	FAN MOTOR HP			DB	WB	DB	WB	QTY	MERV MIN EFF.	SIZE			
ACU 1	ELEV. EQUIP RM.	8OO	0.5	1/2	28,2OO	24,1OO	85	-	55	-	1	8	20X20X1	-	150	TRANE TAM9A0B30, OR EQUAL

NOTES:

1. PROVIDE SIDE RETURN KIT.
2. PROVIDE NON-PROGRAMMABLE, 1-STAGE COOLING THERMOSTAT.

AIR OUTLET SCHEDULE

MARK	SERVICE	CFM RANGE	NECK SIZE	MODEL NO. (TITUS OR EQUAL)	MATERIAL/FINISH
WSG 1	SUPPLY	600-800	24X12	MODEL 301 RL	STEEL/ WHITE PRIMED
WRG 1	RETURN	600-800	24X24	MODEL 350 RL	STEEL/ WHITE PRIMED

REV.	DATE	BY	SUB	APP.	DESCRIPTION
P	20260518				ISSUED FOR BID

DESIGNED: R. WELLS
DRAWN: G.HEMMAT
CHECKED: B. BRAUER
APPROVED: R. WELLS
DATE: 20190918

REGISTERED PROFESSIONAL ENGINEER RICHARD H. WELLS 18395 ISSUED 09-30-27 STATE OF CALIFORNIA

Richard H. Wells

SAN FRANCISCO BAY AREA RAPID TRANSIT DISTRICT

PGH WONG ENGINEERING, INC. — SUBMITTED

PGH WONG ENGINEERING, INC. — APPROVED

COLISEUM STATION ELEVATOR MODERNIZATION

EQUIPMENT SCHEDULES

CADD FILENAME: 15NL-140-M601
SIZE: D | SCALE: NONE
CONTRACT NO.: **15NL-140** | REV.: **P**
CONTRACT SHEET NO.: **M601** | PAGE NO.: **035**

Christopher Gamez Sep 17, 2026 - J:\Dgn\15NL\M\Elevator Modernization\2.0 Working (Design)\7.0 Mech Plumb PKG\7.5 L CAD\Sheet sheet\15NL-140_M601.dwg

ABBREVIATIONS

A	COMPRESSED AIR
AA	ACOUSTICAL ATTENUATOR
AAV	AUTOMATIC AIR VENT
AC	AIR COMPRESSOR
ACD	ACCESS DOOR
ACU	AIR CONDITIONING UNIT
AD	AREA DRAIN
AF	AIR FILTER
AFF	ABOVE FINISH FLOOR
AGA	AMERICAN GAS ASSOCIATION
AHU	AIR HANDLING UNIT
AI	ANALOG INPUT
AMB	AMBIENT
ANSI	AMERICAN NATIONAL STANDARDS INSTITUTE
AO	ANALOG OUTPUT
AP	ACCESS PANEL
APD	AIR PRESSURE DROP
APPROX	APPROXIMATE
ARCH	ARCHITECTURAL
ASD	AUTOMATIC SPRINKLER DRAIN
ASR	AUTOMATIC SPRINKLER RISER
ASTM	AMERICAN SOCIETY FOR TESTING AND MATERIALS
AVG	AVERAGE
BD	BALANCING DAMPER
BDD	BACK DRAFT DAMPER
BFP	BACK FLOW PREVENTER
BHP	BRAKE HORSE POWER
BLDG	BUILDING
BOD	BOTTOM OF DUCT
BTUH	BRITISH THERMAL UNIT PER HOUR
BV	BUTTERFLY VALVE
CAP	CAPACITY
CB	CATCH BASIN
CC	COOLING COIL
CD	CONDENSATE DRAIN
CEG	CEILING EXHAUST GRILLE
CFH	CUBIC FEET PER HOUR
CFM	CUBIC FEET PER MINUTE
CG	CEILING GRILLE
CHWR	CHILLED WATER RETURN
CHWS	CHILLED WATER SUPPLY
CI	CAST IRON
CLG	CEILING
CO	CLEAN OUT
COND	CONDENSATE, CONDENSING, CONDITIONED
CONN	CONNECTION
CONT	CONTINUATION
CPC	CALIFORNIA PLUMBING CODE
CRD	CEILING RETURN DIFFUSER
CRG	CEILING RETURN GRILLE
CRR	CEILING RETURN REGISTER
CSD	CEILING SUPPLY DIFFUSER
CSR	CEILING SUPPLY REGISTER
CU	CONDENSING UNIT
CV	CHECK VALVE
CW	COLD WATER
CWR	COOLING TOWER RETURN
CWS	COOLING TOWER SUPPLY
D	DRAIN, DRAINAGE
DB	DRY BULB
DEG	DUCT EXHAUST GRILLE
DF	DRINKING FOUNTAIN
DG	DOOR GRILLE
DI	DIGITAL INPUT
DIA	DIAMETER
DIM	DIMENSION
DL	DOOR LOUVER
DMP	DESIGNATED MATCHING PRODUCT
DN	DOWN
DO	DIGITAL OUTPUT
DP	DIFFERENTIAL PRESSURE
DWG	DRAWING
DX	DIRECT EXPANSION
<E>	EXISTING
EA	EXHAUST AIR
EAD	EXHAUST AIR DAMPER
EAT	ENTERING AIR TEMPERATURE
EBH	ELECTRIC BASEBOARD HEATER
ECC	ELECTRIC CABINET CONVECTOR
ECH	ELECTRIC CABINET HEATER
EDF	ELECTRIC DRINKING FOUNTAIN
EF	EXHAUST FAN
EFF	EFFICIENCY
EHC	ELECTRIC HEATING COIL
ELEC	ELECTRICAL
ELEV	ELEVATION
EQ	EQUAL
EQUIP	EQUIPMENT
ER	EXHAUST REGISTER
ES/EW	EMERGENCY SHOWER/EYE WASH
ESP	EXTERNAL STATIC PRESSURE
EST	ESTIMATE
EUH	ELECTRIC UNIT HEATER
EWT	ENTERING WATER TEMPERATURE
EXTR	EXTRACTOR
F	DEGREES FAHRENHEIT, FILTER
FC	FORWARD CURVE, FAN COIL
FCD	FLOW CONTROL DEVICE
FCO	FLOOR CLEAN OUT
FD	FLOOR DRAIN
FDC	FIRE DEPARTMENT CONNECTION
FDP	FIRE DAMPER WITH ACCESS PANEL
FCU	FAN COIL UNIT
FH	FIRE HYDRANT
FHC	FIRE HOSE CABINET
FLA	FULL LOAD AMPERES
FLEX	FLEXIBLE
FLR	FLOOR
FM	FACTORY MUTUAL
FMN	FORCE MAIN
FPM	FEET PER MINUTE
FPS	FEET PER SECOND
FRG	FLOOR RETURN GRILLE
FRIG	REFRIGERATOR
FS	FLOOR SINK, FLOW SWITCH
FSC	FAN SPEED CONTROLLER
FSD	COMBINATION FIRE SMOKE DETECTOR
FT	FEET, FOOT
FV	FLOW VENTURI, FACE VELOCITY
FCP	FAN CONTROL PANEL
G	NATURAL GAS
GA	GAUGE
GAL	GALLON(S)
GALV	GALVANIZED
GCO	GRADE CLEAN OUT
GE	GROOVED END
GLV	GLOVE VALVE
GPM	GALLONS PER MINUTE
GR	GRILLE
GTH	GRAND TOTAL HEAT
GUH	GAS UNIT HEATER
GV	GATE VALVE, GRAVITY VENT
H	HUMIDISTAT
HB	HOSE BIBB
HC	HEATING COIL
HCR	HUMIDITY CONTROLLER
HD	HEAD
HDN	HOPPER DRAIN
HHWR	HOT WATER RETURN (HEATING)
HHWS	HOT WATER SUPPLY (HEATING)
HWR	HOT WATER RETURN (DOMESTIC)
HI	HIGH
HORIZ	HORIZONTAL
HP	HORSE POWER, HEAT PUMP
HR	HOUR
HSC	HEAT STORAGE CABINET
HT	HEIGHT
HTG	HEATING
HV	HEATING AND VENTILATING UNIT
HVA	HOSE VALVE, ANGLE GLOBE TYPE
HVAC	HEATING, VENTILATING AND AIR CONDITIONING
HVS	HOSE VALVE, STRAIGHTWAY GATE TYPE
HWR	HOT WATER RETURN (DOMESTIC)
HWS	HOT WATER SUPPLY (DOMESTIC)
HZ	HERTZ
ID	INSIDE DIAMETER
IE	INVERT ELEVATION
IN	INCH(ES)
INSUL	INSULATION
INWC	INCHES OF WATER COLUMN
IPS	IRON PIPE SIZE
IRR	IRRIGATION
IW	INDUSTRIAL WASTE
KS	KITCHEN SINK
KW	KILOWATT
JS	JANITORIAL SINK
L	LOUVER, LIQUID, LENGTH
LAT	LEAVING AIR TEMPERATURE
LAV	LAVATORY
LBS	POUNDS
LCP	LOCAL CONTROL PANEL
LR	LONG RADIUS
LRA	LOCKED ROTOR AMPS
LWT	LEAVING WATER TEMPERATURE
MAV	MANUAL AIR VENT
MAX	MAXIMUM
MBH	THOUSAND BTUH
MCA	MINIMUM CIRCUIT AMPS
MCC	MOTOR CONTROL CENTER
MCP	MOTOR CONTROL PANEL
MD	MOTOR OPERATED DAMPER
MFR	MANUFACTURER
MH	MAN HOLE
MIN	MINIMUM
MISC	MISCELLANEOUS
MOD	MOTOR OPERATED DAMPER
MPH	MILES PER HOUR
MS	MOP SINK, MOTOR STARTER
<N>	NEW
N/A	NOT APPLICABLE
NC	NORMALLY CLOSED, NOISE CRITERIA
NFPA	NATIONAL FIRE PROTECTION ASSOCIATION
NIC	NOT IN CONTRACT
NK	NECK
NO	NORMALLY OPEN, NUMBER
NOM	NOMINAL
NTS	NOT TO SCALE
OA	OUTSIDE AIR
OAD	OUTSIDE AIR DAMPER
OCC	OPERATIONS CONTROL CENTER
OD	OUTSIDE DIAMETER
OFD	OVERFLOW DRAIN
OPER	OPERATING
OV	OUTSIDE VELOCITY
PC	PRECAST CONCRETE
PD	PUMP DISCHARGE, PIT DRAIN
PDN	PLANTER DRAIN
PE	PNEUMATIC–ELECTRIC
PH	PHASE
PIV	POST INDICATOR VALVE
PLBG	PLUMBING
PNEU	PNEUMATIC
POC	POINT OF CONNECTION
PRESS	PRESSURE
PRV	PRESSURE REDUCING VALVE
PRVAL	PRESSURE RELIEVE VALVE
PS	POSITION SWITCH
PSI	POUNDS PER SQUARE INCH
PSIG	POUNDS PER SQUARE INCH GAUGE
PTC	PROJECT TEST CENTER
PVC	POLYVINYL CHLORIDE
QTY	QUANTITY
R	RADIUS
RA	RETURN AIR
RAD	RETURN AIR DAMPER
RD	ROOF DRAIN
RECT	RECTANGULAR
REF	REFERENCE
REQ'D	REQUIRED
REV	REVISION
RF	RETURN FAN
RH	RADIANT HEATER, RELATIVE HUMIDITY, RELIEF HOOD
RL	REFRIGERANT LIQUID, RAIN LEADER
RLA	RATED LOAD AMPS
RM	ROOM
RPM	REVOLUTIONS PER MINUTE
RS	REFRIGERANT SUCTION
RV	ROOF VENTILATOR
RWL	RAINWATER LEADER
S	SANITARY
SA	SUPPLY AIR
SAR	SOUND ATTENUATOR
SCAC	SELF CONTAINED AIR CONDITIONER
SCADA	SUPERVISORY CONTROL AND DATA ACQUISITION
SCD	SMOKE CONTROL DAMPER
SCH	SCHEDULE
SCHP	SELF CONTAINED HEAT PUMP
SCS	SMOKE CONTROL SENSOR
SD	STORM DRAIN, SMOKE DETECTOR
SDP	SPLITTER DAMPER, SMOKE/FIRE DAMPER WITH ACCESS PANEL
SF	SUPPLY FAN, SQUARE FEET
SHC	SENSIBLE HEATING CAPACITY
SHR	SHOWER
SIM	SIMILAR
SOL	SOLENOID
SP	SUMP PUMP, SPRINKLER, STATIC PRESSURE
SPEC	SPECIFICATION
SPWG	STATIC PRESSURE WATER GAUGE
SQ	SQUARE
SQ. FT.	SQUARE FOOT (FEET)
SS	SANITARY SEWER
STD	STANDARD
SVF	SUBWAY VENTILATION FAN
T	THERMOSTAT
T&P	TEMPERATURE AND PRESSURE RELIEF VALVE
TC	TEMPERATURE CONTROLLER, TIME CLOCK
TCC	TOTAL COOLING CAPACITY
TD	TRENCH DRAIN
TE	THREADED END
TEMP	TEMPERATURE
TG	TRANSFER GRILLE
THK	THICK
THR	TOTAL HEAT REJECTION
THRU	THROUGH
TP	TRAP PRIMER
TSP	TOTAL STATIC PRESSURE
TSTAT	THERMOSTAT
TV	TURNING VANE
TYP	TYPICAL
UB	UTILITY BOX
UBC	UNIFORM BUILDING CODE
UC	UNDER CUT
UG	UNDERGROUND
UH	UNIT HEATER
UL	UNDERWRITER'S LABORATORY
UMC	UNIFORM MECHANICAL CODE
UPC	UNIFORM PLUMBING CODE
UR	URINAL
V	VENT, VOLT
VAC	VACUUM
VAV	VARIABLE AIR DAMPER
VB	VACUUM BREAKER
VCP	VENTILATION CONTROL PANEL
VD	VOLUME DAMPER
VEL	VELOCITY
VERT	VERTICAL
VFD	VARIABLE FREQUENCY DRIVE
VOL	VOLUME
VTR	VENT THROUGH ROOF
W	WASTE, OVERALL WIDTH
W/	WITH
W/O	WITHOUT
WB	WET BULB
WC	WATER CLOSET
W.C.	WATER COLUMN
WCO	WALL CLEAN OUT
WEG	WALL EXHAUST GRILLE
WG	WATER GAUGE
WH	WATER HEATER
WHA	WATER HAMMER ARRESTOR
WHY	WALL HYDRANT
WL	WALL LOUVER
WMS	WIRE MESH SCREEN
WRG	WALL RETURN GRILLE
WRR	WALL RETURN REGISTER
WSP	WET STANDPIPE
WSR	WALL SUPPLY REGISTER
WT	WEIGHT
WTG	WALL TRANSFER GRILLE
Z	ZONE

REV.	DATE	BY	CKD	APP.	DESCRIPTION
04	11/09/2015	MJD	RA	MB	REVISED PER BECO BFS00268
03	12/2014	LC	RA	MB	REVISED PER BECO BFS00171

THIS DRAWING IS INTENDED SOLELY FOR BART USE IN ORDER TO DESIGN, CONSTRUCT, ALTER, OR MAINTAIN ITS FACILITIES. BART DOES NOT RECOMMEND OR WARRANT USE OF THE DRAWING FOR ANY OTHER PURPOSE. USE OF THE DRAWING BEYOND THE INTENDED PURPOSE WILL BE AT USER'S OWN RISK.

DESIGNED: BATC
DRAWN: L. CHU
CHECKED: B. YEE
APPROVED: M. BLAKE
DATE: 9/08

ORIGINAL DRAWING BEARS THE REGISTERED PROFESSIONAL ENGINEER SEAL NO.: M26659 AND SIGNATURE OF: FARAMARZ FARASSAT

SAN FRANCISCO BAY AREA RAPID TRANSIT DISTRICT

BART

MANAGER: _____

BART

APPROVED BY: _____

BART FACILITIES STANDARDS MECHANICAL

ABBREVIATIONS

CADD FILENAME

SIZE: D | SCALE: NONE

CONTRACT NO.: 15NL-140 | REV.: 04

CONTRACT SHEET NO.: MS01 | PAGE NO.: 036

11/9/2015 2:50:56 PM, M. DELOSO

HVAC

SYMBOL	DESCRIPTION
12 x 6	DUCT SIZE – FIRST FIGURE IS SIDE SHOWN
DUCT SECTION / DUCT SECTION AT WALL OR CEILING PENETRATION	
SA / SA	SUPPLY AIR DUCT SECTION
RA / RA	RETURN AIR DUCT SECTION
EA / EA	EXHAUST AIR DUCT SECTION
OA / OA	OUTSIDE AIR DUCT SECTION
RD	ROUND DUCT SECTION
VD	MANUAL VOLUME DAMPER
FDP–XX	FIRE DAMPER WITH ACCESS PANEL (HOUR RATING AS NOTED)
SDP	SPLITTER DAMPER
EXTR	ADJUSTABLE EXTRACTOR
FLEX	FLEXIBLE DUCT AND EQUIPMENT CONNECTION
	ELBOW WITH TURNING VANES
	TEE WITH TURNING VANES
FCD	FLOW CONTROL DEVICE
FV	FLOW VENTURI
	PIPE OR DUCT SHALL BE DEMOLISHED
CSD– SIZE VOL.	CSD–XX = CEILING SUPPLY DIFFUSER NO. SIZE = NECK SIZE CFM = FLOW IN CFM → = DIRECTION OF AIR FLOW, AS SHOWN ON PLAN DRAWINGS
SIZE–CRD–XX / CFM	CEILING RETURN DIFFUSER–TYPE
SIZE–CRG–XX / CFM	CEILING RETURN GRILLE (DUCTED)
SIZE–CEG–XX / CFM	CEILING EXHAUST GRILLE
SIZE–CSR–XX / CFM	CEILING SUPPLY REGISTER, SIDEWALL
SIZE–CRG–XX / CFM	CEILING RETURN GRILLE, SIDEWALL
SIZE–WSR–XX / CFM	WALL SUPPLY REGISTER
SIZE–WRG–XX / CFM	WALL RETURN GRILLE
SIZE–WTG–XX / CFM	WALL TRANSFER GRILLE (TWO–GRILLES)
SIZE–FRG–XX / CFM	FLOOR RETURN GRILLE (NON–DUCTED)
	LOUVER
	LOUVER

HVAC

SYMBOL	DESCRIPTION
DL	DOOR LOUVER
UC	UNDERCUT DOOR
SAR	SOUND ATTENUATOR
	FLEXIBLE DUCT
	RECTANGULAR TO ROUND TRANSITION
	ACOUSTICAL LINED DUCT
R	DUCT RISE IN DIRECTION OF AIR FLOW
D	DUCT DROP IN DIRECTION OF AIR FLOW
BDD	BACK DRAFT DAMPER
EHC	ELECTRIC DUCT HEATER
SD	SMOKE/FIRE DAMPER WITH ACCESS DOOR
M	MOTORIZED DAMPER
T	THERMOSTAT
M	MOTOR
HCR	HUMIDITY CONTROLLER
H	HUMIDISTAT
	SIGNAL TRANSMITTED TO LOCAL CONTROL PANEL
	SIGNAL RECEIVED FROM LOCAL CONTROL PANEL
S	START/STOP (OPEN/CLOSE) INTERFACE
R	CONTROLLER RESET INTERFACE
E	ECONOMIZER CONTROL INTERFACE
TI	TEMPERATURE INDICATOR
0	ON/OFF STATUS SIGNAL (OPEN/CLOSE CONTACTS)
DPT	DIFFERENTIAL PRESSURE TRANSMITTER
DPS	DIFFERENTIAL PRESSURE SWITCH
DPI	DIFFERENTIAL PRESSURE INDICATOR
STR	MOTOR STARTER
	SENSOR INSTALLED IN DUCT OR PIPE
TC	TEMPERATURE CONTROLLER
TT	TEMPERATURE TRANSMITTER
	LOCAL CONTROL INTERLOCK SIGNAL LINE
	FAN, CENTRIFUGAL
	VANE–AXIAL FAN
	FAN, PROPELLER

HVAC

SYMBOL	DESCRIPTION
XX / X	EQUIPMENT IDENTIFICATION TAG
C / DX	COOLING COIL, DIRECT EXPANSION
C / C	COOLING COIL (CHILLED WATER)
H / E	HEATING COIL, ELECTRIC
H / H	HEATING COIL (HOT WATER)
RH	REHEAT COIL
PH	PREHEAT COIL
	FILTER, DISPOSABLE
I	INTERLOCK

HVAC , PLUMBING AND FIRE PROTECTION

SYMBOL	DESCRIPTION
CW	COLD WATER (DOMESTIC)
HWS	HOT WATER SUPPLY (DOMESTIC)
HWR	HOT WATER RETURN (DOMESTIC)
HHWS	HOT WATER SUPPLY (HEATING)
HHWR	HOT WATER RETURN (HEATING)
CHWS	CHILLED WATER SUPPLY
CHWR	CHILLED WATER RETURN
CWS	COOLING TOWER WATER SUPPLY
CWR	COOLING TOWER WATER RETURN
G	NATURAL GAS
A	COMPRESSED AIR LINE
F	FIRE LINE
FOD	FUEL OIL DISCHARGE
FOR	FUEL OIL RETURN
FOS	FUEL OIL SUCTION
IW	INDUSTRIAL WASTE LINE
RD	REFRIGERANT DISCHARGE
RL	REFRIGERANT LIQUID
RS	REFRIGERANT SUCTION
SP	SPRINKLER
WSP	WET STANDPIPE
IR	IRRIGATION WATER
SS	SANITARY SEWER ABOVE GRADE
SS	SANITARY SEWER BELOW GRADE
W	WASTE DRAIN ABOVE GRADE
W	WASTE DRAIN BELOW GRADE
SD	STORM DRAIN ABOVE GRADE
SD	STORM DRAIN BELOW GRADE
V	VENT
CD	CONDENSATE DRAIN
VA	VACUUM AIR

HVAC, PLUMBING AND FIRE PROTECTION

SYMBOL	DESCRIPTION
	DIRECTION OF SLOPE, RISE (R), DROP (D)
	UNION
	BLIND FLANGE
CO	CEILING CLEAN OUT
	CAP ON END OF PIPE
	Y–TYPE STRAINER
	PIPE ANCHOR
	PIPE GUIDE
	GLOBE VALVE
	GATE VALVE
	BUTTERFLY VALVE
	CHECK VALVE (FLOW ARROW SHOWN)
	PRESSURE REGULATOR VALVE
M	MOTORIZED CONTROL VALVE, 2–WAY
M	MOTORIZED CONTROL VALVE, 3–WAY
	HOSE VALVE, ANGLE GLOBE TYPE (HVA)
	HOSE VALVE, STRAIGHTWAY GATE TYPE (HVS)
	PRESSURE RELIEF VALVE
	PRESSURE GAUGE W/GAUGE COCK
	THERMOMETER
	HOSE BIBB
	TRAP PRIMER VALVE
	AUTOMATIC AIR RELEASE AND VACUUM BREAKER
	BACKFLOW PREVENTER (FLOW ARROW SHOWN)
	STRAINER WITH BLOW DOWN VALVE AND HOSE CONNECTION
S	SOLENOID VALVE
	BALANCING VALVE OR PLUG VALVE
	BALL VALVE
	NEEDLE VALVE
	PLUG VALVE
	PRESSURE REDUCING VALVE
	ELBOW UP
	ELBOW DOWN
	FLANGE CONNECTION
	GAS OR GAUGE COCK
FS	FLOW SWITCH
AAV	AUTOMATIC AIR VENT
MV	MANUAL AIR VENT

REV.	DATE	BY	CHK'D.	APP.	DESCRIPTION
01	09/08			MCB	REVISED PER BECO EM001537

THIS DRAWING IS INTENDED SOLELY FOR BART USE IN ORDER TO DESIGN, CONSTRUCT, ALTER, OR MAINTAIN ITS FACILITIES. BART DOES NOT RECOMMEND OR WARRANT USE OF THE DRAWING FOR ANY OTHER PURPOSE. USE OF THE DRAWING BEYOND THE INTENDED PURPOSE WILL BE AT USER'S OWN RISK.

ORIGINAL DRAWING BEARS THE REGISTERED PROFESSIONAL ENGINEER SEAL NO.: M26659 AND SIGNATURE OF: FARAMARZ FARASSAT

BART

DESIGNED: BATC		DATE: 09/91
DRAWN: L. Chen		09/08
CHECKED: F. Lee		09/08
APPROVED: Michael K. Blake		09/08

BART FACILITIES STANDARDS MECHANICAL

SYMBOLS
SHEET 1 OF 2

REF. NO.	MS02
SIZE: D	SCALE: NONE
CONTRACT: 15NL-140	REV.: 01
SHEET NO.: MS02	PG. NO.: 037

PLUMBING AND FIRE PROTECTION

SYMBOL	DESCRIPTION
HVA OR HVS	WET STANDPIPE, HOSE VALVE (SIZE AS NOTED)
FDC	FIRE DEPARTMENT CONNECTION (SIZE AS NOTED)
FHC–XX	FIRE HOSE CABINET (TYPE AS NOTED)
FE–XX	PORTABLE FIRE EXTINGUISHER (TYPE AS NOTED)
	AUTOMATIC SPRINKLER RISER
AD–XX CB–XX FD–XX FS–XX HDN–XX PDN–XX	AREA DRAIN (AD) CATCH BASIN (CB) FLOOR DRAIN (FD) FLOOR SINK (FS) HOPPER DRAIN (HDN) PLANTER DRAIN (PDN)
–XX	(TYPE AS NOTED) GRATE FREE AREA x OUTLET (EXAMPLE 12 x 4 = 12 SQ IN x 4 IN DRAIN SIZE)
RD–XX	ROOF DRAIN (TYPE AS NOTED)
OFD–XX	OVERFLOW ROOF DRAIN (TYPE AS NOTED)
WHA	WATER HAMMER ARRESTOR
FCO	FLOOR CLEAN OUT
WCO	WALL CLEAN OUT
EJ	EXPANSION JOINT
	FLEXIBLE PIPE CONNECTOR
	GROOVED COUPLING
	ISOLATING FLANGE (DUAL SHOWN)
	UPRIGHT SPRINKLER HEAD
	PENDENT SPRINKLER HEAD
	FIRE HYDRANT

PLUMBING AND FIRE PROTECTION

SYMBOL	DESCRIPTION
POC	POINT OF CONNECTION
E	SEWAGE EJECTOR
	FAN
	PUMP
	URINAL
WC–XX	WATER CLOSET (TYPE AS NOTED)
LAV–XX	LAVATORY, WALL HUNG (TYPE AS NOTED)
LAV–XX	LAVATORY, COUNTER MOUNTED (TYPE AS NOTED)
DF	DRINKING FOUNTAIN
K	KITCHEN SINK
	MOP SINK, SERVICE SINK
	SHOWER
VAV–XX	VARIABLE AIR DAMPER (TYPE AS NOTED)
EW	EMERGENCY EYE WASH
WH	WATER HEATER
ES/EW	EMERGENCY SHOWER/EYE WASH

SYMBOL	DESCRIPTION

SYMBOL	DESCRIPTION

REV.	DATE	BY	CHK'D.	APP.	DESCRIPTION
01	09/08	LC			REVISED PER BECO EM001537

THIS DRAWING IS INTENDED SOLELY FOR BART USE IN ORDER TO DESIGN, CONSTRUCT, ALTER, OR MAINTAIN ITS FACILITIES. BART DOES NOT RECOMMEND OR WARRANT USE OF THE DRAWING FOR ANY OTHER PURPOSE. USE OF THE DRAWING BEYOND THE INTENDED PURPOSE WILL BE AT USER'S OWN RISK.

ORIGINAL DRAWING BEARS THE REGISTERED PROFESSIONAL ENGINEER SEAL NO.: M26659 AND SIGNATURE OF: FARAMARZ FARASSAT

BART

		DATE:
DESIGNED:		
DRAWN:	L. Cen	09/08
CHECKED:	F. Farassat	09/08
APPROVED:	David M. Jacobs	09/08

BART FACILITIES STANDARDS
MECHANICAL

SYMBOLS
SHEET 2 OF 2

REF. NO.
SIZE: D | SCALE: NONE
CONTRACT: 15NL-140 | REV.: 01
SHEET NO.: MS03 | PG. NO.: 038

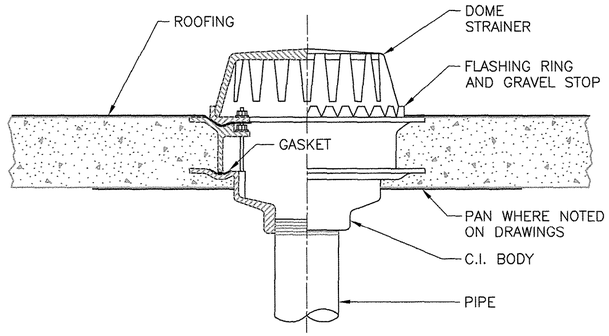

ROOF DRAIN RD–1

DETAIL 1 MS12
SCALE: NTS

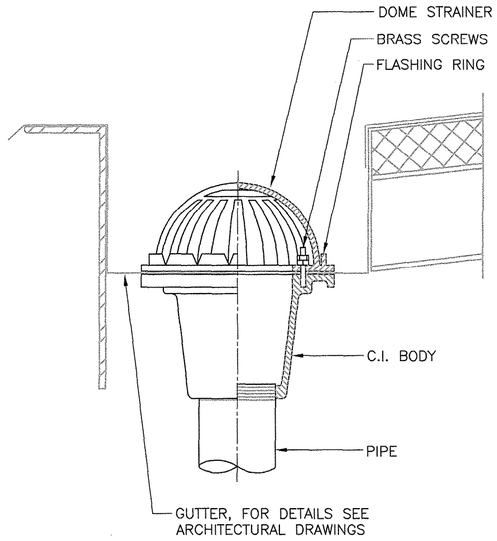

ROOF DRAIN RD–2

DETAIL 2 MS12
SCALE: NTS

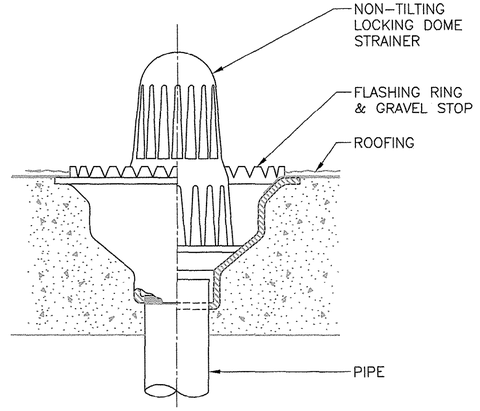

ROOF DRAIN RD–3

DETAIL 3 MS12
SCALE: NTS

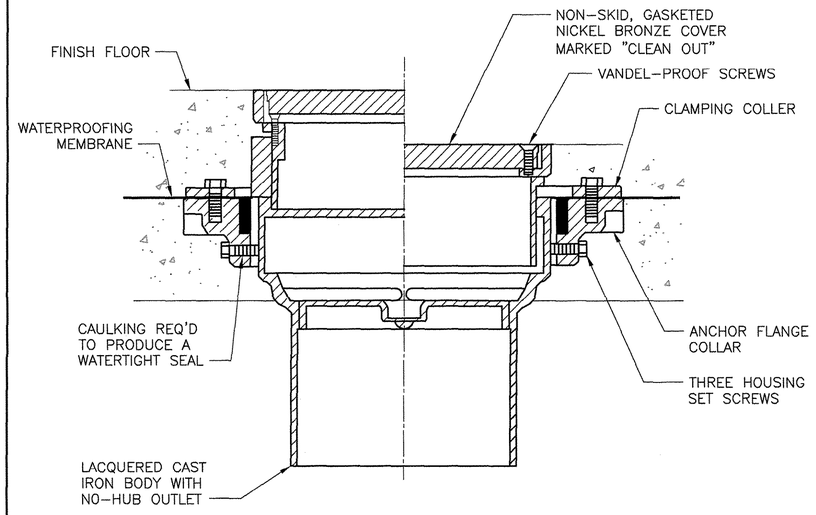

FLOOR CLEANOUT

DETAIL 4 MS12
SCALE: NTS

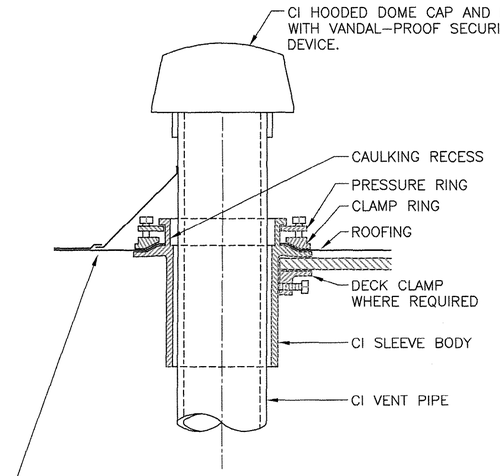

VENT THRU ROOF

DETAIL 5 MS12
SCALE: NTS

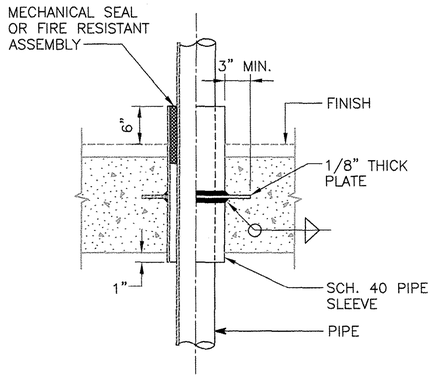

NOTE: GALVANIZE SLEEVE ASSEMBLY AFTER FABRICATION.

INTERIOR PIPE SLEEVE

DETAIL 6 MS12
SCALE: NTS

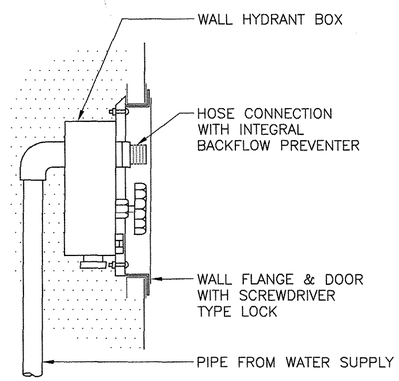

NOTE: FOR SURFACE MOUNT UNITS PROVIDE A STAINLESS STEEL ENCLOSURE

WALL HYDRANT WH–1

DETAIL 7 MS12
SCALE: NTS

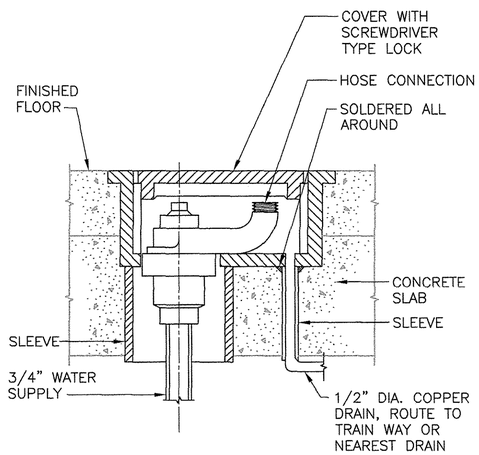

BOX HYDRANT BH–1

DETAIL 8 MS12
SCALE: NTS

REV.	DATE	BY	CKD	APP.	DESCRIPTION
02	11/17/2015	MJD	RA	MB	REVISED PER BECO BFS00266
01	12/2014	LC	RA	MB	REVISED PER BECO BFS00171

THIS DRAWING IS INTENDED SOLELY FOR BART USE IN ORDER TO DESIGN, CONSTRUCT, ALTER, OR MAINTAIN ITS FACILITIES. BART DOES NOT RECOMMEND OR WARRANT USE OF THE DRAWING FOR ANY OTHER PURPOSE. USE OF THE DRAWING BEYOND THE INTENDED PURPOSE WILL BE AT USER'S OWN RISK.

DESIGNED: BATC
DRAWN: L. CHU
CHECKED: R. ANGUIANO
APPROVED: M. BLAKE
DATE: 09/91

REGISTERED PROFESSIONAL ENGINEER MICHAEL C. BLAKE No. M32509 Exp. MECHANICAL STATE OF CALIFORNIA

SAN FRANCISCO BAY AREA RAPID TRANSIT DISTRICT

MANAGER: _____ APPROVED BY: _____

BART FACILITIES STANDARDS MECHANICAL

PLUMBING DETAILS
SHEET 2 OF 3

CADD FILENAME
SIZE: D | SCALE: NTS
CONTRACT NO. 15NL-140 | REV. 02
CONTRACT SHEET NO. MS12 | PAGE NO. 039

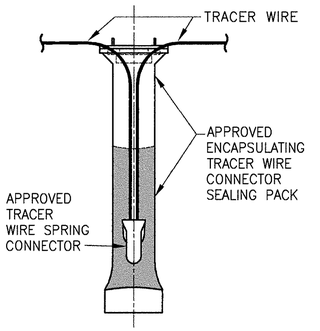

SPLICE KIT DETAIL

NOTES:

1. CONTRACTOR SHALL USE CARE TO PREVENT DAMAGE TO TRACER WIRE WHEN PLACING CONCRETE.
2. ALL TRACER WIRES SHALL BE STRANDED COPPER, A.W.G. NO. 10 WITH U.S.E. RATED INSULATION, COLOR BLACK.
3. TRACER WIRE SPLICES SHALL BE MADE WITH APPROVED CONNECTORS AND ENCAPSULATED IN APPROVED TRACER WIRE CONNECTOR SEALING PACKS OR APPROVED SPLICE KITS. SEE SPLICE KIT DETAIL.
4. TRACER WIRE SHALL BE INTER-CONNECTED AT PIPE TEES AND CROSSES.
5. CONTINUITY TEST SHALL BE CONDUCTED AS DIRECTED BY THE DISTRICT.
6. TRACER WIRE REQUIRED ON ALL NON-METALLIC MAINS AND SERVICE LINES.
7. LEAVE 2'-0" MIN EXCESS WIRE.

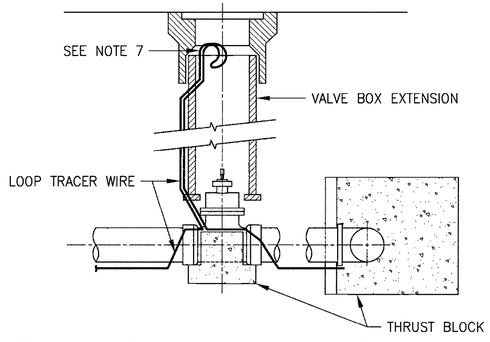

TRACER WIRE FOR MAINS AND VALVES

DETAIL 1 / MS13
SCALE: NTS

NOTES:

1. TIE OFF TRACER WIRE TO SERVICE CORPORATION STOP. DO NOT CONNECT TO WATER MAIN TRACER WIRE.
2. TRACER WIRE SHALL BE INSTALLED ON ALL NON-METALLIC SERVICE LINES.
3. ALL TRACER WIRES SHALL BE STRANDED COPPER, A.W.G. NO. 10 WITH U.S.E. RATED INSULATION, COLOR BLACK.
4. TRACER WIRE SHALL BE ATTACHED TO VERTICAL PORTION OF SERVICE LINE WITH STAINLESS STEEL STRAP OR CLAMP.

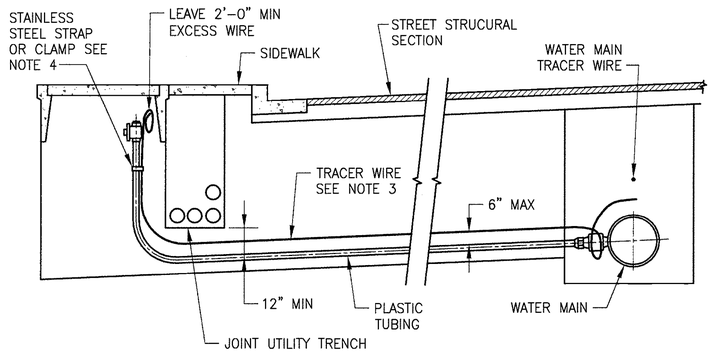

TRACER WIRE FOR SERVICE LINES

DETAIL 2 / MS13
SCALE: NTS

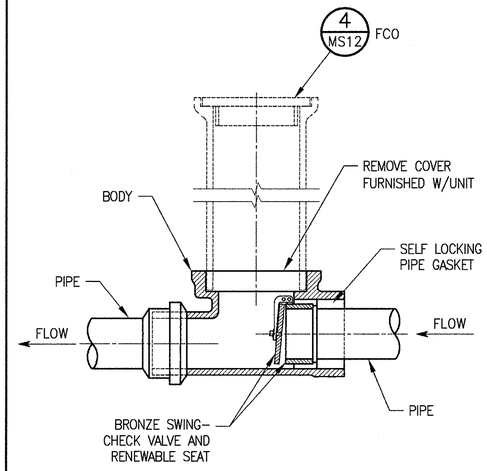

BACKWATER VALVE WITH FLOOR COVER

DETAIL 3 / MS13
SCALE: NTS

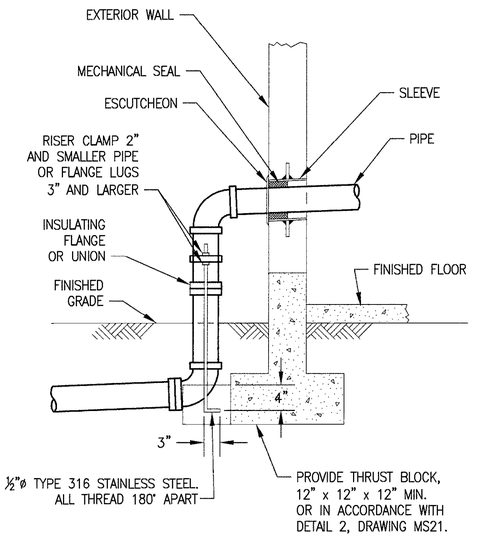

TYPICAL BUILDING PIPE ENTRY

DETAIL 4 / MS13
SCALE: NTS

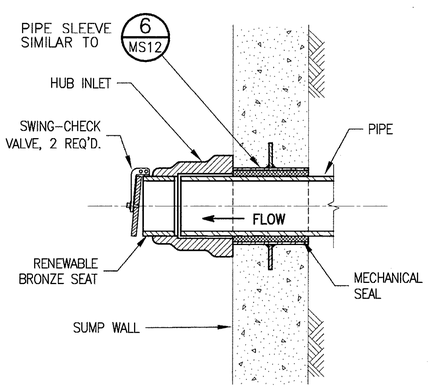

TYPICAL SUMP INLET

DETAIL 5 / MS13
SCALE: NTS

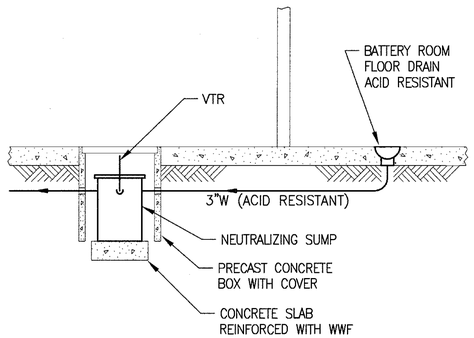

NOTES:

1. LOCATE NEUTRALIZING SUMP IN ACCESSIBLE NON-PUBLIC AREA.
2. PROVIDE TRAP AND VENT PER CODE, EXTEND ACID RESISTANT "W" TO NEUTRALIZING SUMP.

BATTERY ROOM FLOOR DRAIN

DETAIL 6 / MS13
SCALE: NTS

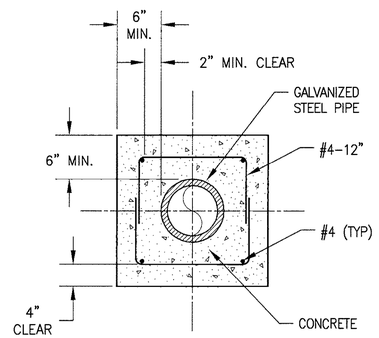

TYPICAL SLEEVE ENCASEMENT DETAIL

DETAIL 7 / MS13
SCALE: NTS

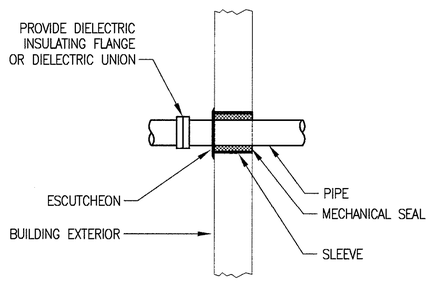

TYPICAL BUILDING PIPE EXIT

DETAIL 8 / MS13
SCALE: NTS

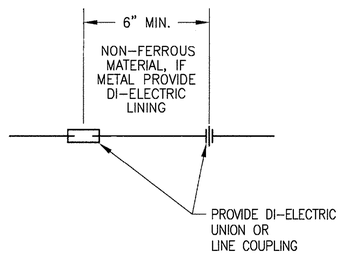

DI-ELECTRIC LINE SECTION
PIPE SIZES 2" AND SMALLER

DETAIL 9 / MS13
SCALE: NTS

REV.	DATE	BY	CHKD.	APP.	DESCRIPTION
02	09/11	[illegible]	[illegible]	[illegible]	REVISED PER BECO BFS00104

THIS DRAWING IS INTENDED SOLELY FOR BART USE IN ORDER TO DESIGN, CONSTRUCT, ALTER, OR MAINTAIN ITS FACILITIES. BART DOES NOT RECOMMEND OR WARRANT USE OF THE DRAWING FOR ANY OTHER PURPOSE. USE OF THE DRAWING BEYOND THE INTENDED PURPOSE WILL BE AT USER'S OWN RISK.

DESIGNED: BATC
DRAWN: L. CHU
CHECKED: B. YEE
APPROVED: P. PLECNIK
DATE: 09/08

ORIGINAL DRAWING BEARS THE REGISTERED PROFESSIONAL ENGINEER SEAL NO.: M31027 AND SIGNATURE OF: KATY TSENG

SAN FRANCISCO BAY AREA RAPID TRANSIT DISTRICT

MANAGER: _____

APPROVED BY: _____

BART FACILITIES STANDARDS MECHANICAL

PLUMBING DETAILS
SHEET 3 OF 3

CADD FILENAME

SIZE: D | SCALE: NOTED

CONTRACT NO. 15NL-140 | REV. 02

CONTRACT SHEET NO. MS13 | PAGE NO. 040

When the Standards do not specifically cover requirements of a subject, the prevailing code, industry standard, and best practices shall govern.

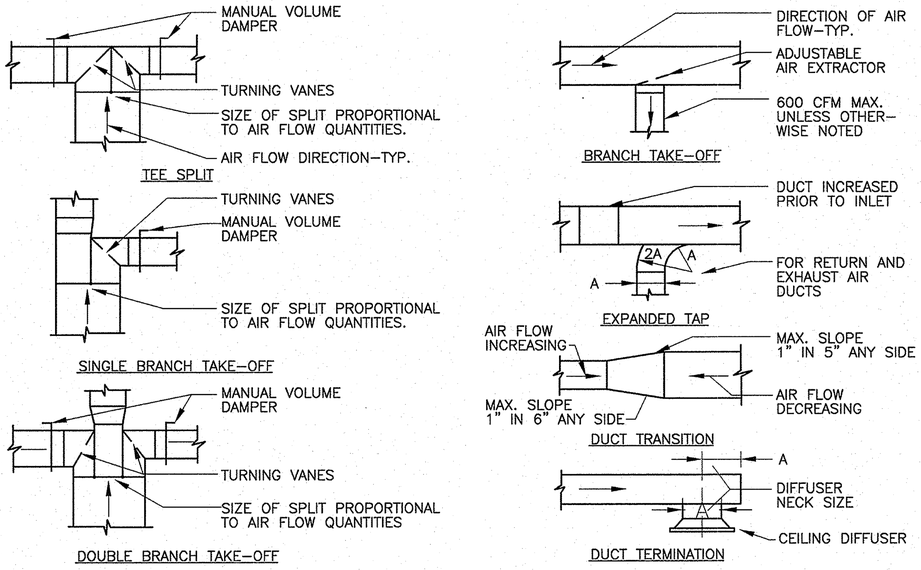

TYPICAL RECTANGULAR DUCT FITTING DETAIL

DETAIL 1 MS31
SCALE: NTS

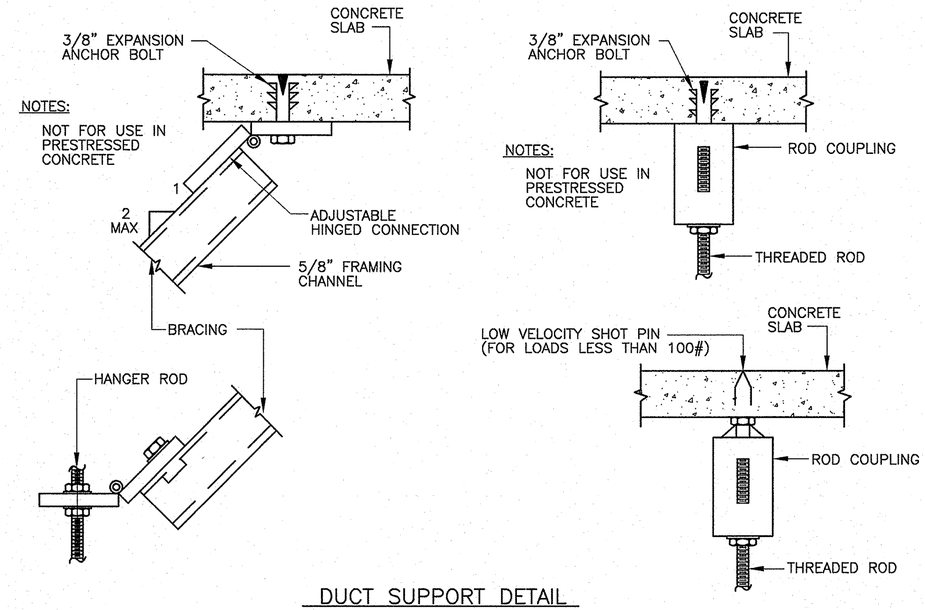

DUCT SUPPORT DETAIL

DETAIL 3 MS31
SCALE: NTS

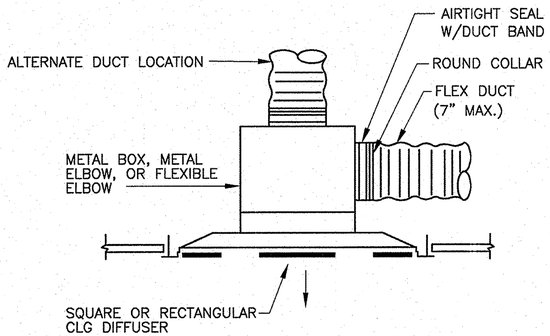

FLEXIBLE DUCT TO CEILING DIFFUSER

DETAIL 2 MS31
SCALE: NTS

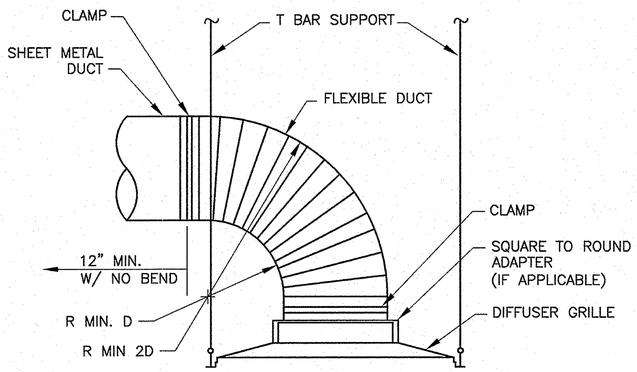

NOTES:

FLEXIBLE DUCTS MODEL NO. GKM BY FLEXIBLE TECHNOLOGIES. FLAME SPREAD AND FLAME CONTRIBUTION RATINGS: 25–50 (OR EQUAL.)

CEILING DIFFUSER DETAIL

DETAIL 4 MS31
SCALE: NTS

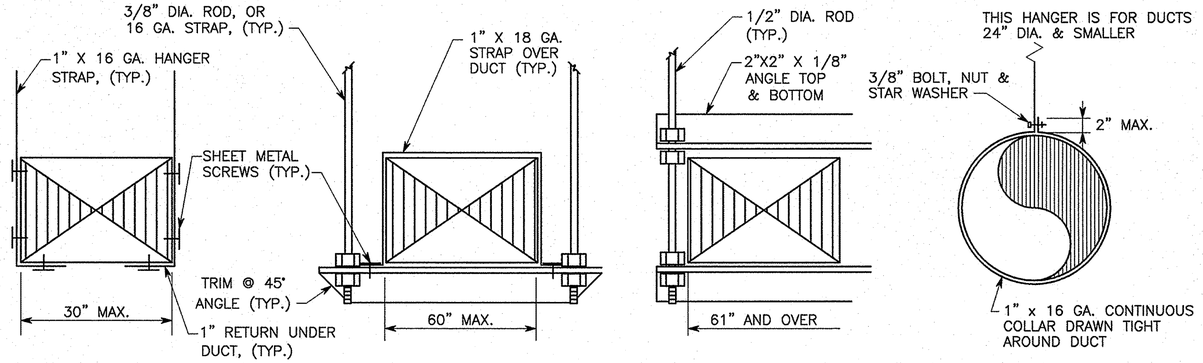

NOTES:

REFER TO SPECIFICATIONS FOR HANGER SPACINGS.

ATTACHMENTS TO OVERHEAD STRUCTURE SHALL BE MADE IN ACCORDANCE WITH ENGINEERS REQUIREMENTS AND LOADING SHALL NOT EXCEED 10 POUNDS PER SQUARE FOOT. ALL ATTACHMENT TO STRUCTURE SHALL BE SUBMITTED TO ENGINEER.

PROVIDE SWAY & SEISMIC BRACING PER SMACNA SEISMIC GUIDELINES.

DUCT HANGER DETAIL

DETAIL 5 MS31
SCALE: NTS

REV.	DATE	BY	CHKD.	APP.	DESCRIPTION
01	09/08	LC	MG		REVISED PER BECO EM001537

THIS DRAWING IS INTENDED SOLELY FOR BART USE IN ORDER TO DESIGN, CONSTRUCT, ALTER, OR MAINTAIN ITS FACILITIES. BART DOES NOT RECOMMEND OR WARRANT USE OF THE DRAWING FOR ANY OTHER PURPOSE. USE OF THE DRAWING BEYOND THE INTENDED PURPOSE WILL BE AT USER'S OWN RISK.

ORIGINAL DRAWING BEARS THE REGISTERED PROFESSIONAL ENGINEER SEAL NO.: M26659 AND SIGNATURE OF: FARAMARZ FARASSAT

BART

		DATE:
DESIGNED:		
DRAWN:		09/08
CHECKED:		09/08
APPROVED:		09/08

BART FACILITIES STANDARDS MECHANICAL

HVAC DETAILS

REF. NO.	
SIZE: D	SCALE: NONE
CONTRACT: 15NL-140	REV.: 01
SHEET NO.: MS31	PG. NO.: 041

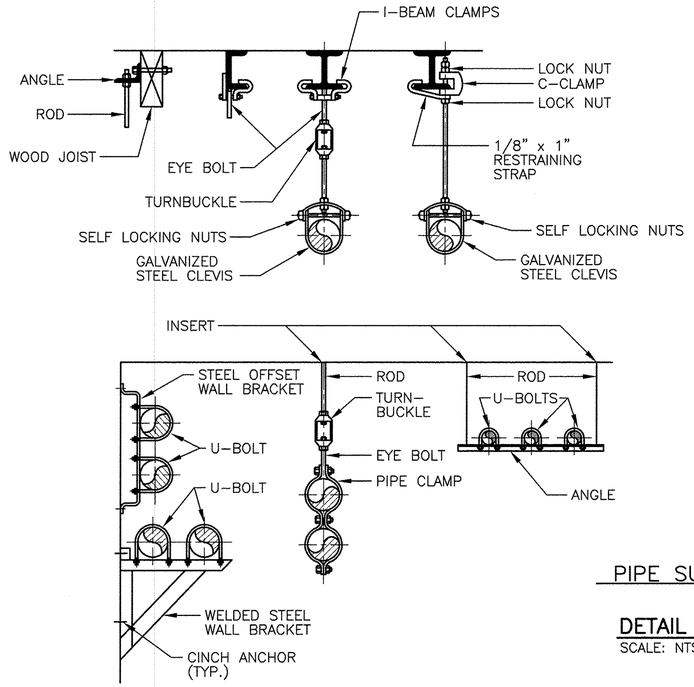

PIPE SUPPORT DETAIL

DETAIL 1 / MS32
SCALE: NTS

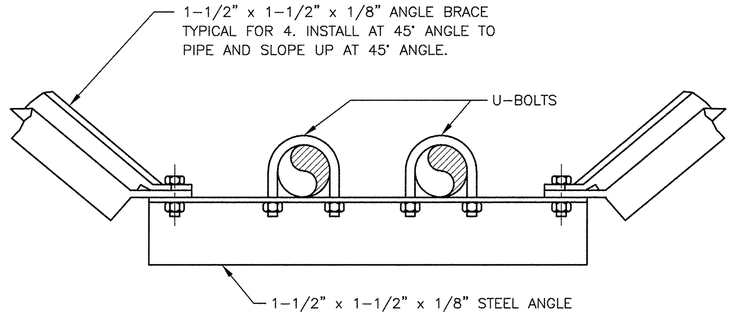

MULTIPLE PIPE TRANSVERSE/LONGITUDINAL SEISMIC ANCHOR DETAIL

DETAIL 2 / MS32
SCALE: NTS

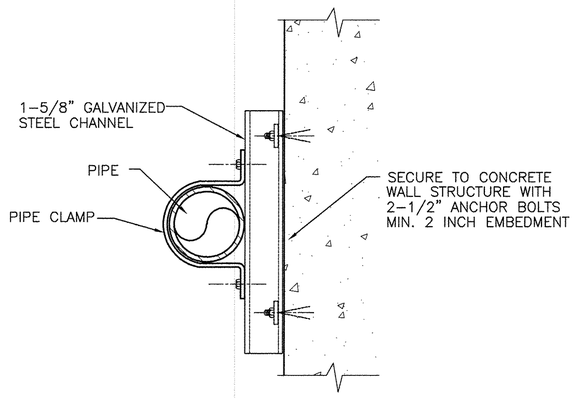

TYPICAL PIPE SUPPORT

DETAIL 3 / MS32
SCALE: NTS

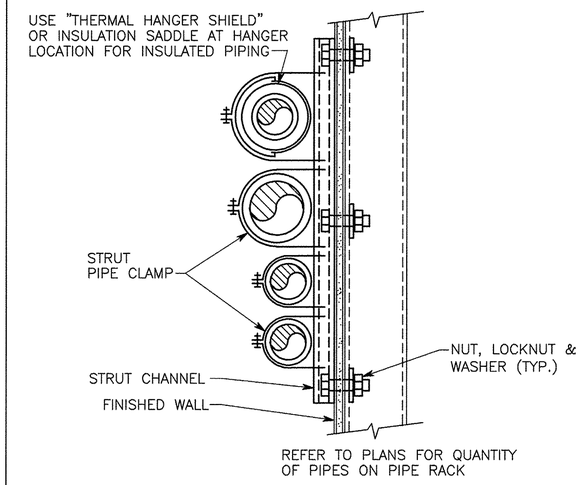

WALL MOUNTED PIPE RACK DETAIL

DETAIL 4 / MS32
SCALE: NTS

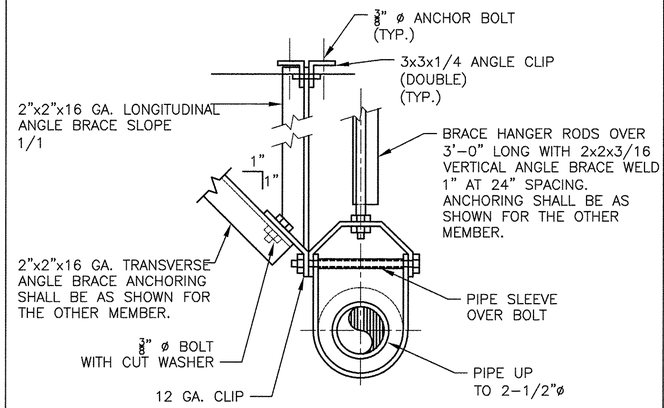

PIPE BRACING DETAIL

DETAIL 5 / MS32
SCALE: NTS

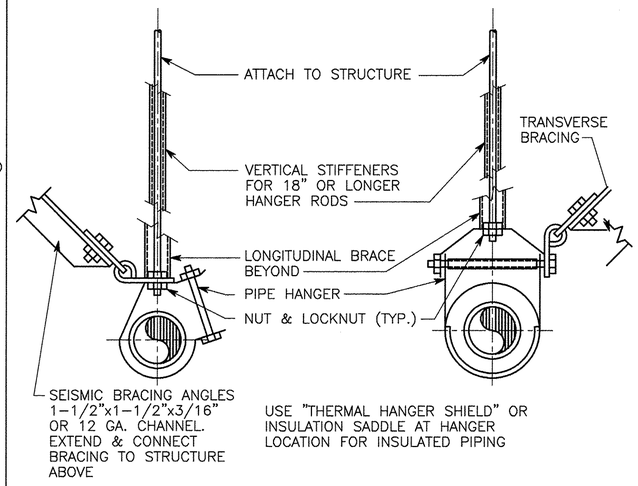

PIPE HANGERS DETAIL

DETAIL 6 / MS32
SCALE: NTS

REV.	DATE	BY	CKD	APP.	DESCRIPTION
02	02/18	[illegible]	[illegible]	[illegible]	REVISED PER BECO BFS00500
01	09/08	LC	BY	MCB	REVISED PER BECO EM001537

THIS DRAWING IS INTENDED SOLELY FOR BART USE IN ORDER TO DESIGN, CONSTRUCT, ALTER, OR MAINTAIN ITS FACILITIES. BART DOES NOT RECOMMEND OR WARRANT USE OF THE DRAWING FOR ANY OTHER PURPOSE. USE OF THE DRAWING BEYOND THE INTENDED PURPOSE WILL BE AT USER'S OWN RISK.

DESIGNED:
DRAWN: L. CHU
CHECKED: B. YEE
APPROVED: MICHAEL C. BLAKE
DATE: 09/08

REGISTERED PROFESSIONAL ENGINEER BERNARD ROBERT SMITS No. M29962 Exp. 6/30/18 MECHANICAL STATE OF CALIFORNIA

SAN FRANCISCO BAY AREA RAPID TRANSIT DISTRICT

MANAGER: _____ APPROVED BY: _____

BART FACILITIES STANDARDS MECHANICAL

PIPING DETAILS

CADD FILENAME
SIZE: D | SCALE: NONE
CONTRACT NO. 15NL-140 | REV. 02
CONTRACT SHEET NO. MS32 | PAGE NO. 042

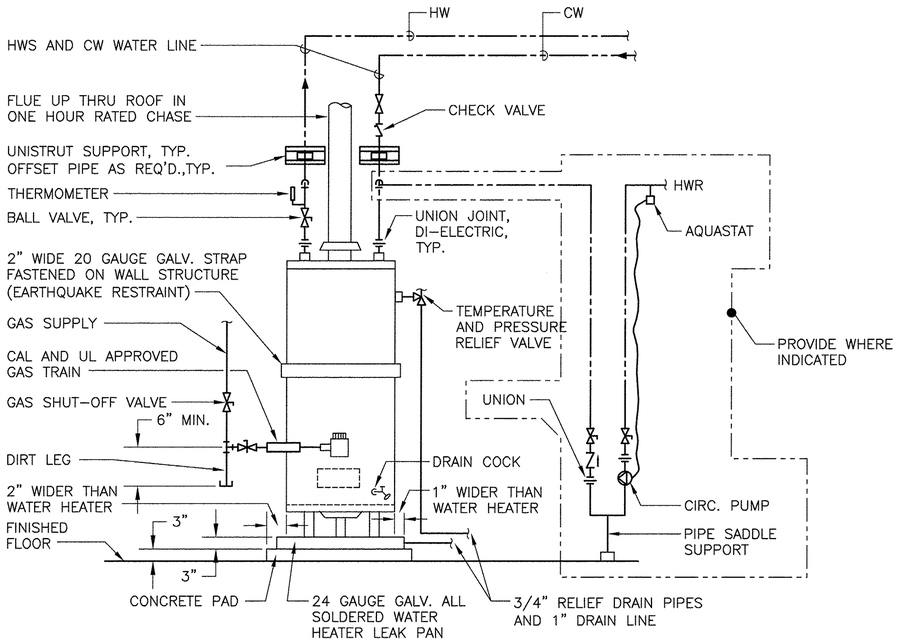

GAS WATER HEATER

DETAIL 1 / MS33
SCALE: NTS

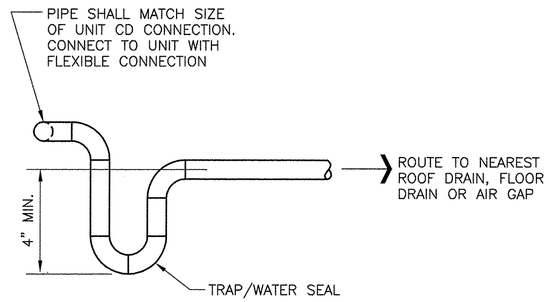

EXTERNALLY TRAPPED CONDENSATE DRAIN PIPING

DETAIL 2 / MS33
SCALE: NTS

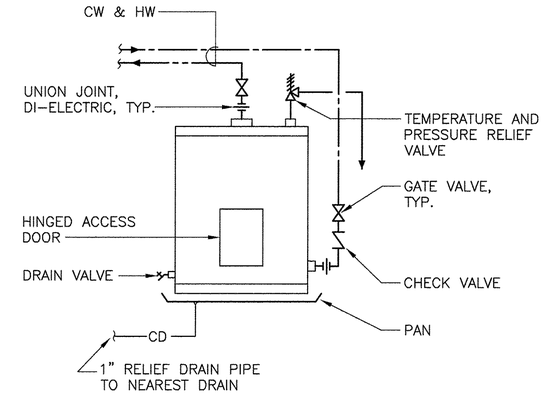

ELECTRIC WATER HEATER

DETAIL 3 / MS33
SCALE: NTS

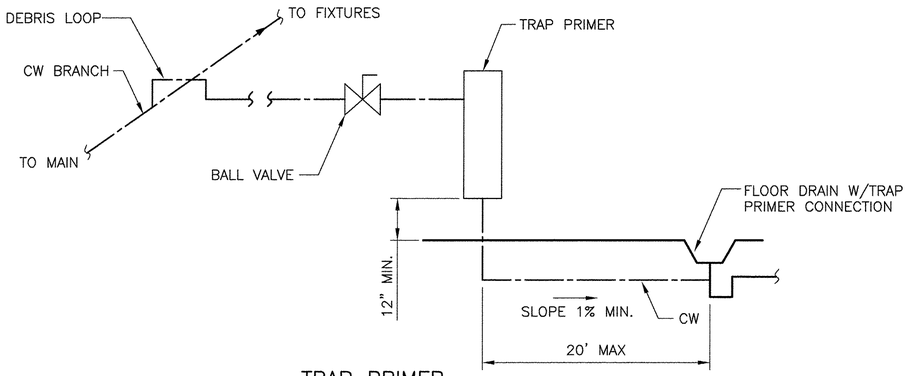

TRAP PRIMER

DETAIL 4 / MS33
SCALE: NTS

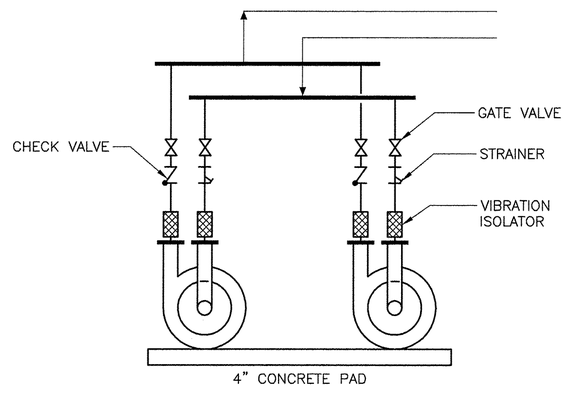

HORIZONTAL PUMP PIPING DIAGRAM

DETAIL 5 / MS33
SCALE: NTS

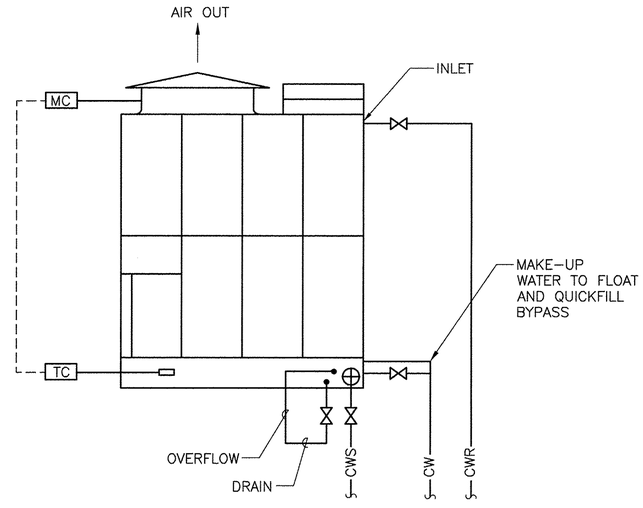

COOLING TOWER PIPING DIAGRAM

DETAIL 6 / MS33
SCALE: NTS

REV.	DATE	BY	CKD	APP.	DESCRIPTION
03	11/19/2015	LC	BY	MB	REVISED PER BECO BFS00265
02	12/2014	LC	BY	MB	REVISED PER BECO BFS00171

THIS DRAWING IS INTENDED SOLELY FOR BART USE IN ORDER TO DESIGN, CONSTRUCT, ALTER, OR MAINTAIN ITS FACILITIES. BART DOES NOT RECOMMEND OR WARRANT USE OF THE DRAWING FOR ANY OTHER PURPOSE. USE OF THE DRAWING BEYOND THE INTENDED PURPOSE WILL BE AT USER'S OWN RISK.

DESIGNED:
DRAWN: L. CHU
CHECKED: B. YEE
APPROVED: M. BLAKE
DATE: 09/08

ORIGINAL DRAWING BEARS THE REGISTERED PROFESSIONAL ENGINEER SEAL NO.: M26659 AND SIGNATURE OF: FARAMARZ FARASSAT

SAN FRANCISCO BAY AREA RAPID TRANSIT DISTRICT

BART

MANAGER: _____

BART

APPROVED BY: _____

BART FACILITIES STANDARDS MECHANICAL

MECHANICAL EQUIPMENT DETAILS

CADD FILENAME

SIZE: D | SCALE: NTS

CONTRACT NO. 15NL-140 | REV. 03

CONTRACT SHEET NO. MS33 | PAGE NO. 043

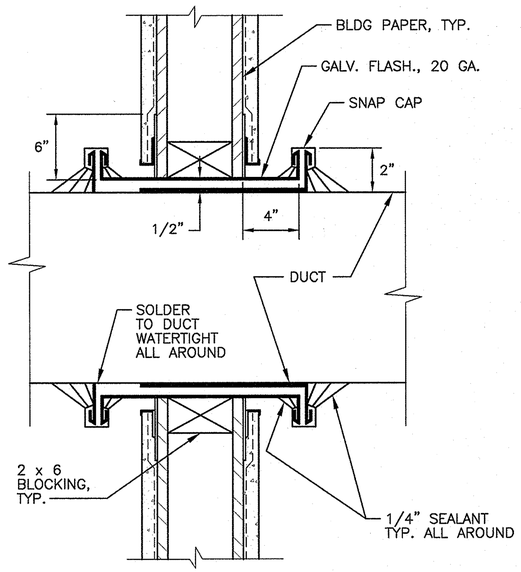

DUCT THROUGH WALL

DETAIL 1 — SCALE: NTS — MS35

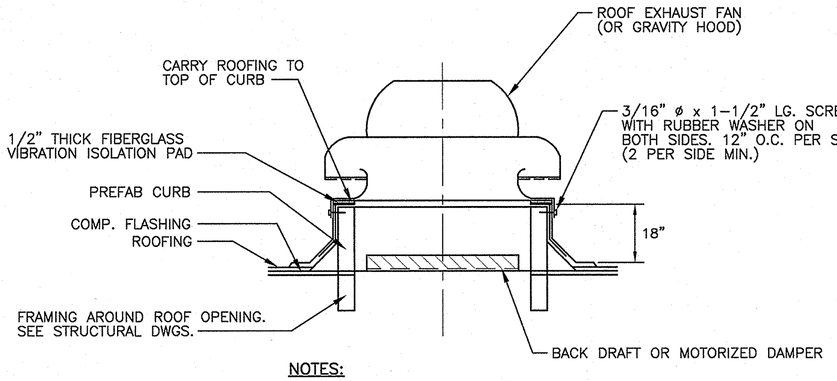

NOTES:

1. TOP OF CURB MUST BE LEVELED. SHIM BOTTOM OF CURB AS REQUIRED.
2. GRAVITY HOOD MOUNTING SIMILAR EXCEPT WITHOUT BACKDRAFT DAMPER.

EXHAUST FAN MOUNTING

DETAIL 2 — SCALE: NTS — MS35

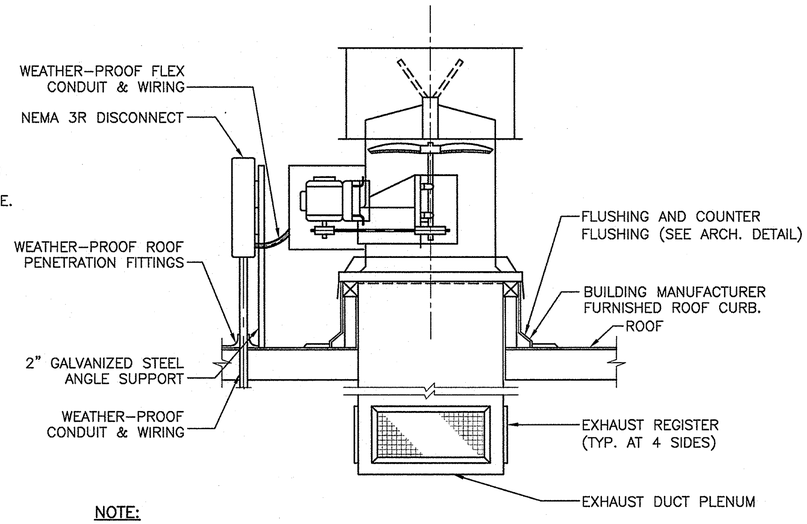

NOTE:

1. ELEVATION OF BOTTOM OF PLENUM SHALL CLEAR TOP OF. CLEARANCE ENVELOPE.

PROPELLER TYPE EXHAUST FAN

DETAIL 3 — SCALE: NTS — MS35

PROVIDE FIRE WALL OPENING A MINIMUM OF 1/8" PER FOOT OF WIDTH LARGER THAN THE OVERALL SIZE OF THE DAMPER AND SLEEVE ASSEMBLY. THE MAXIMUM OPENING SIZE SHALL NOT EXCEED 1/8" PER FOOT OF WIDTH PLUS 1" AND THE MINIMUM SHALL BE 1/4" LARGER THAN ANY SIZE DAMPER AND SLEEVE ASSEMBLY. INSTALL FIRE-STOP MATERIAL IN SPACE AROUND DAMPER

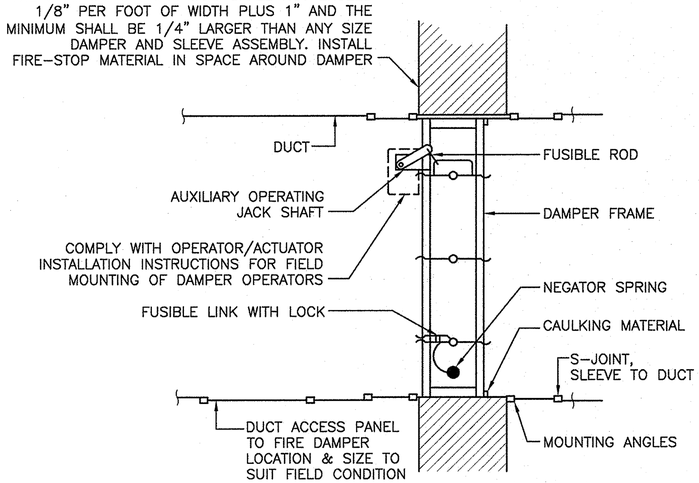

COMBINATION FIRE/SMOKE DAMPER DETAIL

DETAIL 4 — SCALE: NTS — MS35

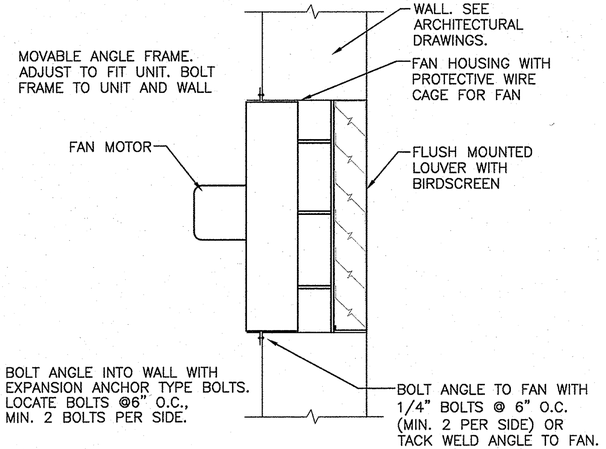

WALL MOUNTED EXHAUST FAN

DETAIL 5 — SCALE: NTS — MS35

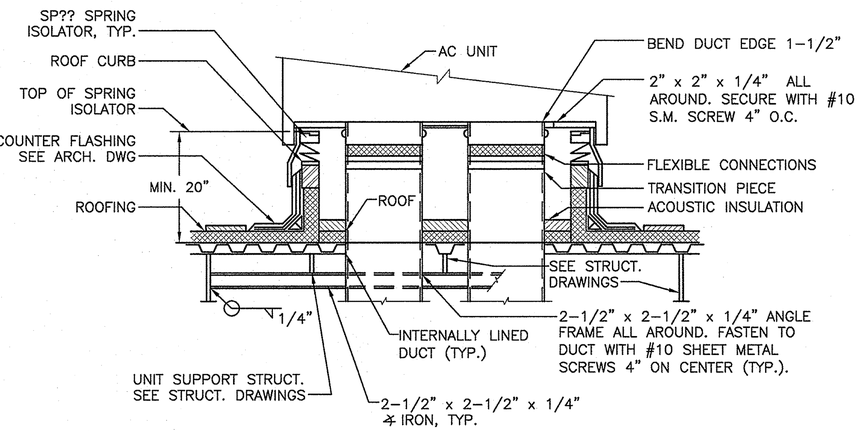

ROOF TOP AC UNIT MOUNTING DETAIL

DETAIL 6 — SCALE: NTS — MS35

REV.	DATE	BY	CHKD.	APP.	DESCRIPTION
01	09/08	LC	MB	MB	REVISED PER BECO EM001537

THIS DRAWING IS INTENDED SOLELY FOR BART USE IN ORDER TO DESIGN, CONSTRUCT, ALTER, OR MAINTAIN ITS FACILITIES. BART DOES NOT RECOMMEND OR WARRANT USE OF THE DRAWING FOR ANY OTHER PURPOSE. USE OF THE DRAWING BEYOND THE INTENDED PURPOSE WILL BE AT USER'S OWN RISK.

ORIGINAL DRAWING BEARS THE REGISTERED PROFESSIONAL ENGINEER SEAL NO.: M26659 AND SIGNATURE OF: FARAMARZ FARASSAT

BART

		DATE
DESIGNED:		
DRAWN:	J. Lee	09/08
CHECKED:	F. Farassat	09/08
APPROVED:	Michael Black	09/08

BART FACILITIES STANDARDS MECHANICAL

HVAC DETAILS

REF. NO.

SIZE: D | SCALE: NONE

CONTRACT: 15NL-140 | REV.: 01

SHEET NO.: MS35 | PG. NO.: 044

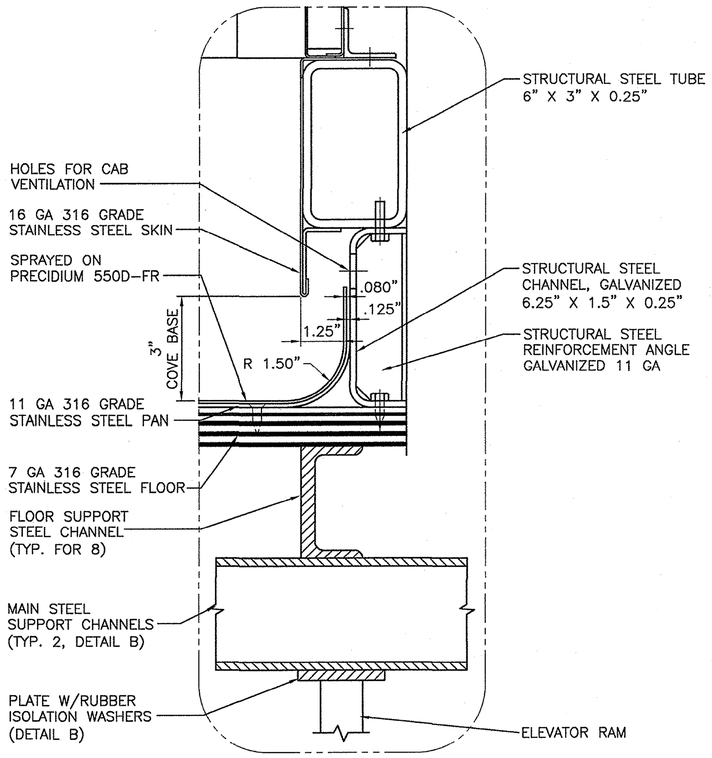

ELEVATOR FLOOR/COVING DETAIL 1 / MS39

SCALE: NTS

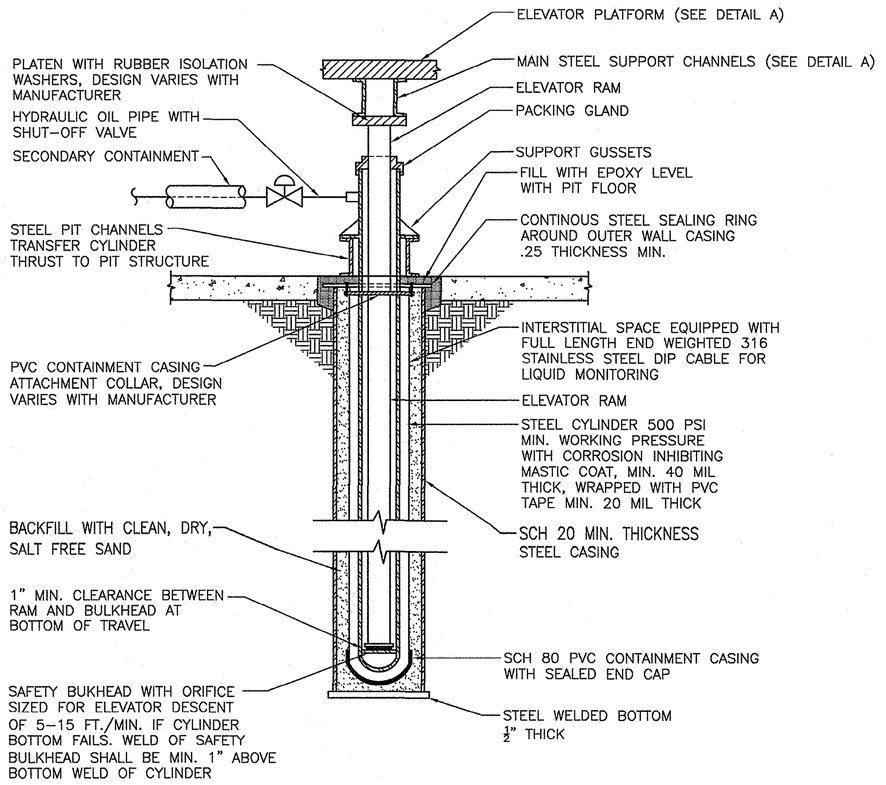

NOTE: HYDRAULIC ELEVATORS SHALL COMPLY WITH BFS SECTION 14.24.00

HYDRAULIC ELEVATOR CYLINDER/PLUNGER INSTALLATION 2 / MS39

SCALE: NTS

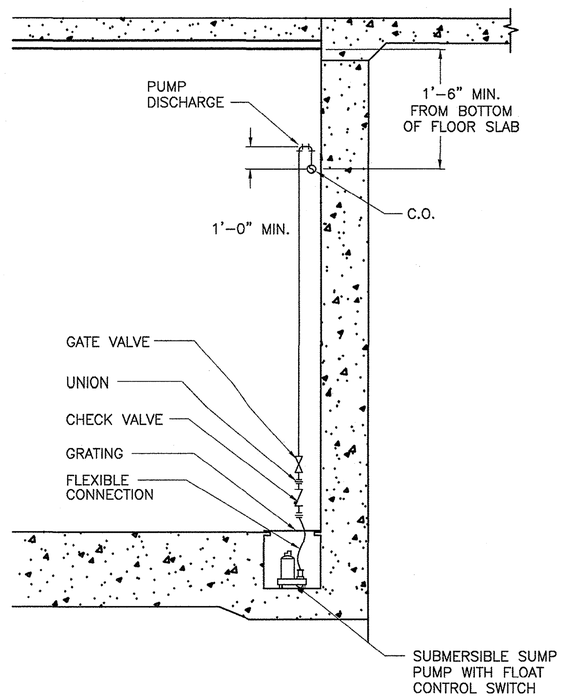

SUMP PUMP DETAILS 3 / MS39

SCALE: 1/2"=1'-0"

REV.	DATE	BY	CHKD	APP.	DESCRIPTION
03	07/10				REVISED PER BECO BFS00075

THIS DRAWING IS INTENDED SOLELY FOR BART USE IN ORDER TO DESIGN, CONSTRUCT, ALTER, OR MAINTAIN ITS FACILITIES. BART DOES NOT RECOMMEND OR WARRANT USE OF THE DRAWING FOR ANY OTHER PURPOSE. USE OF THE DRAWING BEYOND THE INTENDED PURPOSE WILL BE AT USER'S OWN RISK.

DESIGNED:
DRAWN: R. VERSHER
CHECKED: B. YEE
APPROVED: B. KING
DATE: 04/07

ORIGINAL DRAWING BEARS THE REGISTERED PROFESSIONAL ENGINEER SEAL NO.: M31027 AND SIGNATURE OF: KATY TSENG

SAN FRANCISCO BAY AREA RAPID TRANSIT DISTRICT

BART

MANAGER: _____

BART

APPROVED BY: _____

BART FACILITIES STANDARDS MECHANICAL

MECHANICAL EQUIPMENT DETAILS

CADD FILENAME

SIZE: D | SCALE: AS NOTED

CONTRACT NO. 15NL-140 | REV. 03

CONTRACT SHEET NO. MS39 | PAGE NO. 045

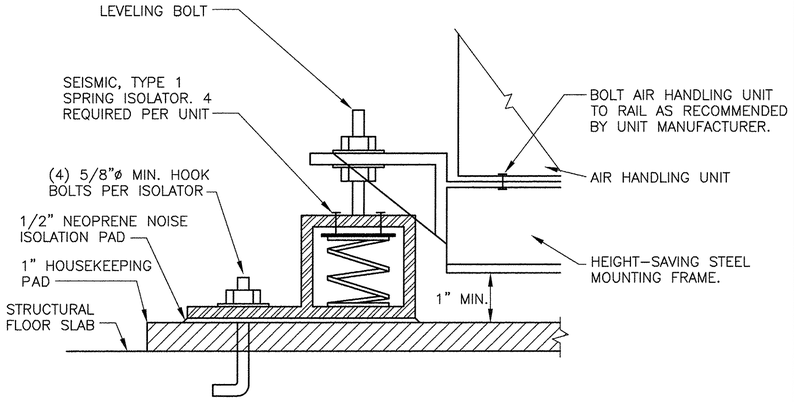

MOUNTING DETAIL

DETAIL 1 / MS57
SCALE: NTS

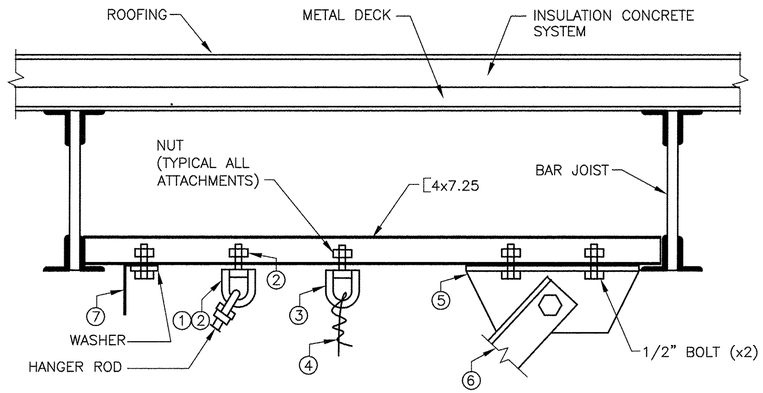

NOTES:
1. SWIVEL HANGER (PAIR). FEMALE AND MALE
2. CONNECTIONS. SIZE AS REQUIRED FOR HANGER ROD.
3. SWIVEL HANGER. MALE CONNECTION ONLY.
4. 12 GAUGE WIRE.
5. GUSSETTED SHELF ANGLE.
6. BRACING ANGLE FOR PIPES OR DUCTS.
7. MIN. 16 GAUGE HANGER STRAP.

ATTACHMENTS TO ROOF STRUCTURE
(MAX. 2 ATTACHMENTS PER CHANNEL)

DETAIL 2 / MS57
SCALE: NTS

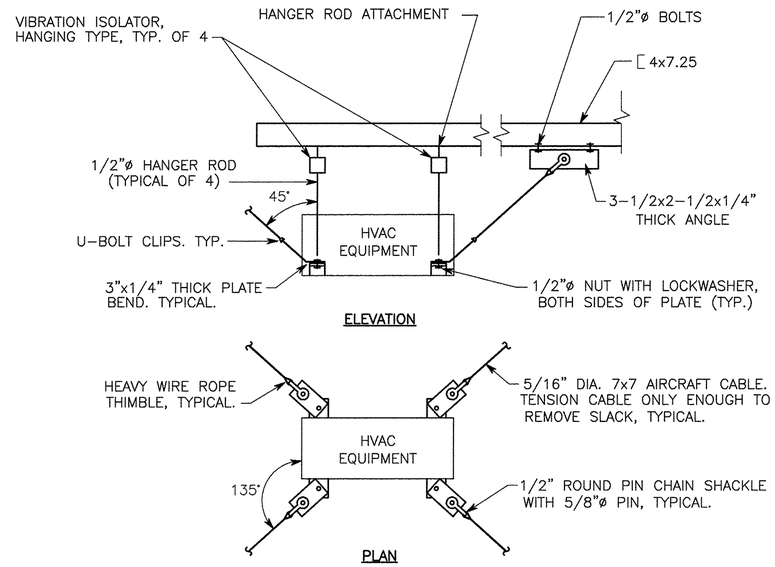

SUSPENDED HVAC EQUIPMENT MOUNTING

DETAIL 3 / MS57
SCALE: NTS

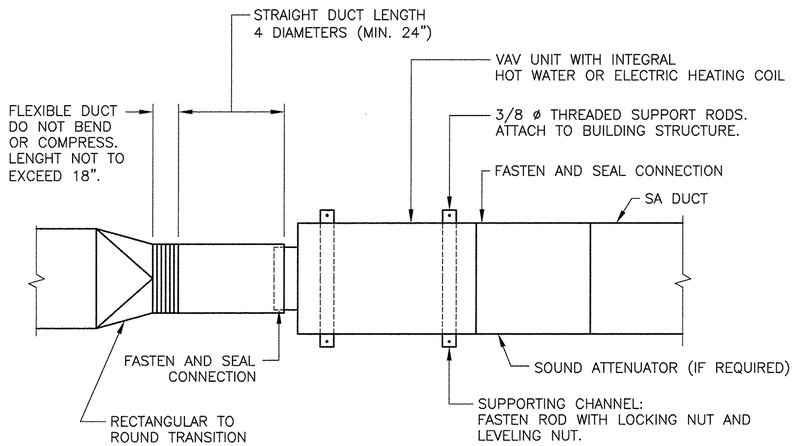

NOTES:

1. THE OPERATION OF VARIABLE VOLUME TERMINAL UNITS ARE AFFECTED BY EXCESSIVE TURBULENCE ON THE ENTERING SIDE OF EACH TERMINAL UNIT. THEREFORE, TERMINAL UNITS SHALL NOT BE INSTALLED TOO CLOSE TO MAIN DUCTS, ELBOWS, AND FITTINGS.
2. WHEN MINIMUM UPSTREAM STRAIGHT DUCT CONNECTION TO TERMINALS AS INDICATED ABOVE CANNOT BE MAINTAINED, PROVIDE ORIFICE PLATE STRAIGHTENING VANES OR OTHER DEVICE AS RECOMMENDED BY TERMINAL UNIT MANUFACTURER AND SUBMIT TO ENGINEER FOR REVIEW PRIOR TO INSTALLATION.
3. MANUFACTURER OF TERMINAL UNIT SHALL PROVIDE CONTROLS ON LEFT OR RIGHT SIDE AS REQUIRED BY FIELD CONDITIONS.
4. ARRANGE CLEAR ACCESS TO PERMIT EASY FIELD BALANCE AND MAINTENANCE OF TERMINAL UNITS.
5. USE OF ACOUSTICAL DUCT LINER IS NOT ALLOWED.

VARIABLE AIR VOLUME BOX DETAIL

DETAIL 4 / MS57
SCALE: NTS

REV.	DATE	BY	CKD	APP.	DESCRIPTION
02	11/9/2015	LC	RA	MB	REVISED PER BECO BFS00257
01	12/9/2014	LC	RA	MB	REVISED PER BECO BFS00171

THIS DRAWING IS INTENDED SOLELY FOR BART USE IN ORDER TO DESIGN, CONSTRUCT, ALTER, OR MAINTAIN ITS FACILITIES. BART DOES NOT RECOMMEND OR WARRANT USE OF THE DRAWING FOR ANY OTHER PURPOSE. USE OF THE DRAWING BEYOND THE INTENDED PURPOSE WILL BE AT USER'S OWN RISK.

DESIGNED:
DRAWN: L. CHU
CHECKED: B. YEE
APPROVED: B. SMITS
DATE: 09/08

ORIGINAL DRAWING BEARS THE REGISTERED PROFESSIONAL ENGINEER SEAL NO.: M29962 AND SIGNATURE OF: BERNARD ROBERT SMITS

SAN FRANCISCO BAY AREA RAPID TRANSIT DISTRICT

BART
MANAGER: _____

BART
APPROVED BY: _____

BART FACILITIES STANDARDS MECHANICAL

HVAC DETAILS

CADD FILENAME
SIZE: D | SCALE: NTS
CONTRACT NO.: 15NL-140 | REV.: 02
CONTRACT SHEET NO.: MS57 | PAGE NO.: 046

ABBREVIATIONS

A	AMPERE
AC	ALTERNATING CURRENT
AFF	ABOVE FINISHED FLOOR
AIC	AMPERE INTERRUPTING CURRENT
C	CONDUIT
CCTV	CLOSED CIRCUIT TELEVISION SYSTEM
CO	CONDUIT ONLY
CAB	CABINET
CKT	CIRCUIT
CPB	COMMUNICATION PULL BOX
CU	COPPER
DIA	DIAMETER
DWG	DRAWING
(E)	EXISTING
EA	EACH
ELEV	ELEVATOR
EPB	ELECTRICAL PULL BOX
FT	FEET
FSD	FIRE SMOKE DAMPER
GFI	GROUND FAULT CURRENT INTERRUPTER
GND	GROUND
GRS	GALVANIZED RIGID STEEL
HP	HORSE POWER
Hz, HZ	HERTZ (CYCLES PER SECOND)
IC	INTERRUPTING CURRENT
KA	KILOAMPERE
KAIC	KILOAMPERE INTERRUPTIBLE CURRENT
KVA	KILO-VOLT-AMPERE
KW	KILOWATT
LED	LIGHT EMITTING DIODE
LT	LIGHT
MAX	MAXIMUM
MCA	MINIMUM CIRCUIT AMPERE
MIN	MINIMUM
MC	MEDIA CONVERTER
(N)	NEW
N.T.S.	NOT TO SCALE
PLC	PROGRAMMABLE LOGIC CONTROLLER
PBX	PRIVATE BRANCH EXCHANGE
QTY	QUANTITY
(R)	REMOVE
RM	ROOM
S	SWITCH
SP	SUMP PUMP
TYP	TYPICAL
U.O.N.	UNLESS OTHERWISE NOTED
V	VOLT
VA	VOLTS AMPERE
VAC	VOLTS ALTERNATING CURRENT
VOIP	VOICE OVER INTERNET PROTOCOL
W	WATT
WP	WEATHERPROOF

ELECTRICAL SYMBOLS

	(E) CONDUIT AND WIRING
	CONDUIT AND WIRING TO BE REMOVED
	HOMERUN CONDUIT TO PANELBOARD, SLASH MARKS INDICATE NUMBER OF #12 WIRES, 2#12 & 1#12 GND IN 3/4"C IF NOT MARKED GROUND WIRING NOT SHOWN
	CONDUIT AND WIRING, SLASH MARKS INDICATE NUMBER OF #12 WIRES, 2#12 & 1#12 GND IN 3/4"C IF NOT MARKED GROUND WIRING NOT SHOWN
	INDICATES EQUIPMENT CONNECTION
	CONDUIT STUB
	CONDUIT GOING UP
	CONDUIT GOING DOWN
	WALL MOUNTED DUPLEX RECEPTACLE.
GFI	DUPLEX RECEPTACLE, WITH GROUND FAULT CIRCUIT INTERRUPTER.
J , J	JUNCTION BOX SIZE TO SUIT - CEILING MOUNTED, WALL MOUNTED RESPECTIVELY
PS	POWER SUPPLY
	CEILING OR PENDANT MOUNTED LINEAR LED LIGHT FIXTURE
	WALL MOUNTED LINEAR LED LIGHT FIXTURE
	WALL/COLUMN MOUNTED LED LIGHT FIXTURE
,	CEILING MOUNTED LIGHT FIXTURE, EXISTING, NEW RESPECTIVELY
$	SINGLE POLE WALL MOUNTED LIGHT SWITCH, +48"AFF
90A	FUSED DISCONNECT SWITCH, HP RATED
	NON-FUSED DISCONNECT SWITCH, HP RATED
$T , $T	MANUAL MOTOR STARTER, EXISTING, NEW RESPECTIVELY
	(E) MAIN SWITCHBOARD
	(E) PANELBOARD
	SURFACE MOUNTED 480/277V PANELBOARD
	SURFACE MOUNTED 208/120V PANELBOARD
M , M	MOTOR - EXISTING, NEW RESPECTIVELY
ST	CIRCUIT BREAKER SHUNT TRIP
T ,	STEP DOWN TRANSFORMER
100/50A , 100/90A	MOLDED CASE CIRCUIT BREAKER, CURRENT TRIP VALUE INDICATED BELOW LINE AND BREAKER FRAME SIZE ABOVE LINE - EXISTING , NEW RESPECTIVELY

ELECTRICAL SYMBOLS CONTINUED

3KXXX	CABLE SCHEDULE IDENTIFICATION TAG . SEE SHEET E004.
3CXXX	CONDUIT SCHEDULE IDENTIFICATION TAG. SEE SHEET E005.
A / 33	INDICATES TYPE LIGHTING FIXTURE IDENTIFICATION TAG INDICATES WATTS
	MECHANICAL & PLUMBING EQUIPMENT TAG. SEE MECHANICAL & PLUMBING SCHEDULE FOR DESCRIPTION AND REQUIREMENT.
1 / E103	DETAIL/DIAGRAM NUMBER DETAIL/DIAGRAM IDENTIFICATION TAG SHEET NUMBER DETAIL/DIAGRAM IS SHOWN
1	SHEET NOTE IDENTIFICATION TAG

GENERAL NOTES

1. MINIMUM SIZE OF CONDUIT SHALL BE 3/4"C U.O.N.
2. ALL CONDUITS SHALL BE GRS.
3. PROVIDE NYLON PULLWIRES IN ALL EMPTY CONDUITS.
4. ALL CONDUCTORS SHALL BE COPPER.
5. DEMOLITION OF EXISTING ELECTRICAL WORK SHALL INCLUDE ALL CONDUITS AND WIRING NO LONGER IN USE.
6. PROVIDE GROUND CONDUCTOR IN ALL POWER CONDUITS. GROUND CONDUCTOR SHALL BE SIZED PER THE LATEST CALIFORNIA ELECTRICAL CODE.
7. CONTRACTOR SHALL PROVIDE CONDUIT AND WIRING NECESSARY TO MAINTAIN CONTINUITY OF BRANCH CIRCUIT DUE TO DEMOLITION OF EXISTING ELECTRICAL WORK.
8. SUPPORT AND ANCHORAGE DESIGN FOR ALL RACEWAYS AND EQUIPMENT SHALL BE SUBMITTED BY THE CONTRACTOR AND SHALL MEET THE FOLLOWING REQUIREMENTS:
   - DESIGN AND CALCULATION FOR RACEWAY SUPPORTS, INCLUDING, BUT NOT LIMITED TO, ANCHORAGE AND SEISMIC BRACING OF TRAPEZES, CONDUIT HANGERS.
   - EQUIPMENT SUPPORT, ITS MEMBERS AND ANCHORAGE SHALL BE DESIGNED PER ASCE 7
   - EQUIPMENT AND PANELS ARE REQUIRED TO BE SEISMICALLY CERTIFIED PER ASCE 7
   - DESIGN AND CALCULATIONS SHALL BE SIGNED AND SEALED BY CALIFORNIA CIVIL OR STRUCTURAL ENGINEER
   - DESIGN AND CALCULATION ARE REQUIRED FOR ELECTRICAL PANELS, CABINETS, AND ENCLOSURES; AND FIRE ALARM PANELS

REV.	DATE	BY	SUB	APP.	DESCRIPTION
P	20260518				ISSUED FOR BID

DESIGNED: E. LAGUNDI
DRAWN: FWA TEAM
CHECKED: E. WONG
APPROVED: E. WONG
DATE: 20180816

REGISTERED PROFESSIONAL ENGINEER — EDWARD K.S. WONG — No. E04536 — Exp. 9-30-2026 — ELECTRICAL — STATE OF CALIFORNIA

SAN FRANCISCO BAY AREA RAPID TRANSIT DISTRICT

F. W. ASSOCIATES, INC. — SUBMITTED

PGH WONG ENGINEERING, INC. — APPROVED

COLISEUM STATION ELEVATOR MODERNIZATION

ABBREVIATIONS, SYMBOLS LEGEND AND GENERAL NOTES

CADD FILENAME: 15NL-140-E001
SIZE: D | SCALE: AS SHOWN
CONTRACT NO.: 15NL-140 | REV.: P
CONTRACT SHEET NO.: E001 | PAGE NO.: 047

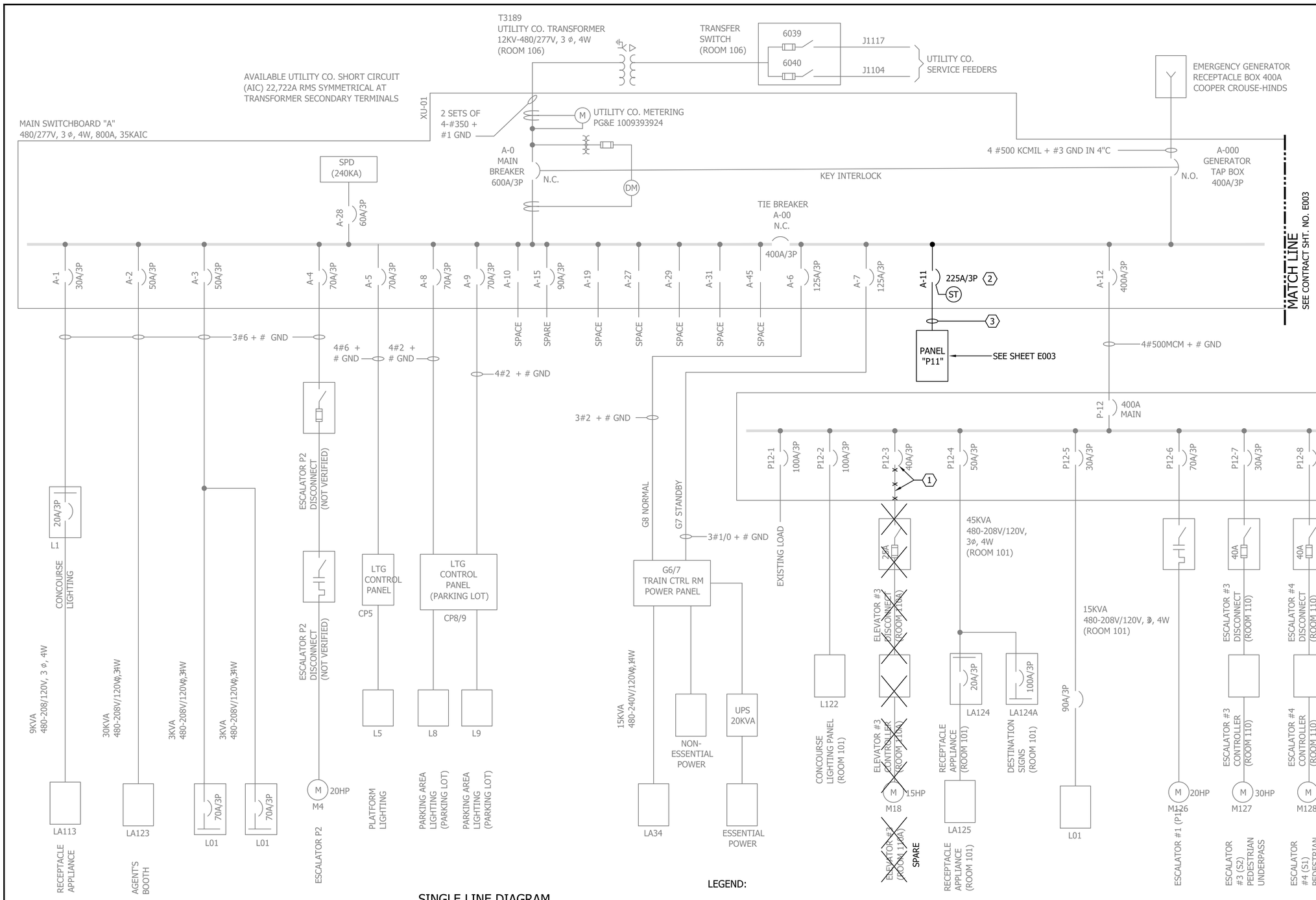

SINGLE LINE DIAGRAM

GENERAL SHEET NOTES:

1. SEE SHEET E003 FOR SINGLE LINE DIAGRAM FOR NEW PANEL "P11".

SHEET KEYNOTES:

1. DISCONNECT AND REMOVE EXISTING ELEVATOR FEEDER CONDUIT AND WIRING. COORDINATE WITH BART PRIOR TO WORK FOR REMOVAL.
2. PROVIDE (N) 225A/3P CIRCUIT BREAKER WITH BUILT-IN SHUNT TRIP DEVICE IN (E) EMPTY CIRCUIT SPACE. (N) CIRCUIT BREAKER TO MANUFACTURER TYPE AND SHORT CIRCUIT AIC OF EXISTING CIRCUIT BREAKERS ON THIS PANEL.
3. (N) 4#4/0 AWG, + 1#4 GND. IN 2 1/2" GRS.
4. (E) CIRCUIT BREAKER TO REMAIN. RE-LABEL CIRCUIT BREAKER TO "SPARE".

LEGEND:

INDICATES EXISTING CONDITION
INDICATES EXISTING TO BE REMOVED
INDICATES NEW CONDITION

REV.	DATE	BY	SUB	APP.	DESCRIPTION
P	20260518				ISSUED FOR BID

DESIGNED: E. LAGUNDI
DRAWN: FWA TEAM
CHECKED: E. WONG
APPROVED: E. WONG
DATE: 20180816

REGISTERED PROFESSIONAL ENGINEER EDWARD K.S. WONG No.10436 Exp.9-30-2026 ELECTRICAL STATE OF CALIFORNIA

SAN FRANCISCO BAY AREA RAPID TRANSIT DISTRICT

F. W. ASSOCIATES, INC. — SUBMITTED

PGH WONG ENGINEERING, INC. — APPROVED

COLISEUM STATION ELEVATOR MODERNIZATION

SINGLE LINE DIAGRAM

CADD FILENAME: 15NL-140-E002
SIZE: D | SCALE: NONE
CONTRACT NO.: 15NL-140 | REV.: P
CONTRACT SHEET NO.: E002 | PAGE NO.: 048

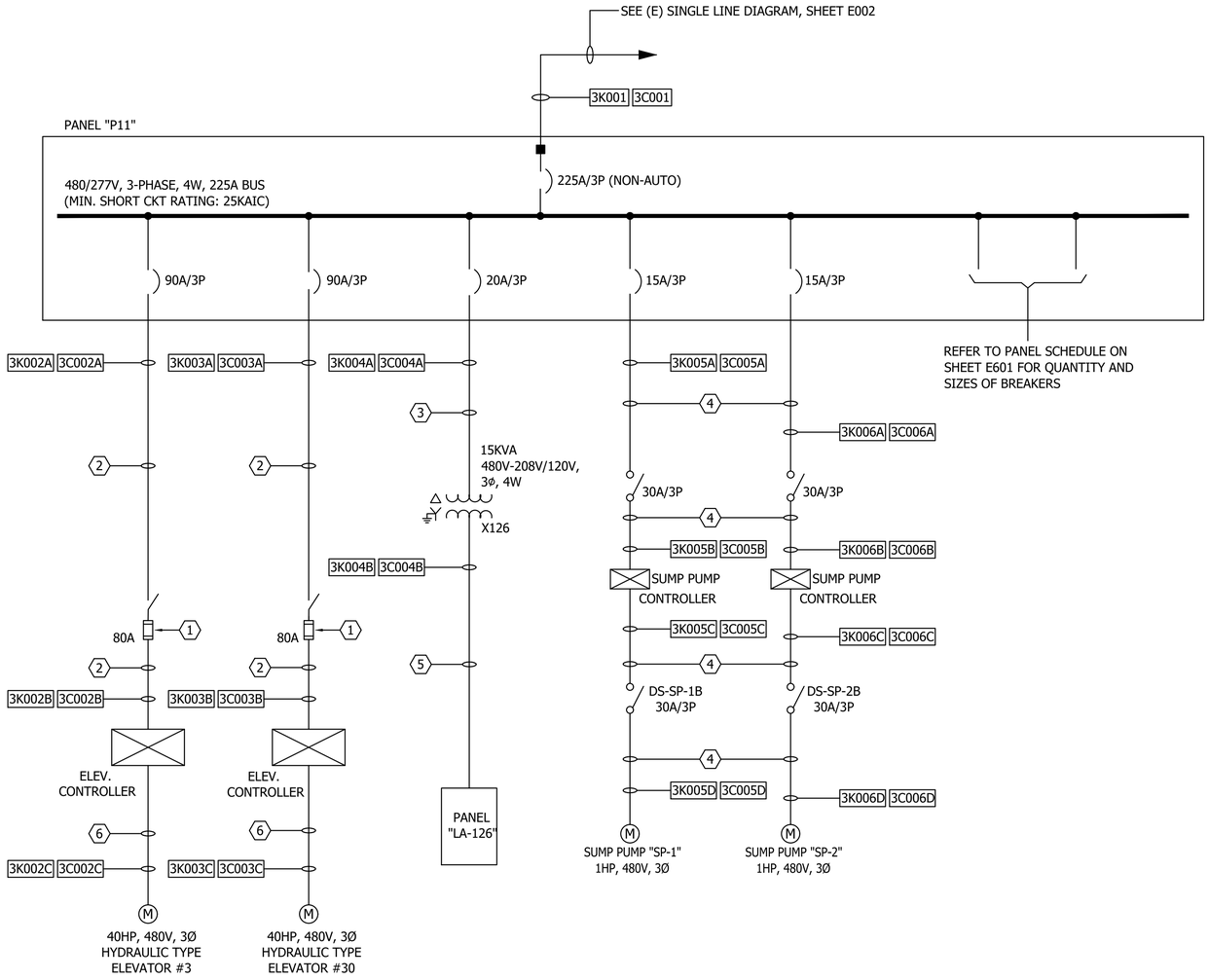

SINGLE LINE DIAGRAM

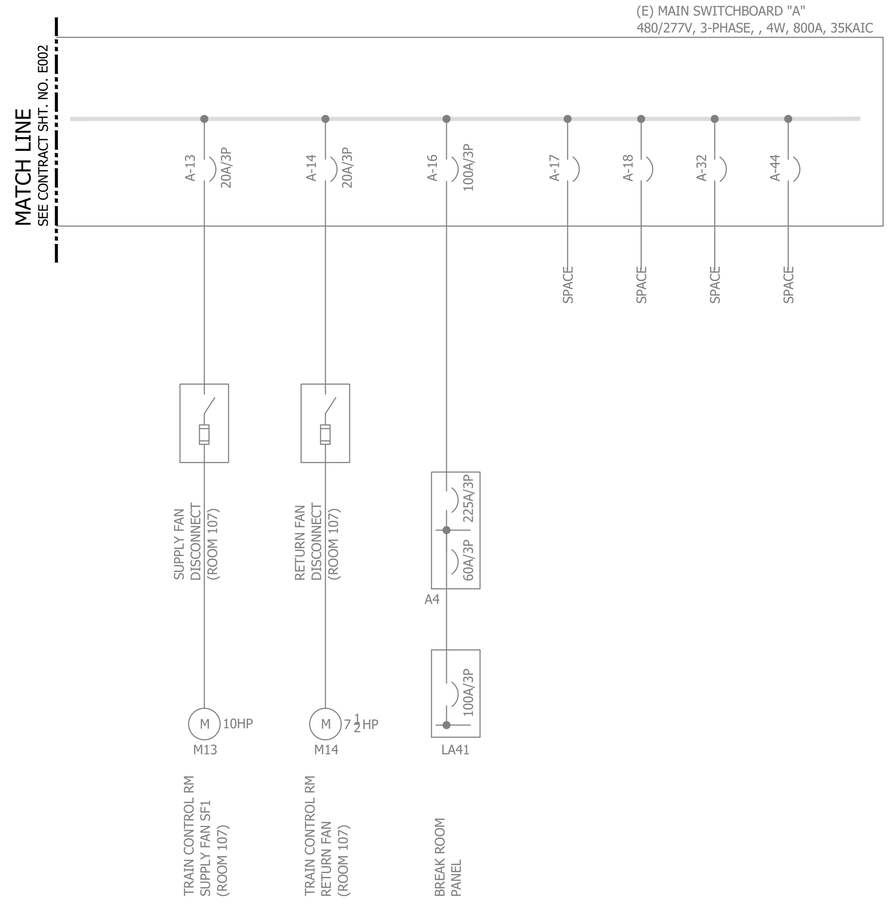

(E) SINGLE LINE DIAGRAM

LEGEND:

INDICATES EXISTING CONDITION

INDICATES NEW CONDITION

SHEET KEYNOTES:

1. PROVIDE FUSED DISCONNECT SWITCH WITH TWO BUILT-IN CONTACTS AND FUSES.
2. 3#6 + 1#8 GND. IN 1 1/4"C.
3. 3#12 + 1#8 GND. IN 1"C .
4. 3#12 + 1#12 GND. IN 3/4"C.
5. 4#6 + 1#8 GND. IN 1 1/4"C.
6. CONNECTION TO ELEVATOR MOTOR BY ELEVATOR INSTALLER.

REV.	DATE	BY	SUB	APP.	DESCRIPTION
P	20260518				ISSUED FOR BID

DESIGNED: E. LAGUNDI
DRAWN: FWA TEAM
CHECKED: E. WONG
APPROVED: E. WONG
DATE: 20180816

REGISTERED PROFESSIONAL ENGINEER EDWARD K.S. WONG No. 0A436 Exp. 9-30-2026 ELECTRICAL STATE OF CALIFORNIA

SAN FRANCISCO BAY AREA RAPID TRANSIT DISTRICT

F. W. ASSOCIATES, INC.

SUBMITTED

PGH WONG ENGINEERING, INC.

APPROVED

COLISEUM STATION ELEVATOR MODERNIZATION

SINGLE LINE DIAGRAM

CADD FILENAME: 15NL-140-E003
SIZE: D | SCALE: NONE
CONTRACT NO.: 15NL-140 | REV.: P
CONTRACT SHEET NO.: E003 | PAGE NO.: 049

CABLE SCHEDULE

CABLE NUMBER	APPLICATION	RUN			CONDUIT	CONDUCTORS						REFERENCE INSTALLATION CONTRACT SHT. NO	REMARKS
		FROM	VIA (CONDUIT DESIGNATION SERIES)	TO	SIZE AND TYPE	SIZE (AWG)	QUANTITY	INSULATION	VOLT	GRD SIZE	APPROX. LENGTH (FT)		
3C001	FEEDER	(E) MAIN SWITCHBOARD "A"	PULL BOXES EPB-1, EPB-2, EPB-3, EPB-4, EPB-5	PANEL "P11"	2 1/2" GRS	4/0	4	THWN	600	4	600	E002, E102	
3C002A	FEEDER	PANEL "P11"		ELEV. #3 FUSED DISCONNECT SWITCH	1 1/4" GRS	6	3	THWN	600	8	40	E003, E104	
3C002B	FEEDER	ELEV. #3 FUSED DISCONNECT SWITCH		ELEV. #3 CONTROLLER	1 1/4" GRS	6	3	THWN	600	8	40	E003, E104	
3C002C	FEEDER	ELEV. #3 CONTROLLER		ELEV. #3 MOTOR	1 1/4" GRS	6	3	THWN	600	8	40	E003, E104	BY ELEVATOR INSTALLER
3C003A	FEEDER	PANEL "P11"		ELEV. #30 FUSED DISCONNECT SWITCH	1 1/4" GRS	6	3	THWN	600	8	40	E003, E104	
3C003B	FEEDER	ELEV. #30 FUSED DISCONNECT SWITCH		ELEV. #30 CONTROLLER	1 1/4" GRS	6	3	THWN	600	8	40	E003, E104	
3C003C	FEEDER	ELEV. #30 CONTROLLER		ELEV. #30 MOTOR	1 1/4" GRS	6	3	THWN	600	8	40	E003, E104	BY ELEVATOR INSTALLER
3C004A	FEEDER	PANEL "P11"		XFMER "X126"	1" GRS	12	3	THWN	600	8	30	E003, E104	
3C004B	FEEDER	XFMER "X126"		PANEL "LA-126"	1 1/4" GRS	6	4	THWN	600	8	20	E003, E104	
3C005A	FEEDER	PANEL "P11"		SP-1 NON-FUSED DISCONNECT SWITCH	3/4" GRS	12	3	THWN	600	12	20	E003, E103	
3C005B	FEEDER	SP-1 NON-FUSED DISCONNECT SWITCH		SP-1 CONTROLLER	3/4" GRS	12	3	THWN	600	12	20	E003, E103	
3C005C	FEEDER	SP-1 CONTROLLER		DS-SP-1B NON-FUSED DISCONNECT SWITCH	3/4" GRS	12	3	THWN	600	12	40	E003, E103	
3C005D	FEEDER	DS-SP-1B NON-FUSED DISCONNECT SWITCH		SP-1 MOTOR	3/4" GRS	12	3	THWN	600	12	20	E003, E103	
3C006A	FEEDER	PANEL "P11"		SP-2 NON-FUSED DISCONNECT SWITCH	3/4" GRS	12	3	THWN	600	12	40	E003, E103	
3C006B	FEEDER	SP-2 NON-FUSED DISCONNECT SWITCH		SP-2 CONTROLLER	3/4" GRS	12	3	THWN	600	12	20	E003, E103	
3C006C	FEEDER	SP-2 CONTROLLER		DS-SP-2B NON-FUSED DISCONNECT SWITCH	3/4" GRS	12	3	THWN	600	12	60	E003, E103	
3C006D	FEEDER	DS-SP-2B NON-FUSED DISCONNECT SWITCH		SP-2 MOTOR	3/4" GRS	12	3	THWN	600	12	20	E003, E103	

CONDUIT SCHEDULE

CONDUIT NUMBER	SIZE (IN.)	TYPE	FROM	TO	APPROX LENGTH (FT)	REMARKS
3K001	2 1/2	GRS	(E) MAIN SWITCHBOARD "A"	PANEL "P11"	600	
3K002A	1 1/4	GRS	PANEL "P11"	ELEV. #3 FUSED DISCONNECT SWITCH	25	
3K002B	1 1/4	GRS	ELEV. #3 FUSED DISCONNECT SWITCH	ELEV. #3 CONTROLLER	25	
3K002C	1 1/4	GRS	ELEV. #3 CONTROLLER	ELEV. #3 MOTOR	15	CONDUIT ROUTING BY ELEVATOR INSTALLER
3K003A	1 1/4	GRS	PANEL "P11"	ELEV. #30 FUSED DISCONNECT SWITCH	25	
3K003B	1 1/4	GRS	ELEV. #30 FUSED DISCONNECT SWITCH	ELEV. #30 CONTROLLER	25	
3K003C	1 1/4	GRS	ELEV. #30 CONTROLLER	ELEV. #30 MOTOR	15	CONDUIT ROUTING BY ELEVATOR INSTALLER
3K004A	1	GRS	PANEL "P11"	XFMER "X126"	15	
3K004B	1 1/4	GRS	XFMER "X126"	PANEL "LA126"	10	
3K005A	3/4	GRS	PANEL "P11"	SP-1 NON-FUSED DISCONNECT SWITCH	10	
3K005B	3/4	GRS	SP-1 NON-FUSED DISCONNECT SWITCH	SP-1 CONTROLLER	10	
3K005C	3/4	GRS	SP-1 CONTROLLER	DS-SP-1B NON-FUSED DISCONNECT SWITCH	25	
3K005D	3/4	GRS	DS-SP-1B NON-FUSED DISCONNECT SWITCH	SP-1 MOTOR	10	
3K006A	3/4	GRS	PANEL "P11"	SP-2 NON-FUSED DISCONNECT SWITCH	25	
3K006B	3/4	GRS	SP-2 NON-FUSED DISCONNECT SWITCH	SP-2 CONTROLLER	10	
3K006C	3/4	GRS	SP-2 CONTROLLER	DS-SP-2B NON-FUSED DISCONNECT SWITCH	50	
3K006D	3/4	GRS	DS-SP-2B NON-FUSED DISCONNECT SWITCH	SP-2 MOTOR	10	

REV.	DATE	BY	SUB	APP.	DESCRIPTION
P	20260518				ISSUED FOR BID

DESIGNED: E. LAGUNDI
DRAWN: FWA TEAM
CHECKED: E. WONG
APPROVED: E. WONG
DATE: 20180816

REGISTERED PROFESSIONAL ENGINEER — EDWARD K.S. WONG — No.10436 — Exp.9-30-2028 — ELECTRICAL — STATE OF CALIFORNIA

SAN FRANCISCO BAY AREA RAPID TRANSIT DISTRICT

F. W. ASSOCIATES, INC.
SUBMITTED

PGH WONG ENGINEERING, INC.
APPROVED

COLISEUM STATION ELEVATOR MODERNIZATION

CABLE & CONDUIT SCHEDULE

CADD FILENAME: 15NL-140-E004
SIZE: D | SCALE: NONE
CONTRACT NO.: 15NL-140 | REV.: P
CONTRACT SHEET NO.: E004 | PAGE NO.: 050

CIRCUIT SCHEDULE

CIRCUIT NUMBER	APPLICATION	RUN			CONDUIT	CONDUCTORS					REMARKS
		FROM	VIA (CONDUIT DESIGNATION SERIES)	TO	SIZE AND TYPE	SIZE (AWG) / TYPE	QTY	VOLT	GRD SIZE	APPROXIMATE LENGTH (FT)	
3C011	BRANCH CIRCUIT	PANEL "LA126"	3K011	FIRE ALARM CONTROL PANEL	3/4" GRS	12/THWN	2	600	12	40	
3C012	BRANCH CIRCUIT	PANEL "LA126"	3K012 VIA 30A/2P DISCONNECT SWITCH	ELEV. #3 CAB LT	3/4" GRS	12/THWN	4	600	12	50	
3C013	BRANCH CIRCUIT	PANEL "LA126"	3K012 VIA 30A/2P DISCONNECT SWITCH	ELEV. #30 CAB LT							
3C014	BRANCH CIRCUIT	PANEL "LA126"	3K014	FSD	3/4" GRS	12/THWN	2	600	12	60	
3C015	BRANCH CIRCUIT	PANEL "LA126"	3K015	ELEV. MACH. ROOM RECEPT.	3/4" GRS	12/THWN	4	600	12	70	
3C016	BRANCH CIRCUIT	PANEL "LA126"		ELECT. ROOM RECEPT.							
3C017	BRANCH CIRCUIT	PANEL "LA126"	3K017	ELEV. #3 SCADA INTERFACE CABINET	3/4" GRS	12/THWN	2	600	12	50	
3C017A	BRANCH CIRCUIT	DIN RAIL MOUNTED 20A/1P CIRCUIT BREAKER	3K017A AT ELEV. #3 SCADA INTERFACE CABINET	6" x 6" x 6" JUNCTION BOX	3/4" GRS	12/THWN	2	600	12	3	
3C017B	BRANCH CIRCUIT	6" x 6" x 6" JUNCTION BOX	3K017B AT ELEV. #3 SCADA INTERFACE CABINET	DUPLEX RECEPTACLE OUTLET	3/4" GRS	12/THWN	2	600	12	3	
3C017C	BRANCH CIRCUIT	6" x 6" x 6" JUNCTION BOX	3K017C AT ELEV. #3 SCADA INTERFACE CABINET	REMOTE I/O	3/4" GRS	12/THWN	2	600	12	3	
3C018	BRANCH CIRCUIT	PANEL "LA126"	3K018	ELEV. #30 SCADA INTERFACE CABINET	3/4" GRS	12/THWN	2	600	12	40	
3C018A	BRANCH CIRCUIT	DIN RAIL MOUNTED 20A/1P CIRCUIT BREAKER	3K018A AT ELEV. #30 SCADA INTERFACE CABINET	6" x 6" x 6" JUNCTION BOX	3/4" GRS	12/THWN	2	600	12	3	
3C018B	BRANCH CIRCUIT	6" x 6" x 6" JUNCTION BOX	3K018B AT ELEV. #30 SCADA INTERFACE CABINET	DUPLEX RECEPTACLE OUTLET	3/4" GRS	12/THWN	2	600	12	3	
3C018C	BRANCH CIRCUIT	6" x 6" x 6" JUNCTION BOX	3K018C AT ELEV. #30 SCADA INTERFACE CABINET	REMOTE I/O	3/4" GRS	12/THWN	2	600	12	3	
3C019	BRANCH CIRCUIT	PANEL "LA126"	3K019	FIELD COMMUNICATION CABINET	3/4" GRS	12/THWN	2	600	12	30	
3C020	BRANCH CIRCUIT	PANEL "LA126"	3K020 VIA MANUAL STARTER	CONDENSATE PUMP	3/4" GRS	12/THWN	2	600	12	30	
3C021	BRANCH CIRCUIT	PANEL "LA126"	3K021	ELEV. #3 PIT LT	3/4" GRS	12/THWN	2	600	12	70	
3C022	BRANCH CIRCUIT	PANEL "LA126"	3K021	ELEV. #3 PIT RECEPTACLE	3/4" GRS	12/THWN	2	600	12	70	
3C023	BRANCH CIRCUIT	PANEL "LA126"	3K023 VIA 30A/2P FUSED DISCONNECT SWITCH	ACU-1	3/4" GRS	12/THWN	2	600	12	40	
3C024	BRANCH CIRCUIT	PANEL "LA126"	3K024 VIA 30A/2P FUSED DISCONNECT SWITCH	CU-1	3/4" GRS	10/THWN	2	600	12	20	
3C025	BRANCH CIRCUIT	PANEL "LA126"	3K025 VIA 30A/2P FUSED DISCONNECT SWITCH	ELEVATOR #3 A/C UNIT	3/4" GRS	12/THWN	4	600	12	40	
3C026	BRANCH CIRCUIT	PANEL "LA126"	3K025 VIA 30A/2P FUSED DISCONNECT SWITCH	ELEVATOR #30 A/C UNIT							
3C027	BRANCH CIRCUIT	PANEL "LA126"	3K026	ELEV. #30 PIT LT	3/4" GRS	10/THWN	2	600	12	140	
3C028	BRANCH CIRCUIT	PANEL "LA126"	3K026	ELEV. #30 PIT RECEPTACLE	3/4" GRS	10/THWN	2	600	12	140	

CONDUIT SCHEDULE

CONDUIT NUMBER	SIZE (IN.)	TYPE	FROM	TO	APPROX LENGTH(FT)	REMARKS
3K011	3/4"	GRS	PANEL "LA126"	FIRE ALARM CONTROL PANEL	30	
3K012	3/4	GRS	PANEL "LA126"	ELEV. #3 CAB LT & ELEV. #30 CAB LT	40	
3K014	3/4	GRS	PANEL "LA126"	FSD	50	
3K015	3/4	GRS	PANEL "LA126"	ELEV. MACH. ROOM RECEPTACLE	60	
				ELEV. ROOM RECEPTACLE		
3K017	3/4	GRS	PANEL "LA126"	ELEV. #3 SCADA INTERFACE CABINET	40	
3K017A	3/4	GRS	DIN RAIL MOUNTED 20A/1P CIRCUIT BREAKER	6" x 6" x 6" JUNCTION BOX	1	
3K017B	3/4	GRS	6" x 6" x 6" JUNCTION BOX	DUPLEX RECEPTACLE OUTLET	1	
3K017C	3/4	GRS	6" x 6" x 6" JUNCTION BOX	REMOTE I/O	1	
3K018C	3/4	GRS	DIN RAIL MOUNTED 20A/1P CIRCUIT BREAKER	6" x 6" x 6" JUNCTION BOX	1	
3K018B	3/4	GRS	6" x 6" x 6" JUNCTION BOX	DUPLEX RECEPTACLE OUTLET	1	
3K018C	3/4	GRS	6" x 6" x 6" JUNCTION BOX	REMOTE I/O	1	
3K019	3/4	GRS	PANEL "LA126"	FIELD COMMUNICATION CABINET	20	
3K020	3/4	GRS	PANEL "LA126"	CONDENSATE PUMP	20	
3K021	3/4	GRS	PANEL "LA126"	ELEV. #3 PIT LT & ELEV. #3 PIT RECEPTACLE	60	
3K023	3/4	GRS	PANEL "LA126"	ACU-1	30	
3K024	3/4	GRS	PANEL "LA126"	CU-1	20	
3K025	3/4	GRS	PANEL "LA126"	ELEV. #3 & ELEV. #30 A/C UNIT	30	
3K026	3/4	GRS	PANEL "LA126"	ELEV. #30 PIT LT & ELEV. #30 PIT RECEPT.	140	

REV.	DATE	BY	SUB	APP.	DESCRIPTION
P	20260518				ISSUED FOR BID

DESIGNED: E. LAGUNDI
DRAWN: FWA TEAM
CHECKED: E. WONG
APPROVED: E. WONG
DATE: 20180816

REGISTERED PROFESSIONAL ENGINEER — EDWARD K.S. WONG — No.10436 — Exp.9-30-2026 — ELECTRICAL — STATE OF CALIFORNIA

SAN FRANCISCO BAY AREA RAPID TRANSIT DISTRICT

F. W. ASSOCIATES, INC. — SUBMITTED

PGH WONG ENGINEERING, INC. — APPROVED

COLISEUM STATION ELEVATOR MODERNIZATION

CONDUIT AND CIRCUIT SCHEDULE

CADD FILENAME: 15NL-140-E005
SIZE: D | SCALE: NONE
CONTRACT NO.: 15NL-140 | REV.: P
CONTRACT SHEET NO.: E005 | PAGE NO.: 051

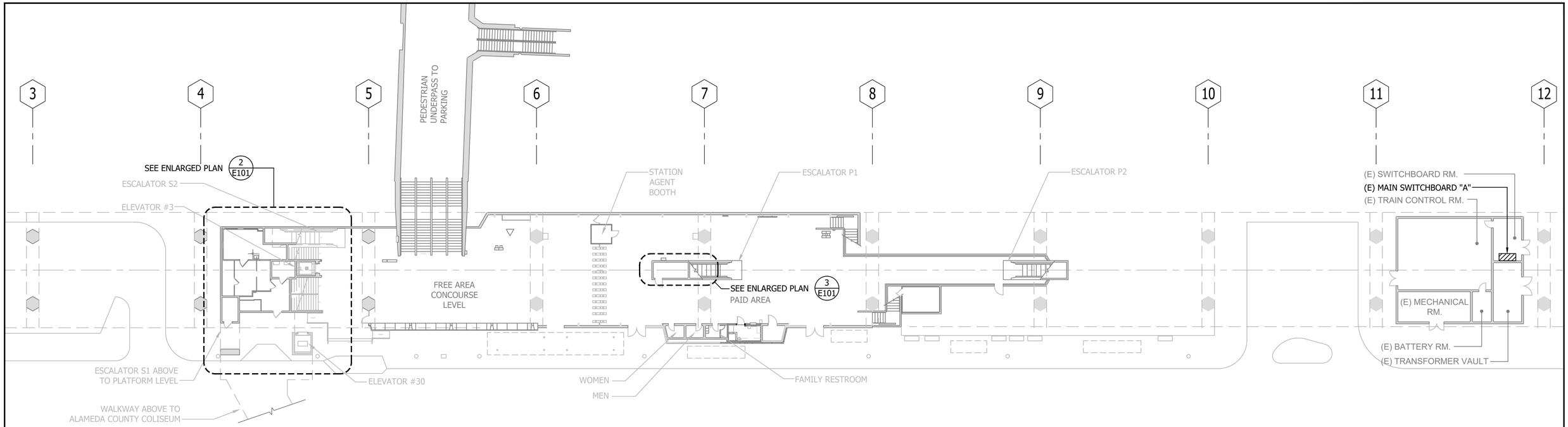

CONCOURSE LEVEL ELECTRICAL DEMOLITION PLAN

SCALE: 1 = 20'-0"

1 / E101

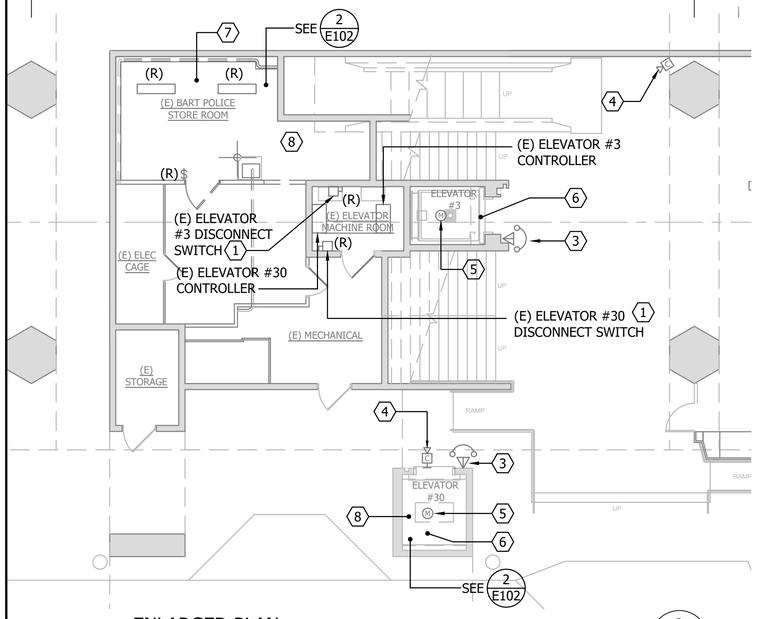

ENLARGED PLAN

SCALE: 1/8" = 1'-0"

2 / E101

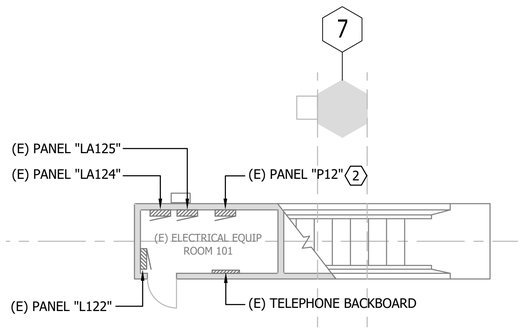

ENLARGED PLAN

SCALE: 1/8" = 1'-0"

3 / E101

LEGEND:

INDICATES EXISTING CONDITION

INDICATES NEW CONDITION

GENERAL SHEET NOTES:

1. SEE SHEET E102 AND E103 FOR NEW ELECTRICAL WORK.
2. WHERE CONDUIT PENETRATIONS THROUGH WALLS ARE REMOVED FOR DEMOLITION, PATCH AND REPAIR WALLS TO MATCH EXISTING WALL FINISH.

SHEET KEYNOTES:

1. DISCONNECT AND REMOVE (E) ELEVATOR DISCONNECT SWITCH BRANCH CIRCUIT AND ALL ASSOCIATED CONDUIT AND WIRING BACK TO SOURCE. ABANDON (E) CONDUITS WHERE EMBEDDED IN CONCRETE.
2. DISCONNECT AND REMOVE (E) ELEVATOR BRANCH CIRCUITS AND LABEL (E) CIRCUIT BREAKERS AS SPARE. SEE SHEET E002 FOR (E) CIRCUITS BEING REMOVED.
3. REMOVE (E) CONDUIT AND TELEPHONE CABLING AT (E) COURTESY PHONE AT ELEVATOR LANDING, BACK TO SOURCE, TYPICAL OF (4) AT CONCOURSE, WALKWAY, AND PLATFORM LANDINGS. ABANDON (E) CONDUITS WHERE EMBEDDED IN CONCRETE. TRACE EXISTING RACEWAY IN FIELD. THE (E) COURTESY PHONES SHALL REMAIN. REPLACE (E) TELEPHONE CABLING WITH CATEGORY 6 CABLES. SEE SHEET T101, T602, AND T603 FOR NEW WORK.
4. REMOVE (E) CCTV ANALOG CAMERA AND ALL ASSOCIATED CONDUIT AND CABLING ON THE EXTERIOR OF THE ELEVATOR ENTRANCE. REPLACE WITH DIGITAL IP CAMERAS. SEE SHEET T101 AND T605 FOR NEW WORK.
5. DISCONNECT AND REMOVE (E) SUMP PUMP MOTOR AND ALL ASSOCIATED CONDUIT AND WIRING. ABANDON (E) CONDUITS WHERE EMBEDDED IN CONCRETE.
6. REMOVE (E) LIGHT FIXTURES AND LIGHT SWITCH IN ELEVATOR PIT AND REPLACE WITH NEW. SEE SHEET E102 FOR NEW WORK.
7. REMOVE (E) LIGHT FIXTURES AND LIGHT SWITCH IN THIS ROOM AND REPLACE WITH NEW. SEE SHEET E102 FOR NEW WORK.
8. SEE GENERAL NOTE 1.

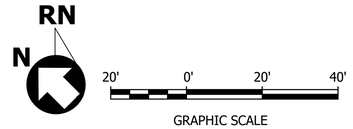

GRAPHIC SCALE

REV.	DATE	BY	SUB	APP.	DESCRIPTION
P	20260518				ISSUED FOR BID

DESIGNED: E. LAGUNDI
DRAWN: FWA TEAM
CHECKED: E. WONG
APPROVED: E. WONG
DATE: 20180816

REGISTERED PROFESSIONAL ENGINEER — EDWARD K.S. WONG — No. 19743 — Exp. 9-30-2026 — ELECTRICAL — STATE OF CALIFORNIA

SAN FRANCISCO BAY AREA RAPID TRANSIT DISTRICT

F. W. ASSOCIATES, INC.

SUBMITTED

PGH WONG ENGINEERING, INC.

APPROVED

COLISEUM STATION ELEVATOR MODERNIZATION

DEMOLITION PLANS

CADD FILENAME: 15NL-140-E101
SIZE: D
SCALE: AS SHOWN
CONTRACT NO.: 15NL-140
REV.: P
CONTRACT SHEET NO.: E101
PAGE NO.: 052

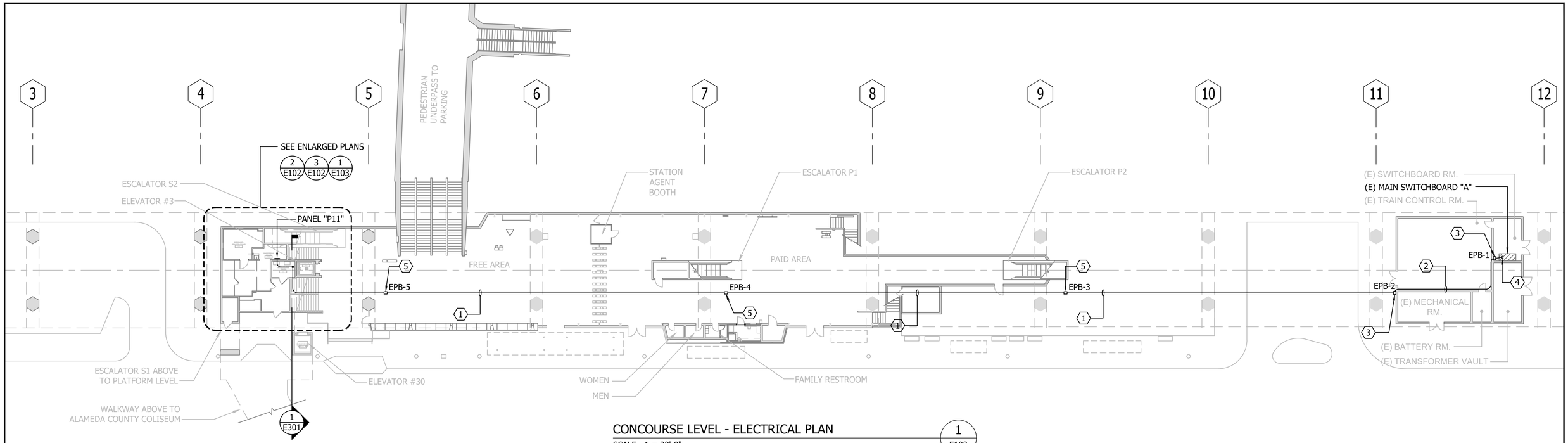

CONCOURSE LEVEL - ELECTRICAL PLAN

SCALE: 1 = 20'-0"

1 / E102

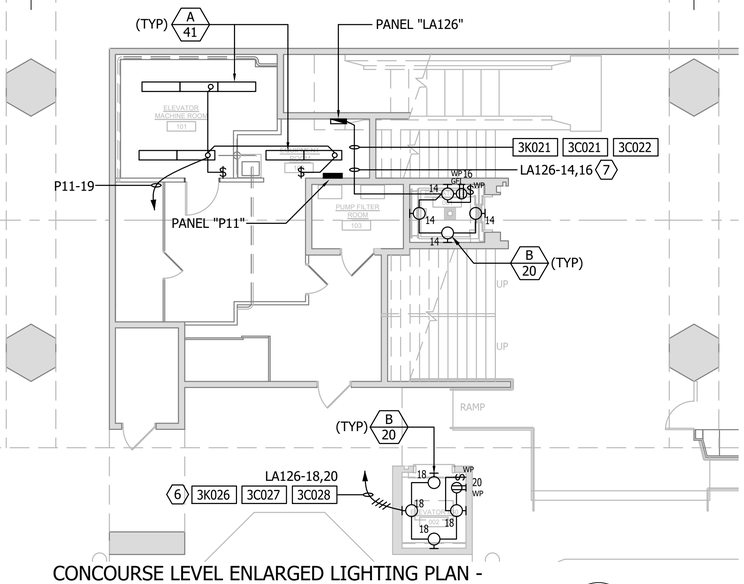

CONCOURSE LEVEL ENLARGED LIGHTING PLAN - ELEVATOR MACHINE ROOM AND ELECTRICAL ROOMS

SCALE: 1/8" = 1'-0"

2 / E102 E101

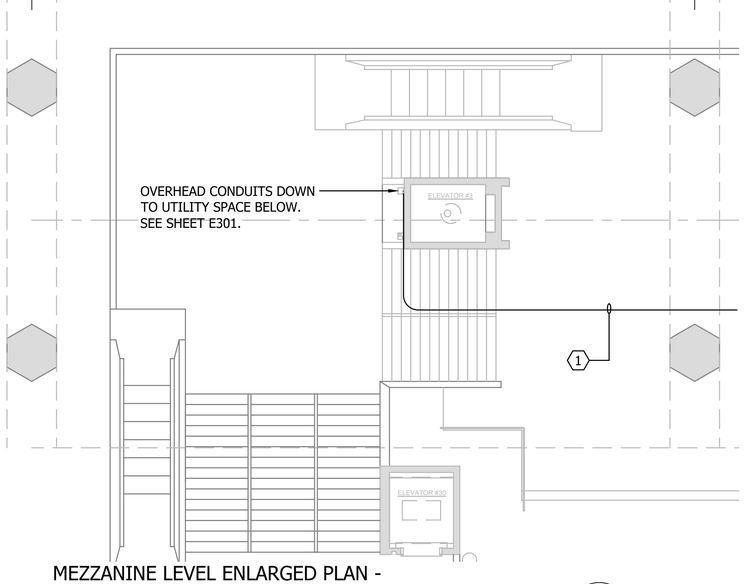

MEZZANINE LEVEL ENLARGED PLAN - REFERENCE ONLY

SCALE: 1/8" = 1'-0"

3 / E102 E101

LEGEND:

INDICATES EXISTING CONDITION
INDICATES NEW CONDITION

SHEET KEYNOTES:

1. MOUNT (1) 2 1/2"C ON UNDERSIDE OF (E) OVERHEAD PLATFORM STRUCTURE. CONDUIT SHALL RUN OVERHEAD ABOVE EXISTING STRUCTURES AT THE GROUND/CONCOURSE LEVEL.
2. WALL MOUNT (1)-2 1/2"C, 6" BELOW (E) CEILING.
3. WALL MOUNTED 20"L x 16"W x 8"D NEMA 4X STAINLESS STEEL PULLBOX WITH COVER. MOUNT PULLBOX, 6" BELOW (E) CEILING.
4. INSTALL 225A, CIRCUIT BREAKER TO (E) SPACE "A-11". SEE NOTE NUMBER 2, SHEET E002.
5. MOUNT 20"L x 16"W x 8"D NEMA 4X STAINLESS STEEL PULLBOX WITH COVER ON UNDERSIDE OF (E) BEAM OR STRUCTURE.
6. CONDUIT PENETRATION FROM (E) ELEVATOR #30 HOISTWAY TO UNDERSIDE OF (E) STAIRS. HOMERUN TO PANEL AS INDICATED.
7. 4#12 + 1#12 GND. IN 3/4"C.

RN
N

20' 0' 20' 40'

GRAPHIC SCALE

REV.	DATE	BY	SUB	APP.	DESCRIPTION
P	20260518				ISSUED FOR BID

DESIGNED: E. LAGUNDI
DRAWN: FWA TEAM
CHECKED: E. WONG
APPROVED: E. WONG
DATE: 20180816

REGISTERED PROFESSIONAL ENGINEER EDWARD K.S. WONG No. 10436 Exp. 9-30-2026 ELECTRICAL STATE OF CALIFORNIA

SAN FRANCISCO BAY AREA RAPID TRANSIT DISTRICT

F. W. ASSOCIATES, INC. — SUBMITTED

PGH WONG ENGINEERING, INC. — APPROVED

COLISEUM STATION ELEVATOR MODERNIZATION

CONCOURSE LEVEL - ELECTRICAL PLAN AND ENLARGED LIGHTING PLAN

CADD FILENAME: 15NL-140-E102
SIZE: D
SCALE: AS SHOWN
CONTRACT NO.: 15NL-140
REV.: P
CONTRACT SHEET NO.: E102
PAGE NO.: 053

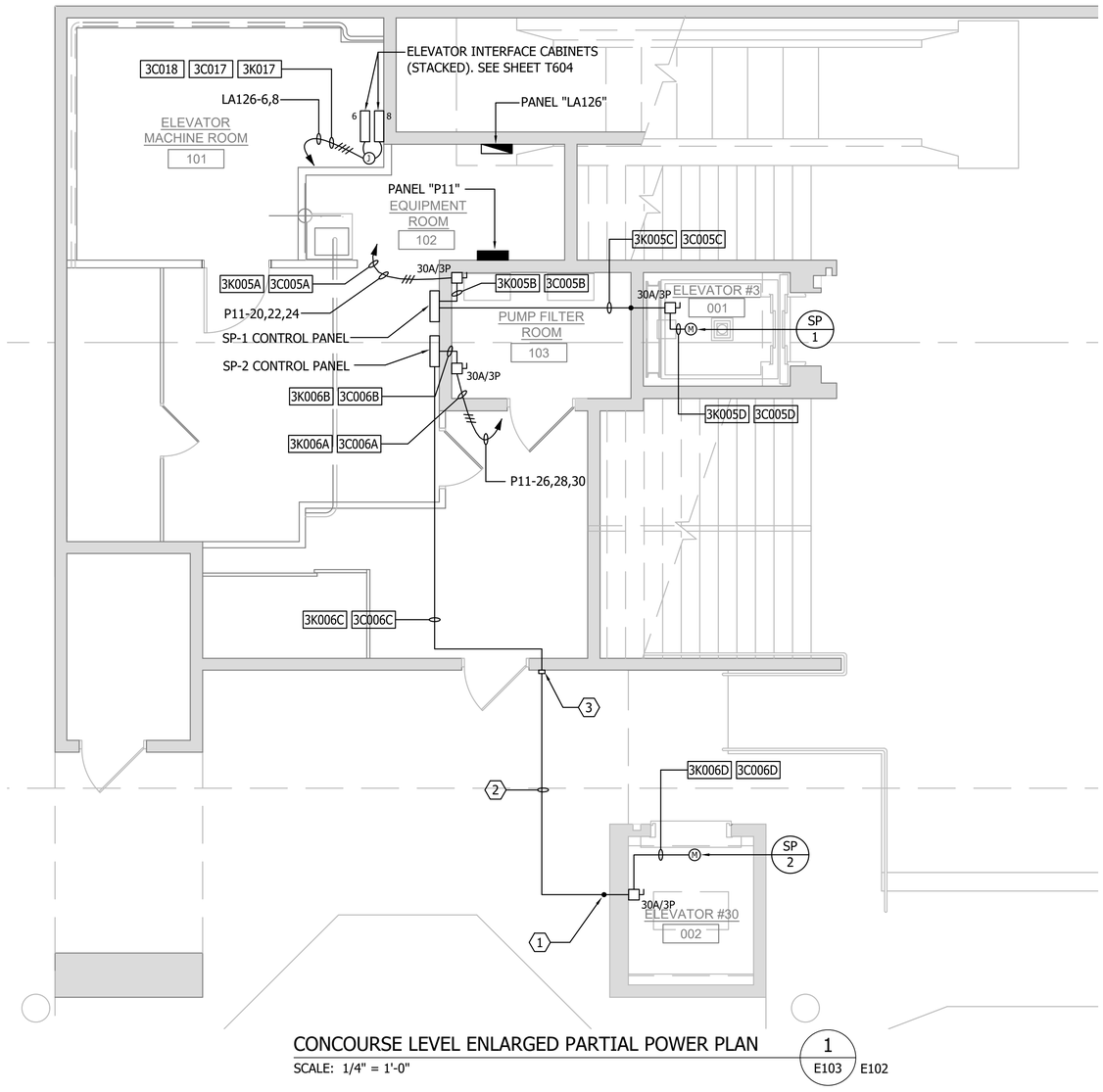

CONCOURSE LEVEL ENLARGED PARTIAL POWER PLAN

SCALE: 1/4" = 1'-0"

1 / E103 E102

SHEET KEYNOTES:

1. CONDUIT, ROUTED THRU SHAFT WALL AS HIGH AS POSSIBLE.
2. CONDUIT INSTALLED EXPOSED ON THE UNDERSIDE OF THE (E) PEDESTRIAN RAMP STAIR STRUCTURE SPANNING OVER THE GROUND ELEVATION OF THE CONCOURSE LEVEL, CONNECTING TO THE PEDESTRIAN BRIDGE AND NEARBY MEZZANINE LEVEL OF THE CONCOURSE.
3. CONDUIT PENETRATED THRU WALL AS HIGH AS POSSIBLE WITH 4" SQUARE GALVANIZED STEEL JUNCTION BOX.

RN

N

4' 0' 4' 8'

GRAPHIC SCALE

REV.	DATE	BY	SUB	APP.	DESCRIPTION
P	20260518				ISSUED FOR BID

DESIGNED: E. LAGUNDI
DRAWN: FWA TEAM
CHECKED: E. WONG
APPROVED: E. WONG
DATE: 20180816

REGISTERED PROFESSIONAL ENGINEER EDWARD K.S. WONG No. 104367 Exp. 9-30-2026 ELECTRICAL - STATE OF CALIFORNIA -

SAN FRANCISCO BAY AREA RAPID TRANSIT DISTRICT

F. W. ASSOCIATES, INC.

SUBMITTED

PGH WONG ENGINEERING, INC.

APPROVED

COLISEUM STATION ELEVATOR MODERNIZATION

ENLARGED PARTIAL POWER PLAN

CADD FILENAME: 15NL-140-E103
SIZE: D
SCALE: 1/4" = 1'-0"
CONTRACT NO.: 15NL-140
REV.: P
CONTRACT SHEET NO.: E103
PAGE NO.: 054

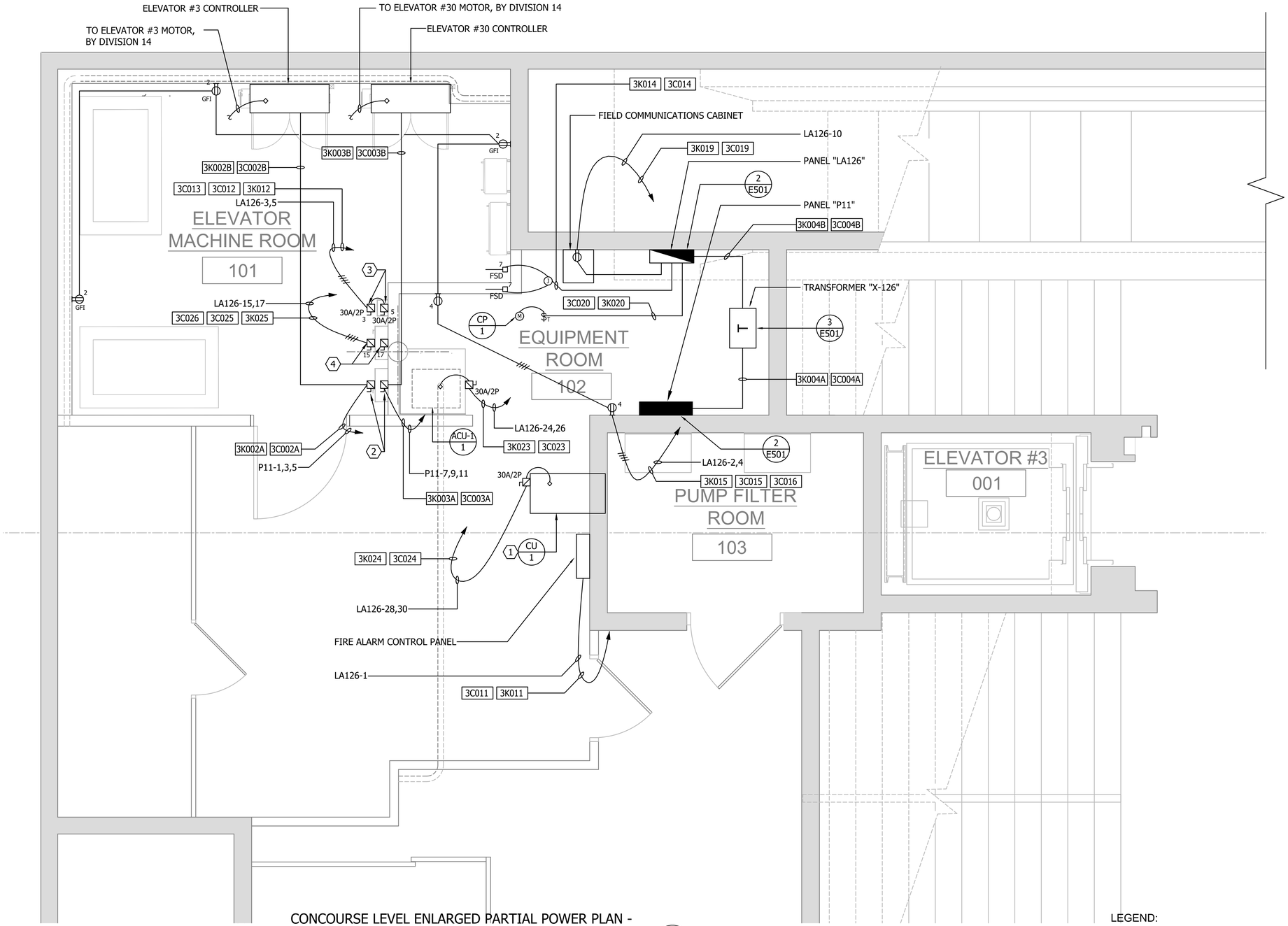

CONCOURSE LEVEL ENLARGED PARTIAL POWER PLAN - ELEVATOR EQUIPMENT POWER

SCALE: 1/2" = 1'-0"

1 / E104

GENERAL SHEET NOTES:

1. SEE VERTICAL TRANSPORTATION SHEETS FOR LOCATION AND LAYOUT OF ELEVATOR EQUIPMENT.

SHEET KEYNOTES:

1. CONDENSING UNIT, MOUNTED BELOW PLATFORM STRUCTURE REFER TO MECHANICAL DRAWING SHEET M401, FOR EXACT LOCATION.
2. (STACKED) ELEVATOR #3 AND #30 POWER FUSED DISCONNECT SWITCHES.
3. (STACKED) ELEVATOR #3 AND #30 CAB LIGHT FUSED DISCONNECT SWITCHES, 30A/2P, TYP.
4. (STACKED) ELEVATOR #3 AND #30 A/C UNIT FUSED DISCONNECT SWITCHES, 30A/2P, TYP.

LEGEND:

INDICATES EXISTING CONDITION
INDICATES NEW CONDITION

RN

4' 0' 4' 8'

GRAPHIC SCALE

REV.	DATE	BY	SUB	APP.	DESCRIPTION
P	20260518				ISSUED FOR BID

DESIGNED: E. LAGUNDI
DRAWN: FWA TEAM
CHECKED: E. WONG
APPROVED: E. WONG
DATE: 20180816

REGISTERED PROFESSIONAL ENGINEER EDWARD K.S. WONG No.10436 Exp.9-30-2026 ELECTRICAL STATE OF CALIFORNIA

SAN FRANCISCO BAY AREA RAPID TRANSIT DISTRICT

F. W. ASSOCIATES, INC.
SUBMITTED

PGH WONG ENGINEERING, INC.
APPROVED

COLISEUM STATION ELEVATOR MODERNIZATION

ENLARGED PARTIAL POWER PLAN

CADD FILENAME: 15NL-140-E104
SIZE: D
SCALE: 1/2" = 1'-0"
CONTRACT NO.: 15NL-140
REV.: P
CONTRACT SHEET NO.: E104
PAGE NO.: 055

GENERAL SHEET NOTES:

1. SEE MECHANICAL AND PLUMBING DRAWINGS FOR LOCATIONS OF NEW PIPING, AND COORDINATE IN FIELD FOR INSTALLATION OF CONDUIT.
2. SEE ARCHITECTURAL DRAWINGS FOR ADDITIONAL DETAILS AND REQUIREMENTS FOR PENETRATIONS AT BACK OF ELEVATOR #3 SHAFT.
3. PROVIDE CONDUIT HANGERS, STRAPS, CLAMPS, CHANNELS, TRAPEZE, AND OTHER SUPPORTS AS NEEDED TO ACCOMMODATE EXISTING FIELD CONDITIONS.
4. REFER TO SHEETS T101, T102, AND T103 FOR FIRE ALARM AND COMMUNICATIONS CONDUIT ROUTING.

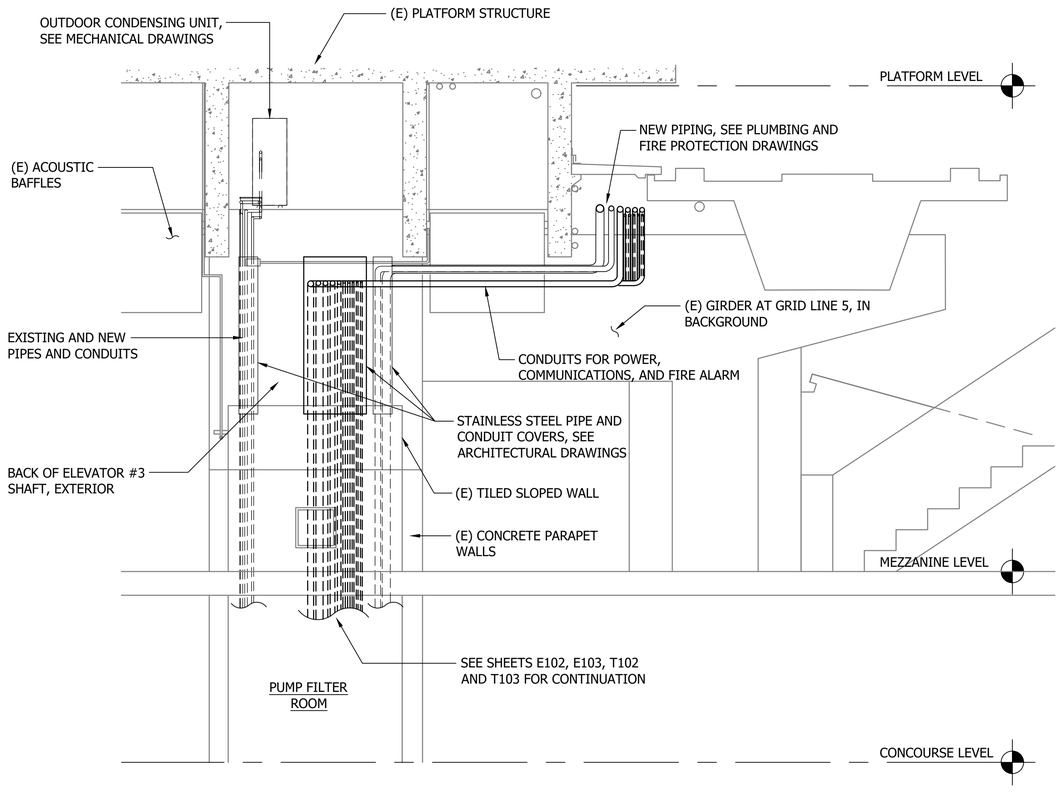

CROSS SECTION AT BACK OF ELEVATOR #3 SHAFT

SCALE: 3/8" = 1'-0"

1 / E301

E102
T101

REV.	DATE	BY	SUB	APP.	DESCRIPTION
P	20260518				ISSUED FOR BID

DESIGNED: E. LAGUNDI
DRAWN: FWA TEAM
CHECKED: E. WONG
APPROVED: E. WONG
DATE: 20180816

REGISTERED PROFESSIONAL ENGINEER — EDWARD K.S. WONG — No. 10436 — Exp. 9-30-2026 — ELECTRICAL — STATE OF CALIFORNIA

SAN FRANCISCO BAY AREA RAPID TRANSIT DISTRICT

F. W. ASSOCIATES, INC. — SUBMITTED

PGH WONG ENGINEERING, INC. — APPROVED

COLISEUM STATION ELEVATOR MODERNIZATION

CROSS SECTION AT ELEVATOR #3 SHAFT

CADD FILENAME: 15NL-140-E301
SIZE: D | SCALE: 3/8" = 1'-0"
CONTRACT NO.: 15NL-140 | REV.: P
CONTRACT SHEET NO.: E301 | PAGE NO.: 056

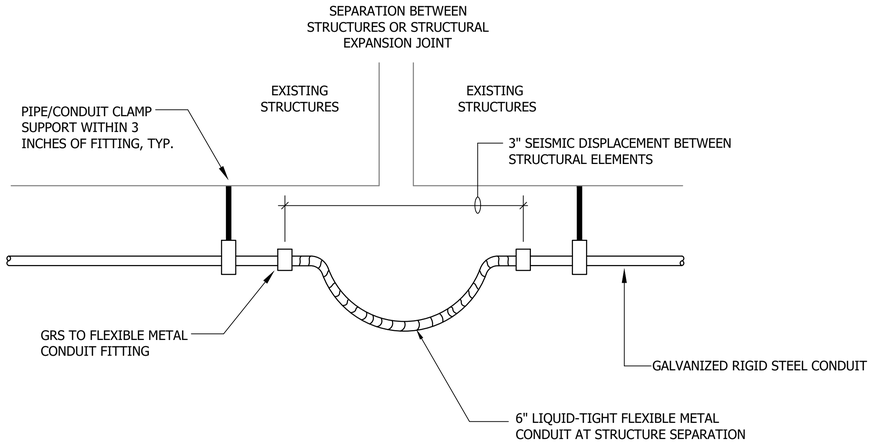

CONDUIT DETAIL FOR SEISMIC DISPLACEMENT — 1 / E501

SCALE: N.T.S

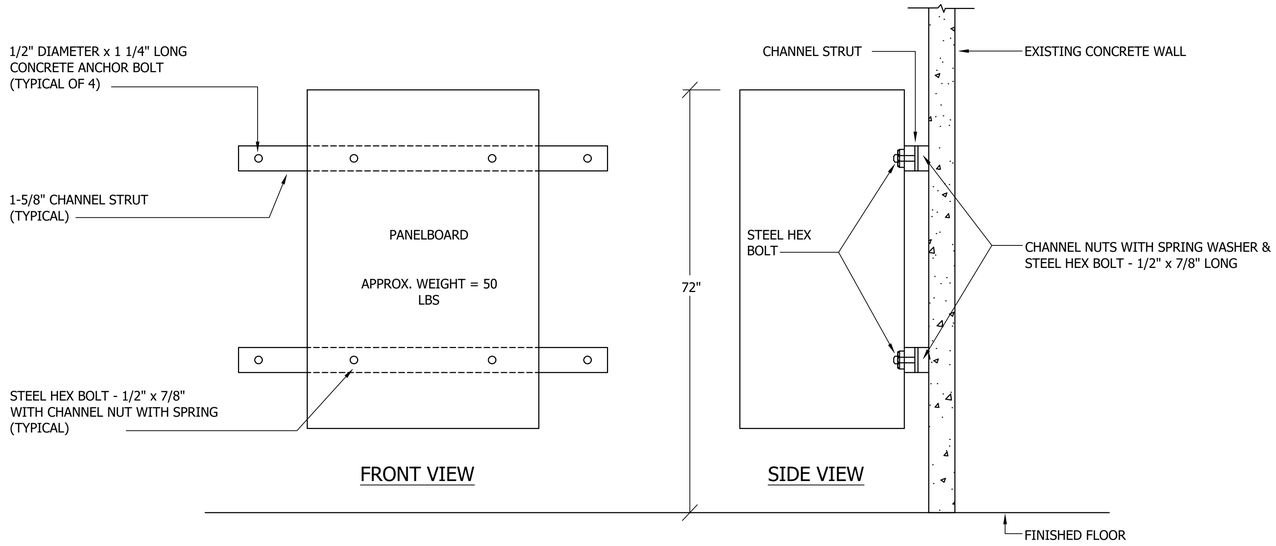

PANELBOARD MOUNTING DETAIL — 2 / E501

SCALE: N.T.S (SURFACE WALL MOUNTED)

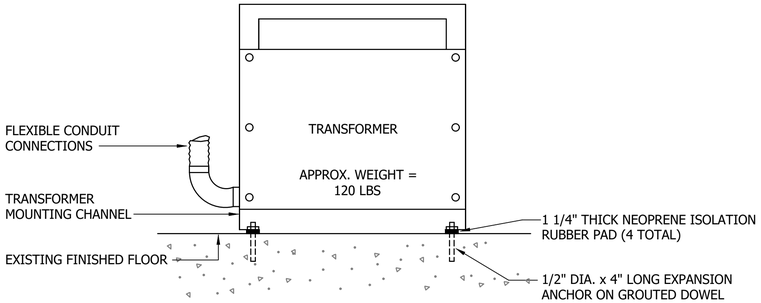

TRANSFORMER MOUNTING DETAIL — 3 / E501

SCALE: N.T.S

REV.	DATE	BY	SUB	APP.	DESCRIPTION
P	20260518				ISSUED FOR BID

DESIGNED: E. LAGUNDI
DRAWN: FWA TEAM
CHECKED: E. WONG
APPROVED: E. WONG
DATE: 20180816

EDWARD K.S. WONG — No. 104535 — Exp. 9-30-2026 — REGISTERED PROFESSIONAL ENGINEER — ELECTRICAL — STATE OF CALIFORNIA

SAN FRANCISCO BAY AREA RAPID TRANSIT DISTRICT

F. W. ASSOCIATES, INC. — SUBMITTED

PGH WONG ENGINEERING, INC. — APPROVED

COLISEUM STATION ELEVATOR MODERNIZATION

DETAILS

CADD FILENAME: 15NL-140-E301
SIZE: D | SCALE: N.T.S
CONTRACT NO.: 15NL-140 | REV.: P
CONTRACT SHEET NO.: E501 | PAGE NO.: 057

LIGHTING FIXTURE SCHEDULE

TAG	DESCRIPTION	LAMPS TYPE/COLOR TEMPERATURE	MINIMUM DELIVERED LUMENS	ESTIMATED WATTS	VOLTS	MANUFACTURER
A	4'-0" LONG X 5"W x 3"H PENDANT MOUNTED LED LINEAR FIXTURE, 90 CRI. 0-10V DIMMING DRIVER. PENDANT MOUNT +8'-0"AFF WITH STEMS AND SWIVEL CANOPIES.	LED/ 3500K	4000	41	MVOLT	LITHONIA LIGHTING #ZLIFL484500LM OR EQUAL
B	4.5" DIA. LED GLOBE FIXTURE WITH GUARD, WALL-MOUNTED, A360 ALUMINUM BODY AND GUARD WITH GRAY EPOXY FINISH, HEAT RESISTANT FROSTED GLASS GLOBE LENS, ONE-PIECE SILICONE GASKET.	LED/ 4000K	1789	20	MVOLT	RIG-A-LITE #AVPH-20L2-U-HF-G-W-35 OR EQUAL

MECHANICAL EQUIPMENT POWER SCHEDULE

TAG	DESCRIPTION	VA	VOLT/Ø	CIRCUIT DATA		NON-FUSED DISCONNECT	FUSED DISCONNECT	COMBINATION DISCONNECT/MAGNETIC STARTER		REMARKS
				No. OF WIRE	CONDUIT			MAGNETIC STARTER	STARTER SIZE	
CU 1	CONDENSING UNIT	3,180	208V/1Ø	2#12 + 1#12 GRD	3/4"		30A/2P			
ACU-1 1	AIR HANDLING UNIT	1,350	208V/1Ø	2#12 + 1#12 GRD	3/4"		30A/2P			
SP 1	SUMP PUMP (ELEV #3)	1,143	480V/3Ø	3#12 + 1#12 GRD	3/4"	30A/3P	-			
SP 2	SUMP PUMP (ELEV #30)	1,905	480V/3Ø	3#12 + 1#12 GRD	3/4"	30A/3P	-			
CP 1	CONDENSATE PUMP	250	120V	2#12 + 1#12 GRD	3/4"					MANUAL MOTOR STARTER

PANEL SCHEDULE FOR PANEL "LA126"

VOLTS-PHASE-WIRE	BUS SIZE	INTERRUPTING CAP	MAIN BREAKER SIZE	MOUNTING
120/208V,3ø,4W	100A	10,000A SYM.	50A/3P	SURFACE

DESCRIPTION	VA ØA	VA ØB	VA ØC	POLE	AMP	CKT	ØA ØB ØC	CKT	AMP	POLE	VA ØA	VA ØB	VA ØC	DESCRIPTION
FIRE ALARM CONTROL PANEL	200			1	20	1		2	20	1	540			RECEPTACLE - ELEVATOR MACHINE RM.
ELEV. #3 CAB LT		200				3		4				180		RECEPTACLE - EQUIPMENT RM.
ELEV. #30 CAB LT			200			5		6					200	ELEV. #3 SCADA INTERFACE CABINET
FSD'S	100					7		8			200			ELEV. #30 SCADA INTERFACE CABINET
SPARE						9		10				500		FIELD COMMUNICATION CABINET
↓						11		12					400	CONDENSATE PUMP
↓						13		14			80			ELEV. #3 PIT LT.
ELEVATOR #3 A/C UNIT		1800				15		16				180		ELEV. #3 PIT RECEPT.
ELEVATOR #30 A/C UNIT			1800	↓	↓	17		18					80	ELEV. #30 PIT LT.
SPACE						19		20	↓	↓	180			ELEV. #30 PIT RECEPT.
↓						21		22						SPACE
SPARE				2	15	23		24	15	2			675	ACU-1
						25		26			675			
SPARE				2	30	27		28	30	2		1590		CU-1
						29		30					1590	
	300	2000	2000								1675	2450	2945	

VA PER PHASE: ØA= 1975 ØB= 4450 ØC= 4945

TOTAL VA = 11370 VA
TOTAL AMPS @ 120/208V,3Ø = 31.6 A

PANEL SCHEDULE FOR PANEL "P11"

VOLTS-PHASE-WIRE	BUS SIZE	INTERRUPTING CAP	MAIN BREAKER SIZE	MOUNTING
277/480V,3ø,4W	225A	35,000AIC.	225A/3P (NON-AUTO)	SURFACE

DESCRIPTION	VA ØA	VA ØB	VA ØC	POLE	AMP	CKT	ØA ØB ØC	CKT	AMP	POLE	VA ØA	VA ØB	VA ØC	DESCRIPTION
ELEVATOR #3, (40HP)	14404			3	90	1		2						
		14404				3		4	90	3				SPARE
			14404			5		6						
ELEVATOR #30, (40HP)	14404			3	90	7		8	20	1				SPARE
		14404				9		10	↓	↓				↓
			14404			11		12						
TRANSFORMER "X126"	5000			3	20	13		14						SPACE
		5000				15		16						↓
			5000			17		18						
LIGHTING - ELEV. MACH/ELEC. RM	287			1	20	19		20			381			
SPARE				↓	↓	21		22	15	3		381		ELEVATOR #3 SUMP PUMP, SP-1
↓						23		24					381	
SPARE				3	15	25		26			635			
						27		28	15	3		635		ELEVATOR #30 SUMP PUMP, SP-2
						29		30					635	
	34095	33808	33808								1016	1016	1016	

VA PER PHASE: ØA= 35,111 ØB= 34,824 ØC= 34,824

TOTAL VA 104,759 VA
TOTAL AMPS @ 277/480V,3Ø = 126 A

REV.	DATE	BY	SUB	APP.	DESCRIPTION
P	20260518				ISSUED FOR BID

DESIGNED: E. LAGUNDI
DRAWN: FWA TEAM
CHECKED: E. WONG
APPROVED: E. WONG
DATE: 20180816

REGISTERED PROFESSIONAL ENGINEER — EDWARD K.S. WONG — No. 004.6 — Exp. 9-30-2026 — ELECTRICAL — STATE OF CALIFORNIA

SAN FRANCISCO BAY AREA RAPID TRANSIT DISTRICT

F. W. ASSOCIATES, INC.
SUBMITTED

PGH WONG ENGINEERING, INC.
APPROVED

COLISEUM STATION ELEVATOR MODERNIZATION

LIGHTING FIXTURE SCHEDULE,
MECHANICAL EQUIPMENT SCHEDULE
& PANEL SCHEDULES

CADD FILENAME: 15NL-140-E601
SIZE: D
SCALE: NONE
CONTRACT NO.: 15NL-140
REV.: P
CONTRACT SHEET NO.: E601
PAGE NO.: 054

SUB-SHEET SET FOR PASSENGER STATION

A30 - COLISEUM STATION

BART SYSTEM MAP - AREA OF WORK

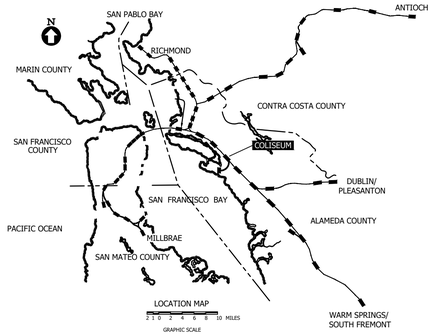

AREA OF WORK

GENERAL NOTES

1. THE EXISTING FIRE ALARM SYSTEM CONDITIONS SHOWN ON THESE DRAWINGS ARE BASED ON AVAILABLE AS-BUILT RECORD DRAWINGS AND LIMITED FIELD SURVEY. SEE AS-BUILT REFERENCE DRAWINGS FROM BART CONTRACT NO. 15IJ-130 FOR AS-BUILT DOCUMENTATION. VERIFY EXISTING CONDITIONS IN FIELD PRIOR TO WORK.
2. PROVIDE FIRE ALARM PROGRAMMING AND TESTING AS REQUIRED FOR MODIFICATIONS AND ADDITIONS TO THE EXISTING FIRE ALARM SYSTEM.
3. ALL NEW FIRE ALARM CONDUIT AND WIRING SHALL MAINTAIN CLASS A CONFIGURATION.
4. ALL FIRE ALARM WORK SHALL BE WITNESSED BY A BART FIRE ALARM TECHNICIAN.
5. ALL NEW FIRE ALARM DEVICES SHALL BE FROM THE SAME MANUFACTURER AS THE EXISTING FIRE ALARM SYSTEM AND ARE SUBJECT TO APPROVAL FROM THE BART ENGINEER.

SITE INFORMATION

OWNER:
BAY AREA RAPID TRANSIT

LOCATION:
BART COLISEUM STATION

ADDRESS:
7200 SAN LEANDRO BLVD
OAKLAND, CA 94612

MONITORING:
OFF-SITE MONITORING AT BART OPERATIONS CONTROL CENTER VIA EXISTING SUPERVISORY CONTROL AND DATA ACQUISITION (SCADA) SYSTEM

OCCUPANCY TYPE:
ASSEMBLY GROUP "A"
FIXED GUIDEWAY TRANSIT SYSTEM BUILDING

EXISTING FA SYSTEM DESCRIPTION

MANUFACTURER / MODEL:
SIEMENS DESIGO SERIES

TYPE:
FIRE ALARM SYSTEM - ADDRESSABLE
WITH EMERGENCY VOICE ALARM COMMUNICATIONS SYSTEM (EVACS)

WIRING METHOD:
SLC: CLASS A
NAC: CLASS A

NOTIFICATION DEVICES:
SPEAKER/STROBES

EVACUATION TYPE:
TOTAL BUILDING EVACUATION

PATHWAY SURVIVABILITY:
LEVEL 1 (EXISTING AUTOMATIC SPRINKLER SYSTEM)

SCOPE OF WORK

THE SCOPE OF WORK INCLUDES MODIFICATION OF AN EXISTING ADDRESSABLE FIRE ALARM SYSTEM TO SUPPORT THE MODERNIZATION AND RELOCATION OF EXISTING ELEVATOR CONTROLLERS AND THE AFFECTED SPACES:

1. RELOCATE EXISTING CONTROL RELAY DEVICES FROM EXISTING ELEVATOR MACHINE ROOM BEING DEMOLISHED TO NEW ELEVATOR MACHINE ROOM BEING CONSTRUCTED. EXTEND EXISTING SIGNALING LINE CIRCUIT AND RECONNECT RELOCATED DEVICES.
2. INSTALL NEW INITIATING DEVICES FOR DETECTION AT NEW ELEVATOR MACHINE ROOM LOCATED AT THE CONCOURSE (STREET) LEVEL SUPPORT SPACE.
3. THE EXISTING FIRE ALARM SYSTEM SHALL REMAIN OPERATIONAL.

EXISTING SEQUENCE OF OPERATION (FOR REFERENCE)

EVENT	RESPONSE: ANNUNCIATE EVENT AT THE MAIN STATION FACU & ANN(S)	ANNUNCIATE EVENT AT THE SUB STATION FACU	FIRE SIGNAL TO OCC VIA SCADA	TROUBLE SIGNAL TO OCC VIA SCADA	SUPERVISORY SIGNAL TO OCC VIA SCADA	OPERATE NOTIFICATION APPLIANCES	OPERATE ESCALATOR SHUT DOWN RELAYS	OPEN FARE GATES VIA BART SCADA	SHUT DOWN TRAIN CONTROL HVAC SUPPLY FAN	CLOSE FSD AT TRAIN CONTROL SUPPLY HVAC FAN	RECALL ELEVATOR TO PRIMARY FLOOR	RECALL ELEVATOR TO SECONDARY FLOOR	OPERATE ELEVATOR POWER SHUNT TRIP	PREEMPT PA ANNOUNCEMENT FROM OCC AT MAIN STATION
MANUAL FIRE ALARM PULL STATION	●	●	●			●	●	●						●
GENERAL AREA HEAT DETECTOR	●	●	●			●	●	●						●
GENERAL AREA SMOKE DETECTOR	●	●	●			●	●	●						●
TRAIN CONTROL HVAC SUPPLY FAN SMOKE DETECTOR	●	●	●						●					●
SMOKE DETECTORS MOUNTED IN AIR DUCTS OF HVAC SYSTEM	●	●			●				●					
SMOKE DETECTOR AIR INTAKE TRAIN CONTROL FAN	●	●	●			●	●	●	●	●				●
ELECTRICAL ISOLATION RELAY FAULT (24V)	●	●		●										
ELEVATOR MACHINERY ROOM HEAT DETECTOR	●	●	●			●	●	●			●		●	●
ELEVATOR MACHINERY ROOM SMOKE DETECTOR	●	●	●			●	●	●			●			●
ELEVATOR LOBBY HEAT DETECTOR (CONCOURSE)	●	●	●			●	●	●				●		●
ELEVATOR LOBBY HEAT DETECTOR (PLATFORMS)	●	●	●			●	●	●			●			●
FIRE SPRINKLER WATERFLOW SWITCH	●	●	●			●	●	●						●
FIRE SPRINKLER VALVE SUPERVISORY SWITCH	●	●	●		●									
SUB-STATION PANEL - ALARM	●	●	●			●	●	●						
SUB-STATION PANEL - SUPERVISORY	●	●			●									
SUB-STATION PANEL - TROUBLE	●	●		●										
SUB-STATION MANUAL FIRE ALARM PULL STATION	●	●	●			●	●	●						●
SUB-STATION AMBIENT BEAM DETECTOR COVERAGE	●	●	●			●	●	●						●
FIRE ALARM CONTROL UNIT FAULT	●	●		●										
NAC POWER SUPPLY FAULT	●	●		●										
NAC AMPLIFIER FAULT	●	●		●										
CIRCUIT FAULT	●	●		●										
MAIN STATION MANUAL MICROPHONE ACTIVATION	●	●			●	●								●

SYMBOL LEGEND

NOTE:
1. SEE AS-BUILT RECORD DRAWINGS FOR BART CONTRACT NO. 15IJ-130 FOR FULL LIST OF EXISTING FIRE ALARM SYSTEM EQUIPMENT, DEVICES, AND COMPONENTS. ONLY THOSE DEVICES AND APPLIANCES PERTINENT TO THE WORK OR SHOWN AS EXISTING ON PLANS ARE SHOWN BELOW.

* OR EQUAL PRODUCTS FOR ALL PRODUCTS LISTED

DEVICE & SYMBOL LEGEND

ALL PARTS ARE SIEMENS UNLESS OTHERWISE NOTED

SYMBOL	MODEL NUMBER	DESCRIPTION	CSFM LISTING NUMBER	ROUGH-IN
(1)	FDT421	INTELLIGENT HEAT DETECTOR HEAD	7270-0067:0262	DB-11
	DB-11	DETECTOR BASE	7300-0067:0134	4S DEEP BOX W/ 1-GANG RING
(2)	FDO421	INTELLIGENT PHOTOELECTRIC SMOKE DETECTOR HEAD	7272-0067:0258	DB-11
	DB-11	DETECTOR BASE	7300-0067:0134	4S DEEP BOX W/ 1-GANG RING
AIM S FDCIO	FDCIO422	INPUT/OUTPUT MODULE	7165-0067:0264	5S DEEP BOX W/ EXTENSION
AIM XTRI	XTRI-R	INTELLIGENT CONTROLLABLE RELAY W/ SINGLE INPUT MONITOR MODULE	7270-0067:0224	4S DEEP BOX
WP VP (1) AIM	DT-135WP	CONVENTIONAL WEATHERPROOF HEAT DETECTOR	7300-0067:0134	WP BOX W/ 1/2" NPT
	ADAPT PLATE	ADAPTER PLATE DECORATOR RING	7300-0067:0242	-
	XTRI-M	INTELLIGENT SINGLE INPUT MONITOR MODULE	7300-0067:0501	INSIDE WP BOX
	STI-9610	STI - STEEL WEB STOPPERS - HIGH PROFILE - SURFACE MOUNT	N/A	-
15 30 75 110	SLSPSWW-F	HIFI MULTI-CANDELA SPEAKER/LED STROBE, 70V, WALL MOUNT - WHITE, FIELD SELECTABLE 15/30/75/110cd, 1/8-2W	7320-0067:0503	4S DEEP BOX W/ EXTENSION
WP 115	SET-S17-W-WP	WEATHERPROOF SPEAKER/STROBE FIXED 155cd PER UL1638, 70V, WALL MOUNT - WHITE, FIELD SELECTABLE 1/8-8W	7125-0067:0254	MT-SUR-BOX-W

FA CIRCUIT LEGENDS

(2) Lx-xx — ANNOTATION/NOTES: Lx-xx SLC LINE CIRCUIT; VP VANDALISM PROTECTED; WP WEATHER PROTECTED

Sx-xx Vx-xx xxcd — ANNOTATION/NOTES: Sx-xx SPEAKER CIRCUIT; Vx-xx VISUAL (STROBE) CIRCUIT; xxcd VISUAL (STROBE) CANDELA RATING; VP VANDALISM PROTECTED; WP WEATHER PROTECTED

OTHER SYMBOLS

FAB — FIRE ALARM CONTROL/MONITOR BOX FOR UP TO (4) SLC MODULE WITH ENCLOSURE DIMENSIONS 12x12x6"

JB — JUNCTION BOX

——— CONDUIT, EXPOSED, 3/4" GRS, UON

– – – CONDUIT, HIDDEN OR EMBEDDED, 3/4" GRS, UON

L1 S1 — CONDUIT WITH CIRCUIT LABEL

CONDUIT GOING UP

CONDUIT GOING DOWN

ABBREVIATIONS

ANN	ANNUNCIATOR
cd	CANDELA
FA	FIRE ALARM
FAB	FIRE ALARM BOX
FACU	FIRE ALARM CONTROL UNIT
NAC	NOTIFICATION APPLIANCE CIRCUIT
SLC	SIGNALING LINE CIRCUIT
VP	VANDALISM PROTECTED
W	WATT
WP	WEATHER PROTECTED

REFER TO AS-BUILT RECORD DRAWINGS FOR EXISTING FIRE ALARM SYSTEM FOR FULL SYMBOL LEGENDS AND ABBREVIATIONS OF EXISTING ITEMS SHOWN ON PLANS

REV.	DATE	BY	SUB	APP.	DESCRIPTION
P	20260518				ISSUED FOR BID

DESIGNED: E. LAGUNDI
DRAWN: FWA TEAM
CHECKED: E. WONG
APPROVED: E. WONG
DATE: 20180816

REGISTERED PROFESSIONAL ENGINEER — EDWARD K.S. WONG — No.10436 — Exp.9-30-2026 — ELECTRICAL — STATE OF CALIFORNIA

SAN FRANCISCO BAY AREA RAPID TRANSIT DISTRICT

F. W. ASSOCIATES, INC. — SUBMITTED

PGH WONG ENGINEERING, INC. — APPROVED

COLISEUM STATION ELEVATOR MODERNIZATION

FIRE ALARM SYSTEM COVER SHEET

CADD FILENAME: 15NL-140-E701
SIZE: D | SCALE: NONE
CONTRACT NO.: 15NL-140 | REV.: P
CONTRACT SHEET NO.: E701 | PAGE NO.: 059

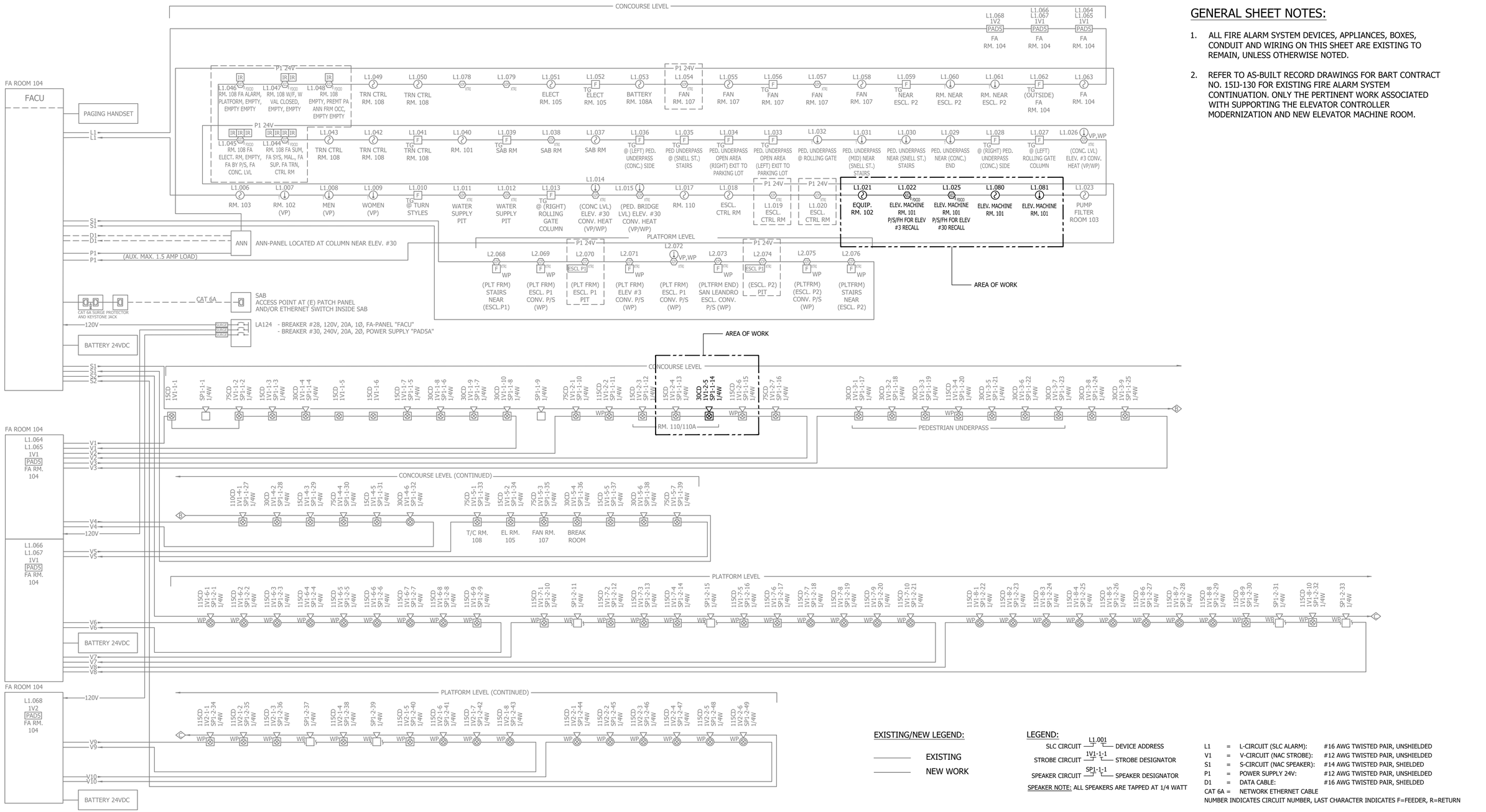

GENERAL SHEET NOTES:

1. ALL FIRE ALARM SYSTEM DEVICES, APPLIANCES, BOXES, CONDUIT AND WIRING ON THIS SHEET ARE EXISTING TO REMAIN, UNLESS OTHERWISE NOTED.
2. REFER TO AS-BUILT RECORD DRAWINGS FOR BART CONTRACT NO. 15IJ-130 FOR EXISTING FIRE ALARM SYSTEM CONTINUATION. ONLY THE PERTINENT WORK ASSOCIATED WITH SUPPORTING THE ELEVATOR CONTROLLER MODERNIZATION AND NEW ELEVATOR MACHINE ROOM.

EXISTING/NEW LEGEND:

EXISTING

NEW WORK

LEGEND:

SLC CIRCUIT L1.001 — DEVICE ADDRESS

STROBE CIRCUIT 1V1-1-1 — STROBE DESIGNATOR

SPEAKER CIRCUIT SP1-1-1 — SPEAKER DESIGNATOR

SPEAKER NOTE: ALL SPEAKERS ARE TAPPED AT 1/4 WATT

L1 = L-CIRCUIT (SLC ALARM): #16 AWG TWISTED PAIR, UNSHIELDED
V1 = V-CIRCUIT (NAC STROBE): #12 AWG TWISTED PAIR, UNSHIELDED
S1 = S-CIRCUIT (NAC SPEAKER): #14 AWG TWISTED PAIR, SHIELDED
P1 = POWER SUPPLY 24V: #12 AWG TWISTED PAIR, UNSHIELDED
D1 = DATA CABLE: #16 AWG TWISTED PAIR, SHIELDED
CAT 6A = NETWORK ETHERNET CABLE
NUMBER INDICATES CIRCUIT NUMBER, LAST CHARACTER INDICATES F=FEEDER, R=RETURN

REV.	DATE	BY	SUB	APP.	DESCRIPTION
P	20260518				ISSUED FOR BID

DESIGNED: E. LAGUNDI
DRAWN: FWA TEAM
CHECKED: E. WONG
APPROVED: E. WONG
DATE: 20180816

REGISTERED PROFESSIONAL ENGINEER — EDWARD K.S. WONG — No.10436 — Exp.9-30-2028 — ELECTRICAL — STATE OF CALIFORNIA

SAN FRANCISCO BAY AREA RAPID TRANSIT DISTRICT

F. W. ASSOCIATES, INC.

SUBMITTED

PGH WONG ENGINEERING, INC.

APPROVED

COLISEUM STATION ELEVATOR MODERNIZATION

FIRE ALARM SYSTEM
RISER DIAGRAM

CADD FILENAME: 15NL-140-E702
SIZE: D
SCALE: NONE
CONTRACT NO.: 15NL-140
REV.: P
CONTRACT SHEET NO.: E702
PAGE NO.: 060

GENERAL SHEET NOTES:

1. ALL FIRE ALARM SYSTEM DEVICES, APPLIANCES, BOXES, CONDUIT AND WIRING ON THIS SHEET ARE EXISTING TO REMAIN, UNLESS OTHERWISE NOTED.

2. REFER TO AS-BUILT RECORD DRAWINGS FOR BART CONTRACT NO. 151J-130 FOR EXISTING FIRE ALARM SYSTEM CONTINUATION. ONLY THE PERTINENT WORK ASSOCIATED WITH SUPPORTING THE ELEVATOR CONTROLLER MODERNIZATION AND NEW ELEVATOR MACHINERY SPACE IS SHOWN ON THIS PLAN.

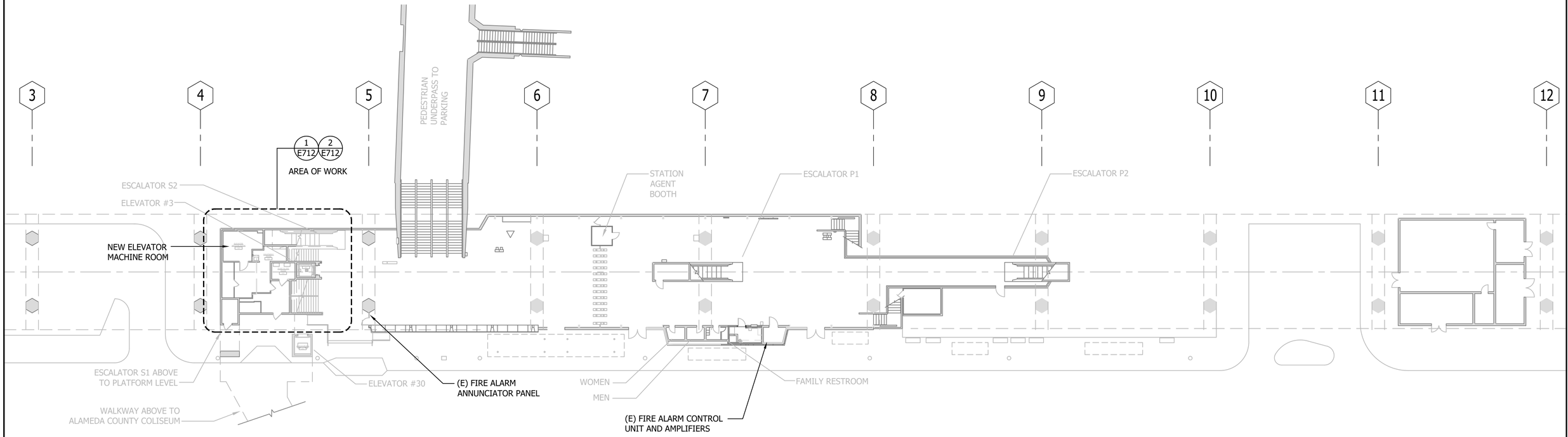

FIRE ALARM SYSTEM LOCATION PLAN - CONCOURSE LEVEL

SCALE: 1 = 20'-0"

1 / E711

RN

N

20' 0' 20' 40'

GRAPHIC SCALE

REV.	DATE	BY	SUB	APP.	DESCRIPTION
P	20260518				ISSUED FOR BID

DESIGNED: E. LAGUNDI
DRAWN: FWA TEAM
CHECKED: E. WONG
APPROVED: E. WONG
DATE: 20180816

REGISTERED PROFESSIONAL ENGINEER — EDWARD K.S. WONG — No. 16434 — Exp. 9-30-2026 — ELECTRICAL — STATE OF CALIFORNIA

SAN FRANCISCO BAY AREA RAPID TRANSIT DISTRICT

F. W. ASSOCIATES, INC. — SUBMITTED

PGH WONG ENGINEERING, INC. — APPROVED

COLISEUM STATION ELEVATOR MODERNIZATION

FIRE ALARM SYSTEM LOCATION PLAN
CONCOURSE LEVEL

CADD FILENAME: 15NL-140-E711
SIZE: D
SCALE: AS SHOWN
CONTRACT NO.: 15NL-140
REV.: P
CONTRACT SHEET NO.: E711
PAGE NO.: 061

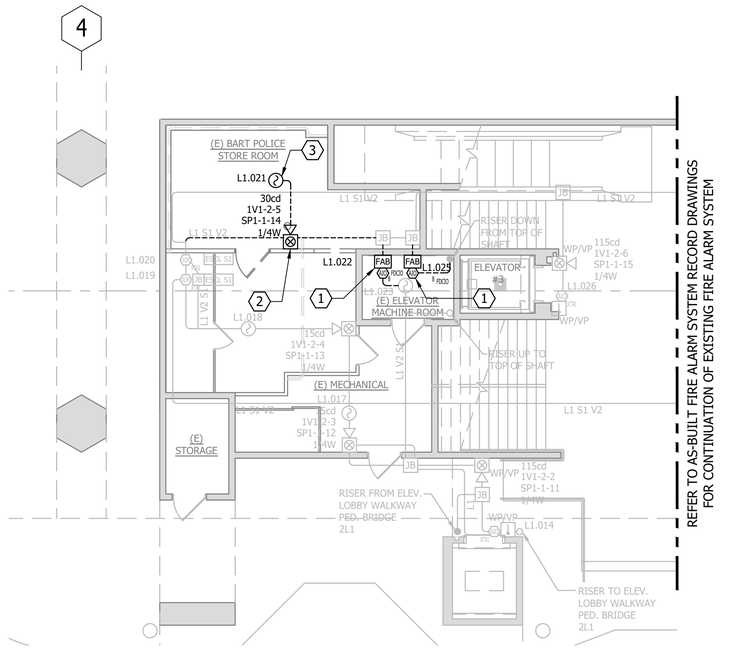

FIRE ALARM DEMOLITION PLAN
AT ELEVATOR MACHINE ROOM

SCALE: 1/8" = 1'-0"

1 E712 E711

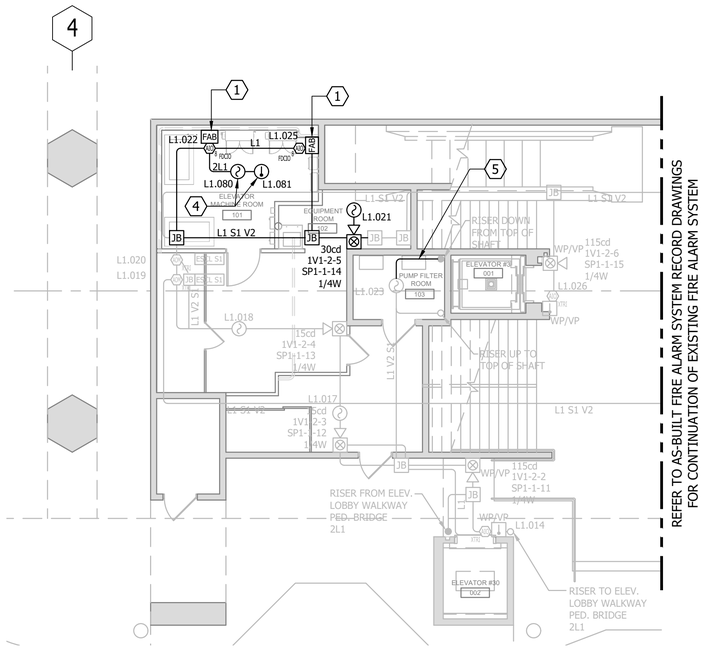

FIRE ALARM PLAN
AT ELEVATOR MACHINE ROOM

SCALE: 1/8" = 1'-0"

2 E712 E711

GENERAL SHEET NOTES:

1. ALL FIRE ALARM SYSTEM DEVICES, APPLIANCES, BOXES, CONDUIT AND WIRING ON THIS SHEET ARE EXISTING TO REMAIN, UNLESS OTHERWISE NOTED.
2. REFER TO AS-BUILT RECORD DRAWINGS FOR BART CONTRACT NO. 151J-130 FOR EXISTING FIRE ALARM SYSTEM CONTINUATION. ONLY THE PERTINENT WORK ASSOCIATED WITH SUPPORTING THE ELEVATOR CONTROLLER MODERNIZATION AND NEW ELEVATOR MACHINERY SPACE IS SHOWN ON THIS PLAN.
3. RE-PROGRAM FIRE ALARM SYSTEM AS NEEDED FOR INTERFACE WITH NEW AND EXISTING DEVICES SERVING ELEVATOR SAFETY FUNCTIONS PER SEQUENCE OF OPERATION MATRIX.
4. ALL NEW CONDUIT SHALL BE MINIMUM 3/4" GALVANIZED RIGID STEEL
5. SEE RISER DIAGRAM ON SHEET E702 FOR CIRCUIT WIRING REQUIREMENTS.

SHEET KEYNOTES:

1. RELOCATE EXISTING INPUT/OUTPUT MODULE AND ASSOCIATED 12x12x6 FIRE ALARM MODULE ENCLOSURE TO NEW ELEVATOR MACHINE ROOM AND CONNECT TO REPLACEMENT ELEVATOR CONTROLLERS FOR ELEVATOR #3 AND #30.
2. RELOCATE EXISTING SPEAKER/STROBE TO ACCOMMODATE INSTALLATION OF NEW WALL PARTITION AND TO SERVE NEW EQUIPMENT ROOM 102.
3. RELOCATE EXISTING SMOKE DETECTOR TO SERVE NEW EQUIPMENT ROOM 102.
4. PROVIDE NEW SMOKE DETECTOR AND RATE OF RISE HEAT DETECTOR IN NEW ELEVATOR MACHINE ROOM.
5. INTERCEPT AND EXTEND CONDUIT AND SLC CIRCUIT TO MAINTAIN CIRCUIT CONTINUITY OF SLC LOOP.

LEGEND:

INDICATES EXISTING CONDITION
INDICATES DEMO CONDITION
INDICATES NEW CONDITION

RN
N

8' 0' 8' 16'

GRAPHIC SCALE

REV.	DATE	BY	SUB	APP.	DESCRIPTION
P	20260518				ISSUED FOR BID

DESIGNED: E. LAGUNDI
DRAWN: FWA TEAM
CHECKED: E. WONG
APPROVED: E. WONG
DATE: 20180816

REGISTERED PROFESSIONAL ENGINEER EDWARD K.S. WONG No.104362 Exp.9-30-2026 ELECTRICAL STATE OF CALIFORNIA

SAN FRANCISCO BAY AREA RAPID TRANSIT DISTRICT

F. W. ASSOCIATES, INC.
SUBMITTED

PGH WONG ENGINEERING, INC.
APPROVED

COLISEUM STATION ELEVATOR MODERNIZATION

FIRE ALARM PLANS
DEMOLITION AND NEW WORK

CADD FILENAME: 15NL-140-E712
SIZE: D
SCALE: 1/8" = 1'-0"
CONTRACT NO.: 15NL-140
REV.: P
CONTRACT SHEET NO.: E712
PAGE NO.: 062

ABBREVIATIONS

C	CONDUIT
CAB	CABINET
CAT	CATEGORY AS IN CAT 6 CABLES
CCTV	CLOSED CIRCUIT TELEVISION
CU	COPPER
DIA	DIAMETER
(E)	EXISTING
ELEV	ELEVATOR
FEC	FIBER ENTRANCE CABINET
FO	FIBER OPTIC
FPP	FIBER PATCH PANEL
GND	GROUND
GRS	GALVANIZED RIGID STEEL
MC	MEDIA CONVERTER
MM	MULTIMODE
(N)	NEW
PLC	PROGRAMMABLE LOGIC CONTROLLER
PBX	PRIVATE BRANCH EXCHANGE
QTY	QUANTITY
(R)	REMOVE
RM	ROOM
RMS	REMOTE MONITORING SYSTEM
S	SWITCH
STR	STRAND
TYP	TYPICAL
VOIP	VOICE OVER INTERNET PROTOCOL

COMMUNICATIONS SYMBOLS

——CCTV——	CLOSED CIRCUIT TELEVISION SYSTEM CONDUIT AND WIRING
——FO——	CONDUIT WITH FIBER OPTIC CABLE
——T——	TELEPHONE CONDUIT AND WIRING
—o	CONDUIT GOING UP
—●	CONDUIT GOING DOWN
	(E) HANDS-FREE, WALL MOUNTED COURTESY PHONE SYSTEM
(2)	DATA OUTLET WITH DUAL RJ-45 CATEGORY 6 JACKS AND (2) CATEGORY 6 CABLES.
(2)	WALL MOUNTED TELEPHONE OUTLET WITH DUAL RJ-45 CATEGORY 6 JACK AND (2) CATEGORY 6 CABLES
MM	MULTIMODE FIBER OPTIC CABLE
C , CH	EXISTING FIXED POSITION ANALOG CCTV CAMERA - CEILING MOUNTED, WALL MOUNTED RESPECTIVELY, WITH EXISTING CO-AXIAL CABLES
C , CH	FIXED POSITION DIGITAL IP CCTV CAMERA - CEILING MOUNTED, WALL MOUNTED RESPECTIVELY, WITH CATEGORY 6A CABLES

GENERAL NOTES:

1. MINIMUM SIZE OF CONDUIT SHALL BE 3/4"C, UNLESS OTHERWISE NOTED.
2. ALL CONDUITS SHALL BE GALVANIZED RIGID STEEL (GRS).
3. PROVIDE NYLON PULL WIRES IN ALL EMPTY CONDUITS.

REV.	DATE	BY	SUB	APP.	DESCRIPTION
P	20260518				ISSUED FOR BID

DESIGNED: E. LAGUNDI
DRAWN: FWA TEAM
CHECKED: E. WONG
APPROVED: E. WONG
DATE: 20180816

REGISTERED PROFESSIONAL ENGINEER — EDWARD K.S. WONG — No.10436 — Exp.9-30-2026 — ELECTRICAL — STATE OF CALIFORNIA

SAN FRANCISCO BAY AREA RAPID TRANSIT DISTRICT

F. W. ASSOCIATES, INC. — SUBMITTED

PGH WONG ENGINEERING, INC. — APPROVED

COLISEUM STATION ELEVATOR MODERNIZATION

ABBREVIATIONS, SYMBOLS LEGEND AND GENERAL NOTES

CADD FILENAME: 15NL-140-T001
SIZE: D
SCALE: NONE
CONTRACT NO.: 15NL-140
REV.: P
CONTRACT SHEET NO.: T001
PAGE NO.: 063

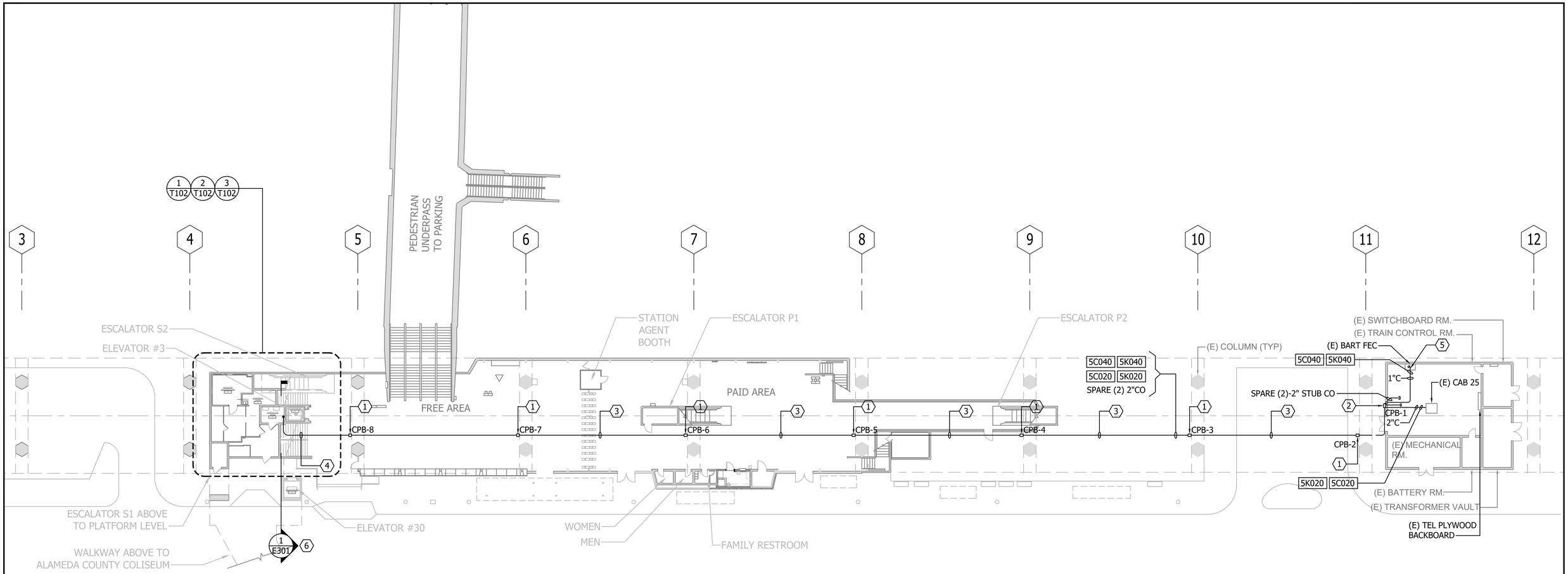

CONCOURSE LEVEL - COMMUNICATIONS PLAN

SCALE: 1" = 20'-0"

1 / T101

GENERAL SHEET NOTES:

1. SEE SHEET E101 FOR ELECTRICAL CONDUITS UTILIZING SAME CONDUIT PATHWAY.
2. REFER TO SHEET T601 FOR OVERALL COMMUNICATION SYSTEMS INTERFACE BLOCK DIAGRAM.
3. REFER TO SHEET T602 FOR DATA NETWORK RISER DIAGRAM.
4. REFER TO SHEET T603 FOR TELEPHONE SYSTEM RISER DIAGRAM.
5. REFER TO SHEET T604 FOR SCADA SYSTEM BLOCK DIAGRAM.
6. REFER TO SHEET T605 FOR CCTV SYSTEM RISER DIAGRAM.
7. REFER TO SHEET T102 FOR COMMUNICATIONS WORK AT CONCOURSE, PLATFORM, AND WALKWAY LEVELS.

SHEET KEYNOTES:

1. 20"W x 24"L x 10"D NEMA 4X STAINLESS STEEL PULLBOX WITH COVER, MOUNTED TO VERTICAL FACE OF (E) CONCRETE STRUCTURAL BENT, OR MOUNTED TO BOTTOM OF PLATFORM STRUCTURE, WHERE FEASIBLE.
2. WALL MOUNTED COMMUNICATIONS PULL BOX, 20"W x 24"H x 10"D, NEMA 4X PULLBOX WITH COVER, LOCATED ON EXTERIOR WALL OF (E) UTILITY BUILDING.
3. COMMUNICATIONS CONDUITS, AS FOLLOWS:
   (1) 1"C FOR FIBER OPTIC CABLE;
   (1) 2"C FOR CATEGORY 6 CABLES
   (2) 2"C ARE SPARE.
   ROUTE CONDUITS ALONG UNDERSIDE OF PLATFORM STRUCTURE, SIMILAR TO EXISTING CONDUITS. PROVIDE SUPPORTS AND CONDUIT TRAPEZE AS NEEDED.
4. CONDUITS TO AND FROM (E) ELEVATOR MACHINE ROOM SHALL BE ROUTED THROUGH ENCLOSED CONDUIT CHASE AT ELEVATOR #3, NEAR (E) CONDUITS AND PIPING. SEE DETAIL 1/E301 AND ARCHITECTURAL DRAWINGS FOR ADDITIONAL REQUIREMENTS.
5. FIBER OPTIC CABLE COILED ON TOP OF (E) BART FEC.
6. SEE ELECTRICAL DRAWING CROSS SECTION FOR CONDUIT RISER AT THIS LOCATION

LEGEND:

INDICATES EXISTING CONDITION

INDICATES NEW CONDITION

RN

N

20' 0' 20' 40'

GRAPHIC SCALE

REV.	DATE	BY	SUB	APP.	DESCRIPTION
P	20260518				ISSUED FOR BID

DESIGNED: E. LAGUNDI
DRAWN: FWA TEAM
CHECKED: E. WONG
APPROVED: E. WONG
DATE: 20180816

REGISTERED PROFESSIONAL ENGINEER EDWARD K.S. WONG No.19435 Exp.9-30-2026 ELECTRICAL STATE OF CALIFORNIA

SAN FRANCISCO BAY AREA RAPID TRANSIT DISTRICT

F. W. ASSOCIATES, INC. — SUBMITTED

PGH WONG ENGINEERING, INC. — APPROVED

COLISEUM STATION ELEVATOR MODERNIZATION

CONCOURSE LEVEL COMMUNICATION SYSTEM PLAN

CADD FILENAME: 15NL-140-T101
SIZE: D
SCALE: 1" = 20'-0"
CONTRACT NO.: 15NL-140
REV.: P
CONTRACT SHEET NO.: T101
PAGE NO.: 064

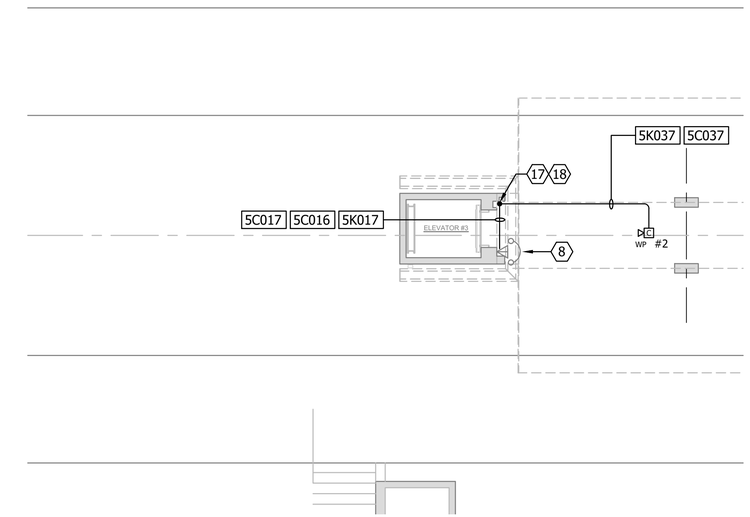

PARTIAL COMMUNICATIONS PLAN -
ELEVATOR #3 AT PLATFORM LEVEL

SCALE: 1/8" = 1'-0"

1 / T102 — T101

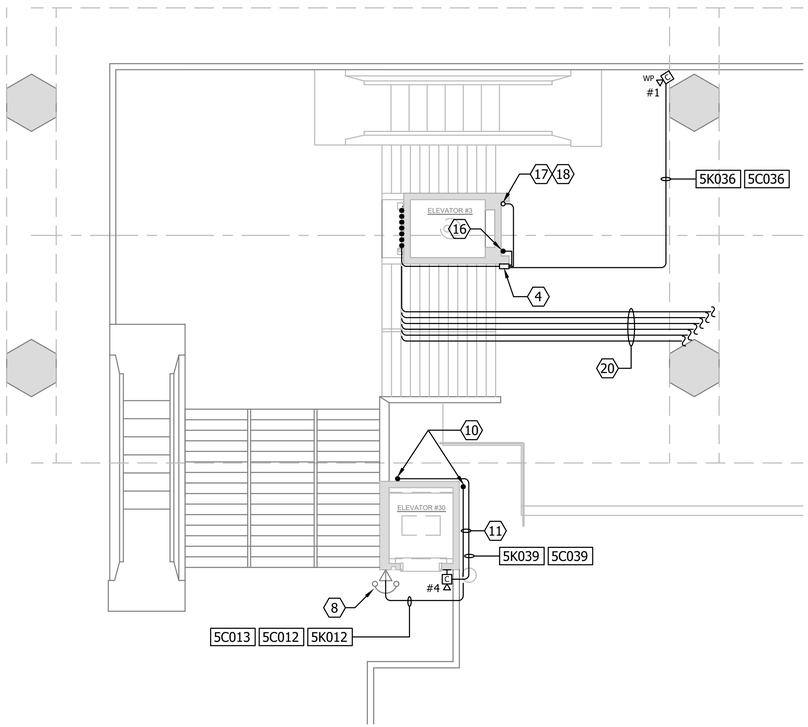

PARTIAL COMMUNICATIONS PLAN -
ELEVATOR #30 AT WALKWAY TO COLISEUM

SCALE: 1/8" = 1'-0"

3 / T102 — T101

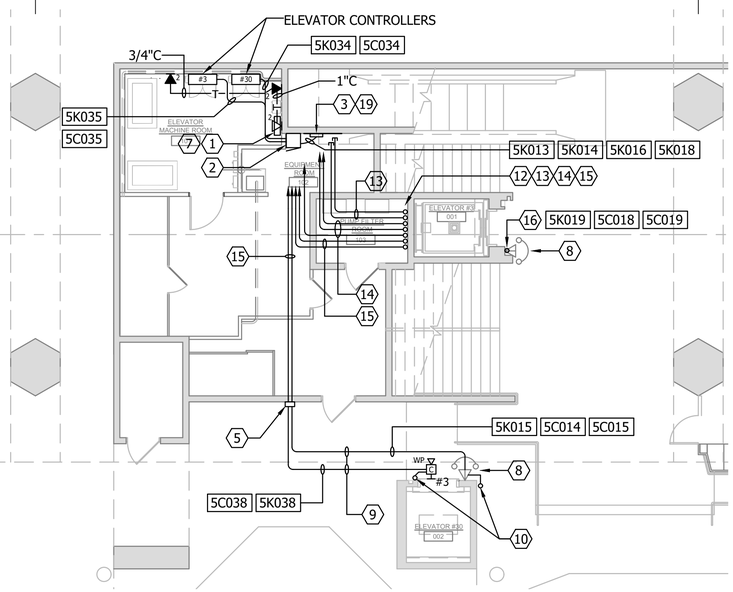

PARTIAL COMMUNICATIONS PLAN -
ELEVATOR MACHINE ROOM AT CONCOURSE LEVEL

SCALE: 1/8" = 1'-0"

2 / T102 — T101

GENERAL SHEET NOTES:

1. SEE ELECTRICAL DRAWINGS FOR POWER PROVISIONS TO COMMUNICATIONS CABINETS.

SHEET KEYNOTES:

1. (2) 24"W X 24"H X 10"D. ELEVATOR INTERFACE CABINETS, STACKED. PROVIDE (2) RJ-45 CAT. 6 KEYSTONE JACKS IN EACH CABINET, AND CAT. 6 CABLES PER JACK BACK TO COMMUNICATIONS INTERFACE CABINET.
2. COMMUNICATIONS INTERFACE CABINET, 30"W X 24"D X 60"H, FLOOR-STANDING NEMA 4X STAINLESS STEEL ENCLOSURE.
3. 24 PORT, CAT 6, PATCH PANEL WITH KEYSTONE JACKS.
4. COMMUNICATIONS PULL BOX, 12"W X 12"L X 8"D, NEMA 4X STAINLESS STEEL, WITH COVER, MOUNTED HIGH ON (E) ELEVATOR #3 SHAFT EXTERIOR WALL, NEAR UNDERSIDE OF PLATFORM STRUCTURE.
5. COMMUNICATIONS PULL BOX, 12"W X 12"L X 8"D, NEMA 4X STAINLESS STEEL, WITH COVER, MOUNTED ON WALL, BELOW WALKWAY STAIRS.
6. NOT USED.
7. NOT USED.
8. EXISTING COURTESY PHONE. TERMINATE NEW CAT. 6 ANALOG TELEPHONE CABLE AT EXISTING PHONE. COIL 12" OF CAT. 6 CABLE FOR FUTURE VOIP IN COURTESY PHONE BACK BOX.
9. CONDUITS ROUTED AT UNDERSIDE OF WALKWAY STAIRS.
10. CONDUITS UP AND DOWN TO ELEVATOR LANDING DEVICES.
11. ROUTE EXPOSED CONDUIT ALONG EXTERIOR OF EXISTING ELEVATOR SHAFT, SIMILAR TO (E) CONDUIT AT THIS LOCATION. PAINT CONDUIT TO MATCH (E) FINISH COLOR.
12. CONDUITS UP THROUGH ENCLOSED CONDUIT CHASE. SEE T101 FOR CONTINUATION.
13. (2) 2"C.O. FOR SPARE COMMUNICATIONS. STUB AT CEILING ABOVE COMMUNICATIONS INTERFACE CABINET.
14. (1) 1"C FOR FIBER OPTIC CABLE AND (1) 2"C FOR CAT. 6 CABLES.
15. (1) 3/4"C FOR CAT. 6A CCTV CABLES, AND (1) 1"C FOR CAT. 6 ANALOG/DIGITAL PHONE CABLES.
16. 3/4"C WITH 2-CAT. 6 CABLES FROM COMMUNICATIONS PULL BOX TO (E) COURTESY PHONE AT ELEVATOR #3 LANDING AT CONCOURSE LEVEL.
17. 3/4"C WITH 2-CAT. 6 CABLES FROM COMMUNICATIONS PULL BOX TO (E) COURTESY PHONE AT ELEVATOR #3 LANDING AT PLATFORM LEVEL. CORE DRILL (E) PLATFORM SLAB. SEE ALSO T102 FOR FIRE ALARM CONDUIT RISER TO BE INSTALLED AT THIS LOCATION.
18. 3/4"C WITH 1-CAT. 6A CABLE FROM COMMUNICATIONS PULL BOX TO NEW DIGITAL IP CCTV CAMERA AT PLATFORM CANOPY. CORE DRILL (E) PLATFORM SLAB. SEE ALSO T102 FOR FIRE ALARM CONDUIT RISER TO BE INSTALLED AT THIS LOCATION.
19. PROVIDE 1/8" THICK X 4' W X 8' H FIRE-TREATED PLYWOOD BACKBOARD.
20. COMMUNICATIONS CONDUITS ROUTED ON UNDERSIDE OF PLATFORM STRUCTURE. SEE SHEET T101 FOR CONTINUATION.

LEGEND:

INDICATES EXISTING CONDITION
INDICATES NEW CONDITION

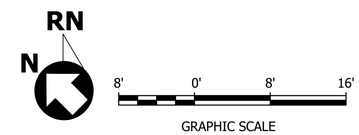

GRAPHIC SCALE

REV.	DATE	BY	SUB	APP.	DESCRIPTION
P	20260518				ISSUED FOR BID

DESIGNED: E. LAGUNDI
DRAWN: FWA TEAM
CHECKED: E. WONG
APPROVED: E. WONG
DATE: 20180816

REGISTERED PROFESSIONAL ENGINEER — EDWARD K.S. WONG — No. 10436 — Exp. 9-30-2026 — ELECTRICAL — STATE OF CALIFORNIA

SAN FRANCISCO BAY AREA RAPID TRANSIT DISTRICT

F. W. ASSOCIATES, INC. — SUBMITTED

PGH WONG ENGINEERING, INC. — APPROVED

COLISEUM STATION ELEVATOR MODERNIZATION

PARTIAL COMMUNICATIONS PLANS
CONCOURSE, PLATFORM, AND WALKWAY LEVELS

CADD FILENAME: 15NL-140-T102
SIZE: D | SCALE: 1/8" = 1'-0"
CONTRACT NO.: 15NL-140 | REV.: P
CONTRACT SHEET NO.: T102 | PAGE NO.: 065

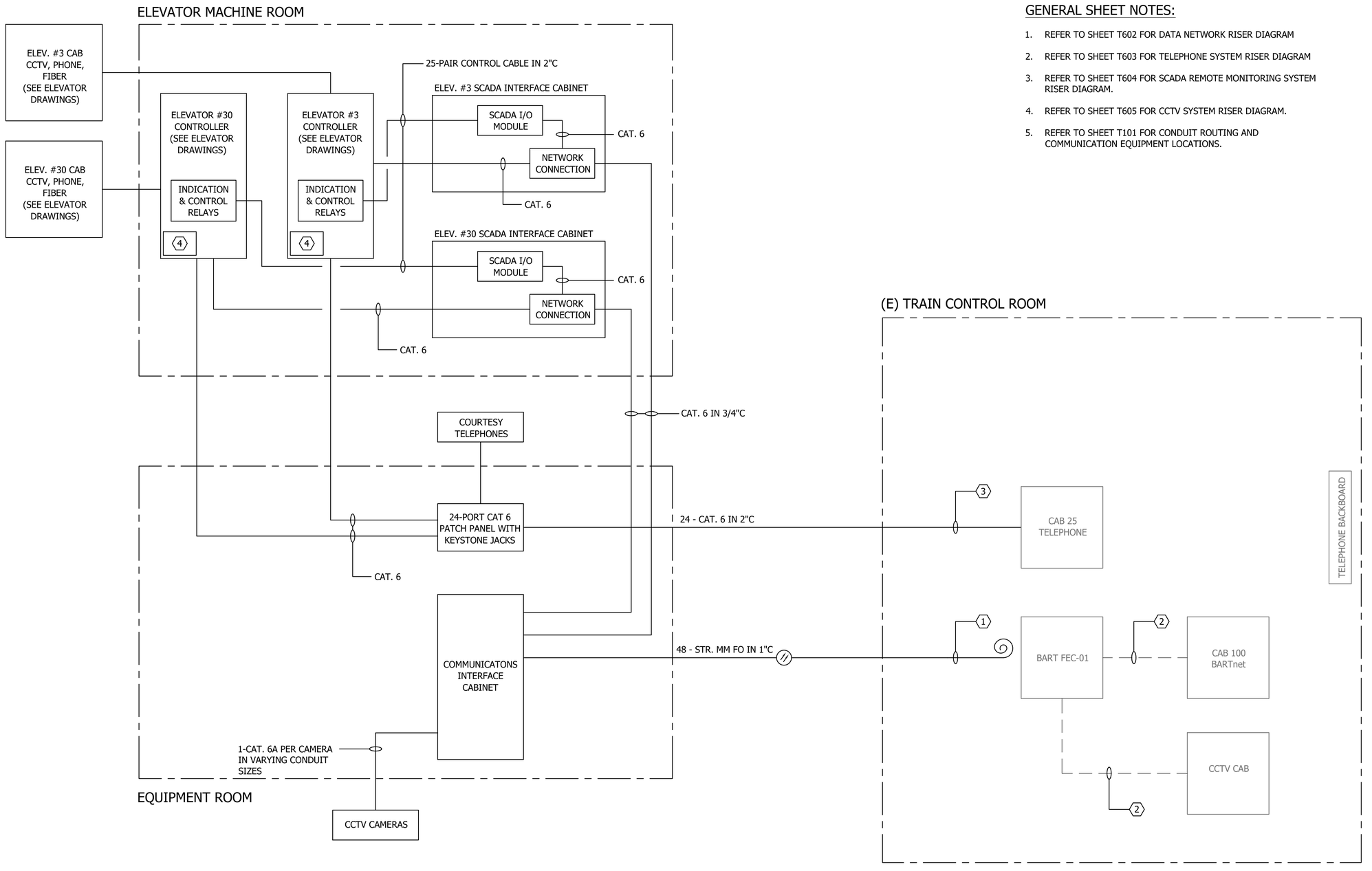

GENERAL SHEET NOTES:

1. REFER TO SHEET T602 FOR DATA NETWORK RISER DIAGRAM
2. REFER TO SHEET T603 FOR TELEPHONE SYSTEM RISER DIAGRAM
3. REFER TO SHEET T604 FOR SCADA REMOTE MONITORING SYSTEM RISER DIAGRAM.
4. REFER TO SHEET T605 FOR CCTV SYSTEM RISER DIAGRAM.
5. REFER TO SHEET T101 FOR CONDUIT ROUTING AND COMMUNICATION EQUIPMENT LOCATIONS.

⬡ SHEET KEYNOTES:

1. COIL CABLE(S) AND TIE ABOVE DESTINATION CABINET OR BACKBOARD. CABLE(S) SHALL HAVE MINIMUM 15 FEET OF SLACK. ALL TERMINATIONS TO BART INTERFACING CABINETS AND EQUIPMENT WITHIN THE EXISTING TRAIN CONTROL ROOM SHALL BE BY BART ONLY.
2. INTERFACING CONNECTIONS TO BART SYSTEMS EQUIPMENT AND CABINETS FROM THE BART FIBER ENTRANCE CABINET SHALL BE BY BART.
3. INSTALL DIN-RAIL MOUNTED RJ45 CAT. 6 KEYSTONE JACKS AT BOTH ENDS OF CAT. 6 CABLING BETWEEN EXISTING CAB 25 AND TELEPHONE PATCH PANEL.

LEGEND:

- – – – INDICATES WORK BY BART
- ——— INDICATES EXISTING
- ——— INDICATES NEW

COMMUNICATION SYSTEMS INTERFACE BLOCK DIAGRAM

REV.	DATE	BY	SUB	APP.	DESCRIPTION
P	20260518				ISSUED FOR BID

DESIGNED: E. LAGUNDI
DRAWN: FWA TEAM
CHECKED: E. WONG
APPROVED: E. WONG
DATE: 20180816

REGISTERED PROFESSIONAL ENGINEER — EDWARD K.S. WONG — No. 19143 — Exp. 9-30-2026 — ELECTRICAL — STATE OF CALIFORNIA

SAN FRANCISCO BAY AREA RAPID TRANSIT DISTRICT

F. W. ASSOCIATES, INC. — SUBMITTED

PGH WONG ENGINEERING, INC. — APPROVED

COLISEUM STATION ELEVATOR MODERNIZATION

COMMUNICATION SYSTEMS INTERFACE BLOCK DIAGRAM

CADD FILENAME: 15NL-140-T601
SIZE: D | SCALE: NONE
CONTRACT NO.: 15NL-140 | REV.: P
CONTRACT SHEET NO.: T601 | PAGE NO.: 066

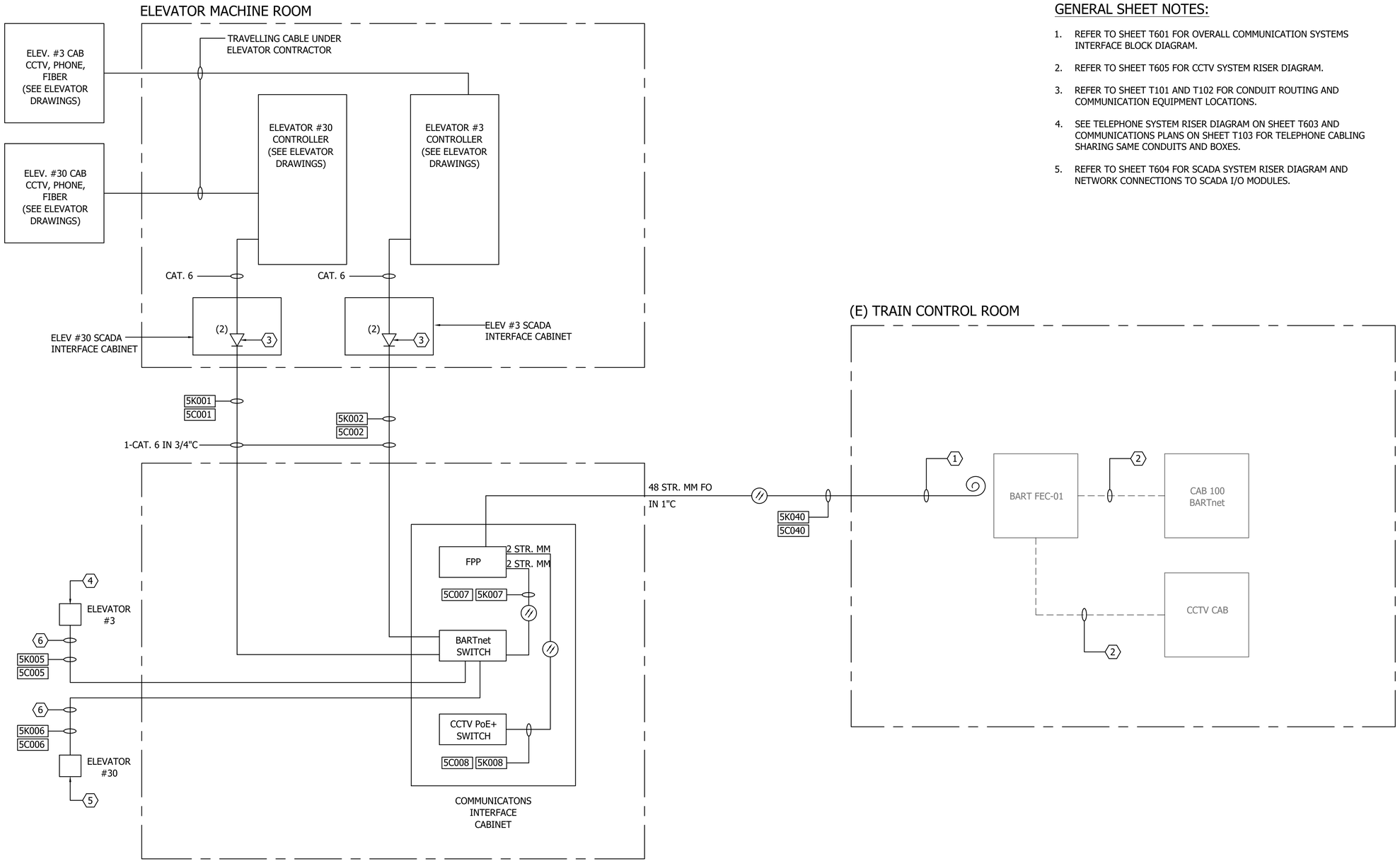

GENERAL SHEET NOTES:

1. REFER TO SHEET T601 FOR OVERALL COMMUNICATION SYSTEMS INTERFACE BLOCK DIAGRAM.
2. REFER TO SHEET T605 FOR CCTV SYSTEM RISER DIAGRAM.
3. REFER TO SHEET T101 AND T102 FOR CONDUIT ROUTING AND COMMUNICATION EQUIPMENT LOCATIONS.
4. SEE TELEPHONE SYSTEM RISER DIAGRAM ON SHEET T603 AND COMMUNICATIONS PLANS ON SHEET T103 FOR TELEPHONE CABLING SHARING SAME CONDUITS AND BOXES.
5. REFER TO SHEET T604 FOR SCADA SYSTEM RISER DIAGRAM AND NETWORK CONNECTIONS TO SCADA I/O MODULES.

SHEET KEYNOTES:

1. COIL CABLE(S) AND TIE ABOVE DESTINATION CABINET OR BACKBOARD. CABLE(S) SHALL HAVE MINIMUM 15 FEET OF SLACK. ALL TERMINATIONS TO BART INTERFACING CABINETS AND EQUIPMENT WITHIN THE EXISTING TRAIN CONTROL ROOM SHALL BE BY BART ONLY.
2. INTERFACING CONNECTIONS TO BART SYSTEMS EQUIPMENT AND CABINETS FROM THE BART FIBER ENTRANCE CABINET SHALL BE BY BART.
3. 2-PORT DATA OUTLETS WITHIN ELEVATOR MACHINE ROOM FOR CONNECTION TO ELEVATOR CONTROLLERS AND SCADA I/O MODULE NETWORK COMMUNICATIONS PORT.
4. COMMUNICATIONS PULL BOX, 12"W X 12"L X 8"D, NEMA 4X STAINLESS STEEL, WITH COVER, MOUNTED HIGH ON (E) ELEVATOR #3 SHAFT EXTERIOR WALL, NEAR UNDERSIDE OF PLATFORM STRUCTURE. SEE SHEET T103 FOR LOCATION.
5. COMMUNICATIONS PULL BOX, 12"W X 12"L X 8"D, NEMA 4X STAINLESS STEEL, WITH COVER, MOUNTED ON WALL, BELOW WALKWAY STAIRS. SEE SHEET T103 FOR LOCATION.
6. 1"C WITH:
   (2) CAT. 6 FOR ANALOG COURTESY PHONE
   (2) CAT. 6 FOR VOIP COURTESY PHONE (FUTURE)

LEGEND:

- INDICATES WORK BY BART
- INDICATES EXISTING
- INDICATES NEW

DATA NETWORK RISER DIAGRAM

REV.	DATE	BY	SUB	APP.	DESCRIPTION
P	20260518				ISSUED FOR BID

DESIGNED: E. LAGUNDI
DRAWN: FWA TEAM
CHECKED: E. WONG
APPROVED: E. WONG
DATE: 20180816

REGISTERED PROFESSIONAL ENGINEER — EDWARD K.S. WONG — No. E 14532 — Exp. 9-30-2026 — ELECTRICAL — STATE OF CALIFORNIA

SAN FRANCISCO BAY AREA RAPID TRANSIT DISTRICT

F. W. ASSOCIATES, INC. — SUBMITTED

PGH WONG ENGINEERING, INC. — APPROVED

COLISEUM STATION ELEVATOR MODERNIZATION

DATA NETWORK RISER DIAGRAM

CADD FILENAME: 15NL-140-T602
SIZE: D | SCALE: NONE
CONTRACT NO.: 15NL-140 | REV.: P
CONTRACT SHEET NO.: T602 | PAGE NO.: 067

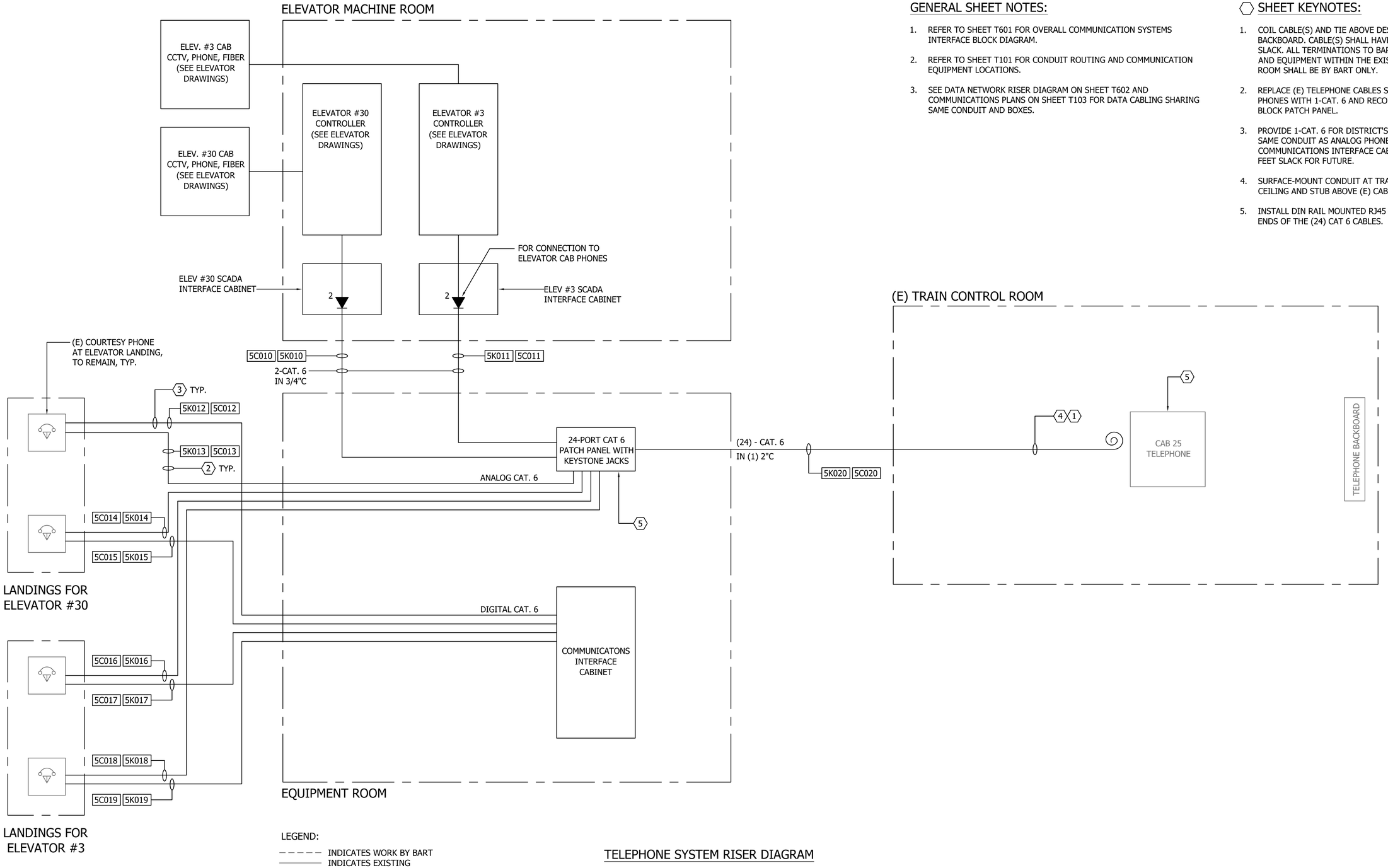

GENERAL SHEET NOTES:

1. REFER TO SHEET T601 FOR OVERALL COMMUNICATION SYSTEMS INTERFACE BLOCK DIAGRAM.
2. REFER TO SHEET T101 FOR CONDUIT ROUTING AND COMMUNICATION EQUIPMENT LOCATIONS.
3. SEE DATA NETWORK RISER DIAGRAM ON SHEET T602 AND COMMUNICATIONS PLANS ON SHEET T103 FOR DATA CABLING SHARING SAME CONDUIT AND BOXES.

SHEET KEYNOTES:

1. COIL CABLE(S) AND TIE ABOVE DESTINATION CABINET OR BACKBOARD. CABLE(S) SHALL HAVE MINIMUM 15 FEET OF SLACK. ALL TERMINATIONS TO BART INTERFACING CABINETS AND EQUIPMENT WITHIN THE EXISTING TRAIN CONTROL ROOM SHALL BE BY BART ONLY.
2. REPLACE (E) TELEPHONE CABLES SERVING (E) COURTESY PHONES WITH 1-CAT. 6 AND RECONNECT TO 24-PORT 110 BLOCK PATCH PANEL.
3. PROVIDE 1-CAT. 6 FOR DISTRICT'S FUTURE VOIP PHONE IN SAME CONDUIT AS ANALOG PHONE CABLING. HOMERUN TO COMMUNICATIONS INTERFACE CABINET AND COIL WITH 5 FEET SLACK FOR FUTURE.
4. SURFACE-MOUNT CONDUIT AT TRAIN CONTROL ROOM CEILING AND STUB ABOVE (E) CAB 25.
5. INSTALL DIN RAIL MOUNTED RJ45 KEYSTONE JACKS AT BOTH ENDS OF THE (24) CAT 6 CABLES.

LEGEND:

- – – – – INDICATES WORK BY BART
- ——— INDICATES EXISTING
- ——— INDICATES NEW

TELEPHONE SYSTEM RISER DIAGRAM

REV.	DATE	BY	SUB	APP.	DESCRIPTION
P	20260518				ISSUED FOR BID

DESIGNED: E. LAGUNDI
DRAWN: FWA TEAM
CHECKED: E. WONG
APPROVED: E. WONG
DATE: 20180816

EDWARD K.S. WONG No. 104358 Exp. 9-30-2026 ELECTRICAL - STATE OF CALIFORNIA - REGISTERED PROFESSIONAL ENGINEER

SAN FRANCISCO BAY AREA RAPID TRANSIT DISTRICT

F. W. ASSOCIATES, INC. — SUBMITTED

PGH WONG ENGINEERING, INC. — APPROVED

COLISEUM STATION ELEVATOR MODERNIZATION

TELEPHONE SYSTEM RISER DIAGRAM

CADD FILENAME: 15NL-140-T603
SIZE: D | SCALE: NONE
CONTRACT NO.: 15NL-140 | REV.: P
CONTRACT SHEET NO.: T603 | PAGE NO.: 068

GENERAL SHEET NOTES:

1. REFER TO SHEET T601 FOR OVERALL COMMUNICATION SYSTEMS INTERFACE BLOCK DIAGRAM.
2. REFER TO SHEET T101 FOR CONDUIT ROUTING AND COMMUNICATION EQUIPMENT LOCATIONS.
3. REFER TO SHEET T602 FOR DATA NETWORK RISER DIAGRAM FOR NETWORK PROVISIONS FOR ELEVATOR SCADA INTERFACE CABINETS TO THE COMMUNICATIONS INTERFACE CABINET.
4. REFER TO CONTRACT SPECIFICATIONS SECTION 27 60 00, SUPERVISORY CONTROL AND DATA ACQUISITION (SCADA) SYSTEM, FOR SCADA I/O MODULE, POWER SUPPLY, AND ASSOCIATED COMPONENTS.

⬡ SHEET KEYNOTES:

1. COIL CABLE(S) AND TIE ABOVE DESTINATION CABINET OR BACKBOARD. CABLE(S) SHALL HAVE MINIMUM 15 FEET OF SLACK. ALL TERMINATIONS TO BART INTERFACING CABINETS AND EQUIPMENT WITHIN THE EXISTING TRAIN CONTROL ROOM SHALL BE BY BART ONLY.
2. CONTRACTOR SHALL FURNISH THE SCANNER CARD, TO BE INSTALLED BY BART PERSONNEL.
3. REFER TO SPECIFICATIONS SECTION 14 24 00, ARTICLE 2.12 AND 2.14 FOR REQUIREMENTS FOR THE ELEVATOR INTERFACE CABINET.
4. DIN RAIL MOUNTED 20A/1P CIRCUIT BREAKER.

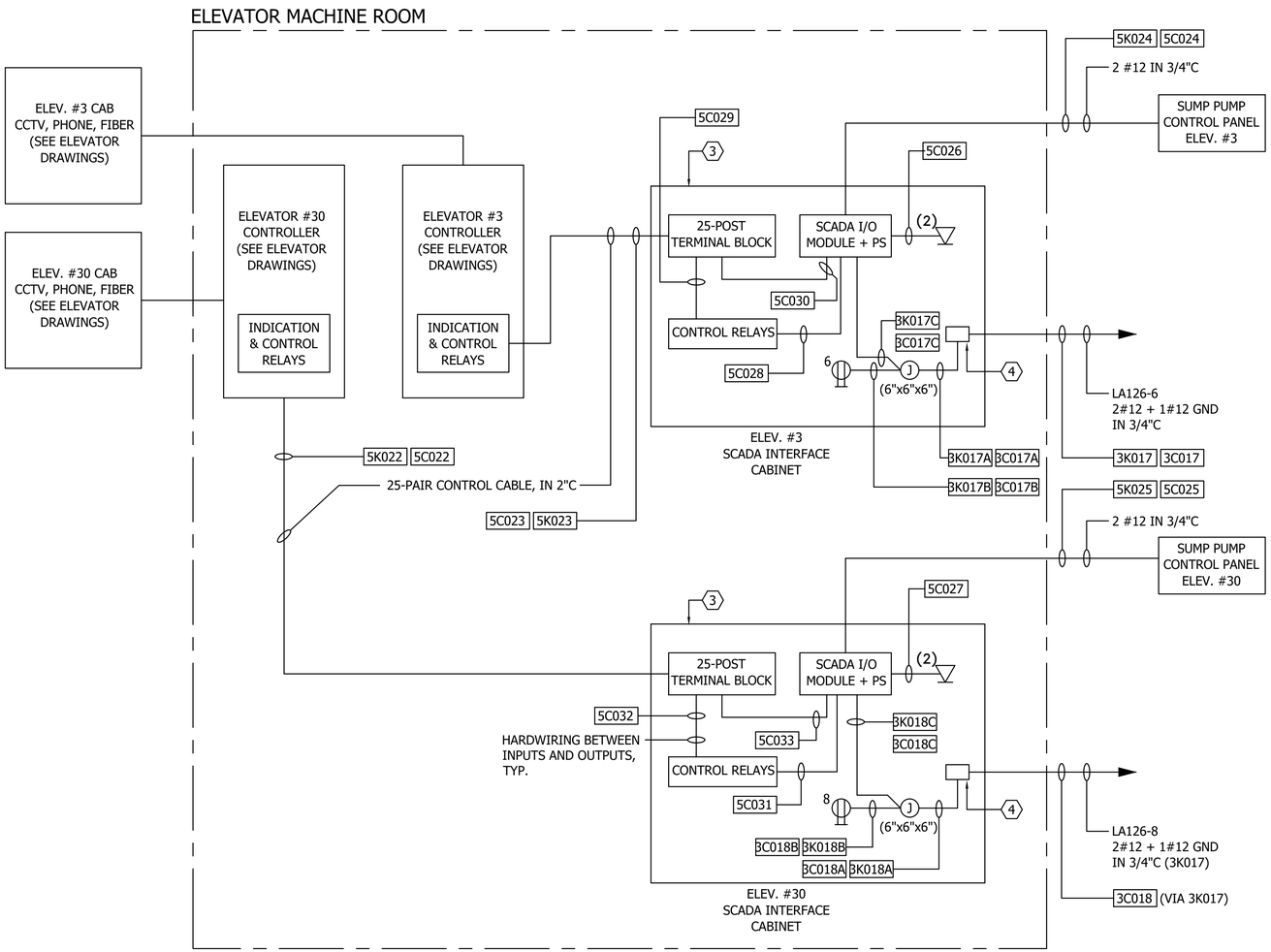

LEGEND:

- – – – – – INDICATES WORK BY BART
- ——— INDICATES EXISTING
- ——— INDICATES NEW

SCADA SYSTEM BLOCK DIAGRAM

REV.	DATE	BY	SUB	APP.	DESCRIPTION
P	20260518				ISSUED FOR BID

DESIGNED: E. LAGUNDI
DRAWN: FWA TEAM
CHECKED: E. WONG
APPROVED: E. WONG
DATE: 20180816

REGISTERED PROFESSIONAL ENGINEER — EDWARD K.S. WONG — No. 19436 — Exp. 9-30-2026 — ELECTRICAL — STATE OF CALIFORNIA

SAN FRANCISCO BAY AREA RAPID TRANSIT DISTRICT

F. W. ASSOCIATES, INC. — SUBMITTED

PGH WONG ENGINEERING, INC. — APPROVED

COLISEUM STATION ELEVATOR MODERNIZATION

SCADA SYSTEM BLOCK DIAGRAM

CADD FILENAME: 15NL-140-T604
SIZE: D | SCALE: NONE
CONTRACT NO.: 15NL-140 | REV.: P
CONTRACT SHEET NO.: T604 | PAGE NO.: 069

GENERAL SHEET NOTES:

1. REFER TO SHEET T601 FOR OVERALL COMMUNICATION SYSTEMS INTERFACE BLOCK DIAGRAM.
2. REFER TO SHEET T602 FOR DATA NETWORK RISER DIAGRAM.
3. REFER TO SHEET T101 FOR CONDUIT ROUTING AND COMMUNICATION EQUIPMENT LOCATIONS.

SHEET KEYNOTES:

1. COIL CABLE(S) AND TIE ABOVE DESTINATION CABINET OR BACKBOARD. CABLE(S) SHALL HAVE MINIMUM 15 FEET OF SLACK. ALL TERMINATIONS TO BART INTERFACING CABINETS AND EQUIPMENT WITHIN THE EXISTING TRAIN CONTROL ROOM SHALL BE BY BART ONLY.
2. INTERFACING CONNECTIONS TO BART SYSTEMS EQUIPMENT AND CABINETS FROM THE BART FIBER ENTRANCE CABINET SHALL BE BY BART.
3. FIXED VARIFOCAL IP CAMERA TO REPLACE (E) CCTV CAMERAS AT ELEVATOR LANDINGS.

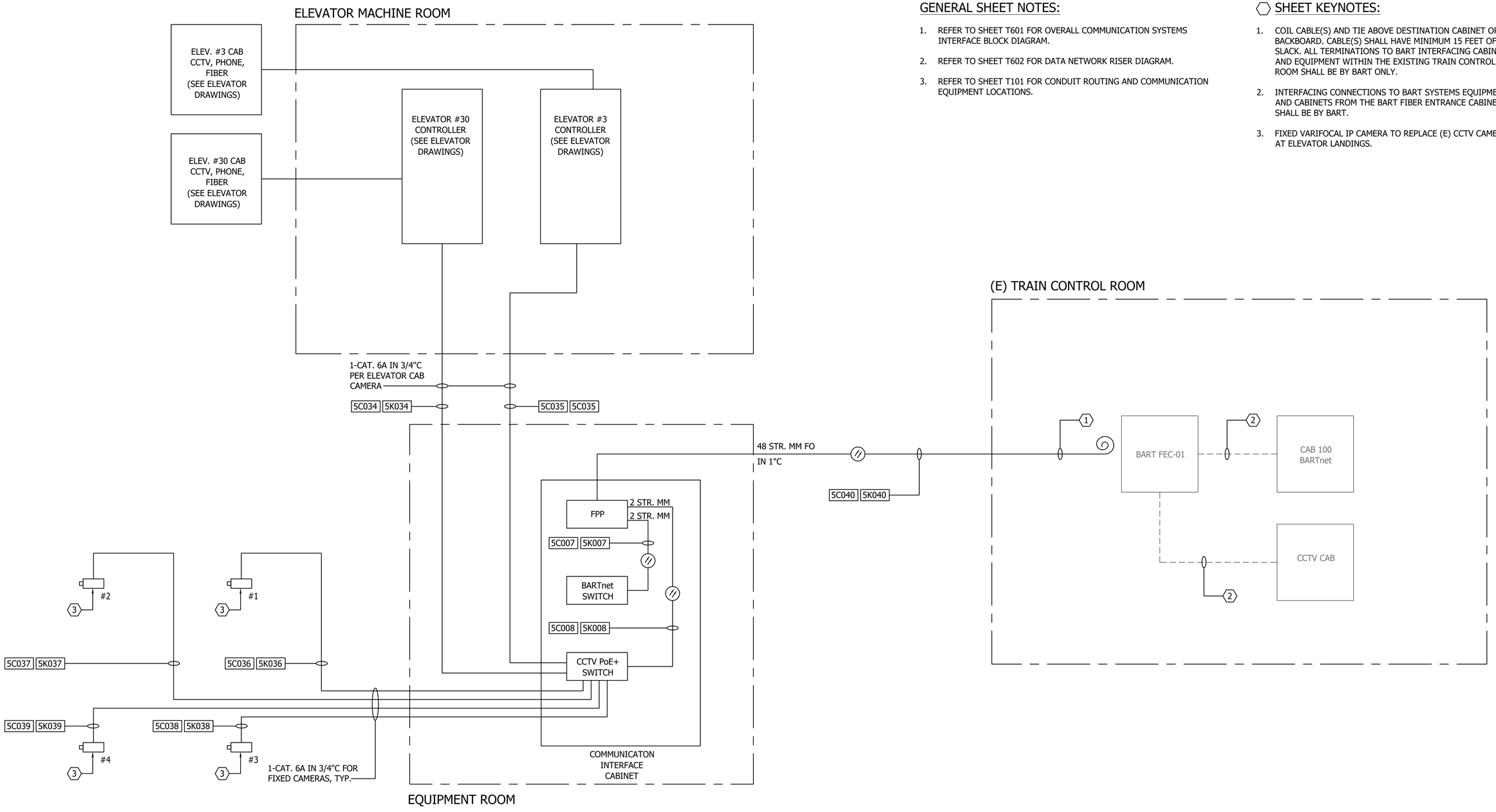

LEGEND:

- – – – – INDICATES WORK BY BART
- ——— INDICATES EXISTING
- ——— INDICATES NEW

CCTV SYSTEM RISER DIAGRAM

REV.	DATE	BY	SUB	APP.	DESCRIPTION
P	20260518				ISSUED FOR BID

DESIGNED: E. LAGUNDI
DRAWN: FWA TEAM
CHECKED: E. WONG
APPROVED: E. WONG
DATE: 20180816

REGISTERED PROFESSIONAL ENGINEER EDWARD K.S. WONG No. 10436 Exp. 9-30-2026 ELECTRICAL STATE OF CALIFORNIA

SAN FRANCISCO BAY AREA RAPID TRANSIT DISTRICT

F. W. ASSOCIATES, INC. — SUBMITTED

PGH WONG ENGINEERING, INC. — APPROVED

COLISEUM STATION ELEVATOR MODERNIZATION

CCTV SYSTEM RISER DIAGRAM

CADD FILENAME: 15NL-140-T605
SIZE: D
SCALE: NONE
CONTRACT NO.: 15NL-140
REV.: P
CONTRACT SHEET NO.: T605
PAGE NO.: 070

CIRCUIT NUMBER	APPLICATION	RUN			CONDUIT	CONDUCTORS				REMARKS
		FROM	VIA (CONDUIT DESIGNATION SERIES)	TO	SIZE & TYPE	SIZE (AWG)/ TYPE	NO.	VOLT	APPROXIMATE LENGTH (FT)	
5C001	COMMUNICATION CABLES (DATA SYSTEM)	BART NET SWITCH AT COMMUNICATION INTERFACE CABINET		2-PORT DATA OUTLET AT SCADA INTERFACE CABINET #30	3/4" GRS	CAT. 6	2	300	40	
5C002	COMMUNICATION CABLES (DATA SYSTEM)	BART NET SWITCH AT COMMUNICATION INTERFACE CABINET		2-PORT DATA OUTLET AT SCADA INTERFACE CABINET #3	3/4" GRS	CAT. 6	2	300	40	
5C003	NOT USED									
5C004	NOT USED									
5C005	COMMUNICATION CABLES (DATA SYSTEM)	BART NET SWITCH AT COMMUNICATION INTERFACE CAB		ELEVATOR #3 COMMUNICATION PULLBOX SHAFT EXTERIOR WALL	1" GRS	CAT. 6	4	300	100	SEE NOTE #6, T602
5C006	COMMUNICATION CABLES (DATA SYSTEM)	BART NET SWITCH AT COMMUNICATION INTERFACE CAB		ELEVATOR #30 COMMUNICATION PULLBOX, WALL MOUNTED BELOW WALKWAY STAIRS	1" GRS	CAT. 6	4	300	120	SEE NOTE #6, T602
5C007	COMMUNICATION CABLES (DATA SYSTEM)	FIBER PATCH PANEL (FPP) AT COMM. INTERFACE CABINET		BARTNET SWITCH	3/4" GRS	2-STR-MM-FO	1		10	
5C008	COMMUNICATION CABLES (DATA SYSTEM)	FIBER PATCH PANEL (FPP) AT COMM. INTERFACE CABINET		CCTV POE SWITCH	3/4" GRS	2-STR-MM-FO	1		10	
5C010	COMMUNICATION CABLES (TELEPHONE SYSTEM)	24 PORT CAT 6 PATCH PANEL KEYSTONE JACK AT EQUIP. ROOM		TELEPHONE OUTLET AT ELEV. #30, SCADA INTERFACE CABINET	3/4" GRS	CAT. 6	2	300	40	
5C011	COMMUNICATION CABLES (TELEPHONE SYSTEM)	24 PORT CAT 6 PATCH PANEL KEYSTONE JACK AT EQUIP. ROOM		TELEPHONE OUTLET AT ELEV. #3 SCADA INTERFACE CABINET	3/4" GRS	CAT. 6	2	300	40	
5C012	COMMUNICATION CABLES (TELEPHONE SYSTEM)	COMMUNICATION INTERFACE CABINET AT EQUIPT. ROOM		(E) COURTESY PHONE AT ELEVATOR #30 LANDING	3/4" GRS	CAT. 6	1	300	100	
5C013	COMMUNICATION CABLES (TELEPHONE SYSTEM)	24 PORT CAT 6 PATCH PANEL KEYSTONE JACK AT EQUIPT. ROOM	5K013 & COMM. INTERFACE CAB.	(E) COURTESY PHONE AT ELEVATOR #30 LANDING	3/4" GRS	CAT. 6	1	300	120	
5C014	COMMUNICATION CABLES (TELEPHONE SYSTEM)	24 PORT CAT 6 PATCH PANEL KEYSTONE JACK AT EQUIPT. ROOM	5K014 & COMM. INTERFACE CAB.	(E) COURTESY PHONE AT ELEVATOR #30 LANDING	3/4" GRS	CAT. 6	1	300	120	
5C015	COMMUNICATION CABLES (TELEPHONE SYSTEM)	COMMUNICATION INTERFACE CABINET AT EQUIPT. ROOM		(E) COURTESY PHONE AT ELEVATOR #30 LANDING	3/4" GRS	CAT. 6	1	300	100	
5C016	COMMUNICATION CABLES (TELEPHONE SYSTEM)	24 PORT CAT 6 PATCH PANEL KEYSTONE JACK AT EQUIPT. ROOM	5K016 & COMM. INTERFACE CAB.	(E) COURTESY PHONE AT ELEVATOR #3 LANDING	3/4" GRS	CAT. 6	1	300	130	
5C017	COMMUNICATION CABLES (TELEPHONE SYSTEM)	COMMUNICATION INTERFACE CABINET AT EQUIPMENT ROOM		(E) COURTESY PHONE AT ELEVATOR #3 LANDING	3/4" GRS	CAT. 6	1	300	110	
5C018	COMMUNICATION CABLES (TELEPHONE SYSTEM)	24 PORT CAT 6 PATCH PANEL KEYSTONE JACK AT EQUIPT. ROOM	5K018 & COMM. INTERFACE CAB.	(E) COURTESY PHONE AT ELEVATOR #3 LANDING	3/4" GRS	CAT. 6	1	300	100	
5C019	COMMUNICATION CABLES (TELEPHONE SYSTEM)	COMMUNICATION INTERFACE CABINET AT EQUIPT. ROOM		(E) COURTESY PHONE AT ELEVATOR #3 LANDING	3/4" GRS	CAT. 6	1	300	80	
5C020	COMMUNICATION CABLES (TELEPHONE SYSTEM)	24 PORT CAT 6 PATCH PANEL AT EQUIPT. ROOM	CPB-1 TO CPB-8, 5K040	(E) CAB 25 (TELEPHONE) AT (E) TRAIN CONTROL ROOM	2" GRS	CAT. 6	24	300	560	SEE NOTE #1, T603

CIRCUIT NUMBER	APPLICATION	SIZE (IN.)	TYPE	FROM	TO	APPROXIMATE LENGTH (FT)	REMARKS
5K001	COMMUNICATION CONDUIT (DATA SYSTEM)	3/4"	GRS	BART NET SWITCH AT COMMUNICATION INTERFACE CABINET	DATA OUTLET WITHIN ELEV. MACHINE ROOM	20	SEE SHEET NOTE #3, T602
5K002	COMMUNICATION CONDUIT (DATA SYSTEM)	3/4"	GRS	BART NET SWITCH AT COMMUNICATION INTERFACE CABINET	DATA OUTLET WITHIN ELEV. MACHINE ROOM	20	SEE SHEET NOTE #3, T602
5K003	NOT USED					40	
5K004	NOT USED					40	
5K005	COMMUNICATION CONDUIT (DATA SYSTEM)	3/4"	GRS	BART NET SWITCH AT COMMUNICATION INTERFACE CAB	ELEVATOR #3 COMMUNICATION PULLBOX SHAFT EXTERIOR WALL	80	
5K006	COMMUNICATION CONDUIT (DATA SYSTEM)	3/4"	GRS	BART NET SWITCH AT COMMUNICATION INTERFACE CAB	ELEVATOR #30 COMMUNICATION PULLBOX, WALL MOUNTED BELOW WALKWAY STAIRS	100	
5K007	COMMUNICATION CONDUIT (DATA SYSTEM)	3/4"	GRS	FIBER PATCH PANEL (FPP) AT COMM. INTERFACE CABINET	BARTNET SWITCH	4	
5K008	COMMUNICATION CONDUIT (DATA SYSTEM)	3/4"	GRS	FIBER PATCH PANEL (FPP) AT COMM. INTERFACE CABINET	CCTV POE SWITCH	4	
5K010	COMMUNICATION CONDUIT (TEL. SYSTEM)	3/4"	GRS	24 PORT CAT 6 PATCH PANEL AT EQUIP. ROOM	TELEPHONE OUTLET AT ELEV. #30, SCADA INTERFACE CABINET	20	SEE SHEET NOTE #3 & 19, T103
5K011	COMMUNICATION CONDUIT (TEL. SYSTEM)	3/4"	GRS	24 PORT CAT 6 PATCH PANEL AT EQUIP. ROOM	TELEPHONE OUTLET AT ELEV. #3, SCADA INTERFACE CABINET	20	SEE SHEET NOTE #3 & 19, T103
5K012	COMMUNICATION CONDUIT (TEL. SYSTEM)	3/4"	GRS	24 PORT CAT 6 PATCH PANEL AT EQUIP. ROOM	(E) COURTESY PHONE AT ELEVATOR #30 LANDING	80	
5K013	COMMUNICATION CONDUIT (TEL. SYSTEM)	3/4"	GRS	24 PORT CAT 6 PATCH PANEL AT EQUIP. ROOM	COMMUNICATION INTERFACE CABINET	10	
5K014	COMMUNICATION CONDUIT (TEL. SYSTEM)	3/4"	GRS	24 PORT CAT 6 PATCH PANEL AT EQUIP. ROOM	COMMUNICATION INTERFACE CABINET	10	
5K015	COMMUNICATION CONDUIT (TEL. SYSTEM)	3/4"	GRS	24 PORT CAT 6 PATCH PANEL AT EQUIP. ROOM	(E) COURTESY PHONE AT ELEVATOR #30 LANDING	80	
5K016	COMMUNICATION CONDUIT (TEL. SYSTEM)	3/4"	GRS	24 PORT CAT 6 PATCH PANEL AT EQUIP. ROOM	COMMUNICATION INTERFACE CABINET	10	
5K017	COMMUNICATION CONDUIT (TEL. SYSTEM)	3/4"	GRS	24 PORT CAT 6 PATCH PANEL AT EQUIP. ROOM	(E) COURTESY PHONE AT ELEVATOR #3 LANDING	90	
5K018	COMMUNICATION CONDUIT (TEL. SYSTEM)	3/4"	GRS	24 PORT CAT 6 PATCH PANEL AT EQUIP. ROOM	COMMUNICATION INTERFACE CABINET	10	
5K019	COMMUNICATION CONDUIT (TEL. SYSTEM)	3/4"	GRS	24 PORT CAT 6 PATCH PANEL AT EQUIP. ROOM	(E) COURTESY PHONE AT ELEVATOR #3 LANDING	60	
5K020	COMMUNICATION CONDUIT (TEL. SYSTEM)	2"	GRS	24 PORT CAT 6 PATCH PANEL AT EQUIP. ROOM	(E) CAB 25 (TELEPHONE) AT (E) TRAIN CONTROL ROOM	540	SEE SHEET #4, T101 & SHEET NOTE #1 , T603

REV.	DATE	BY	SUB	APP.	DESCRIPTION
P	20260518				ISSUED FOR BID

DESIGNED: E. LAGUNDI
DRAWN: FWA TEAM
CHECKED: E. WONG
APPROVED: E. WONG
DATE: 20180816

REGISTERED PROFESSIONAL ENGINEER EDWARD K.S. WONG No.10436 Exp.9-30-2026 ELECTRICIAN STATE OF CALIFORNIA

SAN FRANCISCO BAY AREA RAPID TRANSIT DISTRICT

F. W. ASSOCIATES, INC. — SUBMITTED

PGH WONG ENGINEERING, INC. — APPROVED

COLISEUM STATION ELEVATOR MODERNIZATION

COMMUNICATIONS CONDUIT AND CIRCUIT SCHEDULES

CADD FILENAME: 15NL-140-T606
SIZE: D | SCALE: NONE
CONTRACT NO.: 15NL-140 | REV.: P
CONTRACT SHEET NO.: T606 | PAGE NO.: 071

CIRCUIT NUMBER	APPLICATION	RUN			CONDUIT	CONDUCTORS				REMARKS
		FROM	VIA (CONDUIT DESIGNATION SERIES)	TO	SIZE & TYPE	SIZE (AWG)/ TYPE	NO.	VOLT	APPROXIMATE LENGTH (FT)	
5C022	COMMUNICATION CABLES (SCADA SYSTEM)	25 POST TERMINAL BLOCK ELEV #30 SCADA INTERFACE CAB	5K022	ELEVATOR #30 CONTROLLER	2" GRS	#16	25 PAIR	600	60	
5C023	COMMUNICATION CABLES (SCADA SYSTEM)	25 POST TERMINAL BLOCK ELEV #3 SCADA INTERFACE CAB	5K023	ELEVATOR #3 CONTROLLER	2" GRS	#16	25 PAIR	600	50	
5C024	COMMUNICATION CABLES (SCADA SYSTEM)	SUMP PUMP, SP-1, ELEVATOR #3 CONTROL PANEL	5K024	ELEVATOR #3 SCADA INTERFACE CABINET SCADA I/O MODULE	3/4" GRS	#12	2	600	60	
5C025	COMMUNICATION CABLES (SCADA SYSTEM)	SUMP PUMP, SP-2, ELEVATOR #30 CONTROL PANEL	5K025	ELEVATOR #30 SCADA INTERFACE CABINET SCADA I/O MODULE	3/4" GRS	#12	2	600	60	
5C026	COMMUNICATION CABLES (SCADA SYSTEM)	ELEVATOR #3, SCADA INTERFACE CABINET, SCADA I/O MODULE	5K026	2-PORT DATA JACK AT SCADA INTERFACE CABINET		CAT. 6	2	125	570	CABLE TERMINATIONS BY BART
5C027	COMMUNICATION CABLES (SCADA SYSTEM)	ELEVATOR #30, SCADA INTERFACE CABINET, SCADA I/O MODULE	5K027	2-PORT DATA JACK AT SCADA INTERFACE CABINET		CAT. 6	1	125	570	CABLE TERMINATIONS BY BART
5C028	COMMUNICATION CABLES (SCADA SYSTEM)	CONTROL RELAYS AT ELEV.#3, SCADA INTERFACE CABINET	5K028	SCADA I/O MODULE, ELEV.#3 SCADA INTERFACE CABINET		#16	3 PAIR	600	3	PER ELEVATOR SYSTEM NEEDS
5C029	COMMUNICATION CABLES (SCADA SYSTEM)	CONTROL RELAYS AT ELEV. #3, SCADA INTERFACE CABINET	5K029	25-POST TERMINAL BLOCK, ELEV. #3, SCADA INTERFACE CABINET		#16	3 PAIR	600	3	
5C030	COMMUNICATION CABLES (SCADA SYSTEM)	SCADA I/O MODULE AT ELEV. #3, SCADA INTERFACE CABINET	5K030	25-POST TERMINAL BLOCK, ELEV. #3, SCADA INTERFACE CABINET		#16	20 PAIR	125	3	
5C031	COMMUNICATION CABLES (SCADA SYSTEM)	CONTROL RELAYS ELEV. #30, SCADA INTERFACE CABINET	5K031	SCADA I/O MODULE, ELEV.#30, SCADA INTERFACE CABINET		#16	3 PAIR	600	3	
5C032	COMMUNICATION CABLES (SCADA SYSTEM)	CONTROL RELAYS ELEV. #30, SCADA INTERFACE CABINET	5K032	25-POST TERMINAL BLOCK, ELEV. #30 SCADA INTERFACE CABINET		#16	3 PAIR	600	3	
5C033	COMMUNICATION CABLES (SCADA SYSTEM)	SCADA I/O MODULE AT ELEV. #30, SCADA INTERFACE CABINET	5K033	25-POST TERMINAL BLOCK, ELEV. #30 SCADA INTERFACE CABINET		#16	20 PAIR	125	3	
5C034	COMMUNICATION CABLE (CCTV SYSTEM)	CCTV POE SWITCH AT COMMUNICATION INTERFACE CABINET	5K034	ELEVATOR #30 CONTROLLER	3/4" GRS	CAT. 6A	1	300	60	
5C035	COMMUNICATION CABLE (CCTV SYSTEM)	CCTV POE SWITCH AT COMMUNICATION INTERFACE CABINET	5K035	ELEVATOR #3 CONTROLLER	3/4" GRS	CAT. 6A	1	300	70	
5C036	COMMUNICATION CABLE (CCTV SYSTEM)	CCTV POE SWITCH AT COMMUNICATION INTERFACE CABINET	5K036	IP CAMERA #1 AT THE ELEVATOR #3 LANDING	3/4" GRS	CAT. 6A	1	300	150	
5C037	COMMUNICATION CABLE (CCTV SYSTEM)	CCTV POE SWITCH AT COMMUNICATION INTERFACE CABINET	5K037	IP CAMERA #2 AT THE ELEVATOR #3 LANDING	3/4" GRS	CAT. 6A	1	300	120	
5C038	COMMUNICATION CABLE (CCTV SYSTEM)	CCTV POE SWITCH AT COMMUNICATION INTERFACE CABINET	5K038	IP CAMERA #3 AT THE ELEVATOR #30 LANDING	3/4" GRS	CAT. 6A	1	300	100	
5C039	COMMUNICATION CABLE (CCTV SYSTEM)	CCTV POE SWITCH AT COMMUNICATION INTERFACE CABINET	5K039	IP CAMERA #4 AT THE ELEVATOR #30 LANDING	3/4" GRS	CAT. 6A	1	300	120	
5C040	COMMUNICATION CABLE	FIBER PATCH PANEL (FPP) AT COMM. INTERFACE CABINET	5K040	(E) BART FEC-01 CABINET AT (E) TRAIN CONTROL ROOM	1" GRS	48 STR-MM-F0	1		560	

CIRCUIT NUMBER	APPLICATION	SIZE (IN.)	TYPE	FROM	TO	APPROXIMATE LENGTH (FT)	REMARKS
5K022	COMMUNICATION CONDUIT (SCADA SYSTEM)	2"	GRS	25 POST TERMINAL AT ELEV #30 SCADA INTERFACE CABINET	ELEVATOR #30 CONTROLLER	40	
5K023	COMMUNICATION CONDUIT (SCADA SYSTEM)	2"	GRS	25 POST TERMINAL AT ELEV #3 SCADA INTERFACE CABINET	ELEVATOR #3 CONTROLLER	30	
5K024	COMMUNICATION CONDUIT (SCADA SYSTEM)	3/4"	GRS	SUMP PUMP, SP-1 ELEV #3 CONTROL PANEL	ELEVATOR #3 SCADA INTERFACE CABINET SCADA I/O MODULE	50	
5K025	COMMUNICATION CONDUIT (SCADA SYSTEM)	3/4"	GRS	SUMP PUMP, SP-2 ELEV #30 CONTROL PANEL	ELEVATOR #3 SCADA INTERFACE CABINET SCADA I/O MODULE	50	
5K026	NOT USED						
5K027	NOT USED						
5K027A	NOT USED						
5K028	NOT USED						
5K029	NOT USED						
5K030	NOT USED						
5K031	NOT USED						
5K032	NOT USED						
5K033	NOT USED						
5K034	COMMUNICATION CONDUIT (CCTV SYSTEM)	3/4"	GRS	COMMUNICATION INTERFACE CABINET AT EQUIP. ROOM	ELEVATOR #30 CONTROLLER	40	
5K035	COMMUNICATION CONDUIT (CCTV SYSTEM)	3/4"	GRS	COMMUNICATION INTERFACE CABINET AT EQUIP. ROOM	ELEVATOR #3 CONTROLLER	50	
5K036	COMMUNICATION CONDUIT (CCTV SYSTEM)	3/4"	GRS	CCTV POE SWITCH AT COMMUNICATION INTERFACE CABINET	IP CAMERA #1 AT THE ELEVATOR #3 LANDING	130	
5K037	COMMUNICATION CONDUIT (CCTV SYSTEM)	3/4"	GRS	CCTV POE SWITCH AT COMMUNICATION INTERFACE CABINET	IP CAMERA #1 AT THE ELEVATOR #3 LANDING	100	
5K038	COMMUNICATION CONDUIT (CCTV SYSTEM)	3/4"	GRS	CCTV POE SWITCH AT COMMUNICATION INTERFACE CABINET	IP CAMERA #3 AT THE ELEVATOR #30 LANDING	80	
5K039	COMMUNICATION CONDUIT (CCTV SYSTEM)	3/4"	GRS	CCTV POE SWITCH AT COMMUNICATION INTERFACE CABINET	IP CAMERA #4 AT THE ELEVATOR #30 LANDING	100	
5K040	COMMUNICATION CONDUIT	3/4"	GRS	FIBER PATCH PANEL (FFP) AT COMM. INTERFACE CABINET	(E) BART FEC-0 CABINET AT (E) TRAIN CONTROL ROOM	540	

REV.	DATE	BY	SUB	APP.	DESCRIPTION
P	20260518				ISSUED FOR BID

DESIGNED: E. LAGUNDI
DRAWN: FWA TEAM
CHECKED: E. WONG
APPROVED: E. WONG
DATE: 20180816

EDWARD K.S. WONG No.104535 Exp.9-30-2026 ELECTRICAL STATE OF CALIFORNIA REGISTERED PROFESSIONAL ENGINEER

SAN FRANCISCO BAY AREA RAPID TRANSIT DISTRICT

F. W. ASSOCIATES, INC. — SUBMITTED

PGH WONG ENGINEERING, INC. — APPROVED

COLISEUM STATION ELEVATOR MODERNIZATION

COMMUNICATIONS CONDUIT AND CIRCUIT SCHEDULES

CADD FILENAME: 15NL-140-T607
SIZE: D | SCALE: NONE
CONTRACT NO.: 15NL-140 | REV.: P
CONTRACT SHEET NO.: T607 | PAGE NO.: 072

CIRCUIT NUMBER	APPLICATION	FROM	VIA (CONDUIT DESIGNATION SERIES)	TO	CONDUIT	CONDUCTORS				REMARKS
					SIZE & TYPE	SIZE (AWG)/ TYPE	NO.	VOLT	APPROXIMATE LENGTH (FT)	
7C001	FIRE ALARM CABLE	FIRE ALARM CONTROL PANEL (FACP)	7K001	CONTROL MODULE L1-M1	3/4" GRS	#16	2	600	50	
7C002	FIRE ALARM CABLE	CONTROL MODULE L1-M1	7K002	CONTROL MODULE L1-M2	3/4" GRS	#16	2	600	20	
7C003	FIRE ALARM CABLE	CONTROL MODULE L1-M2	7K003	HEAT DETECTOR L1-D1	3/4" GRS	#16	2	600	20	
7C004	FIRE ALARM CABLE	HEAT DETECTOR L1-D1	7K004	HEAT DETECTOR M1-D2	3/4" GRS	#16	2	600	30	
7C005	FIRE ALARM CABLE	HEAT DETECTOR L1-D2	7K005	CONTROL MODULE L1-M3	3/4" GRS	#16	2	600	20	
7C006	FIRE ALARM CABLE	CONTROL MODULE L1-M3	12" x 12" x 6" BOX	CONTROL MODULE L1-M4		#16	2	600	2	
7C007	FIRE ALARM CABLE	CONTROL MODULE L1-M4	12" x 12" x 6" BOX	CONTROL MODULE L1-M5		#16	2	600	2	
7C008	FIRE ALARM CABLE	CONTROL MODULE L1-M5	12" x 12" x 6" BOX	CONTROL MODULE L1-M6		#16	2	600	2	
7C009	FIRE ALARM CABLE	CONTROL MODULE L1-M6	12" x 12" x 6" BOX	CONTROL MODULE L1-M7		#16	2	600	2	
7C010	FIRE ALARM CABLE	CONTROL MODULE L1-M7	12" x 12" x 6" BOX	CONTROL MODULE L1-M8		#16	2	600	2	
7C011	FIRE ALARM CABLE	CONTROL MODULE L1-M8	12" x 12" x 6" BOX	CONTROL MODULE L1-M9		#16	2	600	2	
7C012	FIRE ALARM CABLE	CONTROL MODULE L1-M9	12" x 12" x 6" BOX	CONTROL MODULE L1-M10		#16	2	600	2	
7C013	FIRE ALARM CABLE	CONTROL MODULE L1-M10	7K006	HEAT DETECTOR L1-D3	3/4" GRS	#16	2	600	120	
7C014	FIRE ALARM CABLE	HEAT DETECTOR L1-D3	7K007	HEAT DETECTOR L1-D4	3/4" GRS	#16	2	600	90	
7C015	FIRE ALARM CABLE	HEAT DETECTOR L1-D4	7K008	MONITOR MODULE L1-M11	3/4" GRS	#16	2	600	50	
7C016	FIRE ALARM CABLE	MONITOR MODULE L1-M11	7K010	MONITOR MODULE L1-M12	3/4" GRS	#16	2	600	20	
7C017	FIRE ALARM CABLE	MONITOR MODULE L1-M12	7K012	MONITOR MODULE L1-M13	3/4" GRS	#16	2	600	20	
7C018	FIRE ALARM CABLE	MONITOR MODULE L1-M13	7K014	MONITOR MODULE L1-M14	3/4" GRS	#16	2	600	130	
7C019	FIRE ALARM CABLE	MONITOR MODULE L1-M14	7K016	HEAT DETECTOR L1-D5	3/4" GRS	#16	2	600	60	
7C020	FIRE ALARM CABLE	HEAT DETECTOR L1-D5	7K017	HEAT DETECTOR L1-D6	3/4" GRS	#16	2	600	60	
7C021	FIRE ALARM CABLE	HEAT DETECTOR L1-D6	7K018	FIRE ALARM CONTROL PANEL (RETURN 1A)	3/4" GRS	#16	2	600	110	
7C022	FIRE ALARM CABLE	FIRE ALARM CONTROL PANEL (FACP)	7K019	(E) FIRE ALARM CONTROL PANEL (FACP)	3/4" GRS	#16	2	600	590	
7C023	FIRE ALARM CABLE	MONITOR MODULE L1-M11	7K009	SPRINKLER VALVE SWITCH (VS)	3/4" GRS	#16	2	600	20	
7C024	FIRE ALARM CABLE	MONITOR MODULE L1-M12	7K011	WATER FLOW SWITCH (WF)	3/4" GRS	#16	2	600	20	
7C025	FIRE ALARM CABLE	MONITOR MODULE L1-M13	7K013	WATER FLOW SWITCH (WF)	3/4" GRS	#16	2	600	20	
7C026	FIRE ALARM CABLE	MONITOR MODULE L1-M14	7K015	SPRINKLER VALVE SWITCH (VS)	3/4" GRS	#16	2	600	20	

CIRCUIT NUMBER	APPLICATION	SIZE (IN.)	TYPE	FROM	TO	APPROXIMATE LENGTH (FT)	REMARKS
7K001	FIRE ALARM CONDUIT	3/4"	GRS	FIRE ALARM CONTROL PANEL (FACP)	CONTROL MODULE L1-M1	40	
7K002	FIRE ALARM CONDUIT	3/4"	GRS	CONTROL MODULE L1-M1	CONTROL MODULE L1-M2	10	
7K003	FIRE ALARM CONDUIT	3/4"	GRS	CONTROL MODULE L1-M2	HEAT DETECTOR L1-D1	10	
7K004	FIRE ALARM CONDUIT	3/4"	GRS	HEAT DETECTOR L1-D1	HEAT DETECTOR L1-D2	20	
7K005	FIRE ALARM CONDUIT	3/4"	GRS	HEAT DETECTOR L1-D2	CONTROL MODULE L1-M3	10	
7K006	FIRE ALARM CONDUIT	3/4"	GRS	CONTROL MODULE L1-M10	HEAT DETECTOR L1-D3	100	
7K007	FIRE ALARM CONDUIT	3/4"	GRS	HEAT DETECTOR L1-D3	HEAT DETECTOR L1-D4	80	
7K008	FIRE ALARM CONDUIT	3/4"	GRS	HEAT DETECTOR L1-D4	MONITOR MODULE L1-M11	40	
7K009	FIRE ALARM CONDUIT	3/4"	GRS	MONITOR MODULE L1-M11	SPRINKLER VALVE SWITCH (VS)	10	
7K010	FIRE ALARM CONDUIT	3/4"	GRS	MONITOR MODULE L1-M11	MONITOR MODULE L1-M12	10	
7K011	FIRE ALARM CONDUIT	3/4"	GRS	MONITOR MODULE L1-M12	WATER FLOW SWITCH (WF)	10	
7K012	FIRE ALARM CONDUIT	3/4"	GRS	MONITOR MODULE L1-M12	MONITOR MODULE L1-M13	10	
7K013	FIRE ALARM CONDUIT	3/4"	GRS	MONITOR MODULE L1-M13	WATER FLOW SWITCH (WF)	10	
7K014	FIRE ALARM CONDUIT	3/4"	GRS	MONITOR MODULE L1-M13	MONITOR MODULE L1-M14	120	
7K015	FIRE ALARM CONDUIT	3/4"	GRS	MONITOR MODULE L1-M14	SPRINKLER VALVE SWITCH (VS)	10	
7K016	FIRE ALARM CONDUIT	3/4"	GRS	MONITOR MODULE L1-M14	HEAT DETECTOR L1-D5	120	
7K017	FIRE ALARM CONDUIT	3/4"	GRS	HEAT DETECTOR L1-D5	HEAT DETECTOR L1-D6	50	
7K018	FIRE ALARM CONDUIT	3/4"	GRS	HEAT DETECTOR L1-D6	FIRE ALARM CONTROL PANEL (FACP) RETURN 1A	100	
7K019	FIRE ALARM CONDUIT	3/4"	GRS	FIRE ALARM CONTROL PANEL (FACP)	(E) FIRE ALARM CONTROL PANEL (FACP)	580	

REV.	DATE	BY	SUB	APP.	DESCRIPTION
P	20260518				ISSUED FOR BID

DESIGNED: E. LAGUNDI
DRAWN: FWA TEAM
CHECKED: E. WONG
APPROVED: E. WONG
DATE: 20180816

REGISTERED PROFESSIONAL ENGINEER EDWARD K.S. WONG No.16438 Exp.9-30-2026 ELECTRICAL STATE OF CALIFORNIA

SAN FRANCISCO BAY AREA RAPID TRANSIT DISTRICT

F. W. ASSOCIATES, INC.
SUBMITTED

PGH WONG ENGINEERING, INC.
APPROVED

COLISEUM STATION ELEVATOR MODERNIZATION

FIRE ALARM SYSTEM
CIRCUIT & CONDUIT SCHEDULE

CADD FILENAME: 15NL-140-T609
SIZE: D | SCALE: NONE
CONTRACT NO.: 15NL-140 | REV.: P
CONTRACT SHEET NO.: T609 | PAGE NO.: 072

GENERAL NOTES:
ELEVATORS (ALL)

1.) ALL WORK TO CONFORM TO THE FOLLOWING:

- CALIFORNIA ELEVATOR SAFETY CODE (CALIFORNIA CODE OF REGULATIONS, TITLE 8, DIVISION 1, CHAPTER 4, SUBCHAPTER 6, ELEVATOR SAFETY ORDERS)
- INTERNATIONAL FIRE CODE (IFC 2015, STATE OF CALIFORNIA FIRE CODE 2016)
- NATIONAL ELECTRICAL CODE (NEC 2014, CALIFORNIA ELECTRICAL CODE 2016)
- CALIFORNIA ENERGY CODE 2016 (TITLE 24, PART 6)
- INTERNATIONAL BUILDING CODE (IBC 2015, CALIFORNIA BUILDING STANDARDS CODE 2016)
- AMERICAN SOCIETY OF MECHANICAL ENGINEERS (A17.1-2013)
- CALIFORNIA MECHANICAL CODE (2016)
- ICC/ANSI A117.1 (2017)
- AMERICAN DISABILITIES ACT ACCESSIBILITY GUIDELINES (ADAAG) FOR BUILDINGS AND FACILITIES 2010 AND LATER EDITIONS
- AMERICAN DISABILITIES ACT STANDARDS FOR TRANSPORTATION FACILITIES (2010)
- NATIONAL FIRE PROTECTION PROTECTION ASSOCIATION (NFPA) 10, 13, 70, 72, 101 AND 130 EDITIONS
- CALIFORNIA CODE OF REGULATIONS-TITLE 24, BUILDING STANDARDS, PART 7 STATE ELEVATOR SAFETY REGULATIONS
- FTA PROJECT AND CONSTRUCTION MANAGEMENT GUIDELINES (2003 UPDATE)
- PROGRAM/PROJECT MANAGER BUILDING STANDARDS & REVIEW PROCESS.

2.) REFER TO SPECIFICATIONS SECTION 14 24 00.

3.) THE CONTRACTOR SHALL KEEP ALL EQUIPMENT, PARTS OF THE BUILDING, EXTERIOR SPACE, ADJACENT STREETS, SIDEWALKS AND PAVEMENT FREE FROM MATERIALS AND DEBRIS RESULTING FROM THE EXECUTION OF THIS WORK. EXCESS MATERIALS WILL NOT BE PERMITTED TO ACCUMULATE EITHER ON THE INTERIOR OR EXTERIOR OF THE FACILITY.

4.) ANY DAMAGE TO SURROUNDING WALLS, FLOORS, CEILINGS OR ANY PART OF THE BUILDING OR EQUIPMENT CAUSED BY THE WORK OF THE CONTRACTOR SHALL BE RESTORED, REPAIRED AND/OR REPLACED TO THE SATISFACTION OF THE ENGINEER AT NO ADDITIONAL COST TO THE AUTHORITY.

5.) ALL WORK SHALL BE PERFORMED SO AS TO CAUSE THE LEAST POSSIBLE INCONVENIENCE AND DISTURBANCE TO THE FACILITY AND TENANTS OPERATION. REFER TO DIVISION I SPECIFICATIONS FOR HOURS OF WORK.

6.) CONTRACTOR SHALL PERFORM CLEAN UP OF ALL REFUSE, RUBBISH, SCRAP MATERIALS AND DEBRIS CAUSED BY THE WORK ON ON A DAILY BASIS.

7.) GENERAL SCOPE OF WORK:
1. CLEAN AND PAINT HOISWAY EQUIPMENT
2. STEAM CLEAN HOISTWAY FROM TOP LANDING TO PIT FLOOR
3. STEAM CLEAN PIT FLOOR
4. EPOXY COAT HOISTWAY AND PIT FLOOR

8.) FOR A COMPLETE LIST OF ITEMS TO BE RETAINED OR REPLACED, PLEASE REFER TO SPECIFICATION 14 24 00.

9.) TRAVELING CABLE SHALL BE BFS COMPLIANT

STAGING, PHASING AND SCHEDULE NOTES
ELEVATORS (ALL)

1.) CONTRACTOR SHALL ATTEND JOB PROGRESS AND COORDINATION MEETINGS WITH THE ENGINEER AS PER DIVISION 1 SPECIFICATIONS OR OTHERWISE REQUIRED BY THE ENGINEER.

DELIVERY AND RIGGING NOTES:
ELEVATORS (ALL)

1.) FOR DELIVERY, THE MAXIMUM ELEVATOR SECTION LENGTHS SHALL BE DETERMINED BY THE CONTRACTOR BASED ON SITE CONDITIONS. CONSIDERATION OF, AND NECESSITY FOR PROTECTION OF ALL INTERIOR AND EXTERIOR FINISHES SHALL BE MADE PRIOR TO TRANSPORTING ELEMENTS INTO FACILITIES.

2.) FOR DELIVERY, CONTRACTOR SHALL SUPPLY A DELIVERY NARRATIVE AND DRAWINGS THAT SPECIFICALLY STIPULATES THE EXACT SEQUENTIAL ACTIVITIES OF THE DELIVERY METHOD AND UNLOADING PROCEDURES TO BE PERFORMED. SUPPORTIVE DRAWINGS MUST ACCOMPANY THE NARRATIVE. THE DRAWINGS, AT MINIMUM, SHALL INCLUDE LOADING CRITERIA FOR EACH ELEVATOR SECTION, MEANS AND METHODS FOR TRANSPORTING IN AND OUT OF THE FACILITY, CRIBBING METHODS, FLOOR PROTECTION MATERIALS TO BE UTILIZED, AND SUPPORTING IILLUSTRATIVE DIAGRAMS SHOWING DELIVERY ROUTE IN AND OUT OF FACILITY. ALL INSTALLATION AND RIGGING DRAWINGS AND THE NARRATIVES ARE TO BE SIGNED AND SEALED BY A PROFESSIONALLY LICENSED ENGINEER IN THE STATE OF CALIFORNIA AND SUBMITTED TO THE ENGINEER FOR RECORD.

3.) FOR RIGGING, CONTRACTOR TO SUPPLY AN INSTALLATION AND RIGGING NARRATIVE THAT SPECIFICALLY STIPULATES THE EXACT SEQUENCIAL ACTIVITY OF WORK TO BE PERFORMED. SUPPORTIVE DRAWINGS MUST ACCOMPANY THE NARRATIVE. THE DRAWINGS, AT MINIMUM, SHALL INCLUDE LOADING CRITERIA ON SURROUNDING STRUCTURES, UTILIZATION OF HOIST BEAMS AND CHAIN FALLS WITHIN HOISTWAYS WHEN REQUIRED. ALL INSTALLATION AND RIGGING DRAWINGS AND THE NARRATIVES ARE TO BE SIGNED AND SEALED BY A PROFESSIONALLY LICENSED ENGINEER IN THE STATE OF CALIFORNIA AND SUBMITTED TO THE ENGINEER FOR RECORD.

STRUCTURAL NOTES:
ELEVATORS (ALL)

1.) FLOOR SLABS HAVE A LOADING RESTRICTION. SEE SHEET A010, GENERAL NOTES.

2.) ANY FILL & FINAL FLOORING AROUND ELEVATOR ENTRANCE LANDINGS TO BE LAID AFTER ELEVATOR SILLS ARE INSTALLED.

3.) LOADS INDICATED ARE FOR REFERENCE ONLY, ACTUAL LOADS WILL BE PROVIDED BY THE ELEVATOR CONTRACTOR AND REVIEWED BY THE AUTHORITY.

ELECTRICAL NOTES:
ELEVATORS (ALL)

1.) THE INSTALLATION OF ALL ELECTRICAL EQUIPMENT & WIRING SHALL CONFORM TO THE REQUIREMENTS OF THE STATE OF CALIFORNIA CODE OF REGULATIONS AND APPLICABLE NFPA ARTICLES (ARTICLE 430 AND 620).

2.) CONTRACTOR SHALL PROVIDE TEMPORARY LIGHTING IN THE WORK AREA AT NO ADDITIONAL COST. POWER SOURCE LOCATION TO BE DETERMINED BY CONTRACTOR IN CONJUCTION WITH THE ENGINEER.

PIT AREA NOTES:
ELEVATORS (ALL)

1.) CONTRACTOR SHALL PROVIDE A DRY ELEVATOR PIT THAT SHALL BE REINFORCED TO SUSTAIN VERTICAL FORCES FROM GUIDE RAILS AND BUFFERS. REFER TO REACTION LOADING DIAGRAM FOR APPROXIMATE LOADING CRITERIA. FINAL LOADING CRITERIA TO BE DICTATED BY THE CONTRACTOR BASED ON THEIR SPECIFIC EQUIPMENT REQUIREMENTS.

2.) SUMPS IN PITS SHALL BE COVERED. THE COVER SHALL BE SECURED AND LEVEL WITH THE PIT FLOOR. SUMP PIT PROVISIONS SHALL BE SUPPLIED AND INSTALLED BY THE CONTRACTOR.

3.) SUMPS LOCATED WITHIN ELEVATOR PITS SHALL NOT INTERFERE WITH ELEVATOR EQUIPMENT. SUMP PIT AND PUMP PROVISIONS SHALL BE SUPPLIED AND INSTALLED BY THE CONTRACTOR.

4.) CONTRACTOR SHALL PROVIDE AND INSTALL LIGHT FIXTURE(S) WITH PROTECTIVE COVER(S). CONTRACTOR TO COORDINATE LOCATION TO ENSURE THAT ELECTRICAL DEVICE WILL NOT INTERFERE WITH ELEVATOR EQUIPMENT.

5.) CONTRACTOR SHALL PROVIDE AND INSTALL AND DUPLEX GROUND FAULT CIRCUIT INTERUPTED (GFCI) CONVENIENCE OUTLET WITHIN PROXIMITY TO THE ELEVATOR PIT LADDER/ACCESS. CONTRACTOR TO COORDINATE LOCATION TO ENSURE THAT ELECTRICAL DEVICE WILL NOT INTERFERE WITH ELEVATOR EQUIPMENT.

6.) ANY ADDITIONAL ELECTRICAL POWER DEVICES, SUCH AS OUTLETS AND LIGHT SWITCHES, SHALL BE SUPPLIED AND INSTALLED BY THE CONTRACTOR AS INDICATED.

7.) ADDITIONAL CONCRETE INSERTS AND/OR RAIL BRACKET FASTENINGS TO BE FURNISHED BY CONTRACTOR. NO EPOXY INSERTS SHALL BE USED.

EXISTING PUMP UNIT AND SYSTEM OIL DISPOSAL NOTES:
HYDRAULIC ELEVATORS

1.) THE CONTRACTOR IS RESPONSIBLE FOR THE CLEAN OUT AND DISPOSAL OF THE EXISTING OIL WITHIN THE PUMP UNIT AND SYSTEM. AN ENVIRONMENTAL FIRM, LICENSED BY THE STATE OF CALIFORNIA, AND REGULARLY EMPLOYED IN THE RECOVERY AND REMOVAL OF HYDRAULIC FLUID CONTAMINATED SPOILS MATERIALS, SHALL BE ENGAGED TO EVACUATE, REMOVE, AND PROPERLY DISPOSE OF ALL HYDRAULIC FLUID CONTAMINATED SPOILS AND CONTAMINATED MATERIALS FROM THE PROJECT/JOB SITE.

2.) THE CONTRACTOR SHALL PROVIDE THE AUTHORITY ENGINEER WITH A NOTARIZED LETTER THAT THE OLD HYDRAULIC FLUID WAS DISPOSED OF IN ACCORDANCE WITH ALL APPLICABLE FEDERAL, STATE AND LOCAL REQUIREMENTS.

DISMANTLE AND REMOVALS PLAN NOTES:
HYDRAULIC ELEVATOR

1.) ALL MATERIALS SHALL BE REMOVED FROM THE SITE AS SOON AS PRACTICAL; THERE SHALL BE NO STORAGE OR STOCK-PILING OF OLD MATERIALS ON THE SITE.

THE CONTRACTOR SHALL REMOVE AND PROPERLY DISPOSE OF ELEVATOR SYSTEM COMPONENTS, INCLUDING ANY FILING, OR OBTAINING AND PAYING FOR ANY REQUIRED PERMITS. ALL WORK SHALL BE IN ACCORDANCE WITH ALL CODES AND OSHA REQUIREMENTS. ONLY APPROVED BARRIERS SHALL BE INSTALLED AT ANY OPENING THAT IS NEEDED TO BE LEFT OPEN WHILE UNATTENDED.

REMOVALS SHALL INCLUDE BUT IS NOT LIMITED TO THE FOLLOWING:
1. OLD HYDRAULIC OIL FROM TANK
2. PUMP UNIT
3. TANK UNIT
4. CONTROLLER AND STARTER
5. ALL WIRING, UNUSED CONDUITS AND ELECTRICAL BOXES IN MACHINE ROOM.
6. MAIN POWER WIRING AND CONDUIT BETWEEN MAINLINE DISCONNECT AND CONTROLLER

2.) THE IMPORTANCE OF REMOVING THE ELEVATOR EQUIPMENT IN A SAFE AND SATISFACTORY MANNER, DEMANDS THAT THE CONTRACTOR SHALL PROVE, TO THE SATISFACTION OF THE ENGINEER, THAT THEIR PERSONNEL PERFORMING THIS REMOVAL WORK HAVE ACTIVELY AND NORMALLY BEEN ENGAGED IN PERFORMING ELEVATOR WORK OF THIS NATURE FOR AT LEAST THE PAST FIVE YEARS. A FIRE WATCH SHALL BE PRESENT ANY TIME ANY WORK IS BEING PERFORMED WITH OPEN FLAME.

3.) THE CONTRACTOR SHALL USE ONLY EXPERIENCED, SKILLED, COMPETENT, TRAINED ELEVATOR MECHANICS IN THE PERFORMANCE OF THE REMOVAL WORK. IT IS NOT NECESSARY FOR ALL THE REQUIRED EXPERIENCE TO HAVE BEEN ACQUIRED WITH THE CONTRACTOR'S FIRM. IF, DUE TO THE FAULT OR NEGLECT OF THE CONTRACTOR, HIS AGENTS, OR EMPLOYEES, ANY OF THE AUTHORITY PROPERTY, EQUIPMENT, STOCK OR SUPPLIES ARE LOST OR DAMAGED DURING PERFORMANCE OF THIS CONTRACT, THE CONTRACTOR SHALL BE RESPONSIBLE FOR SUCH LOSS OR DAMAGE AND THE AUTHORITY, AT HIS OPTION, MAY EITHER REQUIRE THE CONTRACTOR TO REPLACE ALL PROPERTY OR TO REIMBURSE THE AUTHORITY FOR THE FULL VALUE OF THE LOST OR DAMAGED PROPERTY.

HOISTWAY NOTES:
ELEVATORS (ALL)

1.) FOR SIDES NOT USED FOR LOADING AND UNLOADING, ALL LEDGES OVER 2" IN ELEVATOR HOISTWAY TO BE BEVELED TO 75 DEGREES.

2.) ALL DIMENSIONS SHOWN ARE INTERIOR CLEAR DIMENSIONS AND ARE REQUIRED. SEE ARCHITECTURAL DRAWINGS FOR SURROUNDING WALLS AND CEILINGS.

CONTROLLER ROOM NOTES:
ELEVATORS (ALL)

1.) MINIMUM CONTROLLER ROOM HEIGHT = 8-0" CLEAR TO NEAREST OBSTRUCTION WITHIN ROOM.

2.) ONLY MACHINERY AND EQUIPMENT USED IN CONJUNCTION WITH THE FUNCTION OF THE ELEVATOR SHALL BE PERMITTED IN THE ELEVATOR CONTROLLER ROOM.

3.) ACCESS DOOR TO CONTROLLER ROOM MUST BE SECURED AND ONLY ACCESSIBLE TO AUTHORIZED PERSONNEL. DOOR SHALL BE SELF CLOSING, SELF LOCKING AND PROVIDED WITH APPROPRIATE SIGNAGE.

4.) BTU'S/HOUR SHOWN ARE PER EACH ELEVATOR. CONTROLLER ROOM AND MACHINE AREA TEMPERATURE TO BE MAINTAINED BETWEEN 55 DEGREES F TO 100 DEGREES F. RELATIVE HUMIDITY TO BE MAINTAINED AT 95 PERCENT OR LESS NON-CONDENSING. CONTROLLER ROOMS SHALL BE PROVIDED WITH NATURAL OR MECHANICAL MEANS TO KEEP THE AMBIENT AIR TEMPERATURE AND HUMIDITY IN THE RANGE SHOWN TO ENSURE NORMAL OPERATION OF THE ELEVATOR. THE TEMPERATURE AND HUMIDITY RANGE SHALL BE PERMANENTLY POSTED IN THE CONTROLLER ROOM.

5.) ALL DISCONNECTS AND CIRCUIT BREAKERS ARE TO BE LOCKABLE, FUSED AND LABELED WITH APPROPRIATE ELEVATOR EQUIPMENT No. AND IN ACCORDANCE WITH THE NATIONAL ELECTRICAL CODE (NEC). DISCONNECTS AND POWER FEEDS TO BE SUPPLIED AND INSTALLED BY THE CONTRACTOR AND TERMINATED AT THE POINT OF DISCONNECT. CONTRACTOR WILL RUN CIRCUITS/FEEDS FROM POINT OF DISCONNECT TO ELEVATOR EQUIPMENT.

6.) CONTRACTOR SHALL PROVIDE DEDICATED PHONE LINE(S) TERMINATING AT ELEVATOR CONTROLLER CABINET(S).

7.) CONTRACTOR SHALL SUPPLY AND INSTALL CLASS ABC TYPE OF FIRE EXTINGUISHER(S).

ELEVATOR CAB NOTES:
ELEVATORS (ALL)

1.) ALL DIMENSIONS SHOWN ARE INTERIOR CLEAR DIMENSIONS AND SHALL BE USED AS A REFERENCE FOR PROCUREMENT.

FINISHED FLOOR NOTES:
ELEVATORS (ALL)

1.) CONTRACTOR SHALL SUPPLY AND INSTALL FILL & FINAL FLOORING AROUND ELEVATOR SILLS AND LANDINGS AFTER ELEVATOR SILLS, ENTRANCES AND FRAMES HAVE BEEN INSTALLED.

BARRICADE NOTES
ELEVATORS (ALL)

1.) CONTRACTOR SHALL COORDINATE THE LOCATION OF ALL REQUIRED BARRICADES.

2.) ALL BARRICADES SHALL MEET ELEVATOR INDUSTRY FIELD EMPLOYEES' SAFETY HANDBOOK 2005 AND/OR LATER EDITIONS, AS APPLICABLE.

3.) ALL BARRICADES SHALL MEET OCCUPATIONAL SAFETY AND HEALTH ADMINISTRATION (OSHA) PART 29 CFR MINIMUM REQUIREMENTS FOR ACCESS AND SAFETY.

4.) BARRICADES SHALL BE PROVIDED AT ALL ENTRANCES ANYTIME THEY DO NOT HAVE FULL ENTRANCES.

5.) BARRICADES SHALL BE A MINIMUM OF 8'-0" IN HEIGHT.

6.) CONTRACTOR SHALL NOT UTILIZE BOLTS TO FASTEN BARRICADES TO GRANITE/TERRAZO/TILE FLOORING, CONTRACTOR SHALL UTILIZE AN ADHESIVE THAT MEETS WITH THE APPROVAL OF THE ENGINEER. ANY DAMAGE TO GRANITE/TERRAZO/TILE FLOORS OR METAL SURFACES ARE THE RESPONSIBILITY OF CONTRACTOR AND SHALL BE REPAIRED AND/OR REPLACED TO THE SATISFACTION OF THE ENGINEER AT NO ADDITIONAL COST TO THE AUTHORITY.

7.) CONTRACTOR SHALL SUBMIT ALL MATERIAL SAFETY DATA SHEETS (I.E. MSDS) FOR ALL ADHESIVES USED DURING BARRICADE ERECTION. COPY OF SHEETS TO BE SUBMITTED TO THE ENGINEER, FOR RECORD PRIOR TO START OF WORK.

8.) CONTRACTOR SHALL UTILIZE ALUMINUM STUD FRAMING AND GYPSUM BOARD FOR ALL BARRICADES.

9.) ALL FRAMING MEMBERS SHALL BE CONSTRUCTED WITH 2" X 4" MINIMUM STUDDING FOR ALL BARRICADES.

10.) ALL BARRICADES SHALL BE PAINTED WITH FIRE RETARDANT PAINT. PAINT COLOR IS TO BE DETERMINED BY THE ENGINEER.

11.) CONTRACTOR SHALL SUPPLY ALL BARRICADE ENTRANCES WITH LOCKS. ALL LOCKS MUST MEET WITH THE APPROVAL OF THE ENGINEER. SPARE KEYS FOR LOCKS SHALL BE SUPPLIED TO THE ENGINEER.

12.) CLEAR PASSAGEWAY SHALL REMAIN CLEAR FOR PUBLIC ACCESS. PASSAGEWAY CLEARANCE SHALL BE DETERMINED BY THE ENGINEER.

13.) ALL FLOORS INSIDE OF WORK AREA SHALL BE COVERED WITH MASONITE.

14.) ALL SURROUNDING WALLS WITHIN WORK AREAS SHALL BE COVERED WITH MASONITE. MASONITE SHALL EXTEND 4'-0" MINIMALLY ON ALL WALL AND ADJACENT SURFACES.

15.) ALL BARRICADE POSTED SIGNS CONTENT SHALL BE DETERMINED BY THE ENGINEER.

16.) FOR SECURITY PURPOSES, NO STORAGE ON TOP OF BARRICADES SHALL BE PERMITTED.

17.) CONTRACTOR SHALL PREPARE STAMPED DRAWINGS AND CALCULATIONS FOR THE TEMPORARY BARRIERS TO BE USED. THE DETAILS CALCULATED ARE TO INCLUDE THE BARRIER MATERIALS, ANCHORAGE AND ANY REQUIRE BRACING. BARRIER SHALL BE DESIGNED TO MEET OSHA AND CBC REQUIREMENTS AND CONSIDER ALL APPLICABLE LOADING. PLEASE CONFIRM IF THE CONTRACT DOCUMENT INCLUDES PEDESTRIAN PROTECTION.

REV.	DATE	BY	SUB	APP.	DESCRIPTION
P	20260518				ISSUED FOR BID

DESIGNED: S. STEINER
DRAWN: J. ARNDT
CHECKED: S. STEINER
APPROVED: A. DEFRANCESCO
DATE: 20200916

REGISTERED PROFESSIONAL ENGINEER AARON C. ARENDT S7022 5/8/2026 STRUCTURAL STATE OF CALIFORNIA

SAN FRANCISCO BAY AREA RAPID TRANSIT DISTRICT

GFT INC. — SUBMITTED

PGH WONG ENGINEERING, INC. — APPROVED

COLISEUM STATION ELEVATOR MODERNIZATION

GENERAL NOTES

CADD FILENAME: 15NL-140-X101
SIZE: D | SCALE: AS SHOWN
CONTRACT NO.: 15NL-140 | REV.: P
CONTRACT SHEET NO.: X101 | PAGE NO.: 073

EXISTING TECHNICAL DATA

2500 INGROUND HYDRAULIC

GENERAL INFORMATION	REMARKS
SEISMIC CONDITIONING	EXISTING
ELEVATOR NO.(S)	3
CLASSIFICATION	PASSENGER
ELEVATOR TYPE	HYDRAULIC
CAPACITY (LBS.)	2500
SPEED (FPM)	60 (VIF)
JACK TYPE	INGROUND
OPERATION	SELECTIVE COLLECTIVE
TOTAL TRAVEL	25'-0" (VIF)
DOOR TYPE	TWO SPEED CENTER OPENING
DOOR SIZE (WIDTH AND HEIGHT)	3'-6" W X 7'-0" H.
LNDGS./OPNGS. (FRONT)	2
LNDGS./OPNGS. (REAR)	0
ADA COMPLIANT FOR WHEELCHAIR ACCESS AND NOMINAL TURNING RADIUS	YES
24" X 76" STRETCHER COMPLIANT (IBC 2000, IBC 2003)	NO
24" X 84" STRETCHER COMPLIANT (IBC 2006)	NO
24" X 84" STRETCHER COMPLIANT WITH NOT LESS THAN 5" RADIUS CORNERS (IBC 2009, IBC 2012)	NO

ELECTRICAL INFORMATION

MAINLINE POWER REQUIREMENT (STANDARD)	
VOLTAGE (V)	480
PHASE (ϕ)	3
FREQUENCY (HZ)	60
FULL LOAD CURRENT (AMPS)	31 (VIF)
STARTING CURRENT (AMPS)	93 (VIF)
DISCONNECT CURRENT (AMPS)	40 (VIF)
LOCKED ROTOR (AMPS)	145 (VIF)
MOTOR POWER (HP)	20 (VIF)
CAB LIGHTING POWER REQUIREMENT	
VOLTAGE (V)	N/A
PHASE (ϕ)	N/A
FREQUENCY (HZ)	N/A
DISCONNECT CURRENT (AMPS)	N/A

HYDRAULIC INFORMATION

TOTAL GROSS LOAD (LBS) (APPROX.)	7439 (VIF)
POWER UNIT RATING (STARTS PER HOUR)	80
CYLINDER (IN.) (APPROX.)	8.625
PLUNGER (IN.) (APPROX.)	4.937
OIL SUPPLY LINE (IN.) (APPROX.)	2
NO LOAD (PSI) (APPROX.)	VIF
FULL LOAD (PSI) (APPROX.)	VIF
FULL WORKING LOAD PRESSURE (PSI) (APPROX.)	VIF
FLOW RATE (GPM) (APPROX.)	VIF
PUMP AND MOTOR TYPE	SUBMERSIBLE
PUMP MOTOR (HP) (APPROX.)	20 (VIF)
OIL COOLERS	NO

RAIL FORCES (R1 & R2)

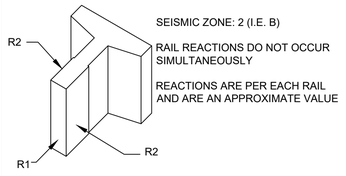

SEISMIC ZONE: 2 (I.E. B)

RAIL REACTIONS DO NOT OCCUR SIMULTANEOUSLY

REACTIONS ARE PER EACH RAIL AND ARE AN APPROXIMATE VALUE

EXISTING TO REMAIN AND TO BE VERIFIED IN FIELD			R1 (Fx-x)		R2 (Fy-y)	
			LBS.	KG.	LBS.	KG.
CAR	NON-SEISMIC	LOADING	137	LBS X .453	90	LBS X .453
		RUNNING	137	LBS X .453	90	LBS X .453
	SEISMIC		2111	LBS X .453	1056	LBS X .453

CAR BUFFER SUPPORT IMPACTS (R3)

PER EACH STAND (LBS) (APPROX.)	VIF
TOTAL (LBS) (APPROX.)	VIF

HYDRAULIC JACK IMPACTS (R4)

JACK REACTION ON PIT FLOOR (LBS)	VIF

HYDRAULIC ELEVATOR PIT DIAGRAM (R3 & R4)

SEISMIC ZONE: 4

BUFFER AND JACK REACTIONS DO NOT OCCUR SIMULTANEOUSLY

REACTIONS ARE PER EACH COMPONENT AND ARE AN APPROXIMATE VALUE

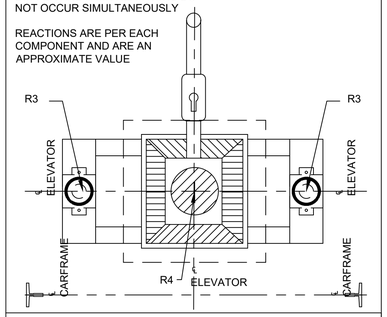

BRACKET SPACING

MAXIMUM BRACKET SPACING (FT. & IN.) (APPROX.)	EXISTING TO REMAIN (VIF)

PUMP/CONTROLLER ROOM

WEIGHT OF HYDRAULIC TANK (LBS.) (APPROX.)	VIF
WEIGHT OF PUMP	VIF
WEIGHT OF VALVE	VIF
OIL WEIGHT (LBS.) (APPROX.)	VIF
WEIGHT OF (1) 20 HP MOTOR (LBS.) (APPROX.)	VIF
MISCELLEANEOUS	VIF
TOTAL WEIGHT (LBS.) (APPROX.)	VIF

EXISTING TECHNICAL DATA

2500 INGROUND HYDRAULIC

GENERAL INFORMATION	REMARKS
SEISMIC CONDITIONING	EXISTING
ELEVATOR NO.(S)	30
CLASSIFICATION	PASSENGER
ELEVATOR TYPE	HYDRAULIC
CAPACITY (LBS.)	2500
SPEED (FPM)	60 (VIF)
JACK TYPE	INGROUND
OPERATION	SELECTIVE COLLECTIVE
TOTAL TRAVEL	19'-7" (VIF)
DOOR TYPE	TWO SPEED CENTER OPENING
DOOR SIZE (WIDTH AND HEIGHT)	3'-10" W X 7'-0" H.
LNDGS./OPNGS. (FRONT)	1
LNDGS./OPNGS. (REAR)	1
ADA COMPLIANT FOR WHEELCHAIR ACCESS AND NOMINAL TURNING RADIUS	YES
24" X 76" STRETCHER COMPLIANT (IBC 2000, IBC 2003)	NO
24" X 84" STRETCHER COMPLIANT (IBC 2006)	NO
24" X 84" STRETCHER COMPLIANT WITH NOT LESS THAN 5" RADIUS CORNERS (IBC 2009, IBC 2012)	NO

ELECTRICAL INFORMATION

MAINLINE POWER REQUIREMENT (STANDARD)	
VOLTAGE (V)	480
PHASE (ϕ)	3
FREQUENCY (HZ)	60
FULL LOAD CURRENT (AMPS)	35 (VIF)
STARTING CURRENT (AMPS)	105 (VIF)
DISCONNECT CURRENT (AMPS)	50 (VIF)
LOCKED ROTOR (AMPS)	183 (VIF)
MOTOR POWER (HP)	15 (VIF)
CAB LIGHTING POWER REQUIREMENT	
VOLTAGE (V)	N/A
PHASE (ϕ)	N/A
FREQUENCY (HZ)	N/A
DISCONNECT CURRENT (AMPS)	N/A

HYDRAULIC INFORMATION

TOTAL GROSS LOAD (LBS) (APPROX.)	8068 (VIF)
POWER UNIT RATING (STARTS PER HOUR)	80
CYLINDER (IN.) (APPROX.)	VIF
PLUNGER (IN.) (APPROX.)	VIF
OIL SUPPLY LINE (IN.) (APPROX.)	2
NO LOAD (PSI) (APPROX.)	VIF
FULL LOAD (PSI) (APPROX.)	VIF
FULL WORKING LOAD PRESSURE (PSI) (APPROX.)	VIF
FLOW RATE (GPM) (APPROX.)	VIF
PUMP AND MOTOR TYPE	SUBMERSIBLE
PUMP MOTOR (HP) (APPROX.)	15 (VIF)
OIL COOLERS	NO

RAIL FORCES (R1 & R2)

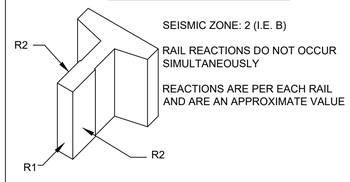

SEISMIC ZONE: 2 (I.E. B)

RAIL REACTIONS DO NOT OCCUR SIMULTANEOUSLY

REACTIONS ARE PER EACH RAIL AND ARE AN APPROXIMATE VALUE

EXISTING TO REMAIN AND TO BE VERIFIED IN FIELD			R1 (Fx-x)		R2 (Fy-y)	
			LBS.	KG.	LBS.	KG.
CAR	NON-SEISMIC	LOADING	139	LBS X .453	89	LBS X .453
		RUNNING	139	LBS X .453	89	LBS X .453
	SEISMIC		2350	LBS X .453	1175	LBS X .453

CAR BUFFER SUPPORT IMPACTS (R3)

PER EACH STAND (LBS) (APPROX.)	VIF
TOTAL (LBS) (APPROX.)	VIF

HYDRAULIC JACK IMPACTS (R4)

JACK REACTION ON PIT FLOOR (LBS)	VIF

HYDRAULIC ELEVATOR PIT DIAGRAM (R3 & R4)

SEISMIC ZONE: 4

BUFFER AND JACK REACTIONS DO NOT OCCUR SIMULTANEOUSLY

REACTIONS ARE PER EACH COMPONENT AND ARE AN APPROXIMATE VALUE

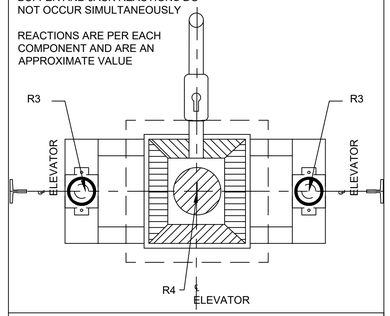

BRACKET SPACING

MAXIMUM BRACKET SPACING (FT. & IN.) (APPROX.)	EXISTING TO REMAIN (VIF)

PUMP/CONTROLLER ROOM

WEIGHT OF HYDRAULIC TANK (LBS.) (APPROX.)	VIF
WEIGHT OF PUMP	VIF
WEIGHT OF VALVE	VIF
OIL WEIGHT (LBS.) (APPROX.)	VIF
WEIGHT OF (1) 25 HP MOTOR (LBS.) (APPROX.)	VIF
MISCELLEANEOUS	VIF
TOTAL WEIGHT (LBS.) (APPROX.)	VIF

REV.	DATE	BY	SUB	APP.	DESCRIPTION
P	20260518				ISSUED FOR BID

DESIGNED: S. STEINER
DRAWN: J. ARNDT
CHECKED: S. STEINER
APPROVED: A. DEFRANCESCO
DATE: 20200916

REGISTERED PROFESSIONAL ENGINEER AARON C. KREISS S7022 5/8/2026 STRUCTURAL STATE OF CALIFORNIA

SAN FRANCISCO BAY AREA RAPID TRANSIT DISTRICT

GFT INC.

SUBMITTED

PGH WONG ENGINEERING, INC.

APPROVED

COLISEUM STATION ELEVATOR MODERNIZATION

EXISTING TECHNICAL DATA

CADD FILENAME: 15NL-140-X102
SIZE: D
SCALE: NONE
CONTRACT NO.: 15NL-140
REV.: P
CONTRACT SHEET NO.: X102
PAGE NO.: 074

PROPOSED TECHNICAL DATA

2500 INGROUND HYDRAULIC

GENERAL INFORMATION	REMARKS
SEISMIC CONDITIONING	TO BE DETERMINED
ELEVATOR NO.(S)	3
CLASSIFICATION	PASSENGER
ELEVATOR TYPE	HYDRAULIC
CAPACITY (LBS.)	2500
SPEED (FPM)	100
JACK TYPE	CANTILEVER INGROUND
OPERATION	SELECTIVE COLLECTIVE
TOTAL TRAVEL	25'-0"
DOOR TYPE	TWO SPEED CENTER OPENING
DOOR SIZE (WIDTH AND HEIGHT)	3'-6" W X 7'-0" H.
LNDGS./OPNGS. (FRONT)	2
LNDGS./OPNGS. (REAR)	0
ADA COMPLIANT FOR WHEELCHAIR ACCESS AND NOMINAL TURNING RADIUS	YES
24" X 76" STRETCHER COMPLIANT (IBC 2000, IBC 2003)	NO
24" X 84" STRETCHER COMPLIANT (IBC 2006)	NO
24" X 84" STRETCHER COMPLIANT WITH NOT LESS THAN 5" RADIUS CORNERS (IBC 2009, IBC 2012)	NO

ELECTRICAL INFORMATION

MAINLINE POWER REQUIREMENT (STANDARD)	
VOLTAGE (V)	480
PHASE (ϕ)	3
FREQUENCY (HZ)	60
FULL LOAD CURRENT (AMPS)	52
STARTING CURRENT (AMPS)	156
DISCONNECT CURRENT (AMPS)	80
LOCKED ROTOR (AMPS)	290
MOTOR POWER (HP)	40
CAB LIGHTING POWER REQUIREMENT	
VOLTAGE (V)	120
PHASE (ϕ)	1
FREQUENCY (HZ)	60
DISCONNECT CURRENT (AMPS)	30
CONTROLLER CABINET A/C POWER REQUIREMENT	
VOLTAGE (V)	120
PHASE (ϕ)	1
FREQUENCY (HZ)	60
DISCONNECT CURRENT (AMPS)	20

HYDRAULIC INFORMATION

TOTAL GROSS LOAD (LBS) (APPROX.)	7439
POWER UNIT RATING (STARTS PER HOUR)	120
CYLINDER (IN.) (APPROX.)	8.625
PLUNGER (IN.) (APPROX.)	5.437
OIL SUPPLY LINE (IN.) (APPROX.)	2
NO LOAD (PSI) (APPROX.)	212
FULL LOAD (PSI) (APPROX.)	321
FULL WORKING LOAD PRESSURE (PSI) (APPROX.)	370
FLOW RATE (GPM) (APPROX.)	121
PUMP AND MOTOR TYPE	SUBMERSIBLE
PUMP MOTOR (HP) (APPROX.)	40
OIL COOLERS	YES

RAIL FORCES (R1 & R2)

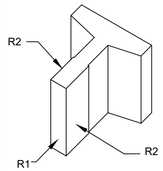

SEISMIC ZONE: 4

RAIL REACTIONS DO NOT OCCUR SIMULTANEOUSLY

REACTIONS ARE PER EACH RAIL AND ARE AN APPROXIMATE VALUE

NOTE: LOADS INDICATED ARE FOR REFERENCE ONLY, ACTUAL LOADS WILL BE PROVIDED BY THE ELEVATOR CONTRACTOR AND REVIEWED BY THE AUTHORITY.

EXISTING TO REMAIN AND TO BE VERIFIED IN FIELD			R1 (Fx-x)		R2 (Fy-y)	
			LBS.	KG.	LBS.	KG.
CAR	NON-SEISMIC	LOADING	137	LBS X .453	90	LBS X .453
		RUNNING	137	LBS X .453	90	LBS X .453
	SEISMIC		2111	LBS X .453	1056	LBS X .453

CAR BUFFER SUPPORT IMPACTS (R3)

PER SET OF STANDS (2) (LBS) (APPROX.)	7786
TOTAL (4 STANDS) (LBS) (APPROX.)	15572

HYDRAULIC JACK IMPACTS (R4)

JACK REACTION ON PIT FLOOR (LBS)	8809

HYDRAULIC ELEVATOR PIT DIAGRAM

(R3 & R4)

SEISMIC ZONE: 4

BUFFER AND JACK REACTIONS DO NOT OCCUR SIMULTANEOUSLY

REACTIONS ARE PER EACH COMPONENT AND ARE AN APPROXIMATE VALUE

NOTE: LOADS INDICATED ARE FOR REFERENCE ONLY, ACTUAL LOADS WILL BE PROVIDED BY THE ELEVATOR CONTRACTOR AND REVIEWED BY THE AUTHORITY.

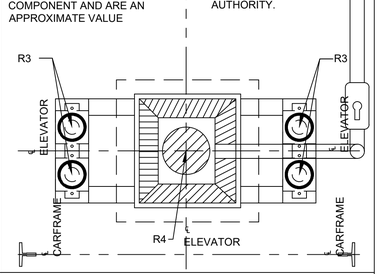

BRACKET SPACING

MAXIMUM BRACKET SPACING (FT. & IN.) (APPROX.)	VERIFY IN FIELD

PUMP/CONTROLLER ROOM

WEIGHT OF HYDRAULIC TANK (LBS.) (APPROX.)	400
WEIGHT OF PUMP	100
WEIGHT OF VALVE	28
OIL WEIGHT (LBS.) (APPROX.)	880
WEIGHT OF (1) 40 HP MOTOR (LBS.) (APPROX.)	140
MISCELLEANEOUS	100
TOTAL WEIGHT (LBS.) (APPROX.)	1828

PROPOSED TECHNICAL DATA

2500 INGROUND HYDRAULIC

GENERAL INFORMATION	REMARKS
SEISMIC CONDITIONING	TO BE DETERMINED
ELEVATOR NO.(S)	30
CLASSIFICATION	PASSENGER
ELEVATOR TYPE	HYDRAULIC
CAPACITY (LBS.)	2500
SPEED (FPM)	100
JACK TYPE	INGROUND
OPERATION	SELECTIVE COLLECTIVE
TOTAL TRAVEL	19'-7"
DOOR TYPE	TWO SPEED CENTER OPENING
DOOR SIZE (WIDTH AND HEIGHT)	3'-10" W X 7'-0" H.
LNDGS./OPNGS. (FRONT)	1
LNDGS./OPNGS. (REAR)	1
ADA COMPLIANT FOR WHEELCHAIR ACCESS AND NOMINAL TURNING RADIUS	YES
24" X 76" STRETCHER COMPLIANT (IBC 2000, IBC 2003)	NO
24" X 84" STRETCHER COMPLIANT (IBC 2006)	NO
24" X 84" STRETCHER COMPLIANT WITH NOT LESS THAN 5" RADIUS CORNERS (IBC 2009, IBC 2012)	NO

ELECTRICAL INFORMATION

MAINLINE POWER REQUIREMENT (STANDARD)	
VOLTAGE (V)	480
PHASE (ϕ)	3
FREQUENCY (HZ)	60
FULL LOAD CURRENT (AMPS)	52
STARTING CURRENT (AMPS)	156
DISCONNECT CURRENT (AMPS)	80
LOCKED ROTOR (AMPS)	290
MOTOR POWER (HP)	40
CAB LIGHTING POWER REQUIREMENT	
VOLTAGE (V)	120
PHASE (ϕ)	1
FREQUENCY (HZ)	60
DISCONNECT CURRENT (AMPS)	30
CONTROLLER CABINET A/C POWER REQUIREMENT	
VOLTAGE (V)	120
PHASE (ϕ)	1
FREQUENCY (HZ)	60
DISCONNECT CURRENT (AMPS)	20

HYDRAULIC INFORMATION

TOTAL GROSS LOAD (LBS) (APPROX.)	8068
POWER UNIT RATING (STARTS PER HOUR)	120
CYLINDER (IN.) (APPROX.)	8.625
PLUNGER (IN.) (APPROX.)	5.437
OIL SUPPLY LINE (IN.) (APPROX.)	2
NO LOAD (PSI) (APPROX.)	239
FULL LOAD (PSI) (APPROX.)	348
FULL WORKING LOAD PRESSURE (PSI) (APPROX.)	401
FLOW RATE (GPM) (APPROX.)	144
PUMP AND MOTOR TYPE	SUBMERSIBLE
PUMP MOTOR (HP) (APPROX.)	40
OIL COOLERS	YES

RAIL FORCES (R1 & R2)

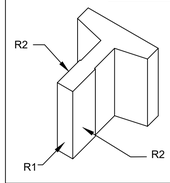

SEISMIC ZONE: 4

RAIL REACTIONS DO NOT OCCUR SIMULTANEOUSLY

REACTIONS ARE PER EACH RAIL AND ARE AN APPROXIMATE VALUE

NOTE: LOADS INDICATED ARE FOR REFERENCE ONLY, ACTUAL LOADS WILL BE PROVIDED BY THE ELEVATOR CONTRACTOR AND REVIEWED BY THE AUTHORITY.

EXISTING TO REMAIN AND TO BE VERIFIED IN FIELD			R1 (Fx-x)		R2 (Fy-y)	
			LBS.	KG.	LBS.	KG.
CAR	NON-SEISMIC	LOADING	139	LBS X .453	89	LBS X .453
		RUNNING	139	LBS X .453	89	LBS X .453
	SEISMIC		2350	LBS X .453	1175	LBS X .453

CAR BUFFER SUPPORT IMPACTS (R3)

PER EACH STAND (LBS) (APPROX.)	8737
TOTAL (LBS) (APPROX.)	17474

HYDRAULIC JACK IMPACTS (R4)

JACK REACTION ON PIT FLOOR (LBS)	9155

HYDRAULIC ELEVATOR PIT DIAGRAM

(R3 & R4)

SEISMIC ZONE: 4

BUFFER AND JACK REACTIONS DO NOT OCCUR SIMULTANEOUSLY

REACTIONS ARE PER EACH COMPONENT AND ARE AN APPROXIMATE VALUE

NOTE: LOADS INDICATED ARE FOR REFERENCE ONLY, ACTUAL LOADS WILL BE PROVIDED BY THE ELEVATOR CONTRACTOR AND REVIEWED BY THE AUTHORITY.

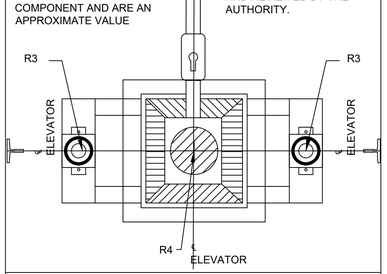

BRACKET SPACING

MAXIMUM BRACKET SPACING (FT. & IN.) (APPROX.)	VERIFY IN FIELD

PUMP/CONTROLLER ROOM

WEIGHT OF HYDRAULIC TANK (LBS.) (APPROX.)	270
WEIGHT OF PUMP	100
WEIGHT OF VALVE	28
OIL WEIGHT (LBS.) (APPROX.)	440
WEIGHT OF (1) 40 HP MOTOR (LBS.) (APPROX.)	140
MISCELLEANEOUS	100
TOTAL WEIGHT (LBS.) (APPROX.)	1078

PROPOSED ELEVATOR #3

HEATING AND VENTILATION

	MINIMUM	MAXIMUM
TANK, PUMP, MOTOR HEATING OUTPUT (BTU'S/HR) APPROX.	25246	29033
HYDRAULIC OIL COOLER HEATING OUTPUT (BTU'S/HR) APPROX.	746	1242
CONTROLLER WITH STARTER HEATING OUTPUT (BTU'S/HR) APPROX.	5000	6000
TOTAL HEATING OUTPUT (BTU'S/HR) APPROX.	30992	36275

BTU'S/HOUR SHOWN ARE PER EACH ELEVATOR. MACHINE/CONTROLLER ROOM TEMPERATURE TO BE MAINTAINED BETWEEN 55 TO 100 DEGREES FAHRENHEIT. RELATIVE HUMIDITY TO BE MAINTAINED AT 95% OR LESS NON-CONDENSING. MACHINE ROOMS SHALL BE PROVIDED WITH NATURAL OR MECHANICAL MEANS TO KEEP THE AMBIENT AIR TEMPERATURE AND HUMIDITY IN THE RANGE SHOWN TO ENSURE NORMAL OPERATION OF THE ELEVATOR. THE TEMPERATURE AND HUMIDITY RANGE SHALL BE PERMANENTLY POSTED IN THE MACHINE ROOM.

PROPOSED ELEVATOR #30

HEATING AND VENTILATION

	MINIMUM	MAXIMUM
TANK, PUMP, MOTOR HEATING OUTPUT (BTU'S/HR) APPROX.	25246	29033
HYDRAULIC OIL COOLER HEATING OUTPUT (BTU'S/HR) APPROX.	746	1242
CONTROLLER WITH STARTER HEATING OUTPUT (BTU'S/HR) APPROX.	5000	6000
TOTAL HEATING OUTPUT (BTU'S/HR) APPROX.	30992	36275

BTU'S/HOUR SHOWN ARE PER EACH ELEVATOR. MACHINE/CONTROLLER ROOM TEMPERATURE TO BE MAINTAINED BETWEEN 55 TO 100 DEGREES FAHRENHEIT. RELATIVE HUMIDITY TO BE MAINTAINED AT 95% OR LESS NON-CONDENSING. MACHINE ROOMS SHALL BE PROVIDED WITH NATURAL OR MECHANICAL MEANS TO KEEP THE AMBIENT AIR TEMPERATURE AND HUMIDITY IN THE RANGE SHOWN TO ENSURE NORMAL OPERATION OF THE ELEVATOR. THE TEMPERATURE AND HUMIDITY RANGE SHALL BE PERMANENTLY POSTED IN THE MACHINE ROOM.

REV.	DATE	BY	SUB	APP.	DESCRIPTION
P	20260518				ISSUED FOR BID

DESIGNED: S. STEINER
DRAWN: J. ARNDT
CHECKED: S. STEINER
APPROVED: A. DEFRANCESCO
DATE: 20200916

REGISTERED PROFESSIONAL ENGINEER AARON C. KREBS S7022 5/8/2026 STRUCTURAL STATE OF CALIFORNIA

SAN FRANCISCO BAY AREA RAPID TRANSIT DISTRICT

GFT INC. — SUBMITTED

PGH WONG ENGINEERING, INC. — APPROVED

COLISEUM STATION ELEVATOR MODERNIZATION

PROPOSED TECHNICAL DATA

CADD FILENAME: 15NL-140-X103
SIZE: D | SCALE: NONE
CONTRACT NO.: 15NL-140 | REV.: P
CONTRACT SHEET NO.: X103 | PAGE NO.: 075

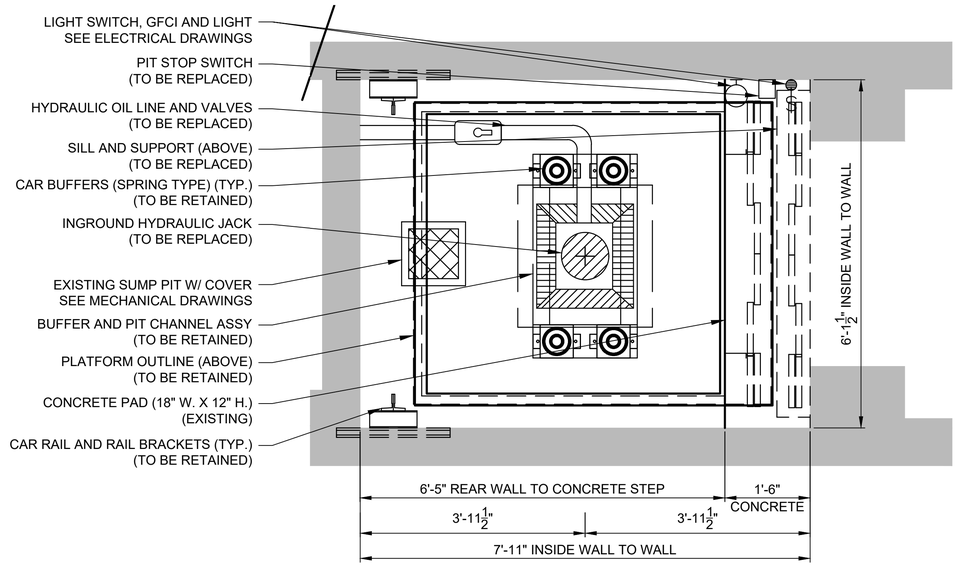

ELEVATOR 3 - EXISTING PIT PLAN

SCALE: 3/4" = 1'-0"

1 VT104

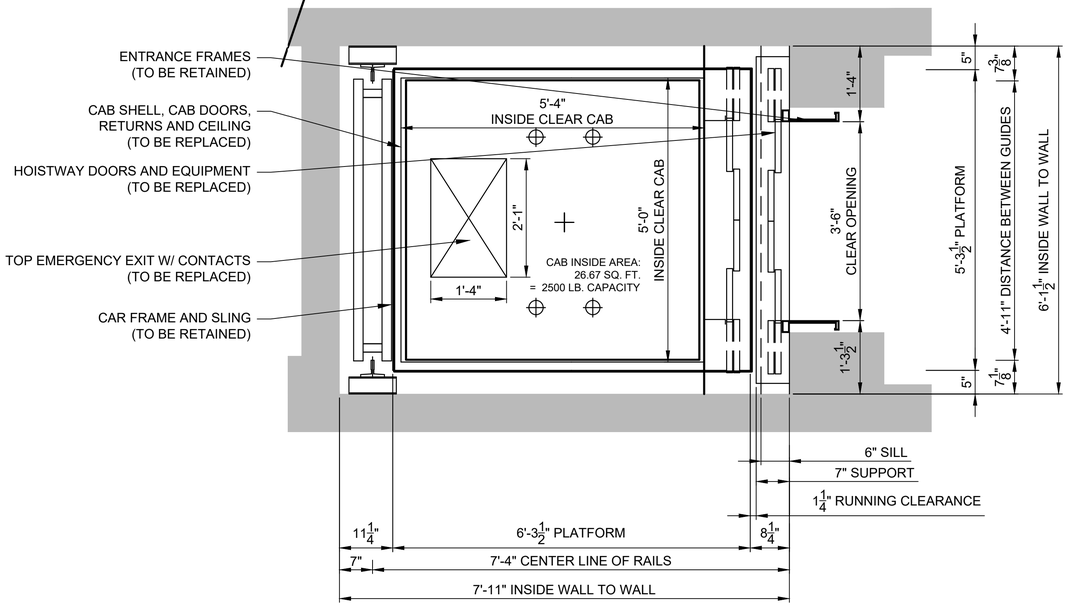

ELEVATOR 3 - EXISTING HOISTWAY PLAN

SCALE: 3/4" = 1'-0"

2 VT104

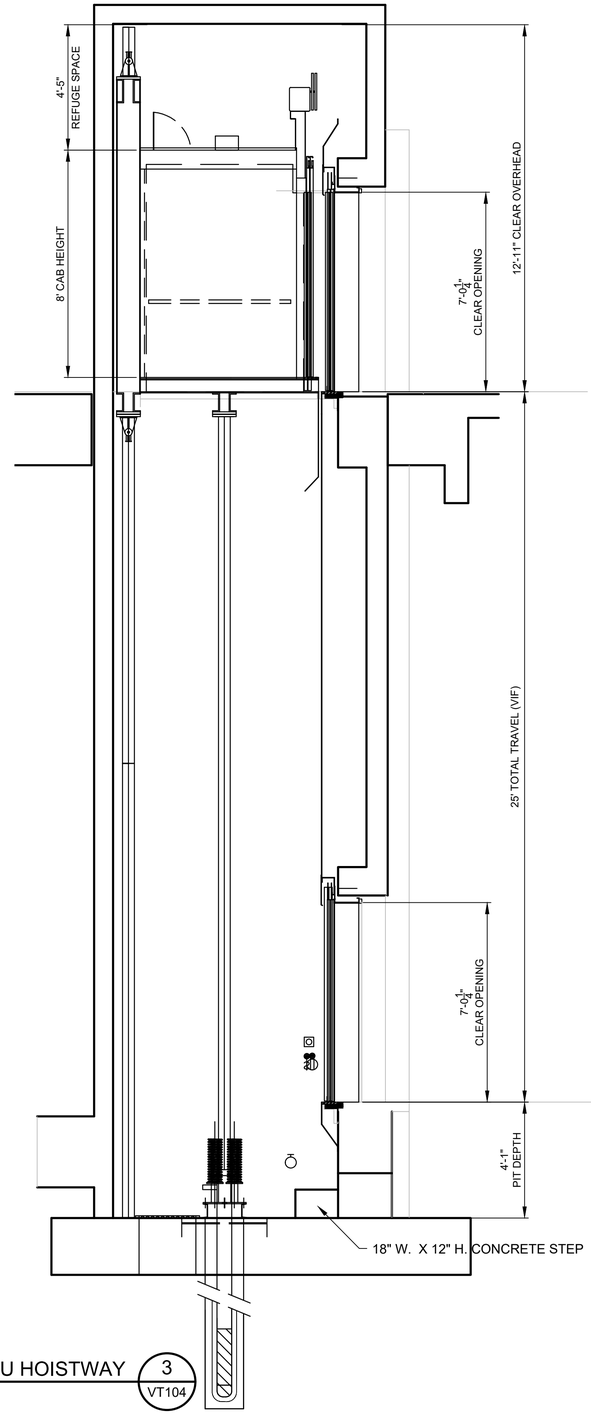

ELEVATOR 3 - EXISTING SECTION THRU HOISTWAY

SCALE: 3/8" = 1'-0"

3 VT104

REV.	DATE	BY	SUB	APP.	DESCRIPTION
P	20260518				ISSUED FOR BID

DESIGNED: S. STEINER
DRAWN: J. ARNDT
CHECKED: S. STEINER
APPROVED: A. DEFRANCESCO
DATE: 20200916

REGISTERED PROFESSIONAL ENGINEER — AARON C. KREBS — S7022 — 5/8/2026 — STRUCTURAL — STATE OF CALIFORNIA

SAN FRANCISCO BAY AREA RAPID TRANSIT DISTRICT

GFT INC. — SUBMITTED

PGH WONG ENGINEERING, INC. — APPROVED

COLISEUM STATION ELEVATOR MODERNIZATION

ELEVATOR 3 - EXISTING PLANS AND SECTION

CADD FILENAME: 15NL-140-X104
SIZE: D | SCALE: AS SHOWN
CONTRACT NO.: 15NL-140 | REV.: P
CONTRACT SHEET NO.: X104 | PAGE NO.: 076

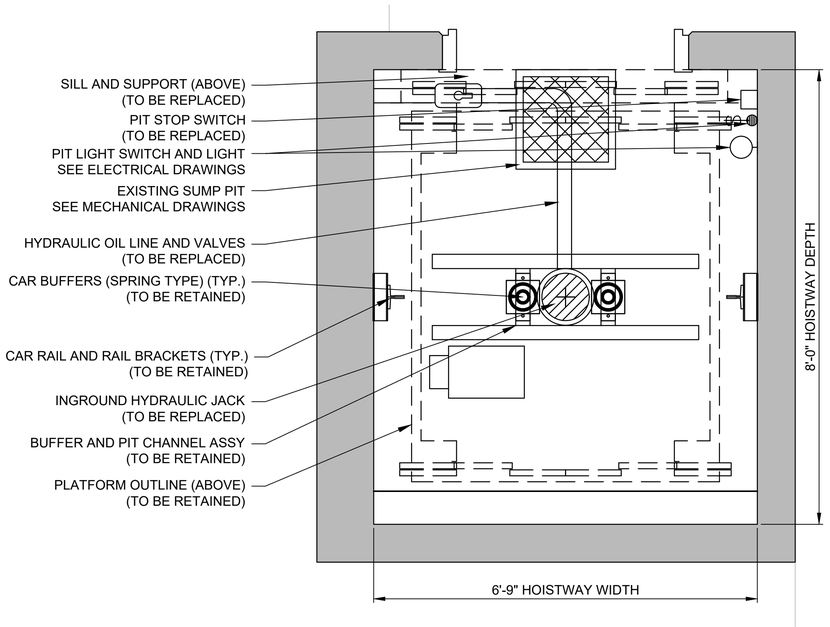

ELEVATOR 30 - EXISTING PIT PLAN (1 / VT105)
SCALE: 3/4" = 1'-0"

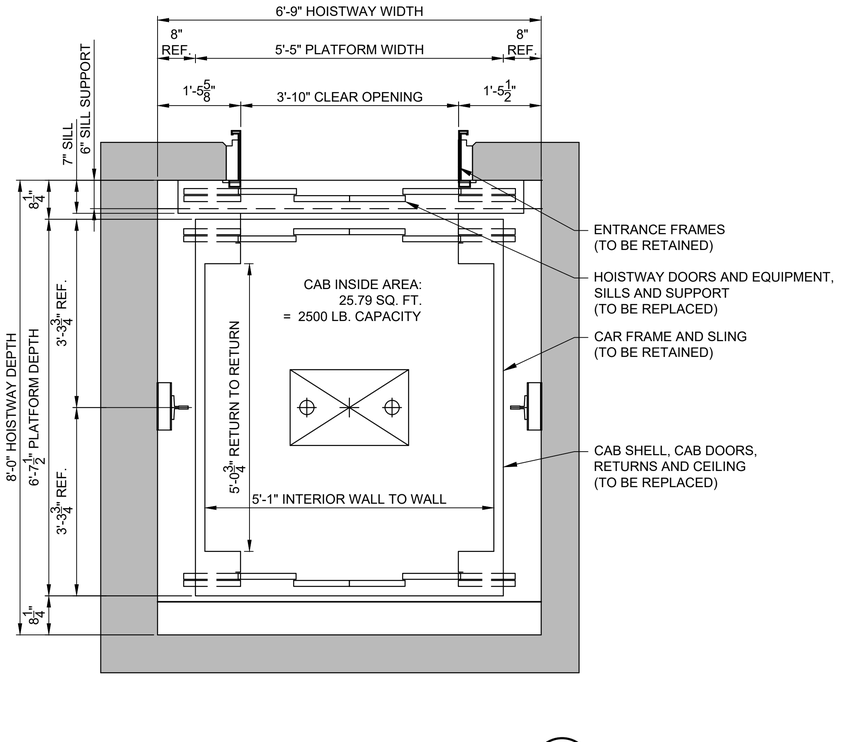

ELEVATOR 30 - EXISTING CONCOURSE LEVEL PLAN (2 / VT105)
SCALE: 3/4" = 1'-0"

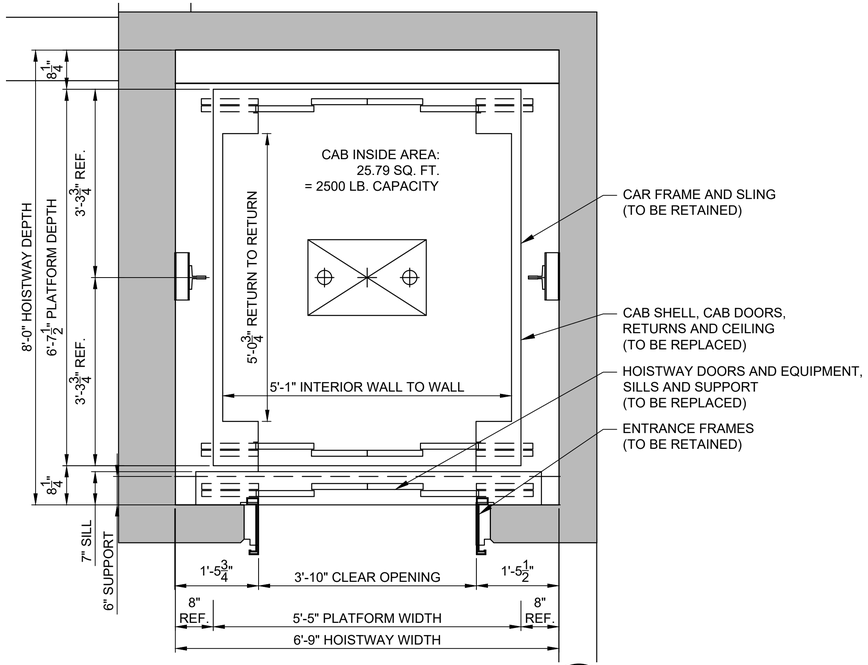

ELEVATOR 30 - EXISTING WALKWAY LEVEL PLAN (3 / VT105)
SCALE: 3/4" = 1'-0"

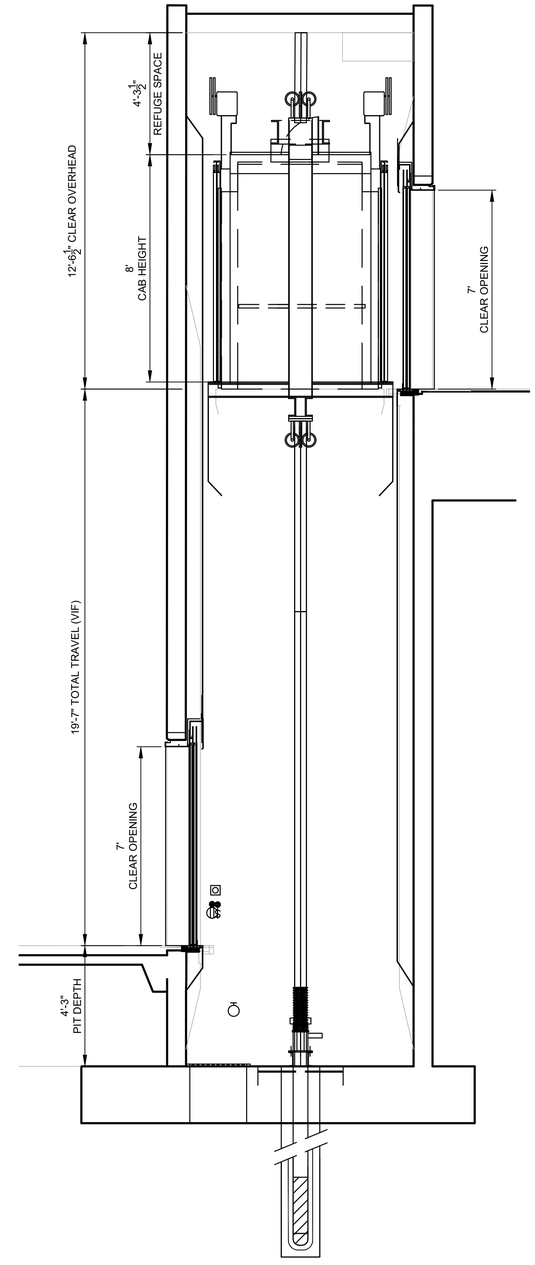

ELEVATOR 30 - EXISTING SECTION THRU HOISTWAY (4 / VT105)
SCALE: 3/8" = 1'-0"

REV.	DATE	BY	SUB.	APP.	DESCRIPTION
P	20260518				ISSUED FOR BID

DESIGNED: S. STEINER
DRAWN: J. ARNDT
CHECKED: S. STEINER
APPROVED: A. DEFRANCESCO
DATE: 20200916

REGISTERED PROFESSIONAL ENGINEER — AARON C. KRESS — S7022 — 5/8/2026 — STRUCTURAL — STATE OF CALIFORNIA

SAN FRANCISCO BAY AREA RAPID TRANSIT DISTRICT

GFT INC. — SUBMITTED
PGH WONG ENGINEERING, INC. — APPROVED

COLISEUM STATION ELEVATOR MODERNIZATION

ELEVATOR 30 - EXISTING PLANS AND SECTION

CADD FILENAME: 15NL-140-X105
SIZE: D | SCALE: AS SHOWN
CONTRACT NO.: 15NL-140 | REV.: P
CONTRACT SHEET NO.: X105 | PAGE NO.: 077

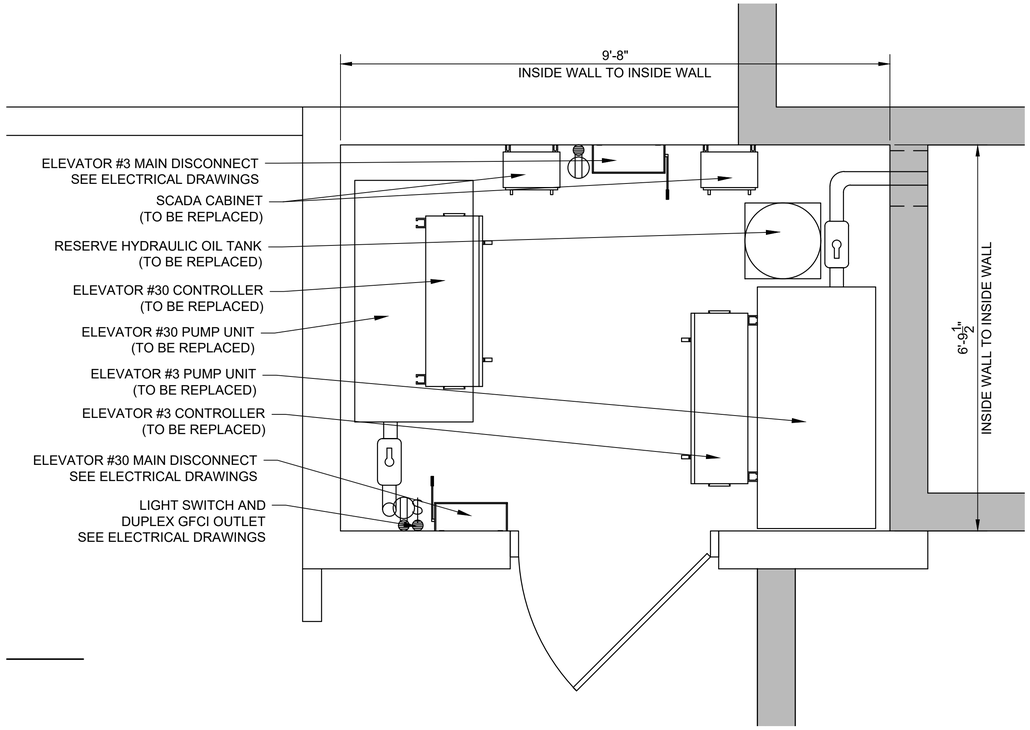

EXISTING ELEVATOR MACHINE ROOM PLAN

SCALE: 3/4" = 1'-0"

1
VT106

NOTE: EXISTING MACHINE ROOM WILL NOT SERVE AS NEW MACHINE ROOM SPACE. NEW EQUIPMENT WILL BE PLACED IN NEW MACHINE ROOM SPACE.

REV.	DATE	BY	SUB	APP.	DESCRIPTION
P	20260518				ISSUED FOR BID

DESIGNED: S. STEINER
DRAWN: J. ARNDT
CHECKED: S. STEINER
APPROVED: A. DEFRANCESCO
DATE: 20200916

REGISTERED PROFESSIONAL ENGINEER AARON C. KREGE S7022 5/8/2026 STRUCTURAL STATE OF CALIFORNIA

SAN FRANCISCO BAY AREA RAPID TRANSIT DISTRICT

GFT INC. — SUBMITTED

PGH WONG ENGINEERING, INC. — APPROVED

COLISEUM STATION ELEVATOR MODERNIZATION

EXISTING ELEVATOR MACHINE ROOM PLAN

CADD FILENAME: 15NL-140-X106
SIZE: D | SCALE: 3/4" = 1'-0"
CONTRACT NO.: 15NL-140 | REV.: P
CONTRACT SHEET NO.: X106 | PAGE NO.: 078

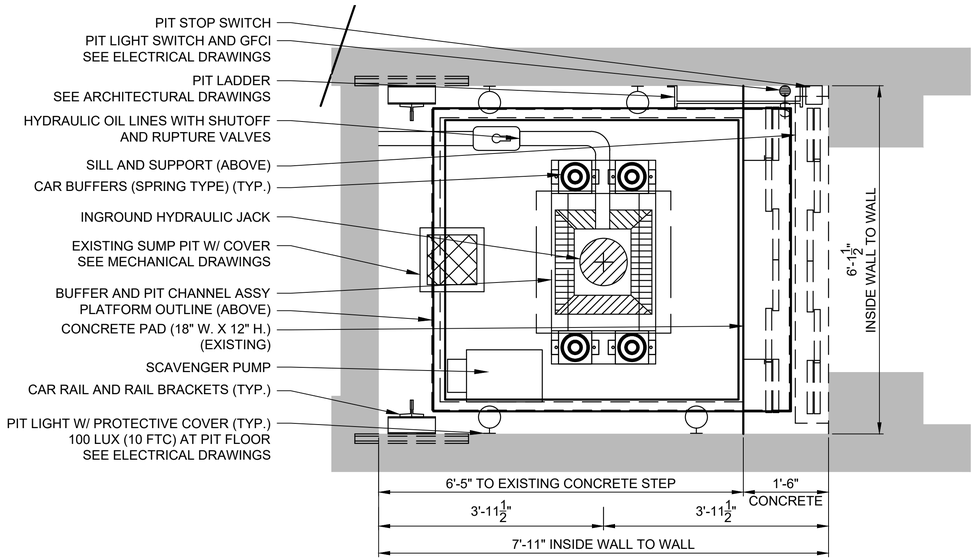

ELEVATOR 3 - PROPOSED PIT PLAN (1 / VT107)
SCALE: 3/4" = 1'-0"

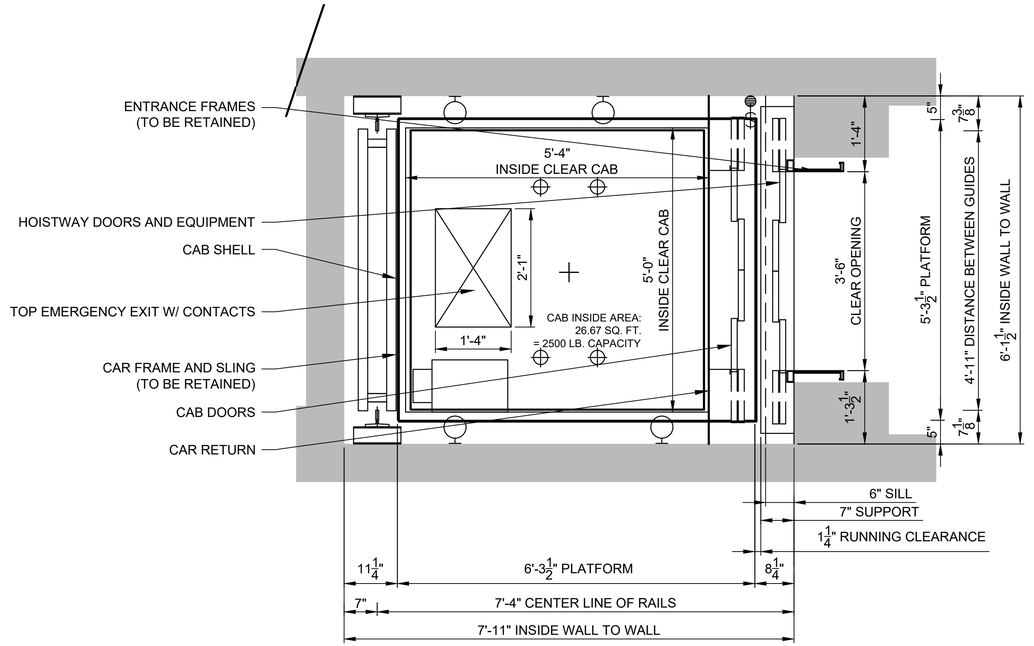

ELEVATOR 3 - PROPOSED HOISTWAY PLAN (2 / VT107)
SCALE: 3/4" = 1'-0"

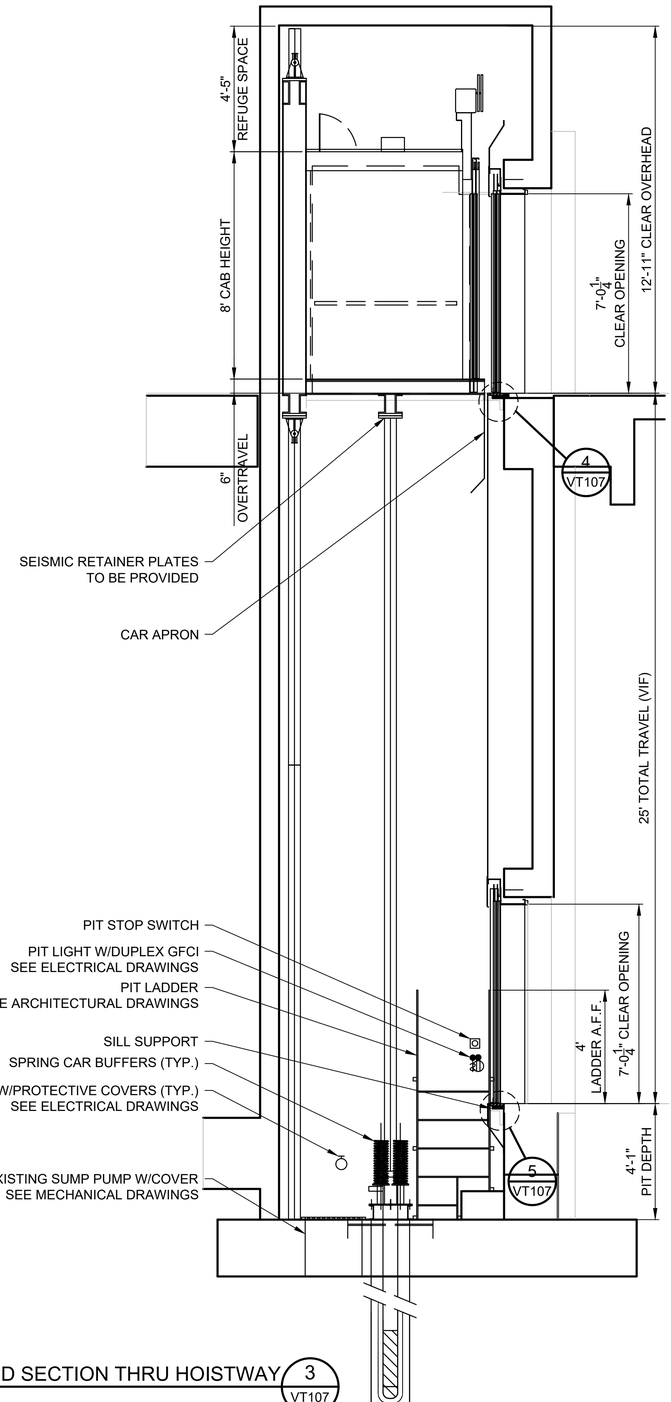

ELEVATOR 3 - PROPOSED SECTION THRU HOISTWAY (3 / VT107)
SCALE: 3/8" = 1'-0"

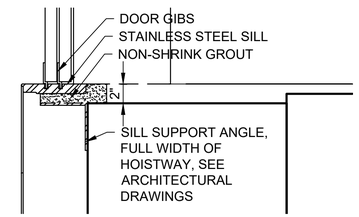

SILL DETAIL - PLATFORM LEVEL (4 / VT107)
SCALE: 1-1/2" = 1'-0"

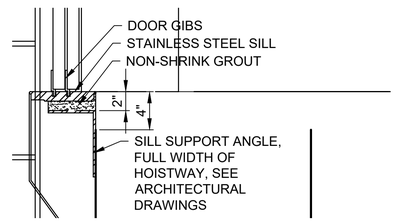

SILL DETAIL - CONCOURSE LEVEL (5 / VT107)
SCALE: 1-1/2" = 1'-0"

REV.	DATE	BY	SUB.	APP.	DESCRIPTION
P	20260518				ISSUED FOR BID

DESIGNED: S. STEINER
DRAWN: J. ARNDT
CHECKED: S. STEINER
APPROVED: A. DEFRANCESCO
DATE: 20200916

REGISTERED PROFESSIONAL ENGINEER — JASON C. KRIEGER — S7022 — 5/8/2026 — STRUCTURAL — STATE OF CALIFORNIA

SAN FRANCISCO BAY AREA RAPID TRANSIT DISTRICT

GFT INC. — SUBMITTED

PGH WONG ENGINEERING, INC. — APPROVED

COLISEUM STATION ELEVATOR MODERNIZATION

ELEVATOR 3 - PROPOSED PLANS AND SECTION

CADD FILENAME: 15NL-140-X107
SIZE: D | SCALE: AS SHOWN
CONTRACT NO.: 15NL-140 | REV.: P
CONTRACT SHEET NO.: X107 | PAGE NO.: 079

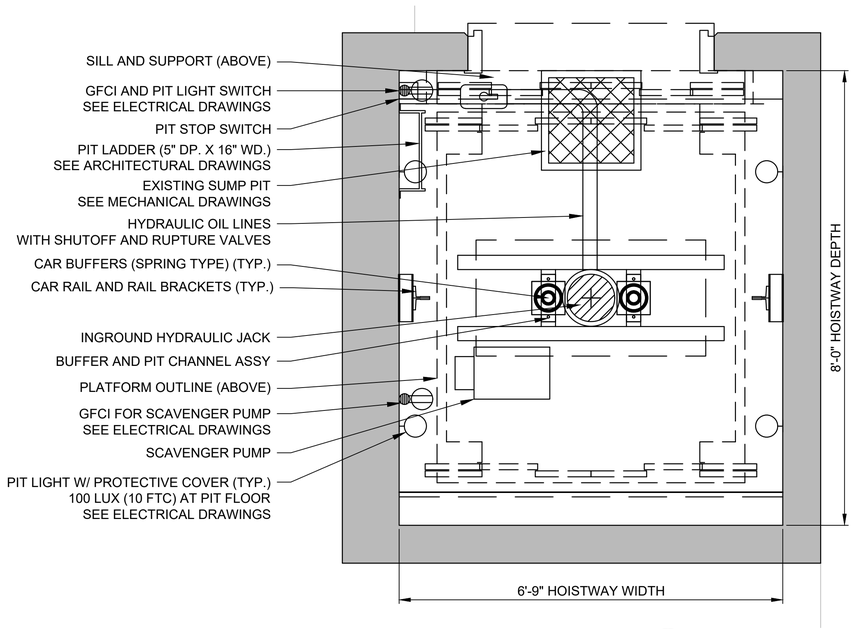

ELEVATOR 30 - PROPOSED PIT PLAN (1 / VT108)
SCALE: 3/4" = 1'-0"

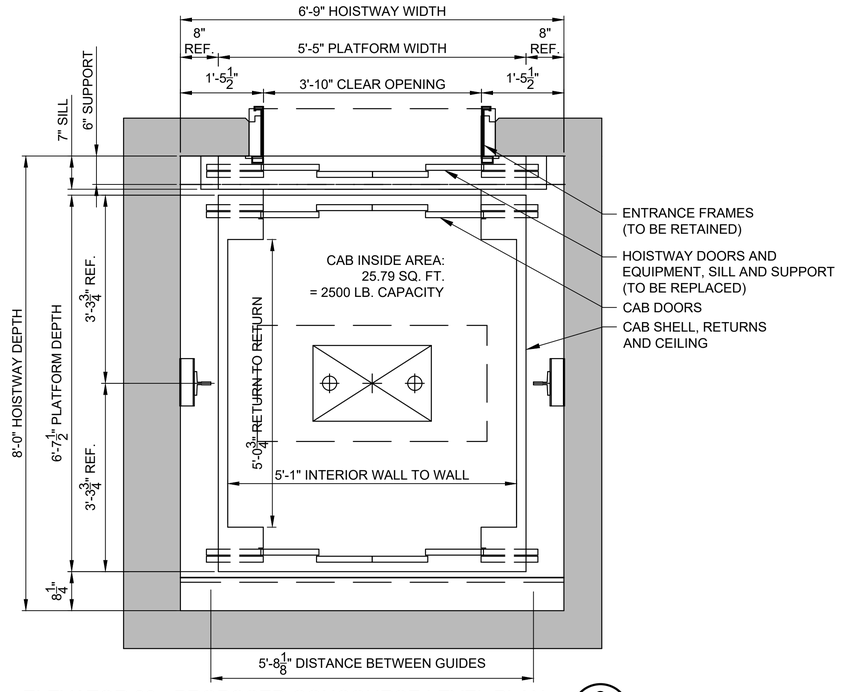

ELEVATOR 30 - PROPOSED CONCOURSE LEVEL PLAN (2 / VT108)
SCALE: 3/4" = 1'-0"

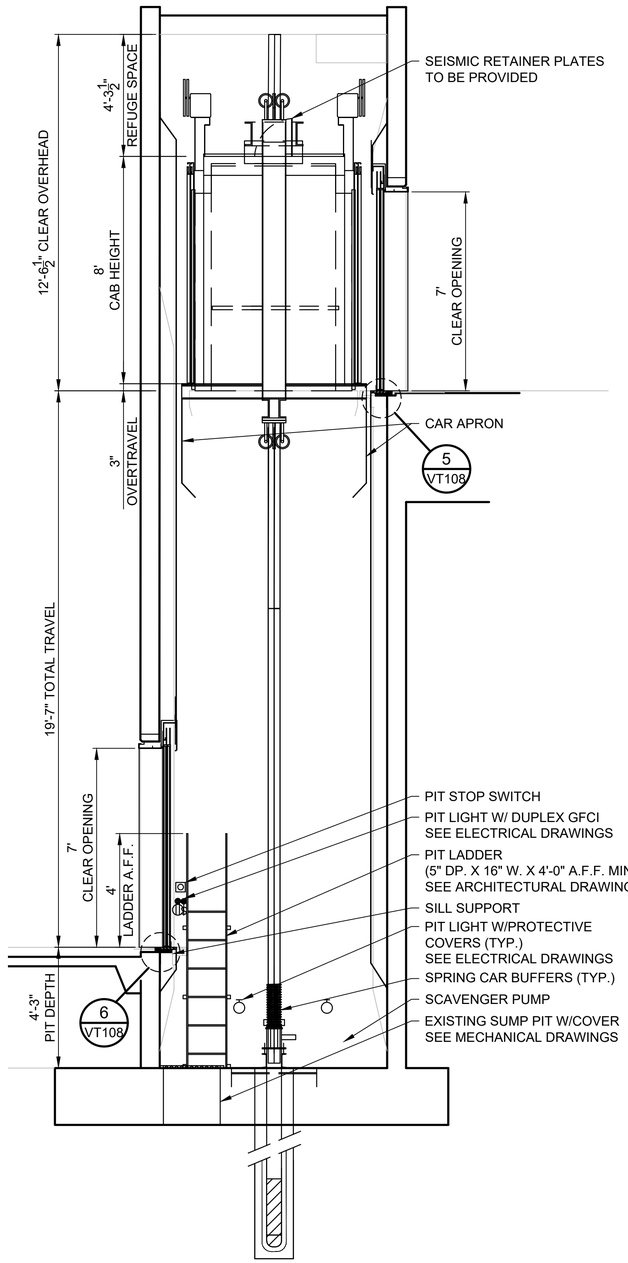

ELEVATOR 30 - PROPOSED SECTION THRU HOISTWAY (4 / VT108)
SCALE: 3/8" = 1'-0"

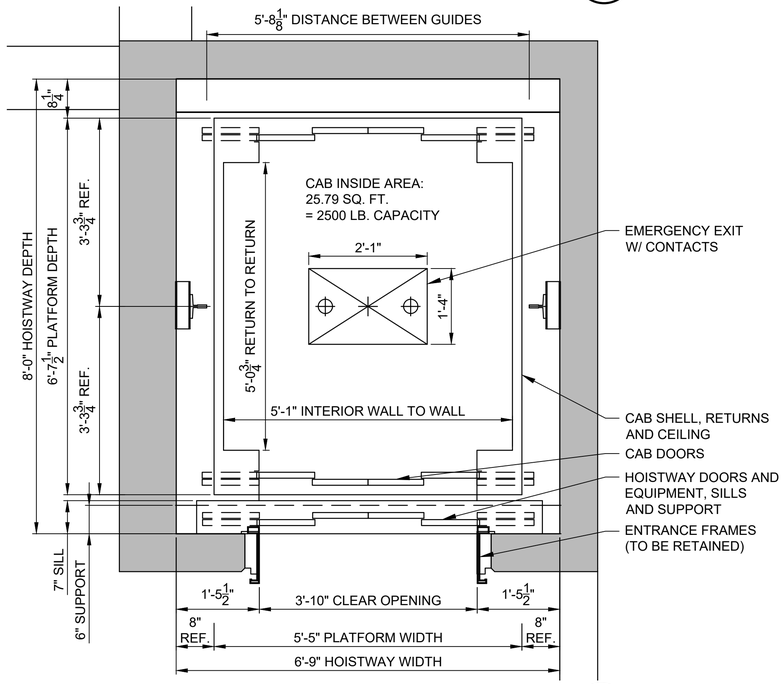

ELEVATOR 30 - PROPOSED WALKWAY LEVEL PLAN (3 / VT108)
SCALE: 3/4" = 1'-0"

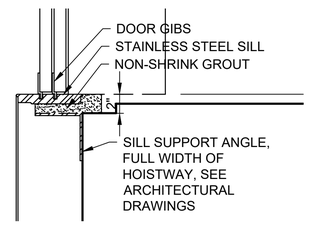

SILL DETAIL - WALKWAY LEVEL (5 / VT108)
SCALE: 1-1/2" = 1'-0"

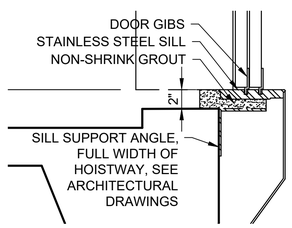

SILL DETAIL - CONCOURSE LEVEL (6 / VT108)
SCALE: 1-1/2" = 1'-0"

REV.	DATE	BY	SUB	APP.	DESCRIPTION
P	20260518				ISSUED FOR BID

DESIGNED: S. STEINER
DRAWN: J. ARNDT
CHECKED: S. STEINER
APPROVED: A. DEFRANCESCO
DATE: 20200916

REGISTERED PROFESSIONAL ENGINEER — AARON C. KREBS — S7022 — 5/8/2026 — STRUCTURAL — STATE OF CALIFORNIA

SAN FRANCISCO BAY AREA RAPID TRANSIT DISTRICT

GFT INC. — SUBMITTED

PGH WONG ENGINEERING, INC. — APPROVED

COLISEUM STATION ELEVATOR MODERNIZATION

ELEVATOR 30 - PROPOSED PLANS AND SECTION

CADD FILENAME: 15NL-140-X108
SIZE: D | SCALE: AS SHOWN
CONTRACT NO.: 15NL-140 | REV.: P
CONTRACT SHEET NO.: X108 | PAGE NO.: 080

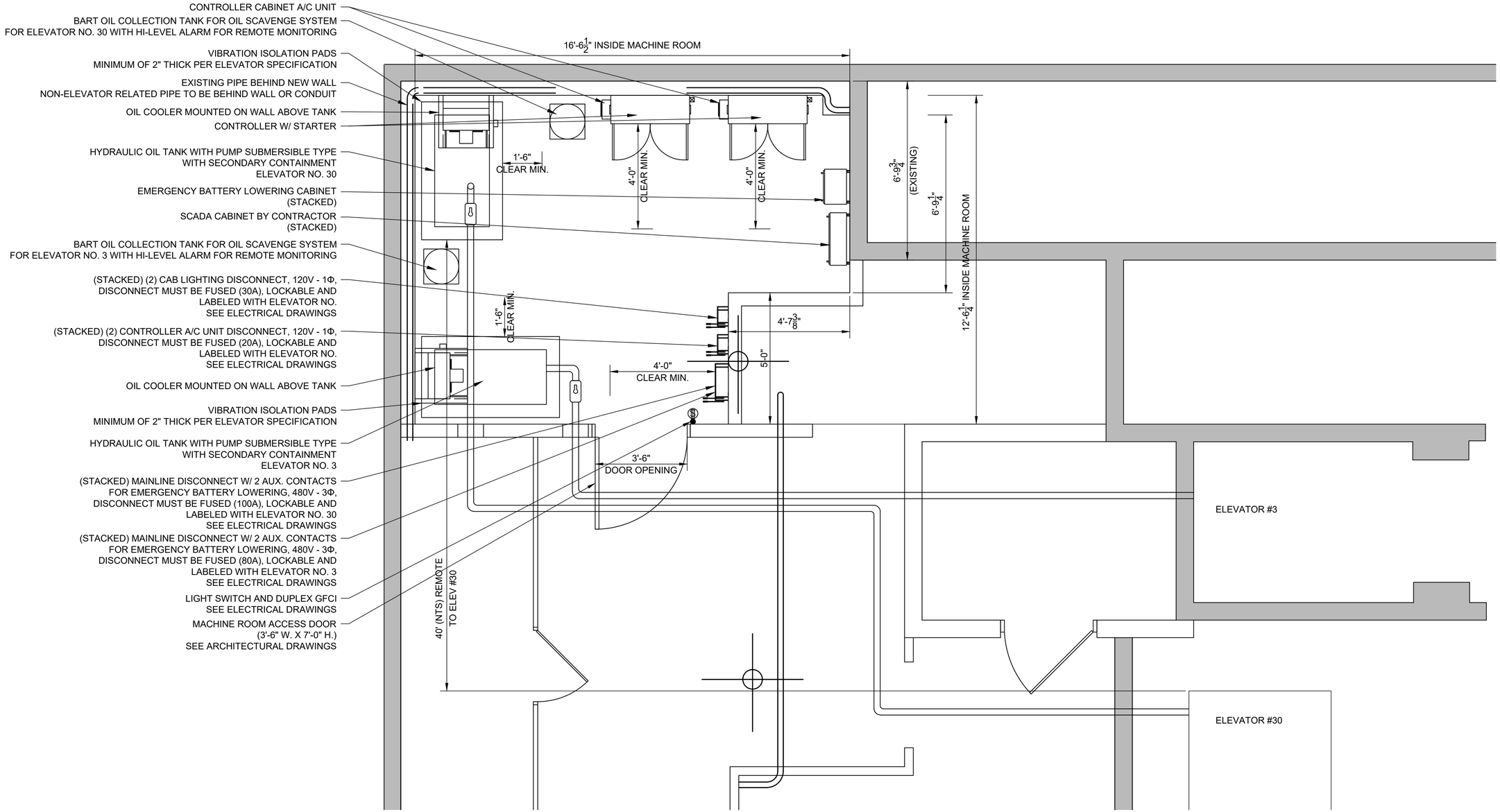

PROPOSED ELEVATOR MACHINE ROOM PLAN — 1 / VT109

SCALE: 1/2" = 1'-0"

REV.	DATE	BY	SUB	APP.	DESCRIPTION
P	20260518				ISSUED FOR BID

DESIGNED: S. STEINER
DRAWN: J. ARNDT
CHECKED: S. STEINER
APPROVED: A. DEFRANCESCO
DATE: 20200916

REGISTERED PROFESSIONAL ENGINEER — AARON C. KREISS — S7022 — 5/8/2026 — STRUCTURAL — STATE OF CALIFORNIA

SAN FRANCISCO BAY AREA RAPID TRANSIT DISTRICT

GFT INC. — SUBMITTED

PGH WONG ENGINEERING, INC. — APPROVED

COLISEUM STATION ELEVATOR MODERNIZATION

ELEVATOR MACHINE ROOM PLAN

CADD FILENAME: 15NL-140-X109
SIZE: D | SCALE: 1/2" = 1'-0"
CONTRACT NO.: 15NL-140 | REV.: P
CONTRACT SHEET NO.: X109 | PAGE NO.: 081

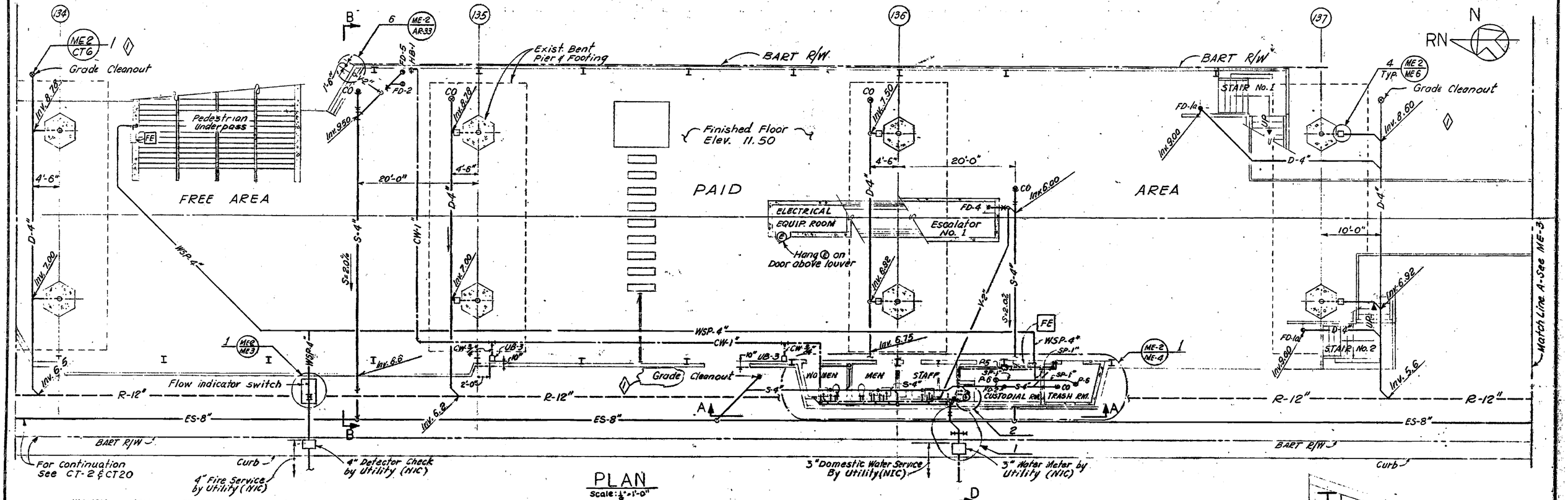

PLAN
Scale: 1/8"=1'-0"

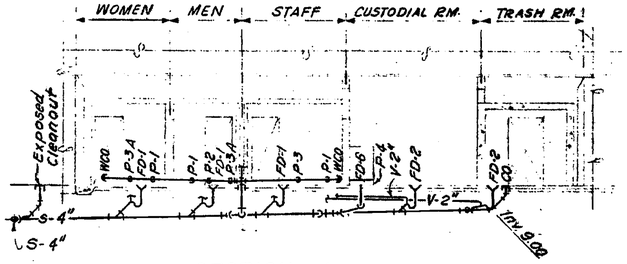

SECTION - A
Scale: 1/8"=1'-0"

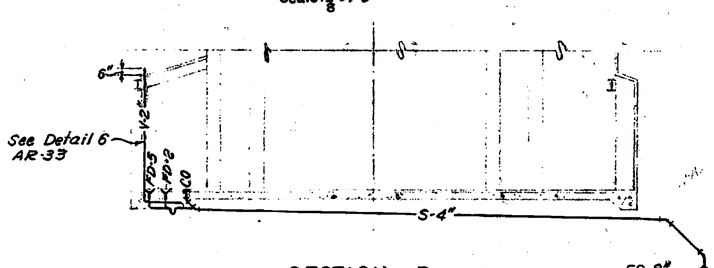

SECTION - B
Scale: 1/8"=1'-0"

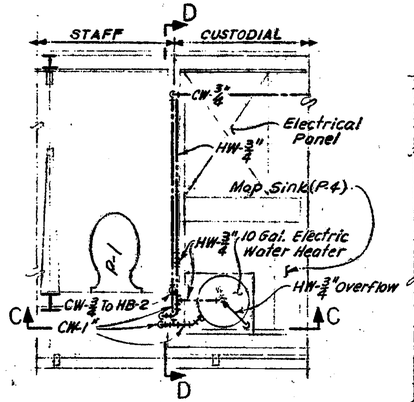

PLAN DETAIL-2
AT WATER HEATER LEVEL
Scale: 1/2"=1'-0"

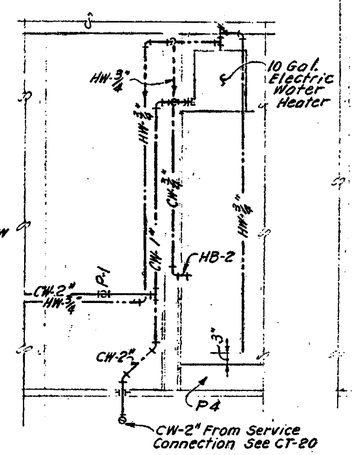

SECTION - C
Scale: 1/2"=1'-0"

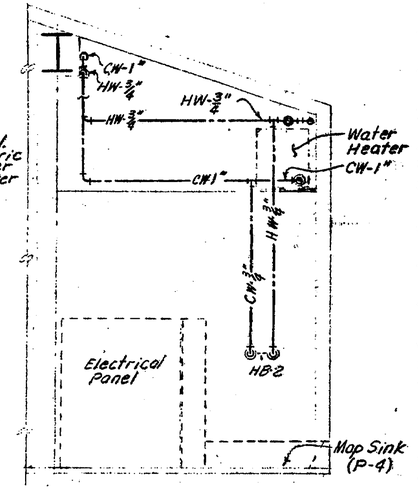

SECTION - D
Scale: 1/2"=1'-0"

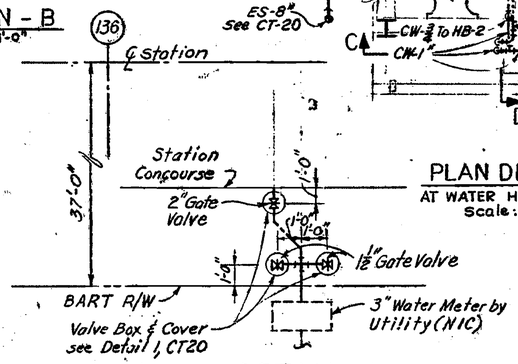

DETAIL 1
Scale: None

SHEET NO.	TITLE	SHEET NO.	TITLE
		EE12	Grounding Plan
		EE 7	Concourse Area Auxiliary Systems
		EE 6	Under Floor Ducts & 480 V Power
		EE 5	Concourse Area Lighting
		EE 4	Concourse Area Lighting
		SE 4	Concourse Area (136-138) Ground Floor Plan
		SE 3	Concourse Area (134-136) Ground Floor Plan
EE21	Miscellaneous Details	AR 5	Concourse Level Plan Match Line B to Match Line C
EE16	Riser Diagrams	AR 4	Concourse Level Plan Match Line A to Match Line B

REFERENCE DRAWINGS

REV	DATE	BY	SUB	APP	DESCRIPTION
1	6-14-68	SD	PV	WP	Addendum #1 incorporated

DESIGNED BY H. DUTTON
DRAWN BY C.M. SCHLUSTER
CHECKED BY P. KEWLEY
TRACED BY N. PETERS/P.K.
DATE 26 FEB 68

REGISTERED CIVIL ENGINEER J. GEORGE THOM NO. 8397 STATE OF CALIFORNIA

SAN FRANCISCO BAY AREA RAPID TRANSIT DISTRICT

BECHTEL CORPORATION ENGINEERS SAN FRANCISCO — SUBMITTED

PARSONS BRINCKERHOFF-TUDOR-BECHTEL ENGINEERING CONSULTANTS — APPROVED

SOUTHERN ALAMEDA CO. LINE
COLISEUM STATION
CONCOURSE AREA & EQUIPMENT ROOMS
PLAN & SECTIONS SHEET I

SCALE AS NOTED
CONTRACT — PACKAGE IA3021-A002
SHEET NO. — REV. ME2-1
PAGE NO. 91

CONTRACT 15NL-140
CONTRACT SHEET NO. R001
PG. NO. 082

AS BUILT

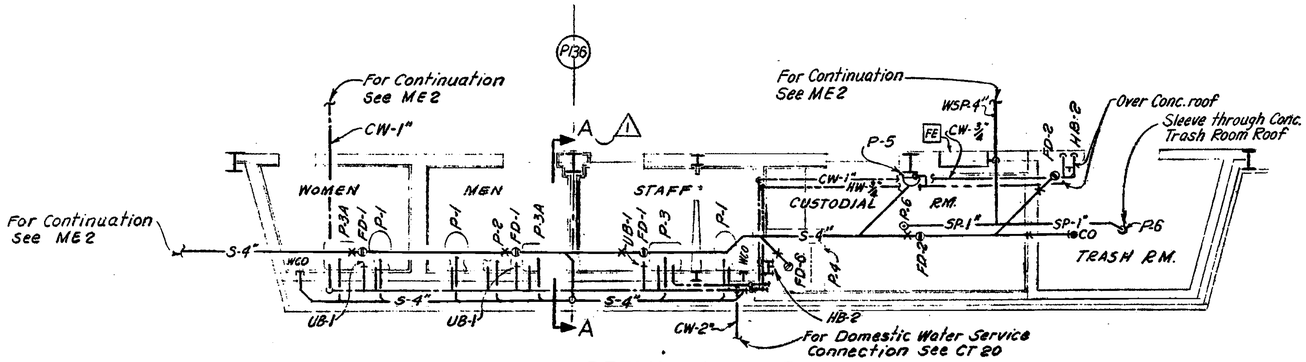

DETAIL - 1
Scale: 1/4"=1'-0"

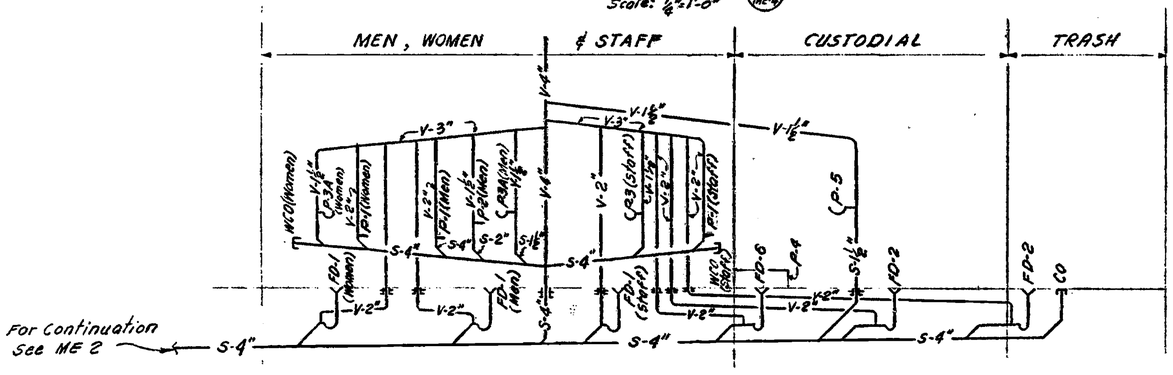

WASTE & VENT PIPING SCHEMATIC
Not to Scale

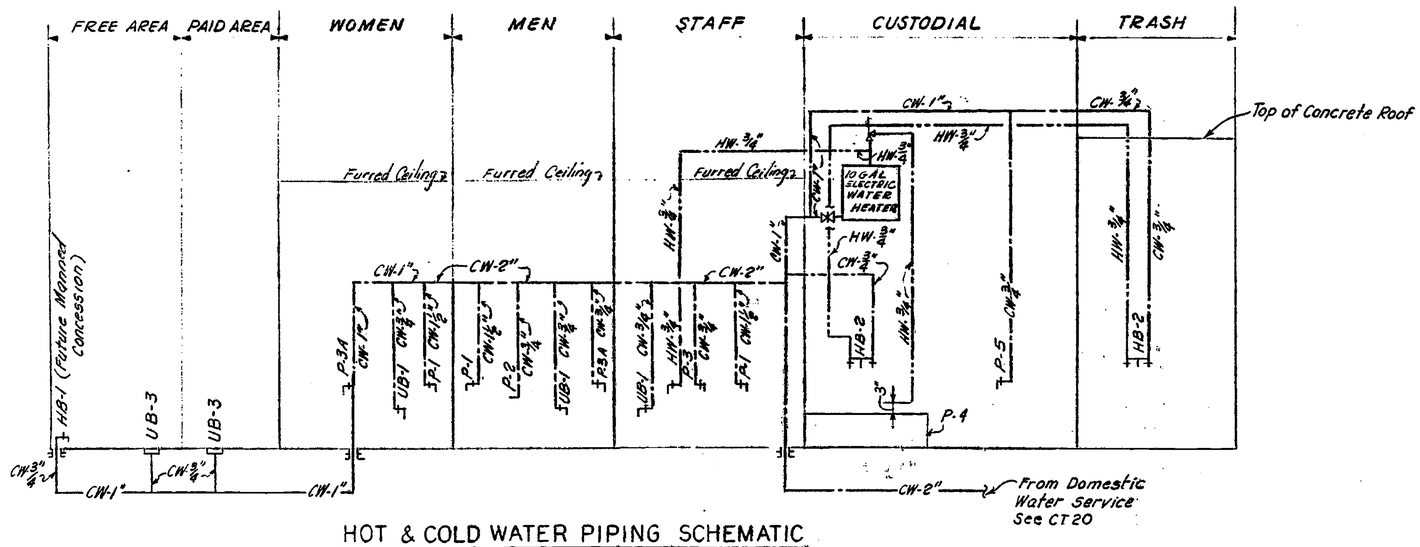

HOT & COLD WATER PIPING SCHEMATIC
Not to Scale

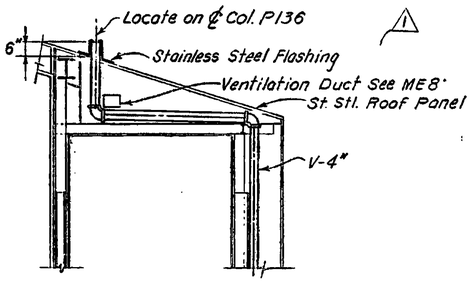

SECTION - A
Scale: 3/8"=1'-0"

PLUMBING FIXTURE CONNECTION SCHEDULE						
SYMBOL	FIXTURE DESCRIPTION	REQ'D	PIPE SIZE SOIL WASTE	VENT	WATER CW	WATER HW
P-1	Water Closet	3	3"	2"	1½"	
P-2	Urinal	1	2"	1½"	¾"	
P-3	Lavatory	1	1½"	1½"	½"	½"
P-3A	Lavatory	2	1½"	1½"	½"	
P-4	Mop Sink	2	3"	2"	½"	½"
P-5	Drinking Water Dispenser	1	1¼"	1¼"	⅛"	
P-6	Pendant Spray Sprinkler	2			¾	
FD-1	Floor Drain	3	4"	2"		
FD-1a	Floor Drain	4	4"	2"		
FD-2	Floor Drain	3	4"	2"		
FD-3	Floor Drain	1	3	2		
FD-4	Floor Drain	2	4	2		
FD-5	Floor Drain	1	3	2		
FD-6	Floor Drain (Mop Sink)	2	3	2		
HB-1	Hose Bibb	1			½"	
HB-2	Hose Bibb	3			½"	½"
UB-1	Utility Box (Wall)	3			¾"	
UB-2	Utility Box (Wall)	1			¾"	
UB-3	Utility Box (Floor)	7			¾"	
UB-4	Utility Box (Floor)	0				

AS BUILT

SHEET NO.	TITLE
EE 7	Concourse Area Auxiliary Systems
EE 5	Concourse Area Lighting
EE 4	Concourse Area Lighting
SE 3	Concourse Area (134-136) Ground Floor Plan
SE 2	Concourse Area (136-138) Foundation Plan
AR 27	Toilet Custodial & Trash Rooms Plans & Elevations

REFERENCE DRAWINGS

CONTRACT 15NL-140
CONTRACT SHEET NO. R002
PG. NO. 083

1 7 Dec. 70 HM HM WP Added Sect A showing term. of 4" vent p.
REV. DATE BY SUB APP DESCRIPTION

DESIGNED BY H. DUTTON
DRAWN BY C. SCHLUSTER
CHECKED BY P. Kewley
IN CHARGE W. Peters / P/K
DATE 26 FEB 68

REGISTERED CIVIL ENGINEER J. GEORGE THOM NO. 8397 STATE OF CALIFORNIA

SAN FRANCISCO BAY AREA RAPID TRANSIT DISTRICT

BECHTEL CORPORATION ENGINEERS SAN FRANCISCO — SUBMITTED

PARSONS BRINCKERHOFF-TUDOR-BECHTEL ENGINEERING CONSULTANTS — APPROVED

SOUTHERN ALAMEDA CO. LINE
COLISEUM STATION
CONCOURSE AREA
PIPING SCHEMATICS & DETAILS

SCALE: NONE
CONTRACT — PACKAGE: IA3021-A002
SHEET NO. — REV.: ME4-1
PAGE NO.: 93

D-300874-A

LOT D

LOT E

LOT C

LOT F

LOT A

On-Street Curb B

70TH AVENUE

71ST AVENUE

SNELL ST

SAN LEANDRO BLVD

COLISEUM STATION

CONTRACTOR'S FIELD OFFICE TRAILER

STALL #

18'-0"

STOP

ONLY

AREA SHOWN

CONTRACT	
15NL-140	
CONTRACT SHEET NO.	PG. NO.
R003	084

COLISEUM STATION
"A" LINE - STATION A-30
PATRON PARKING - WEST

7200 SAN LEANDRO BLVD. OAKLAND, CA. 94621
CAD01835 SHEET 002 OF 003 REV 01

SUB-SHEET SET

RECORD SET

LOCATION/STATION

A30 - COLISEUM STATION

BART SYSTEM MAP - AREA OF WORK

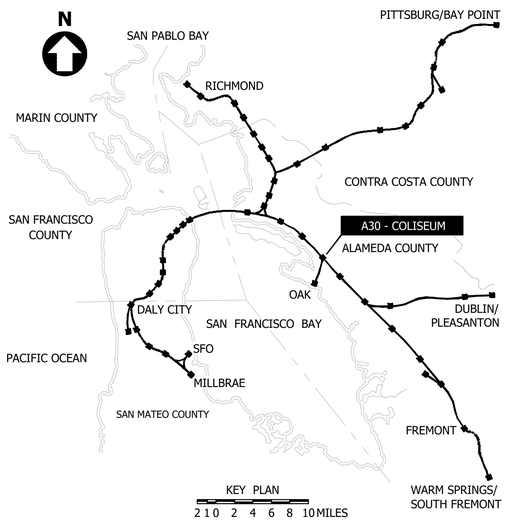

STATION VICINITY MAP



SEQUENCE OF OPERATION

EVENT \ RESPONSE	ANNUNCIATE EVENT AT THE MAIN STATION FACU & ANN(S)	ANNUNCIATE EVENT AT THE SUB STATION FACU	FIRE SIGNAL TO OCC VIA SCADA	TROUBLE SIGNAL TO OCC VIA SCADA	SUPERVISORY SIGNAL TO OCC VIA SCADA	OPERATE NOTIFICATION APPLIANCES	OPERATE ESCALATOR SHUT DOWN RELAYS	OPEN FARE GATES VIA BART SCADA	SHUT DOWN TRAIN CONTROL HVAC SUPPLY FAN	CLOSE FSD AT TRAIN CONTROL SUPPLY HVAC FAN	RECALL ELEVATOR TO PRIMARY FLOOR	RECALL ELEVATOR TO SECONDARY FLOOR	OPERATE ELEVATOR POWER SHUNT TRIP	PREEMPT PA ANNOUNCEMENT FROM OCC AT MAIN STATION
MANUAL FIRE ALARM PULL STATION	●	●	●			●	●	●						●
GENERAL AREA HEAT DETECTOR	●	●	●			●	●	●						●
GENERAL AREA SMOKE DETECTOR	●	●	●			●	●	●						●
TRAIN CONTROL HVAC SUPPLY FAN SMOKE DETECTOR	●	●	●						●					●
SMOKE DETECTORS MOUNTED IN AIR DUCTS OF HVAC SYSTEM	●	●			●				●					
SMOKE DETECTOR AIR INTAKE TRAIN CONTROL FAN	●	●	●			●	●	●	●	●				●
ELECTRICAL ISOLATION RELAY FAULT (SCADA 24V)	●	●		●										
ELEVATOR MACHINERY ROOM HEAT DETECTOR	●	●	●			●	●	●			●		●	●
ELEVATOR MACHINERY ROOM SMOKE DETECTOR	●	●	●			●	●	●			●			●
ELEVATOR LOBBY HEAT DETECTOR (CONCOURSE)	●	●	●			●	●	●				●		●
ELEVATOR LOBBY HEAT DETECTOR (PLATFORMS)	●	●	●			●	●	●			●			●
FIRE SPRINKLER WATERFLOW SWITCH	●	●	●			●	●	●						●
FIRE SPRINKLER VALVE SUPERVISORY SWITCH	●	●			●									
SUB-STATION PANEL - ALARM	●	●	●			●	●	●						
SUB-STATION PANEL - SUPERVISORY	●	●			●									
SUB-STATION PANEL - TROUBLE	●	●		●										
SUB-STATION MANUAL FIRE ALARM PULL STATION	●	●	●			●	●	●						●
SUB-STATION AMBIENT BEAM DETECTOR COVERAGE	●	●	●			●	●	●						●
FIRE ALARM CONTROL UNIT FAULT	●	●		●										
NAC POWER SUPPLY FAULT	●	●		●										
NAC AMPLIFIER FAULT	●	●		●										
CIRCUIT FAULT	●	●		●										
MAIN STATION MANUAL MICROPHONE ACTIVATION	●	●			●	●								●

SCOPE OF WORK

THIS IS AN EXISTING APPROVED FIRE ALARM SYSTEM THAT IS BEING COMPLETELY REPLACED. THE EXISTING SYSTEMS AND OFF-SITE MONITORING WILL REMAIN UNTOUCHED AND IN OPERATION UNTIL THE APPROVED FIRE FINAL OF THE NEW SYSTEM. UPON APPROVAL, DEMOLITION OF THE EXISTING SYSTEM WILL COMMENCE.

THIS SYSTEM WILL CONSIST OF A NEW FIRE ALARM CONTROL PANEL WITH NEW CIRCUITRY, DETECTORS, MODULES, AND NOTIFICATION APPLIANCES. THE OWNER WILL PROVIDE ONSITE MONITORING VIA A SCADA SYSTEM WHICH IS INTEGRATED INTO THE FIRE ALARM SYSTEM VIA PROGRAMMABLE RELAY DISCRETE DRY CONTACTS. THE FIRE ALARM SYSTEM WILL PROVIDE SECONDARY OFF-SITE MONITORING VIA AN ACTIVE GRAPHIC ANNUNCIATOR.

THE NEW SIEMENS MAIN STATION FIRE ALARM PANEL WILL EXTEND ITS SIGNALING LINE CIRCUIT TO THE EXISTING SUBSTATION FIRE ALARM PANEL AND PROVIDE MODULES TO MONITOR AND TRANSMIT THE SIGNAL STATUS BACK TO THE MAIN STATION FIRE ALARM PANEL. THE EXISTING SUBSTATION FIRE ALARM PANEL WILL DO THE SAME PROCEDURE.

DISCLAIMER

THESE DRAWINGS HAVE BEEN PREPARED USING AVAILABLE ORIGINAL CONSTRUCTION DRAWING INFORMATION PROVIDED BY BART, AND THE RESULTS OF A LIMITED SURVEY OF THE EXISTING CONDITIONS. SITE SURVEYING WAS GENERALLY LIMITED TO ITEMS AND CONDITIONS READILY VIEWABLE FROM THE FLOOR LEVELS.

THESE DRAWINGS DEPICT THE GENERAL STATION LAYOUT AND ARRANGEMENT AND MAY NOT/DO NOT SHOW ALL STATION FEATURES. THEY HAVE BEEN DEVELOPED SOLELY FOR THE PURPOSE OF THE FIRE ALARM SYSTEM REPLACEMENT PROJECT AND CONTAIN INFORMATION SUFFICIENT FOR THAT PURPOSE.

NO WARRANTY/GUARANTEE (IMPLIED OR STATED) IS MADE REGARDING THE ACCURACY AND COMPLETENESS OF THESE DRAWINGS BEYOND THAT NECESSARY TO SHOW THE STATION FEATURES NECESSARY FOR THE FIRE ALARM REPLACEMENT PROJECT.

DOOR & ROOM LEGEND

NO.	ROOM
101	ELECTRICAL ROOM
102	STAFF
103	CUSTODIAN
104	TRASH
105	SWITCHBOARD ROOM
106	TRANSFORMER VAULT
107	FAN ROOM
108	TRAIN CONTROL ROOM
108A	BATTERY ROOM

ADDRESS:
7200 SAN LEANDRO BLVD.
OAKLAND, CA 94621

CONTRACT
15NL-140

CONTRACT SHEET NO.	PG. NO.
R004	**085**

REV	DATE	BY	SUB	APP	DESCRIPTION
4	12/06/23	CM	BG	TD	RESUBMISSION PER OAK AHJ COMMENTS DATED 10/24/23
3	07/20/23	AG	BG	TD	RESUBMISSION PER REVIEW COMMENTS DATED 07/17/23
2	06/26/23	CM	BG	TD	RESUBMISSION PER REVIEW COMMENTS DATED 06/14/23
1	06/02/23	CM	BG	TD	INCORPORATED CHANGES PER SCHEDULE 1 REVIEW COMMENTS
0	04/28/23	CM	BG	TD	SUBMITTAL REVIEW
9	11/03/25	SR	SR	JM	RECORD DRAWINGS (REV#2)
8	02/05/25	BG	BG	TD	RECORD DRAWINGS (REV#2)
7	07/17/24	AM	BG	TD	RECORD DRAWINGS
6	05/21/24	CM	BG	TD	RESUBMISSION PER REVIEW COMMENTS DATED 04/13/24
5	01/03/24	CM	BG	TD	RESUBMISSION PER REVIEW COMMENTS DATED 12/27/23

DESIGNED BY BD
DRAWN BY CM
CHECKED BY TD
IN CHARGE –
DATE 04/28/23

ELECTRONIC SECURITY SYSTEMS CONTRACTOR #758796 CLASS: C10 EXPIRES 02-28-27 FIRE ALARM SYSTEMS CONTRACTOR

SAN FRANCISCO BAY AREA RAPID TRANSIT DISTRICT

SIEMENS

SIEMENS INDUSTRY, INC.
46897 BAYSIDE PARKWAY
FREMONT, CA 94538
510.293.2100
866.728.7767 (24-HR SERVICE)
STATE LIC: C-10 #758796

SUBMITTED _____ APPROVED _____

FIRE ALARM SYSTEM REPLACEMENT
PHASE 3
A30 - COLISEUM
SUB-TITLE SHEET
AREA OF WORK, SEQUENCE OF OPERATION
ROOM AND FA-SYMBOL LEGEND 1 of 2

CADD FILENAME F100-A30.dwg
SIZE D | SCALE ---
CONTRACT NO. **15IJ-130** | REV. **7**
AREA CODE **F100-A30** | PAGE NO. **063.1**

PLOT DATE: 11/03/2025 13:29 BY: 204417PB FILE: C:\Users\p204417pb\OneDrive - Siemens AG\BCT NOCUS Documents - BOA2 ITS BART FA Replacement Phase III_44OP-349954\Engineering Documents\A30 - COLISEUM SHEETS\F30\F100-A30.dwg SIZE: E-1/4HB PAPER SIZE: ANSI D 22x34"

SUB-SHEET SET

RECORD SET

LOCATION/STATION

A30 - COLISEUM STATION

SYMBOL LEGEND

FA-SLC SYMBOLS:

MAIN BODY:
ROUND = CEILING MOUNT
SQUARE = WALL MOUNT

Lx-xx NOTE — ANNOTATIONS/NOTES:
Lx-xx SLC LINE CIRCUIT
VP VANDALISM PROTECTED
WP WEATHER PROTECTED

FA-NAC SYMBOLS:

INDICATOR FOR SPEAKER/HORN

MAIN BODY:
ROUND = CEILING MOUNT
SQUARE = WALL MOUNT

INDICATOR FOR VISUAL (STROBE)

ANNOTATIONS/NOTES:
Sx-xx SPEAKER CIRCUIT
Vx-xx VISUAL (STROBE) CIRCUIT
xxcd VISUAL (STROBE) CANDELA RATING
VP VANDALISM PROTECTED
WP WEATHER PROTECTED

CIRCUIT CONTINUES AT IDENTICAL MARKER (AT RISER DIAGRAMS)

FAN — AIR SUPPLY FAN CONTROL (SHUT DOWN)

EBO — FARE GATE EMERGENCY BARRIER OPENING

ESCL — ESCALATOR CONTROL (SHUT DOWN)

ELEV — ELEVATOR CONTROL (RECALL)

60x?x18 — ADDITIONAL FA-ENCLOSURE RATED NEMA-4 WITH DIMENSIONS (W/H/D) (ACCORDING SHEET 024 - G380)

IRC 24x30x6 — INTERPOSING RELAY CABINET WITH ENCLOSURE DIMENSIONS (W/H/D) (ACCORDING SHEET 026 - G391)

FAB 12x12x6 — FIRE ALARM CONTROL/MONITOR BOX FOR UP TO (4) SLC MODULE WITH ENCLOSURE DIMENSIONS (ACCORDING SHEET 025 - G390)

(E)FA — (E) FIRE ALARM CONTROL PANELS TO BE REMOVED (INCLUDING CONTROL UNIT, CHARGER, BATTERIES, POWER SUPPLY, WIRING PANEL, RELAY PANEL)

FA-CONDUITS & LABEL SYMBOLS:

CONDUIT, EXPOSED, ¾" GRC (UNLESS OTHERWISE SPECIFIED)

CONDUIT, HIDDEN OR EMBEDDED, ¾" GRC (UNLESS OTHERWISE SPECIFIED)

(E) WIRE DUCT

CONDUIT J-BOX

CONDUIT PULL BOX (SIZE VARIES)

L1 S1 — CONDUIT WITH CIRCUIT LABEL

CONDUIT GOING UP

CONDUIT GOING DOWN

SYMBOL LEGEND

DEVICE & SYMBOL LEGEND

ALL PARTS ARE SIEMENS UNLESS OTHERWISE NOTED

SYMBOL	QTY	MODEL NUMBER	DESCRIPTION	CSFM LISTING NUMBER	*ROUGH IN
FACU	1	FCI2016-U1 S54400-A55-A1	DESIGO PERIPHERY BOARD (252-POINT SYSTEM)	7165-0067:0264	INTERNAL PANEL COMPONENT
	1	FCM2018-U2 S54400-C40-A1	DESIGO OPERATING INTERFACE UNIT	7165-0067:0264	INTERNAL PANEL COMPONENT
	2	FHD2004-U1 S54400-B52-A1	INNER DOOR, BLACK	7165-0067:0264	INTEGRAL CABINET COMPONENT
	1	FHD2006-U1 S54400-C46-A1	CLEAR-LENS WINDOW	7165-0067:0264	INTEGRAL CABINET COMPONENT
	1	FHD2009-R1 S54400-B114-A2	BLANK PLATE - RED	7165-0067:0264	INTEGRAL CABINET COMPONENT
	1	FHD2007-R2 S54400-B111-A2	OUTER DOOR (3HU, 3WIN, RED)	7165-0067:0264	INTEGRAL CABINET COMPONENT
	1	FHB2005-R1 S54400-B110-A2	THREE-HEIGHT-UNIT (3HU) BACK BOX, RED	7165-0067:0264	INTEGRAL CABINET COMPONENT
	2	FCM2022-U2 S54400-C44-A1	BLANK OPTION MODULE	7165-0067:0264	INTEGRAL CABINET COMPONENT
	1	VTO2004-U2 S54400-C61-A1	MICROPHONE OPTION MODULE	7165-0067:0264	INTEGRAL PANEL COMPONENT
	1	VTO2001-U2 S54400-C60-A1	SWITCH MODULE (24) SWITCHES	7165-0067:0264	INTEGRAL PANEL COMPONENT
	1	FCA2016-U1 S54400-A39-A1	RS-485 INTERFACE BOARD	7165-0067:0264	INTEGRAL PANEL COMPONENT
	1	FCA2031-A1 S54400-A153-A1	MODULE NETWORK (MoNet) CONNECTION CARD	7165-0067:0264	INTEGRAL PANEL COMPONENT
	1	VCA2002-A1 S54400-A47-A1	VOICE SYSTEM CARD CAGE	7165-0067:0264	INTEGRAL PANEL COMPONENT
	1	VCC2001-A1 S54400-A40-A1	VOICE CPU CARD	7165-0067:0264	INTEGRAL PANEL COMPONENT
	1	VCC2002-A1 S54400-A41-A1	VOICE I/O CARD	7165-0067:0264	INTEGRAL PANEL COMPONENT
	4	VCI2001-U1 S54400-A45-A1	VOICE AMPLIFIER CARD (25V OR 70V)	7165-0067:0264	INTEGRAL PANEL COMPONENT
	1	VCI2003-A1 S54400-A141-A1	VOIP MODULE	7165-0067:0264	INTEGRAL PANEL COMPONENT
	1	VN2001-A1 S54400-A42-A1	ELECTRIC ETHERNET MODULE	7165-0067:0264	INTEGRAL PANEL COMPONENT
	1	FHA2031-U1 S54400-B44-A1	DIN RAIL SET	7165-0067:0264	INTEGRAL PANEL COMPONENT
	1	FP2012-U1 S54400-Z60-A1	300-WATT POWER SUPPLY	7165-0067:0264	INTEGRAL PANEL COMPONENT
	1	FCA2018-U1 S54400-A65-A1	REMOTE PERIPHERAL MODULE	7165-0067:0259	INTEGRAL PANEL COMPONENT
	1	CAB-BATT-R 500-633925	BATTERY CABINET FOR UP TO (2) 100 A.H. BATTERIES-R	7300-0067:0172	SURFACE OR SEMI-FLUSH MOUNT
	2	PS-121000 A7F30026435	BATTERY 12 VOLT 100 AMP HOUR	-	BATTERY CABINET
	1	--	FIELD SERVER - ETHERNET TO RS-485 COMMUNICATION	---	---
ANN	1	FT2014-R2 S54400-F75-A1	REMOTE TERMINAL DISPLAY, RED	7165-0067:0264	4S DEEP BOX
	1	FTH-2073-UA S54433-A6-A1	UNIVERSAL (WEATHERPROOF) ENCLOSURE FOR ANNUNCIATOR	---	BRACKETS & HARDWARE FOR MTG
PAD5	2	PAB2-ENCL-R S54339-A11-A1	PAD-5 2HU ENCLOSURE, RED	7315-0067:0507	SURFACE MOUNT
	3	PAD-5-MB S54339-A5-A1	PAD-5 MAIN BOARD (WITH ONE [1] ADAPTER PLATE)	7315-0067:0507	INSIDE PAB-ENCL
	3	FP-2012-U1 S54400-Z60-A1	300W POWER SUPPLY	7165-0067:0264	INSIDE PAB-ENCL
	3	PAD-5-CLSA S54339-A6-A1	PAD-5 CLASS 'A' EXPANSION CARD	7315-0067:0507	INSIDE PAB-ENCL
	4	PS-12350 A7F30026431	BATTERY 12 VOLT 35 AMP HOUR	N/A	INSIDE PAB-ENCL
(3)VP	9	FDT421 S54320-F5-A1	INTELLIGENT HEAT DETECTOR HEAD	7270-0067:0262	DB-11
	9	DB-11 500-094151	DETECTOR BASE	7300-0067:0134	4S DEEP BOX w/ 1-GANG RING
	3	SSU03501	SPACE AGE - HEAT DETECTOR GUARD - WHITE	N/A	-
	16	FDO421 S54320-F4-A1	INTELLIGENT PHOTOELECTRIC SMOKE DETECTOR HEAD	7272-0067:0258	DB-11
	16	DB-11 500-094151	DETECTOR BASE	7300-0067:0134	4S DEEP BOX w/ 1-GANG RING
RTOO	9	FDCIO422 S54322-F4-A1	INPUT/OUTPUT MODULE	7165-0067:0264	5S DEEP BOX w/ EXTENSION
XTR	7	XTRI-R S54370-B1-A1	INTELLIGENT CONTROLLABLE RELAY w/ SINGLE INPUT MONITOR MODULE	7300-0067:0501	4S DEEP BOX

DEVICE & SYMBOL LEGEND (CONTINUED)

ALL PARTS ARE SIEMENS UNLESS OTHERWISE NOTED

SYMBOL	QTY	MODEL NUMBER	DESCRIPTION	CSFM LISTING NUMBER	*ROUGH IN
XTR	14	XTRI-S S54370-B3-A1	INTELLIGENT SINGLE INPUT MONITOR MODULE	7300-0067:0501	4S DEEP BOX
TG F	14	XMS-S S54321-F7-A1	INTELLIGENT MANUAL PULL STATION SINGLE ACTION, KEY RESET	7150-0067:0512	4S DEEP BOX w/ 1-GANG RING
	14	STI-1100	STI-STOPPER II - WITH HORN FOR FLUSH MOUNT = (TG)	N/A	-
WP/TG F XTR	6	MSM-K-WP 500-698217	WEATHERPROOF PULL STATION w/ BACKBOX SINGLE ACTION, KEY RESET	7150-0067:0215	BACKBOX PROVIDED
	6	XTRI-M S54370-B4-A1	INTELLIGENT SINGLE INPUT MINI-MONITOR MODULE	7300-0067:0501	INSIDE PULL STATION BACKBOX
	6	STI-1100	STI-STOPPER II - WITH HORN FOR FLUSH MOUNT = (TG)	N/A	-
WP VP XTR	4	DT-135WP 500-087260	CONVENTIONAL WEATHERPROOF HEAT DETECTOR	7270-0067:0224	WP BOX w/ 1/2" NPT
WP VP XTR	4	ADAPT PLATE 500-618020	ADAPTER PLATE DECORATOR RING	7300-0067:0134	-
	4	XTRI-M 500-034000	INTELLIGENT SINGLE INPUT MONITOR MODULE	7300-0067:0242	INSIDE WP BOX
	4	STI-9610	STI - STEEL WEB STOPPERS - HIGH PROFILE - SURFACE MOUNT	N/A	-
15 30 75 110	3	SLSWW-F S54329-F25-A2	MULTI-CANDELA LED STROBE, WALL MOUNT - WHITE FIELD SELECTABLE 15/30/75/110cd	7135-0067:0505	4S DEEP BOX w/ 1-GANG RING
15 30 75 110	32	SLSPSWW-F S54329-F43-A1	HiFi MULTI-CANDELA SPEAKER/LED STROBE, 70V, WALL MOUNT - WHITE FIELD SELECTABLE 15/30/75/110cd, 1/8-2W	7320-0067:0503	4S DEEP BOX w/ EXTENSION
15 30 75 95	1	SLSPSCW-F S54329-F42-A1	HiFi MULTI-CANDELA SPEAKER/LED STROBE, 70V, CEILING MOUNT - WHITE FIELD SELECTABLE 15/30/75/95cd, 1/8-2W	7320-0067:0503	4S DEEP BOX w/ EXTENSION
	2	SLSPWW-F S54329-F38-A2	HiFi SPEAKER, 70V, WALL MOUNT - WHITE FIELD SELECTABLE 1/8-2W	7320-0067:0509	4S DEEP BOX w/ EXTENSION
WP	6	SETSF-VW 500-636048	WEATHERPROOF SPEAKER, 70V, WALL MOUNT - WHITE FIELD SELECTABLE 1/8-8W	7320-0067:0255	WBBS-W
	6	WBBS-W 500-636131	WEATHERPROOF BACKBOX - WHITE	7320-0067:0255	SURFACE MOUNT
WP 115	17	SET-S17-W-WP 500-636059	WEATHERPROOF SPEAKER/STROBE FIXED 115CD PER UL1638, 70V, WALL MOUNT - WHITE, FIELD SELECTABLE 1/8-8W	7125-0067:0254	MT-SUR-BOX-W
	17	MT-SUR-BOX-W 500-636118	WEATHERPROOF BACKBOX - WHITE	7125-0067:0254	SURFACE MOUNT
WP 115	29	SET-S17-CW-WP 500-636057	WEATHERPROOF SPEAKER/STROBE FIXED 115CD PER UL1638, 70V, CEILING MOUNT - WHITE, FIELD SELECTABLE 1/8-8W	7125-0067:0254	MT-SUR-BOX-W
	29	MT-SUR-BOX-W 500-636118	WEATHERPROOF BACKBOX - WHITE	7125-0067:0254	SURFACE MOUNT

(*) SIEMENS WEATHERPROOF NOTIFICATION APPLIANCES ARE A REBRANDED COOPER WHEELOCK MANUFACTURED PARTS AND ARE FIXED AT 115CD WALL OR CEILING FOR THE SET-S17 SERIES PER UL 1638.

IR	11	W199X-13	(MAGNECRAFT) POWER RELAY	N/A	-
SURGE	2	E120V-CT	SPACE AGE - 120VAC SURGE PROTECTOR	N/A	SURFACE MOUNT
DSB	1	SSU00672 A7F30101780	SPACE AGE FDB ACE-11 FIRE DOCUMENT BOX (RED) [13"H x 12"W x 2.25"D]	N/A	SURFACE MOUNT
JB	F.B.O.	<BY OTHERS>	JUNCTION BOX	F.B.O.	F.B.O.
	-	---	TAMPER SWITCH	N/A	---
	-	---	WATER FLOW SWITCH	N/A	---

(*) THE ABOVE REFERENCED "ROUGH IN" MOUNTING REQUIREMENTS INDICATED SHALL BE CONSIDERED AS A MINIMUM RECOMMENDATION ONLY. SPECIFIC FIELD CONDITIONS SHALL DICTATE ACTUAL ROUGH IN REQUIRED INSTALLATIONS. I.E. MULTIPLE CONDUIT RACEWAYS WITHIN A DEVICE BACKBOX, WIRE SIZE, WIRE TYPE, ETC. THE ADDITION OF EXTENSION RINGS OR LARGER BACKBOXES MAY BE REQUIRED TO BE INSTALLED TO ACCOMMODATE FOR ACTUAL FIELD CONDITIONS. ALTERNATE ROUGH IN EQUIPMENT WHICH MEETS SIEMENS INSTALLATION STANDARDS AND IS OF A LIKE NATURE MAY BE UTILIZED. ALL ROUGH IN INSTALLATION SHALL PROPERLY COMPLY WITH ALL APPLICABLE CODES/STANDARDS/REGULATIONS. TO MINIMIZE ANY COST IMPACTS ALL ISSUES AND DISCREPANCIES MUST IMMEDIATELY BE BROUGHT TO THE ATTENTION OF SIEMENS PRIOR TO ANY ROUGH-IN/INSTALLATION.

CONTRACT	
15NL-140	
CONTRACT SHEET NO.	PG. NO.
R005	086

REV	DATE	BY	SUB	APP	DESCRIPTION
4	12/06/23	CM	BG	TD	RESUBMISSION PER OAK AHJ COMMENTS DATED 10/24/23
3	07/20/23	AG	BG	TD	RESUBMISSION PER REVIEW COMMENTS DATED 07/17/23
2	06/26/23	CM	BG	TD	RESUBMISSION PER REVIEW COMMENTS DATED 06/14/23
1	06/02/23	CM	BG	TD	INCORPORATED CHANGES PER SCHEDULE 1 REVIEW COMMENTS
0	04/28/23	CM	BG	TD	SUBMITTAL REVIEW
9	11/03/25	SR	SR	JM	RECORD DRAWINGS (REV#2)
8	02/05/25	BG	BG	TD	RECORD DRAWINGS (REV#2)
7	07/17/24	AM	BG	TD	RECORD DRAWINGS
6	05/21/24	CM	BG	TD	RESUBMISSION PER REVIEW COMMENTS DATED 04/13/24
5	01/03/24	CM	BG	TD	RESUBMISSION PER REVIEW COMMENTS DATED 12/27/23

DESIGNED BY BD
DRAWN BY CM
CHECKED BY TD
IN CHARGE -
DATE 04/28/23

ELECTRICAL BUILDING TECHNOLOGIES #758796 CLASS: C10 EXPIRES: 02-28-27 ACTIVE

SAN FRANCISCO BAY AREA RAPID TRANSIT DISTRICT

SIEMENS

SIEMENS INDUSTRY, INC.
46897 BAYSIDE PARKWAY
FREMONT, CA 94538
510.293.2100
866.728.7767 (24-HR SERVICE)
STATE LIC: C-10 #758796

SUBMITTED _____ APPROVED _____

FIRE ALARM SYSTEM REPLACEMENT
PHASE 3
A30 - COLISEUM
SUB-TITLE SHEET
AREA OF WORK, SEQUENCE OF OPERATION
ROOM AND FA-SYMBOL LEGEND 2 of 2

CADD FILENAME	
F100-A30.dwg	
SIZE	SCALE
D	---
CONTRACT NO.	REV.
15IJ-130	7
AREA CODE	PAGE NO.
F100-A30	063.2

PLOT DATE: 11/03/2025 - 13:29 BY: JOHN TIRI FILE: C:\Users\JOHN\Dropbox\Dropbox - Siemens AG\BCT ACCUS Documents - BCA2 ITS BART FA Replacement Phase III_4405-39995\Engineering Documents\A30 - COLISEUM SHEETS\ITS\F100-A30.dwg SIZE: 0.1498 PAPER SIZE: ANSI D 22x34"

RISER DIAGRAM FACU AND AMP

RECORD SET

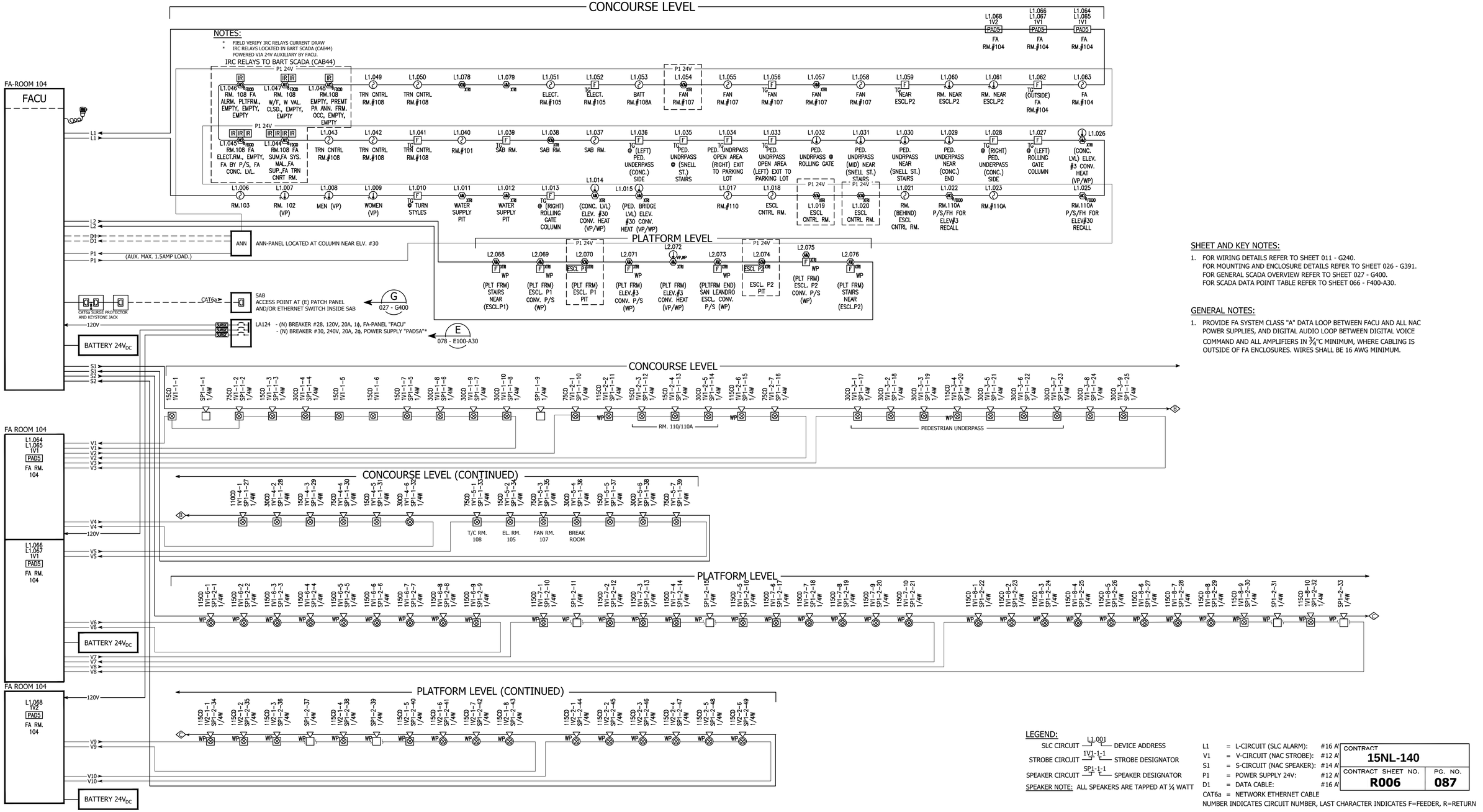

SHEET AND KEY NOTES:

1. FOR WIRING DETAILS REFER TO SHEET 011 - G240.
   FOR MOUNTING AND ENCLOSURE DETAILS REFER TO SHEET 026 - G391.
   FOR GENERAL SCADA OVERVIEW REFER TO SHEET 027 - G400.
   FOR SCADA DATA POINT TABLE REFER TO SHEET 066 - F400-A30.

GENERAL NOTES:

1. PROVIDE FA SYSTEM CLASS "A" DATA LOOP BETWEEN FACU AND ALL NAC POWER SUPPLIES, AND DIGITAL AUDIO LOOP BETWEEN DIGITAL VOICE COMMAND AND ALL AMPLIFIERS IN ¾"C MINIMUM, WHERE CABLING IS OUTSIDE OF FA ENCLOSURES. WIRES SHALL BE 16 AWG MINIMUM.

LEGEND:

SLC CIRCUIT L1.001 — DEVICE ADDRESS
STROBE CIRCUIT 1V1-1-1 — STROBE DESIGNATOR
SPEAKER CIRCUIT SP1-1-1 — SPEAKER DESIGNATOR
SPEAKER NOTE: ALL SPEAKERS ARE TAPPED AT ¼ WATT

L1 = L-CIRCUIT (SLC ALARM): #16 AWG
V1 = V-CIRCUIT (NAC STROBE): #12 AWG
S1 = S-CIRCUIT (NAC SPEAKER): #14 AWG
P1 = POWER SUPPLY 24V: #12 AWG
D1 = DATA CABLE: #16 AWG
CAT6a = NETWORK ETHERNET CABLE
NUMBER INDICATES CIRCUIT NUMBER, LAST CHARACTER INDICATES F=FEEDER, R=RETURN

CONTRACT	
15NL-140	
CONTRACT SHEET NO.	PG. NO.
R006	087

REV	DATE	BY	SUB	APP	DESCRIPTION
4	12/06/23	CM	BG	TD	RESUBMISSION PER OAK AHJ COMMENTS DATED 10/24/23
3	07/20/23	AG	BG	TD	RESUBMISSION PER REVIEW COMMENTS DATED 07/17/23
2	06/26/23	CM	BG	TD	RESUBMISSION PER REVIEW COMMENTS DATED 06/14/23
1	06/02/23	CM	BG	TD	INCORPORATED CHANGES PER SCHEDULE 1 REVIEW COMMENTS
0	04/28/23	CM	BG	TD	SUBMITTAL REVIEW
REV	DATE	BY	SUB	APP	DESCRIPTION
9	11/03/25	SR	SR	JM	RECORD DRAWINGS (REV#2)
8	02/05/25	BG	BG	TD	RECORD DRAWINGS (REV#2)
7	07/17/24	AM	BG	TD	RECORD DRAWINGS
6	05/21/24	CM	BG	TD	RESUBMISSION PER REVIEW COMMENTS DATED 04/13/24
5	01/03/24	CM	BG	TD	RESUBMISSION PER REVIEW COMMENTS DATED 12/27/23
REV	DATE	BY	SUB	APP	DESCRIPTION

DESIGNED BY BD
DRAWN BY CM
CHECKED BY TD
IN CHARGE –
DATE 04/28/23

LICENSED BUILDING TECHNOLOGISTS #758796 CLASS: C10 EXPIRES: 02-28-27 ACTIVE

SAN FRANCISCO BAY AREA RAPID TRANSIT DISTRICT

SIEMENS

SIEMENS INDUSTRY, INC.
46897 BAYSIDE PARKWAY
FREMONT, CA 94538
510.293.2100
866.728.7767 (24-HR SERVICE)
STATE LIC: C-10 #758796

SUBMITTED _____ APPROVED _____

FIRE ALARM SYSTEM REPLACEMENT
PHASE 3
A30 - COLISEUM
FA-SYSTEM
RISER DIAGRAM
FACU AND PAD5

CADD FILENAME	
F200-A30.dwg	
SIZE	SCALE
D	---
CONTRACT NO.	REV.
15IJ-130	7
AREA CODE	PAGE NO.
F200-A30	064

PLOT DATE: 11/03/2025 15:29 BY: ZIXH1TPR FILE: C:\Users\zixh1tpr\OneDrive - Siemens AG\ECT MCOUS Documents - BOA2 FB BART FA Replacement Phase III_4404-349954\Engineering Documents\A30 - COLISEUM SHEETSET\F200-A30.dwg SIZE: 6.15MB PAPER SIZE: ANSI D (22.0"

CIRCUIT AND VOLTAGE DROP CALCULATIONS

RECORD SET

Building **COLISEUM STATION**
Panel # **FIRE ALARM PANEL - P1**
Panel Location **FA ROOM 104**

BATTERY SIZING CALCULATION — 2/25/2025

Device	Qty	Standby	Total Standby	Alarm	Total Alarm
Panel Components					
FCM2018-U2 Operating Unit	1	0.1250	0.1250	0.1660	0.1660
FCI2016-U1 252-pt Board	1	0.1050	0.1050	0.1360	0.1360
FP2012-U1 300W Power Supply	3	0.0000	0.0000	0.0000	0.0000
FCA2016-U1 RS-485 Module	1	0.0580	0.0580	0.0580	0.0580
FN2006-U1 SM Fiber Module	1	0.1270	0.1270	0.1270	0.1270
FCA2015-U1 DACT	1	0.0250	0.0250	0.0330	0.0330
FCA2018-U1 Remote Printer Module	1	0.1500	0.1500	0.1500	0.1500
VCA2002-A1 Voice Card Cage	1	0.0040	0.0040	0.0160	0.0160
VCC2001-A1 Voice CPU	1	0.2000	0.2000	0.2100	0.2100
VCC2002-A1 Voice I/O Module	1	0.1510	0.1510	0.1560	0.1560
VCI2001-U1 Voice Amplifier	4	0.1000	0.4000	3.2000	12.8000
VCI2003-A1 VOIP Module	1	0.0430	0.0430	0.0430	0.0430
VTO2001-U2 24-Switch Module	1	0.0160	0.0160	0.1430	0.1430
VTO2004-U2 Microphone Module	1	0.0290	0.0290	0.0540	0.0540
FCA2031-A1 MoNet Module	1	0.0010	0.0010	0.0010	0.0010
FT2014-R2 Remote Display Terminal	1	0.0750	0.0750	0.1360	0.1360
Field Server	1	0.1250	0.1250	0.1250	0.1250
Addressable Devices					
FDO421 Photo Detector	16	0.0003	0.0045	0.0003	0.0045
FDT421 Thermal Detector	8	0.0003	0.0020	0.0004	0.0033
FDCIO422 4-Input/4-Output	7	0.0010	0.0070	0.0010	0.0070
XMS-S/D/M Manual Pull Station	14	0.0005	0.0070	0.0005	0.0070
XTRI-S Input Module	14	0.0005	0.0070	0.0007	0.0091
XTRI-R Input/Relay Module	7	0.0005	0.0035	0.0008	0.0053
Auxiliary Devices					
TG-7FSA	1	0.1800	0.1800	0.1100	0.1100
Dry Contact Inputs-SCADA/ESCL/FAN	23	0.0350	0.8050	0.0350	0.8050
			Standby Current		Alarm Current
			2.650		15.305

Standby Current: 2.650 Amps
Standby Time: 24 Hours
Total Standby Draw: 63.60 Amp-Hours

Batteries Provided: 2(PS121000)
Battery Size: 100.00 A.H.
Total Standby + Alarm 67.43 A.H. (-)
Correction Factor per NFPA 16.86 A.H. (-)
Spare Capacity: 15.72 A.H. (=)

Alarm Current: 15.305 Amps
Alarm Time: 15 Minutes
Total Alarm Draw: 3.83 Amp-Hours

Building **COLISEUM STATION**
Panel # **FIRE ALARM PANEL P1**
Panel Location **FA ROOM 104**

dB LINELOSS Calculation

Device Power	Circuit SP1-1 Qty	SP1-1 Watts	Circuit Qty	Circuit Watts	Circuit SP1-2 Qty	SP1-2 Watts	Circuit Qty	Circuit Watts	Total Qty
Speaker - 1/4 Watt Tap 0.25	18	4.500	--		36	9.000	--		54
Voltage	70.7 Volts		70.7 Volts		70.7 Volts		70.7 Volts		
Total Power on Circuit	4.50 Watts		0.00 Watts		9.00 Watts		0.00 Watts		
Load Resistance	1111 Ohms		Ohms		555.4 Ohms		Ohms		
Distance (Wire Length)	983 Feet		Feet		2979 Feet		Feet		
Wire Size	14 AWG		14 AWG		14 AWG		14 AWG		
Resistance (per 1000 ft)	3.14 Ohms		3.14 Ohms		3.14 Ohms		3.14 Ohms		
Total Wire Resistance	6.17 Ohms		0.00 Ohms		18.71 Ohms		0.00 Ohms		
Power LINELOSS (dB)	-0.02 dB		dB		-0.14 dB		dB		

Calculation Method:

Load Resistance (LR) = (Voltage x Voltage) / Power

Total Wire Resistance (WR) = 2 x (Resistance / 1000) x Distance

Power LINELOSS (dB) = 10 x Log (1- WR / (WR+LR))

https://siemensnam.sharepoint.com/teams/BostHTMasterLibrary/NOCR/CA-R/_Gardena/_19031 S HAMILTON AVE/FB/Calcs_MASTER-COLISEUM-LINELOSS Calculations.xlsm#'1

Siemens Fire Safety Division
NAC Voltage Drop Calculator
for Audio/Visual devices

VOLTAGE DROP CALCULATIONS - FWD

PROJECT: **BARTP3 - A30 COLISEUM STATION**
DATE: **June 7, 2024**
CIRCUIT NUMBER: **1V1-1**
AREA COVERED: **A30 COLISEUM STATION 1V1**

MINIMUM Power Supply Voltage 24
MINIMUM Strobe Voltage 16
POINT-TO-POINT METHOD

Wire Gauge	Ohm's per 1000 ft
12	1.93

Device Number	Device Current (A)	Device Candela	Distance from previous device (ft)	Voltage At Device	Voltage Drop from source	Voltage Percent Drop
Device 1	0.030	15	30	23.95	0.05	0.20%
Device 2	0.102	75	23	23.92	0.08	0.35%
Device 3	0.030	15	15	23.90	0.10	0.42%
Device 4	0.040	30	15	23.88	0.12	0.48%
Device 5	0.030	15	23	23.86	0.14	0.56%
Device 6	0.030	15	16	23.85	0.15	0.61%
Device 7	0.040	30	75	23.81	0.19	0.80%
Device 8	0.040	30	15	23.80	0.20	0.83%
Device 9	0.040	30	15	23.80	0.20	0.85%
Device 10	0.040	30	15	23.79	0.21	0.86%
END				23.79	0.21	0.86%
END				23.79	0.21	0.86%
END				23.79	0.21	0.86%
END				23.79	0.21	0.86%
END				23.79	0.21	0.86%
END				23.79	0.21	0.86%
END				23.79	0.21	0.86%
END				23.79	0.21	0.86%
END				23.79	0.21	0.86%
END				23.79	0.21	0.86%
END				23.79	0.21	0.86%
END				23.79	0.21	0.86%
END				23.79	0.21	0.86%
END				23.79	0.21	0.86%
END				23.79	0.21	0.86%
END				23.79	0.21	0.86%
END				23.79	0.21	0.86%
END				23.79	0.21	0.86%

SPARE CAPACITY
CURRENT IS WITHIN LIMITS

Available	2.25 Amps
Used	0.42 Amps
Spare	1.83 Amps
% Spare	81%

VOLTAGE DROP
VOLTAGE IS WITHIN LIMITS

Current (A)	Distance (ft)	Voltage Drop
0.42	242	0.2070
Percent Voltage Drop		0.86%
End-of-Line Voltage		23.79
% Spare		99%

Siemens Fire Safety Division
NAC Voltage Drop Calculator
for Audio/Visual devices

VOLTAGE DROP CALCULATIONS - FWD

PROJECT: **BARTP3 - A30 COLISEUM STATION**
DATE: **June 7, 2024**
CIRCUIT NUMBER: **1V1-2**
AREA COVERED: **A30 COLISEUM STATION 1V1**

MINIMUM Power Supply Voltage 24
MINIMUM Strobe Voltage 16
POINT-TO-POINT METHOD

Wire Gauge	Ohm's per 1000 ft
12	1.93

Device Number	Device Current (A)	Device Candela	Distance from previous device (ft)	Voltage At Device	Voltage Drop from source	Voltage Percent Drop
Device 1	0.102	75	177	23.59	0.41	1.70%
Device 2	0.146	115	47	23.50	0.50	2.07%
Device 3	0.030	15	22	23.47	0.53	2.19%
Device 4	0.030	15	24	23.44	0.56	2.32%
Device 5	0.040	30	23	23.42	0.58	2.42%
Device 6	0.146	115	39	23.38	0.62	2.58%
Device 7	0.102	75	43	23.36	0.64	2.65%
END				23.36	0.64	2.65%
END				23.36	0.64	2.65%
END				23.36	0.64	2.65%
END				23.36	0.64	2.65%
END				23.36	0.64	2.65%
END				23.36	0.64	2.65%
END				23.36	0.64	2.65%
END				23.36	0.64	2.65%
END				23.36	0.64	2.65%
END				23.36	0.64	2.65%
END				23.36	0.64	2.65%
END				23.36	0.64	2.65%
END				23.36	0.64	2.65%
END				23.36	0.64	2.65%
END				23.36	0.64	2.65%
END				23.36	0.64	2.65%
END				23.36	0.64	2.65%
END				23.36	0.64	2.65%

SPARE CAPACITY
CURRENT IS WITHIN LIMITS

Available	2.25 Amps
Used	0.60 Amps
Spare	1.65 Amps
% Spare	74%

VOLTAGE DROP
VOLTAGE IS WITHIN LIMITS

Current (A)	Distance (ft)	Voltage Drop
0.60	375	0.6357
Percent Voltage Drop		2.65%
End-of-Line Voltage		23.36
% Spare		97%

Siemens Fire Safety Division
NAC Voltage Drop Calculator
for Audio/Visual devices

VOLTAGE DROP CALCULATIONS - FWD

PROJECT: **BARTP3 - A30 COLISEUM STATION**
DATE: **June 7, 2024**
CIRCUIT NUMBER: **1V1-3**
AREA COVERED: **A30 COLISEUM STATION 1V1**

MINIMUM Power Supply Voltage 24
MINIMUM Strobe Voltage 16
POINT-TO-POINT METHOD

Wire Gauge	Ohm's per 1000 ft
12	1.93

Device Number	Device Current (A)	Device Candela	Distance from previous device (ft)	Voltage At Device	Voltage Drop from source	Voltage Percent Drop
Device 1	0.040	30	145	23.74	0.26	1.09%
Device 2	0.040	30	63	23.64	0.36	1.52%
Device 3	0.040	30	61	23.54	0.46	1.90%
Device 4	0.146	115	61	23.46	0.54	2.24%
Device 5	0.040	30	60	23.42	0.58	2.43%
Device 6	0.040	30	61	23.38	0.62	2.59%
Device 7	0.040	30	62	23.35	0.65	2.71%
Device 8	0.040	30	90	23.32	0.68	2.82%
Device 9	0.040	30	15	23.32	0.68	2.83%
END				23.32	0.68	2.83%
END				23.32	0.68	2.83%
END		

CIRCUIT AND VOLTAGE DROP CALCULATIONS

RECORD SET

Siemens Fire Safety Division
NAC Voltage Drop Calculator
for Audio/Visual devices

VOLTAGE DROP CALCULATIONS - FWD

PROJECT: **BART P3 - A30 COLISEUM STATION**
DATE: **June 7, 2024**
CIRCUIT NUMBER: **1V1-5**
AREA COVERED: **A30 COLISEUM STATION 1V1**

MINIMUM Power Supply Voltage: 24
MINIMUM Strobe Voltage: 16
POINT-TO-POINT METHOD

Wire Gauge	Ohm's per 1000 ft
12	1.93

Device Number	Device Current (A)	Device Candela	Distance from previous device (ft)	Voltage: At Device	Voltage: Drop from source	Voltage: Percent Drop
Device 1	0.102	75	303	23.48	0.52	2.17%
Device 2	0.030	15	71	23.38	0.62	2.57%
Device 3	0.102	75	88	23.28	0.72	3.01%
Device 4	0.040	30	200	23.11	0.89	3.69%
Device 5	0.030	15	29	23.09	0.91	3.77%
Device 6	0.040	30	23	23.08	0.92	3.83%
Device 7	0.102	75	15	23.08	0.92	3.85%
END				23.08	0.92	3.85%
END				23.08	0.92	3.85%
END				23.08	0.92	3.85%
END				23.08	0.92	3.85%
END				23.08	0.92	3.85%
END				23.08	0.92	3.85%
END				23.08	0.92	3.85%
END				23.08	0.92	3.85%
END				23.08	0.92	3.85%
END				23.08	0.92	3.85%
END				23.08	0.92	3.85%
END				23.08	0.92	3.85%
END				23.08	0.92	3.85%
END				23.08	0.92	3.85%
END				23.08	0.92	3.85%
END				23.08	0.92	3.85%
END				23.08	0.92	3.85%
END				23.08	0.92	3.85%
END				23.08	0.92	3.85%

SPARE CAPACITY
CURRENT IS WITHIN LIMITS

Available	2.25 Amps
Used	0.45 Amps
Spare	1.80 Amps
% Spare	**80%**

VOLTAGE DROP
VOLTAGE IS WITHIN LIMITS

Current (A)	Distance (ft)	Voltage Drop
0.45	1155	1.59
Percent Voltage Drop		6.61%
End-of-Line Voltage		**22.41**
% Spare		**93%**

Siemens Fire Safety Division
NAC Voltage Drop Calculator
for Audio/Visual devices

VOLTAGE DROP CALCULATIONS - FWD

PROJECT: **BART P3 - A30 COLISEUM STATION**
DATE: **June 7, 2024**
CIRCUIT NUMBER: **1V1-6**
AREA COVERED: **A30 COLISEUM STATION 1V1**

MINIMUM Power Supply Voltage: 24
MINIMUM Strobe Voltage: 16
POINT-TO-POINT METHOD

Wire Gauge	Ohm's per 1000 ft
12	1.93

Device Number	Device Current (A)	Device Candela	Distance from previous device (ft)	Voltage: At Device	Voltage: Drop from source	Voltage: Percent Drop
Device 1	0.146	115	70	23.64	0.36	1.48%
Device 2	0.146	115	33	23.50	0.50	2.10%
Device 3	0.146	115	33	23.37	0.63	2.64%
Device 4	0.146	115	41	23.23	0.77	3.22%
Device 5	0.146	115	33	23.13	0.87	3.61%
Device 6	0.146	115	33	23.06	0.94	3.92%
Device 7	0.146	115	33	23.00	1.00	4.15%
Device 8	0.146	115	33	22.97	1.03	4.30%
Device 9	0.146	115	26	22.95	1.05	4.37%
END				22.95	1.05	4.37%
END				22.95	1.05	4.37%
END				22.95	1.05	4.37%
END				22.95	1.05	4.37%
END				22.95	1.05	4.37%
END				22.95	1.05	4.37%
END				22.95	1.05	4.37%
END				22.95	1.05	4.37%
END				22.95	1.05	4.37%
END				22.95	1.05	4.37%
END				22.95	1.05	4.37%
END				22.95	1.05	4.37%
END				22.95	1.05	4.37%
END				22.95	1.05	4.37%
END				22.95	1.05	4.37%
END				22.95	1.05	4.37%
END				22.95	1.05	4.37%
END				22.95	1.05	4.37%

SPARE CAPACITY
CURRENT IS WITHIN LIMITS

Available	2.25 Amps
Used	1.31 Amps
Spare	0.94 Amps
% Spare	**42%**

VOLTAGE DROP
VOLTAGE IS WITHIN LIMITS

Current (A)	Distance (ft)	Voltage Drop
1.31	335	1.05
Percent Voltage Drop		4.37%
End-of-Line Voltage		**22.95**
% Spare		**96%**

Siemens Fire Safety Division
NAC Voltage Drop Calculator
for Audio/Visual devices

VOLTAGE DROP CALCULATIONS - FWD

PROJECT: **BART P3 - A30 COLISEUM STATION**
DATE: **June 7, 2024**
CIRCUIT NUMBER: **1V1-7**
AREA COVERED: **A30 COLISEUM STATION 1V1**

MINIMUM Power Supply Voltage: 24
MINIMUM Strobe Voltage: 16
POINT-TO-POINT METHOD

Wire Gauge	Ohm's per 1000 ft
12	1.93

Device Number	Device Current (A)	Device Candela	Distance from previous device (ft)	Voltage: At Device	Voltage: Drop from source	Voltage: Percent Drop
Device 1	0.146	115	244	22.62	1.38	5.73%
Device 2	0.146	115	80	22.22	1.78	7.42%
Device 3	0.146	115	11	22.17	1.83	7.63%
Device 4	0.146	115	11	22.13	1.87	7.81%
Device 5	0.146	115	80	21.86	2.14	8.93%
Device 6	0.146	115	23	21.79	2.21	9.20%
Device 7	0.146	115	143	21.47	2.53	10.55%
Device 8	0.146	115	33	21.41	2.59	10.78%
Device 9	0.146	115	33	21.38	2.62	10.94%
Device 10	0.146	115	33	21.36	2.64	11.01%
END				21.36	2.64	11.01%
END				21.36	2.64	11.01%
END				21.36	2.64	11.01%
END				21.36	2.64	11.01%
END				21.36	2.64	11.01%
END				21.36	2.64	11.01%
END				21.36	2.64	11.01%
END				21.36	2.64	11.01%
END				21.36	2.64	11.01%
END				21.36	2.64	11.01%
END				21.36	2.64	11.01%
END				21.36	2.64	11.01%
END				21.36	2.64	11.01%
END				21.36	2.64	11.01%
END				21.36	2.64	11.01%
END				21.36	2.64	11.01%
END				21.36	2.64	11.01%

SPARE CAPACITY
CURRENT IS WITHIN LIMITS

Available	2.25 Amps
Used	1.46 Amps
Spare	0.79 Amps
% Spare	**35%**

VOLTAGE DROP
VOLTAGE IS WITHIN LIMITS

Current (A)	Distance (ft)	Voltage Drop
1.46	691	2.64
Percent Voltage Drop		11.01%
End-of-Line Voltage		**21.36**
% Spare		**89%**

Siemens Fire Safety Division
NAC Voltage Drop Calculator
for Audio/Visual devices

VOLTAGE DROP CALCULATIONS - FWD

PROJECT: **BART P3 - A30 COLISEUM STATION**
DATE: **June 7, 2024**
CIRCUIT NUMBER: **1V1-8**
AREA COVERED: **A30 COLISEUM STATION 1V1**

MINIMUM Power Supply Voltage: 24
MINIMUM Strobe Voltage: 16
POINT-TO-POINT METHOD

Wire Gauge	Ohm's per 1000 ft
12	1.93

Device Number	Device Current (A)	Device Candela	Distance from previous device (ft)	Voltage: At Device	Voltage: Drop from source	Voltage: Percent Drop
Device 1	0.146	115	80	23.55	0.45	1.88%
Device 2	0.146	115	33	23.38	0.62	2.58%
Device 3	0.146	115	33	23.23	0.77	3.20%
Device 4	0.146	115	33	23.10	0.90	3.74%
Device 5	0.146	115	33	22.99	1.01	4.20%
Device 6	0.146	115	33	22.90	1.10	4.59%
Device 7	0.146	115	33	22.82	1.18	4.90%
Device 8	0.146	115	33	22.77	1.23	5.13%
Device 9	0.146	115	42	22.72	1.28	5.33%
Device 10	0.146	115	80	22.68	1.32	5.52%
END				22.68	1.32	5.52%
END				22.68	1.32	5.52%
END				22.68	1.32	5.52%
END				22.68	1.32	5.52%
END				22.68	1.32	5.52%
END				22.68	1.32	5.52%
END				22.68	1.32	5.52%
END				22.68	1.32	5.52%
END				22.68	1.32	5.52%
END				22.68	1.32	5.52%
END				22.68	1.32	5.52%
END				22.68	1.32	5.52%
END				22.68	1.32	5.52%
END				22.68	1.32	5.52%
END				22.68	1.32	5.52%
END				22.68	1.32	5.52%
END				22.68	1.32	5.52%
END				22.68	1.32	5.52%

SPARE CAPACITY
CURRENT IS WITHIN LIMITS

Available	2.25 Amps
Used	1.46 Amps
Spare	0.79 Amps
% Spare	**35%**

VOLTAGE DROP
VOLTAGE IS WITHIN LIMITS

Current (A)	Distance (ft)	Voltage Drop
1.46	433	1.32
Percent Voltage Drop		5.52%
End-of-Line Voltage		**22.68**
% Spare		**94%**

Siemens Fire Safety Division
NAC Voltage Drop Calculator
for Audio/Visual devices

VOLTAGE DROP CALCULATIONS - FWD

PROJECT: **BART P3 - A30 COLISEUM STATION**
DATE: **June 7, 2024**
CIRCUIT NUMBER: **1V2-1**
AREA COVERED: **A30 COLISEUM STATION 1V2**

MINIMUM Power Supply Voltage: 24
MINIMUM Strobe Voltage: 16
POINT-TO-POINT METHOD

Wire Gauge	Ohm's per 1000 ft
12	1.93

Device Number	Device Current (A)	Device Candela	Distance from previous device (ft)	Voltage: At Device	Voltage: Drop from source	Voltage: Percent Drop
Device 1	0.146	115	394	22.22	1.78	7.40%
Device 2	0.146	115	10	22.18	1.82	7.57%
Device 3	0.146	115	10	22.15	1.85	7.71%
Device 4	0.146	115	80	21.92	2.08	8.65%
Device 5	0.146	115	80	21.74	2.26	9.40%
Device 6	0.146	115	42	21.67	2.33	9.69%
Device 7	0.146	115	33	21.64	2.36	9.85%
Device 8	0.146	115	33	21.62	2.38	9.93%
END				21.62	2.38	9.93%
END				21.62	2.38	9.93%
END				21.62	2.38	9.93%
END				21.62	2.38	9.93%
END				21.62	2.38	9.93%
END				21.62	2.38	9.93%
END				21.62	2.38	9.93%
END				21.62	2.38	9.93%
END				21.62	2.38	9.93%
END				21.62	2.38	9.93%
END				21.62	2.38	9.93%
END				21.62	2.38	9.93%
END				21.62	2.38	9.93%
END				21.62	2.38	9.93%
END				21.62	2.38	9.93%
END				21.62	2.38	9.93%
END				21.62	2.38	9.93%

SPARE CAPACITY
CURRENT IS WITHIN LIMITS

Available	2.25 Amps
Used	1.17 Amps
Spare	1.08 Amps
% Spare	**48%**

VOLTAGE DROP
VOLTAGE IS WITHIN LIMITS

Current (A)	Distance (ft)	Voltage Drop
1.17	682	2.38
Percent Voltage Drop		9.93%
End-of-Line Voltage		**21.62**
% Spare		**90%**

Siemens Fire Safety Division
NAC Voltage Drop Calculator
for Audio/Visual devices

VOLTAGE DROP CALCULATIONS - REV

PROJECT: **BART P3 - A30 COLISEUM STATION**
DATE: **June 7, 2024**
CIRCUIT NUMBER: **1V1-5**
AREA COVERED: **A30 COLISEUM STATION 1V1**

MINIMUM Power Supply Voltage: 24
MINIMUM Strobe Voltage: 16
POINT-TO-POINT METHOD

Wire Gauge	Ohm's per 1000 ft
12	1.93

CLASS-A RETURN LENGTH: 729 feet

Device Number	Device Current (A)	Device Candela	Distance from previous	Voltage: At Device	Voltage: Drop from source	Voltage: Percent Drop
				0.00	0.00	0.00
				24.00	0.00	0.00
				24.00	0.00	0.00
				24

CIRCUIT AND VOLTAGE DROP CALCULATIONS

RECORD SET

Siemens Fire Safety Division
NAC Voltage Drop Calculator
for Audio/Visual devices

VOLTAGE DROP CALCULATIONS - FWD

PROJECT: **BARTP3 - A30 COLISEUM STATION**
DATE: **June 7, 2024**
CIRCUIT NUMBER: **1V2-2**
AREA COVERED: **A30 COLISEUM STATION 1V2**

MINIMUM Power Supply Voltage: 24
MINIMUM Strobe Voltage: 16
POINT-TO-POINT METHOD

Wire Gauge	Ohm's per 1000 ft
12	1.93

Device Number	Device Current (A)	Device Candela	Distance from previous device (ft)	Voltage At Device	Voltage Drop from source	Percent Drop
Device 1	0.146	115	241	23.19	0.81	3.40%
Device 2	0.146	115	33	23.09	0.91	3.78%
Device 3	0.146	115	33	23.02	0.98	4.09%
Device 4	0.146	115	33	22.96	1.04	4.33%
Device 5	0.146	115	33	22.92	1.08	4.48%
Device 6	0.146	115	33	22.91	1.09	4.56%
END				22.91	1.09	4.56%
END				22.91	1.09	4.56%
END				22.91	1.09	4.56%
END				22.91	1.09	4.56%
END				22.91	1.09	4.56%
END				22.91	1.09	4.56%
END				22.91	1.09	4.56%
END				22.91	1.09	4.56%
END				22.91	1.09	4.56%
END				22.91	1.09	4.56%
END				22.91	1.09	4.56%
END				22.91	1.09	4.56%
END				22.91	1.09	4.56%
END				22.91	1.09	4.56%
END				22.91	1.09	4.56%
END				22.91	1.09	4.56%
END				22.91	1.09	4.56%
END				22.91	1.09	4.56%
END				22.91	1.09	4.56%
END				22.91	1.09	4.56%
END				22.91	1.09	4.56%
END				22.91	1.09	4.56%
END				22.91	1.09	4.56%
END				22.91	1.09	4.56%

SPARE CAPACITY	
CURRENT IS WITHIN LIMITS	
Available	2.25 Amps
Used	0.88 Amps
Spare	1.37 Amps
% Spare	61%

VOLTAGE DROP		
VOLTAGE IS WITHIN LIMITS		
Current (A)	Distance (ft)	Voltage Drop
0.88	406	1.09
Percent Voltage Drop		4.56%
End-of-Line Voltage		22.91
% Spare		95%

Siemens Fire Safety Division
NAC Voltage Drop Calculator
for Audio/Visual devices

VOLTAGE DROP CALCULATIONS - FWD

PROJECT: BARTP3 - A30 COLISEUM STATION
DATE: June 7, 2024
CIRCUIT NUMBER: 1V2-2
AREA COVERED: A30 COLISEUM STATION 1V2

MINIMUM Power Supply Voltage: 24
MINIMUM Strobe Voltage: 16
POINT-TO-POINT METHOD

Wire Gauge	Ohm's per 1000 ft
12	1.93

Device Number	Device Current (A)	Device Candela	Distance from previous device (ft)	Voltage At Device	Voltage Drop from source	Percent Drop
Device 1	0.146	115	241	23.19	0.81	3.40%
Device 2	0.146	115	33	23.09	0.91	3.78%
Device 3	0.146	115	33	23.02	0.98	4.09%
Device 4	0.146	115	33	22.96	1.04	4.33%
Device 5	0.146	115	33	22.92	1.08	4.48%
Device 6	0.146	115	33	22.91	1.09	4.56%
END				22.91	1.09	4.56%
END				22.91	1.09	4.56%
END				22.91	1.09	4.56%
END				22.91	1.09	4.56%
END				22.91	1.09	4.56%
END				22.91	1.09	4.56%
END				22.91	1.09	4.56%
END				22.91	1.09	4.56%
END				22.91	1.09	4.56%
END				22.91	1.09	4.56%
END				22.91	1.09	4.56%
END				22.91	1.09	4.56%
END				22.91	1.09	4.56%
END				22.91	1.09	4.56%
END				22.91	1.09	4.56%
END				22.91	1.09	4.56%
END				22.91	1.09	4.56%
END				22.91	1.09	4.56%
END				22.91	1.09	4.56%
END				22.91	1.09	4.56%
END				22.91	1.09	4.56%
END				22.91	1.09	4.56%
END				22.91	1.09	4.56%
END				22.91	1.09	4.56%
END				22.91	1.09	4.56%

SPARE CAPACITY	
CURRENT IS WITHIN LIMITS	
Available	2.25 Amps
Used	0.88 Amps
Spare	1.37 Amps
% Spare	61%

VOLTAGE DROP		
VOLTAGE IS WITHIN LIMITS		
Current (A)	Distance (ft)	Voltage Drop
0.88	406	1.09
Percent Voltage Drop		4.56%
End-of-Line Voltage		22.91
% Spare		95%

CONTRACT
15NL-140
CONTRACT SHEET NO. R009
PG. NO. 090

REV	DATE	BY	SUB	APP	DESCRIPTION
4	12/06/23	CM	BG	TD	RESUBMISSION PER OAK AHJ COMMENTS DATED 10/24/23
3	07/20/23	AG	BG	TD	RESUBMISSION PER REVIEW COMMENTS DATED 07/17/23
2	06/26/23	CM	BG	TD	RESUBMISSION PER REVIEW COMMENTS DATED 06/14/23
1	06/02/23	CM	BG	TD	INCORPORATED CHANGES PER SCHEDULE 1 REVIEW COMMENTS
0	04/28/23	CM	BG	TD	SUBMITTAL REVIEW
9	11/03/25	SR	SR	JM	RECORD DRAWINGS (REV#2)
8	02/05/25	BG	BG	TD	RECORD DRAWINGS (REV#2)
7	07/17/24	AM	BG	TD	RECORD DRAWINGS
6	05/21/24	CM	BG	TD	RESUBMISSION PER REVIEW COMMENTS DATED 04/13/24
5	01/03/24	CM	BG	TD	RESUBMISSION PER REVIEW COMMENTS DATED 12/27/23

DESIGNED BY: BD
DRAWN BY: CM
CHECKED BY: TD
IN CHARGE: –
DATE: 04/28/23

CALIFORNIA BUILDING TECHNOLOGY LICENSE #758796 CLASS: C10 C7 EXPIRES 02-28-27

SAN FRANCISCO BAY AREA RAPID TRANSIT DISTRICT

SIEMENS

SIEMENS INDUSTRY, INC.
46897 BAYSIDE PARKWAY
FREMONT, CA 94538
510.293.2100
866.728.7767 (24-HR SERVICE)
STATE LIC: C-10 #758796

SUBMITTED _____ APPROVED _____

FIRE ALARM SYSTEM REPLACEMENT
PHASE 3
A30 - COLISEUM
FA-SYSTEM
CURRENT AND VOLTAGE DROP

CADD FILENAME: F300-A30.dwg
SIZE: D | SCALE: ---
CONTRACT NO.: 15IJ-130 | REV.: 7
AREA CODE: F300-A30 | PAGE NO.: 065.3

PLOT DATE: 11/03/2025 - 15:39 BY: JOHNTHN FILE: C:\Users\JOHNTHN\OneDrive - Siemens AG\ECT NOCUS Documents - BCA2 ITS BART FA Replacement Phase III_4405-349954\Engineering Documents\A30 - COLISEUM SHEETS\ITS\F300-A30.dwg SIZE: 6.13MB PAPER SIZE: ANSI D 22x34"

IRC - INTERPOSING RELAY CABINET - DATA POINTS TO BART SCADA SYSTEM

RECORD SET

IRC INTERPOSING RELAYS - DATA POINTS TO BART SCADA SYSTEM SIGNALS

	MODULE	#	RELAY OUT	FA-ADDRESS	IRS RELAY	DESCRIPTION	IRC-TERMINAL #	CAB44-TERMINAL #	NOTE
FACU	CRM-1	1	T0	L1.044	IRC-1.0	FIRE ALARM SUMMARY	X3-1 C X3-2 N.O. X3-3 N.C.		
		2	T1	L1.044	IRC-1.1	FIRE ALARM SYSTEM MALFUNCTION	X3-4 C X3-5 N.O. X3-6 N.C.		
		3	T2	L1.044	IRC-1.2	FIRE ALARM SUPERVISORY	X3-7 C X3-8 N.O. X3-9 N.C.		
		4	T3	L1.044	IRC-1.3	FIRE ALARM TRAIN CONTROL ROOM	X3-10 C X3-11 N.O. X3-12 N.C.		T/C ROOM 108
		5	T4	L1.045	IRC-1.4	FIRE ALARM ELECTRICAL ROOM	X3-13 C X3-14 N.O. X3-15 N.C.		ELEC. ROOM 105
		6	T5	L1.045	IRC-1.5		X3-16 C X3-17 N.O. X3-18 N.C.		
	CRM-2	1	T0	L1.045	IRC-2.0	FIRE ALARM BY MANUAL PULL STATION	X3-19 C X3-20 N.O. X3-21 N.C.		
		2	T1	L1.045	IRC-2.1	FIRE ALARM CONCOURSE LEVEL	X3-22 C X3-23 N.O. X3-24 N.C.		
		3	T2	L1.046	IRC-2.2	FIRE ALARM PLATFORM	X3-25 C X3-26 N.O. X3-27 N.C.		
		4	T3	L1.046	IRC-2.3		X3-28 C X3-29 N.O. X3-30 N.C.		
		5	T4	L1.046	IRC-2.4		X3-31 C X3-32 N.O. X3-33 N.C.		
		6	T5	L1.046	IRC-2.5		X3-34 C X3-35 N.O. X3-36 N.C.		
	CRM-3	1	T0	L1.047	IRC-3.0	WATER FLOW	X3-37 C X3-38 N.O. X3-39 N.C.		
		2	T1	L1.047	IRC-3.1	WATER VALVE CLOSED	X3-40 C X3-41 N.O. X3-42 N.C.		
		3	T2	L1.047	IRC-3.2		X3-43 C X3-44 N.O. X3-45 N.C.		
		4	T3	L1.047	IRC-3.3		X3-46 C X3-47 N.O. X3-48 N.C.		
		5	T4	L1.048	IRC-3.4		X3-49 C X3-50 N.O. X3-51 N.C.		
		6	T5	L1.048	IRC-3.5	PREEMPT PA ANNOUNCEMENT FROM OCC	X3-52 C X3-53 N.O. X3-54 N.C.		
									SPARE
									SPARE
									SPARE
									SPARE
									SPARE
									SPARE

GENERAL NOTES:

A. CONTRACTOR SHALL BRING (3) NEW SIGNAL CABLES 18x #16 AWG TWISTED PAIRS, SHIELDED, TO BART SCADA CAB44 INPUTS AND TERMINATE INSIDE CAB44 WITH ON-SITE SUPPORT BY THE DISTRICT.

B. FOR WIRING DETAILS REFER TO SHEET 011 - G240.

C. FOR ENCLOSURE AND MOUNTING DETAILS REFER TO SHEET 026 - G391.

D. FOR SCADA SCHEMATIC OVERVIEW REFER TO SHEET 027 - G400.

E. FOR RELATED RISER DIAGRAM REFER TO SHEET 064 - F200-A30 FUSION.

F. THE 24VDC SOURCE IS BEING PROVIDED TO THE INTERPOSING RELAY CABINET (IRC) PROVIDING POWER TO THE DATA POINTS (CRM1 THROUGH CRM3) FROM THE X800 TERMINAL OUTPUT (AUXILIARY POWER) FROM FCI2016-U1 DESIGO PRERIPHERY BOARD.

CONTRACT	
15NL-140	
CONTRACT SHEET NO.	PG. NO.
R010	091

REV	DATE	BY	SUB	APP	DESCRIPTION
4	12/06/23	CM	BG	TD	RESUBMISSION PER OAK AHJ COMMENTS DATED 10/24/23
3	07/20/23	AG	BG	TD	RESUBMISSION PER REVIEW COMMENTS DATED 07/17/23
2	06/26/23	CM	BG	TD	RESUBMISSION PER REVIEW COMMENTS DATED 06/14/23
1	06/02/23	CM	BG	TD	INCORPORATED CHANGES PER SCHEDULE 1 REVIEW COMMENTS
0	04/28/23	CM	BG	TD	SUBMITTAL REVIEW

REV	DATE	BY	SUB	APP	DESCRIPTION
9	11/03/25	SR	SR	JM	RECORD DRAWINGS (REV#2)
8	02/05/25	BG	BG	TD	RECORD DRAWINGS (REV#2)
7	07/17/24	AM	BG	TD	RECORD DRAWINGS
6	05/21/24	CM	BG	TD	RESUBMISSION PER REVIEW COMMENTS DATED 04/13/24
5	01/03/24	CM	BG	TD	RESUBMISSION PER REVIEW COMMENTS DATED 12/27/23

DESIGNED BY	BD
DRAWN BY	CM
CHECKED BY	TD
IN CHARGE	--
DATE	04/28/23

PROFESSIONAL ENGINEER — ELECTRICAL — #758796 — CLASS: C10 — EXPIRES: 02-28-27 — STATE OF CALIFORNIA

SAN FRANCISCO BAY AREA RAPID TRANSIT DISTRICT

SIEMENS

SIEMENS INDUSTRY, INC.
46897 BAYSIDE PARKWAY
FREMONT, CA 94538
510.293.2100
866.728.7767 (24-HR SERVICE)

STATE LIC: C-10 #758796

SUBMITTED _____ APPROVED _____

FIRE ALARM SYSTEM REPLACEMENT
PHASE 3
A30 - COLISEUM
FA-SYSTEM
IRC - INTERPOSING RELAY CABINET
DATA POINTS TO BART SCADA SYSTEM

CADD FILENAME	
F400-A30.dwg	
SIZE	SCALE
D	---
CONTRACT NO.	REV.
15IJ-130	7
AREA CODE	PAGE NO.
F400-A30	066

PLOT DATE: 11/03/2025 15:35 BY: 2004179B FILE: C:\Users\p004179b\OneDrive - Siemens AG\ECT WO\35 Documents - BOA2 FIS BART PA Replacement Phase III_4429-349594\Engineering Documents\A30 - COLISEUM SHEETS\F5\F400-A30.dwg SIZE: 8.12MB PAPER SIZE: ANSI D 22x34"

A30 - COLISEUM STATION

RECORD SET

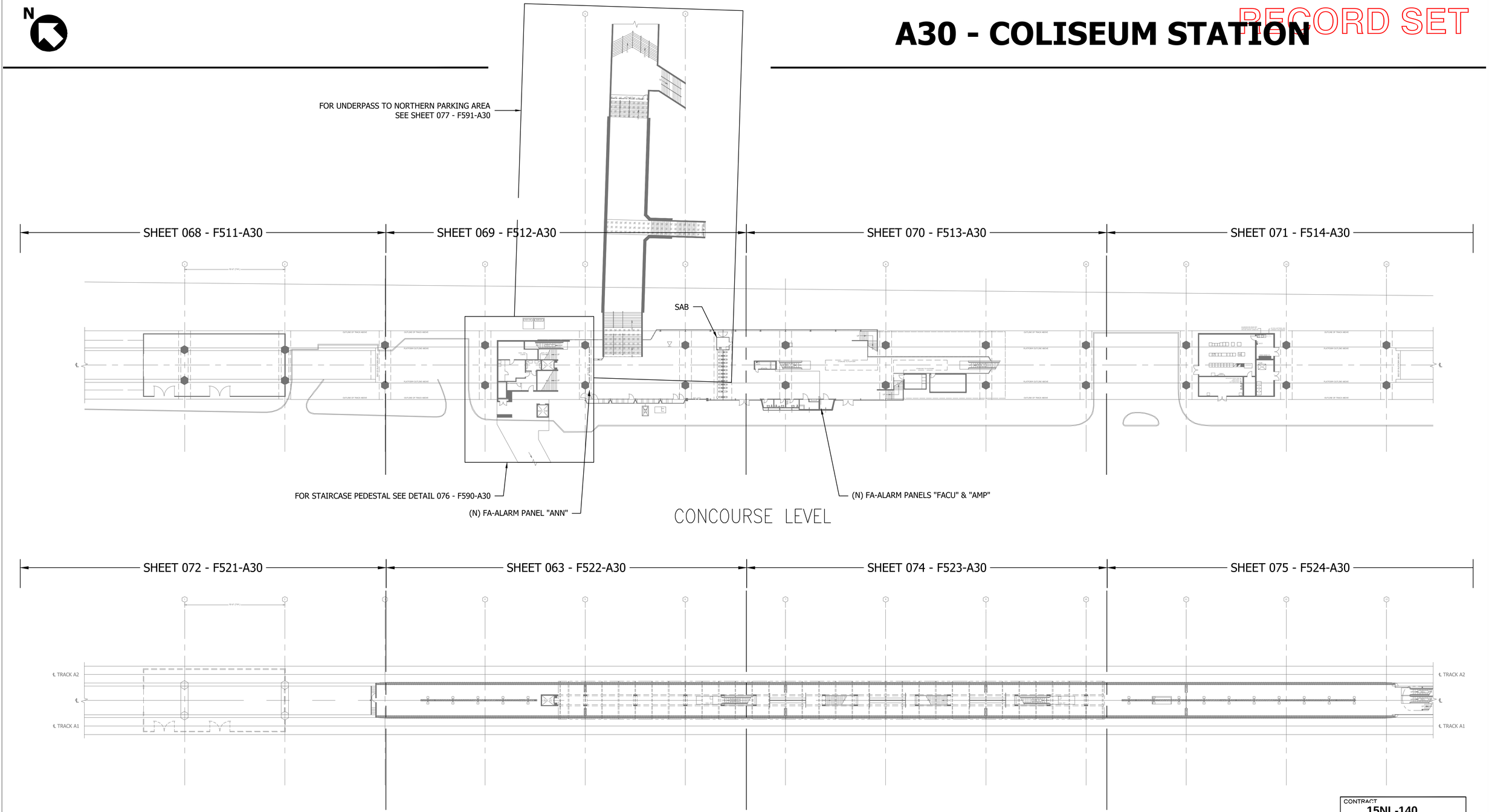

CONTRACT	
15NL-140	
CONTRACT SHEET NO.	PG. NO.
R011	092

REV	DATE	BY	SUB	APP	DESCRIPTION	REV	DATE	BY	SUB	APP	DESCRIPTION
4	12/06/23	CM	BG	TD	RESUBMISSION PER OAK AHJ COMMENTS DATED 10/24/23	9	11/03/25	SR	SR	JM	RECORD DRAWINGS (REV#2)
3	07/20/23	AG	BG	TD	RESUBMISSION PER REVIEW COMMENTS DATED 07/17/23	8	02/05/25	BG	BG	TD	RECORD DRAWINGS (REV#2)
2	06/26/23	CM	BG	TD	RESUBMISSION PER REVIEW COMMENTS DATED 06/14/23	7	07/17/24	AM	BG	TD	RECORD DRAWINGS
1	06/02/23	CM	BG	TD	INCORPORATED CHANGES PER SCHEDULE 1 REVIEW COMMENTS	6	05/21/24	CM	BG	TD	RESUBMISSION PER REVIEW COMMENTS DATED 04/13/24
0	04/28/23	CM	BG	TD	SUBMITTAL REVIEW	5	01/03/24	CM	BG	TD	RESUBMISSION PER REVIEW COMMENTS DATED 12/27/23

DESIGNED BY BD
DRAWN BY CM
CHECKED BY TD
IN CHARGE --
DATE 04/28/23

#758796 CLASS: C10 EXPIRES 02-28-27 CONTRACTOR STATE LICENSE BOARD

SAN FRANCISCO BAY AREA RAPID TRANSIT DISTRICT

SIEMENS

SIEMENS INDUSTRY, INC.
46897 BAYSIDE PARKWAY
FREMONT, CA 94538
510.293.2100
866.728.7767 (24-HR SERVICE)

STATE LIC: C-10 #758796

SUBMITTED _____ APPROVED _____

FIRE ALARM SYSTEM REPLACEMENT
PHASE 3
A30 - COLISEUM
STATION OVERVIEW

CADD FILENAME	
F500-A30.dwg	
SIZE	SCALE
D	1/32"=1'-0"
CONTRACT NO.	REV.
15IJ-130	7
AREA CODE	PAGE NO.
F500-A30	067

PLOT DATE: 11/03/2025 15:53 BY: ZIXIAN TYPE FILE: C:\Users\z0f0112p\OneDrive - Siemens AD\ECT NOO35 Documents - BOA2 FIS BART PA Replacement Phase III_4420-349994\Engineering Documents\A30 - COLISEUM SHEETS\F591-A30.dwg SIZE: 0.14MB PAPER SIZE: ANSI D 22x34"

RECORD SET

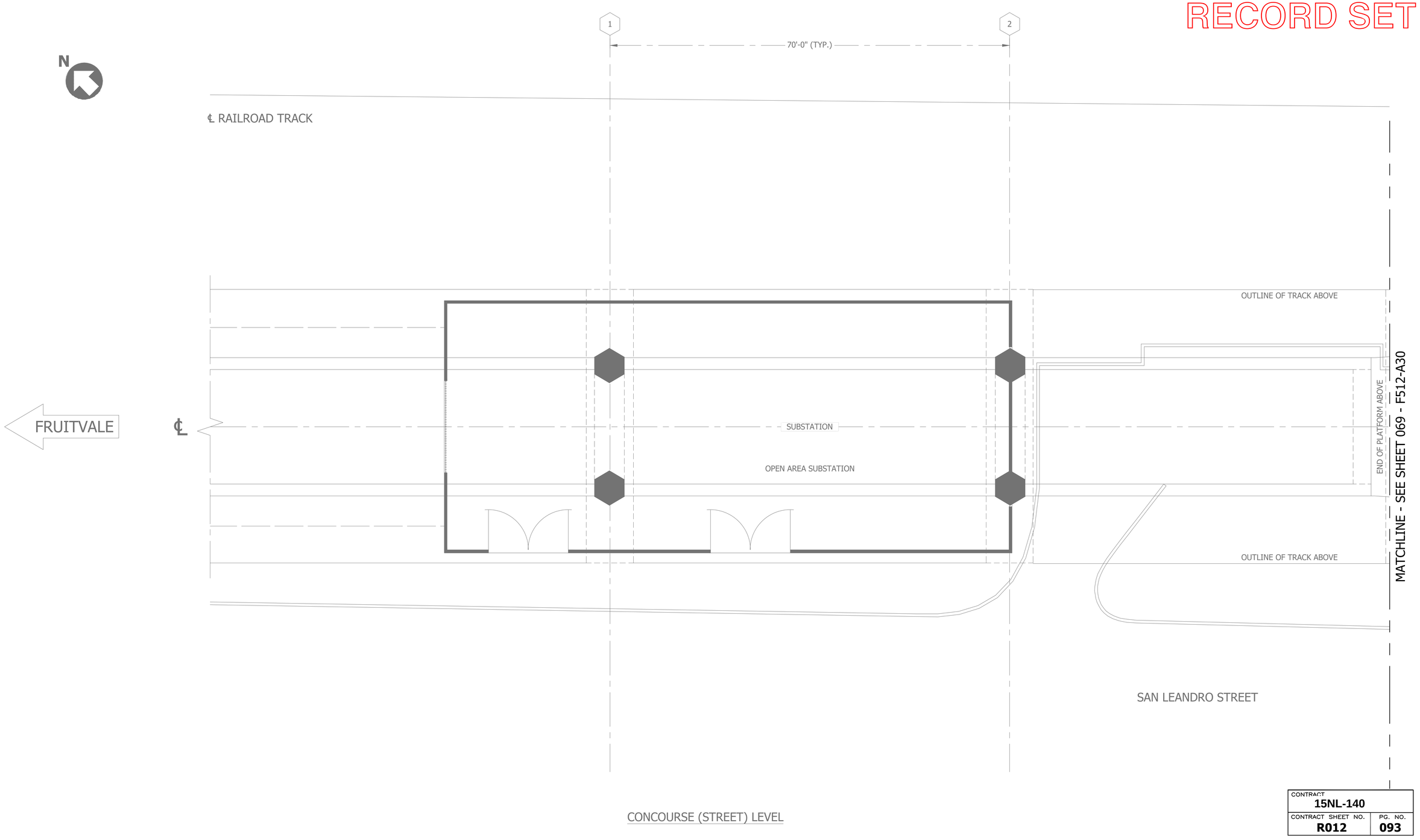

CONTRACT
15NL-140

CONTRACT SHEET NO.	PG. NO.
R012	**093**

REV	DATE	BY	SUB	APP	DESCRIPTION
4	12/06/23	CM	BG	TD	RESUBMISSION PER OAK AHJ COMMENTS DATED 10/24/23
3	07/20/23	AG	BG	TD	RESUBMISSION PER REVIEW COMMENTS DATED 07/17/23
2	06/26/23	CM	BG	TD	RESUBMISSION PER REVIEW COMMENTS DATED 06/14/23
1	06/02/23	CM	BG	TD	INCORPORATED CHANGES PER SCHEDULE 1 REVIEW COMMENTS
0	04/28/23	CM	BG	TD	SUBMITTAL REVIEW

REV	DATE	BY	SUB	APP	DESCRIPTION
9	11/03/25	SR	SR	JM	RECORD DRAWINGS (REV#2)
8	02/05/25	BG	BG	TD	RECORD DRAWINGS (REV#2)
7	07/17/24	AM	BG	TD	RECORD DRAWINGS
6	05/21/24	CM	BG	TD	RESUBMISSION PER REVIEW COMMENTS DATED 04/13/24
5	01/03/24	CM	BG	TD	RESUBMISSION PER REVIEW COMMENTS DATED 12/27/23

DESIGNED BY BD
DRAWN BY CM
CHECKED BY TD
IN CHARGE --
DATE 04/28/23

#758726 CLASS C-10 EXPIRES 02-28-27 CONTRACTOR

SAN FRANCISCO BAY AREA RAPID TRANSIT DISTRICT

SIEMENS

SIEMENS INDUSTRY, INC.
46897 BAYSIDE PARKWAY
FREMONT, CA 94538
510.293.2100
866.728.7767 (24-HR SERVICE)

STATE LIC: C-10 #758796

SUBMITTED _____ APPROVED _____

FIRE ALARM SYSTEM REPLACEMENT
PHASE 3
A30 - COLISEUM
FA-LAYOUT PLAN
CONCOURSE/STREET
SHEET 1 OF 4

CADD FILENAME F511-A30.dwg
SIZE D | SCALE 1/8"=1'-0"
CONTRACT NO. **15IJ-130** | REV. **7**
AREA CODE **F511-A30** | PAGE NO. **068**

PLOT DATE: 11/03/2025 15:33 BY: ZOHAITRI FILE: C:\Users\ARMIJAP\OneDrive - Siemens AG\BCT NOCOS Documents - BCKA FIS BART FA Replacement Phase III_44GP-3499549\Engineering Documents\A30 - COLISEUM SHEETS\BTS\F511-A30.dwg SIZE: 6.13MB PAPER SIZE: ANSI D 22x34"

RECORD SET

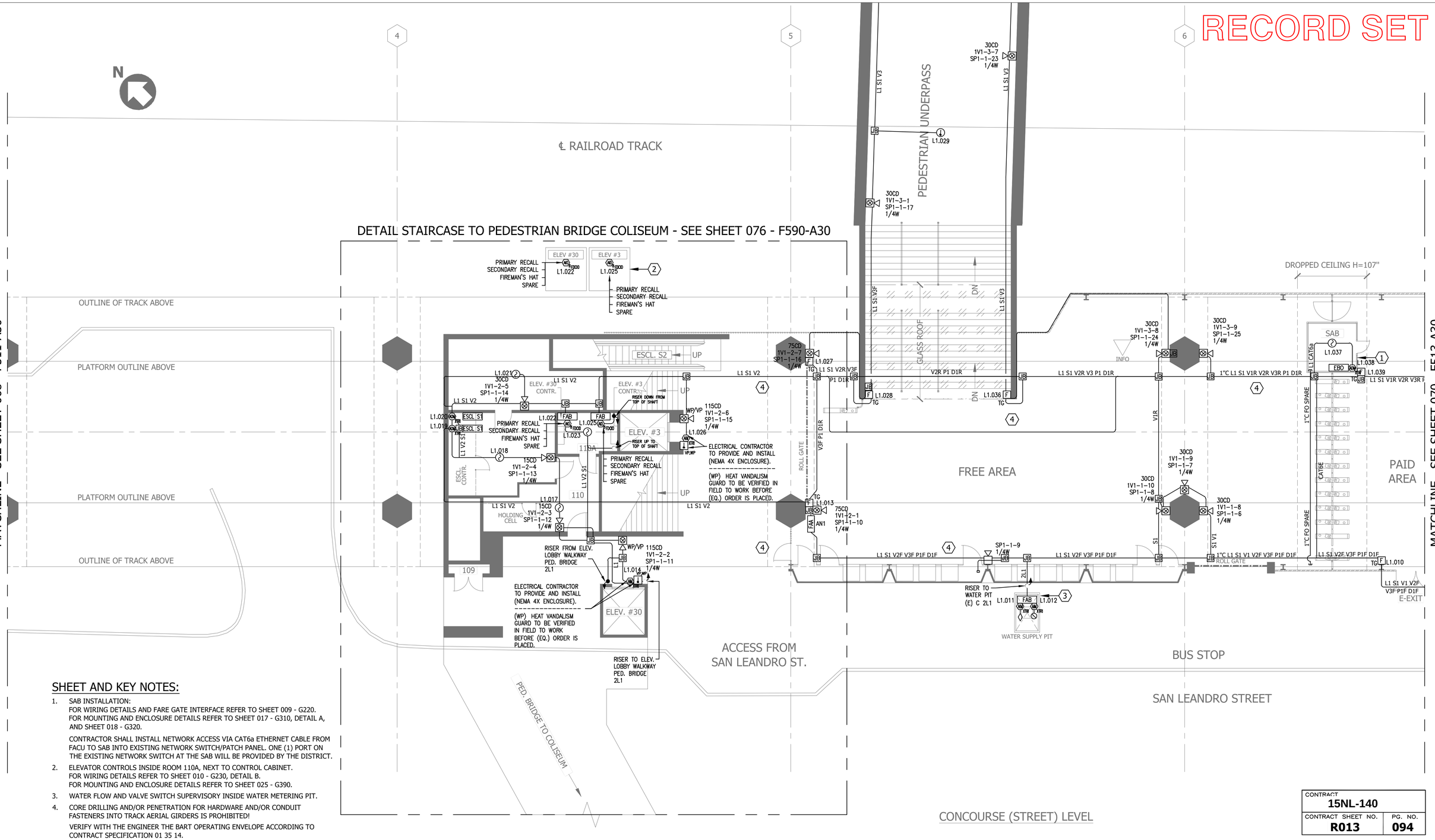

SHEET AND KEY NOTES:

1. SAB INSTALLATION:
   FOR WIRING DETAILS AND FARE GATE INTERFACE REFER TO SHEET 009 - G220.
   FOR MOUNTING AND ENCLOSURE DETAILS REFER TO SHEET 017 - G310, DETAIL A, AND SHEET 018 - G320.

   CONTRACTOR SHALL INSTALL NETWORK ACCESS VIA CAT6a ETHERNET CABLE FROM FACU TO SAB INTO EXISTING NETWORK SWITCH/PATCH PANEL. ONE (1) PORT ON THE EXISTING NETWORK SWITCH AT THE SAB WILL BE PROVIDED BY THE DISTRICT.
2. ELEVATOR CONTROLS INSIDE ROOM 110A, NEXT TO CONTROL CABINET.
   FOR WIRING DETAILS REFER TO SHEET 010 - G230, DETAIL B.
   FOR MOUNTING AND ENCLOSURE DETAILS REFER TO SHEET 025 - G390.
3. WATER FLOW AND VALVE SWITCH SUPERVISORY INSIDE WATER METERING PIT.
4. CORE DRILLING AND/OR PENETRATION FOR HARDWARE AND/OR CONDUIT FASTENERS INTO TRACK AERIAL GIRDERS IS PROHIBITED!
   VERIFY WITH THE ENGINEER THE BART OPERATING ENVELOPE ACCORDING TO CONTRACT SPECIFICATION 01 35 14.

CONTRACT	
15NL-140	
CONTRACT SHEET NO. R013	PG. NO. 094

REV	DATE	BY	SUB	APP	DESCRIPTION	REV	DATE	BY	SUB	APP	DESCRIPTION
4	12/06/23	CM	BG	TD	RESUBMISSION PER OAK AHJ COMMENTS DATED 10/24/23	9	11/03/25	SR	SR	JM	RECORD DRAWINGS (REV#2)
3	07/20/23	AG	BG	TD	RESUBMISSION PER REVIEW COMMENTS DATED 07/17/23	8	02/05/25	BG	BG	TD	RECORD DRAWINGS (REV#2)
2	06/26/23	CM	BG	TD	RESUBMISSION PER REVIEW COMMENTS DATED 06/14/23	7	07/17/24	AM	BG	TD	RECORD DRAWINGS
1	06/02/23	CM	BG	TD	INCORPORATED CHANGES PER SCHEDULE 1 REVIEW COMMENTS	6	05/21/24	CM	BG	TD	RESUBMISSION PER REVIEW COMMENTS DATED 04/13/24
0	04/28/23	CM	BG	TD	SUBMITTAL REVIEW	5	01/03/24	CM	BG	TD	RESUBMISSION PER REVIEW COMMENTS DATED 12/27/23

DESIGNED BY BD
DRAWN BY CM
CHECKED BY TD
IN CHARGE –
DATE 04/28/23

STATE OF CALIFORNIA #758796 CLASS: C10 EXPIRES: 02-28-27 ELECTRICAL CONTRACTOR

SAN FRANCISCO BAY AREA RAPID TRANSIT DISTRICT

SIEMENS

SIEMENS INDUSTRY, INC.
46897 BAYSIDE PARKWAY
FREMONT, CA 94538
510.293.2100
866.728.7767 (24-HR SERVICE)
STATE LIC: C-10 #758796

SUBMITTED _____ APPROVED _____

FIRE ALARM SYSTEM REPLACEMENT
PHASE 3
A30 - COLISEUM
FA-LAYOUT PLAN
CONCOURSE/STREET
SHEET 2 OF 4

CADD FILENAME F512-A30.dwg	
SIZE D	SCALE 1/8"=1'-0"
CONTRACT NO. 15IJ-130	REV. 7
AREA CODE F512-A30	PAGE NO. 069

PLOT DATE: 11/03/2025 10:31 BY: ZDAHTPB FILE: C:\Users\pDAHtpb\OneDrive - Siemens AG\BCT MOD\Documents - BCA2 ITS BART FA Replacement Phase III_44GP-34995#\Engineering Documents\A30 - COLISEUM SHEETSET\SP512-A30.dwg SIZE: E1-HRB PAPER SIZE: ANSI D 22x34"

RECORD SET

MATCHLINE - SEE SHEET 059 - F512-A30

MATCHLINE - SEE SHEET 071 - F514-A30

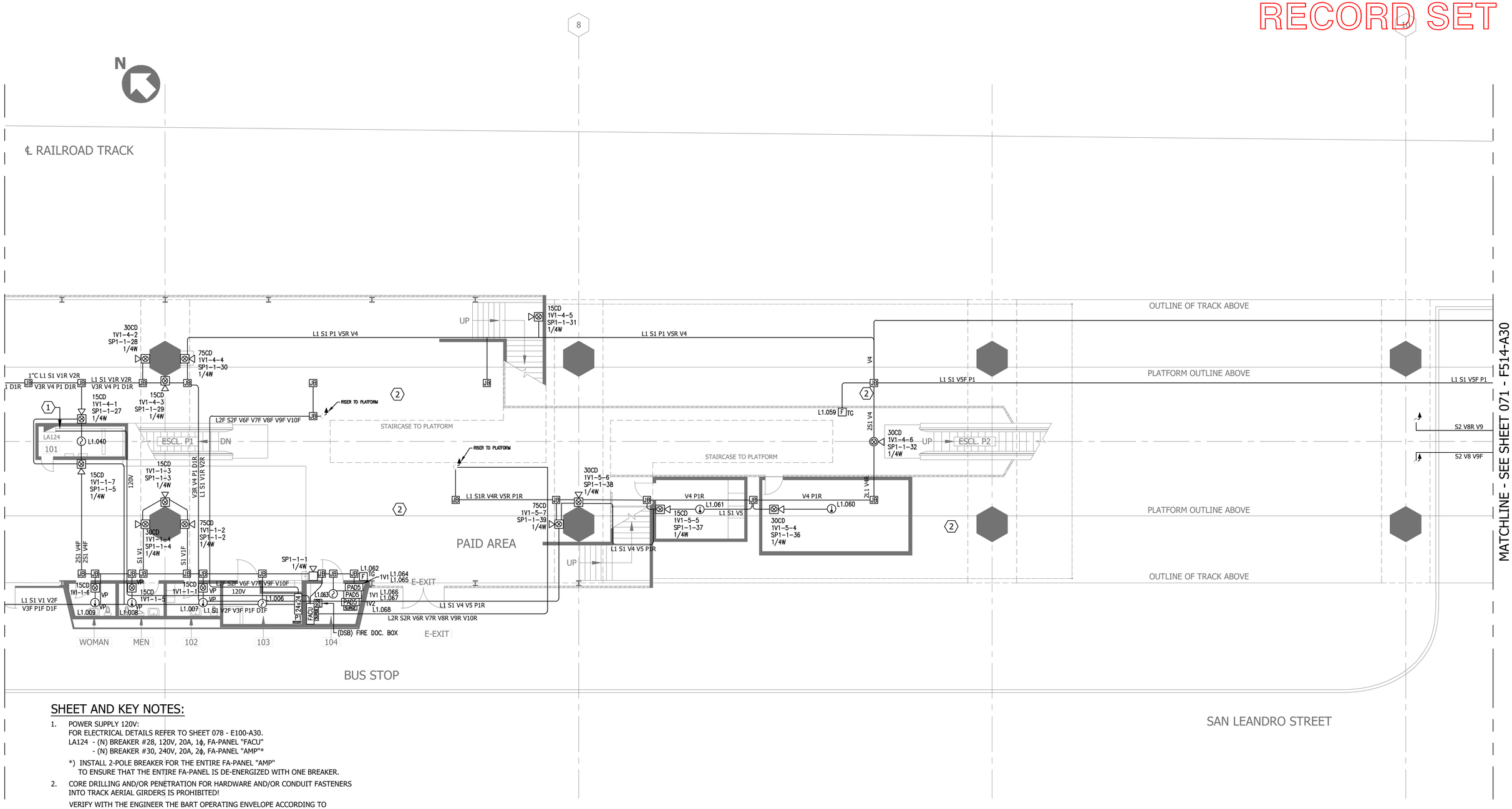

SHEET AND KEY NOTES:

1. POWER SUPPLY 120V:
   FOR ELECTRICAL DETAILS REFER TO SHEET 078 - E100-A30.
   LA124 - (N) BREAKER #28, 120V, 20A, 1ϕ, FA-PANEL "FACU"
   - (N) BREAKER #30, 240V, 20A, 2ϕ, FA-PANEL "AMP"*
   *) INSTALL 2-POLE BREAKER FOR THE ENTIRE FA-PANEL "AMP"
   TO ENSURE THAT THE ENTIRE FA-PANEL IS DE-ENERGIZED WITH ONE BREAKER.
2. CORE DRILLING AND/OR PENETRATION FOR HARDWARE AND/OR CONDUIT FASTENERS INTO TRACK AERIAL GIRDERS IS PROHIBITED!
   VERIFY WITH THE ENGINEER THE BART OPERATING ENVELOPE ACCORDING TO CONTRACT
   SPECIFICATION 01 35 14.

CONTRACT	
15NL-140	
CONTRACT SHEET NO.	PG. NO.
R014	095

REV	DATE	BY	SUB	APP	DESCRIPTION
4	12/06/23	CM	BG	TD	RESUBMISSION PER OAK AHJ COMMENTS DATED 10/24/23
3	07/20/23	AG	BG	TD	RESUBMISSION PER REVIEW COMMENTS DATED 07/17/23
2	06/26/23	CM	BG	TD	RESUBMISSION PER REVIEW COMMENTS DATED 06/14/23
1	06/02/23	CM	BG	TD	INCORPORATED CHANGES PER SCHEDULE 1 REVIEW COMMENTS
0	04/28/23	CM	BG	TD	SUBMITTAL REVIEW
9	11/03/25	SR	SR	JM	RECORD DRAWINGS (REV#2)
8	02/05/25	BG	BG	TD	RECORD DRAWINGS (REV#2)
7	07/17/24	AM	BG	TD	RECORD DRAWINGS
6	05/21/24	CM	BG	TD	RESUBMISSION PER REVIEW COMMENTS DATED 04/13/24
5	01/03/24	CM	BG	TD	RESUBMISSION PER REVIEW COMMENTS DATED 12/27/23

DESIGNED BY BD
DRAWN BY CM
CHECKED BY TD
IN CHARGE --
DATE 04/28/23

STATE OF CALIFORNIA #79879 CLASS: C10/A CONTRACTOR EXPIRES: 02-28-27

SAN FRANCISCO BAY AREA RAPID TRANSIT DISTRICT

SIEMENS

SIEMENS INDUSTRY, INC.
46897 BAYSIDE PARKWAY
FREMONT, CA 94538
510.293.2100
866.728.7767 (24-HR SERVICE)
STATE LIC: C-10 #758796

SUBMITTED _____ APPROVED _____

FIRE ALARM SYSTEM REPLACEMENT
PHASE 3
A30 - COLISEUM
FA-LAYOUT PLAN
CONCOURSE/STREET
SHEET 3 OF 4

CADD FILENAME	
F513-A30.dwg	
SIZE D	SCALE 1/8"=1'-0"
CONTRACT NO. 15IJ-130	REV. 7
AREA CODE F513-A30	PAGE NO. 070

PLOT DATE: 11/07/2025 15:31 BY: ZOOM1TPB FILE: C:\Users\z0041tpb\OneDrive - Siemens AG\BCT MCOS5 Documents - BCA2 FIS BART FA Replacement Phase III_4409-34995\Engineering Documents\A30 - COLISEUM SHEETSETS\F513-A30.dwg SIZE: 6.14MB PAPER SIZE: ANSI D 22x34"

RECORD SET

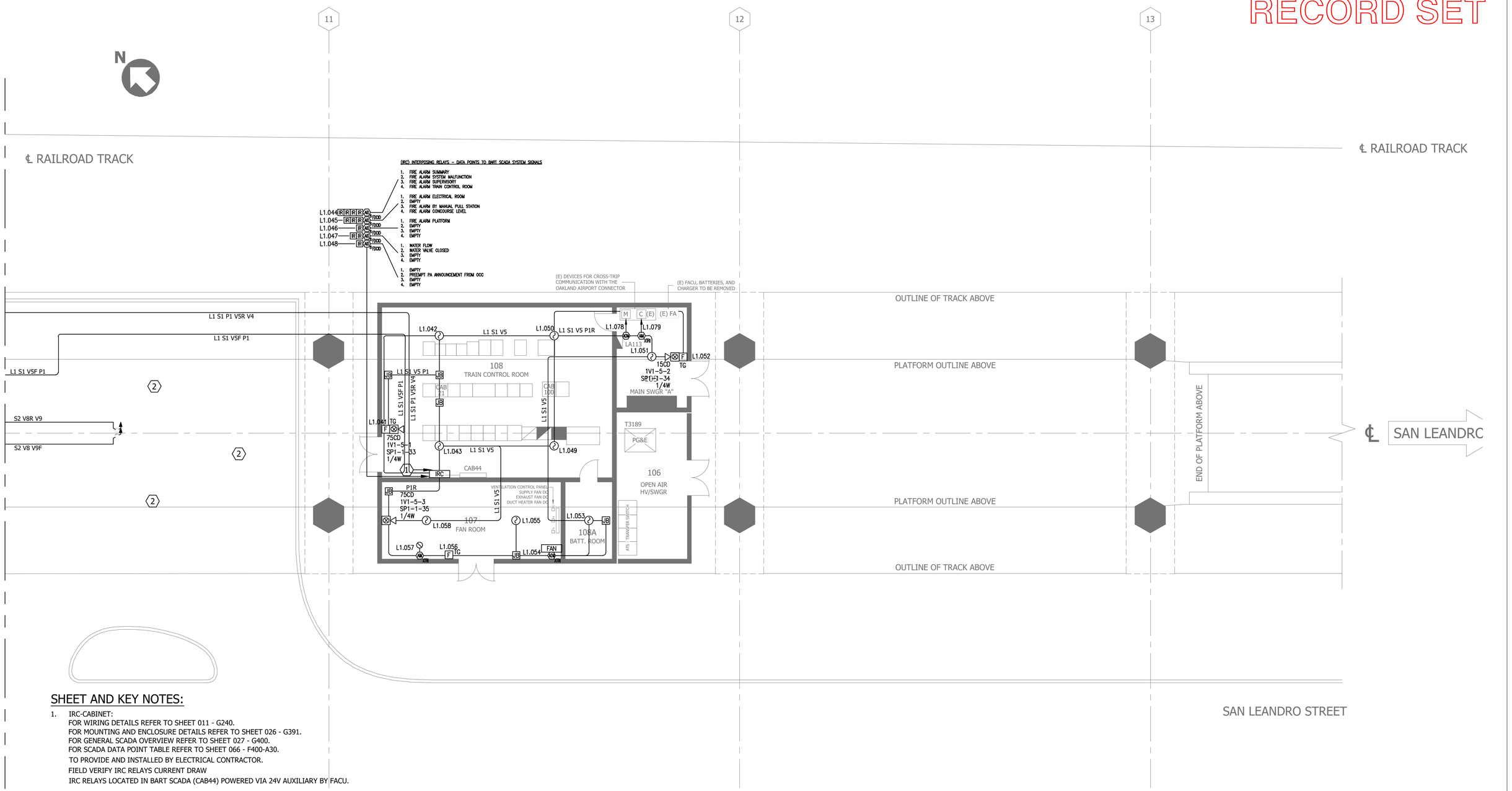

SHEET AND KEY NOTES:

1. IRC-CABINET:
   FOR WIRING DETAILS REFER TO SHEET 011 - G240.
   FOR MOUNTING AND ENCLOSURE DETAILS REFER TO SHEET 026 - G391.
   FOR GENERAL SCADA OVERVIEW REFER TO SHEET 027 - G400.
   FOR SCADA DATA POINT TABLE REFER TO SHEET 066 - F400-A30.
   TO PROVIDE AND INSTALLED BY ELECTRICAL CONTRACTOR.
   FIELD VERIFY IRC RELAYS CURRENT DRAW
   IRC RELAYS LOCATED IN BART SCADA (CAB44) POWERED VIA 24V AUXILIARY BY FACU.

2. CORE DRILLING AND/OR PENETRATION FOR HARDWARE AND/OR CONDUIT FASTENERS INTO TRACK AERIAL GIRDERS IS PROHIBITED!
   VERIFY WITH THE ENGINEER THE BART OPERATING ENVELOPE ACCORDING TO CONTRACT SPECIFICATION 01 35 14.

CONCOURSE (STREET) LEVEL

CONTRACT	
15NL-140	
CONTRACT SHEET NO.	PG. NO.
R015	096

REV	DATE	BY	SUB	APP	DESCRIPTION	REV	DATE	BY	SUB	APP	DESCRIPTION
4	12/06/23	CM	BG	TD	RESUBMISSION PER OAK AHJ COMMENTS DATED 10/24/23	9	11/03/25	SR	SR	JM	RECORD DRAWINGS (REV#2)
3	07/20/23	AG	BG	TD	RESUBMISSION PER REVIEW COMMENTS DATED 07/17/23	8	02/05/25	BG	BG	TD	RECORD DRAWINGS (REV#2)
2	06/26/23	CM	BG	TD	RESUBMISSION PER REVIEW COMMENTS DATED 06/14/23	7	07/17/24	AM	BG	TD	RECORD DRAWINGS
1	06/02/23	CM	BG	TD	INCORPORATED CHANGES PER SCHEDULE 1 REVIEW COMMENTS	6	05/21/24	CM	BG	TD	RESUBMISSION PER REVIEW COMMENTS DATED 04/13/24
0	04/28/23	CM	BG	TD	SUBMITTAL REVIEW	5	01/03/24	CM	BG	TD	RESUBMISSION PER REVIEW COMMENTS DATED 12/27/23

DESIGNED BY BD
DRAWN BY CM
CHECKED BY TD
IN CHARGE –
DATE 04/28/23

LICENSED BUILDING TECHNOLOGY CONSULTANT #758796 CLASS: CBO EXPIRES: 02-28-25 STATE OF CALIFORNIA

SAN FRANCISCO BAY AREA RAPID TRANSIT DISTRICT

SIEMENS

SIEMENS INDUSTRY, INC.
46897 BAYSIDE PARKWAY
FREMONT, CA 94538
510.293.2100
866.728.7767 (24-HR SERVICE)
STATE LIC: C-10 #758796

SUBMITTED _____ APPROVED _____

FIRE ALARM SYSTEM REPLACEMENT
PHASE 3
A30 - COLISEUM
FA-LAYOUT PLAN
CONCOURSE/STREET
SHEET 4 OF 4

CADD FILENAME	
F514-A30.dwg	
SIZE	SCALE
D	1/8"=1'-0"
CONTRACT NO.	REV.
15IJ-130	7
AREA CODE	PAGE NO.
F514-A30	071

PLOT DATE: 11/03/2025 10:31 BY: ZIXHITPAI FILE: C:\Users\p004102p\OneDrive - Siemens AG\BCAT AG\CAD Documents - BCAT FIS BART FA Replacement Phase III_4404\P-34995#\Engineering Documents\A30 - COLISEUM SHEETS\F514-A30.dwg SIZE: E-ARB PAPER SIZE: ANSI D 22x34

RECORD SET

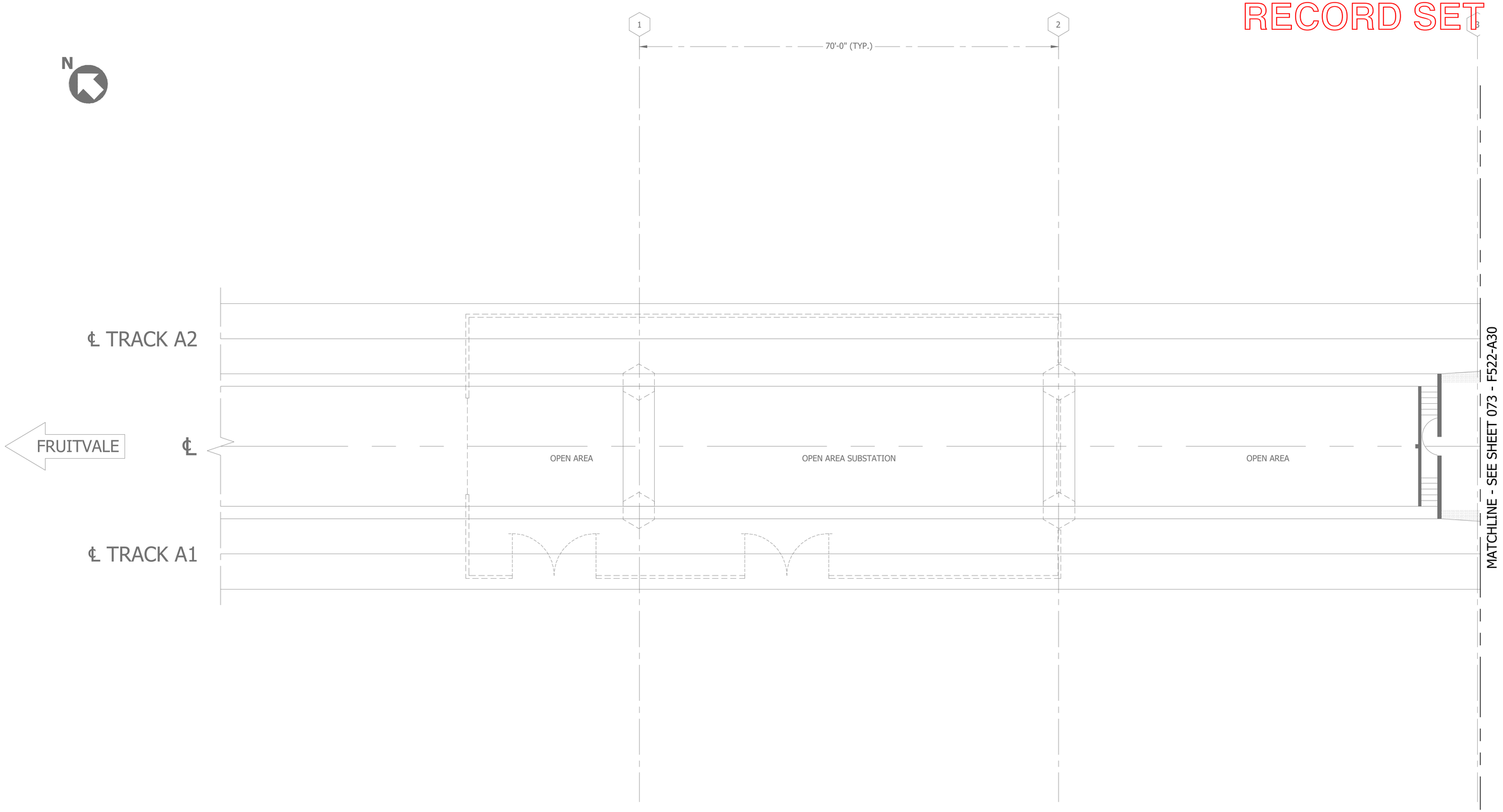

PLATFORM LEVEL

CONTRACT	
15NL-140	
CONTRACT SHEET NO.	PG. NO.
R016	097

REV	DATE	BY	SUB	APP	DESCRIPTION	REV	DATE	BY	SUB	APP	DESCRIPTION
4	12/06/23	CM	BG	TD	RESUBMISSION PER OAK AHJ COMMENTS DATED 10/24/23	9	11/03/25	SR	SR	JM	RECORD DRAWINGS (REV#2)
3	07/20/23	AG	BG	TD	RESUBMISSION PER REVIEW COMMENTS DATED 07/17/23	8	02/05/25	BG	BG	TD	RECORD DRAWINGS (REV#2)
2	06/26/23	CM	BG	TD	RESUBMISSION PER REVIEW COMMENTS DATED 06/14/23	7	07/17/24	AM	BG	TD	RECORD DRAWINGS
1	06/02/23	CM	BG	TD	INCORPORATED CHANGES PER SCHEDULE 1 REVIEW COMMENTS	6	05/21/24	CM	BG	TD	RESUBMISSION PER REVIEW COMMENTS DATED 04/13/24
0	04/28/23	CM	BG	TD	SUBMITTAL REVIEW	5	01/03/24	CM	BG	TD	RESUBMISSION PER REVIEW COMMENTS DATED 12/27/23

DESIGNED BY BD
DRAWN BY CM
CHECKED BY TD
IN CHARGE --
DATE 04/28/23

CONTRACTOR'S STATE LICENSE BOARD #758796 CLASS: C10 C7 EXPIRES 02-28-27

SAN FRANCISCO BAY AREA RAPID TRANSIT DISTRICT

SIEMENS

SIEMENS INDUSTRY, INC.
46897 BAYSIDE PARKWAY
FREMONT, CA 94538
510.293.2100
866.728.7767 (24-HR SERVICE)

STATE LIC: C-10 #758796

SUBMITTED _____ APPROVED _____

FIRE ALARM SYSTEM REPLACEMENT
PHASE 3
A30 - COLISEUM
FA-LAYOUT PLAN
PLATFORM
SHEET 1 OF 4

CADD FILENAME	
F521-A30.dwg	
SIZE	SCALE
D	1/8"=1'-0"
CONTRACT NO.	REV.
15IJ-130	7
AREA CODE	PAGE NO.
F521-A30	072

PLOT DATE: 11/03/2025 15:52 BY: ZIXIAYTPB FILE: C:\Users\pf041tpb\OneDrive - Siemens AD\ECT NOCI\5 Documents - BOA2 FIS BART FA Replacement Phase III_4439-349994\Engineering Documents\A30 - COLISEUM SHEETS\F521-A30.dwg SIZE: 8.13MB PAPER SIZE: ANSI D (24.0"

RECORD SET

MATCHLINE - SEE SHEET 072 - F521-A30

MATCHLINE - SEE SHEET 074 - F523-A30

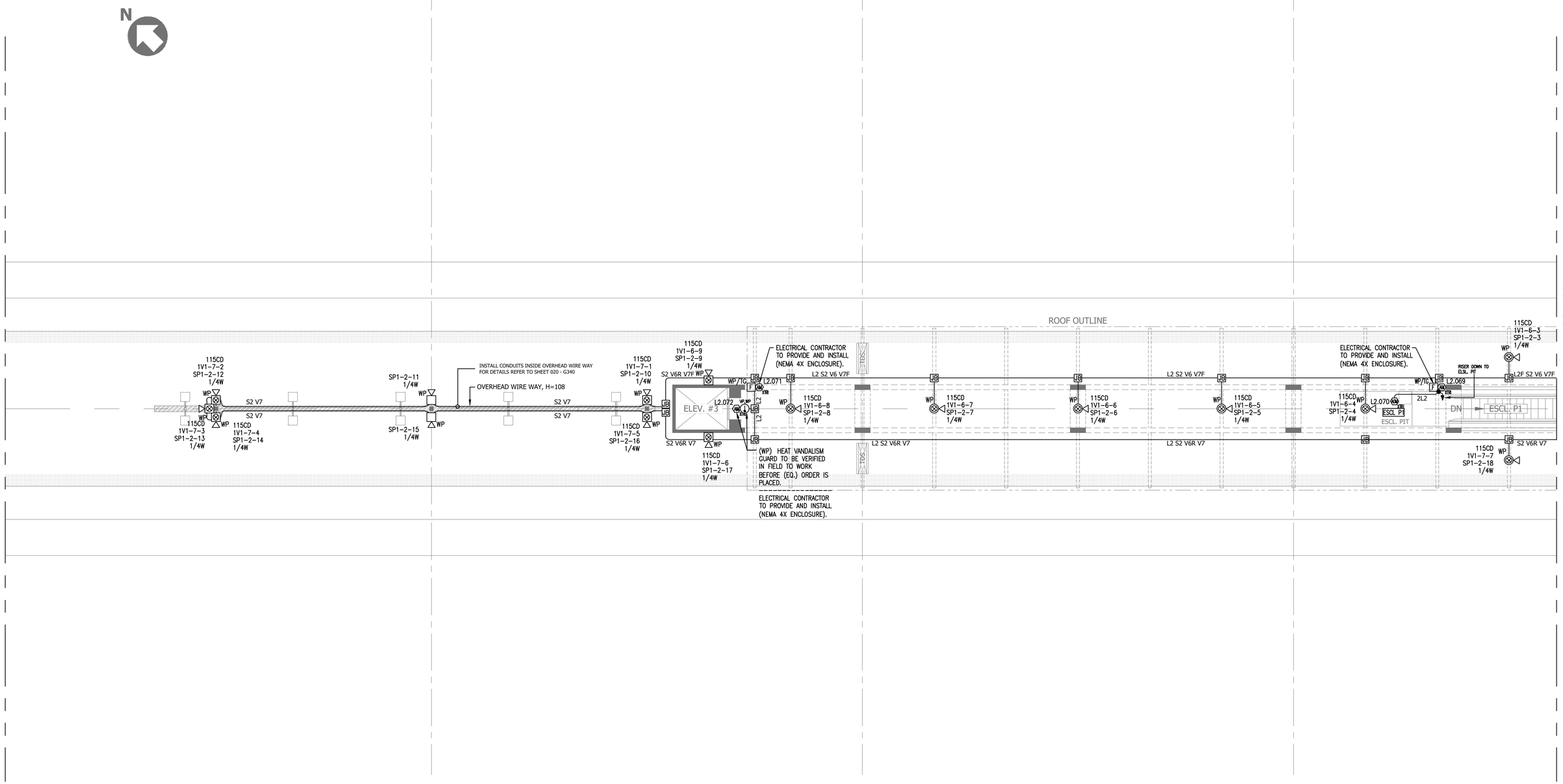

CONTRACT	
15NL-140	
CONTRACT SHEET NO.	PG. NO.
R017	098

REV	DATE	BY	SUB	APP	DESCRIPTION
4	12/06/23	CM	BG	TD	RESUBMISSION PER OAK AHJ COMMENTS DATED 10/24/23
3	07/20/23	AG	BG	TD	RESUBMISSION PER REVIEW COMMENTS DATED 07/17/23
2	06/26/23	CM	BG	TD	RESUBMISSION PER REVIEW COMMENTS DATED 06/14/23
1	06/02/23	CM	BG	TD	INCORPORATED CHANGES PER SCHEDULE 1 REVIEW COMMENTS
0	04/28/23	CM	BG	TD	SUBMITTAL REVIEW
9	11/03/25	SR	SR	JM	RECORD DRAWINGS (REV#2)
8	02/05/25	BG	BG	TD	RECORD DRAWINGS (REV#2)
7	07/17/24	AM	BG	TD	RECORD DRAWINGS
6	05/21/24	CM	BG	TD	RESUBMISSION PER REVIEW COMMENTS DATED 04/13/24
5	01/03/24	CM	BG	TD	RESUBMISSION PER REVIEW COMMENTS DATED 12/27/23

DESIGNED BY BD
DRAWN BY CM
CHECKED BY TD
IN CHARGE –
DATE 04/28/23

#758796 CLASS: C10 EXPIRES: 02-28-27 CONTRACTOR LICENSE BOARD

SAN FRANCISCO BAY AREA RAPID TRANSIT DISTRICT

SIEMENS

SIEMENS INDUSTRY, INC.
46897 BAYSIDE PARKWAY
FREMONT, CA 94538
510.293.2100
866.728.7767 (24-HR SERVICE)

STATE LIC: C-10 #758796

SUBMITTED _____ APPROVED _____

FIRE ALARM SYSTEM REPLACEMENT
PHASE 3
A30 - COLISEUM
FA-LAYOUT PLAN
PLATFORM
SHEET 2 OF 4

CADD FILENAME	
F522-A30.dwg	
SIZE	SCALE
D	1/8"=1'-0"
CONTRACT NO.	REV.
15IJ-130	7
AREA CODE	PAGE NO.
F522-A30	073

PLOT DATE: 11/03/2025 10:53 BY: ZIXIN TAN FILE: C:\Users\z004tt2d\OneDrive - Siemens AG\BCT ADCUS Documents - BCA2 ITS BART FA Replacement Phase III_4HDP-3499549\Engineering Documents\A30 - COLISEUM SHEETS\F522-A30.dwg SIZE: 61.4MB PAPER SIZE: ANSI D (24.0"

RECORD SET

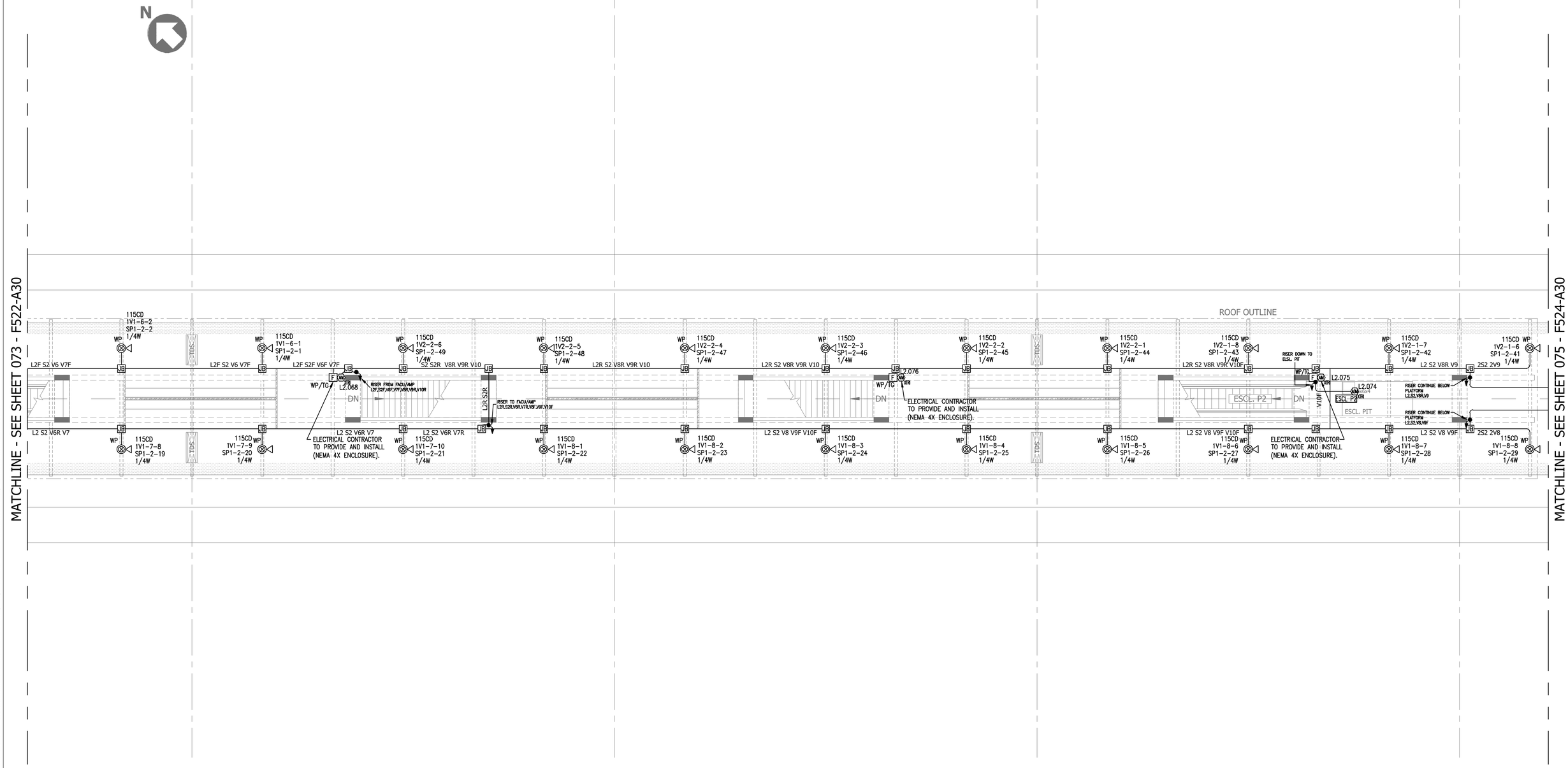

PLATFORM LEVEL

CONTRACT	
15NL-140	
CONTRACT SHEET NO.	PG. NO.
R018	099

REV	DATE	BY	SUB	APP	DESCRIPTION
4	12/06/23	CM	BG	TD	RESUBMISSION PER OAK AHJ COMMENTS DATED 10/24/23
3	07/20/23	AG	BG	TD	RESUBMISSION PER REVIEW COMMENTS DATED 07/17/23
2	06/26/23	CM	BG	TD	RESUBMISSION PER REVIEW COMMENTS DATED 06/14/23
1	06/02/23	CM	BG	TD	INCORPORATED CHANGES PER SCHEDULE 1 REVIEW COMMENTS
0	04/28/23	CM	BG	TD	SUBMITTAL REVIEW

REV	DATE	BY	SUB	APP	DESCRIPTION
9	11/03/25	SR	SR	JM	RECORD DRAWINGS (REV#2)
8	02/05/25	BG	BG	TD	RECORD DRAWINGS (REV#2)
7	07/17/24	AM	BG	TD	RECORD DRAWINGS
6	05/21/24	CM	BG	TD	RESUBMISSION PER REVIEW COMMENTS DATED 04/13/24
5	01/03/24	CM	BG	TD	RESUBMISSION PER REVIEW COMMENTS DATED 12/27/23

DESIGNED BY	BD
DRAWN BY	CM
CHECKED BY	TD
IN CHARGE	--
DATE	04/28/23

STATE OF CALIFORNIA · BUREAU OF BUILDING TECHNOLOGIES · ACTIVE · #758796 CLASS: C10 EXPIRES 02-28-27

SAN FRANCISCO BAY AREA RAPID TRANSIT DISTRICT

SIEMENS

SIEMENS INDUSTRY, INC.
46897 BAYSIDE PARKWAY
FREMONT, CA 94538
510.293.2100
866.728.7767 (24-HR SERVICE)

STATE LIC: C-10 #758796

SUBMITTED _____ APPROVED _____

FIRE ALARM SYSTEM REPLACEMENT
PHASE 3
A30 - COLISEUM
FA-LAYOUT PLAN
PLATFORM
SHEET 3 OF 4

CADD FILENAME	
F523-A30.dwg	
SIZE	SCALE
D	1/8"=1'-0"
CONTRACT NO.	REV.
15IJ-130	7
AREA CODE	PAGE NO.
F523-A30	074

PLOT DATE: 11/03/2025 15:53 BY: ZXH4TPB FILE: C:\Users\zXH4TPB\OneDrive - Siemens AG\ECT NGO16 Documents - BO42 FIS BART PA Replacement Phase III_44QH-3499944\Engineering Documents\A30 - COLISEUM SHEETSET\SF523-A30.dwg SIZE: 6 (ARCH D) PAPER SIZE: ANSI D 22x34"

RECORD SET

11 12 13

N

MATCHLINE - SEE SHEET 074 - F523-A30

℄ TRACK A2

℄ SAN LEANDRO

℄ TRACK A1

L2 S2 V8R V9
L2 S2 V8 V9F
WP
115CD 1V2-1-5 SP1-2-40 1/4W
115CD 1V1-8-9 SP1-2-30 1/4W
(2) C TRANSITION FROM PLATFORM TO PLATFORM WIRE WAY, INSTALL ALONG PLATFORM STRUCTURE
L2 S2 V8R V9
L2 S2 V8 V9F
SP1-2-39 1/4W
SP1-2-31 1/4W
TOS
TYP: INSTALL ABOVE THE WIRE WAY FOR DETAILS REFER TO SHEET 020 - G340
OVERHEAD WIRE WAY, H=108
115CD 1V2-1-4 SP1-2-38 1/4W
115CD 1V1-8-10 SP1-2-32 1/4W
SP1-2-37 1/4W
SP1-2-33 1/4W
L2 S2 V8R V9
L2 S2 V8R V9F
115CD 1V2-1-3 SP1-2-36 1/4W
L2.073
F
WP/TG
ELECTRICAL CONTRACTOR TO PROVIDE AND INSTALL (NEMA 4X ENCLOSURE).
115CD 1V2-1-2 SP1-2-35 1/4W
115CD 1V2-1-1 SP1-2-34 1/4W
UP
ESCL.
ACCESS TO AIRPORT SHUTTLE

PLATFORM LEVEL

CONTRACT 15NL-140
CONTRACT SHEET NO. R019
PG. NO. 100

REV	DATE	BY	SUB	APP	DESCRIPTION	REV	DATE	BY	SUB	APP	DESCRIPTION
4	12/06/23	CM	BG	TD	RESUBMISSION PER OAK AHJ COMMENTS DATED 10/24/23	9	11/03/25	SR	SR	JM	RECORD DRAWINGS (REV#2)
3	07/20/23	AG	BG	TD	RESUBMISSION PER REVIEW COMMENTS DATED 07/17/23	8	02/05/25	BG	BG	TD	RECORD DRAWINGS (REV#2)
2	06/26/23	CM	BG	TD	RESUBMISSION PER REVIEW COMMENTS DATED 06/14/23	7	07/17/24	AM	BG	TD	RECORD DRAWINGS
1	06/02/23	CM	BG	TD	INCORPORATED CHANGES PER SCHEDULE 1 REVIEW COMMENTS	6	05/21/24	CM	BG	TD	RESUBMISSION PER REVIEW COMMENTS DATED 04/13/24
0	04/28/23	CM	BG	TD	SUBMITTAL REVIEW	5	01/03/24	CM	BG	TD	RESUBMISSION PER REVIEW COMMENTS DATED 12/27/23

DESIGNED BY BD
DRAWN BY CM
CHECKED BY TD
IN CHARGE --
DATE 04/28/23

#758796 CLASS: C-10 EXPIRES: 02-28-27 CONTRACTOR

SAN FRANCISCO BAY AREA RAPID TRANSIT DISTRICT

SIEMENS

SIEMENS INDUSTRY, INC.
46897 BAYSIDE PARKWAY
FREMONT, CA 94538
510.293.2100
866.728.7767 (24-HR SERVICE)

STATE LIC: C-10 #758796

SUBMITTED _____ APPROVED _____

FIRE ALARM SYSTEM REPLACEMENT
PHASE 3
A30 - COLISEUM
FA-LAYOUT PLAN
PLATFORM
SHEET 4 OF 4

CADD FILENAME F524-A30.dwg
SIZE D | SCALE 1/8"=1'-0"
CONTRACT NO. **15IJ-130** | REV. **7**
AREA CODE **F524-A30** | PAGE NO. **075**

PLOT DATE: 11/03/2025 15:33 BY: 2004179B FILE: C:\Users\d0411pb\OneDrive - Siemens AG\SECT NOC\35 Documents - BOA2 FIS BART FA Replacement Phase III_4439-349594\Engineering Documents\A30 - COLISEUM SHEETS\F523\F524-A30.dwg SIZE: D (24.0")

RECORD SET

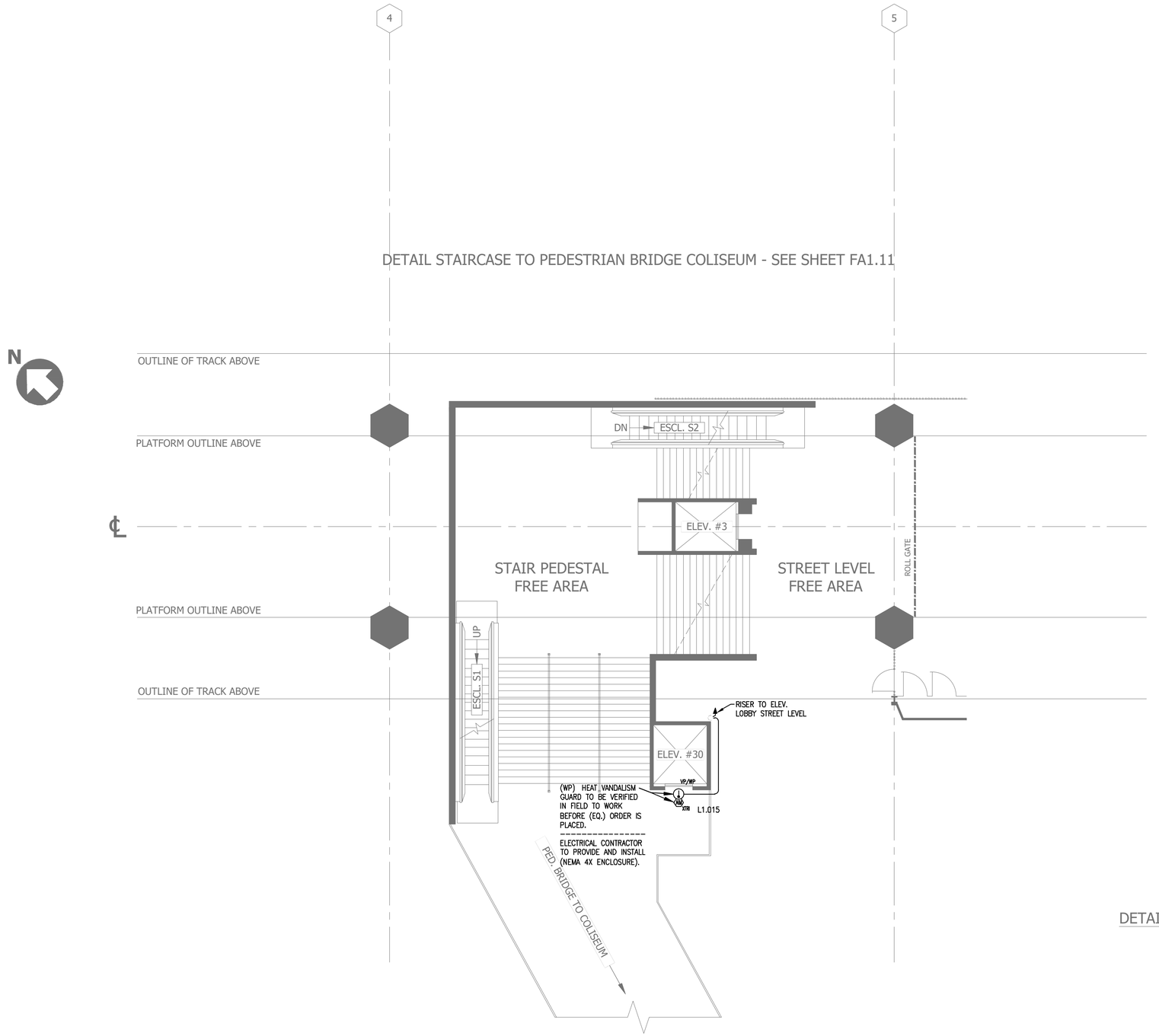

CONCOURSE (STREET) LEVEL

DETAIL STAIRCASE TO PEDESTRIAN BRIDGE TO COLISEUM

CONTRACT	
15NL-140	
CONTRACT SHEET NO.	PG. NO.
R020	101

REV	DATE	BY	SUB	APP	DESCRIPTION	REV	DATE	BY	SUB	APP	DESCRIPTION
4	12/06/23	CM	BG	TD	RESUBMISSION PER OAK AHJ COMMENTS DATED 10/24/23	9	11/03/25	SR	SR	JM	RECORD DRAWINGS (REV#2)
3	07/20/23	AG	BG	TD	RESUBMISSION PER REVIEW COMMENTS DATED 07/17/23	8	02/05/25	BG	BG	TD	RECORD DRAWINGS (REV#2)
2	06/26/23	CM	BG	TD	RESUBMISSION PER REVIEW COMMENTS DATED 06/14/23	7	07/17/24	AM	BG	TD	RECORD DRAWINGS
1	06/02/23	CM	BG	TD	INCORPORATED CHANGES PER SCHEDULE 1 REVIEW COMMENTS	6	05/21/24	CM	BG	TD	RESUBMISSION PER REVIEW COMMENTS DATED 04/13/24
0	04/28/23	CM	BG	TD	SUBMITTAL REVIEW	5	01/03/24	CM	BG	TD	RESUBMISSION PER REVIEW COMMENTS DATED 12/27/23

DESIGNED BY BD
DRAWN BY CM
CHECKED BY TD
IN CHARGE –
DATE 04/28/23

LICENSED BUILDING TECHNOLOGISTS #758796 CLASS: CBO LIC. EXPIRES 03-28-27 ACTIVE

SAN FRANCISCO BAY AREA RAPID TRANSIT DISTRICT

SIEMENS

SIEMENS INDUSTRY, INC.
46897 BAYSIDE PARKWAY
FREMONT, CA 94538
510.293.2100
866.728.7767 (24-HR SERVICE)

STATE LIC: C-10 #758796

SUBMITTED _____ APPROVED _____

FIRE ALARM SYSTEM REPLACEMENT
PHASE 3
A30 - COLISEUM
FA-LAYOUT PLAN
PEDESTRIAN BRIDGE TO COLISEUM
DETAIL STAIRCASE PEDESTAL

CADD FILENAME	
F590-A30.dwg	
SIZE: D	SCALE: 1/8"=1'-0"
CONTRACT NO.: 15IJ-130	REV.: 7
AREA CODE: F590-A30	PAGE NO.: 076

PLOT DATE: 11/03/2025 15:53 BY: ZAHA1196 FILE: C:\Users\zaha1196\OneDrive - Siemens AG\ECT MCKOS Documents - BOA2 FIS BART FA Replacement Phase III_4404-349954\Engineering Documents\A30 - COLISEUM SHEETS\FS5F590-A30.dwg SIZE: 0.1368 PAPER SIZE: ANSI D 22x34"

RECORD SET

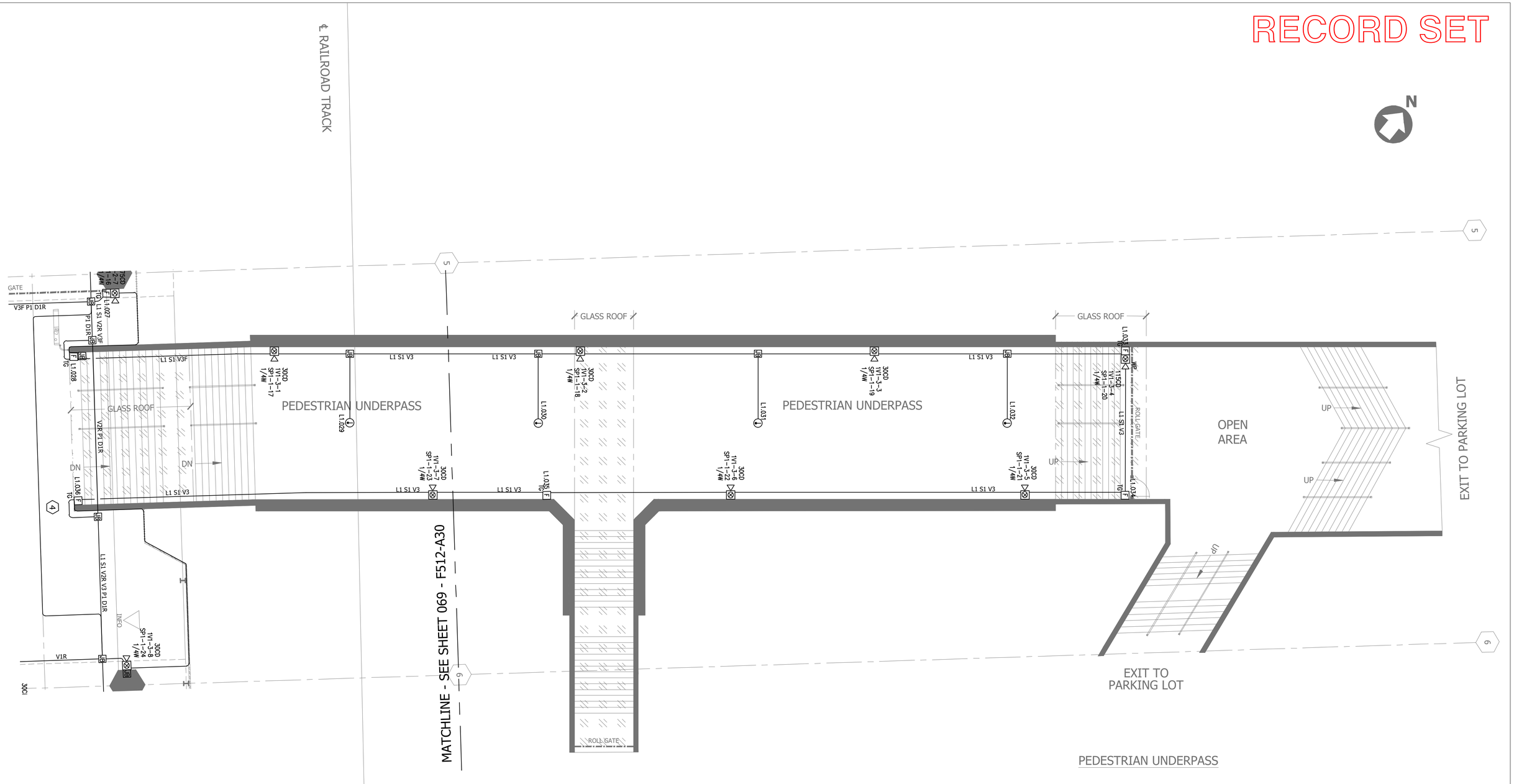

CONTRACT	
15NL-140	
CONTRACT SHEET NO.	PG. NO.
R021	102

REV	DATE	BY	SUB	APP	DESCRIPTION
4	12/06/23	CM	BG	TD	RESUBMISSION PER OAK AHJ COMMENTS DATED 10/24/23
3	07/20/23	AG	BG	TD	RESUBMISSION PER REVIEW COMMENTS DATED 07/17/23
2	06/26/23	CM	BG	TD	RESUBMISSION PER REVIEW COMMENTS DATED 06/14/23
1	06/02/23	CM	BG	TD	INCORPORATED CHANGES PER SCHEDULE 1 REVIEW COMMENTS
0	04/28/23	CM	BG	TD	SUBMITTAL REVIEW

REV	DATE	BY	SUB	APP	DESCRIPTION
9	11/03/25	SR	SR	JM	RECORD DRAWINGS (REV#2)
8	02/05/25	BG	BG	TD	RECORD DRAWINGS (REV#2)
7	07/17/24	AM	BG	TD	RECORD DRAWINGS
6	05/21/24	CM	BG	TD	RESUBMISSION PER REVIEW COMMENTS DATED 04/13/24
5	01/03/24	CM	BG	TD	RESUBMISSION PER REVIEW COMMENTS DATED 12/27/23

DESIGNED BY	BD
DRAWN BY	CM
CHECKED BY	TD
IN CHARGE	–
DATE	04/28/23

HIGH RISE BUILDING TECHNOLOGIES INC. #758796 CLASS: C10 EXPIRES: 02-28-27 ACTIVE

SAN FRANCISCO BAY AREA RAPID TRANSIT DISTRICT

SIEMENS

SIEMENS INDUSTRY, INC.
46897 BAYSIDE PARKWAY
FREMONT, CA 94538
510.293.2100
866.728.7767 (24-HR SERVICE)

STATE LIC: C-10 #758796

SUBMITTED _____ APPROVED _____

FIRE ALARM SYSTEM REPLACEMENT
PHASE 3
A30 - COLISEUM
FA-LAYOUT PLAN
PEDESTRIAN UNDERPASS

CADD FILENAME	
F591-A30.dwg	
SIZE: D	SCALE: 1/8"=1'-0"
CONTRACT NO.	REV.
15IJ-130	7
AREA CODE	PAGE NO.
F591-A30	077

PLOT DATE: 11/03/2025 15:33 BY: 204117B5 FILE: C:\Users\204117B5\OneDrive - Siemens AG\BCT MCOUS Documents - BOA2 ITS BART FA Replacement Phase III_4404-349954\Engineering Documents\A30 - COLISEUM SHEETSETS\F591-A30.dwg SIZE: 0.14MB PAPER SIZE: ANSI D 22x34"

120V POWER SUPPLY - SINGLE LINE DIAGRAM (SLD)

RECORD SET

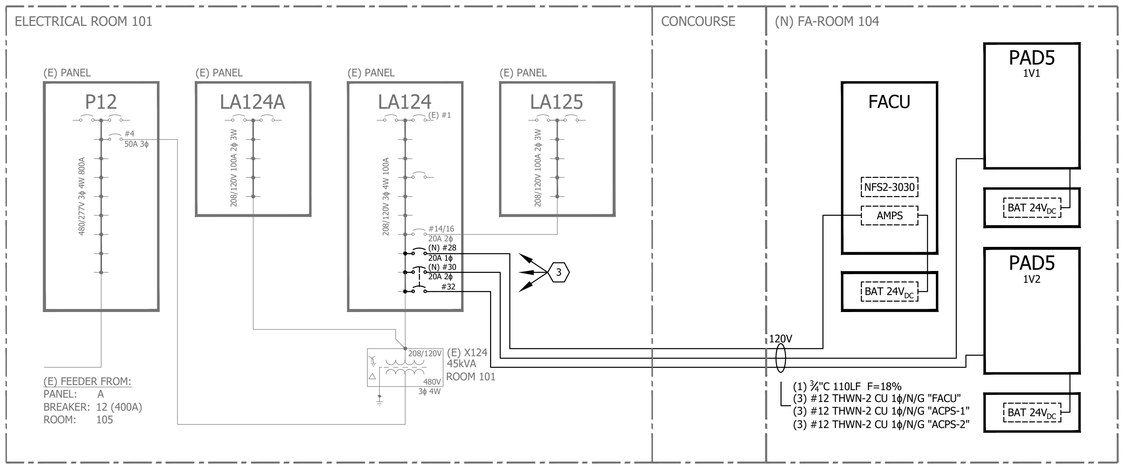

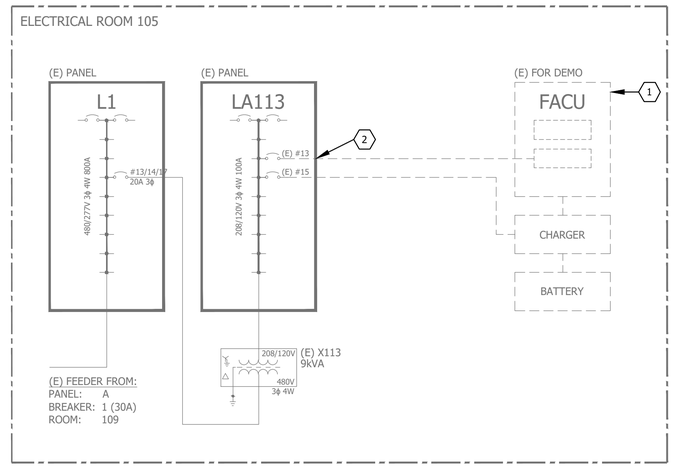

GENERAL NOTES:

A. FOR OVERALL STATION SINGLE LINE DIAGRAM REFER TO REFERENCE DRAWINGS.

B. CONDUIT SIZE MIN. ¾", UNLESS OTHERWISE NOTED

C. EACH FA POWER SUPPLY CONTAINS INBUILT BATTERY BACKUP

D. EACH CIRCUIT MUST BE LABELED WITH RED PLACARD "FIRE ALARM SYSTEM" (IN ACCORDANCE WITH NFPA 72, SECTION 10.6.5.2.2)

E. EACH FACU MUST BE LABELED WITH THE DEDICATED ELECTRICAL PANEL BOARD AND CIRCUIT BREAKER

F. PANEL SCHEDULE:
- PANEL SCHEDULE IS BASED ON AS BUILT DRAWINGS AND FIELD VISITS.
- ALL INFORMATION SHALL BE FIELD VERIFIED.
- VOLTAGES SHALL BE VERIFIED USING A VOLTMETER BEFORE WORKING ON ANY CIRCUIT.
- CONTRACTOR PROVIDE UPDATED AND SITE VERIFIED PANEL SCHEDULE.

G. PANEL SCHEDULE DEVIATIONS:
ANY CHANGE TO OR DISCREPANCY FOUND IN PANEL SCHEDULES SHALL BE REPORTED TO THE ENGINEER ASAP BY COMPLETING A YELLOW BOOK ENGINEERING CHANGE REQUEST FORM.

SHEET KEY NOTES:

1. REMOVE EXISTING FACU, SUB-COMPONENTS, WIRING, AND CONDUITS
2. REMOVE EXISTING POWER SUPPLY FROM ELECTRICAL PANEL, LABEL THE BECOMING AVAILABLE BREAKER SLOTS AS "SPARE"
3. POWER SUPPLY:
ADD NEW CIRCUIT BREAKERS IN ACCORDANCE WITH EXISTING PANEL MANUFACTURER SPECIFICATION IN SPARE SLOT FOR DEDICATED POWER SUPPLY:

LA124 - (N) BREAKER #28, 120V, 20A, 1ϕ, FA-PANEL "FACU"
- (N) BREAKER #30, 240V, 20A, 2ϕ, POWER SUPPLY "PAD5"*

*) INSTALL 2-POLE BREAKER FOR THE ENTIRE POWER SUPPLY "PAD5" TO ENSURE THAT THE ENTIRE FA-PANEL IS DE-ENERGIZED WITH ONE BREAKER.

EACH BREAKER FOR FA SYSTEMS MUST BE EQUIPPED WITH AN BREAKER LOCKING DEVICE IN ACCORDANCE WITH NFPA 72, SECTION 10.6.5.4

GENERAL ELECTRIC (INSERT 8½ x 11½)	PANEL LA124 (ROOM 101)													RATING: 208/120V, 3Φ, 4W 100A MLO
DESCRIPTION	WATTAGE ΦA	WATTAGE ΦB	WATTAGE ΦC	POLE	AMP	CKT	A B C	CKT	AMP	POLE	WATTAGE ΦA	WATTAGE ΦB	WATTAGE ΦC	DESCRIPTION
SPACE						1A		2A						SPACE
SPACE						1B		2B						SPACE
RECP. TV AT PLATFORM WEST OF P137 & ELEV. SHAFT			600	1	20	1		2	20	1			500	RECP. AT CONCESSION, AC
RECP. AT PLATFORM EAST OF P137	800			1	20	3		4	20	1	500			RECP. AT CONCESSION
WATER HEATER 1kW AT PLATFORM		1,000		1	20	5		6	20	1		500		RECP. AT CONCESSION
EXHAUST FAN EF-5			1,000	1	20	7		8	20	1			600	RECP. AT CONCESSION
TELEGUIDE UNITS CONCOURSE LEVEL	1,000			1	20	9		10	20	1	600			RECP. AT CONCESSION, BUS TRANSFER MACHINE
RAIN BIRD CONTROLLER		1,000		1	20	11		12	20	1		1,000		RECP. CONCOURSE, PUMP STA, PHONE, LIGHTS TUNNEL VID
WATER HEATER 1kW AT CUSTODIAN			1,000	1	20	13		14	??	2	1,000		1,200	SUB-PANEL LA125 (R.R. OUTLETS)
EXHAUST FAN EF-4, TOILETS	400			1	20	15		16						
UNKNOWN LOAD		1,000		1	20	17		18	20	1		1,000		RECP. ELECTRICAL ROOM
TELEGUIDE UNITS PLATFORM LEVEL				1	20	19		20	20	1			1,000	SPARE ELEV. SHAFT
LIGHTS OTIS ESCAL. #4 (S2)				1	20	21		22	20	1	1,000			EMERGENCY LIGHT CONSOLE
LIGHTS OTIS ESCAL. #3 (S1)				1	20	23		24	20	1				AIR BART TICKET MACHINE NORT EAST CONCOURSE ???
LIGHTS CONCOURSE STEPS & SUMP PUMP				1	20	25		26						SPACE
SPARE				3	20	27		28	20	1	600			(E) SPARE, (N) FA-AMPLIFIER PANEL "MAIN-FACU"
						29		30	20	2		1,200	1,200	(E) SPARE, (N) POWER SUPPLY "PAD5"
						31		32						
WATTAGE PHASE ΦA: 5,900 W ΦB: 6,700 W ΦC: 7,100 W TOTAL: 19,700 W = 55 A								FEEDER FROM: PANEL P12 BREAKER #4 (50A) VIA XFMR X124						

GENERAL ELECTRIC (INSERT 8½ x 11)	PANEL LA113 (ROOM 105)													RATING: 208/120V, 3Φ, 4W 100A MLO
DESCRIPTION	WATTAGE ΦA	WATTAGE ΦB	WATTAGE ΦC	POLE	AMP	CKT	A B C	CKT	AMP	POLE	WATTAGE ΦA	WATTAGE ΦB	WATTAGE ΦC	DESCRIPTION
SPACE				1		1A		2A						SPACE
RECP. T/C ROOM		1,000		1	20	1		2	20					RECP. TEL. BACKBOARD
RECP. T/C ROOM & MECH. ROOM, EXHAUST FAN EF-3			900	1	20	3		4	20					MECH. ROOM LIGHTS & TRANS ENCL. LIGHTS
MECH. CONTROL CIRCUIT	1,000			1	20	5		6	20					SWGR ROOM & TRANS ENCL. RECP., MACH FAN, ADT
SPARE				1	20	7		8	20					BATTERY CHARGER
SPACE				1		9		10	20					SPARE
SPARE				1	20	11		12	20					IRRIGATION CONTROLLER
(E) FIRE ALARM CONTROL PANEL (TO BE REMOVED)		1,000	1,000	2	20	13		14						SPACE
						15		16						SPACE
SPACE				1	20	17		18						SPACE
WATTAGE PHASE ΦA: 1,000 W ΦB: 2,000 W ΦC: 1,900 W TOTAL: 4,900 W = 14 A								FEEDER FROM: PANEL L1 BREAKER #13/14/17 VIA XFMR X113						

CONTRACT	
15NL-140	
CONTRACT SHEET NO.	PG. NO.
R022	103

REV	DATE	BY	SUB	APP	DESCRIPTION
4	12/06/23	CM	BG	TD	RESUBMISSION PER OAK AHJ COMMENTS DATED 10/24/23
3	07/20/23	AG	BG	TD	RESUBMISSION PER REVIEW COMMENTS DATED 07/17/23
2	06/26/23	CM	BG	TD	RESUBMISSION PER REVIEW COMMENTS DATED 06/14/23
1	06/02/23	CM	BG	TD	INCORPORATED CHANGES PER SCHEDULE 1 REVIEW COMMENTS
0	04/28/23	CM	BG	TD	SUBMITTAL REVIEW
9	11/03/25	SR	SR	JM	RECORD DRAWINGS (REV#2)
8	02/05/25	BG	BG	TD	RECORD DRAWINGS (REV#2)
7	07/17/24	AM	BG	TD	RECORD DRAWINGS
6	05/21/24	CM	BG	TD	RESUBMISSION PER REVIEW COMMENTS DATED 04/13/24
5	01/03/24	CM	BG	TD	RESUBMISSION PER REVIEW COMMENTS DATED 12/27/23

DESIGNED BY BD
DRAWN BY CM
CHECKED BY TD
IN CHARGE --
DATE 04/28/23

PROFESSIONAL BUILDING TECHNOLOGIES INC. #758796 CLASS: C10 EXPIRES: 02-28-27

SAN FRANCISCO BAY AREA RAPID TRANSIT DISTRICT

SIEMENS

SIEMENS INDUSTRY, INC.
46897 BAYSIDE PARKWAY
FREMONT, CA 94538
510.293.2100
866.728.7767 (24-HR SERVICE)
STATE LIC: C-10 #758796

SUBMITTED _____ APPROVED _____

FIRE ALARM SYSTEM REPLACEMENT
PHASE 3
A30 - COLISEUM
E-POWER SUPPLY 120V
SINGLE LINE DIAGRAM
FACU AND PAD5

CADD FILENAME	
E100-A30.dwg	
SIZE	SCALE
D	---
CONTRACT NO.	REV.
15IJ-130	7
AREA CODE	PAGE NO.
E100-A30	078

PLOT DATE: 11/03/2025 15:53 BY: 200417PB FILE: C:\Users\p004710p\OneDrive - Siemens AG\ECT NOC\05 Documents - BOA2 FIS BART FA Replacement Phase III_4A0P-349954\Engineering Documents\A30 - COLISEUM SHEETS\E100-A30.dwg SIZE: 8.12MB PAPER SIZE: ANSI D 22x34"

(E) FIRE ALARM DEMOLITION SCHEDULE

RECORD SET

TABLE (E) FIRE ALARM DEVICES DECOMMISSIONING SCHEDULE

#	DEVICE	SYSTEM/ZONE	LOCATION	NOTE/POWER SUPPLY	DEMO
1	FACU	FARADAY	ROOM 105, ELEC. ROOM	FED FROM E-PANEL LA113, BRK #13, CHARGER BRK #18	A30
2	PS	9	CONCOURSE	NEAR JANITOR DOOR	
3	SM	6-1	ROOM 101	CONCOURSE	
4	SM	6-2	ROOM 107	FABN ROOM	
5	SM	6-3	ROOM 108A	TRAIN CONTROL ROOM	
6	SM	6-4	ROOM 108A	TRAIN CONTROL BATTERY ROOM	
7	SM	6-5	ROOM 105	ELEC. ROOM	
8	SM	7	OAK	OAKLAND AIRPORT CONNECTOR	
9	SM	10	BREAKROOM	CONCOURSE	
10	WF	3	ROOM 107	FAN ROOM STANDPIPE	
11	WF	5	IN MANHOLE	CURB NEXT TO AIRBART BUS PARKING	
12	TP	8-1	IN MANHOLE	CURB NEXT TO AIRBART BUS PARKING	
13	TP	8-2	ROOM 107	FAN ROOM	

NOTE:

VALVE, WATER FLOW, AND TAMPER SWITCHES EMBEDDED WITHIN THE WATER SUPPLY PIPES ARE SUBJECT TO BE RE-USED AND TERMINATED TO THE NEW FIRE ALARM MONITOR MODULES.

LEGEND:

SM - SMOKE DETECTOR
HT - HEAT DETECTOR
TP - TAMPER SWITCH
WF - WATERFLOW SWITCH
PS - MANUAL PULL STATION

ANN - REMOTE ANNUNCIATOR
NAC- NOTIFICATION APPLIANCE (HORN/STROBE)
SAB- STATION AGENT BOOTH

GENERAL SHEET NOTES:

1. AFTER SUCCESSFUL INTEGRATION, TESTING, AND FINAL ACCEPTANCE OF THE NEW FIRE ALARM SYSTEM DECOMMISSIONING AND REMOVE THE EXITING (OLD) FIRE ALARM SYSTEM COMPLETELY.
2. REFER TO CONTRACT DOCUMENTS AND SHEET 001 - G000 FOR ADDITIONAL REQUIREMENTS REGARDING DECOMMISSIONING AND DEMOLITION.
3. DECOMMISSIONING AND REMOVAL OF EXISTING FA-SYSTEM INCLUDE:
   - FACU AND ALL RELATED PANELS,
   - POWER SUPPLY INCLUDING FEEDER CABLE AND CONDUITS AND BREAKER,
   - BATTERY CABINETS AND CHARGER,
   - TERMINATION AND RELAY CABINETS,
   - DETECTORS (SMOKE DETECTORS, DUCT SMOKE DETECTORS, HEAT DETECTORS,
   - MANUAL PULL STATIONS,
   - CONTROL DEVICES,
   - MONITOR DEVICES,
   - NOTIFICATION DEVICES,
   - ANNUNCIATOR PANELS,
   - ALL J-BOXES AND PULL BOXES
   - ALL EXPOSED AND ACCESSIBLE WIRE WAYS, CONDUITS, WIRE TROUGHS,
   - ALL WIRES IN REMAINING (EMBEDDED) CONDUITS,
4. REMAINING, INACCESSIBLE AND/OR EMBEDDED CONDUITS SHALL BE LABELED ACCORDING TO LABELING REQUIREMENTS, REFER TO SHEET 014 - G270 FOR DETAILS.
5. REFER TO BART FA DEPARTMENT FOR FURTHER INFORMATION REGARDING THE EXISTING FA SYSTEM.
6. DEVICE SCHEDULE IS BASED ON THE PREVENTIVE MAINTENANCE PROGRAM FOR THE EXISTING FA SYSTEM AND MAY VARIES FROM SITE CONDITIONS.
7. REFER TO AS-BUILT DOCUMENTATION PROVIDED BY BART FA DEPARTMENT AND/OR ON SITE DOCUMENTATION, LOCATED WITHIN THE FA MAIN PANELS, FOR MOST ACCURATE AS-BUILT REFERENCE.
8. EXISTING VALVE AND WATER FLOW SWITCHES EMBEDDED WITHIN THE WATER SUPPLY PIPES OF THE FIRE SPRINKLER SYSTEM ARE SUBJECT TO BE RE-USED AND TERMINATED TO THE NEW FIRE ALARM MONITOR MODULES DURING THE COMMISSIONING AND TESTING PHASE OF THE PROJECT.

CONTRACT	
15NL-140	
CONTRACT SHEET NO.	PG. NO.
R023	104

REV	DATE	BY	SUB	APP	DESCRIPTION
4	12/06/23	CM	BG	TD	RESUBMISSION PER OAK AHJ COMMENTS DATED 10/24/23
3	07/20/23	AG	BG	TD	RESUBMISSION PER REVIEW COMMENTS DATED 07/17/23
2	06/26/23	CM	BG	TD	RESUBMISSION PER REVIEW COMMENTS DATED 06/14/23
1	06/02/23	CM	BG	TD	INCORPORATED CHANGES PER SCHEDULE 1 REVIEW COMMENTS
0	04/28/23	CM	BG	TD	SUBMITTAL REVIEW

REV	DATE	BY	SUB	APP	DESCRIPTION
9	11/03/25	SR	SR	JM	RECORD DRAWINGS (REV#2)
8	02/05/25	BG	BG	TD	RECORD DRAWINGS (REV#2)
7	07/17/24	AM	BG	TD	RECORD DRAWINGS
6	05/21/24	CM	BG	TD	RESUBMISSION PER REVIEW COMMENTS DATED 04/13/24
5	01/03/24	CM	BG	TD	RESUBMISSION PER REVIEW COMMENTS DATED 12/27/23

DESIGNED BY BD
DRAWN BY CM
CHECKED BY TD
IN CHARGE --
DATE 04/28/23

STATE OF CALIFORNIA BOARD FOR PROFESSIONAL ENGINEERS, LAND SURVEYORS AND GEOLOGISTS #79796 CLASS: CM/W EXPIRES 02-28-27

SAN FRANCISCO BAY AREA RAPID TRANSIT DISTRICT

SIEMENS

SIEMENS INDUSTRY, INC.
46897 BAYSIDE PARKWAY
FREMONT, CA 94538
510.293.2100
866.728.7767 (24-HR SERVICE)

STATE LIC: C-10 #758796

SUBMITTED _____

APPROVED _____

FIRE ALARM SYSTEM REPLACEMENT
PHASE 3
A30 - COLISEUM
DEMOLITION
SCHEDULE

CADD FILENAME	
D100-A30.dwg	
SIZE	SCALE
D	---
CONTRACT NO.	REV.
15IJ-130	7
AREA CODE	PAGE NO.
D100-A30	079

PLOT DATE: 11/03/2025 15:33 BY: ZDOM1TPB FILE: C:\Users\z0dm1tpb\OneDrive - Siemens AG\BCT MOCKS Documents - BCA2 FIS BART FA Replacement Phase III_4409-34995\Engineering Documents\A30 - COLISEUM\SHEETS\D100-A30.dwg SIZE: B LWRB PAPER SIZE: ANSI D 22x34"