CITY OF RANCHO SANTA MARGARITA
CALIFORNIA

PUBLIC WORKS PLANS AND SPECIFICATIONS FOR

FY 26-27 TRAFFIC SIGNAL ENHANCEMENTS

PROJECT NO. 410-900-921.005

PREPARED BY

CITY OF RANCHO SANTA MARGARITA
22112 EL PASEO
RANCHO SANTA MARGARITA, CALIFORNIA 92688

OCTOBER 2024

CITY OF RANCHO SANTA MARGARITA

SPECIFICATIONS FOR
FY 26-27 TRAFFIC SIGNAL ENHANCEMENTS

Prepared Under the Supervision of:



Wilson Leung
R.C.E. Number 86300
Expiration Date 03/31/2027

10/1/26
Date

Reviewed By:

Joe Parco, P.E.
Director of Public Works/ City Engineer

10/1/26
Date

CITY OF RANCHO SANTA MARGARITA

TABLE OF CONTENTS
FOR
FY 26-27 TRAFFIC SIGNAL ENHANCEMENTS

NOTICE INVITING SEALED BIDS NB-1

INSTRUCTIONS TO BIDDERS IB-1

PROPOSAL DOCUMENTS
Proposal P-1
Bidders Information P-3
List of Subcontractors P-4
References P-5
Contractor's Licensing Statement- P-6
Bid Bond P-7
Non-Collusion Affidavit P-9
Bidder's Certification of Acknowledgement of Compliance With Insurance P-10
Proposal Bid Sheets P-11

CONTRACT DOCUMENTS
Contract Agreement CA-1
Faithful Performance Bond CA-4
Material and Labor Bond CA-6
Compensation Insurance Certificate CA-8

GENERAL SPECIFICATIONS
Scope of Work GS-1
Location of Work GS-1
Time of Completion GS-1
Traffic Requirements GS-2
Utility Requirements GS-2
Flow and Acceptance of Water GS-3
Removal of Water GS-3
Standard Specifications GS-3
Resolution of Construction Claims GS-6

SPECIAL PROVISIONS
PART 1 - GENERAL PROVISIONS SP-1
PART 3 - CONSTRUCTION METHODS SP-26
PART 6 – TEMPORARY TRAFFIC CONTROL SP-31

APPENDICES
Water Pollution Control Plan Template ..... Appendix A
Applicable Standard Plans ..... Appendix B
Project Plans ..... Appendix C
Encroachment Permit Application ..... Appendix D

CITY OF RANCHO SANTA MARGARITA
NOTICE INVITING BIDS FOR CONSTRUCTION OF

FY 26-27 TRAFFIC SIGNAL ENHANCEMENTS

NOTICE IS HEREBY GIVEN that sealed bids for the **FY 26-27 TRAFFIC SIGNAL ENHANCEMENTS** ("Project") in the City of Rancho Santa Margarita will be received at the Office of the City Engineer of the City of Rancho Santa Margarita, 22112 El Paseo, Rancho Santa Margarita, California 92688, until **10:00 a.m. on Tuesday, November 10, 2026**, at which time they will be publicly opened and read aloud.

DESCRIPTION OF THE WORK: In general, the work is comprised of public works construction including mobilization, traffic control, best management practices, pole and cabinet surface preparation and painting, installation of decorative features, and other miscellaneous improvements as shown on the plans and as required to complete the work.

AWARD OF CONTRACT: The City reserves the right after opening bids to reject any or all bids, to waive any informality (non-responsiveness) in a bid, or to make award to the lowest responsive, responsible bidder, and reject all other bids, as it may best serve the interest of the City. Within three (3) business days of bid opening, contractor must submit a revised bid bond with numerical dollar values, both in words and with digits of bid amount. Within five (5) working days after the date of the Notice of Apparent Low Bidder, the successful bidder will be required to submit required Contract Agreement and Insurance. Within ten (10) working days after the date of the Notice of Award, the successful bidder will be required to submit Bonds (Faithful Performance and Material and Labor), Construction Schedule, Traffic Control Plan and Water Pollution Control Plan.

CONTRACTOR'S LICENSE CLASSIFICATION: The Contractor shall possess a valid **Class C-61/D64 Lightpole Restoration Contractor's License** at the time of submitting bids, in accordance with provisions of Chapter 9, Division III of the California Business and Professions Code.

WAGE RATE REQUIREMENTS: The wage rates applicable to this Project are the State of California Department of Industrial Relations prevailing rates of per diem wages. In accordance with the provisions of Sections 1773.2 of the California Labor Code, copies of the general prevailing rate of per diem wages as determined by the State Director of Industrial Relations are available at City Hall, which shall be made available to any interested party upon request, or on the Internet at the State Department of Industrial Relations website (www.dir.ca.gov) under Statistics and Research. It shall be mandatory upon the Contractor to whom the contract is awarded and upon any subcontractor to pay not less than said specified rates to all workers employed by them in the execution of the contract. A copy of said rates shall be posted at each job site during the course of construction. The Contractor and all subcontractors shall comply with all provisions of the California Labor Code relating to prevailing wage rates, including Sections 1770–1781.

This Project is subject to compliance monitoring and enforcement by the Department of Industrial Relations. The Department of Industrial Relations shall monitor and enforce compliance with applicable prevailing wage requirements for the contract. The reporting requirements may be found at https://www.dir.ca.gov/Public-Works/Contractors.html. The Contractor is responsible for complying with all requirements of the Department of Industrial Relations, including filing electronic payroll reports.

A contractor or subcontractor will not be qualified to bid on, be listed in a bid proposal, subject to the requirements of Section 4104 of the Public Contract Code, or engage in the performance of any contract for public work on a public works project unless registered with the Department of Industrial Relations pursuant to Labor Code Section 1725.5. It is not a violation of Labor Code Section 1771.1 for an unregistered contractor to submit a bid that is authorized by Section 7029.1 of the Business and Professions Code or by Section 10164 or 20103.5 of the Public Contract Code, provided the contractor is registered to perform public work pursuant to Section 1725.5 at the time the contract is awarded.

RETAINAGE FROM PAYMENTS: The Contractor may elect to receive 100 percent of payments due under the Contract Documents from time to time, without retention of any portion of the payments by the City, by depositing securities of equivalent value with the City in accordance with the provisions of Section 22300 of the Public

Contract Code. If the Contractor chooses not to exercise its rights under Public Contract Code Section 22300, the full five percent (5%) retention will be deducted from all payments. The final retention will be authorized for payment thirty-five (35) days after the date of recordation of the Notice of Completion, if no stop notices have been filed. The City may withhold from release of the final retention amounts authorized under Public Contracts Code Section 7107 and/or 125% of amounts identified in any Stop Notices received by the City.

OBTAINING OR INSPECTING CONTRACT DOCUMENTS: Contract Documents may be inspected without charge at the Public Works Department, City Hall, 22112 El Paseo, Rancho Santa Margarita, CA 92688. Contract Documents are available in portable document form (PDF) on the City's website: http://www.cityofrsm.org/171/Bids-Request-For-Proposals. It is the contractor's responsibility to ensure they are on the City's Plan Holder's List and they obtain any addendums or clarifications that are issued by the City on the City's website prior to submitting a bid. For any questions regarding acquisition of Contract Documents, contact Wilson Leung at wleung@cityofrsm.org.

Dated this 16th day of October 2026.

The City Engineer's estimate is $209,000.

Published: Coto De Caza News
October 16, 2026
October 23, 2026

City of Rancho Santa Margarita, California

BY _____
Amy Diaz, City Clerk
22112 El Paseo
Rancho Santa Margarita, CA 92688

CITY OF RANCHO SANTA MARGARITA

INSTRUCTIONS TO BIDDERS
FOR
FY 26-27 TRAFFIC SIGNAL ENHANCEMENTS

1. PROPOSAL FORMS

Bids shall be submitted in writing on the Proposal forms provided by the City of Rancho Santa Margarita (hereinafter "CITY" or "City"). All blank spaces in the bid forms must be correctly filled in and all information requested therein must be clearly and legibly set forth in the manner and form indicated. All spaces for bid prices and lump sum price for which the bid is made, must be filled in, in both words and figures. All prices and notations must be in ink or typewritten. No erasures will be permitted. Mistakes may be crossed out and corrections typed or written in ink adjacent thereto and must be initialed by the person or persons signing the bid. Bidder acknowledges and agrees that by failing to complete the bid forms in their entirety, as set forth above, the CITY may find the bidder's entire bid non-responsive and may cause the rejection of the bidder's proposal at the discretion of the CITY.

2. PROPOSAL GUARANTEE (BID BOND)

In accordance with Public Contract Code Section 20170, proposals must be accompanied by a proposal guarantee consisting of either cash, a cashier's check, a certified check or bid bond payable to the CITY in the minimum amount of ten percent (10%) of the total amount bid. Any proposal not accompanied by such a guarantee will not be considered. **IF A BIDDER TO WHOM A CONTRACT IS AWARDED FAILS OR REFUSES TO EXECUTE THE CONTRACT DOCUMENTS OR FURNISH THE REQUIRED INSURANCE POLICIES AND BONDS AS SET FORTH IN THOSE DOCUMENTS, THE PROPOSAL GUARANTEE SHALL BE FORFEITED TO THE CITY**. The proposal guarantees of all bidders will be held until the successful bidder has properly executed all Contract Documents.

3. NON-COLLUSION AFFIDAVIT

Bidder shall declare that the only persons or parties interested in the proposal as principals are those named therein; that no officer, agent, or employee of the CITY is personally interested, directly or indirectly, in the proposal; that the proposal is made without connection to any other individual, firm, or corporation making a bid for the same work; and that the proposal is in all respects fair and without collusion or fraud. The Non-Collusion Affidavit shall be executed and submitted with the proposal.

4. PROPOSAL BID SHEET

Bidders shall give unit prices for each and all of the items set forth. No aggregate bids will be considered. The bidder shall set forth for each item of work, in clearly legible figures, a unit item price and a total for the item in the respective spaces provided for this purpose. The quantities listed in the Bid sheets are supplied to give an indication of the general scope of work, but the accuracy of figures is not guaranteed and the bidder shall make his own estimates from the drawings. In case of a variation between the unit price and the totals shown by the bidder, the unit price will be considered to be the bid.

5. DELIVERY OF PROPOSAL

Proposals may be mailed or delivered by messenger. However, it is the bidder's responsibility alone to ensure delivery of the proposal to the hands of the CITY's designated official prior to the bid opening time deadline set forth in the "Notice Inviting Sealed Bids." Late proposals will not be considered and will be returned to the bidder unopened. Proposals shall be enclosed in a sealed envelope plainly marked on the outside, "FY 26-27 TRAFFIC SIGNAL ENHANCEMENTS PROJECT- DO NOT OPEN WITH REGULAR MAIL."

6. WITHDRAWAL OF PROPOSALS

A proposal may be withdrawn by a written request signed by the bidder. Such requests must be delivered to the CITY's designated official prior to the bid-opening time deadline set forth in the "Notice Inviting Sealed Bids". The withdrawal of a proposal will not prejudice the right of the bidder to submit a new proposal, provided there is time remaining to do so. Proposals may not be withdrawn after the bid opening without forfeiture of the proposal guarantee.

7. NONRESPONSIVE PROPOSALS

Unauthorized conditions, limitations, or provisions attached to a proposal will render it nonresponsive and may cause its rejection. The completed proposal forms shall be without inter-lineation, alterations, or erasures. Alternative proposals will not be considered unless specifically requested. No oral, telegraphic, or telephonic proposal, modification, or withdrawal will be considered.

8. TAXES

No mention shall be made in the proposal of Sales Tax, Use Tax, or any other tax, as all amounts bid will be deemed and held to include any such taxes that may be applicable. Bidder acknowledges and agrees that CITY shall not be responsible for the payment of any increase in Sales Tax, Use Tax, or any other tax that takes effect after award.

9. DISQUALIFICATION OF BIDDERS

In the event that any bidder acting as a prime contractor has an interest in more than one proposal, all such proposals will be rejected, and the bidder will be disqualified. This restriction does not apply to subcontractors or suppliers who may submit quotations to more than one bidder.

No contract will be executed unless the bidder is licensed in accordance with the provisions of the Business and Professions Code.

10. INTERPRETATION OF PLANS AND DOCUMENTS

If any person contemplates submission of a bid for the proposed contract and is in doubt as to the true meaning of any part of the plans, specifications or other proposed contract documents, or finds discrepancies in, or omissions from, the drawings or specifications, he or she may submit to the City Engineer a written request for an interpretation or correction thereof five (5) working days prior to the scheduled bid opening. The person submitting the request will be responsible for its prompt delivery. Any interpretation or correction of the proposed documents shall be made only by addendum duly issued and copy of such addendum will be

mailed or delivered to each person receiving a set of such documents. The City Engineer will not be responsible for any other explanation or interpretations of the proposed documents.

11. ADDENDA OR BULLETINS

The effect of all addenda to the Contract Documents shall be considered in the bid, and said addenda shall be made a part of the Contract Documents and shall be returned with them. Before submitting a bid, each bidder shall confirm as to whether or not any addenda have been issued, and failure to cover in this bid any such addenda issued, may render bid non-responsive and may result in its rejection by the CITY.

12. LEGAL RESPONSIBILITIES

All proposals must be submitted, filed, made, and executed in accordance with State and Federal laws relating to bids for contracts of this nature whether the same are expressly referred to herein or not.

Any bidder submitting a proposal shall by such action thereby agree to each and all of the terms, conditions, provisions, and requirements set forth, contemplated, and referred to in the Plans, Specifications, and Contract Documents, and to full compliance therewith.

13. AWARD OF CONTRACT

Following a review of the bids, the CITY shall determine whether to award the contract or to reject all bids. The award of contract, if made, will be to the lowest responsive-responsible bidder as determined solely by the CITY. At the time of contract award, the successful bidder shall hold a **Class C-61/D64 Lightpole Restoration Contractor's License** as required to perform the work, issued by the State of California. Additionally, the CITY reserves the right to reject any or all proposals, to accept any bid or portion thereof, to waive any irregularity, and to take the bids under advisement for the period of time stated in the "Notice Inviting Sealed Bids", all as may be required to provide for the best interests of the CITY. In no event will an award be made until all necessary investigations are made as to the responsibility and qualifications of the bidder to whom the award is contemplated.

No bidder may withdraw its proposal for a period of forty-five (45) days after the time set for opening thereof. However, the CITY will return all proposal guarantees within ten (10) days after the award of the contract or rejection of the bids, as the case may be, to the respective bidders whose proposals they accompany.

14. PREVAILING WAGE RATES

The wage rates applicable to this Project are the State of California Department of Industrial Relations prevailing rates of per diem wages. In accordance with the provisions of Sections 1773.2 of the California Labor Code, copies of the general prevailing rate of per diem wages as determined by the State Director of Industrial Relations are available at City Hall, which shall be made available to any interested party upon request, or on the Internet at the State Department of Industrial Relations website (www.dir.ca.gov) under Statistics and Research.

It shall be mandatory upon the Contractor to whom the Contract is awarded and upon any subcontractor to pay not less than said specified rates to all workers employed by them in the execution of the Contract. A copy of said rates shall be posted at each job site during the course of construction. The Contractor and all subcontractors shall comply with all provisions of the California Labor Code relating to prevailing wage rates, including Sections 1770–1781.

This Project is subject to compliance monitoring and enforcement by the Department of Industrial Relations. The Department of Industrial Relations shall monitor and enforce compliance with applicable prevailing wage requirements for this Agreement. The reporting requirements may be found at https://www.dir.ca.gov/Public-Works/Contractors.html. The Contractor is responsible for complying with all requirements of the Department of Industrial Relations, including filing electronic payroll reports.

A contractor or subcontractor will not be qualified to bid on, be listed in a bid proposal, subject to the requirements of Section 4104 of the Public Contract Code, or engage in the performance of any contract for public work on a public works project unless registered with the Department of Industrial Relations pursuant to Labor Code Section 1725.5. It is not a violation of Labor Code Section 1771.1 for an unregistered contractor to submit a bid that is authorized by Section 7029.1 of the Business and Professions Code or by Section 10164 or 20103.5 of the Public Contract Code, provided the contractor is registered to perform public work pursuant to Section 1725.5 at the time the contract is awarded. Contractor and its subcontractors shall maintain active registration with the Department of Industrial Relations for the duration of the Project.

A contractor or subcontractor will not be qualified to bid on, be listed in a bid proposal, subject to Section 6109 of the public Contract Code, or engage in the performance of any contract for public work on a public works project if the contractor or subcontractor is ineligible to perform work pursuant to Section 1777.1 or 1777.7 of the Labor Code.

The CITY will not recognize any claim for additional compensation because of the payment by the Contractor of any wage rate in excess of the prevailing wage rate or the Federal Minimum Wage Rate (whichever is greater) as set forth in the contract. The possibility of wage increases is one of the elements to be considered by the bidder in determining his bid, and will not under any circumstances be considered as the basis of a claim against the CITY on the Contract.

The Contractor and subcontractors shall comply with Section 1777.6 of the Labor Code which stipulates that it shall be unlawful to refuse to accept otherwise qualified employees as registered apprentices on any public works on any basis listed in Government Code Section 12940(a), as those bases are defined in Government Code Sections 12926 and 12926.1, except as provided in Labor Code Section 3077 and Government Code Section 12940.

15. WORKERS' COMPENSATION CERTIFICATE

Section 3700 of the Labor Code requires that every employer shall secure the payment compensation by either being insured against liability to pay compensation with one or more insurers or by securing a certificate of consent to self-insure from the State Director of Industrial Relations.

In accordance with this section and with Section 1861 of the Labor Code, the Contractor shall sign a Compensation Insurance Certificate which is included with the Contract Agreement,

and submit same to CITY along with the other required Contract Documents, prior to performing any work. Reimbursement for this requirement shall be considered as included in the various items of work.

16. CLAYTON ACT AND CARTWRIGHT ACT

In accordance with Section 7103.5 of the Public Contract Code, in entering into a public works contract or a subcontract to supply goods, services or materials pursuant to a public works contract, the Contractor or subcontractor offers and agrees to assign to CITY all rights, and interest in and all causes of action it may have under Section 4 of the Clayton Act (15 U.S.C. Sec. 15) or under the Cartwright Act (Chapter 2 (commencing with Section 16700) of Part 2 of Division 7 of the Business and Professions Code), arising from purchases of goods, services, or materials pursuant to the public works contract or the subcontract. This assignment shall be made and become effective at the time the awarding body tenders final payment to the Contractor, without further acknowledgment by the parties.

17. SUBLETTING AND SUBCONTRACTING.

Pursuant to the Subletting and Subcontracting Fair Practices Act (commencing with Section 4100 of the Public Contract Code), bidders are required to list in their proposal the name business address, California contractor license number, and public works contractor registration number issued pursuant to Section 1725.5 of the Labor Code of each subcontractor who will perform work or labor or render services in or about the construction of the work or improvement or a subcontractor who specially fabricates and installs a portion of the work or improvement according to detailed drawings contained in the Plans and Specifications in excess of 1/2 of 1% of this prime Contractor's total bid or $10,000, whichever is greater. If a subcontractor's California contractor license number or public works contractor registration number are submitted incorrectly in the bid, it will not be grounds for filing a bid protest or grounds for considering the bid nonresponsive if the corrected subcontractor's California contractor license number is submitted to CITY within 24 hours after the bid opening

If the bidder fails to list a subcontractor for a portion of work or if the bidder lists more than one subcontractor of the same portion of work in excess of 1/2 of 1% of the total bid or $10,000, whichever is greater, the bidder agrees that it is fully qualified to perform that portion of work itself, and that the bidder shall perform that portion of work itself. If after award of the contract, the bidder actually subcontracts that portion of work, except as provided in Public Contract Code Section 4107 or 4109, the bidder shall be subject to the penalties listed in Section 4111 of the Public Contract Code. It is the CITY's intent for the Subletting and Subcontracting Fair Practices Act to apply to all phases of the work.

18. SUBSTITUTION OF SECURITIES

In conformance with Public Contract Code Section 22300, which is incorporated herein by this reference, the Contractor may substitute securities for any monies withheld by the CITY to ensure performance under the Contract or, in the alternative, may request payment of retention earned directly to an escrow agent.

At the request and expense of the Contractor, the Contractor has the option to deposit securities, which have been approved by the CITY, with a State or Federally chartered bank as the escrow agent or require the City to deposit 5% of each progress payment with the escrow agent. Said securities will be used as a substitute for retention earnings required to

be withheld by the CITY, pursuant to the construction contract. Said securities shall have no obligation to any other construction contract for substitution of securities in lieu of retention. When the Contractor deposits the CITY approved securities with the escrow agent, the escrow agent shall notify the CITY within 10 calendar days of the deposit. Said securities shall be evaluated quarterly by the escrow agent to verify the current market value. If the current market value of said securities falls below the required amount, the escrow agent shall notify the Contractor and require additional securities and/or cash to be submitted for CITY approval, and be held in the escrow account to meet the Contractor's obligations. The escrow agent shall hold said securities until such time as the escrow agent receives written notification from the CITY that the Contractor has satisfactorily completed his Contract obligations.

The type of securities deposited and the method of release shall be approved by the City Attorney's office.

If the Contractor chooses not to exercise its rights under Public Contract Code Section 22300, the full five percent (5%) retention will be deducted from all payments. The final retention will be authorized for payment thirty-five (35) days after the date of recordation of the Notice of Completion, if no stop notices have been filed. The CITY may withhold from release of the final retention amounts authorized under Public Contracts Code Section 7107 and/or 125% of amounts identified in any Stop Notices received by the CITY.

BIDDER'S NAME_____

CITY OF RANCHO SANTA MARGARITA

PROPOSAL
FOR
FY 26-27 TRAFFIC SIGNAL ENHANCEMENTS

TO **CITY OF RANCHO SANTA MARGARITA**, as CITY:

In accordance with CITY's "Notice Inviting Sealed Bids", the undersigned BIDDER hereby proposes to furnish all materials, equipment, tools, labor, and incidentals required for the above stated project as set forth in the Plans, Specifications, and Contract Documents therefore, and to perform all work in the manner and time prescribed therein.

BIDDER declares that this proposal is based upon careful examination of the work site, Plans, Standard Specifications, Notice Inviting Sealed Bids, Instructions to Bidders, Proposal Documents, General Specifications, Special Provisions and Contract Documents. If this proposal is accepted for award, BIDDER agrees to enter into a contract with CITY at the unit and/or lump sum prices set forth in the following Proposal Bid Sheet. BIDDER understands that failure to enter into a contract in the manner and time prescribed will result in forfeiture to CITY of the Bid Security accompanying this proposal.

BIDDER understands that a bid is required for the entire work, that the estimated quantities set forth in the Proposal Bid Sheet are solely for the purpose of comparing bids, and that final compensation under the contract will be based upon the actual quantities of work satisfactorily completed. It is agreed that the unit and/or lump sum prices bid include all appurtenant expenses, taxes, royalties, and fees. In the case of discrepancies in the amounts bid, unit prices shall govern over extended amounts.

BIDDER agrees and acknowledges that it is aware of the provisions of Section 3700 of the Labor Code, which requires every employer to be insured against liability for workers' compensation or to undertake self-insurance in accordance with the provisions of that code, and that the BIDDER will comply with such provisions of that code before the commencement of any work under this Contract, if awarded.

BIDDER certifies that in all previous contracts or subcontracts, all reports which may have been due under the requirements of any CITY, State, or Federal equal employment opportunity orders have been satisfactorily filed, and that no such reports are currently outstanding.

BIDDER declares that the only persons or parties interested in this proposal as principals are those named herein; that no officer, agent, or employee of the CITY is personally interested, directly or indirectly, in this proposal; that this proposal is made without connection to any other individual, firm, or corporation making a bid for the same work; and that this proposal is in all respects fair and without collusion or fraud.

BIDDER certifies that affirmative action has been taken to seek out and consider disadvantaged business enterprises for those portions of the work to be subcontracted, and that such affirmative actions have been carefully documented, that said documentation is open to inspection, and that said affirmative action will remain in effect for the life of any contract awarded hereunder.

Furthermore, BIDDER certifies that affirmative action will be taken to meet all equal employment opportunity requirements of the contract documents.

BIDDER'S NAME:_____ DATE _____, 20____.

BIDDER'S ADDRESS:_____ BY _____
(Print Name)

_____

_____ _____
(Signature)

PHONE: (___) _____ TITLE _____

Subscribed and sworn to before me BY _____
this _____ day of _____, 20_____ (Print Name)

_____ _____
(Signature of Notary Public) (Signature)

(Attach Jurat) TITLE _____

(SEAL)

BIDDER'S INFORMATION

BIDDER certifies that the following information is true and correct:

Bidder's Name _____

Business Address _____

Email: _____ Telephone: (____) _____

State Contractor's License No. and Class _____

Original Date Issued _____ Expiration Date _____

The following are the names, titles, addresses, and phone numbers of all individuals, firm members, partners, joint ventures, and/or corporate officers having a principal interest in this proposal:

_____

_____

The dates of any voluntary or involuntary bankruptcy judgments against any principal having an interest in this proposal are as follows:

_____

_____

All current and prior DBA's, alias, and/or fictitious business names for any principal having an interest in this proposal are as follows:

_____

_____

Subscribed and sworn to before me
this _____ day of _____, 20___.

By _____
(Print Name)

_____
(Signature of Notary Public)

_____
(Signature)

Title _____

(SEAL)

Date _____, 20___

BIDDER'S NAME_____

LIST OF SUBCONTRACTORS (4100 PUBLIC CONTRACT CODE)

BIDDER proposes to subcontract certain portions of the work, and to procure materials and equipment from suppliers and vendors in excess of ½ of 1% of the total bid amount or ten thousand dollars ($10,000), whichever is greater as follows (add additional pages as necessary) (Bidder must include all requested information):

Subcontractor Name_____
Address_____
License No. and Class_____
DIR Registration No._____
Phone No._____ Email:_____
Percent of Total Contract_____
Specific Scope of Work_____
_____

Subcontractor Name_____
Address_____
License No. and Class_____
DIR Registration No._____
Phone No._____ Email:_____
Percent of Total Contract_____
Specific Scope of Work_____
_____

Subcontractor Name_____
Address_____
License No. and Class_____
DIR Registration No._____
Phone No._____ Email:_____
Percent of Total Contract_____
Specific Scope of Work_____
_____

Subcontractor Name_____
Address_____
License No. and Class_____
DIR Registration No._____
Phone No._____ Email:_____
Percent of Total Contract_____
Specific Scope of Work_____
_____

BIDDER'S NAME_____

REFERENCES

The following are the names, addresses, and phone numbers for three (3) public agencies for which BIDDER has performed similar work within the past two years:

Agency Name_____
Address_____
Phone No._____ Contact:_____
Description of Work_____

Agency Name_____
Address_____
Phone No._____ Contact:_____
Description of Work_____

Agency Name_____
Address_____
Phone No._____ Contact:_____
Description of Work_____

DESIGNATION OF SURETIES

The following are the names, addresses, and phone numbers for all brokers and sureties from whom BIDDER intends to procure insurance and bonds:

Name_____
Address_____
Phone No._____

Name_____
Address_____
Phone No._____

Name_____
Address_____
Phone No._____

Name_____
Address_____
Phone No._____

CONTRACTOR'S LICENSING STATEMENT

BIDDER certifies that the following is true and correct. The undersigned is licensed in accordance with the laws of the State of California providing for the registration of Contractors.

Contractor's License Number _____

DIR Registration No. _____

Name of Individual Contractor (Print or type):

_____

Signature of Owner(s)_____ _____

Business Address _____

or

Name of Company _____

Business Address _____

Officers:

Name _____ Title _____

Name _____ Title _____

Name _____ Title _____

or

Name of Corporation _____

Business Address _____

Corporation organized under the laws of the State of _____

_____ _____

Name of President of Corp./ Company Name of Secretary of Corp./ Company

Subscribed and sworn to before me this _____ day of _____, 20____

By:_____
(Signature)

_____
(Signature of Notary Public)

By:_____
(Print Name and Title)

(SEAL) (SEAL)

Bond Amount $_____
Bond Number _____

BID BOND (Page 1 of 2)

BIDDER'S BOND

KNOW ALL PERSONS BY THESE PRESENTS:

THAT WHEREAS, _____ (the "Principal") has submitted a bid
(NAME OF BIDDER)

(the "Bid") to the City of Rancho Santa Margarita, California (the "City") for construction of the _____ (the "Work"), as specifically
(NAME OF PROJECT AND/OR DESCRIPTION OF WORK)

set forth in documents entitled _____,
(TITLE OF BID PACKAGE)

Dated:_____, 20___ (the "Specifications").

AND WHEREAS, the Principal is required to provide bidder's security in an amount equal to at least ten percent (10%) of the amount of the Bid and has chosen to satisfy this obligation by providing this bond.

NOW, THEREFORE, we, the Principal, and _____ (the
(NAME OF SURETY)

"Surety"), an admitted surety insurer in the State of California, are held firmly bound unto the City of Rancho Santa Margarita in the sum of _____ and ___/100 DOLLARS ($_____), lawful money of the United States of America, for the payment of which sum, well and truly be made, we bind ourselves, our heirs, executors, administrators, successors, and assigns, jointly and severally, firmly by these presents, this amount being ten percent (10%) of the total amount of the Bid.

THE CONDITIONS OF THIS OBLIGATION ARE SUCH THAT:

1. If (a) the City accepts the Bid and awards the Principal a contract for the Work, and (b) within the time and manner required under the Specifications or by law, after the prescribed forms are presented to the Principal for signature, the Principal executes a written contract for construction of the Work in accordance with the Bid and delivers the required faithful performance and payment bonds and insurance policies, then this obligation shall become null and void; otherwise it shall be and remain in full force and effect.

2. The Surety, for value received, hereby stipulates and agrees that the obligation of said Surety and its bond shall be in no way impaired or affected by any extension of the

time within which the City may accept such Bid; and said Surety does hereby waive notice of any such extension.

3. In the event suit is brought upon this bond by the City and judgment is recovered, as part of the obligation secured hereby and in addition to the face amount specified in this bond, the Surety shall pay all costs incurred by the City in such suit, including reasonable attorneys' fees to be fixed by the court.

IN WITNESS WHEREOF, this instrument has been duly executed by the Principal and Surety above named on the ____ day of _____, 20__.

PRINCIPAL	SURETY
_____	_____
(Principal Name) (Seal)	(Surety Name) (Seal)
By: _____	By: _____
(Signature)	(Signature)
_____	_____
(Print Name and Title)	(Print Name and Title)
By: _____	By: _____
(Signature)	(Signature)
_____	_____
(Print Name and Title)	(Print Name and Title)
Principal Address and Telephone:	Surety Address and Telephone

Affix Corporate Seals
Attach Notary Acknowledgments for All Signatures
Attach Power-of-Attorney if Executed by Attorney-in-Fact

BIDDER'S NAME_____

NON-COLLUSION AFFIDAVIT TO BE EXECUTED
BY BIDDER AND SUBMITTED WITH BID

STATE OF CALIFORNIA)
) SS
COUNTY OF)

In conformance with Public Contract Code Section 7106, the party making the foregoing bid declares that the bid is not made in the interest of, or on behalf of, any undisclosed person, partnership, company, association, organization, or corporation; that such bid is genuine and not collusive or sham; that said bidder has not directly or indirectly induced or solicited any other bidder to put in a false or sham bid, and has not directly or indirectly colluded, conspired, connived, or agreed with any bidder or anyone else to put in a sham bid, or that anyone shall refrain from bidding; that the bidder has not in any manner, directly or indirectly, sought by agreement, communication, or conference with anyone to fix the bid price of the bidder or any other bidder, or to fix any overhead, profit, or cost element of the bid price, or of that of any other bidder, or to secure any advantage against the public body awarding the contract of anyone interested in the proposed contract; that all statements contained in the bid are true; and further, that the bidder has not, directly or indirectly, submitted his or her bid price or any breakdown thereof, or the contents thereof, or divulged information or data relative thereto, or paid, and will not pay, any fee to any corporation, partnership, company association, organization, bid depository, or to any member or agent thereof to effectuate a collusive or sham bid.

Any person executing this declaration on behalf of a bidder that is a corporation, partnership, joint venture, limited liability company, limited liability partnership, or any other entity, hereby represents that he or she has full power to execute, and does execute, this declaration on behalf of the bidder.

I declare under penalty of perjury under the laws of the State of California that the foregoing is true and correct and that this declaration is executed on _____ [date], at _____ [city], _____ [state].”

Signed_____

_____
Title

Subscribed and sworn to before me
this _____ day of _____,20____.

_____
Signature of Notary Public

(SEAL)

BIDDERS NAME _____

BIDDER'S CERTIFICATION FOR

ACKNOWLEDGEMENT OF COMPLIANCE WITH INSURANCE REQUIREMENTS FOR PUBLIC WORKS CONSTRUCTION CITY OF RANCHO SANTA MARGARITA

BIDDER agrees, acknowledges and is fully aware of the insurance requirements as specified in the INSTRUCTIONS TO BIDDERS FOR FY 26-27 TRAFFIC SIGNAL ENHANCEMENTS AND IN THE SPECIAL PROVISIONS FOR FY 26-27 TRAFFIC SIGNAL ENHANCEMENTS and accepts all conditions and requirements contained therein.

_____
Bidder

_____ _____
By Date

******* SUBMIT THIS EXECUTED FORM WITH THE BID**

CITY OF RANCHO SANTA MARGARITA
PROPOSAL BID SHEETS
FOR
FY 26-27 TRAFFIC SIGNAL ENHANCEMENTS

Item	Description	Est. Quantity	Units	Unit Price	Total Cost
1	Prepare and Implement Water Pollution Control Plan / Best Management Practices	1	LS		
2	Prepare and Implement Traffic Control Plan	1	LS		
3	Prepare, Paint, & Install City Furnished Decorative Base Model No. BCSTE 1827	23	EA		
4	Prepare, Paint, & Install City Furnished Decorative Base Model No. BCSTE 2542	24	EA		
5	Prepare, Paint, & Install City Furnished Decorative Base Model No. BCSTE 2436	3	EA		
6	Prepare, Paint, & Install City Furnished Decorative Base Model No. BCSTE 3142	1	EA		
7	Prepare, Paint, & Install City Furnished Decorative Base Model No. BCSTE 1116	2	EA		
8	Prepare, Paint, & Install City Furnished Finials	27	EA		
9	Prepare, Paint, & Install City Furnished Scrolls	27	EA		
10	Prepare & Install City Furnished LED Pendant	27	EA		
11	Prepare & Paint Traffic Signal Pole, Type 1 (No Mast Arm)	23	EA		
12	Prepare & Paint Traffic Signal & Lighting Pole (Including Mast Arm)	28	EA		
13	Prepare & Paint Utility Cabinet	14	EA		
14	Prepare & Paint Push Button Pole	2	EA		
15	Install City-Provided Light Shields	15	EA		

BASE BID SUBTOTAL IN FIGURES: $_____

Item	Description	Est. Quantity	Unit	Unit Price	Total Cost
16	Mobilization (5% max of Base Bid Subtotal)	1	LS		

TOTAL BASE BID AMOUNT FOR BIT ITEMS 1-16 SHALL BE USED IN DETERMINING THE LOWEST BID AMOUNT RECEIVED:

TOTAL BASE BID AMOUNT IN FIGURES:

$_____

TOTAL BID AMOUNT IN WORDS:

_____DOLLARS.

AND_____CENTS.

NOTE: THE ESTIMATED QUANTITIES SHOWN HEREIN ARE APPROXIMATE AND ARE TO BE USED ONLY AS COMPARISON OF BIDS. PAYMENT FOR QUANTITIES WILL BE MADE FOR ACTUAL QUANTITIES USED ON THE JOB. THE CITY RESERVES THE RIGHT TO INCREASE OR DECREASE THE AMOUNT OF ANY QUANTITY SHOWN AND TO DELETE ALL OR ANY ITEM FROM THE CONTRACT. IF THERE IS A CONFLICT BETWEEN THE UNIT PRICE PROVIDED AND TOTAL COST, THE UNIT PRICE SHALL PREVAIL. IF THERE IS A CONFLICT BETWEEN THE "TOTAL BASE BID AMOUNT FIGURES" AND THE "TOTAL BASE BID AMOUNT IN WORDS", THE "TOTAL BASE BID AMOUNT IN WORDS" SHALL PREVAIL.

CITY OF RANCHO SANTA MARGARITA

PROPOSAL BID SHEETS
FOR
FY 26-27 TRAFFIC SIGNAL ENHANCEMENTS

PROPOSAL

IN WITNESS WHEREOF, BIDDER executes and submits this proposal with the names, titles, hands, and seals of all forenamed principals this _____ day of _____, 20___.

BIDDER _____

_____

_____

_____

Subscribed and sworn to before me this _____ day of _____, 20____.

SIGNATURE NOTARY PUBLIC _____ (Attach Jurat)

By_____
(PRINT)

_____
(SIGNATURE)

(SEAL)

Title_____

CITY acknowledges that this proposal was received and opened at the time and in the place specified, and that it was accompanied by the required guarantee in the minimum amount of ten percent (10%) of the total bid.

By _____

Title _____

CITY OF RANCHO SANTA MARGARITA

CONTRACT AGREEMENT
FOR
FY 26-27 TRAFFIC SIGNAL ENHANCEMENTS

THIS CONTRACT AGREEMENT (hereinafter "Agreement" or "Contract" or "Contract Agreement") is made and entered into for the above stated Project this _____ day of _____, 20_____, BY AND BETWEEN THE **CITY OF RANCHO SANTA MARGARITA**, as CITY, and_____, as CONTRACTOR.

WITNESSETH that CITY and CONTRACTOR have mutually agreed as follows:

ARTICLE I

The contract documents for the aforesaid Project shall consist of the Notice Inviting Sealed Bids, Instructions to Bidders, Proposal Documents, Contract Documents, General Specifications, Standard Specifications, Special Provisions, Plans, and all referenced specifications, details, standard drawings, and all appendices attached hereto, together with this Contract Agreement and all required bonds, insurance coverage, permits, notices, and affidavits; and also including any and all addenda or supplemental agreements clarifying, amending, or extending the work contemplated as may be required to ensure its completion in an acceptable manner (hereinafter collectively the "Contract Documents"). All of the provisions of said Contract Documents are attached hereto and are incorporated by reference herein and made a part of this Contract Agreement as though fully set forth herein.

ARTICLE II

For and in consideration of the payments and agreements to be made and performed by CITY, CONTRACTOR agrees to furnish all materials and perform all work required for the above stated project, and to fulfill all other obligations as set forth in the aforesaid Contract Documents.

ARTICLE III

CONTRACTOR agrees to receive and accept the prices set forth in the Proposal as full compensation for furnishing all materials, performing all work, and fulfilling all obligations hereunder. Said compensation shall cover all expenses, losses, damages, and consequences arising out of the nature of work during its progress or prior to its acceptance including those for well and faithfully completing the work and the whole thereof in the manner and time specified in the aforesaid Contract Documents; and also including those arising from actions of the elements, unforeseen difficulties or obstructions encountered in the prosecution of the work, suspension or discontinuance of the work, and all other unknowns or risks of any description connected with the work.

ARTICLE IV

CITY hereby promises and agrees to employ, and does hereby employ, CONTRACTOR to provide the materials, do the work, and fulfill the obligations according to the terms and conditions herein contained and referred to, for the prices aforesaid, and hereby contracts to pay the same at the time, in the manner, and upon the conditions set forth in the Contract Documents.

ARTICLE V

CONTRACTOR acknowledges the provisions of the Labor Code requiring every employer to be insured against liability for workers' compensation, or to undertake self-insurance in accordance with the provisions of that code, and certifies compliance with such provisions.

ARTICLE VI

CONTRACTOR affirms that the signatures, titles, and seals set forth hereinafter in execution of this Agreement represent all individuals, firm members, partners, joint ventures, and/or corporate officers having a principal interest herein.

ARTICLE VII

CONTRACTOR hereby represents and warrants that it will comply with all of the provisions of the Federal Immigration and Nationality Act, 8 U.S.C. Section 1101, *et seq*., as amended, and in connection therewith, shall not employ unauthorized aliens as defined therein. Should CONTRACTOR so employ such unauthorized aliens for the performance of any work and/or services under this Agreement, and should any liability or sanctions be imposed against CITY for such use of unauthorized aliens, CONTRACTOR hereby agrees to reimburse CITY for any and all liabilities, actions, suits, claims, demands, losses, costs, judgments, arbitration awards, settlements, damages, demands, orders, or penalties which arise out of or are related to such employment, together with any and all costs, including attorneys' fees, incurred by CITY.

ARTICLE VIII

To the fullest extent permitted by law, CONTRACTOR shall defend (at CONTRACTOR's sole cost and expense), indemnify, protect, and hold harmless CITY, its elected and appointed officials, officers, employees, agents, and volunteers (collectively the "Indemnified Parties"), from and against any and all liabilities, actions, suits, claims, demands, losses, costs, judgments, arbitration awards, settlements, damages, demands, orders, penalties, and expenses including legal costs and attorney fees (collectively "Claims"), including but not limited to Claims arising from injuries to or death of persons (CONTRACTOR's employees included), or for damage to property, including property owned by CITY, which Claims arise out of, pertain to, or are related to CONTRACTOR's performance under the Agreement. Under no circumstances shall the insurance requirements and limits set forth in this Agreement be construed to limit CONTRACTOR's indemnification obligation or other liability hereunder. Notwithstanding the foregoing, such obligation to defend, hold harmless, and indemnify the CITY, its elected and appointed officials, officers, employees, agents, and volunteers, shall not apply to such claims or liabilities arising from the sole or active negligence or willful misconduct of CITY.

ARTICLE IX

CONTRACTOR shall be familiar with, observe, and comply at all times during the term of this Agreement with any work rules for contractors as may be established and promulgated by the City Manager, which work rules shall be additional terms and conditions for providing the work and services to the CITY pursuant to this Agreement, as may be updated and/or amended from time to time at the sole discretion of the City Manager.

[SIGNATURES ON NEXT PAGE]

CONTRACT AGREEMENT

IN WITNESS WHEREOF the parties hereto have caused this Agreement to be executed the day and year first written.

CITY:

L. ANTHONY BEALL, MAYOR
CITY OF RANCHO SANTA MARGARITA

ATTEST:

AMY DIAZ, CITY CLERK
CITY OF RANCHO SANTA MARGARITA

GREGORY E. SIMONIAN, CITY ATTORNEY
CITY OF RANCHO SANTA MARGARITA

CONTRACTOR:

(CORPORATION (NAME - TYPE))

BY: _____
(PRINT)

_____
(SIGNATURE)

_____
(TITLE)

BY: _____
(PRINT)

_____
(SIGNATURE)

_____
(TITLE)

NOTE: SIGNATURES OF CORPORATE OFFICIALS MUST BE NOTARIZED, ATTACH JURAT.

Bond Amount $_____
Bond Number _____

FAITHFUL PERFORMANCE BOND

KNOW ALL PERSONS BY THESE PRESENTS:

THAT WHEREAS, on _____ , the City of Rancho Santa Margarita, California ("City") awarded a public works contract (the "Contract"), delineated as Contract No. _____, for the _____ , as specified in the Contract, to, _____ , a _____, hereby designated as the "Principal", which Contract is attached hereto, and which Contract and all documents incorporated therein by reference are expressly incorporated into this bond by reference.

(DATE OF AWARD)

(NAME OF PROJECT AND/OR DESCRIPTION OF WORK)

(NAME OF CONTRACTOR)

(CONTRACTOR ENTITY TYPE i.e.; INC., LLC., ETC.)

AND WHEREAS, the Principal is required under the terms of the Contract to furnish a bond for the faithful performance of the Contract.

NOW, THEREFORE, we, the Principal, and _____ (the "Surety"), an admitted surety insurer in the State of California, are held firmly bound unto the City of Rancho Santa Margarita in the sum of _____ and ___/100 DOLLARS ($_____), lawful money of the United States of America, for the payment of which sum, well and truly be made, we bind ourselves, our heirs, executors, administrators, successors, and assigns, jointly and severally, firmly by these presents.

(NAME OF SURETY)

THE CONDITIONS OF THIS OBLIGATION ARE SUCH THAT:

1. If the Principal, its heirs, executors, administrators, successors or assigns, shall in all things stand to and abide by, and well and truly do and perform all of the covenants and obligations of the Contract, including the provisions for liquidated damages in said Contract, and including any and all amendments, supplements, and alterations made to the Contract as provided therein, on the Principal's part to be done and performed at the times and in the manner specified in the Contract, and shall indemnify and save harmless the City, its officers and agents as specified in the Contract, then this obligation shall be null and void, otherwise it shall be and remain in full force and effect;

2. In the event the Principal fails to fully perform all requirements in accordance with the terms and conditions of the Contract, then the Surety shall enforce performance by the Principal or shall pay the City for the same in an amount not exceeding the amount specified in this bond.

FAITHFUL PERFORMANCE BOND
(PAGE 2 OF 2)

3. In the event suit is brought upon this bond by the City and judgment is recovered, as part of the obligation secured hereby and in addition to the face amount specified in this bond, the Surety shall pay all costs incurred by the City in such suit, including reasonable attorneys' fees to be fixed by the court.

4. The Surety, for value received, hereby stipulates and agrees that no change, extension of time, alterations, additions, omissions or other modifications to the terms of the Contract, or in the work to be performed or the material to be furnished under the Contract, or in the specifications or plans, whether or not made pursuant to the terms of the Contract, shall in any manner release either the Principal or Surety or affect the Surety's obligations on this bond, and it does hereby waive notice of any such changes, extensions, alterations, additions, omissions or other modifications.

IN WITNESS WHEROF, this instrument has been duly executed by the Principal and Surety above named on the ____ day of _____, 20_____ .

PRINCIPAL	SURETY
_____	_____
(Principal Name) (Seal)	(Surety Name) (Seal)
By: _____	By: _____
(Signature)	(Signature)
_____	_____
(Print Name and Title)	(Print Name and Title)
By: _____	By: _____
(Signature)	(Signature)
_____	_____
(Print Name and Title)	(Print Name and Title)
Principal Address and Telephone:	Surety Address and Telephone

Affix Corporate Seals
Attach Notary Acknowledgments for All Signatures
Attach Power-of-Attorney if Executed by Attorney-in-Fact

Bond Amount $_____
Bond Number _____

PAYMENT (LABOR AND MATERIAL) BOND

KNOW ALL PERSONS BY THESE PRESENTS:

THAT WHEREAS, on _____,the City of Rancho Santa Margarita,
(DATE OF AWARD)

California ("City") awarded a public works contract (the "Contract"), delineated as Contract No. _____, for the _____, as
(NAME OF PROJECT AND/OR DESCRIPTION OF WORK)

specified in the Contract, to, _____, a
(NAME OF CONTRACTOR)

_____, hereby designated as the "Principal", which
(CONTRACTOR ENTITY TYPE i.e.; INC., LLC., ETC.)

Contract is attached hereto, and which Contract and all documents incorporated therein by reference are expressly incorporated into this bond by reference.

AND WHEREAS, the Principal is required under the terms of the Contract to give this bond in connection with the execution of the Contract.

NOW, THEREFORE, we, the Principal, and _____ (the "Surety"), an admitted surety insurer in the State of California, are held firmly bound unto the City of Rancho Santa Margarita in the sum of _____ and ___/100 DOLLARS ($_____), lawful money of the United States of America, for the payment of which sum, well and truly be made, we bind ourselves, our heirs, executors, administrators, successors, and assigns, jointly and severally, firmly by these presents.

THE CONDITIONS OF THIS OBLIGATION ARE SUCH THAT:

1. If the Principal, or its subcontractors, or their respective heirs, executors, administrators, successors or assigns, shall fail to pay (a) any of the persons named in Section 9100 of the California Civil Code, (b) any amounts due under the California Unemployment Insurance Code with respect to work or labor performed under the Contract, or (c) any amounts required to be deducted, withheld, and paid over to the Employment Development Department from the wages of employees of the Principal and its subcontractors pursuant to Section 13020 of the California Unemployment Insurance Code with respect to such work or labor, then the Surety shall pay for the same, in an aggregate amount not exceeding the sum specified in this bond. In case suit is brought upon this bond, the Surety will pay reasonable attorney's fees to be fixed by the court.

PAYMENT (LABOR AND MATERIAL) BOND
(PAGE 2 OF 2)

2. This bond shall inure to the benefit of any of the persons named in Section 9100 of the California Civil Code so as to give a right of action to such persons or their assigns in any suit brought upon this bond.

3. The Surety, for value received, hereby stipulates and agrees that no change, extension of time, alterations, additions, omissions or other modifications to the terms of the Contract, or in the work to be performed or the material to be furnished under the Contract, or in the specifications or plans, whether or not made pursuant to the terms of the Contract, shall in any manner release either the Principal or Surety or affect the Surety's obligations on this bond, and it does hereby waive notice of any such changes, extensions, alterations, additions, omissions or other modifications.

IN WITNESS WHEREOF, this instrument has been duly executed by the Principal and Surety above named on the ____ day of _____, 20____.

PRINCIPAL	SURETY
_____	_____
(Principal Name) (Seal)	(Surety Name) (Seal)
By: _____	By: _____
(Signature)	(Signature)
_____	_____
(Print Name and Title)	(Print Name and Title)
By: _____	By: _____
(Signature)	(Signature)
_____	_____
(Print Name and Title)	(Print Name and Title)
Principal Address and Telephone:	Surety Address and Telephone

Affix Corporate Seals
Attach Notary Acknowledgments for All Signatures
Attach Power-of-Attorney if Executed by Attorney-in-Fact

COMPENSATION INSURANCE CERTIFICATE

Pursuant to Section 1861 of the State Labor Code, each contractor to whom a public works contract has been awarded shall sign the following certificate and shall submit same to the City prior to performing any work on the contract:

"*I am aware of the provisions of Section 3700 of the Labor Code which requires every employer to be insured against liability for Workers' Compensation or to undertake self-insurance in accordance with the provisions of that Code, and I will comply with such provisions before commencing the performance of work of this contract*."

_____
Contractor

By_____
(PRINT)

_____
(SIGNATURE)

_____
Title

_____
Date

Section 3700 of the Labor Code reads as follows:

"Every employer except the State shall secure the payment of compensation in one or more of the following ways:

"(a) By being insured against liability to pay compensation in one or more insurers duly authorized to write compensation insurance in this state.

(b) By securing from the Director of Industrial Relations a certificate of consent to self-insure, which may be given upon furnishing proof satisfactory to the Director of Industrial Relations of ability to self-insure and to pay any compensation that may become due to his employee."

COMPENSATION INSURANCE CERTIFICATE

TO BE SUBMITTED WITH CONTRACT

CITY OF RANCHO SANTA MARGARITA

GENERAL SPECIFICATIONS
FOR
FY 26-27 TRAFFIC SIGNAL ENHANCEMENTS

SCOPE OF WORK

In general, the work is comprised of mobilization, traffic control, best management practices, pole and cabinet preparation and painting, installation of decorative features, and other miscellaneous improvements and incidental work in this specification document as shown on the plans and as required to complete the work.

LOCATION OF WORK

The Project is located at the following intersections:

1) Vereda Laguna and Antonio Parkway
2) Avenida de las Flores and Camino Montana
3) Avenida de las Flores and Buena Suerte
4) Avenida de las Flores and Via Con Dios
5) Avenida de las Banderas and Esperanza
6) Avenida de las Banderas and Comercio
7) Avenida de las Banderas and Camino Altozano

TIME OF COMPLETION

The Contractor shall complete all work in every detail within 35 working days after the date of the Notice to Proceed.

The construction contract is anticipated to be awarded in December 2026. The City furnished decorative materials has a manufacturer's lead time of 12-14 weeks. The Notice to Proceed is expected to be issued in January 2027. The Contractor shall guarantee their pricing in the bid proposal as long as the City issues the Notice to Proceed with a start date in or before January 2027.

WORKING HOURS

The Contractor's activities shall be confined to the hours between 8:00 AM and 5:00 PM, Monday through Friday, excluding holidays, unless otherwise specified. Work shall be prohibited on Saturday, Sunday or Federal Holidays except as provided herein. Deviation from these hours will not be permitted without the prior consent of the Engineer, except in emergencies involving immediate hazard to persons or property.

Construction activities during City Special Events may be restricted by the City on primary arterial or access roads leading to the Special Events. The Contractor is responsible for requesting the schedule of Special Event prior to submitting a bid proposal and to plan their work accordingly during Special Events. No separate payment will be made for restrictions during Special Events, and payment shall be considered as included in the Contract Price.

TRAFFIC REQUIREMENTS

The Contractor shall provide delineation in accordance with the latest updated version of the California Manual on Uniform Traffic Control Devices (MUTCD). The Contractor shall schedule the order of his work such that no travel lanes are closed before 9:00 A.M. or after 3:30 P.M. daily. A minimum of one through travel lane in each direction and one turning lane in each direction shall be maintained at all times during construction between 9:00 A.M. and 3:30 P.M, unless otherwise approved by City in writing. The same number of travel lanes currently in use (at the time of bid) shall be opened to traffic each and every day between 3:30 P.M. and 9:00 A.M. No work that interferes with public traffic shall be performed after 3:30 P.M. or before 9:00 A.M. No street closures shall be made. The traffic signal and traffic signal detectors shall remain operational during the construction until their replacement is scheduled within 5 days of disruption. Night work shall only be allowed with approved, written approval by the City Engineer, at the contractor's request, and shall be completed at no additional cost if approved.

Separation between travel lanes shall be accomplished by the use of delineators placed at a maximum of 15' on center. Traffic channelization at intersections shall be accomplished by the use of delineators placed at a maximum of 10' on center.

UTILITY REQUIREMENTS

The Contractor is advised of the existence of the utility notification service provided by UNDERGROUND SERVICE ALERT (USA). USA member utilities will provide the Contractor with the precise locations of their substructures in the construction area when the Contractor gives at least 48 hours' notice to the Underground Service Alert by calling 1(800) 422-4133. Contractor shall provide the City with proof of contact with USA upon request.

The Contractor shall notify the following agencies at least 48 hours in advance of excavating around any of their structures. The utility companies listed below can be contacted as indicated.

1. Southern California Gas Company
   1919 State College
   Anaheim, California 92806
   Andrew Alday (714) 385-3377

2. AT&T
   3939 E. Coronado Street, 2nd Fl.
   Anaheim, California 92807
   Vic Perez (714) 666-5696

3. Southern California Edison
   14155 Bake Parkway
   Irvine, California 92618
   Todd Tate (949) 458-4444

4. Santa Margarita Water District
   26111 Antonio Parkway
   Las Flores, CA 92688
   Karla Houlihan (949) 459-6581

5. Cox Communications
   29947 Avenida de Las Banderas
   Rancho Santa Margarita, California 92688
   Rod Rounds (949) 546-2774

6. Trabuco Canyon Water District
   32003 Dove Canyon Drive
   Trabuco Canyon, CA 92679
   Lorrie Lausten (949) 858-0277

The California Public Utilities Commission mandates that, in the interest of public safety, main line gas valves be maintained in a manner to be readily accessible and in good operating condition. The Contractor shall notify the Southern California Gas Company (714) 634-3185 at least 2 working days prior to the start of construction.

The Contractor shall exercise extreme care to protect all existing utilities in place whether shown on the plans or not, and shall assume full responsibility for all damage resulting from his operations. The Contractor shall coordinate with each utility company as to the requirements and methods for protection of their facilities during the construction period, and shall be responsible for preparation and processing of any required plans or permits. The Contractor shall assume full responsibility to maintain uninterrupted service for all utilities.

By submitting a bid, the Contractor acknowledges the above referenced utility work to be done in conjunction with this Project. The Contractor shall schedule his work and conduct his operations so as to permit access and time for the required utility work to be accomplished during the progress of the work.

The Contractor shall coordinate with each utility company as to the extent of required work and the time required to do so. The Contractor shall include this time in his schedule. Payment for the above, if any, shall be deemed as included in the items of work as shown on the proposal bid sheet and no additional compensation will be allowed.

FLOW AND ACCEPTANCE OF WATER

It is anticipated that storm, surface or other waters will be encountered at various times and locations during the work herein contemplated. The Contractor, by submitting a bid, acknowledges that he has investigated the risk arising from such waters and has prepared his bid accordingly, and Contractor, by submitting a bid, assumes all of said risk.

REMOVAL OF WATER

The Contractor shall provide and maintain at all times during construction ample means and devices to promptly remove and properly dispose of all water entering the excavations or other parts of the work. No concrete footing or floor shall be laid in water nor shall water be allowed to rise over them until the concrete or mortar has set at least two (2) hours. Water shall not be allowed to rise unequally against any walls for a period of twenty-eight (28) days. Dewatering for the structures and pipelines shall commence when ground water is first encountered, and shall be continuous until such time as water can be allowed to rise in accordance with the above statement. Dewatering shall be accomplished by well points or some other method which will insure a dry hold and preservation of final lines and grade of the bottoms of excavation, all subject to the approval of the City Engineer.

Dewatering methods and disposal of water from dewatering operations shall be the sole responsibility of the Contractor and shall conform to the requirements of the State Regional Water Quality Control Board, the requirements of the National Pollution Discharge Elimination System (NPDES), and the Federal Clean Water Act. Full compensation for dewatering shall be considered as included in the contract prices paid for the related items of work, and no additional compensation will be allowed therefore.

STANDARD SPECIFICATIONS

The Standard Specifications of the City are contained in the 2021 edition of the STANDARD SPECIFICATIONS FOR PUBLIC WORKS CONSTRUCTION, also known as the “Greenbook”, including all supplements, as written and promulgated by the Joint Cooperative Committee of the Southern California Chapter of the American Public Works Association and the Southern California District of the Associated General Contractors of California, which is incorporated

herein by this reference. Copies of these Standard Specifications are available from the publisher:

BNi Building News
Division of BNi Publications, Inc.
990 Park Center Drive, Suite E
Vista, California 92801
(760) 734-1113

The Standard Specifications set forth above will control the general provisions for this Contract except as amended by the Plans, General Specifications, Special Provisions, or other Contract Documents.

The section numbers of the following Special Provisions coincide with those of the said Standard Specifications. Only those sections requiring amendment, elaboration, addition, or that are specifying options are stated in the Special Provisions.

In case of conflict between the Standard Specifications and the General Specifications or Special Provisions, the General Specifications and Special Provisions shall take precedence over and be used in lieu of such conflicting portions of the Standard Specifications.

References in the Special Provisions to "Caltrans Standard Specifications" shall mean the latest edition of the Standard Specifications of the State of California, Department of Transportation. Copies of these specifications and standard drawings may be obtained from:

California Department of Transportation
Publications Distribution Unit
1900 Royal Oaks Drive
Sacramento, California 95815-3800
Telephone (916) 263-0822
Fax (916) 263-0470

References in the Special Provisions to Standard Plans shall mean the Standard Plans for Public Works Construction, latest edition (written and promulgated by the Public Works Standards, Inc.), and, where applicable and as determined and selected by the City Engineer, those specific standard plans of the City of Rancho Santa Margarita, the County of Orange and/or the State Department of Transportation, latest editions.

Where the Plans or Specifications describe portions of the work in general terms, but not in complete detail, it is understood that the item is to be furnished and installed complete and in place and that only the best general practice is to prevail and that only materials and workmanship of the first quality are to be used. Unless otherwise specified, the Contractor shall furnish all labor, materials, tools, equipment and incidentals, and do all the work involved in executing the contract.

WAGE RATES AND LABOR CODE REQUIREMENTS

The City has determined that the work on this Project requires work of labor categories which are subject to the State of California Department of Industrial Relations prevailing rates of per diem wages.

Contractor is aware of the requirements of California Labor Code Section 1720, et seq., and 1770, et seq., as well as California Code of Regulations, Title 8, Section 16000, et seq., ("Prevailing Wage Laws"), which require the payment of prevailing wage rates and the performance of other requirements on "public works" and "maintenance" projects. Contractor agrees to fully comply with all applicable federal and state labor laws (including, without limitation, if applicable, the Prevailing Wage Laws). It is agreed by the parties that, in connection with the work provided pursuant to the Agreement, Contractor shall bear all risks of payment or non-payment of prevailing wages under California law, and Contractor hereby agrees to defend, indemnify, and hold the City, its elected officials, officers, employees, and agents free and harmless from any claim or liability arising out of any failure or alleged failure to comply with the Prevailing Wage Laws. The foregoing indemnity shall survive termination of the Agreement.

Contractor understands and agrees to comply with the following California Labor Code compliance conditions [Labor Code Sections 1720 et seq., 1813, 1860, 1861, 3700]:

a) The Agreement is subject to the provisions of Division 2, Part 7, Chapter 1 (commencing with Section 1720) of the California Labor Code relating to public works and the awarding public agency ("City") and Contractor agree to be bound by all the provisions thereof as though set forth in full herein.

b) Contractor shall be registered with the Department of Industrial Relations ("DIR") in accordance with California Labor Code Section 1725.5 and has provided proof of registration to City prior to the effective date of this Agreement.

c) Contractor agrees to comply with the provisions of California Labor Code Sections 1771, 1774 and 1775 concerning the payment of prevailing rates of wages to workers and the penalties for failure to pay prevailing wages. The applicable prevailing wage determination(s) may be obtained at (http://www.dir.ca.gov/OPRUDPreWageDetermination.htm), are on file with City, and are available to any interested party upon request. A copy of said rates shall be posted at each job site during the term of this Agreement.

d) Pursuant to California Labor Code Section 1771.4, Contractor's services are subject to compliance monitoring and enforcement by the Department of Industrial Relations. Contractor shall post job site notices as prescribed by DIR regulations and furnish the records specified in California Labor Code Section 1776 directly to the Labor Commissioner in the manner prescribed by California Labor Code Section 1771.4(a)(3) and (c)(2).

e) Eight (8) hours of labor shall constitute a legal day's work for all workmen employed in the execution of this Agreement, and the Contractor and any subcontractor shall comply with and be governed by the laws of the State of California having to do with working hours set forth in Division 2, Part 7, Chapter 1, Article 3 of the California Labor Code. Contractor shall comply with the provisions of California Labor Code Section 1813 concerning penalties for workers who work excess hours. Contractor shall, as a penalty to the City, forfeit twenty-five dollars ($25) for each worker employed in the execution of this Agreement by the Contractor or by any subcontractor for each calendar day during which such worker is required or permitted to work more than eight (8) hours in any one calendar day and forty (40) hours in any one calendar week in violation of the provisions of Division 2, Part 7, Chapter 1, Article 3 of the California Labor Code. (*See, e.g.,* Cal. Labor Code §1815.)

f) Pursuant to California Labor Code Section 1771.1, Contractor and any subcontractor shall not be qualified to bid on, be listed in a bid proposal, subject to the requirements of Section 4104 of

the California Public Contract Code, or engage in the performance of any contract for public work on a public works project unless registered with the DIR and qualified to perform public work pursuant to California Labor Code Section 1725.2. It is not a violation of California Labor Code Section 1771.1 for an unregistered contractor to submit a bid that is authorized by California Business and Professions Code Section 7029.1 or by California Public Contract Code Section 10164 or 20103.5, provided the contractor is registered to perform public work pursuant to Section 1725.5 at the time the contract is awarded. Contractor shall not perform any work under this Agreement with any subcontractor who is ineligible to perform work on the public works project pursuant to Section 1777.1 or 1777.7 of the California Labor Code.

Apprentices

Section 1777.5 requires the Contractor or Subcontractor employing tradesmen in any apprenticeable occupation to apply to an applicable apprenticeship committee that can supply apprentices to the site of the public works project and which administers the apprenticeship program in that trade for a certificate of approval. The certificate will also fix the ratio of apprentices to journeymen to be used in the performance of the Contract.

The Contractor is required to make contributions to funds established for the administration of apprenticeship programs if he employs registered apprentices or journeymen in any apprenticeable trade and if other Contractors on the public works site are making such contributions.

Information relative to apprenticeship standards, contributions, wage schedules and other requirements may be obtained from the State Director of Industrial Relations or from the Division of Apprenticeship Standards.

RESOLUTION OF CONSTRUCTION CLAIMS

California Public Contract Code (PCC) section 9204 as adopted by Assembly Bill 626 prescribes a process to present, confer, and mediate all construction claims relating to the City's public works project.

"Public works project" means the erection, construction, alteration, repair, or improvement of any public structure, building, road, or another public improvement of any kind.

"Claim" means a separate demand by the Contractor sent by registered mail or certified mail with return receipt requested for (A) a time extension, including, without limitation for relief from damages or penalties for delay assessed by a public entity under a contract for a public works project (B) payment of money or damages arising from work done by or on behalf of the Contractor pursuant to the contract for a public works project and payment for which is not otherwise expressly provided or to which the claimant is not otherwise entitled, or the amount the payment of which is disputed by the local agency. (PCC 9204(c)(1))

For any claim subject to this article, PCC section 9204 requires the following:

a) The claim shall be submitted by the Contractor in writing, sent by registered mail or certified mail with return receipt requested and must include the documents necessary to substantiate the claim. Nothing in this subdivision is intended to extend the time limit or supersede notice requirements otherwise provided by contract for the filing of claims. However, upon receipt of

a claim, the City, and the Contractor may, by mutual agreement, extend the time period provided by statute.

b) For claims of all amounts, the City shall respond within 45 days of receipt of the claim, and provide the claimant a written statement identifying which portion of the claim is disputed and which portion of the claim is undisputed. If the City requires approval from the City Council, and the City Council does not meet within the 45-day period to respond, the City shall have up to three days to issue its response following the City Council meeting.

c) For all portions of a claim determined to be undisputed, the City must process payment to the claimant within 60 days of issuing the City's written determination.

d) If the claimant disputes the City's response, or if the City fails to respond within the time limits provided, the claimant may demand an informal conference to meet and confer for settlement of the issues in dispute. The demand must be sent in writing by registered or certified mail, return receipt requested. Upon receipt of a demand, the City must schedule a meet and confer conference within 30 days for settlement of the disputed claim.

e) Within 10 business days following the conclusion of the meet and confer conference, if any portion of the claim remains in dispute, the City shall provide the claimant an addition written statement identifying the portion of the claim that is undisputed and the portion that remains in dispute.

f) For all portions of a claim determined to be undisputed, the City must process payment to the claimant within 60 days of issuing the City's written determination.

g) Any remaining undisputed portion of the claim, as identified by the Contractor in writing, shall be submitted to nonbinding mediation in which the parties share the cost evenly. The City and the claimant shall mutually agree on a mediator within 10 business days after the disputed portion of the claim has been identified in writing. If the parties cannot agree, each party shall select a mediator and those mediators shall jointly select a qualified, neutral third party to mediate the remaining undisputed claim. Each party shall bear the respective costs charged by its respective mediator in connection with the selection of the neutral mediator. If mediation is unsuccessful, the parts of the claim remaining in dispute shall be subject to applicable procedures outside of PCC section 9204.

Unless otherwise agreed to by the City and the Contractor in writing, the mediation conducted pursuant to this section shall excuse any further obligation under PCC Section 20104.4 to mediate after litigation has been commenced.

PCC Section 9204 does not preclude the City from requiring arbitration of disputes under private arbitration or the Public Works Contract Arbitration Program if mediation under this section does not resolve the parties' dispute.

Should the City fail to respond to a claim, or fail to issue written statements as required, the Contractor's claim is deemed denied. A claim denied by reason of the City's failure to respond shall not constitute an adverse finding with regard to the merits of the claim or the responsibility or qualifications of the claimant.

Amounts not paid in a timely manner as required by PCC 9204 shall bear interest at seven percent per annum.

NOTICE OF THIRD-PARTY CLAIMS

In accordance with PCC Section 9201, the City will provide timely notification to Contractor of the receipt of any third-party claim relating to the Agreement. The Contractor agrees to reimburse the City for its reasonable costs incurred in providing such notice.

CLAYTON ACT AND CARTWRIGHT ACT

In accordance with Section 7103.5 of the Public Contract Code, in entering into a public works contract or a subcontract to supply goods, services or materials pursuant to a public works contract, the contractor or subcontractor offers and agrees to assign to the awarding body all rights, and interest in and all causes of action it may have under Section 4 of the Clayton Act (15 U.S.C. Sec. 15) or under the Cartwright Act (Chapter 2 (commencing with Section 16700) of Part 2 of Division 7 of the Business and Professions Code), arising from purchases of goods, services, or materials pursuant to the public works contract or the subcontract. This assignment shall be made and become effective at the time the awarding body tenders final payment to the contractor, without further acknowledgment by the parties.

CITY OF RANCHO SANTA MARGARITA

SPECIAL PROVISIONS
FOR
SPECIFICATIONS FOR

FY 26-27 TRAFFIC SIGNAL ENHANCEMENTS

PART 1 - GENERAL PROVISIONS

SECTION 1 - GENERAL

1-2 TERMS AND DEFINITIONS. [Add the following to this section]:

City	- **City of Rancho Santa Margarita**
Board	- City Council
Caltrans	- California Department of Transportation
County	- County of Orange
Engineer	- City Engineer
Federal	- United States of America
State	- State of California
Contractor	- Contractor, its workers, employees and agents
Project	- FY 26-27 TRAFFIC SIGNAL ENHANCEMENTS

1-3 ABBREVIATIONS.

1-3.2 Common Usage. [Add the following to this section]:

MUTCD	- Manual of Uniform Traffic Control Devices, including the California Supplement
OCPW	- Orange County Public Works Department
SPPWC	- Standard Plans for Public Works Construction
SSPWC	- Standard Specifications for Public Works Construction
FHWA	- Federal Highway Administration
HUD	- Housing and Urban Development

1-7 AWARD AND EXECUTION OF THE CONTRACT.

Within three (3) business days of bid opening, Contractor must submit:

- If a bid bond is submitted with a 10% of Bid designation for the amount as noted in the City Approved Bid Bond form, a revised Bid Bond with numerical dollar values, both in words and with digits, shall be submitted to the City within three (3) days of bid opening.

Within five (5) working days after the date of the Notice of Apparent Low Bidder, the Contractor shall execute and return the following documents to the City:

- All Insurance Requirements set forth herein
- Two (2) Original Signed Contract Agreements

Within ten (10) working days after the date of the Notice of Award, the Contractor shall execute and return the following documents to the City:

- Faithful Performance Bond
- Material and Labor Bond
- Construction Schedule
- Traffic Control Plan
- Water Pollution Control Plan
- Form W-9
- Encroachment Permit Application
- Construction Materials Submittals

FAILURE TO COMPLY WITH ALL OF THE ABOVE WILL RESULT IN ANNULMENT OF THE AWARD AND FORFEITURE OF THE PROPOSAL GUARANTEE AT THE SOLE DISCRETION OF City.

The Contract Agreement shall not be considered binding upon the City until executed by the authorized City officials. A corporation to which an award is made may be required, before the Contract Agreement is executed by the City, to furnish evidence of its corporate existence, of its right to enter into contracts in the State of California, and that the officers signing the Contract and bonds for the corporation have the authority to do so.

1-7.2 Contract Bonds. [Replace this section with the following]:

Both the Faithful Performance Bond and the Material and Labor Bond shall each be for not less than one hundred percent (100%) of the total Contract amount. The Material and Labor Bond shall remain in force until thirty-five (35) days after the date of recordation of the Notice of Completion. The Faithful Performance Bond will be held for one year after the date of recordation of the Notice of Completion.

Prior to the acceptance of any bond, the City shall verify that the surety is an admitted surety in the State of California. If requested by the City, the Contractor shall provide other information specified in the Code of Civil Procedure Section 995.660 to enable the City to verify the sufficiency of the bond.

Should any bond become insufficient, the Contractor shall correct the insufficiency within ten (10) calendar days after receiving notice from the City. The Contractor shall provide the City with evidence of the correction within ten (10) calendar days of said correction. Should any surety at any time be unsatisfactory to the City, written notice will be given to the Contractor to that effect. No further payments shall be deemed due or will be payable under the Contract until Contractor submits an acceptable bond from a surety accepted by the City. Changes to the work or extensions of time made pursuant to the Contract Agreement shall in no way release the Contractor or the surety from its obligations. Notice of such changes or extensions shall be waived by the surety.

SECTION 2 – SCOPE OF THE WORK.

2-1.1 PLANS AND SPECIFICATIONS [Add the following to this section]:

The Contractor shall maintain a control set of Plans and Specifications on the Project site at all times. All final locations determined in the field, and any deviations from the Plans and Specifications, shall be marked in red on this control set to show the as-constructed conditions. Upon completion of all work, the Contractor shall return the control set to the Engineer. Final payment will not be made until this requirement has been met.

2-2 PERMITS. [Replace this section with the following]:

Prior to the start of any work, the Contractor shall take out the applicable City, County, State and Federal permits and make arrangements for inspections. Requests for inspections shall be made to the City at least 24 hours in advance of need. The Contractor and all subcontractors shall each obtain and pay all fees for any and all other permits, licenses, inspections, certificates, or authorizations required by any governing body or public utility. Payment for this work shall be included in the various bid items of work and no additional compensation will be allowed. The City will waive the usual City encroachment permit fees. **The City's Encroachment Permit Application is included in Appendix D.**

Further, Contractor shall ensure that its employees, agents, contractors, and subcontractors conduct themselves in compliance with such laws and licensure requirements including, without limitation, compliance with laws applicable to nondiscrimination, sexual harassment, and ethical behavior throughout the duration of the Contract. Contractor shall not retain or employ an unlicensed subcontractor to perform work pursuant to this Contract. Contractor shall notify the City immediately and in writing of its employees', agents', contractors' or subcontractors' inability to obtain or maintain, irrespective of the pendency of any appeal, any such licenses, permits, approvals, certificate, waivers, and exemptions that may be required. Such inability shall be cause for termination of this Contract

2-3 RIGHT-OF-WAY. [Add the following to this section]:

The City will acquire all rights of way, easements and rights of entry as required for this Project. The Contractor shall verify that the acquisition(s) is completed prior to beginning any work outside of the public right of way. All cost for re-mobilization, downtime, etc. due to delays in obtaining the required rights of way, easements and rights of entry shall be included in all other items of work and no additional compensation will be allowed. In the event the required easements have not yet been acquired by the City, the Contractor shall conduct its operation so as to confine its work to the limits of the existing right-of-way.

2-4 COOPERATION AND COLLATERAL WORK. [Add the following to this section]:

The Contractor is advised as to the possibility of other construction projects within the proposed construction zone by the City, other governing agencies or private enterprises. In the event of such projects, the Contractor shall coordinate with the applicable parties as to the extent of any time required to complete their work and shall schedule its work and conduct its operations so as to permit access and time as required for the concurrent work. The Contractor shall immediately notify the City Engineer in the event of a delay in scheduling caused solely by this concurrent work. Payment for the above, if any, shall be deemed as included in the items of work as shown on the proposal bid sheet and no additional compensation will be allowed.

2-5 THE CONTRACTOR'S EQUIPMENT AND FACILITIES.

2-5.1 General. [Add the following to this section]:

Conduct of the Work. The Contractor shall behave, at all times, in a courteous, professional manner. While on site, or entering or exiting the site, there shall be no extraneous activity that might cause disruption to the Project site, surrounding areas, or residents. Failure to comply may result in the suspension of work, or removal of contractor's staff from the Project.

Noise Levels. A noise level limit of 86 dbA at a distance of fifty feet (50') shall apply to all construction equipment on or related to the job whether owned by the Contractor or not. The use of excessively loud warning signals shall be avoided except in those cases required for the protection of personnel.

2-8 EXTRA WORK.

2-8.1 Labor Surcharge [Add the following section]:

The labor surcharge compensates the Contractor for statutory payroll items stipulated by various governmental agencies. The six items included are worker's compensation, social security, Medicare, Federal unemployment insurance, State unemployment insurance, and State training taxes. Labor surcharge shall not exceed twenty percent (20%) of the actual cost for employee wages.

2-8.3 Markup. [Add the following section]:

(a) **Work by Contractor.** [Add the following to this section]: The following percentages shall be the maximum added to the Contractor's costs and shall constitute the markup for all overhead and profits:

1) Labor	20
2) Materials	15
3) Equipment Rental	15
4) Other Items and Expenditures	15

To the sum of the costs and markups provided for in this subsection, 1 percent shall be added as compensation for bonding.

(b) **Work by Subcontractor.** [Add the following to this section]: When all or any part of the extra work is performed by a Subcontractor, the markup established in 2-8.3(a) shall be applied to the Subcontractor's actual cost of such work. A markup of 10 percent on the first $5,000 of the subcontracted portion of the extra work and a markup of five (5) percent on work added in excess of $5,000 of the subcontracted portion of the extra work may be added by the Contractor.

The markups mentioned hereinafter shall include, but are not limited to, all costs for the services of superintendents, project managers, timekeepers and other personnel not working directly on the change order and pickup or yard trucks used by the above personnel. These costs shall be reported as labor or equipment elsewhere except when actually performing work directly on the change order and then shall only be reported at the labor classification of the work performed.

The costs of rental equipment shall not exceed the equipment rental rates in the surcharge and Equipment Rental Rates, as published by the State of California Business, Transportation, and Housing Agency and the California Department of Transportation, Division of Construction for the current fiscal year.

2-10 DISPUTED WORK. [Replace this section with the following]:

If the Contractor and the City are unable to reach an agreement on disputed work, the City may direct the Contractor to proceed as directed. The City shall have the option, at its own discretion,

to pay for said work through unilateral change order executed by the City after conducting its own analysis of the reasonable costs thereof. Although not to be construed as proceeding under extra work provisions in Section 7-4, the Contractor shall keep and furnish records of disputed work in accordance with Section 7-4.

In any case where the Contractor believes extra compensation is due the Contractor for work or materials not clearly covered in the Contract, or not ordered by the City as “extra work”, the Contractor shall notify the City in writing of the Contractor's intention to make claim for such extra compensation before the Contractor begins the work on which Contractor bases the claim. If such notification is not given, or the City is not afforded proper supporting documentation by the Contractor for keeping strict account of actual cost, then the Contractor shall be deemed to have waived the claims for such extra compensation. Such notice by the Contractor, and the fact that the City has kept account of the cost as aforesaid, shall not in any way be construed as proving the validity of the claim. The validity of the claim must be determined by the City. If the City determines that the claim is well founded, it shall be allowed and paid for as “extra work”; if the City determines that the claim is not well founded, it shall be disallowed and not paid.

SECTION 3 – CONTROL OF THE WORK.

3-10 SURVEYING.

3-10.4 Permanent Survey Markers. [Add the following to this section]:

Prior to start of construction, the Contractor shall inventory all existing survey monuments and ties within the Project limits. Monument records are for information purposes only and can be provided by the City upon request. The Contractor is responsible for ensuring that all survey monuments and ties are restored. The Contractor shall file a Corner Record Form referencing survey monuments subject to disturbance in the Office of the County Surveyor. A copy of the filing shall be provided to the City prior to commencement of any work.

The Contractor shall obtain prior approval from the Engineer before setting new survey monuments. When a change is made in the finished elevation of the pavement of any roadway in which a permanent survey marker is located, the Contractor shall install a new survey monument to the new grade within seven (7) days of finished paving. The survey monument shall be installed to match the existing type destroyed. The Contractor will then reset ties and file a Corner Record Form in the Office of the County Surveyor.

3-10.5 Survey Services. [Add the following to this section]:

The Contractor will provide any required surveying and construction staking for the construction of this Project unless noted otherwise. The Contractor shall be responsible for the work conforming to the lines, grades and benchmarks given by the Engineer. The Contractor shall establish supplementary benchmarks, elevations, lines and grades and any other controls which are not established by the Engineer and which are necessary to complete the work. Compensation for above work by the Contractor shall be included within the various items of work and no additional compensation will be allowed.

3-12 WORK SITE MAINTENANCE.

3-12.4 Storage of Equipment and Materials.

3-12.4.1 General. [Add the following to this section]:

The Contractor is required to, at his own expense, maintain and operate a work and storage area outside of the public right-of-way. In such case the Contractor shall submit to City written authorization from the owners of the subject property prior to occupation. Occupation of site without written authorization shall be grounds for immediate suspension of work. Location of site to be approved by City. Condition and operation of yard shall conform to these Specifications. The Contractor shall assume full responsibility for all damage to the site resulting from his operations and shall repair and/or replace same, at his own expense, to the satisfaction of the owner of the subject property. The Contractor shall vacate site and return it to pre-Project condition within five (5) working days following application for Notice of Completion. The Contractor shall obtain a written release from the property owner accepting the condition of the vacated site and releasing the Contractor from any further clean-up or restoration work and shall submit a copy of such release to City. The Notice of Completion will not be issued until said release is submitted.

3-12.4.2 Storage in Public Streets. [Replace this section with the following]:

The Contractor shall not store any equipment or material within the public right-of-way without written approval from the City. The City shall remove any equipment or material improperly stored within the City's right-of-way and deduct all costs associated with such work from any payment due the Contractor.

3-12.6 WATER POLLUTION CONTROL

3-12.6.2 Best Management Practices (BMPs). [Add the following to this section]:

Per the Federal Clean Water Act, the Contractor is required to eliminate pollution to waters of the United States in regards to this Project. This Project will require the Contractor to implement "Best Management Practices".

The Contractor shall submit a Water Pollution Control Plan (WPCP) as detailed in Appendix A. The Contractor shall confirm that all of the Best Management Practices (BMP's) have been adequately detailed that addresses his or her anticipated construction operations and meets the intent of the NPDES requirements. After the Notice of Award, the Contractor shall submit to the City a finalized and signed WPCP, which establishes the construction BMP requirements, for review and approval. No work will be allowed to begin without an approved WPCP on file with the City.

The Contractor shall utilize BMP's outlined in the WPCP during construction to ensure that sediment from storm runoff and construction activities does not enter storm drains. Some of the primary Water Pollution Control measures anticipated for this Project include, but are not limited to, covering all storm drain inlets in the Project vicinity with water permeable fabric and gravel bags prior to performing any adjacent AC grinding, removal or paving operations or PCC ramp lip grinding; properly fueling and cleaning all equipment/vehicles; maintaining an ample supply of gravel/sand bags on-hand when excavating new PCC sidewalk/ramp/curb/gutter improvements in the event of rain; properly containing all PCC treatment materials such as the coloring agents, exposed aggregate etching chemicals and surface treatment chemicals required to install the detectable warning mats; properly covering all incoming material trucks and all out going debris

hauling vehicles; providing restroom facilities for workers; and regular street sweeping of the work area and haul routes to the satisfaction of the Engineer.

The requirements of all of the following agencies shall be met and maintained and where there is a conflict between requirements, the most stringent requirement shall govern.

1. San Diego Regional Water Quality Control Board
2. County of Orange

3-12.6.5 Payment. [Replace this section with the following]:

Full compensation for providing all necessary Best Management Practices shall be considered as included in the Contract **Lump Sum** Price for **Prepare and Implement Water Pollution Control Plan / Best Management Practices** and shall include preparing and implementing the WPCP and furnishing all labor, tools, materials, and incidentals.

3-12.7 Cleanup and Dust Control. [Add the following to this section]:

The Contractor shall keep adjacent properties clean and free of rubbish and debris in a timely manner as necessary and/or as directed by the Engineer.

The Contractor shall implement effective handling, storage, usage, and disposal practices to control material pollution and manage waste and nonstormwater at the job site before they come in contact with storm drain systems and receiving waters.

3-12.8 Construction Cleaning [Add the following section]:

The Contractor shall:

(a) Initiate and maintain a daily program to prevent accumulation of debris on-site and along access roads and haul routes. Maintain areas under Contractor's control free of waste materials, debris, weeds 6” high, and rubbish. Maintain site in a clean and orderly condition.

(b) Provide suitable covered containers for deposit of debris and rubbish. Dispose of accumulation of extraneous materials, prohibit overloading of trucks to prevent spillages on access and haul routes and provide daily inspection of haul routes to enforce requirements.

(c) The Contractor shall supply self-loading motorized street sweepers equipped with a functional water spray system as part of his daily program.

(d) Schedule at a minimum, weekly collection and disposal of debris. Provide additional collections and disposals of debris whenever the weekly schedule is inadequate to prevent accumulation.

The Contractor shall remove debris from closed or remote spaces prior to closing the space, control cleaning operations to minimize dust and other particulates and immediately remove clay and earth which adhere to the paved surface of the roadway. Remove by hand scraping, washing, sweeping, and/or other method(s) which will leave a clean non-skid surface without impairing, injuring or loosening the surface.

The Contractor is required to control dust throughout the life of the Contract. The control may be required by job conditions or City Engineer. In any case, the Contractor shall use water or other means to control the dust. No chemical agents may be used without written authorization from the

Agency. The Contractor shall be solely responsible for safety problems, accidents or any other complications or claims arising from inadequate dust control.

No separate payment will be made for any work performed or material used to control dust resulting from the Contractor's performance of the work, or by public traffic, either inside or outside the right-of-way. Full compensation for such dust control will be considered as included in the price paid for the various items of work involved.

No separate payment will be made for any work performed or material used in cleaning the Project. Full compensation for such cleaning shall be considered as included in the price paid for the various items of work involved and no additional compensation will be allowed therefore.

3-13 COMPLETION, ACCEPTANCE, AND WARRANTY.

3-13.1 Completion. [Add the following to this section]:

The Contractor shall rebuild, repair, restore, and make good all injuries, losses, or damages to any portion of the work or the material occasioned by any cause before its completion and acceptance and shall bear the expense thereof. Where necessary to protect the work or materials from damage, the Contractor shall at his expense provide suitable drainage and erect such temporary structures as are necessary to protect the work or materials from damage.

3-13.2 Acceptance. [Add the following to this section]:

Until Acceptance of the work, the Contractor shall have the responsibility, charge and care of the Work and of the materials to be used therein (including materials for which it has received partial payment or materials which have been furnished by the City) and shall bear the risk of injury, loss or damage to any part thereof by the action of the elements or from any other cause, whether arising from the execution or from the non-execution of the work.

SECTION 4 - CONTROL OF MATERIALS

4-2 PROTECTION. [Add the following to this section]:

If ordered by the City Engineer, the Contractor shall, at his or her expense, properly store materials which have been partially paid for by the City or which have been furnished by the City. Such storage by the Contractor shall be on behalf of the City, the City shall at all times be entitled to the possession of such materials, and the Contractor shall promptly return the same to the site of the work when requested. The Contractor shall not dispose of any of the materials so stored, except on written authorization from the City.

4-3 INSPECTIONS.

4-3.1 General. [Add the following to this section]:

The City is responsible for inspection and material testing as part of the City's Quality Assurance Program. The Contractor is responsible for inspection and material testing as part of the Contractor's Quality Control Program. The Contractor shall pay for retests and re-inspections due to failure to meet Specifications. If the Contractor elects to work under this Contract more than 8 hours/day or more than 40 hours/week, Saturday, Sunday, or City holidays, it shall arrange with

the Engineer for the required inspection service and pay the Special Inspection Fees as provided by the Material Inspector and City Engineer. When Special Inspection is required, the Contractor shall notify the City and pay inspection fees 24 hours in advance. A 24-hour advanced notice will be given during working hours, exclusive of Saturday, Sunday or City holidays for the purpose of permitting the Engineer to make necessary assignments of his representatives. If the Contractor is directed by the City to work under this Contract more than 8 hours/day or more than 40 hours/week, the Special Inspection Fee requirements will be waived.

Inspection requests cancelled within 24 hours of the requested date for inspection shall be assessed a $250 cancellation fee and will be withheld from future payments due the Contractor.

In the event of either a requested or emergency deviation, inspection service fees will be charged against the Contractor. The service fees will be calculated at overtime rates (premium time) including benefits, overhead, and travel time and are established based on the City's current fee schedule or professional services agreement for construction inspection services. The service fees will be deducted from any amounts due the Contractor.

SECTION 5 – LEGAL RELATIONS AND RESPONSIBILITIES

5-1 LAWS AND REGULATIONS. [Add the following to this section]:

The Contractor, and all subcontractors, suppliers and vendors, shall comply with all City, State, and Federal orders regarding affirmative action to ensure equal employment opportunities and fair employment practices. Failure to file any report due under said orders will result in suspension of periodic progress payments.

The Contractor shall ensure unlimited access to the job site for all equal employment opportunity compliance officers.

5-3 LABOR.

5-3.3 Payroll Records. [Replace this section with the following]:

Contractor shall comply with the provisions of California Labor Code Section 1776 which, among other things, require Contractor and each subcontractor to (1) keep accurate payroll records, (2) certify and make such payroll records available for inspection as provided by Section 1776, and (3) inform the City of the location of the records. The Contractor is responsible for compliance with Section 1776 by itself and all of its subcontractors. Verified payroll records shall be submitted to the City by the tenth day of each month. Progress payments will be withheld pending receipt of any outstanding reports.

5-4 INSURANCE.

5-4.1 General

[Replace the second paragraph with the following]:

Insurance required by this section shall be issued by a licensed company authorized to transact business in the state by the Department of Insurance for the State of California with a current rating of A-:VII or better (if an admitted carrier), or a current rating of A:X or better (if offered by a

non-admitted insurer listed on the State of California List of Approved Surplus Line Insurers (LASLI), by the latest edition of A.M. Best's Key Rating Guide, except that the City will accept workers' compensation insurance from the State Compensation Fund. In the event the City determines that the work or services to be performed under this Agreement creates an increased or decreased risk of loss to the City, the Contractor agrees that the minimum limits of the insurance policies may be changed accordingly upon receipt of written notice from the City. Contractor shall immediately substitute any insurer whose A.M. Best rating drops below the levels specified herein.

5-4.1.1 Compliance with Insurance Requirements. [Add the following to this section]:

Contractor shall obtain, maintain, and keep in full force and effect during the term of this Agreement, at its sole cost and expense, and in a form and content satisfactory to City, all insurance required under this section. Contractor shall not commence any work or services under this Agreement unless and until it has provided evidence satisfactory to City that it has secured all insurance required under this section. If Contractor's existing insurance policies do not meet the insurance requirements set forth herein, Contractor agrees to amend, supplement or endorse the policies to do so.

5-4.1.2 Types of Insurance Required. [Add the following to this section]:

As a condition precedent to the effectiveness of this Agreement, and without limiting the indemnity provisions set forth in this Agreement, Contractor shall obtain and maintain in full force and effect during the term of this Agreement, including any extension thereof, the policies of insurance referenced.

5-4.2 General Liability Insurance.

[Add the following to this section]:

Contractor shall obtain and maintain, in full force and effect throughout the term of this Agreement, a policy of Commercial General Liability Insurance (Insurance Services Office form CG 00 01) written on an occurrence basis with limits of at least two million dollars ($2,000,000.00) per occurrence, four million dollars ($4,000,000.00) in the general aggregate, and four million dollars ($4,000,000.00) for completed operations aggregate. Defense costs shall be paid in addition to the limits. The policy shall contain no endorsements or provisions limiting coverage for (1) contractual liability; (2) cross liability exclusion for claims or suits by one insured against another; or (3) contain any other exclusion contrary to the Agreement.

[Replace the third paragraph with the following]:

	Limits of Liability
General Aggregate Limit	$4,000,000
Other than Products/Completed Operations Aggregate	$4,000,000
Products/Completed Operations Aggregate Limit.....	$4,000,000
Personal Injury Limit	$2,000,000
Each Occurrence.....	$2,000,000

5-4.3 Worker's Compensation Insurance. [Add the following to this section]:

Contractor shall obtain and maintain, in full force and effect throughout the term of this Agreement, a policy of Workers' Compensation Insurance in at least the minimum statutory amounts, and in compliance with all other statutory requirements, as required by the State of California. Contractor agrees to waive and obtain endorsements from its workers' compensation insurer waiving all subrogation rights under its workers' compensation insurance policy against the City, its officials, officers, employees, agents and volunteers, and to require each of its subcontractors, if any, to do likewise under their workers' compensation insurance policies. Contractor shall obtain and maintain, in full force and effect throughout the term of this Agreement, a policy of Employer's Liability Insurance written on a per occurrence basis with limits of at least one million dollars ($1,000,000.00) per accident for bodily injury or disease.

5-4.4 Auto Liability Insurance. [Replace this section with the following]:

Contractor shall obtain and maintain, in full force and effect throughout the term of this Agreement, a policy of Automobile Liability Insurance (Insurance Services Office form CA 001) written on a per occurrence basis with limits of at least one million dollars ($1,000,000.00) combined limit for each occurrence covering bodily injury and property damage. The policy shall specifically include coverage for "any auto" or for "all autos owned, non-owned, leased, and hired".

C. Workers' Compensation Insurance.

5-4.5 Insurance Endorsements. [Add the following section]:

Required insurance policies shall not be in compliance if they include any limiting provision or endorsement that has not been submitted to the City for written approval. Required insurance policies shall contain the following provisions, or Contractor shall provide endorsements on forms approved by the City to add the following provisions to the insurance policies:

A. The policy or policies of insurance required by this section for Commercial General Liability and Automobile Liability Insurance shall be endorsed to provide the following:

(1) Additional Insured: The City, its officials, officers, employees, agents and volunteers, shall be additional insureds with regard to liability and defense of suits or claims arising out of the performance of the Agreement; and

(2) Additional Insured Endorsements: Additional insured endorsements shall not (1) be restricted to "ongoing operations", (2) exclude "contractual liability", (3) restrict coverage to "sole" liability of Contractor, or (4) contain any other exclusions contrary to the Agreement; and, the coverage shall contain no special limitations on the scope of protection afforded to additional insureds.

(3) Notice: The policy or policies of insurance required by this section for Commercial General Liability and Automobile Liability Insurance shall be endorsed to state that coverage shall not be suspended, voided, cancelled, or modified, or reduced in coverage or in limits, except after thirty (30) days prior written notice by First Class U.S. Mail, postage-prepaid, has been provided to the City. Notwithstanding the foregoing, if coverage is to be suspended, voided, or cancelled because of Contractor's failure to pay the insurance premium, the notice provided to City shall be by ten (10) days prior written notice.

B. For all policies of Commercial General Liability Insurance, Contractor shall provide endorsements for completed operations to effectuate this requirement.

5-4.6 Deductibles and Self-Insured Retentions. [Add the following section]:

Any deductible or self-insured retention must be approved in writing by the City in advance and shall protect the City, its officials, officers, employees, agents and volunteers, in the same manner and to the same extent as they would have been protected had the policy or policies not contained a deductible or self-insured retention.

5-4.7 Primary and Non-Contributing Insurance. [Add the following section]:

All policies of General Liability Insurance and Auto Liability Insurance shall be primary and any other insurance, deductible, or self-insurance maintained by the City, its officials, officers, employees, agents or volunteers, shall not contribute with this primary insurance. Policies shall contain or be endorsed to contain such provisions.

5-4.8 Waiver of Subrogation. [Add the following section]:

All policies of Commercial General Liability and Automobile Liability Insurance shall contain or be endorsed to waive subrogation against the City, its officials, officers, employees, agents and volunteers, or shall specifically allow Contractor or others providing insurance evidence in compliance with the requirements set forth in this section to waive their right to recovery prior to a loss. Contractor hereby agrees to waive its own right of recovery against the City, its officials, officers, employees, agents and volunteers, and Contractor hereby agrees to require similar written express waivers and insurance clauses from each of its subcontractors.

5-4.9 Evidence of Coverage. [Add the following section]:

Concurrently with the execution of the Agreement, Contractor shall deliver certificates of insurance together with original endorsements affecting each of the insurance policies required by this Section. Required insurance policies shall not be in compliance if they include any limiting provision or endorsement that has not been submitted to the City for written approval. The certificates of insurance and original endorsements for each insurance policy shall be signed by a person authorized by that insurer to bind coverage on its behalf. At least fifteen (15) days prior to the expiration of any such policy, evidence of insurance showing that such insurance coverage has been renewed or extended shall be filed with the City. If such coverage is cancelled or reduced and not replaced immediately so as to avoid a lapse in the required coverage, Contractor shall, within ten (10) days after receipt of written notice of such cancellation or reduction of coverage, file with the City evidence of insurance showing that the required insurance has been reinstated or has been provided through another insurance company or companies. Contractor shall promptly furnish, at City's request, copies of actual policies including all declaration pages, endorsements, exclusions and any other policy documents City requires to verify coverage.

5-4.10 Requirements Not Limiting. [Add the following section]:

Requirement of specific coverage or minimum limits contained in this section are not intended as a limitation on coverage, limits, or other requirements, or a waiver of any coverage normally provided by any insurance. Nothing in this section shall be construed as limiting in any way the

indemnification provision contained in this Agreement, or the extent to which Contractor may be held responsible for payments of damages to persons or property.

5-4.11 Enforcement of Agreement (Non-Estoppel).

Contractor acknowledges and agrees that actual or alleged failure on the part of the City to inform Contractor of any non-compliance with any of the insurance requirements set forth in this section imposes no additional obligation on the City nor does it waive any rights hereunder.

5-4.12 Insurance for Subcontractors. [Add the following section]:

Contractor shall either: (1) include all subcontractors engaged in any work or services for Contractor relating to this Agreement as additional named insureds under the Contractor's insurance policies; or (2) Contractor shall be responsible for causing its subcontractors to procure and maintain the appropriate insurance in compliance with the terms of the insurance requirements set forth in this section, including adding the City, its officials, officers, employees, agents and volunteers, as additional insureds to their respective policies. All policies of Commercial General Liability Insurance provided by Contractor's subcontractors performing any work or services related to this Agreement shall be endorsed to name the City, its officials, officers, employees, agents and volunteers, as additional insureds. Contractor shall not allow any subcontractor to commence any work or services relating to this Agreement unless and until it has provided evidence satisfactory to City that the subcontractor has secured all insurance required under this section.

5-4.13 Other Insurance Requirements. [Add the following section]:

The following terms and conditions shall apply to the insurance policies required of Contractor pursuant to this Agreement:

A. Contractor shall provide immediate written notice to City if (1) any of the insurance policies required herein are terminated, cancelled or suspended, (2) the limits of any of the insurance coverages required herein are reduced, or (3) the deductible or self-insured retention is increased.

B. All insurance coverage and limits provided by Contractor and available or applicable to this Agreement are intended to apply to each insured, including additional insureds, against whom a claim is made or suit is brought to the full extent of the policies. Nothing contained in this Agreement or any other agreement relating to the City or its operations shall limit the application of such insurance coverage.

C. None of the insurance coverages required herein will be in compliance with the requirements of this section if they include any limiting endorsement which substantially impairs the coverages set forth herein (e.g., elimination of contractual liability or reduction of discovery period), unless the endorsement has first been submitted to the City and approved in writing.

D. Certificates of insurance will not be accepted in lieu of required endorsements, and submittal of certificates without required endorsements may delay commencement of the Project. It is Contractor's obligation to ensure timely compliance with all insurance submittal requirements as provided herein.

E. Contractor agrees to ensure that subcontractors, if any, and any other parties involved with the Project who are brought onto or involved in the Project by Contractor, provide the same minimum insurance coverage required of Contractor. Contractor agrees to monitor and review all such coverage and assumes all responsibility for ensuring that such coverage is provided in conformity with the requirements of this section. Contractor agrees that upon request, all agreements with subcontractors and others engaged in the Project will be submitted to the City for review.

F. Contractor agrees to provide immediate written notice to City of any claim, demand or loss against Contractor arising out of the work or services performed under this Agreement and for any other claim, demand or loss which may reduce the insurance available to pay claims, demands or losses arising out of this Agreement.

5-4.14 Contractor's Liability; City Not Liable; Claims Resolution [Add the following section]:

A. Contractor's liability. The Contractor shall be responsible for any loss or damage that may occur to:

- The work or any part thereof;
- Any of the materials or other things used or employed in performing the work;
- Any injury to any person or persons, either workers or the public;
- Any damage to property resulting from any cause which might have been prevented by the Contractor, including defects or obstructions at any time before completion of the work and its final acceptance.

B. City-ordered precautions. If, in the opinion of the City Engineer, the precautions taken by Contractor are not safe or adequate at any time during the term of the Contract, the City Engineer may order the Contractor to take further precautions, and if the Contactor shall fail to do so, the City Engineer may order the work done by others and charge the Contractor for the cost thereof, such cost to be deducted from any moneys due or becoming due the Contractor. Failure of the City Engineer to order such additional precautions, however, shall not relieve the Contractor from his full responsibility for public safety.

C. City not liable. The City shall not be answerable or accountable in any manner, for any loss or damage that may occur to any of the following from any cause which might have been prevented by the Contractor:

- The work or any part thereof;
- Any of the materials or other things used or employed in performing the work;
- Any injury to any person or persons, either workers or the public;
- Any damage to property.

D. Claims Resolution. From time to time during the period of this Contract, the City and/or the Contractor may be served with third-party claims, as a result of alleged conduct by Contractor. The following procedures shall be followed by City and Contractor:

For claims received by Contractor:

(1) Contractor shall provide City on a monthly basis details regarding any claim for damages to persons or property, including, date claim made, date of alleged damages,

type of damages, alleged cause of damages and, as claims are resolved, details regarding Contractor's denial or payment of such claim and the reasons for denial or payment.

(2) Contractor shall resolve or deny any claim received within thirty (30) days of receipt. If Contractor is unable to resolve a claim within the thirty (30) days set forth above, it shall, prior to the expiration of the thirty (30) days request and extension in writing from the City.

For claims received by City:

(1) City shall process any claims received pursuant to Chapter 1.04 (Claims and Demands) of the Rancho Santa Margarita Municipal Code.

(2) If after investigation of the claim, the City determines the Contractor is liable under this Contract, City shall tender the claim to the Contractor for proper handling and resolution.

E. Retention of Claimed Damages by City. The City may retain so much of the money due the Contractor under and by virtue of the Contract as shall be considered necessary by the City until disposition has been made of such suits or claims for damages aforesaid.

5-7 SAFETY.

5-7.1 Work Site Safety.

5-7.1.1 General. [Add the following section]:

In an emergency affecting the safety of life or property, including adjoining property, the Contractor, without special instructions or authorizations, is authorized to act at his discretion to prevent such threatened loss or injury, and he shall so act as though instructed to do so by the City.

5-7.1.3 Traffic and Access. [Add the following section]:

When entering or leaving roadways carrying public traffic, the Contractor's equipment, whether empty or loaded, shall in all cases yield to public traffic.

The Contractor shall notify in writing all affected property owners of the proposed construction schedule a minimum of forty-eight (48) hours, but not more than seventy-two (72) hours, in advance of any limitation or closure of access to their property. Form of said notice shall be as approved by the Engineer and shall contain the date and time of the closure. In the event of delay, whether beyond the control of the Contractor or not, the Contractor shall notify all affected property owners as to the extent of the delay and his revised schedule. In the event of delay over 72 hours, the Contractor shall re-notify the property owners as described above. Payment for notification and coordination as per Section 600 of the Standard specifications as modified herein shall be included in the compensation paid for the various items of work and no additional compensation will be allowed. The "Notices" will be furnished by the Contractor.

Pedestrian access shall be maintained at all times during construction and shall be in accordance with the Americans with Disabilities Act.

5.7.2 Safety Orders.

5.7.2.1 General. [Add the following to this section]:

The Contractor shall comply with the provisions of any City ordinances or regulations regarding requirements for the protection of excavations and the nature of such protection.

In accordance with Section 6500 of the Labor Code, the Contractor is required to obtain a permit from the Division of Industrial Safety for any trench or excavation which is five feet or more in depth and into which a person is required to descent.

In accordance with Section 6705 of the Labor Code, prior to any excavation involving an expenditure in excess of twenty-five thousand dollars ($25,000) for the excavation of any trench or trenches five (5) feet or more in depth, Contractor shall submit to Engineer a written detailed plan showing the design of shoring, bracing, sloping, or other provisions to be made for worker protection from the hazard of caving ground during the excavation of such trench or trenches.

Prior to beginning excavations requiring shoring, the Contractor shall designate in writing to the Engineer someone whose responsibility it is to supervise the Project safety measures and someone whose responsibility it is to supervise the installation and removal of sheeting, shoring and bracing.

In addition to shoring the excavations in accordance with the minimum requirements of Industrial Safety Orders, it shall be the Contractor's responsibility to provide any and all additional shoring required to support the sides of the excavation against the effects of load which may exceed those desired by using the criteria set forth in the Industrial Safety Orders. The Contractor shall be solely responsible for any damages which may result from his failure to provide adequate shoring of the excavation under any and all of the conditions of loading which may exist or which may arise during construction of the Project.

In accordance with Section 7104 of the Public Contract Code, any public works contract which involves excavations that extend deeper than four (4) feet below the surface shall provide as follows:

I. That the Contractor shall promptly, and before the following conditions are disturbed, notify the City, in writing, of any:

   A. Material that the Contractor believes may be material that is hazardous waste, as defined in Section 25117 of the Health and Safety Code, which is required to be removed to a Class I, Class II, or Class III disposal site in accordance with provisions of existing law.

   B. Subsurface or latent physical conditions at the site differing from those indicated by information about the site made available to bidders prior to the deadline for submitting bids.

   C. Unknown physical conditions at the site of any unusual nature, different materially from those ordinarily encountered and generally as inherent in work of the character provided for in the Contract.

II. The City will promptly investigate the conditions, and if it finds that the conditions do materially so differ, or do involve hazardous waste, and cause a decrease or increase in the Contractor's cost of, or the time required for, performance of any part of the work, the City shall issue a change order under the procedures described in the Contract.

III. That, in the event that a dispute arises between City and the Contractor whether the conditions materially differ, or involve hazardous waste, or cause a decrease or increase in the Contractor's cost of, or time required for, performance of any part of the work, the Contractor shall not be excused from any scheduled completion date provided for by the Contract, but shall proceed with all work to be performed under the Contract. The Contractor shall retain any and all rights provided either by Contract or by law which pertain to the resolution of disputes and protests between the contracting parties.

5-7.9 Street Closures, Detours, Barricades. [Add the following section]:

The Contractor shall perform lane closures and all traffic control operations in accordance with the applicable details in the California MUTCD, latest edition. No work shall be performed until the required lane closure traffic control has been installed and approved by the City. If the City does not feel that the Contractor is properly and safely implementing the MUTCD details, then work shall be stopped until such time as the Contractor can successfully remedy the deficiencies.

Portable delineators (traffic cones are not allowed), which conform to the California MUTCD, latest edition, shall be spaced as necessary for proper delineation of the travel way. The spacing between delineators shall not exceed 25 feet. The minimum lane transitions shall be a 50 to 1 taper. Double base delineators will be required.

The Contractor shall schedule the order of work such that no travel lanes are closed before 9:00 A.M. or after 3:30 P.M. daily. A minimum of one through travel lane in each direction and one turning lane in each direction shall be maintained at all times during construction, unless otherwise approved by City in writing. The same number of travel lanes currently in use shall be opened to traffic during non-working hours. No street closures shall be made unless indicated on the approved traffic control plans. The traffic signal and traffic signal detectors shall remain operational continuously during the construction, and traffic loops that require replacement shall be disrupted no more than 5 calendar days before their replacement. **No weekend work (day or night) will be allowed, unless otherwise specified on the Plans or as approved by the City.**

The Contractor shall provide, at his expense, advanced warning signs advising the public of the impending major construction project and his proposed schedule. Said signs shall be posted at all major approaches to the construction zones a minimum of one week prior to the start of construction.

The Contractor shall designate at least one worker solely for the provision and maintenance of traffic control.

The Contractor shall be responsible for providing temporary access to all intersecting streets and driveways throughout the workday and at the end of each workday. A minimum of one access point shall be maintained for each commercial business during their normal business hours. **Pedestrian access shall be maintained at all times and temporary and permanent pedestrian access shall be in accordance with the Americans with Disabilities Act.**

The Contractor shall provide and maintain all other signs, barricades, pedestals, flashers, delineators and other necessary facilities for the protection of the public within the limits of the construction area and shall be maintained in a new or like new condition, free of damage and graffiti.

If the traffic delineators are damaged, displaced or not in an upright position, from any cause, said delineators shall immediately be replaced or restored to their original location, in an upright position, by the Contractor.

The Contractor shall furnish competent flagmen to give adequate warning to traffic or to the public of any dangerous conditions to be encountered. Flagmen, while on duty and assigned to give warnings to the public that the highway is under construction and of any dangerous conditions to be encountered as a result thereof, shall perform their duties and shall be provided with the necessary equipment in accordance with the California MUTCD. The equipment shall be furnished and kept clean and in good repair by the Contractor, at Contractor's expense.

Should the Contractor appear to be neglectful or negligent in furnishing warning and protective measures as provided, the Engineer may direct attention to the existence of a hazard and the necessary warning and protective measures shall be furnished and installed by the Contractor at its own expense. Should the Engineer point out the inadequacy of warning and protective measures, such action on the part of the Engineer shall not relieve the Contractor from responsibility for public safety or abrogate his obligation to furnish and pay for these devices.

Where on-street parking is not allowed, the Contractor shall be required to post "Temporary No Parking" signs 48 hours prior to start of work. The Contractor will furnish the notification to property owners as mentioned in Section 600 of the Standard Specifications and the "Temporary No Parking" signs.

Contractor shall notify the following entities at least forty-eight (48) hours in advance of any street closure or restriction to access.

1. Fire Department: Orange County Fire Authority, (714) 573-6000
2. Police Department: Orange County Sheriff's Department, (714) 647-7000
3. School Districts: Saddleback Valley Unified: (949) 586-1234, Capistrano Unified: (949) 489-7000
4. Trash Collection: CR&R, (877) 728-0446
5. Street Sweeping: Sunset Property Services, (949) 551-5151
6. Transit Operations: Orange County Transportation Authority (OCTA), (714) 560-6282
7. Fire Department: Station 18, (949) 858-9369
8. Mail Service: US Postal Service

The City Engineer may add additional entities to this list at his discretion.

All existing stop signs, street name signs and regulatory signs shall be maintained in visible locations during construction. Where construction detours and signing conflict with existing signing, the Contractor shall cover existing signs in a manner approved by the City. The Contractor shall also provide temporary traffic restriping, or reflective white or yellow plastic tabs, at the conclusion of each working day, if not sooner, as directed by the City, for any centerline, painted median or lane line that is obliterated by construction.

The Contractor shall also be responsible for notifying adjacent businesses, residents (of affected residential tracts), and entities listed above, in writing seven (7) days in advance of any work that involves limited access. Said notice shall be reviewed and approved by the City in advance of its circulation. Contractor shall provide verification to the City that proper circulation of the notice has been accomplished.

The Contractor shall maintain a 24-hour emergency service to remove, install, relocate, and maintain warning devices. No later than ten (10) days after the award of the Contract, the Contractor shall furnish to the City, names, and telephone numbers of three persons responsible for this emergency service. In the event these persons do not promptly respond when notified, or it becomes necessary to call other forces to accomplish emergency service, the Contractor will be responsible for any cost incurred.

Prior to the start of each work day, the Contractor shall perform all necessary work incidental to and commensurate with the proper signing, detouring, barricading, etc., heretofore and hereinafter specified that is required for that particular day's schedule of operations. No construction shall be permitted until such signing and detouring operations have been completed and approved by the City.

Personal vehicles of the Contractor's employees shall only be parked in an allowed area as delineated by the City, and shall not be parked on the traveled way at any time, including any section closed to public traffic.

Flashing Arrow Signs:

Each flashing arrow sign shall be solar powered, mounted on a truck or on a trailer and shall be capable of operating while the vehicle is moving or as directed by the City.

Signs mounted on the cab of a truck shall be mounted to provide a minimum of seven (7) feet between the bottom of the sign and the roadway. Signs mounted on a trailer, or on anything other than the cab of a truck, shall be mounted to provide a minimum of eight (8) feet between the bottom of the sign and the roadway.

The total weight of trailer mounted flashing arrow sign including the trailer, sign, power source and other components shall not exceed 1,500 pounds and the height of the level trailer bed shall be no higher than 21 inches above the roadway. The trailer shall be equipped with a minimum of 3 leveling jacks.

Alternative types of lamps may be used in flashing arrow signs if visibility is equal to the specified lamps. Each type AX flashing arrow sign shall be a minimum of two (2) feet high and four (4) feet wide, and shall be finished with flat black enamel. A minimum of 13 No.4414AX 12-volt, yellow or amber lamps shall be installed in the panel. The lamp configuration shall be for three (3) arrowheads or an arrow shaft with two (2) arrowheads, one pointing in each direction on the face of the sign with a minimum of five (5) lamps forming each arrowhead. Each lamp shall be provided with a visor.

The lamp shall be activated by a switch on a control panel and shall be controlled by electronic circuitry to provide a minimum of four (4) selectable modes of operation as follows:

1. Pass Left Mode, - Sequencing of lighted arrowheads or sequencing the lamps forming the arrow shaft and arrowhead to the left or a flashing left arrow with the lamps in the arrow shaft and arrowhead flashing on and off simultaneously.

2. Pass Right Mode, - Sequencing of lighted arrowheads or sequencing the lamps forming the arrow shaft and arrowhead to the right or a flashing right arrow with the lamps in the arrow shaft and arrowhead flashing on and off simultaneously.

3. Simultaneous Mode, - Either the outside arrowheads pointing in opposite directions are continuously illuminated, except for the center lamp forming each arrowhead, while the arrow shaft lamps flash on and off simultaneously or the outside arrowhead pointing in opposite directions and the arrow shaft lamps all flash simultaneously to indicate passing on either side.

4. Travel Mode, - Travel or caution mode shall flash in a manner not resembling any other mode.

Lane Requirements:

The Contractor shall be required to use flashing arrow signs at all lane closures to direct travel and appropriate detour signing to control traffic through and/or around the construction area.

The Contractor shall also ensure that access to all side streets and driveways are maintained at all times. Work in front of or within driveways and side streets shall be conducted in a manner where at no time is access to property denied.

SECTION 6 - PROSECUTION AND PROGRESS OF THE WORK

6-1 CONSTRUCTION SCHEDULE AND COMMENCEMENT OF WORK.

6-1.0 General. [Add the following section]:

The Contractor's proposed Construction Schedule shall be submitted to the Engineer within ten (10) working days after the date of the Notice of Award of Contract. The schedule shall establish the order of work which minimizes disruption of existing travel lanes and maximizes public convenience.

Prior to issuing the Notice to Proceed, the Engineer will schedule a preconstruction meeting with the Contractor to review the proposed Construction Schedule, arrange the utility coordination, discuss construction methods, and clarify inspection procedures.

The Contractor shall submit periodic Progress Reports to the Engineer by the tenth (10th) day of each month. The report shall include an updated Construction Schedule. Any deviations from the original schedule shall be explained. Liquidated damages will be assessed as set forth in Section 6-9.1 below.

6-1.3 Construction Schedule (Critical Path Method) [Add the following section]:

The Contractor shall submit to the Engineer practicable critical path method (CPM) progress schedules in conformance with these Special Provisions. Whenever the term “schedule” is used in this section it shall mean CPM progress schedule illustrated by the Gantt Bar method. The schedule shall be prepared by qualified and experienced scheduling staff.

Schedules shall show the order in which the Contractor proposes to carry out the work with logical links between time-scaled work activities, and calculations made using the critical path method to determine the controlling operation or operations. The Contractor is responsible for assuring that all activity sequences are logical and that each schedule shows a coordinated plan for complete performance of the work.

The Contractor shall produce schedules using computer software and shall furnish compatible software for the Engineer's exclusive possession and use. The Contractor shall furnish network diagrams, narrative reports, tabular reports and schedule data as parts of each schedule submittal.

The number of activities shall be sufficient to assure adequate planning of the Project, to permit monitoring and evaluation of progress, and to do an analysis of time impacts.

Schedule activities shall include the following:

A. A clear legible description.
B. Start and finish dates.
C. A duration of not less than one (1) working day, except for event activities, and not more than twenty (20) working days, unless otherwise authorized by the Engineer.
D. At least one predecessor and one successor activity, except for Project start and finish milestones.
E. Required constraints.
F. Codes for responsibility, stage, work shifts, location and Contract pay item numbers.

The Contractor may show a scheduled completion date that is later than the Contract completion date on an update schedule, after the baseline schedule is accepted. The Contractor shall provide an explanation for a late scheduled completion date in the narrative report that is included with the schedule.

The Engineer's review and acceptance of schedules shall not waive any Contract requirements and shall not relieve the Contractor of any obligation thereunder or responsibility for submitting complete and accurate information. Schedules that are rejected shall be corrected by the Contractor and resubmitted to the Engineer within five (5) working days of notification by the Engineer, at which time a new review period of one (1) week will begin.

Errors or omissions on schedules shall not relieve the Contractor from finishing all work within the time limit specified for completion of the Contract. If, after, a schedule has been accepted by the Engineer, either the Contractor or the Engineer discovers that any aspect of the schedule has an error or omission, it shall be corrected by the Contractor on the next schedule.

The contractor is required to submit a 3-week lookahead schedule on a weekly basis every Wednesday.

Payment for the Project schedule and revisions/updates to the schedule shall be made under other items of work and no additional payment shall be made therefore.

6-1.4 Acceleration. [Add the following section]:

The City reserves the right to accelerate the work of the Contract at any time during its performance. In the event the City directs acceleration, such directive will be given to the Contractor in writing. The Contractor shall keep cost and other Project records related to the acceleration directive separately from the normal Project cost records and shall provide a written record of acceleration costs to the City on a daily basis.

In the event the Contractor believes that some action or inaction on the part of the City constitutes an acceleration directive, the Contractor shall immediately notify the City in writing that the Contractor considers the actions or inactions an acceleration directive. The Contractor shall not accelerate their work efforts until the City responds to the written notification. If acceleration is then directed or required by the City, all cost records referred to in the previous paragraph shall be maintained by the Contractor and provided to the City on a daily basis.

In order to recover additional costs due to acceleration, the Contractor must document that additional expenses were incurred and paid by the Contractor. Labor costs recoverable will only be overtime or shift premium costs or the cost of additional laborers brought to the site to accomplish the accelerated work effort. Equipment costs recoverable will only be the cost of added equipment mobilized to the site to accomplish the accelerated work effort.

6-3 TIME OF COMPLETION.

6-3.1 General. [Add the following to this section]:

The time for completion shall be as set forth in the General Specifications.

6-3.3 Completion, Acceptance, and Warranty. [Add the following section]:

Work will be deemed completed on the same date when the Notice of Completion is recorded with the County of Orange.

6-6 SUSPENSION OF THE WORK.

6-6.1 General. [Add the following to this section]:

The suspension of the work from any cause whatever shall not relieve the Contractor of his responsibility for the work and materials as herein specified.

6-9 LIQUIDATED DAMAGES. [Add the following to this section]:

It is agreed by the parties to the Contract that time is of the essence and that in the case that all the work is not complete before or upon the expiration of the time limit set forth, damage will be sustained by the City. For each consecutive calendar day in excess of the time specified for the completion of the work, the Contractor shall pay to the City [$1,000 / AMOUNT]. The expenses and damages described above shall be deducted from any money due the Contractor under this contract. The Contractor and his sureties shall be liable for any excess cost.

6-9.1 Additional Liquidated Damages. [Add the following section]:

Additional liquidated damages shall be assessed in the amount of $500.00 per hour that the Contractor reduces the traveled way width beyond the hours specified or works in the through or turning lanes in violation of these Specifications as solely determined by City unless otherwise approved in writing by the City.

Additional liquidated damages will also be assessed in the amount of $500.00 per calendar day for failure to follow the City reviewed and approved construction schedule or timely submit periodic progress reports as described in Section 6-1 of these Special Provisions.

Additional liquidated damages will also be assessed in the amount of $500.00 per calendar day for failure to mobilize to the Project site within 10 working days of the date of the Notice of Proceed as specified in these Special Provisions.

Additional liquidated damages shall be assessed in the amount of $1,000.00 per day for failure to complete any work parts within specified times. The City may deduct specified damages from payments for each day needed to complete a work part in excess of the time specified for completing the work part. Damages accrue starting the first day after a work part exceeds the specified time through the day the specified work part is complete.

Additional liquidated damages shall be assessed in the amount of $500.00 per day for failure to comply with, or implement, or maintain the Storm Water Pollution Protection Plan (SWPPP) or Water Pollution Control Plan (WPCP), as required and in accordance with the City's NPDES permit with the San Diego Regional Water Quality Board.

Additional liquidated damages shall be assessed in the amount of $500.00 per incident that the Contractor fails to install the Best Management Practices (BMP's) within 24 hours of notification.

SECTION 7 - MEASUREMENT AND PAYMENT

7-3 PAYMENT.

7-3.2 Partial and Final Payment. [Add the following to this section]:

The closure date for periodic progress payments will be last day of each month. The final progress payment will not be released until the Contractor returns the control set of Plans and Specifications showing the as-constructed conditions (as-builts). The City shall withhold from the final payment $15,000 in the event that the Contractor fails to return the control set of Plans and Specifications showing the as-constructed conditions.

The full five percent (5%) retention will be deducted from all payments. The City shall hold retainage from the Contractor and may make prompt and regular incremental acceptances of portions, as determined by the City, of the Contract work, and pay retainage to the Contractor based on these acceptances. The Contractor, or subcontractor, shall return all monies withheld in retention from a subcontractor within thirty (30) days after receiving payment for work satisfactorily completed and accepted including incremental acceptances of portions of the Contract work by the City. Any delay or postponement of payment over thirty (30) days may take place only for good cause and with the City's prior written approval. Any violation of this provision shall subject the violating Contractor or subcontractor to the penalties, sanctions and other

remedies specified in Section 7108.5 of the Business and Professions Code. These requirements shall not be construed to limit or impair any contractual, administrative, or judicial remedies otherwise available to the Contractor or subcontractor in the event of a dispute involving late payment or nonpayment by the Contractor, deficient subcontract performance, or noncompliance by a subcontractor.

The final retention will be authorized for payment thirty-five (35) days after the date of recordation of the Notice of Completion. The City may withhold from release of the final retention amounts authorized under Public Contracts Code Section 7107 and/or 125% of amounts identified in any Stop Notices received by the City.

7-3.3 Delivered Materials. [Replace this section with the following]:

Materials and equipment delivered but not incorporated into the work shall not be included in the estimate for progress payment.

7-3.4 Mobilization. [Add the following to this section]:

Mobilization shall consist of preparatory work and operations, including but not limited to those necessary for the movement of personnel, equipment, supplies, and incidentals to the Project site; for the establishment of all offices, buildings and other facilities necessary for the work on this Project; and for all other work and operations which must be performed or cost incurred prior to beginning work on the various Contract items on the Project site. Mobilization is deemed to include all aspects of mobilization and de-mobilization work occurring during the life of the Project for any reason.

Mobilization shall be paid based on the following payment schedule.

25% Upon First Payment
50% Upon 50% Earned Contract Value
25% Upon Final Payment

Full compensation for mobilization shall be included in the Contract **LUMP SUM** price bid for **Mobilization** and shall include full compensation for all costs incurred by the Contractor for doing all the work involved in mobilization as specified herein, and no additional compensation will be allowed. Mobilization shall not exceed five percent (5%) of the entire bid, excluding mobilization and as shown in the Proposal Bid Sheet.

SECTION 9 – FACILITIES FOR CONTRACT PERSONNEL. [Add the following section]:

9-1 EXTENDED FIELD OFFICE OVERHEAD COST.

Within fourteen (14) calendar days after receipt of the Notice to Proceed, the Contractor shall submit a written statement to the City detailing its field office overhead costs which are time related. The City will review this first cost submittal and reach a written agreement with the Contractor on a daily field office overhead cost rate which shall be memorialized in a no-cost change order. The daily rate agreed to in this change order will be applicable throughout the duration of the Contract. No field office costs will be paid until such an agreement is reached between the City and the Contractor and the change order concerning this daily rate is executed

by both parties. Progress payments may be withheld pending receipt of the above-referenced cost submittal and executed change order.

The individual cost components of the daily field office overhead rate shall represent costs which increase as a direct result of any time extension caused solely and exclusively by an act or omission of the City. This listing may include such cost items as on-site project management, supervision, engineering and clerical salaries; on-site utilities and rent; on-site company vehicles and their operating expenses; and site maintenance and security expenses. Field office overhead costs which are unaffected by increased time shall not be allowable cost in calculating the daily field office overhead rate. These non-time related costs include, but are not limited to, acquisition and installation of stationary equipment; temporary construction facilities; utilities and office furnishings (unless such items are rented or leased); the preparation of the site including clearing, grubbing, grading, fencing, mobilizations and demobilization costs; and the costs of permits, bonds and insurance coverage for the Project.

The individual wage cost components used to calculate the daily field office rate shall be supported by actual employee payroll records, not salary ranges or estimates. Hourly rates for management, supervisory, engineering, and clerical employees shall be based upon 2080 work hours per year and shall not include allowances for holidays, vacations, or sick time.

When applicable, the daily field office overhead rate shall be multiplied by the number of days the Contract is delayed or extended by change order and shall be added to the agreed upon change order cost. The days of delay shall be those caused solely by the acts or omissions of the City and documented by a time impact analysis prepared and submitted by the Contractor. In the event a deductive change order is issued which reduces time under the Contract, the daily field office overhead rate shall be used to calculate the deductive amount. No allowance for overhead costs and no profit allowance shall be added to the extended field office overhead cost.

PART 3 - CONSTRUCTION METHODS

3.01 SCOPE OF WORK. The work to be performed and completed by Contractor consists of mobilization, traffic control, best management practices, pole, cabinet, bike rack, and metal barrier preparation and painting, installation of decorative features, and other miscellaneous improvements, and all other incidental work in this specification document. The entire pole shall be painted including areas to be covered by the decorative bases. Pole schedule information is provided below from available records however it is the Contractor's sole responsibility to verify the accuracy of the information prior to submitting their bid proposal.

Vereda Laguna and Antonio Parkway

POLE SCHEDULE

	STANDARD				LUMINAIRE	FOUNDATION	
NO.	TYPE	HEIGHT	SIG.M.A.	LUM.M.A.		TYPE	SIZE
(1)	26-4-70	30'-0"	(45')	15'	200 W.H.P.S.V.	C	3'-6" X 8'-0"
(2)	(1A)	-	-	-	-	(S)	(2'-0"X3'-0")
(3)	17-2-70	30'-0"	(20')	15'	200 W.H.P.S.V.	C	2'-6" X 6'-0"
(4)	(1A)	-	-	-	-	(S)	(2'-0"X3'-0")
*(5)	SPECIAL	30'-0"	(50')	15'	200 W.H.P.S.V.	C	3'-6" X 10'-0"
(6)	(1A)	-	-	-	-	(S)	(2'-0"X3'-0")
(7)	17-2-70	30'-0"	(20')	15'	200 W.H.P.S.V.	C	2'-6" X 6'-0"
(8)	(1A)	-	-	-	-	(S)	(2'-0"X3'-0")

Avenida de las Flores and Camino Montana

POLE SCHEDULE

LOC	STANDARD		ARMS		LUMINAIRE	PED PUSH BT.			SIGNAL MOUNTING		R.S.N.S.	PLACEMENT	
	TYPE	HT.	SIG.	LUM.	H.P.S.V.	TYPE	PHASE	QUAD	VEHICLE	PED.	MESSAGE	A	B
(1)	• 19-4-129	■ 9.1m (30')	7.6m (25')	3.7m (12')	200 W	-	-	-	MAS, SV-1-T	SP-1-CS	El Camino Montana	5'	2.5'
(2)	• 1-A	3.0m (10')	-	-	-	B	6	S	TV-1-T	-	-	5'	2.5'
(3)	* 17-2-129	9.1m (30')	6.1m (20')	3.7m (12')	200 W	B	6	S	MAS, SV-1-T	SP-1-CS	De Las Flores	8'	2.5'
(4)	* 1-A	3.0m (10')	-	-	-	B	8	W	TV-2-T	SP-1-CS	-	5'	2.5'
(5)	19-4-129	▲ 9.1m (30')	6.1m (20')	3.7m (12')	200 W	B	8	W	MAS, SV-2-TB	SP-2-CS	El Camino Montana	PER PLAN	2.5'
(6)	• 17-2-129	3.0m (10')	6.1m (20')	3.7m (12')	200 W	-	-	-	MAS, SV-2-TB	SP-1-CS	De Las Flores	PER PLAN	2.5'

Avenida de las Flores and Buena Suerte

POLE SCHEDULE

LOC	STANDARD		ARMS		LUMINAIRE	PED PUSH BT.			SIGNAL MOUNTING		R.S.N.S.	PLACEMENT	
	TYPE	HT.	SIG.	LUM.	H.P.S.V.	TYPE	PHASE	QUAD	VEHICLE	PED.	MESSAGE	A	B
(1)	* 19-4-129	9.1m (30')	•6.1m (20')	3.7m (12')	200 W	-	-	-	MAS, SV-2-TB	-	Buena Suerte	PER PLAN	2.5'
(2)	17-2-129	9.1m (30')	6.1m (20')	3.7m (12')	200 W	B	8	W	MAS, SV-2-TB	SP-1-CS	■ De Las Flores	PER PLAN	2.5'
(3)	* 17-2-129	9.1m (30')	6.1m (20')	3.7m (12')	200 W	B	8	W	MAS, SV-1-T	SP-1-CS	Buena Suerte	4'	2.5'
(4)	* 1-A	2.1m (7')	-	-	-	B	2	N	-	SP-1-CS	-	4'	2.5'
(5)	* 15	9.1m (30')	-	3.7m (12')	200W	B	2	N	-	-	-	6'	2.5'
(6)	* 1-A	3.0m (10')	-	-	-	-	-	-	TV-2-T	SP-1-CS	-	5'	2.5'

Avenida de las Flores and Via Con Dios

POLE SCHEDULE

LOC	STANDARD		ARMS		LUMINAIRE	PED PUSH BT.			SIGNAL MOUNTING		R.S.N.S.	PLACEMENT	
	TYPE	HT.	SIG.	LUM.	H.P.S.V.	TYPE	PHASE	QUAD	VEHICLE	PED.	MESSAGE	A	B
(1)	(E) 19-2-70	9.1m (30')	12.2m (40')	(E) 3.7m (12')	(E) • 200 W	-	-	-	MAS, MAS, SV-1-T	SP-1-CS	■ Via Con Dios	(E)	(E)
(2)	(E) 1-A	3.0m (10')	-	-	-	B	6	E	TV-2-T	-	-	(E)	(E)
(3)	(E) 17-2-70	9.1m (30')	6.1m (20')	(E) 3.7m (12')	(E) • 200 W	B	6	E	MAS, SV-1-T	SP-1-CS	De Las Flores	(E)	(E)
(4)	(E) 1-A	3.0m (10')	-	-	-	B	8	S	TV-2-T	SP-1-CS	-	(E)	(E)
(5)	(E) 26-4-70	9.1m (30')	12.2m (40')	(E) 3.7m (12')	(E) • 200 W	-	-	-	MAS, MAS, SV-1-T	SP-1-CS	■ Via Serena	(E)	(E)
(6)	PED POST	1.0m (3'-10")	-	-	-	B	8	S	-	-	-	2.5'	15'
(7)	1-A	3.0m (10')	-	-	-	B	2	W	TV-1-T	SP-1-CS	-	2.5'	(E)
(8)	(E) 17-2-70	9.1m (30')	6.1m (20')	(E) 3.7m (12')	(E) • 200 W	B	2	W	MAS, SV-1-T	-	De Las Flores	(E)	(E)
(9)	1-A	3.0m (10')	-	-	-	-	-	-	TV-1-T	SP-1-CS	-	2.5'	(E)

Avenida de las Banderas and Esperanza

POLE SCHEDULE

No.	STANDARD TYPE	HEIGHT	SIG.M.A.	LUM.M.A.	LUMINAIRE HPSV	R.S.N.S. LEGEND	SIGNAL MOUNTING VEHICLE			PED	PED PUSH BTN PHASE	PED PUSH BTN ARROW	REMARKS
1	26-4-70 (E)	30'	45'	15' (E)	250 W (E)	Esperanza	MAS LT	MAS	SV-1-T	SP-1-CS	4	←	
2	1-A	10'	–	–	–	–	–	–	TV-2-T	SP-1-CS	6	→	USE EXIST. FOUNDATION
3	26-4-70 (E)	30'	40'	15' (E)	250 W (E)	Empresa	MAS LT	MAS	SV-1-T	SP-1-CS	6	←	
4	1-A	10'	–	–	–	–	–	–	TV-1-T	SP-1-CS	8	→	USE EXIST. FOUNDATION
5	26-4-70 (E)	30'	45'	15' (E)	250 W (E)	Arrow Vista	MAS LT	MAS	SV-1-T	SP-1-CS	8	←	
6	1-A	10'	–	–	–	–	–	–	TV-2-T	SP-1-CS	2	→	USE EXIST. FOUNDATION
7	19-4-70 (E)	30'	30'	12' (E)	250 W (E)	Empresa	MAS LT	MAS	SV-1-T	SP-1-CS	2	←	
8	1-A	10'	–	–	–	–	–	–	TV-2-T	SP-1-CS	4	→	USE EXIST. FOUNDATION

Avenida de las Banderas and Comercio

POLE SCHEDULE

LOC	STANDARD TYPE	HT.	ARMS SIG.	ARMS LUM.	LUMINAIRE H.P.S.V.	PED PUSH BT. TYPE	PHASE	QUAD	SIGNAL MOUNTING VEHICLE	PED.	R.S.N.S. MESSAGE	PLACEMENT A	PLACEMENT B
1	(E) 26-4-113	9.1m (30')	* 13.7m (45')	(E) 3.7m (12')	(E) • 200 W	B	4	N	MAS, MAS, SV-1-T	SP-1-CS	Comercio	(E)	(E)
2	* 1-A	3.0m (10')	–	–	–	B	6	E	TV-1-T	SP-1-CS	–	6.5'	2.5'
3	(E) 17-2-113	9.1m (30')	* 3.05m (20')	(E) 3.7m (12')	(E) • 200 W	B	6	E	MAS, SV-1-T	SP-1-CS	Banderas	(E)	(E)
4	(E) 1-A	3.0m (10')	–	–	–	B	8	S	TV-2-T	SP-1-CS	–	(E)	(E)
5	(E) 26-4-113	9.1m (30')	* 13.7m (45')	(E) 3.7m (12')	(E) • 200 W	B	8	S	MAS, MAS, SV-1-T	SP-1-CS	Comercio	(E)	(E)
6	* 1-A	3.0m (10')	–	–	–	B	2	W	TV-1-T	SP-1-CS	–	3.5'	2.5'
7	(E) 17-2-113	9.1m (30')	* 3.05m (20')	(E) 3.7m (12')	(E) • 200 W	B	2	W	MAS, SV-1-T	SP-1-CS	Banderas	(E)	(E)
8	(E) 1-A	3.0m (10')	–	–	–	B	4	N	TV-1-T	SP-1-CS	–	(E)	(E)

Avenida de las Banderas and Camino Altozano

POLE SCHEDULE

LOC	STANDARD TYPE	HT.	ARMS SIG.	ARMS LUM.	▲ LUMINAIRE H.P.S.V.	PED PUSH BT. TYPE	PHASE	QUAD	SIGNAL MOUNTING VEHICLE	PED.	# LED S.N.S. MESSAGE	PLACEMENT A	PLACEMENT B
1	/ (E) 26-4-70	30'	30'	(E) 15'	▲ 250 W	B	4	E	•MAS, •SV-1-T, •SV-1-T	SP-1-T	Altozano	(E)	(E)
2	* 1-A	10'	–	–	–	B	6	S	TV-1-T	SP-1-T	–	5'	3'
3	/ (E) 17-2-70	30'	20'	(E) 12'	▲ 200 W	B	6	S	MAS, SV-1-T	SP-1-T	Banderas	(E)	(E)
4	* 1-A	10'	–	–	–	B	8	W	•TV-2-T	SP-1-T	–	5'	3'
5	/ (E) 26-4-70	30'	30'	(E) 15'	▲ 250 W	B	8	W	•MAS, •SV-1-T	SP-1-T	Altozano	(E)	(E)
6	* 1-A	10'	–	–	–	B	2	N	+TV-1-T	SP-1-T	–	5'	3'
7	/ (E) 17-2-70	30'	20'	(E) 12'	▲ 200 W	B	2	N	+MAS, +SV-1-T	SP-1-T	Banderas	(E)	(E)
8	* 1-A	10'	–	–	–	B	4	E	• TV-1-T	SP-1-T	–	8'	3'

3.02 INSPECTION.

A. Examine surfaces scheduled to receive paint and finishes for conditions that will adversely affect execution, permanence or quality of work and which cannot be put into acceptable condition through preparatory work as included in Section 3.03 "Preparation of Surfaces". The Contractor shall notify the City in writing of any defects or conditions which will prevent a satisfactory installation.

B. Do not proceed with surface preparation or coating application until conditions are suitable.

C. Commencement of painting will be construed as acceptance of surfaces.

3.02 PREPARATION OF SURFACES

A. All surfaces to receive paint shall be clean, dry, smooth, and dust free before application of any materials. Prepare surfaces as follows:

1. PRIMED FERROUS METAL: Remove all foreign matter. Touch up abrasions with Galvaprep® Amchem Product or an approved equal.

2. UNPRIMED FERROUS METAL: Remove all rust, mill scale and foreign matter by wire brushing, scraping, sandblasting or solvent as required to provide a clean, smooth surface. Spot prime with Galvaprep® Amchem Product or an approved equal.

3. GALVANIZED METAL: Remove all foreign matter and clean entire surface with mineral spirits. Apply Galvaprep® Amchem Product, or an approved equal, the same day as pretreatment is applied.

4. PAINTED SURFACES: Remove all foreign matter, tape, illegal signs etc. Remove all flaking or delaminated paint with approved methods. If existing paint has completely flaked off, bare metal surfaces shall be prepared as specified in Section 3.02. Painted surfaces shall be prepared by mechanical wire brush or similar method to ensure adhesion of new finish.

   a. Surfaces that cannot be prepared or painted as specified shall be immediately brought to the attention of the Agency in writing.

   b. Starting of work without such notification will be considered acceptance by the Contractor of surfaces involved.

   c. The Contractor shall replace unsatisfactory work caused by improper or defective surfaces as directed by the Agency at no additional cost to the

5. BOLTS: Bolts used to secure bases shall have anti-seize applied as directed by the engineer prior to installation.

3.03 APPLICATION

A. Do not apply initial coating until moisture content of surface is within limitations recommended by the paint manufacturer.

B. Application:

1. Paint specified is intended to cover surfaces satisfactorily in a single coat when applied at proper consistency and in accordance with manufacturer's recommendations. In the event that a single coat does not adequately cover substrate, additional coats shall be applied at no cost to the City.

2. Apply paint with suitable brushes, rollers or spraying equipment.

3. Rate of application shall not exceed that is recommended by the paint manufacturer for surface involved.

C. Comply with recommendations of product manufacturer for drying time between succeeding coats.

D. Leave all parts of molding and ornaments clean and true to details with no undue amount of paint in corners and depressions.

E. Make edges of paint adjoining other material or color clean and sharp with no overlapping.

F. Repainted surfaces rejected by the inspector shall be made good at the expense of the Contractor. Small affected areas may be touched up; large effected areas or areas without sufficient dry film thickness of paint shall be repainted. Runs, sags or damaged paint shall be removed by scraper or by sanding prior to application of paint.

G. All materials shall be applied evenly with proper film thickness and free of runs, sags, skips and other defects.

H. Hardware, hardware accessories, plates, and similar items in place shall be protected prior to painting and protection removed upon completion of each space.

1. Wash exposed metal with solvent then prime and paint as scheduled.

2. Spray paint wherever practical. Do not paint over Underwriters' labels, fusible links or recessed screws.

3. Bolts used to secure bases are to be treated with anti-seize lubricants prior to installation as directed by the Engineer.

I. Exposed plumbing and mechanical items without a factory finish such as conduits, access panels and items of similar nature are to be painted to match adjacent pole.

3.04 CLEAN UP

A. OVERSPRAY OR SPILLAGE ONTO ADJACENT SIDEWALK, WALLS, STREET, PRIVATE OR PUBLIC PROPERTY, AND VEHICLES IS PROHIBITED. CONTRACTOR WILL BE RESPONSIBLE FOR ALL DAMAGES CAUSED BY OVERSPRAY OR SPILLAGE**.**

B. Upon completion of the work, the Contractor will remove all equipment, excess material and debris and leave the area in a neat and orderly condition.

3.05 PAINT FINISH SCHEDULE

Finish all surfaces in accordance with the following schedule. Catalog names and numbers refer to products as manufactured by the Ameron Performance Coatings Corporation.

A. All poles, signal heads, fixtures & appurtenances except face of backing plates shall be: Amershield™ Aliphatic Polyurethane Coating - **Gloss RAL-8014**

B. Face of backing plates - Amershield™ Aliphatic Polyurethane Coating - **Flat Black**

C. Back of Traffic Signs - **Gloss RAL-8014**

3.06 PROTECTION

A. Protect all newly repainted exterior surfaces from rain and snow, condensation, contamination, dust, salt spray and freezing temperatures until paint coatings are completely dry. Curing periods shall exceed the manufacturer's recommended minimum time requirements.

3.07 PAYMENT

Payment for **Prepare, Paint, & Install City Furnished Decorative Base, Model No. BCSTE 1827**, **Prepare, Paint, & Install City Furnished Decorative Base Model No. BCSTE 2542**, **Prepare, Paint, & Install City Furnished Decorative Base Model No. BCSTE 2436, Prepare, Paint, & Install City Furnished Decorative Base Model No. BCSTE 3142, Prepare, and Paint, & Install City Furnished Decorative Base Model No. BCSTE 1116,** shall be included in the Contract unit price per **Each** as indicated in the bid schedule. The unit price shall include full compensation for all surface preparation, priming, coating, painting, and installation including furnishing all labor, materials, tools, equipment and incidentals for completing all work involved as specified herein, and as shown on the Project plans.

Payment for **Prepare, Paint, & Install City Furnished Finial**, **Prepare, Paint, & Install City Furnished Scrolls**, and **Prepare & Install City Furnished LED Pendant**, shall be included in the Contract unit price per **Each** as indicated in the bid schedule. The unit price shall include full compensation for all surface preparation, priming, coating, painting, and installation including furnishing all labor, materials, tools, equipment and incidentals for completing all work involved as specified herein, and as shown on the Project plans.

Payment for **Prepare & Paint Traffic Signal Pole, Type 1 (No Mast Arm)**, **Prepare & Paint Traffic Signal & Lighting Pole (Including Mast Arm)**, and **Prepare & Paint Lighting Pole (Including Mast Arm)** shall be included in the Contract unit price per **Each** as indicated in the bid schedule. The unit price shall include full compensation for all surface preparation, priming, coating, and painting including furnishing all labor, materials, tools, equipment and incidentals for completing all work involved as specified herein, and as shown on the Project plans.

Payment for **Prepare & Paint Utility Cabinet** and **Prepare & Paint Push Button Pole** shall be included in the Contract unit price per **Each** as indicated in the bid schedule. The unit price shall include full compensation for all surface preparation, priming, coating, and painting including furnishing all labor, materials, tools, equipment and incidentals for completing all work involved as specified herein, and as shown on the Project plans.

Payment for **Install City-Provided Light Shields** shall be included in the Contract unit price per **Each** as indicated in the bid schedule. The unit price shall include the installation of light shields onto LED Pendant per manufacturer recommendations and full compensation for furnishing all labor, materials, tools, equipment and incidentals for completing all work involved as specified herein, and as shown on the Project plans.

PART 6 – TEMPORARY TRAFFIC CONTROL

SECTION 601 - TEMPORARY TRAFFIC CONTROL FOR CONSTRUCTION AND MAINTENANCE WORK ZONES10-5 TRAFFIC CONTROL PLAN (TCP).

601-2 TEMPORARY TRAFFIC CONTROL PLAN (TCP).

601-2.1 General. [Add the following to this section]:

It shall be the Contractor's responsibility to furnish a detailed traffic control plan (TCP) prepared and stamped/signed by a licensed civil or traffic engineer licensed in the State of California for City approval. Detours shall be in accordance with Caltrans standards unless otherwise approved by the City. The Contractor shall submit detailed drawings showing, but not limited to, proposed detour(s)/lane closures to the Engineer for approval prior to the commencement of work. **The TCP shall be submitted to the City for review and approval within ten (10) working days after the date of the Notice of Award.**

601-2.2 Payment. [Replace this section with the following]:

The Contract **Lump Sum** price bid for the **Prepare and Implement Traffic Control Plan** bid item shall include full compensation for preparing the TCP, furnishing all labor, materials, tools, equipment and incidentals and for doing all the traffic control related work involving placing, removing, storing, maintaining, moving to new locations, replacing and disposing of the components of traffic control system as specified in the Standard Specifications and these Specifications and as directed by the City. The lump sum price shall also include steel plates and temporary AC including installation and removal; all associated temporary signing and striping; flashing arrow signs; flagging and/or flagmen costs; night work; Project notifications; and changeable message signs at the Project site, and no additional compensation will be made therefore.

Appendix A – Water Pollution Control Plan Template

WATER POLLUTION CONTROL PROGRAM (WPCP)

for

START HERE…CLICK HERE TO INSERT PROJECT NAME-THEN TAB TO NEXT FIELD

RSM Contract Number:

INSERT RSM CONTRACT NUMBER-THEN TAB TO NEXT FIELD.

Prepared for:

Insert Name of Lead Agency-then TAB.
Insert Address 1 and press ENTER to insert Address 2 or TAB to next field.
Insert City, State, ZIP-then TAB.
Insert Resident Engineer's Name-then TAB.
Insert Resident Engineer's Telephone Number-then TAB.

Submitted by:

Insert Contractor's Company Name-then TAB.
Insert Address 1 and press ENTER for Address 2 or TAB to next field.-then TAB.
Insert City, State, ZIP-then TAB.
Insert Telephone-then TAB.
Insert Owner/Representative's Name-then TAB.

Project Site Address

Insert job site address, if any-then TAB.
Insert job site telephone number, if any-then TAB.

Contractor's Water Pollution Control Manager

Insert WPCM's Name-then TAB.
Insert Telephone Number(s)-then TAB.

Contractor's Designated Water Pollution Control Inspector (if different from WPCM)

Insert Inspectors Name-then TAB.
Insert Telephone Number(s)-then TAB.

WPCP Prepared by:

Insert Company Name-then TAB.
Insert Address 1 and press ENTER to insert Address 2 or TAB to next field.
Insert City, State, ZIP-then TAB.
Insert Telephone-then TAB.
Insert Name and Title of Preparer-then TAB.

WPCP Preparation Date

Insert Date

Contents

Section 10 WPCP Certification and Approval 10-1
10.1 Contractor's Certification and Approval by the Resident Engineer 10-1
Section 20 Project Information 20-1
Section 30 Pollution Sources and Control Measures 30-1
30.1 Soil Stabilization (Erosion Control) and Sediment Control 30-1
30.1.1 Soil Stabilization BMPs 30-2
30.1.2 Sediment Control BMPs 30-6
30.1.3 Tracking Control BMPs 30-8
30.1.4 Wind Erosion Control BMPs 30-10
30.2 Construction Site Management 30-12
30.2.1 Non-Stormwater Management BMPs 30-12
30.2.2 Waste Management and Materials Pollution Control BMPs 30-15
30.3 Water Pollution Control Drawings (WPCDs) 30-17
30.4 Construction BMP Maintenance, Inspection, and Repair 30-17
30.5 Training 30-18
Section 40 Amendments 40-1
Section 50 Reporting 50-1
50.1 Discharge Reporting 50-1

WPCP Attachments

Attachment A ..... Water Pollution Control Drawings
Attachment B ..... Maintenance, Inspection, and Repair of Construction Site BMPs
Attachment C ..... Stormwater Quality Construction Site Inspection Checklist
Attachment D ..... Amendments
Attachment E ..... Notice of Discharge
Attachment F ..... Discharge Reporting Log
Attachment G ..... Trained Contractor Personnel Log
INSERT ADDTIONAL ATTACHMENT REFERENCES OR DELETE THIS LINE

Section 10
WPCP Certification and Approval

10.1 Contractor's Certification and Approval by the Resident Engineer

INSTRUCTIONS

- The contractor, authorized and required by the Special Provisions to prepare and implement the WPCP, shall provide and sign the following certification:

REQUIRED TEXT

CONTRACTOR'S CERTIFICATION OF WPCP

"I certify under a penalty of law that this document and all attachments were prepared under my direction or supervision in accordance with a system designed to ensure that qualified personnel properly gather and evaluate the information submitted. Based on my inquiry of the person or persons who manage the system, or those persons directly responsible for gathering the information, the information submitted, to the best of my knowledge and belief is true, accurate, and complete. I am aware that there are significant penalties for submitting false information, including the possibility of fine and imprisonment for knowing violations."

Signature	Date
Name and Title	Telephone Number

INSTRUCTIONS

- If RSM is administering the project, then the RSM Engineer, as the authorized representative of the Department shall provide and sign the following certification upon approval of the WPCP.
- If a Local Agency is administering the project, then both the Local Agency Resident Engineer and the RSM Oversight Engineer shall provide and sign the following certification upon approval of the WPCP.

Is a Local Agency / Private Entity administering the project?

☐ Yes ☐ No

REQUIRED TEXT WHEN RSM IS ADMINISTERING PROJECT

For Use by RSM Only

RSM RESIDENT ENGINEER'S APPROVAL OF WPCP

I, and/or personnel acting under my direction and supervision, have reviewed this WPCP and find that it meets the requirements set forth in the Special Provisions, the RSM SWPPP and WPCP Preparation Manual, and the Standard Specifications Section 7-1.01G - Water Pollution.

RSM Resident Engineer's Signature	Date of WPCP Approval
RSM Resident Engineer's Name (printed)	RSM Resident Engineer's Phone Number

REQUIRED TEXT WHEN LOCAL AGENCY / PRIVATE ENTITY IS ADMINISTERING PROJECT

For Use by Local Agency / Private Entity Only

LOCAL AGENCY / PRIVATE ENTITY RESIDENT ENGINEER'S APPROVAL OF WPCP

I, and/or personnel acting under my direction and supervision, have reviewed this WPCP and find that it meets the requirements set forth in the Special Provisions, the RSM SWPPP and WPCP Preparation Manual, and the Standard Specifications Section 7-1.01G - Water Pollution.

Resident Engineer's Signature	Date of WPCP Approval
Resident Engineer's Name (printed)	Resident Engineer's Phone Number

For Use by RSM Only

RSM OVERSIGHT ENGINEER'S CONCURENCE OF WPCP

I, and/or personnel acting under my direction and supervision, have reviewed this WPCP and concur with the Resident Engineer's findings that it meets the requirements set forth in the Special Provisions, the RSM SWPPP and WPCP Preparation Manual, and the Standard Specifications Section 7-1.01G - Water Pollution.

RSM Oversight Engineer's Signature	Date of WPCP Concurrence
RSM Oversight Engineer's Name	RSM Oversight Engineer's Phone Number

Section 20
Project Information

INSTRUCTIONS

- Provide narrative text addressing the following topics in a format that can be easily understood by a person who is not familiar with the project.
  - Introduction and Project Description:
    - Provide a brief description of the project.
    - Describe the type(s) of work that will be performed.
    - Provide a brief description of the project location, including descriptive items such as county, route, post mile, city, and street names.
    - Describe proximity to receiving waters to which the project will discharge, including surface waters, drainage channels, and drainage systems.
    - Identify drainage system owners (municipality or agency).
  - Unique Site Features:
    - Provide a brief description of any unique site features (water bodies, wetlands, environmentally sensitive area, endangered or protected species, etc.)
    - Describe significant or high-risk activities that may impact stormwater quality. Include any unique features or activities within or adjacent to water bodies (such as dredging, re-use of aerially deposited lead material, large excavations, or work within a water body).
  - Project Schedule: Provide a written or graphical project schedule. A graphical schedule in the form of an image file can be copied into the form field for the graphical schedule. Alternatively the graphical schedule can be manually included in the document. The schedule shall clearly show how the rainy season relates to soil-disturbing and re-stabilization activities. The schedule only needs to be detailed enough to show major activities sequenced with the implementation of construction site BMPs, including:
    - Project start and finish dates
    - Rainy season dates
    - Mobilization dates
    - Mass clearing and grubbing, roadside clearing dates
    - Major grading and excavation dates
    - Dates for special activities named in other permits, such as Fish and Game
    - Rainy season implementation schedule

- Deployment of temporary soil stabilization BMPs
- Deployment of temporary sediment control BMPs
- Deployment of non-stormwater BMPs
- Deployment of waste management and materials pollution control BMPs
- Paving, sawcutting, and any other pavement related operations
- Planned stockpiling operations
- Dates for other significant long-term operations or activities that may plan non-stormwater discharges such as dewatering, grinding, etc.

- Note: Projects located in the Lake Tahoe, Truckee River, East Fork Carson River, or West Fork Carson River Hydrologic Units, and projects above 5,000 ft in elevation in the portions of Mono County or Inyo County within the Lahontan RWQCB are not allowed to perform removal of vegetation nor disturbance of existing ground surface conditions between October 15 of each year and May 1 of the following year; except when there is an emergency situation that threatens the public health and safety, or when the project is granted a variance by the RWQCB Executive Officer.
  - Pollutant Source Identification:
    - Review the contract documents and associated environmental documents to determine the known site contaminants and list them in this section.

EXAMPLE

1. Introduction and Project Description

The project consists of sound wall construction, shoulder work, and PCC pavement removal and replacement along approximately 1300 feet of highway. The project is located on northbound I-5 in Stockton (San Joaquin County), north from W. March Lane. Project runoff is conveyed approximately 2600 feet south to the Calaveras River via a combination of RSM-owned roadside ditches and underground drainage facilities. The Calaveras River discharges to the San Joaquin River approximately 1.9 miles downstream from I-5. The total disturbed area is about 0.8 acres.

2. Unique Site Features:

Relative proximity to Calaveras and San Joaquin Rivers.

3. Project Schedule (graphical):

The attached project schedule shows the projected progress of the project and includes implementation of water pollution control items.

4. Potential Pollutant Sources:

The primary construction activities, related materials, and wastes that have the potential to pollute stormwater include:

a) Soil disturbing activities and resulting exposed soil areas, including minor grading along the shoulder and trenching for conduits and sound wall footings.

b) Slurries from mortar mixing and PCC saw-cutting and placement.

c) Solid wastes from PCC demolition and removal, sound-wall construction, and form work

d) Temporary on-site storage of construction materials, including mortar mix, raw landscaping, soil stabilization materials, and treated lumber.

e) General site litter.

f) Equipment operation and maintenance.

REQUIRED TEXT

1. Introduction and Project Description:

2. Unique Site Features:

3. Project Schedule (graphical):

4. Potential Pollutant Sources:

EXAMPLE: GRAPHICAL SCHEDULE

The graphical Water Pollution Control Schedule is provided on the following page.

INSERT GRAPHICAL WATER POLLUTION CONTROL SCHEDULE

Section 30
Pollution Sources and Control Measures

INSTRUCTIONS

BMP SELECTION PROCESS

- BMPs are selected to reduce or eliminate pollutants in stormwater and non-stormwater discharges associated with construction activities. Described below is the sequence of steps that shall be used to identify BMPs to be included in WPCPs.

  Step 1: Incorporate the temporary water pollution control BMPs that are described in:

  - Contract Special Provisions;
  - Contract Plans;
  - Standard Plans; and
  - Standard Specifications.

  If the BMPs required in Step 1 are inadequate to address potential pollutants in stormwater discharges and non-stormwater discharges, then:

  Step 2: Incorporate the temporary water pollution control BMPs using one or more of the RSM minimum requirements listed in Table 1-1 of the SWPPP/WPCP Preparation Manual.

  Step 3: If the BMPs selected from Steps 1 and 2 are inadequate to address potential pollutants in stormwater discharges and non-stormwater discharges, then incorporate the temporary water pollution control BMPs that are described in Section 4.5 of the SWMP. For reference on these BMPs see the Construction Site Best Management Practices (BMPs) Reference Manual.

- Show the selected BMPs on the WPCDs.
- Complete the BMP implementation tables and descriptions in each of the following sections:

  30.1 Soil Stabilization (Erosion Control) and Sediment Control

  30.2 Construction Site Management

30.1 Soil Stabilization (Erosion Control) and Sediment Control

INSTRUCTIONS

- Use each of the following sections to identify erosion and sediment controls that will be implemented during the project.

  30.1.1 Soil Stabilization Practices

30.1.2 Sediment Control Practices

30.1.3 Sediment Tracking Controls

30.1.4 Wind Erosion Controls

30.1.1 Soil Stabilization BMPs

INSTRUCTIONS

- Soil stabilization consists of source control measures that are designed to prevent soil particles from detaching and becoming suspended in stormwater runoff. Soil stabilization BMPs protect the soil surface by covering and/or binding the soil particles.
- Provide a brief description of soil-disturbing activities, such as clearing and grubbing, grading, excavation, trenching, etc. Show the limits of the soil-disturbed areas on the WPCDs.
- Complete the following BMP implementation table for temporary soil stabilization BMPs.
- Describe the locations and scheduled installations for each selected soil stabilization BMP.
- If the project will not create disturbed soil areas, state as such and check "No" for all BMPs in the soil stabilization selection BMP implementation table and enter "N/A" as the reason not used.

EXAMPLE

The following soil stabilization BMP implementation table indicates the BMPs that shall be implemented to control erosion on the construction site. Implementation and locations of temporary soil stabilization BMPs are shown on the WPCDs in Attachment A and described in this section. The BMP working details can also be found in Attachment A of this WPCP. The following list of BMPs and narrative explain how the selected BMPs will be incorporated into the project.

Soil disturbing activities consist of minor grading along the shoulder and trenching for utilities and sound wall footings as shown on WPCD-2. Existing vegetation will be preserved outside the immediate construction zone as shown.

SS-1 Scheduling

SS-2 Preservation of Existing Vegetation

- Clearing and grubbing will be limited to the boundaries of active construction as shown on WPCD-2. Surrounding areas of existing vegetation will be protected by installing ESA fencing around the drip lines of the trees.

SS-5 Soil Binders (Copolymer)

- BMP SS-5 was selected to minimize interference with the final (permanent) erosion control measures (decorative landscaping). Soil binders will be applied to all non-active soil disturbed areas during the rainy season in conformance with the DSA protection requirements in the Stormwater Pollution Prevention Plan/Water Pollution Control Program Preparation Manual.

REQUIRED TEXT

The following soil stabilization BMP implementation table indicates the BMPs that shall be implemented to control erosion on the construction site. Implementation and locations of temporary soil stabilization BMPs are shown on the WPCDs in Attachment A and described in this section. The BMP working details can also be found in Attachment A of this WPCP. The following list of BMPs and narrative explain how the selected BMPs will be incorporated into the project.

TEMPORARY SOIL STABILIZATION BMPs

CONSTRUCTION BMP ID NO (1)	BMP NAME	MINIMUM REQUIRE-MENT (3)	CONTRACT BID ITEM	BMP USED		IF NOT USED, STATE REASON
				YES	NO	
SS-1	Scheduling	✓	☐	☐	☐	
SS-2	Preservation of Property/ Preservation of Existing Vegetation	✓	☐	☐	☐	
SS-3	Temporary Hydraulic Mulch (Bonded Fiber Matrix)	✓(2)	☐	☐	☐	
	Temporary Hydraulic Mulch (Polymer Stabilized Fiber Matrix)	✓(2)	☐	☐	☐	
SS-4	Temporary Erosion Control (With Temporary Seeding)	✓(2)	☐	☐	☐	
SS-5	Temporary Soil Stabilizer	✓(2)	☐	☐	☐	
SS-6	Temporary Erosion Control (Straw Mulch with Stabilizing Emulsion)	✓(2)	☐	☐	☐	
SS-7	Temporary Erosion Control Blanket (On Slope)	✓(2)	☐	☐	☐	
	Temporary Erosion Control Blanket (In swale or ditch)		☐	☐	☐	
SS-7	Temporary Cover (Plastic Covers)	✓(2)	☐	☐	☐	
SS-8	Temporary Mulch (Wood)		☐	☐	☐	
SS-9	Earth Dikes / Drainage Swales & Lined Swales		☐	☐	☐	
SS-10	Outlet Protection / Velocity Dissipation Devices		☐	☐	☐	
SS-11	Slope Drains		☐	☐	☐	

CONSTRUCTION BMP ID NO [1]	BMP NAME	MINIMUM REQUIRE-MENT [3]	CONTRACT BID ITEM	BMP USED		IF NOT USED, STATE REASON
				YES	NO	
SS-12	Streambank Stabilization		☐	☐	☐	
ALTERNATIVE SOIL STABILIZATION BMPs USED[4] ☐ **Yes** ☒ **No**						**IF USED, STATE REASON**

Notes:
[1] The BMP designations (SS-1, SC-3, etc.) are solely for maintaining continuity with existing RSM documents and are not provided to imply that the Construction Site BMP Reference Manual is a required contract document.
[2] The Contractor shall ensure implementation of one of the two measures listed or a combination thereof to achieve and maintain the contract's rainy and non-rainy season requirements.
[3] Not all minimum requirements may be applicable to every project. Applicability to a specific project shall be determined by the Contractor and approved by the Resident Engineer.
[4] Use of alternative BMPs will require written approval by the Resident Engineer.

INSERT NARRATIVE DESCRIBING SELECTED SOIL STABILIZATION BMPs

30.1.2 Sediment Control BMPs

INSTRUCTIONS

- Sediment controls are used to complement and enhance the selected soil stabilization measures. Sediment controls are designed to intercept runoff and capture suspended soil particles through a settlement or filtration process.
- Provide a brief description of soil-disturbed areas that will necessitate sediment control BMPs. References to the WPCDs and/or Section 30.1.1 are often sufficient.
- Complete the following BMP implementation table for temporary sediment control BMPs. All listed BMPs shall be considered for the project.
- Describe the locations and scheduled installations for each selected sediment control BMP.
- Show selected BMPs on the WPCDs.

EXAMPLE

The following sediment control BMP implementation table indicates the BMPs that shall be implemented to control sediment on the construction site. Implementation and locations of temporary sediment control BMPs are shown on the WPCDs in Attachment A and described in this section. The BMP working details can also be found in Attachment A of this WPCP. The following list of BMPs and narrative explain how the selected BMPs will be incorporated into the project.

Temporary fiber rolls will be used at the toe of slopes and as perimeter sediment controls. According to the contract special provisions, sediment controls for this project are required during the rainy season - continuously on non-active DSAs and before rain on active DSAs. Deployment locations will be as follows:

SC-5 Temporary Fiber Rolls

- Fiber rolls will be deployed along the downstream (southern) construction site perimeter as shown on WPCD-2. Once the drainage channel is constructed and lined, fiber rolls will be extended north, along each side of the channel. See SC-4, Temporary Check Dam, below.

SC-4 Temporary Check Dam

- Concentrated flows will be conveyed by the drainage channel that runs north-south, adjacent to the shoulder. During channel construction, sediment control will be provided by gravel bag check dams, spaced at 30 feet. Once the channel is lined, temporary fiber rolls will be installed along the channel banks to prevent sediment from entering the channel.

REQUIRED TEXT

The following sediment control BMP implementation table indicates the BMPs that shall be implemented to control sediment on the construction site. Implementation and locations of temporary sediment control BMPs are shown on the WPCDs in Attachment A and described in this section. The BMP working details can also be found in Attachment A of this WPCP. The following list of BMPs and narrative explain how the selected BMPs will be incorporated into the project.

Temporary sediment control

CONSTRUCTION BMP ID NO[1]	BMP NAME	MINIMUM REQUIRE-MENT [3]	CONTRACT BID ITEM	BMP USED		IF NOT USED, STATE REASON
				YES	NO	
SC-1	Temporary Silt Fence	✓[2]	☐	☐	☐	
SC-2	Temporary Sediment Basin		☐	☐	☐	
SC-4	Temporary Check Dam		☐	☐	☐	
SC-5	Temporary Fiber Rolls	✓[2]	☐	☐	☐	
SC-6	Temporary Gravel Bag Berm		☐	☐	☐	
SC-7	Street Sweeping	✓	☐	☐	☐	
SC-8	Temporary Sandbags		☐	☐	☐	
SC-9	Temporary Straw Bale Barrier		☐	☐	☐	
SC-10	Temporary Drain Inlet Protection	✓	☐	☐	☐	
ALTERNATIVE SEDIMENT CONTROL BMPs USED[4] ☐ **Yes** ○ **No**						**IF USED, STATE REASON**

Notes:
[1] The BMP designations (SS-1, SC-3, etc.) are solely for maintaining continuity with existing RSM documents and are not provided to imply that the Construction Site BMP Reference Manual is a required contract document.
[2] The Contractor shall ensure implementation of one of the two measures listed or a combination thereof to achieve and maintain the contract's rainy and non-rainy season requirements.
[3] Not all minimum requirements may be applicable to every project. Applicability to a specific project shall be determined by the Contractor and approved by the Resident Engineer.
[4] Use of alternative BMPs will require written approval by the Resident Engineer.

INSERT NARRATIVE DESCRIBING TEMPORARY SEDIMENT CONTROL BMPs

30.1.3 Tracking Control BMPs

INSTRUCTIONS

- Refer to the following BMP implementation table for sediment tracking control BMPs. If a particular BMP will not be used or is not applicable enter a brief reason.
- Tracking controls shall be considered and implemented year round and throughout the duration of the project. Show selected sediment tracking control BMPs on the WPCDs in Attachment A.

REQUIRED TEXT

The following tracking control BMP implementation table indicates the BMPs that shall be implemented to reduce sediment tracking from the construction site onto private or public roads. Implementation and locations of tracking control BMPs are shown on the WPCDs in Attachment A and described in this section. The BMP working details can also be found in Attachment A of this WPCP. The following list of BMPs and narrative explain how the selected BMPs will be incorporated into the project.

TEMPORARY TRACKING CONTROL BMPs

CONSTRUCTION BMP ID NO(1)	BMP NAME	MINIMUM REQUIRE-MENT	CONTRACT BID ITEM	BMP USED		IF NOT USED, STATE REASON
				YES	NO	
SC-7	Street Sweeping		☐	☐	☐	
TC-1	Temporary Construction Entrance		☐	☐	☐	
TC-2	Stabilized Construction Roadway		☐	☐	☐	
TC-3	Temporary Entrance / Outlet Tire Wash		☐	☐	☐	
ALTERNATIVE TRACKING CONTROL BMPs USED(2) ☐ Yes ☐ No						**IF USED, STATE REASON**

Notes:
(1) The BMP designations (SS-1, SC-3, etc.) are solely for maintaining continuity with existing RSM documents and are not provided to imply that the Construction Site BMP Reference Manual is a required contract document.
(2) Use of alternative BMPs will require written approval by the Resident Engineer.

INSERT NARRATIVE DESCRIBING TRACKING CONTROL BMPs

30.1.4 Wind Erosion Control BMPs

INSTRUCTIONS

- Refer to the following BMP implementation table for wind erosion control BMPs. If a particular BMP will not be used or is not applicable enter a brief reason.
- Provide a narrative description of wind erosion control BMPs Give a general approach on how wind erosion control BMPs will be implemented on the project to control dust during construction operations, including stockpile operations at all times.
- If the project will not create disturbed soil areas, indicate this in the narrative description.

REQUIRED TEXT

The following wind erosion control BMP implementation table indicates the BMPs that shall be implemented to control wind erosion on the construction site. Implementation and locations of wind erosion control BMPs are shown on the WPCDs in Attachment A and/or described in this section. The BMP working details can be found in Attachment A. The following list of BMPs and narrative explain how the selected BMPs shall be incorporated into the project.

TEMPORARY WIND EROSION CONTROL

CONSTRUCTION BMP ID NO(1)	BMP NAME	MINIMUM REQUIRE-MENT(2)	CONTRACT BID ITEM	BMP USED		IF NOT USED, STATE REASON
				YES	NO	
WE-1	Wind Erosion Control	✓	☐	☐	☐	
TC-1	Temporary Construction Entrance		☐	☐	☐	
TC-2	Stabilized Construction Roadway		☐	☐	☐	
-----	All Soil Stabilization Measures included in Section 500.3.4		☐	☐	☐	
ALTERNATIVE WIND EROSION CONTROL BMPs USED(3 ☐ **Yes** ☐ **No**						**IF USED, STATE REASON**

Notes:
(1) The BMP designations (SS-1, SC-3, etc.) are solely for maintaining continuity with existing RSM documents and are not provided to imply that the Construction Site BMP Reference Manual is a required contract document.
(2) Not all minimum requirements may be applicable to every project. Applicability to a specific project shall be determined by the Contractor and approved by the Resident Engineer.
(3) Use of alternative BMPs will require written approval by the Resident Engineer.

INSERT NARRATIVE DESCRIBING WIND EROSION CONTROL BMPs

30.2 Construction Site Management

30.2.1 Non-Stormwater Management BMPs

INSTRUCTIONS

- Non-stormwater discharges which are not authorized under the RSM Permit or authorized under a separate NPDES permit are prohibited. Examples of prohibited discharges common to construction activities include:
  - Vehicle and equipment wash water, including concrete washout water.
  - Slurries from concrete cutting and coring operations or AC grinding operations.
  - Slurries from concrete or mortar mixing operations.
  - Blast residue from high-pressure washing of structures or surfaces.
  - Wash water from cleaning painting equipment.
  - Runoff from dust control applications of water or dust palliatives.
  - Sanitary and septic wastes.
- List all activities that have the potential to produce non-stormwater discharges. (Consider dewatering operations and any construction activity that requires water use.) Discuss planned dewatering operations with the Resident Engineer to determine possible requirement for permits and/or treatment. Discuss how mobile operations, such as maintenance and fueling for large or stationary equipment, will be addressed.
- Use the following BMP implementation table to select BMPs as necessary to contain, remove, and dispose potential non-stormwater discharges.
- Describe the locations and scheduled installations for each selected Non-Stormwater Management BMPs.

REQUIRED TEXT

The following BMP implementation table indicates the BMPs that have been selected to control non-stormwater pollution on the construction site. Implementation and locations of non-stormwater control BMPs are shown on the WPCDs in Attachment A and described in this section. The BMP working details that will be adhered to are found in Attachment A of this WPCP.

CONSTRUCTION SITE MANAGEMENT

NON-STORM WATER MANAGEMENT BMPS

BMP No.	BMP	MINIMUM REQUIREMENT	CHECK IF CONTRACT REQUIREMENT	CHECK IF USED	CHECK IF NOT USED	IF NOT USED, STATE REASON
NS-1	Water Conservation Practices					
NS-2	Dewatering Operations					
NS-3	Paving and Grinding Operations					
NS-4	Temporary Stream Crossing					
NS-5	Clear Water Diversion					
NS-6	Illicit Discharge / Illegal Dumping Reporting					
NS-7	Potable Water / Irrigation					
Vehicle and Equipment Operations						
NS-8	Vehicle and Equipment Cleaning					
NS-9	Vehicle and Equipment Fueling					
NS-10	Vehicle and Equipment Maintenance					

INSERT NARRATIVE DESCRIBING NON-STORM WATER MANAGEMENT POLLUTION CONTROL BMPs

30.2.2 Waste Management and Materials Pollution Control BMPs

INSTRUCTIONS

- Waste management consists of implementing procedural and structural BMPs for collecting, handling, storing and disposing of wastes generated by a construction project to prevent the release of waste materials into stormwater discharges. Wastes are going to be generated during construction; however, the methods in which the wastes are collected, stored, and removed will determine the success of the waste management activities. Construction site wastes can range from residues collected from non-stormwater discharges (i.e. paint removal) to general site litter and debris (i.e. empty marker paint cans).

- Material pollution control (materials handling) consist of implementing procedural and structural BMPs for handling, storing and using construction materials to prevent the release of those materials into stormwater discharges. The amount and type of construction materials to be utilized at the site will be dependent upon the type of construction and the length of the construction period. The materials may be used continuously, such as fuel for vehicles and equipment, or the materials may be used for a discrete period, such as fertilizer for landscaping.

- Waste management and materials pollution control BMPs must be implemented to minimize stormwater contact with construction materials, wastes and service areas, and to prevent materials and wastes from being discharged off-site.

- Review project activities to identify likely construction materials and wastes. Identify materials and wastes with special handling or disposal requirements, such as lead contaminated soils. List anticipated materials and wastes below.

- Based on the listed materials and wastes, use the following materials handling and waste management BMP consideration checklist to select appropriate BMPs.

- Describe the locations and scheduled installations for each selected waste management and materials pollution control BMPs. For Solid Waste Management WM-5, a list of waste disposal facilities and the type of waste to be disposed at each facility is provided.

REQUIRED TEXT

The following BMP implementation table indicates the BMPs that have been selected to control construction site wastes and materials. Implementation and locations of materials handling and waste management BMPs are shown on the WPCDs in Attachment A. The BMP working details that will be adhered to are found in Attachment A of this WPCP. The following list of BMPs and narrative explain how the selected BMPs will be incorporated into the project.

Waste Management and Materials Pollution Control BMPs

BMP No.	BMP	MINIMUM REQUIREMENT	CHECK IF CONTRACT REQUIREMENT	CHECK IF USED	CHECK IF NOT USED	IF NOT USED, STATE REASON
WM-1	Material Delivery and Storage					
WM-2	Material Use					
WM-3	Asphalt Concrete Stockpiles					
WM-4	Spill Prevention and Control					
WM-5	Solid Waste Management					
WM-6	Hazardous Waste Management					
WM-7	Contaminated Soil Management					
WM-8	Concrete Waste Management					
WM-9	Sanitary/Septic Waste Management					
WM-10	Liquid Waste Management					

INSERT NARRATIVE DESCRIBING WASTE MANAGEMENT AND MATERIALS POLLUTION CONTROL BMPs

30.3 Water Pollution Control Drawings (WPCDs)

INSTRUCTIONS

- The contractor shall include WPCDs in the WPCP to show the locations, applications, and deployment of the BMPs checked in the preceding sections.
- The WPCDs shall include one or more drawings at a scale sufficient to clearly show on-site drainage patterns and the location of erosion and sediment control BMPs. The WPCDs shall be no smaller than the "reduced plans" (approximately 11" x 17") issued by RSM. A sample WPCD can be referenced in Attachment A of Appendix B of the "SWPPP and WPCP Preparation Manual."
- The WPCDs shall include:
  - Detail sheets showing construction details for the BMPs that shall be used.
  - Location sheets, usually modified layout, grading, stage construction, and/or drainage sheets, showing the locations of BMPs that will be used. Delineation of BMPs to be implemented during project construction will be in the form of construction notes and/or symbols.

REQUIRED TEXT

The WPCDs are included as Attachment A to this Water Pollution Control Program.

30.4 Construction BMP Maintenance, Inspection, and Repair

INSTRUCTIONS

- A program for the regular inspection, maintenance, and repair of BMPs shall be included in the WPCP in Attachment B. The contractor's attention is directed to the Contract Specifications and Special Provisions for requirements for maintenance and inspection of BMPs.
- Appendix B, Attachment B of the "SWPPP and WPCP Preparation Manual", shows a sample Maintenance, Inspection and Repair of Construction Site BMPs form.
- At a minimum, the contractor shall inspect the site before and after storm events, and at 24-hour intervals during extended storms. The Contract Special Provisions may require additional inspections.
- The results of the inspection and assessment shall be recorded on the Construction Site Inspection Checklist included in Appendix B, Attachment C to the "SWPPP and WPCP Preparation Manual," and included as Attachment C of this WPCP.
- A copy of each completed Construction Site Inspection Checklist shall be provided to the Resident Engineer within 24-hours of an inspection, and a copy included in the on-site WPCP.
- A tracking or follow-up procedure must follow any inspection that identifies deficiencies in BMPs.

REQUIRED TEXT

A completed Inspection, Maintenance, and Repair Program shall be provided in Attachment B of the WPCP.

Site inspections shall be conducted by the Contractor's WPCM or other RSM approved 24-hour trained staff at the following minimum frequencies:

- Prior to a forecast storm.
- After a rain event that causes runoff from the construction site.
- At 24-hour intervals during extended rain events.
- Daily inspections within the Lake Tahoe Hydrologic Unit.
- Weekly during the rainy season.
- Every 2 weeks during the non-rainy season; and
- At any other time(s) or intervals of time specified in the Contract Special Provisions.

Completed inspection checklists (Attachment C) will be submitted to the Resident Engineer within 24 hours of inspection. Copies of the completed checklists will be kept with the WPCP. A tracking or follow-up procedure shall follow any inspection that identifies deficiencies in BMPs.

30.5 Training

INSTRUCTIONS

- Individuals responsible for WPCP preparation, implementation, and permit compliance are required to be trained, and the WPCP shall document all training. This includes those personnel responsible for installation, inspection, maintenance, and repair of BMPs. Describe the types of training that the contractor's inspection, maintenance, and repair personnel have received or will receive that are directly related to stormwater pollution prevention.
- Training may be both formal and informal.
- Formal stormwater pollution prevention or erosion and sediment control training sessions may include certification as a Certified Professional in Erosion and Sediment Control (CPESC); workshops offered by the SWRCB, RWQCB, Community College or University of California Extension; or other locally recognized agencies or professional organizations such as the International Erosion Control Association (IECA), Association of Bay Area Governments (ABAG), Association of General Contractors (AGC), etc. Contractors are encouraged to contact the RWQCB or the SWRCB to inquire about availability of training.
- A listing of training organizations, subject matter and classes are located at: http://www.dot.ca.gov/hq/construc/stormwater/stormwater1.html
- The Contractor's WPCM and the WPCP preparer shall have a minimum of 24 hours (3 days) of formal stormwater pollution prevention training.
- Onsite stormwater pollution prevention training shall be conducted on an ongoing basis.
- Document informal stormwater training using the sample training log sheet provided as Attachment G.

- Document formal stormwater training by providing a list of classes and copies of class completion documentation. Documentation shall be submitted to the Resident Engineer within 24 hours of completion of training.
- Training records shall be updated, documented and reported in the WPCP quarterly.

REQUIRED TEXT

The Water Pollution Control Manager (WPCM) assigned to this project is:

Insert WPCM's Name-then TAB

Insert Telephone Number(s)-then TAB

Insert Contractor's Company Name-then TAB

Insert Address 1 then press ENTER to insert Address 2 or TAB to next field

Insert City, State, Zip-then TAB

The WPCM shall have primary responsibility and significant authority for the implementation, maintenance, inspection and amendments to the approved WPCP. The WPCM will be available at all times throughout duration of the project. Duties of the Contractor's WPCM include but are not limited to:

- Ensuring full compliance with the WPCP and the Permit; and
- Implementing all elements of the WPCP.

The WPCM shall have the authority to mobilize crews in order to make immediate repairs to the water pollution control measures.

The training log showing formal and informal training of various personnel is shown in Attachment G. A copy of all training certificate(s) (e.g., RSM 24 Hour Training Class, etc.) for the WPCM and the WPCP Preparer are included in Attachment G. Training records shall be updated, documented and reported in the WPCP quarterly. Documentation of new training shall be submitted to the Resident Engineer within 24-hours of training.

INSERT HERE ANY ADDTIONAL TEXT REGARDING TRAINING OF PERSONNEL.

This WPCP was prepared by INSERT COMPANY, NAME AND PROFESSIONAL REGISTRATION OR OTHER QUALIFICATIONS (INCLUDING INFORMATION REGARDING OTHER TRAINING COURSES, SUCH AS RSM SWPPP PREPARATION TRAINING) OF PERSON THAT PREPARED THE WPCP.

Section 40
Amendments

INSTRUCTIONS

- The WPCP shall be amended whenever there is a change in construction or operations that may cause the discharge of significant quantities of pollutants to surface waters, ground waters, municipal storm drain systems, or when deemed necessary by the Resident Engineer. All WPCP amendments shall be documented in letter format and include revised WPCD sheets, as appropriate. WPCP amendments shall be certified by the contractor and require approval by the RSM or Local Agency / Private Entity Resident Engineer (and RSM Oversight Engineer if applicable). Approved amendments shall be attached to the Contractor's on-site WPCP in Attachment D.
- The following items will be included in the amendment, as appropriate:
  - Discuss who requested the amendment.
  - Describe location of proposed change.
  - Describe reason for change.
  - Describe the original BMP proposed, if any.
  - Describe the new BMP proposed.
  - Include any revised WPCDs for detail or location changes.
  - Include a copy of the Amendment Log in Attachment D.
- The certification form shall be included in Attachment D and shall be signed by the contractor and Resident Engineer (and Oversight Engineer if applicable) for each amendment. The signed forms shall be included with the Amendment.
- If RSM is administering the project, then the RSM Resident Engineer, as the authorized representative of the Department shall provide and sign the following certification.
- If a Local Agency / Private Entity is administering the project, then the Local Agency / Private Entity Resident Engineer shall sign and provide the certification form to the RSM Oversight Engineer for approval.
- The Amendment shall be documented in the following Amendment Log Table. Enter the Amendment number, date, brief description, and name of the person who prepared the Amendment in the table. Include a copy of the Amendment Log in Attachment D.

REQUIRED TEXT

The WPCP shall be amended whenever there is a change in construction or operations that may cause the discharge of significant quantities of pollutants to surface waters, ground waters, municipal storm drain systems, or when deemed necessary by the Resident Engineer. All WPCP amendments shall be documented in letter format and include revised WPCD sheets, as appropriate. WPCP

amendments shall be certified by the contractor and require approval by the RSM or Local Agency / Private Entity Resident Engineer (and RSM Oversight Engineer if applicable). Approved amendments and log shall be attached to the Contractor's on-site WPCP in Attachment D.

Project Name: **START HERE…CLICK HERE TO INSERT PROJECT NAME-THEN TAB TO NEXT FIELD**

RSM Contract Number: **INSERT RSM CONTRACT NUMBER-THEN TAB TO NEXT FIELD.**

Amendment No.	Date	Brief Description of Amendment	Prepared By

Section 50
Reporting

50.1 Discharge Reporting

INSTRUCTIONS

- Discharges will be reported in writing to the Resident Engineer verbally upon discovery and in writing within 7 days (3 days for Districts 7 and 11) of occurrence or as required in the Special Provisions. A Notice of Discharge form for reporting discharges shall be inlcuded in Attachment E. A Discharge Reporting Log shall be included in Attachment F.

- Note: USEPA has issued regulations that define Reportable Quantity (RQ) levels for oil and hazardous substances. These regulations are found in the Code of Federal Regulations at 40 CFR Part 110, Part 117, or Part 302.

REQUIRED TEXT

If a discharge occurs or if the project receives a written notice or order from any regulatory agency, the contractor will immediately notify the Engineer and will file a written report to the Resident Engineer within 7 days (3 days for Districts 7 and 11) of the discharge event, notice, or order. Corrective measures will be implemented immediately following the discharge, notice or order. A Notice of Discharge form is provided in Attachment E. All discharges shall be documented on a Discharge Reporting Log in Attachment F.

The report to the Resident Engineer will contain the following items:

- The date, time, location, nature of operation, and type of discharge, including the cause or nature of the notice or order.
- The BMPs deployed before the discharge event, or prior to receiving notice or order.
- The date of deployment and type of BMPs deployed after the discharge event, or after receiving the notice or order, including additional BMPs installed or planned to reduce or prevent re-occurrence.
- An implementation and maintenance schedule for any affected BMPs.

Discharges requiring reporting include:

- Stormwater from a DSA discharged to a waterway without treatment by a temporary construction BMP.
- Non-stormwater, except conditionally exempted discharges, discharged to a waterway or a storm drain system, without treatment by an approved control measure (BMP).
- Stormwater discharged to a waterway or a storm drain system where the control measures (BMPs) have been overwhelmed or not properly maintained or installed.
- Discharge of hazardous substances above the reportable quantities in 40 CFR 117.3 or 302.4.

- Stormwater runoff containing hazardous substances from spills discharged to a waterway or storm drain system.
- Discharges that may endanger health or the environment.
- Other discharge reporting as directed by the Resident Engineer.

Appendix B – Applicable Standard Plans

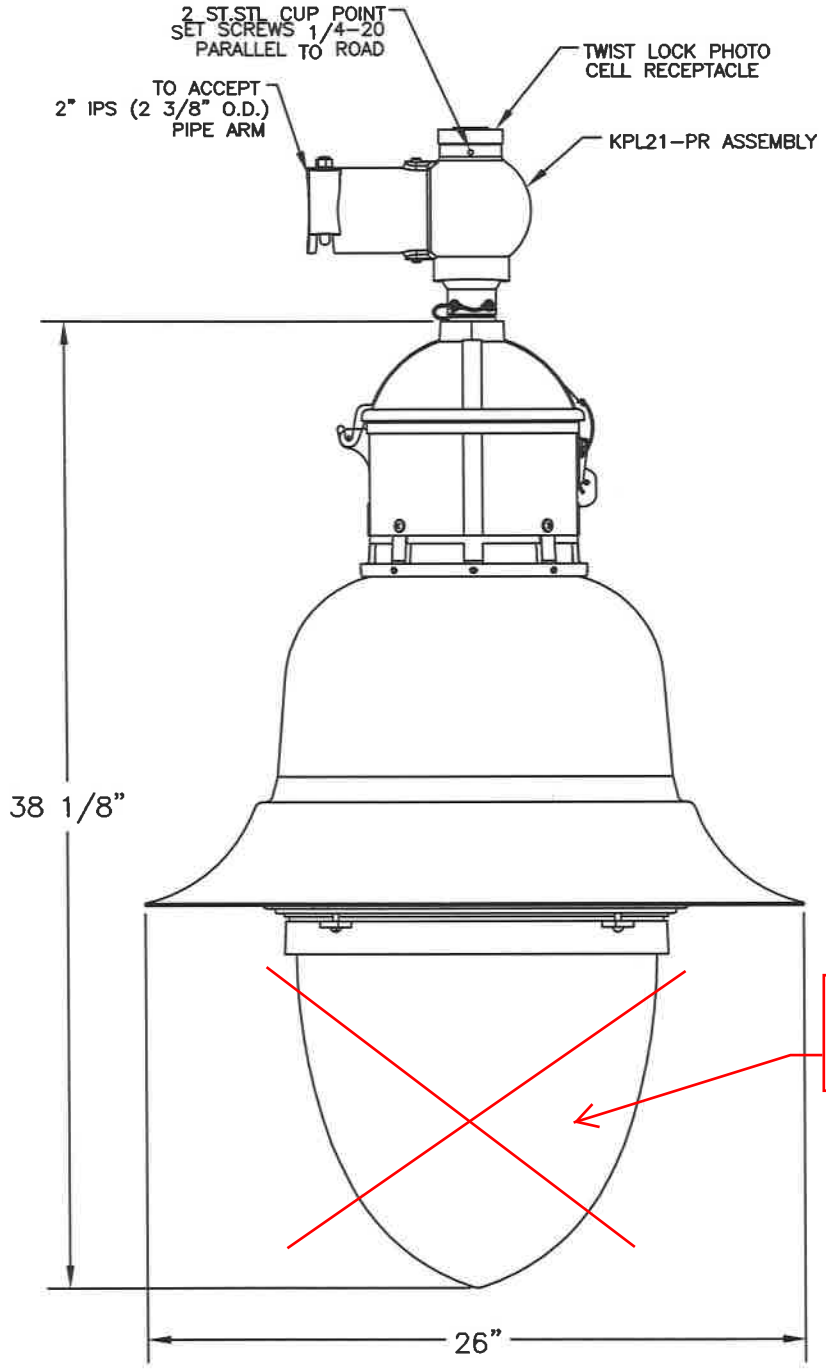

DO NOT INSTALL LIGHT DIFFUSER, PROVIDE TO CITY.

REV.	ALTERATION	DATE	BY

LUMINAIRE SPECIFICATIONS

CATALOGUE NO.: K822-P4RAD-III-150(SSL) -8084-120:277-KPL21-PR7

QUANTITY: 4

OPTICAL SYSTEM: FLAT ARRAY, ACRYLIC DEEP DISH

IES CLASS.: TYPE III

WATTAGE: 150W

SERIES: 8060

CCT / DIODE: 4000K / HE5

LINE VOLTAGE: 120:277V

LIGHT SOURCE: SOLID STATE LIGHTING

Gloss RAL-8014

PAINT: ~~SMOOTH SILVER BRIGHT~~

OPTIONS: RIGID KPL-21 LEVELING DEVICE
7-PRONG TWISTLOCK PHOTOCELL RECEPTACLE ANSI STANDARD C136.41 (PHOTO-EYE BY OTHERS)

OPTIONS:

QUICK DISCONNECT ☒

NOTE:

"NOTE THAT THIS FIXTURE IS BY DEFAULT SHIPPED IN 'NON-ADAPTIVE MODE'. THE FIXTURE IS FIELD SWITCHABLE TO 'ADAPTIVE-MODE' IF ADAPTIVE TECHNOLOGY IS TO BE UTILIZED. NOTE THAT SWITCHING TO 'ADAPTIVE MODE' MAY INCREASE THE NOMINAL INPUT POWER OF THE FIXTURE. PLEASE CONTACT THE FACTORY FOR FURTHER DETAILS"

CUSTOMER APPROVAL & DATE: _____

King Luminaire • StressCrete • Est. 1953

STRESSCRETE GROUP

Manufacturing Locations:

Burlington, Ontario 1-800-268-7809

Northport, Alabama 1-800-435-6563

Atchison, Kansas 1-800-837-1024

Jefferson, Ohio 1-800-268-7809

CUSTOMER ORDER No:	
RE111616 888-4693	
KING U.S. ORDER No:	
A14564	

PROJECT/CUSTOMER: CITY OF RANCHO SANTA MARGARITA - LED PENDANTS

DRAWN BY:	AT:	CHECKED BY	DATE:	REVISION:
A. ALVELA	SC1		02/08/16	

DRAWING TYPE:	DRAWING NUMBER:
APPROVAL DWG.	A14564

HUNTINGTON
SERIES

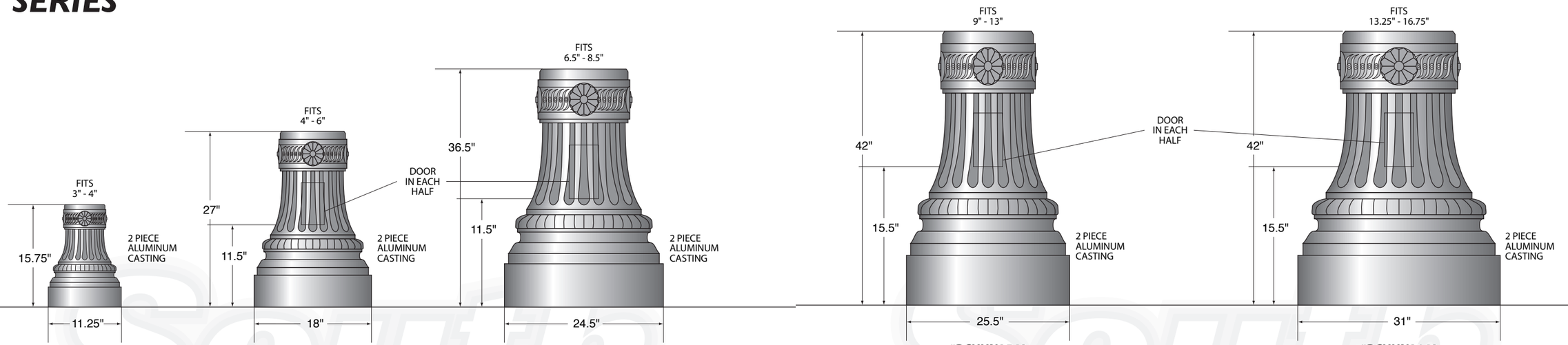

#BCHUN1115 HUNTINGTON SERIES

#BCHUN1827 HUNTINGTON SERIES

#BCHUN2436 HUNTINGTON SERIES

#BCHUN2542 HUNTINGTON SERIES

#BCHUN3142 HUNTINGTON SERIES

STERLING
SERIES

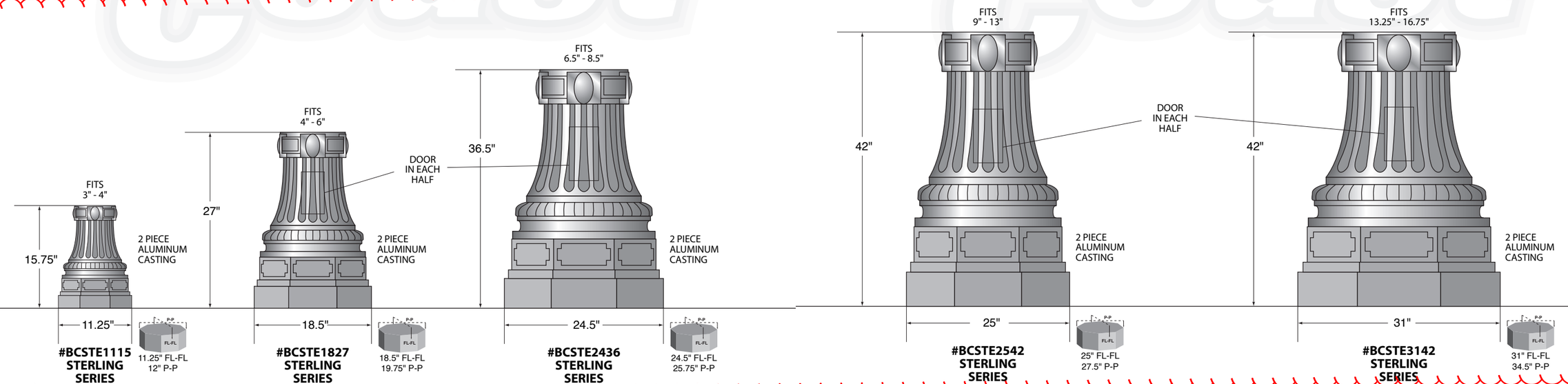

#BCSTE1115 STERLING SERIES
11.25" FL-FL
12" P-P

#BCSTE1827 STERLING SERIES
18.5" FL-FL
19.75" P-P

#BCSTE2436 STERLING SERIES
24.5" FL-FL
25.75" P-P

#BCSTE2542 STERLING SERIES
25" FL-FL
27.5" P-P

#BCSTE3142 STERLING SERIES
31" FL-FL
34.5" P-P

Due to continuring improvement, South Coast Lighting & Design, Inc. reserves the right to change dimensions, designs, and construction from that which is shown in this brochure.

1391 CALLE AVANZADO SAN CLEMENTE, CA. 92673 VOICE 949.276.8850 • FAX 949.276.8855
GARYK@SOUTHCOASTLIGHTING.COM • WWW.SOUTHCOASTLIGHTING.COM

Due to continuring improvement, South Coast Lighting & Design, Inc. reserves the right to change dimensions, designs, and construction from that which is shown in this brochure.

1391 CALLE AVANZADO SAN CLEMENTE, CA. 92673 VOICE 949.276.8850 • FAX 949.276.8855
GARYK@SOUTHCOASTLIGHTING.COM • WWW.SOUTHCOASTLIGHTING.COM

REV.	REV. #	REVISION NOTE	DATE	CHECKED BY

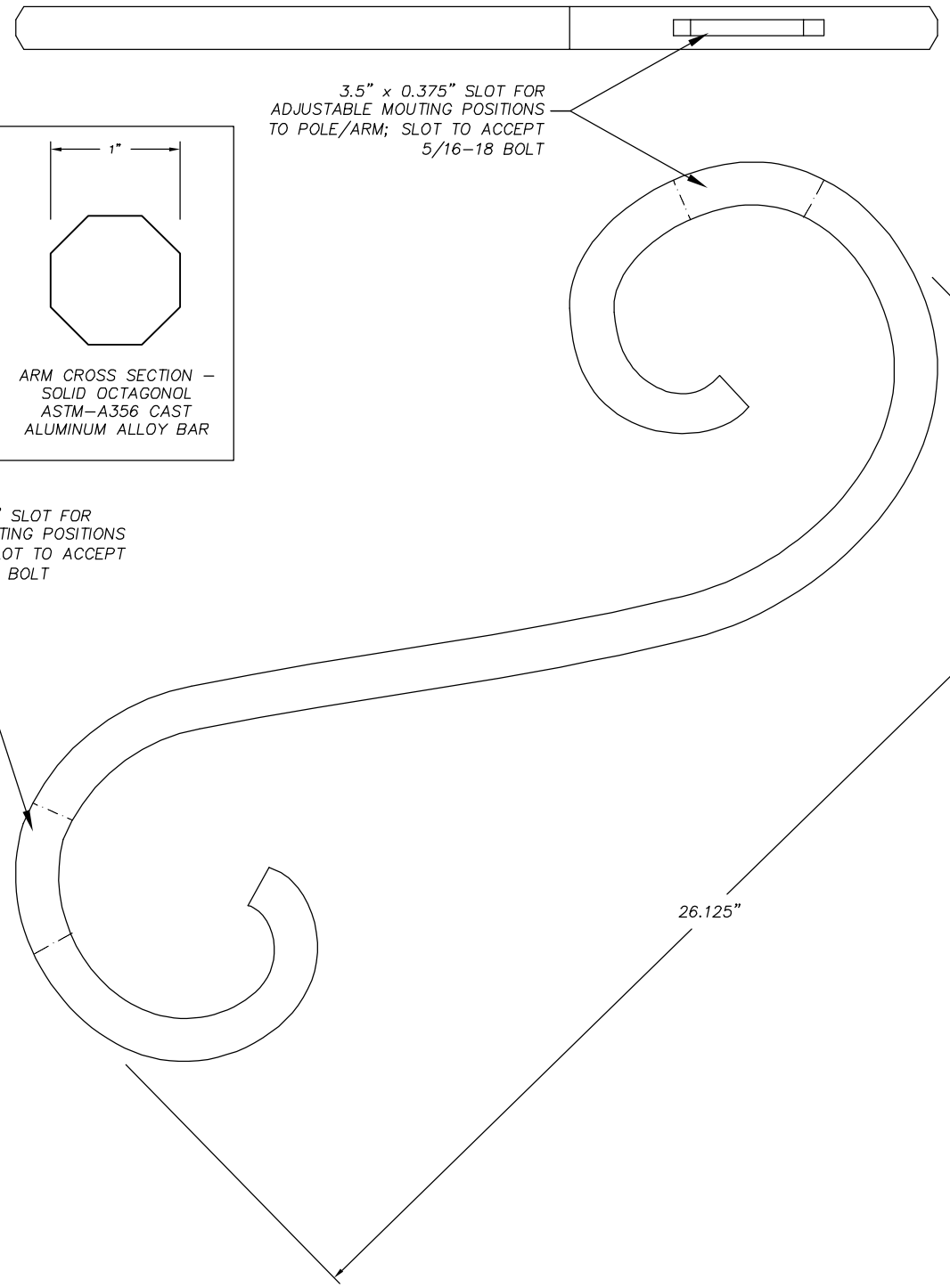

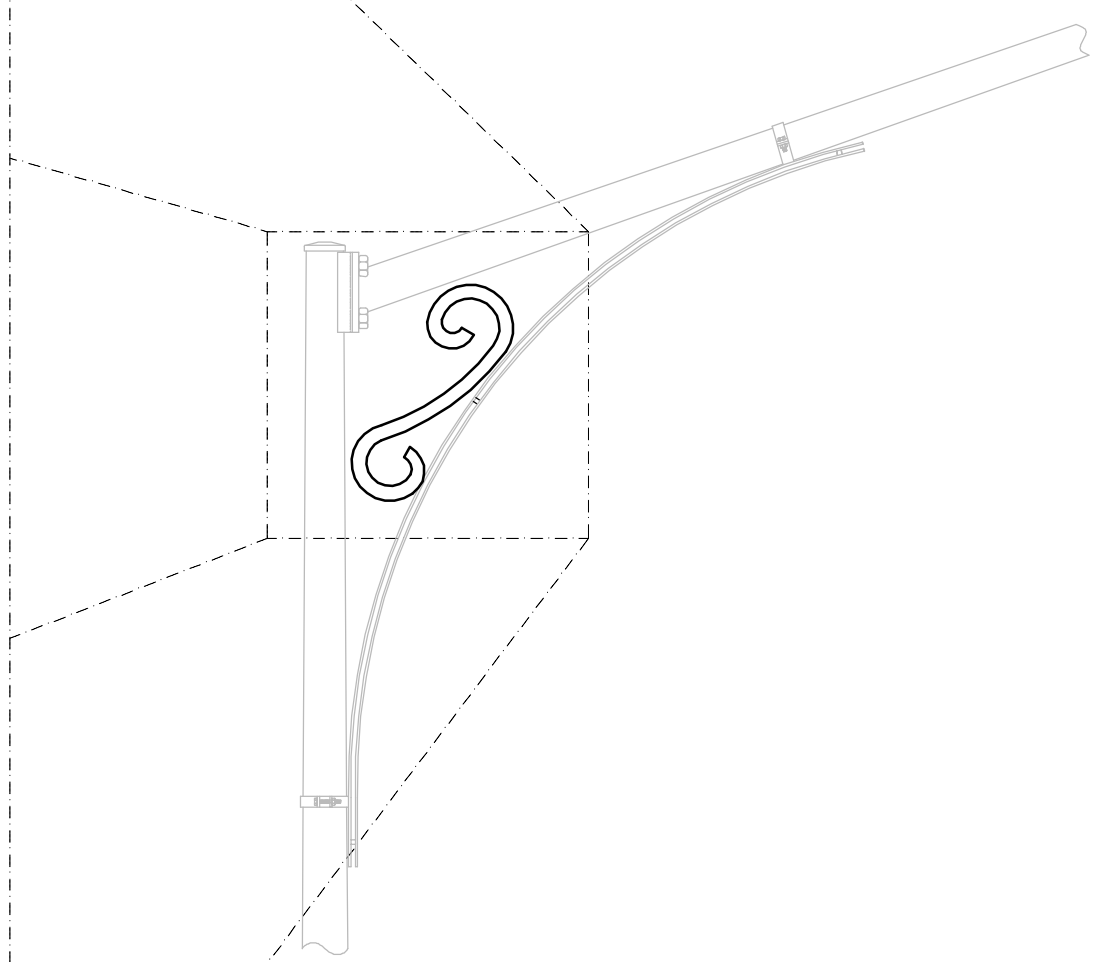

SOUTH COAST LIGHTING & DESIGN
1391 CALLE AVANZADO, SAN CLEMENTE, CA. 92673
VOICE - 949.276.8850 / FAX - 949.276.8855
GARYK@SOUTHCOASTLIGHTING.COM / WWW.SOUTHCOASTLIGHTING.COM

DUE TO CONTINUING IMPROVEMENTS, SOUTH COAST LIGHTING & DESIGN, INC RESERVES THE RIGHT TO CHANGE DIMENSIONS, DESIGNS, AND CONSTRUCTION FROM THAT WHICH IS SHOWN IN THIS BROCHURE. CONTACT FACTORY FOR DETAILED ENGINEERING DRAWINGS

DRAWN BY:	CHECKED BY:	APPROVED BY:	FILENAME:	DATE:
R.R.	__	__	"S" SCROLL	5.13.15

CUSTOMER:	PROJECT NAME:	
SOUTH COAST LIGHTING	SCROLLS	
	DRAWING NUMBER: R-051315-1P	SHEET NUMBER: 1 OF 1

REV.	REV. #	REVISION NOTE	DATE	CHECKED BY

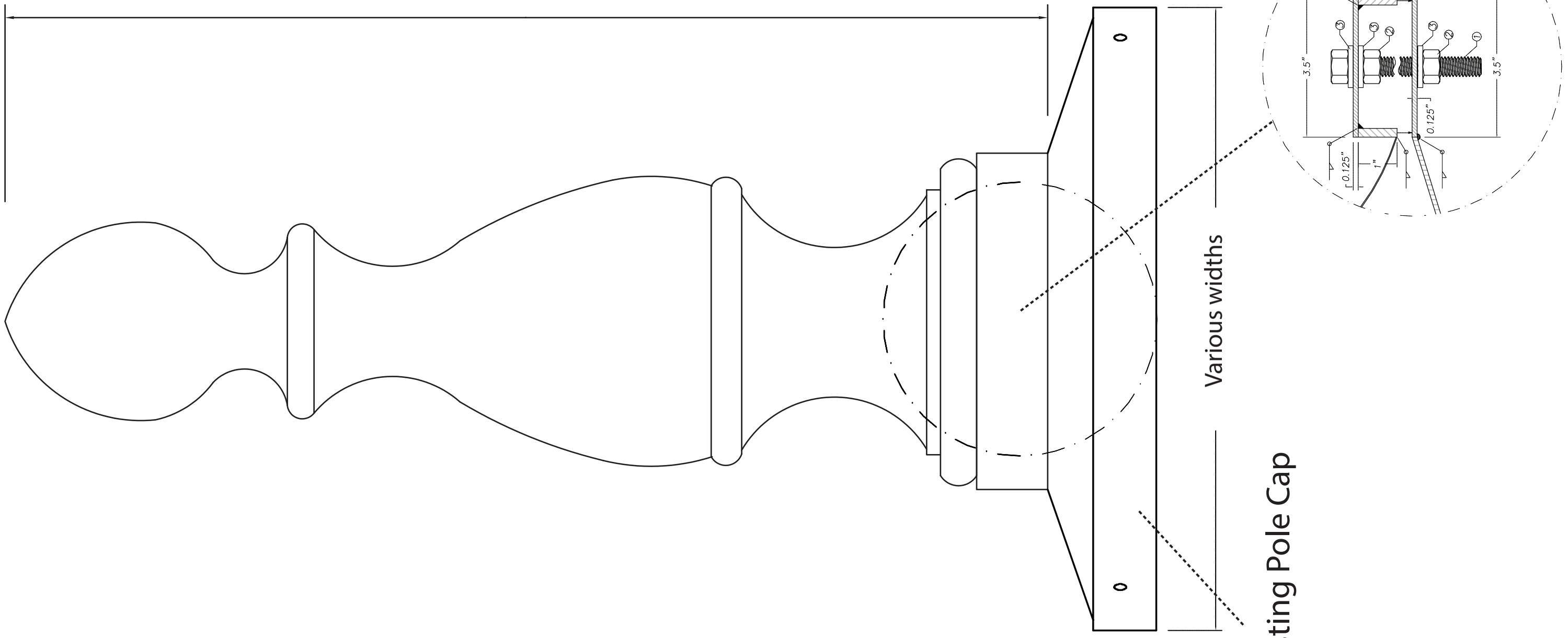

SOUTH COAST LIGHTING & DESIGN
1391 CALLE AVANZADO, SAN CLEMENTE, CA. 92673
VOICE - 949.276.8850 / FAX - 949.276.8855
GARYK@SOUTHCOASTLIGHTING.COM / WWW.SOUTHCOASTLIGHTING.COM

DUE TO CONTINUING IMPROVEMENTS, SOUTH COAST LIGHTING & DESIGN, INC RESERVES THE RIGHT TO CHANGE DIMENSIONS, DESIGNS, AND CONSTRUCTION FROM THAT WHICH IS SHOWN IN THIS BROCHURE. CONTACT FACTORY FOR DETAILED ENGINEERING DRAWINGS

DRAWN BY:	CHECKED BY:	APPROVED BY:	FILENAME:	DATE:
R.R.	__	__	ALHAMBRA_2_PC_FINIAL	11.8.08

CUSTOMER: _____

PROJECT NAME: ALHAMBRA 2 PC. ARM ASSEMBLY

DRAWING NUMBER: 08-P00007-110808

SHEET NUMBER: 1 OF 1

Appendix C – FY 26/27 Traffic Signal Enhancements Project Plans

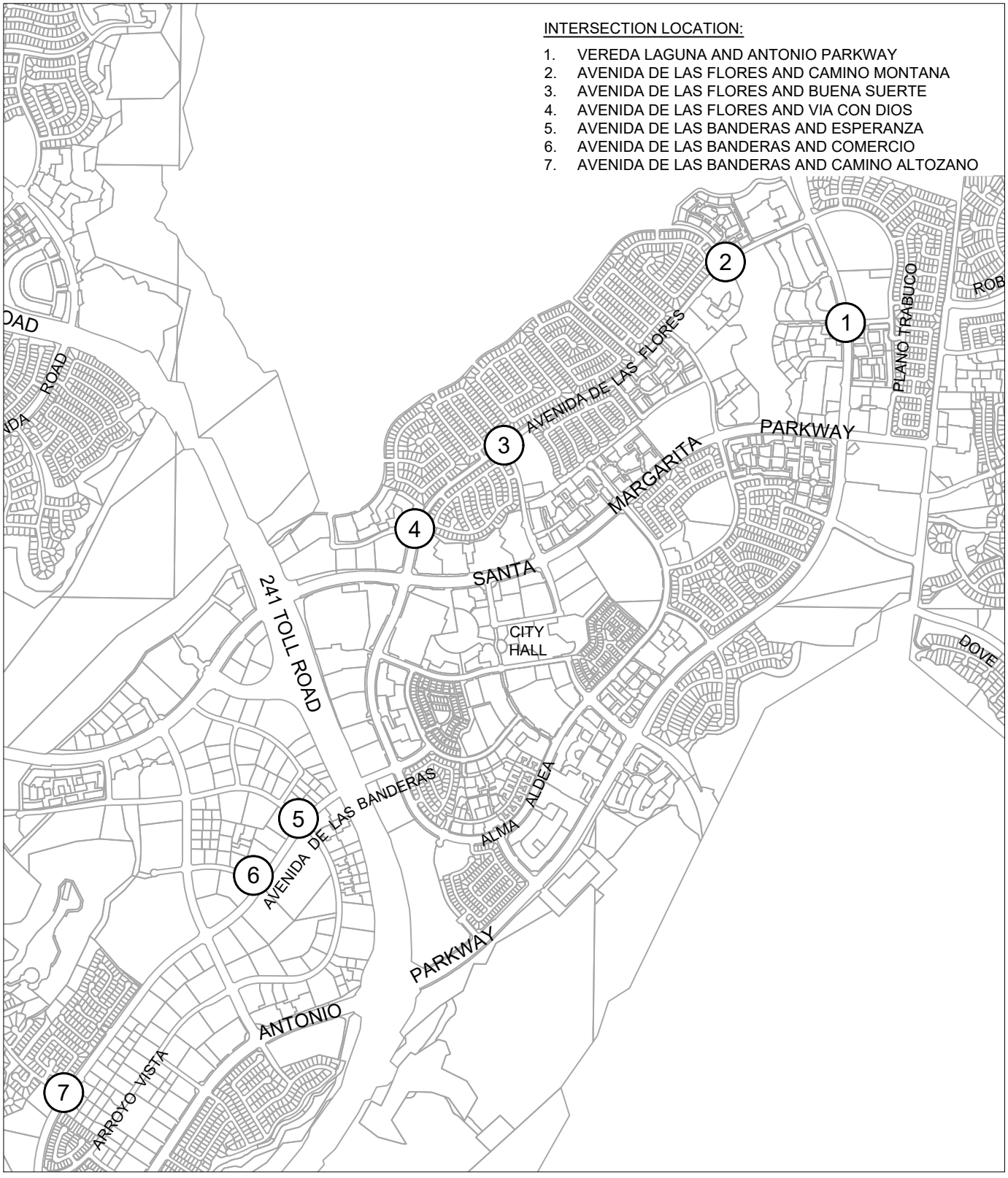

City of
Rancho Santa Margarita

FY 2026-2027
TRAFFIC SIGNAL ENHANCEMENT AT

VARIOUS LOCATIONS

LOCATION MAP

LEGEND

(#) LOCATION NUMBER

NOT TO SCALE

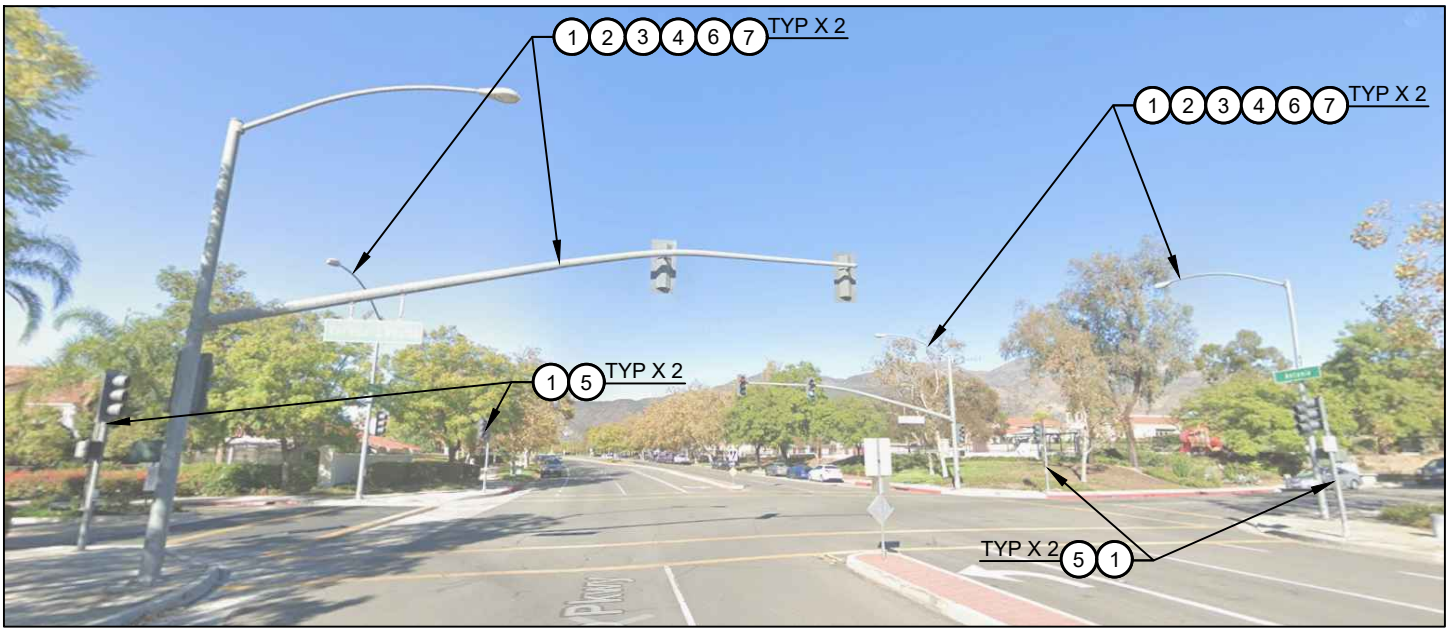

ANTONIO PARKWAY AND VEREDA LAGUNA
LOCATION 1

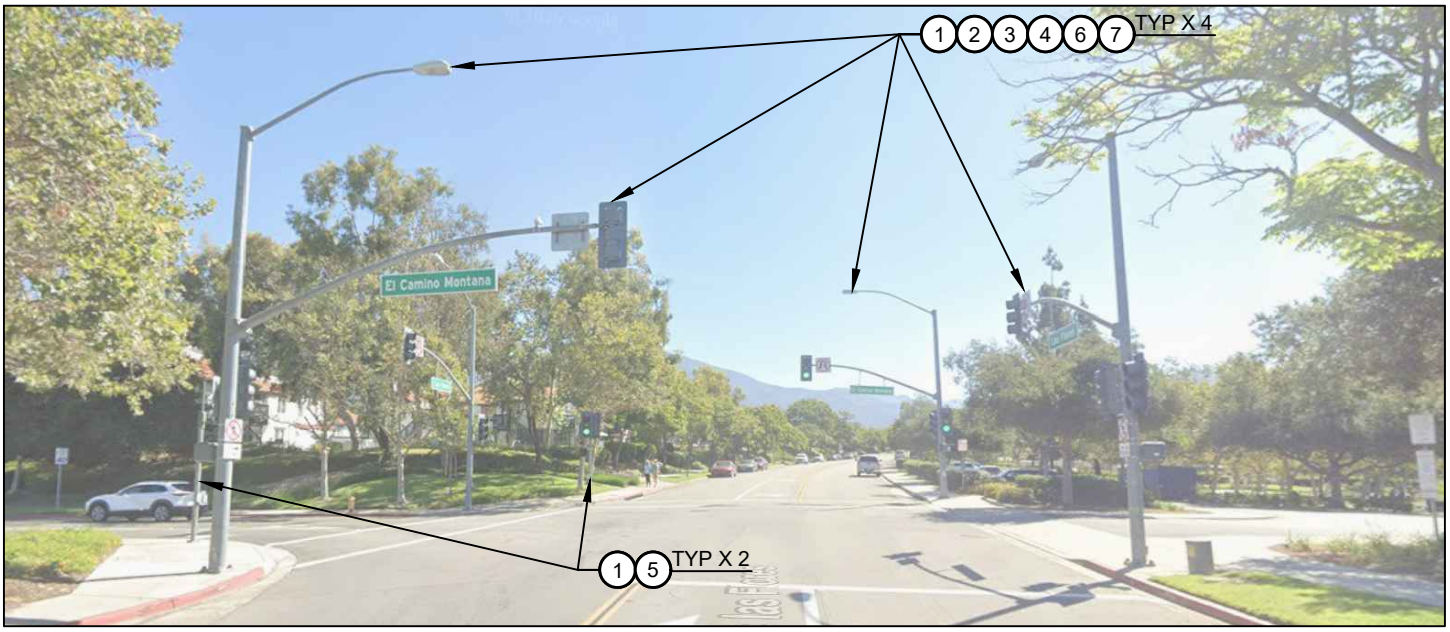

AVENIDA DE LAS FLORES AND EL CAMINO MONTANA
LOCATION 2

CONSTRUCTION NOTES:

1. PREPARE, PAINT, AND INSTALL CITY FURNISHED DECORATIVE BASE, MODEL NO. BCSTE TO BE SPECIFIED ONSITE PRIOR TO INSTALLATION.
2. PREPARE, PAINT, AND INSTALL CITY FURNISHED SCROLL.
3. PREPARE, PAINT, AND INSTALL CITY FURNISHED FINIAL.
4. PREPARE, PAINT, AND INSTALL CITY FURNISHED LED PENDANT. LIGHT DIFFUSER NOT TO BE INSTALLED.
5. PREPARE AND PAINT TRAFFIC SIGNAL POLE (NO MAST ARM).
6. PREPARE AND PAINT TRAFFIC SIGNAL AND LIGHTING POLE. (INCLUDING MAST ARM).
7. INSTALL STREET LIGHT SHIELDS. (CITY PROVIDED).

City of
Rancho Santa Margarita

FY 2026-2027
TRAFFIC SIGNAL ENHANCEMENT AT

ANTONIO PARKWAY AND VEREDA LAGUNA
AVENIDA DE LAS FLORES AND CAMINO MONTANA

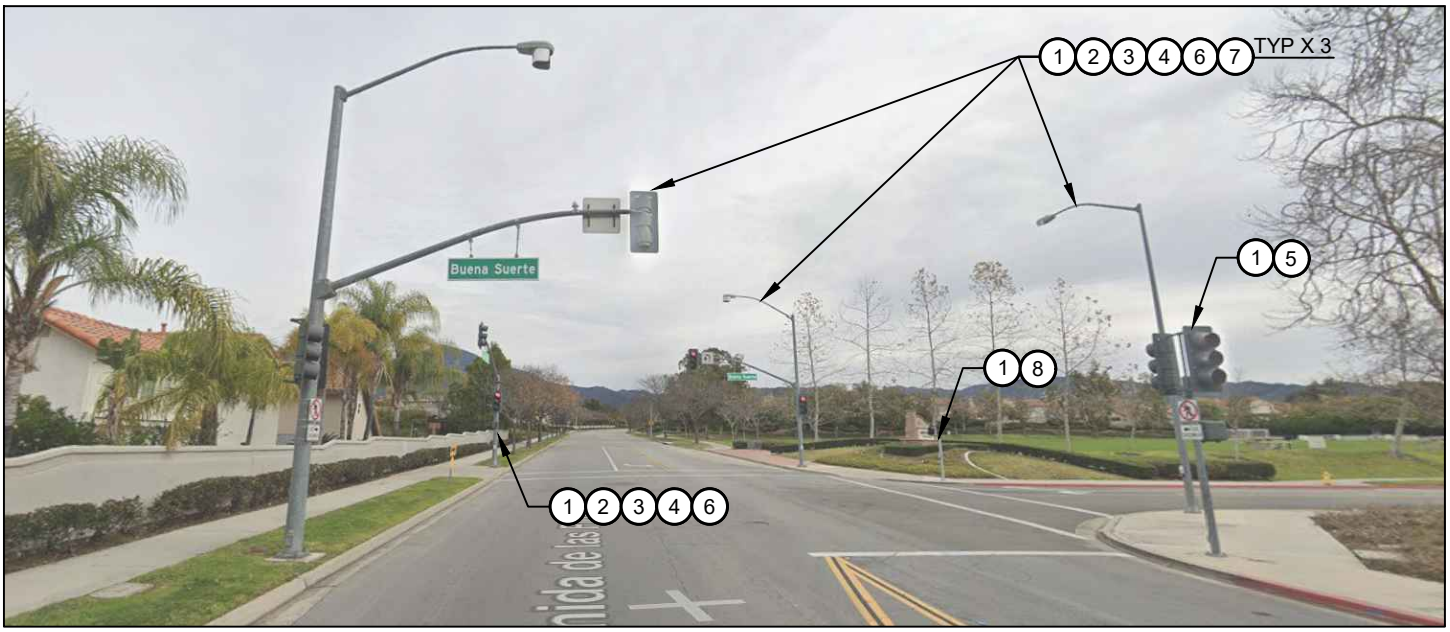

AVENIDA DE LAS FLORES AND BUENA SUERTE
LOCATION 3



AVENIDA DE LAS FLORES AND VIA CON DIOS
LOCATION 4

CONSTRUCTION NOTES:

1. PREPARE, PAINT, AND INSTALL CITY FURNISHED DECORATIVE BASE, MODEL NO. BCSTE TO BE SPECIFIED ONSITE PRIOR TO INSTALLATION.
2. PREPARE, PAINT, AND INSTALL CITY FURNISHED SCROLL.
3. PREPARE, PAINT, AND INSTALL CITY FURNISHED FINIAL.
4. PREPARE, PAINT, AND INSTALL CITY FURNISHED LED PENDANT. LIGHT DIFFUSER NOT TO BE INSTALLED.
5. PREPARE AND PAINT TRAFFIC SIGNAL POLE (NO MAST ARM).
6. PREPARE AND PAINT TRAFFIC SIGNAL AND LIGHTING POLE. (INCLUDING MAST ARM).
7. INSTALL STREET LIGHT SHIELDS. (CITY PROVIDED).
8. PREPARE AND PAINT PEDESTRIAN PUSH BUTTON

City of
Rancho Santa Margarita

FY 2026-2027
TRAFFIC SIGNAL ENHANCEMENT AT

AVENIDA DE LAS FLORES AND BUENA SUERTE
AVENIDA DE LAS FLORES AND VIA CON DIOS

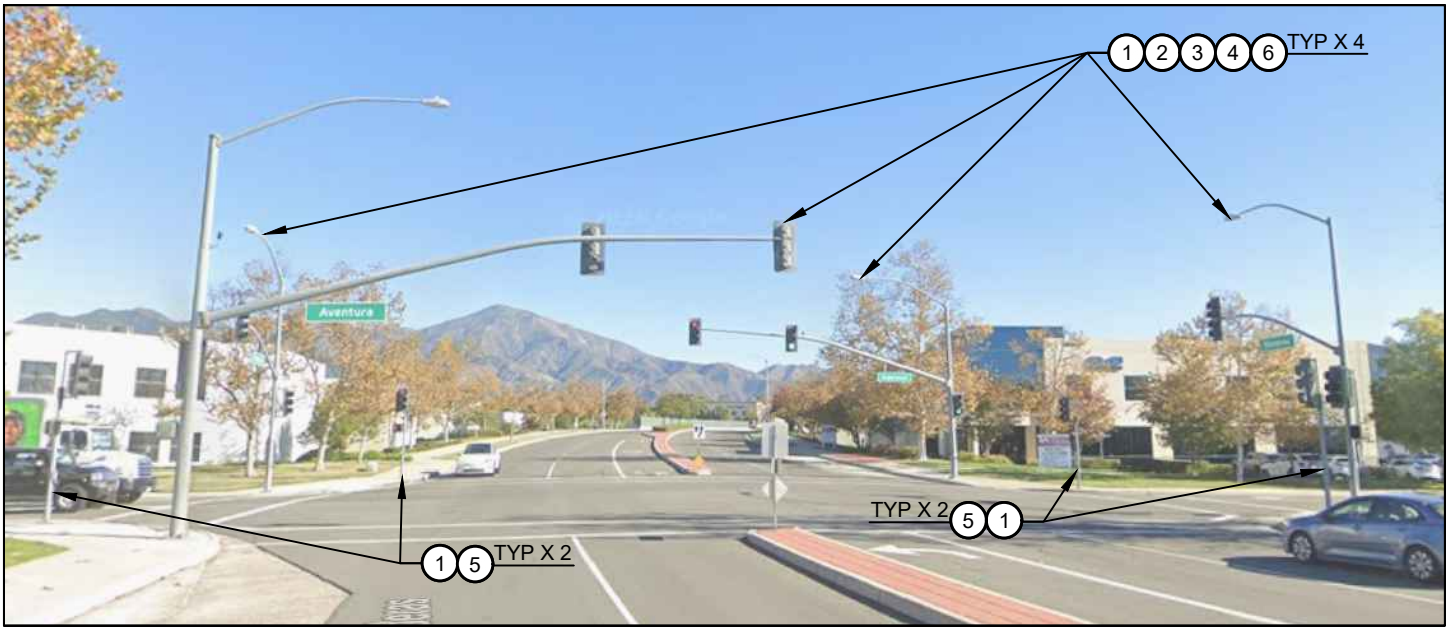

AVENIDA DE LAS BANDERAS AND ESPERANZA
LOCATION 5

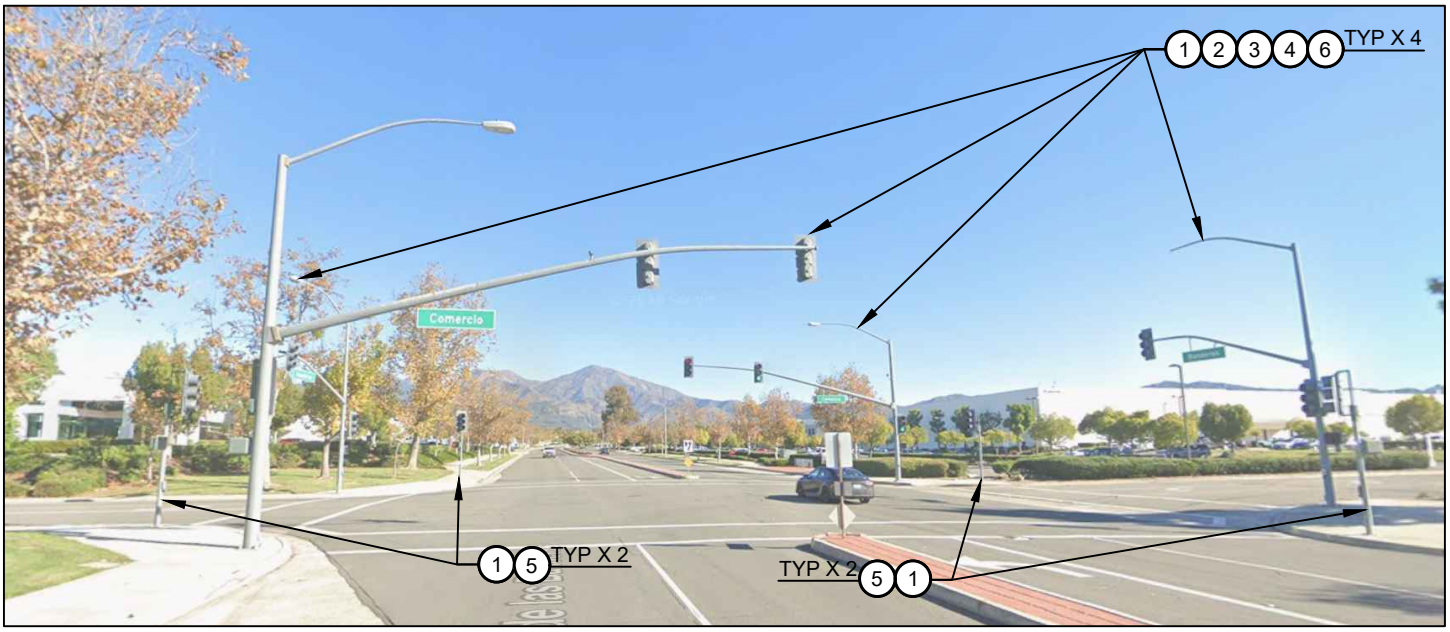

AVENIDA DE LAS BANDERAS AND COMERCIO
LOCATION 6

CONSTRUCTION NOTES:

1. PREPARE, PAINT, AND INSTALL CITY FURNISHED DECORATIVE BASE, MODEL NO. BCSTE TO BE SPECIFIED ONSITE PRIOR TO INSTALLATION.
2. PREPARE, PAINT, AND INSTALL CITY FURNISHED SCROLL.
3. PREPARE, PAINT, AND INSTALL CITY FURNISHED FINIAL.
4. PREPARE, PAINT, AND INSTALL CITY FURNISHED LED PENDANT. LIGHT DIFFUSER NOT TO BE INSTALLED.
5. PREPARE AND PAINT TRAFFIC SIGNAL POLE (NO MAST ARM).
6. PREPARE AND PAINT TRAFFIC SIGNAL AND LIGHTING POLE. (INCLUDING MAST ARM).

City of
Rancho Santa Margarita

FY 2026-2027
TRAFFIC SIGNAL ENHANCEMENT AT

AVENIDA DE LAS BANDERAS AND ESPERANZA
AVENIDA DE LAS BANDERAS AND COMERCIO



AVENIDA DE LAS BANDERAS AND CAMINO ALTOZANO
LOCATION 7

CONSTRUCTION NOTES:

1. PREPARE, PAINT, AND INSTALL CITY FURNISHED DECORATIVE BASE, MODEL NO. BCSTE TO BE SPECIFIED ONSITE PRIOR TO INSTALLATION.
2. PREPARE, PAINT, AND INSTALL CITY FURNISHED SCROLL.
3. PREPARE, PAINT, AND INSTALL CITY FURNISHED FINIAL.
4. PREPARE, PAINT, AND INSTALL CITY FURNISHED LED PENDANT. LIGHT DIFFUSER NOT TO BE INSTALLED.
5. PREPARE AND PAINT TRAFFIC SIGNAL POLE (NO MAST ARM).
6. PREPARE AND PAINT TRAFFIC SIGNAL AND LIGHTING POLE. (INCLUDING MAST ARM).

City of
Rancho Santa Margarita

FY 2026-2027
TRAFFIC SIGNAL ENHANCEMENT AT

AVENIDA DE LAS BANDERAS AND ESPERANZA
AVENIDA DE LAS BANDERAS AND COMERCIO

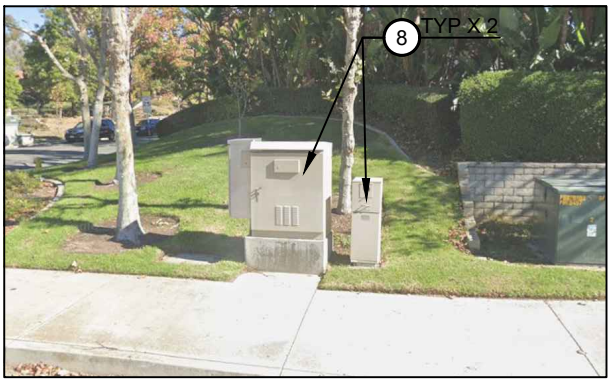

ANTONIO PARKWAY AND VEREDA LAGUNA
LOCATION 1



AVENIDA DE LAS FLORES AND CAMINO MONTANA
LOCATION 2



AVENIDA DE LAS FLORES AND BUENA SUERTE
LOCATION 3



AVENIDA DE LAS FLORES AND VIA CON DIOS
LOCATION 4

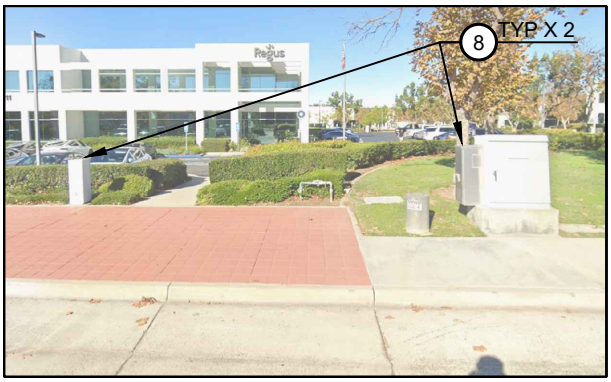

AVENIDA DE LAS BANDERAS AND ESPERANZA
LOCATION 5

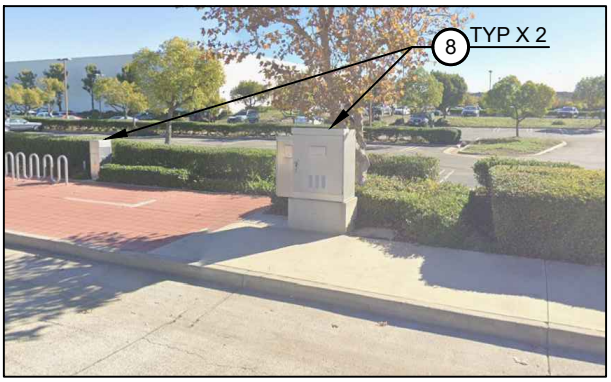

AVENIDA DE LAS BANDERAS AND COMERCIO
LOCATION 6

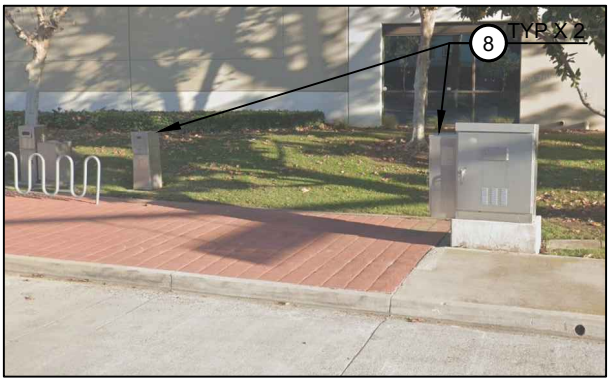

AVENIDA DE LAS BANDERAS AND CAMINO ALTOZANO
LOCATION 7

City of
Rancho Santa Margarita

FY 2026-2027
TRAFFIC SIGNAL ENHANCEMENT AT

CABINET LOCATIONS

CONSTRUCTION NOTES:

(8) PREPARE AND PAINT UTILITY CABINET. VARIOUS SIZES.

Appendix D – Encroachment Permit Application

ENCROACHMENT PERMIT APPLICATION PACKAGE

CITY OF RANCHO SANTA MARGARITA
22112 El Paseo
Rancho Santa Margarita, CA 92688
(949) 635-1800

July 2021

ENCROACHMENT PERMIT INSTRUCTIONS

1. Obtain Encroachment Permit Application Package via City website, e-mail, or pick up at City Hall.
2. Submit completed Encroachment Permit Application to the Public Works Department for review, in its entirety including:
    a. Completed Encroachment Permit form.
    b. Plans, exhibits, and/or sketches of work to be performed.
    c. Insurance, if required.
    d. Signed *Indemnity and Insurance Requirements* form.
    e. Signed *Statement of Intent to Comply with Minimum Stormwater Permit Requirements* form.
    f. Surety, if required. Surety forms are available on the City's website (http://www.cityofrsm.org/depts/public_works/forms.asp)
3. The Public Works Department will review, calculate fee/deposits, and develop of conditions of approval to be provided to the Applicant.
    a. Fees and/or deposits must be submitted to the Public Works Department prior to approval of permit.
4. Upon receipt of fee/deposit payments, and final signature approval, the Public Works Department shall issue permit.
5. Upon issuance of the approved encroachment permit, please contact the Public Works Superintendent at least 2 days prior to permit work (949) 635-1800.

INSPECTION PHONE/EMAIL: **(949) 635-1800 ext. 6102** **tgregory@cityofrsm.org** **Inspection office shall be notified at least two (2) work days prior to commencing permitted use. Failure to obtain inspection shall void this permit.**	**City of Rancho Santa Margarita**  **ENCROACHMENT PERMIT APPLICATION**	Public Works Department 22112 El Paseo Rancho Santa Margarita, CA 92688

Tract /PM No.	
Permit No:	EP
Effective Date:	
Expiration Date	

Applicant: _____ Phone-Day: _____

Contact: _____ Email: _____ Phone-Night: _____

Description of Work: _____

_____

Location of Work: _____

Estimated Start Date: _____ Estimated Completion Date: _____

INDEMNIFICATION

This Encroachment Permit, if granted, is made on the express condition that the City shall be free from any and all liability resulting from its issuance as provided for in Rancho Santa Margarita Municipal Code Sec. 11.07.040 and the Indemnity and Hold Harmless Agreement attached hereto.

Applicant Signature _____ Name: _____ Title: _____ Date: _____

(See attached signature requirements)

FOR CITY USE ONLY

Street Improvement? _____

Sewer/Water Improvement? _____

Other Improvements: _____

Requirements Checked Are Applicable

- ☐ All traffic control per MUTCD.
- ☐ Asphalt concrete shall be saw cut prior to replacement
- ☐ 90% compaction, verified by tests, is required in dirt excavated area.
- ☐ Replace existing striping as directed by City Inspector
- ☐ Replacement AC pavement to be existing section plus 1" over sand slurry backfill, "T" cut 1' min. on both sides.
- ☐ Longitudinal trenches over 50' in length shall be cold planed to a 1" depth by 10' wide and machine capped.
- ☐ Trenches exceeding five feet in depth require shoring plans and a permit from the California Division of Industrial Safety.
- ☐ Portland cement concrete shall be saw cut and removed to existing control joints.
- ☐ Trench backfill shall be 1 ½ sand slurry unless otherwise directed by City Engineer.
- ☐ Trench plates and temporary AC to be on site prior to start of work.

FEE DESCRIPTION	**FEE AMOUNT**
Encroachment Permit Fee:	$
Inspection Fee:	$
Plan Check Fee:	$
TOTAL DUE:	$
DATE FEES RECEIVED:	

Bond Description	**Bond No.**	**Amount**
Faithful Performance:		
Labor and Materials:		
Monumentation:		
Sewer- Faithful Performance:		
Water- Faithful Performance:		

IF APPLICABLE, BONDS SHALL BE HELD FOR A PERIOD OF ONE (1) YEAR AFTER FINAL INSPECTION FOR WARRANTY PURPOSES. A REQUEST MAY BE MADE TO REDUCE THE WARRANTY BOND FROM THE ORIGINAL BOND AMOUNT, TO BE EVALUATED ON A CASE-BY-CASE BASIS.

Contractor: _____

License Number: _____

Class: _____

Contact Person: _____

Telephone Number: _____

Comments: _____

THIS IS YOUR PERMIT WHEN SIGNED BY THE ENGINEERING DIVISION

Permit and approved plans shall be maintained on job site. Permittee shall comply with regulations on reverse side of permit and attachments. Call Underground Service Alert (USA) at 1-800-422-4133 at least 48 hours prior to excavating. This permit shall be non-transferable. **Void if not started in 90 days and continued to completion. ANY WORK DONE WITHOUT PROPER INSPECTION WILL BE SUBJECT TO REJECTION.**

Insurance Documents: ☐ Submitted ☐ Approved Construction Plans: ☐ Submitted ☐ Reviewed ☐ N/A

Traffic Control by Registered Traffic Engineer: ☐ MUTCD ☐ Submitted ☐ Reviewed ☐ N/A

Shoring Plans by Registered Civil Engineer: ☐ Submitted ☐ Reviewed ☐ N/A

Public Works Approval: _____ **Date:** _____

STANDARD PROVISIONS

1. Should any damage or injury to City property occur as a result of the exercise of the rights herein granted, Permittee shall immediately, upon the written demand of City, restore such property to the condition of same on the date of the occurrence of said damage or injury at Permittee's sole cost or expense. The question as to whether or not any such damage or injury has been caused to the property shall be determined by the City Engineer or designee and that determination shall be final. In the event repair by City is necessary; Permittee shall pay and/or reimburse the City the full cost of such repairs.

2. The City reserves the right to perform any work upon any portion or all of the area covered by this Permit, or to do any other work necessary at any time. Such work may be performed without incurring any liability of any nature whatsoever to the Permittee. It is further understood and agreed that the City reserves unto itself the rights of ingress over all or any portion of the subject area.

3. Neither this Permit nor any of the rights herein granted shall be assigned without the prior written approval of the City. Permit is void upon expiration date. A new fee will be assessed thereafter.

4. By acceptance of this Permit, Permittee acknowledges and assumes all responsibility for compliance with requirements of other regulatory agencies including but not limited to zoning regulations applicable ordinances and laws of the City, County of Orange, the State of California or others having regulatory control over the use granted herein.

5. All underground work requires "Injury Identification Number" From Underground Service Alert Regional Notification Center (Ref – Government Code, Section 42165 and 4217). Call 1-800-422-4133.

6. A copy of this Permit and approved plans, if applicable, shall be maintained at the site of work and be shown to any authorized representative of the City, or other regulatory governing agency upon request.

7. No work shall be performed within the City right of ways without the full knowledge of City Engineer or designee, who shall be given not less than two work days advance notice of the initiation of permitted use. Failure of Permittee to obtain inspection shall void this permit and necessitate reapplication by Permittee.

   Permittee further agrees that all operations within City right of ways are subject to the operations of City and other authorized persons and under the control and to the satisfaction of City Engineer or designee.

8. This Permit may be immediately revoked for reasons determined by the City Engineer or designee including violation of Permit provisions or other applicable rules and regulations, or the creation of a nuisance after notice given by the City Engineer or designee. In the event of such revocation, Permittee shall immediately cease all operations and restore City right of ways as directed by City Engineer or designee.

9. Any construction performed on City property shall be in accordance with Orange County Resources and Development Management Department's Standard Plans and established criterion and as modified by the City Engineer. Any deviation must be specifically detailed and highlighted on plans in a manner meeting the approval of the City Engineer or designee

10. No uses other than that as stated on this Permit shall be exercised. Public right of way shall not be used for administrative operations or storage of equipment, materials, supplies, etc. All administrative and storage areas shall have the written approval of the property owner. This Permit shall include any attached Special Provisions.

11. Permittee agrees that if any tank, pipe, conduit, duct, tunnel or other installation of any nature or kind placed in the public right of way for which the Permit is issued which shall at any time in the future interfere with the use, repair, improvement, widening or change of grade of the highway, the Permittee, within ten (10) days after the receipt of a written notice from the City to do so, shall at its own sole expense either relocate or remove such installations, subject to the approval of the City Engineer.

12. Permittee agrees to comply with all City's NPDES requirements (Chapter 5.10 - Water Quality Control Municipal Code). If de-watering operation within the public right of way is necessary, proper measures must be taken to prevent the transport of debris into the storm drain system. Permittee agrees to include a direct discharge into the catch basin via a hose or other method which bypasses the street surface. If this method is not feasible, placement of proper BMPs preventing any debris collected from the street surface and entering into the catch basin will be required.

13. No permit shall be approved for encroachment onto any property owned by the City for any purpose whatsoever unless the applicant provides proof of insurance coverage for bodily injury and property damage in a form and in an amount acceptable to the City Manager. In fixing the form and amount of such insurance requirement, the City Manager shall take into consideration the nature and extent of the proposed encroachment. The City Manager may waive the requirements of this section if he/she determines that the proposed encroachment will not constitute any significant possibility of City liability (Municipal Code Sec. 11.07.270 – Liability Insurance Required). The minimum insurance established pursuant to this section is listed in the Indemnity and Hold Harmless Agreement attached hereto.

INSPECTOR'S REPORT

Date Work Started _____ Inspector _____

Date Completed _____ Inspector _____

ESTIMATE OF STREET REPAIRS

(If the encroachment will disrupt/damage the street or sidewalk, complete the following)

Street Restoration: ☐ By Permittee ☐ By City Task Order # _____

A.C. Pavement _____ sq. ft. Concrete Pavement _____ sq. ft. Sidewalk _____ sq. ft.

Curb Ramp_____ea. Driveway_____ sq. ft. Curb & Gutter_____ l.f.

Curb drain_____ea. Asphalt, Concrete & Soil Removal _____ sq. ft.

Tree Removal _____ ea. Tree Planting _____ ea. Monument _____ ea.

Other _____

INSPECTION RECORD

Date	Hours	Inspector	Description
_____	_____	_____	_____
_____	_____	_____	_____
_____	_____	_____	_____
_____	_____	_____	_____
_____	_____	_____	_____
_____	_____	_____	_____
_____	_____	_____	_____

Comments: _____

_____

_____

_____

_____

COMPLETION REPORT

Final Inspection Date: _____ Approved by Inspector_____

Total Inspection Hours ☐ Signature of Inspector: _____

ADDITIONAL FEES:

Plan Check _____

Inspection _____

Reconstruction _____

Other _____

TOTAL _____

NOTES

_____

_____

_____

_____

Billing Date: _____ By: _____

☐ Completed Date _____ By _____

☐ Void Reason _____

☐ Deposit Released Date _____ _____

STATEMENT OF INTENT TO COMPLY WITH MINIMUM STORMWATER PERMIT REQUIREMENTS

Stormwater Program – **City of Rancho Santa Margarita Encroachment Permit**

Permit Number: _____ Date: _____

Applicant: _____

Project Address: _____

Property Owner: _____

Contractor: _____

Contractor's Address: _____ Phone: _____

The National Pollutant discharge Elimination System (NPDES) is an element of the Clean Water Act that applies to the protection of receiving waters. Under NPDES Municipal Separate Storm Sewer Systems (MS4s) permits from the San Diego Regional Water Quality Control Board (RWQCB), certain activities are subject to RWQCB enforcement. To meet the standards of the Orange County MS4 Permit, Order No. R9-2009-002/NPDES No. CAS0108740(MS4 Permit), the City of Rancho Santa Margarita has adopted minimum standards for stormwater runoff from construction activities and utility maintenance projects.

These minimum standards include requirements for erosion control, sediment control, and construction activity control to be implemented at each site. At a minimum, the activity associated with the project identified above shall be conducted in such a manner that:

- Sediments from disturbed soils shall be retained on site to the maximum extent practicable through the use of non-structural and/or structural sediment controls; and
- Erosion of disturbed soil shall be minimized to the maximum extent practicable through the use of soil stabilization materials and procedures; and
- All construction wastes shall be properly disposed of in such a way that no wastes are either directly or indirectly discharged to the storm drain; and
- All concrete trucks will wash out to a contained area to prevent the discharge of concrete truck rinse water from entering the storm drain.

☐ Expected dewatering of vault or underground structure
  - Provide proof of active dewatering permit

- If de-watering operation within the public right of way is necessary, proper measures must be taken to prevent the transport of debris into the storm drain system. Permittee agrees to include a direct discharge (that does not contain any illegal discharge) into the catch basin via a hose or other method which bypasses the street surface. If this method is not feasible, placement of proper BMPs preventing any debris collected from the street surface and entering into the catch basin will be required.
- If Permittee fails to install the necessary BMP's as required by the MS4 Permit the City will install all necessary BMP's and the Permittee will be responsible for reimbursing the City for all costs associated with making the project site comply with the MS4 Permit within 30 days.

I have read and understand the requirements listed above and certify that I will comply with the minimum requirements above.

Signature: _____ Title: _____

Print Name: _____

Date: _____

FOR CITY USE ONLY
Proof of active dewatering permit obtained ☐
Active through _____
Date

ENCROACHMENT PERMIT SITE SKETCH

Applicant shall attach plans to the encroachment permit illustrating work to be accomplished or at a minimum show intended work on the following street sketch.

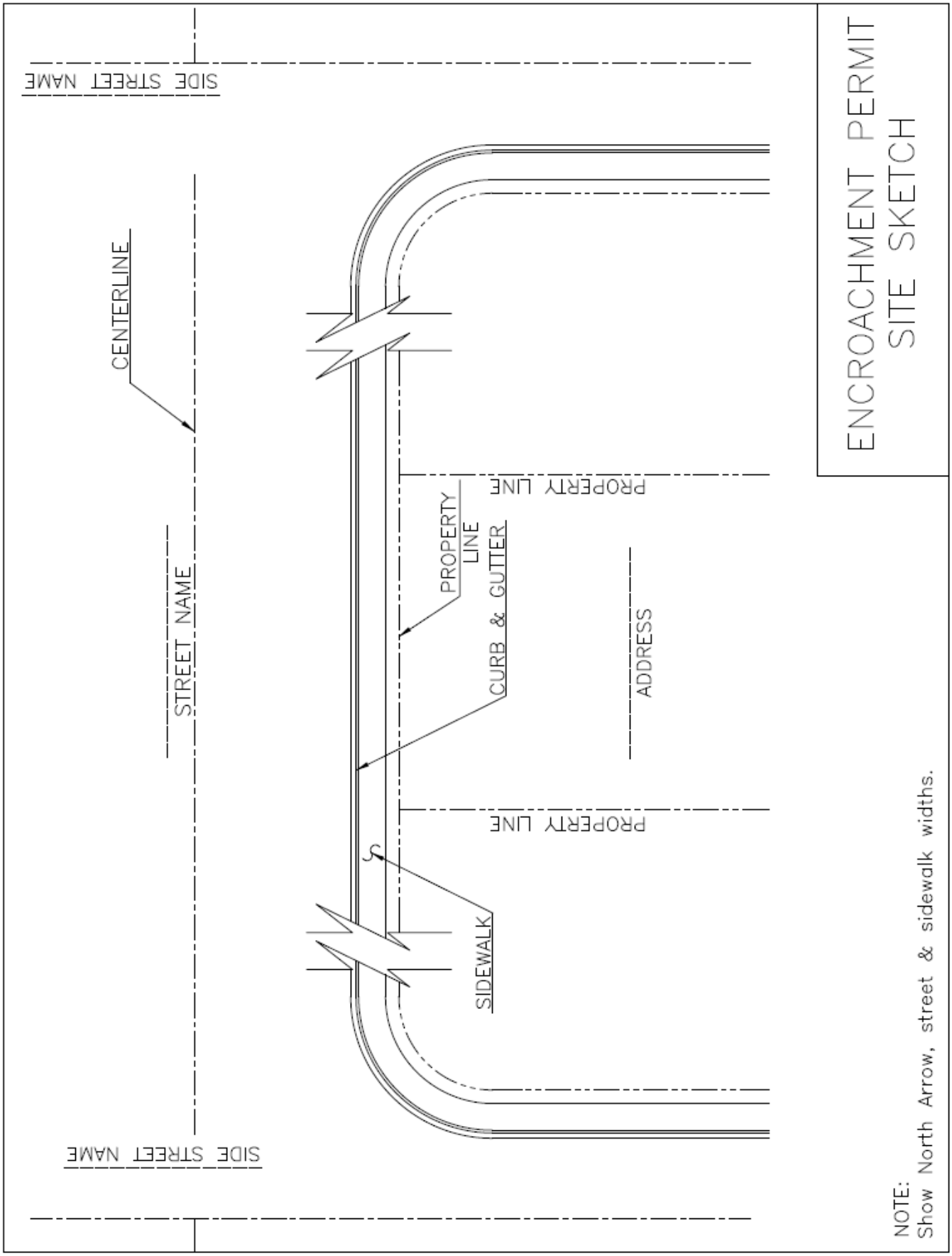

INDEMNITY AND INSURANCE REQUIREMENTS

Indemnity and Hold Harmless Agreement for Encroachment Permits

RESPONSIBILITY FOR DAMAGES: The Applicant agrees to and shall indemnify, defend, and hold the City of Rancho Santa Margarita, its officers, agents, employees, and representatives ("Indemnitees"), harmless from and against any and all loss, damage, liability, claim, demand, suit, cost, and expense whatsoever, including reasonable attorneys' fees, regardless of the merit or outcome of any such claim or suit arising from or in any manner connected with the issuance of the encroachment permit, and/or the installation, construction, maintenance, use, or operation of the work contemplated in the application for the encroachment permit, regardless of whether the Indemnitees reviewed and approved any plans or inspected any work or improvement, including the encroachment, and regardless of whether such maintenance, repair, replacement, or condition was affected or caused by the Indemnitees, except as provided by law.

INSURANCE: The permit shall not be effective for any purpose unless and until the Applicant obtains and files with the City of Rancho Santa Margarita, as the grantor of the permit, proof of an insurance policy which shall have commercial general liability limits in the amount of no less than one million dollars ($1,000,000.00) per occurrence, two million dollars ($2,000,000.00) in the general aggregate. The insurance required herein shall be provided by an authorized insurance company by the State of California and having a minimum A.M. Best's Guide Rating of A-, Class VII or better, unless such requirements are waived in writing by the City Manager or his/her designee due to unique circumstances. The City of Rancho Santa Margarita, its officers, agents and employees shall be expressly listed as additional insured under this insurance policy and the policy shall provide coverage for bodily injury and property damage. The insurance required herein shall contain a Statement of Obligation on the part of the carrier to notify the City of any material change, cancellation, or termination at least thirty (30) days in advance. For any claims related to the permit, the Applicant's insurance coverage shall be primary insurance as respects the City, its officers, agents, and employees. Any insurance or self-insurance maintained by the City, its officers, agents, and employees shall be excess of the Applicant's insurance and shall not contribute with it. The Applicant shall be responsible to keep this insurance policy in full force and effect until final completion of the work contemplated in the application for the encroachment permit. The cost of any and all premiums for this insurance policy shall be borne by the Applicant. In the event of claims against the policy, the Applicant shall be responsible for payment of any deductible amounts. A Certificate of Insurance and endorsements shall be provided to the City Engineer evidencing compliance with the requirements herein.

STATEMENT OF ACCEPTANCE OF THE CONDITIONS FOR ISSUANCE OF THE ENCROACHMENT PERMIT: I have read and understand each of the conditions set forth for issuance of this Encroachment Permit and on behalf of _____, and being duly authorized to do so I accept the encroachment permit subject to these conditions.

Signature: _____ Title: _____

Print Name: _____

Date: _____

Signature Requirements

- For Applicants/Contractors/Vendors that are a corporation, signature requirements are as follows:

  1) One signature by the Chairman of the Board, the President, of the Vice President,

  And

  2) One signature by the Secretary, any Assistant Secretary, the Chief Financial Officer or an Assistant Treasurer.

  Parties executing an Agreement or Contract that are not identified above must also send a copy of the corporate minutes giving such person(s) the authority to sign on behalf of the corporation.

- For Applicants/Contractors/Vendors that are not a corporation, signature requirements are as follows: the person who has authority to bind the Applicant/Contractor/Vendor must sign the Encroachment Permit.