

THE CITY OF NEW YORK
DEPARTMENT OF DESIGN AND CONSTRUCTION

DIVISION OF PUBLIC BUILDINGS

198 E 161ST STREET
COOLING TOWER REPLACEMENT

198 E 161ST STREET
BRONX, NY - 10451

100% CDS DRAWING SET
OCTOBER 10TH, 2025

FMS ID Number	PW77198CT
Project Title	198 E 161st Street Cooling Tower Replacement
Project Location	198 East 161st Street, Bronx NY 10451
Borough	Bronx
Sponsor Agency	DCAS

Accepted for bid purposes:

Deputy Commissioner of Public Buildings: _____ 12/3/25
Signature Date

Program Director: _____ 12/3/25
Signature Date

ARCHITECT:

NANDINEE PHOOKAN ARCHITECTS PC

45 MAIN STREET, SUITE #620,
BROOKLYN, NY 11201
P: 718 643 9500

MECHANICAL/ ELECTRICAL ENGINEER:

DEWBERRY ENGINEERS

5 PENN PLAZA, SUITE 900
NEW YORK, NY 10001
P: 646 434 2822

STRUCTURAL ENGINEER:

LERA CONSULTING STRUCTURAL ENGINEERS

40 WALL STREET, FLOOR 23
NEW YORK, NY 10005
P: 212 750 9000

PLUMBING ENGINEER:

AXON ENGINEERING SERVICES, LLC

222 OUTWATER LN, SUITE 3A
GARFIELD, NJ 07026
P: 917 677 2484

ARCHITECTURAL:

T-001.00	COVER SHEET
G-001.00	DRAWING LIST, ABBREVIATIONS, LEGENDS, ZONING/ CODES
G-100.00	CONSTRUCTION PHASING (1 OF 2)
G-101.00	CONSTRUCTION PHASING (2 OF 2)
DM-100.00	ROOF DEMOLITION PLAN, ELEVATION, & SITE PHOTOS
DM-101.00	MAIN ROOF DEMOLITION PLAN
A-100.00	SITE PLAN
A-101.00	MAIN ROOF PROPOSED PLAN
A-110.00	PENTHOUSE MER PLAN AND ELEVATION
A-200.00	BUILDING ELEVATIONS
A-201.00	ROOF ELEVATIONS
A-202.00	ROOF SECTIONS
A-301.00	ROOF DETAILS
A-302.00	ROOF DETAILS

MECHANICAL/ ELECTRICAL ENGINEER:

M-001.00	MECHANICAL SYMBOLS & ABBREVIATIONS
M-002.00	MECHANICAL GENERAL NOTES
M-003.00	MECHANICAL SCHEDULE
M-100.00	MECHANICAL COOLING TOWER DEMOLITION PLAN
M-101.00	MECHANICAL COOLING TOWER CONSTRUCTION PLAN
M-102.00	MECHANICAL COOLING TOWER SECTIONS
M-401.00	MECHANICAL RISER DIAGRAM
M-501.00	MECHANICAL DETAILS
M-601.00	MECHANICAL SEQUENCE OF OPERATION, BMS
E-001.00	ELECTRICAL GENERAL NOTES
ED-101.00	ELECTRICAL COOLING TOWER DEMOLITION PLAN
E-101.00	ELECTRICAL COOLING TOWER NEW PLAN
E-201.00	ELECTRICAL COOLING TOWER PART PLANS
E-202.00	ELECTRICAL COOLING TOWER PART PLANS
E-301.00	ELECTRICAL SINGLE-LINE DIAGRAM
E-401.00	ELECTRICAL PANEL SCHEDULE
EL-101.00	ELECTRICAL LIGHTNING PROTECTION PLAN
EL-201.00	ELECTRICAL LIGHTNING PROTECTION PLAN DETAILS

STRUCTURAL ENGINEER:

S-000.00	PROJECT INFORMATION
S-001.00	STANDARD ABBREVIATIONS
S-002.00	GENERAL STRUCTURAL NOTES
S-003.00	STRUCTURAL DESIGN CRITERIA
DMS-101.00	EXISTING MAIN ROOF/ BULKHEAD PLAN
DMS-102.00	EXISTING ROOFTOP DUNNAGE PART PLANS & ELEVATIONS
DMS-300.00	ROOFTOP DUNNAGE DEMOLITION ELEVATIONS & SECTIONS
S-102.00	ROOFTOP DUNNAGE PART PLANS & ELEVATIONS
S-300.00	ROOFTOP DUNNAGE SECTIONS
S-400.00	CONNECTIONS TYPICAL DETAILS
S-401.00	CONNECTIONS TYPICAL DETAILS
S-500.00	SECTIONS & DETAILS
S-501.00	SECTIONS & DETAILS

PLUMBING ENGINEER:

P-001.00	PLUMBING SYMBOLS, ABBREVIATIONS, & DRAWING LIST
P-100.00	PLUMBING TENTH FLOOR AND ROOF DEMOLITION PLAN
P-101.00	PLUMBING TENTH FLOOR AND ROOF CONSTRUCTION PLAN
P-401.00	PLUMBING DETAILS

DOB APPROVAL STAMP

COOLING TOWER REPLACEMENT

BRONX DISTRICT ATTORNEY'S OFFICE
198 E 161ST STREET
NEW YORK, NEW YORK 10451

SPONSOR AGENCY:
DEPARTMENT OF CITYWIDE ADMINISTRATIVE SERVICES
MANHATTAN MUNICIPAL BUILDING
ONE CENTER STREET, 17 FLOOR SOUTH;
NEW YORK, NEW YORK 10007

MANAGING AGENCY:
DEPARTMENT OF DESIGN AND CONSTRUCTION
30-30 THOMSON AVENUE;
LONG ISLAND CITY, NEW YORK 10007

ARCHITECT:
NANDINEE PHOOKAN ARCHITECT
45 MAIN STREET SUITE #620
BROOKLYN NY 11201
P: 718 643 9500

STRUCTURAL ENGINEER:
LERA CONSULTING STRUCTURAL ENGINEERS
40 WALL STREET, FLOOR 23
NEW YORK, NY 10005
P: 212 750 9000

MEP ENGINEER:
DEWBERRY ENGINEERS
132 WEST 31ST STREET, SUITE 301
NEW YORK, NEW YORK 10001
P: 646 434 2822

PLUMBING ENGINEER:
AXON ENGINEERING SERVICES, LLC
222 OUTWATER LN, SUITE 3A
GARFIELD, NJ 07026
p: 917 677 2484

KEY PLAN:

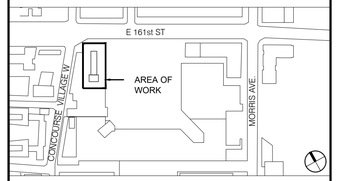

REVISIONS:

NUMBER	DESCRIPTION	DATE
	ISSUED FOR BID	01-27-2026
	ADDENDUM #4	05-19-2026

NYC DDC **Department of Design and Construction**

DIVISION OF PUBLIC BUILDINGS

CAPITAL PROJECT NUMBER:
PW77198CT
PROJECT
198 E 161ST STREET COOLING TOWER REPLACEMENT
198 E 161ST ST
BRONX, NY 10451
FOR THE:
Department of Citywide Administrative Services (DCAS)
DOB NOW APPLICATION: X01141830-I1

DRAWING TITLE:
COVER SHEET

SEAL & SIGNATURE

REGISTERED ARCHITECT
NANDINEE PHOOKAN
025226
STATE OF NEW YORK

DATE:	5 December, 2025
PROJECT NO:	22_01
DRAWN BY:	AD
CHECKED BY:	NP/AA
DRAWING NUMBER:	T-001.00
CADO FILE No:	
	00 OF 00

SYMBOL LEGEND

- WINDOW TYPE
- DOOR TYPE
- KEY NOTE
- APPLIANCE SYMBOL
- PARTITION TYPE
- WALL FIXTURE TYPE
- GRID REFERENCE
- EXTERIOR ELEVATION
- INTERIOR ELEVATION
- BUILDING SECTION
- WALL SECTION
- DETAIL SECTION
- DETAIL CALLOUT
- NORTH TO PART OF OR WHOLE OF THE DRAWING
- SCALE TO PART OF OR WHOLE OF THE DRAWING
- ELEVATION DATUM LINE
- DATUM POINT
- PLATE / PROPERTY LINE
- CENTER LINE
- DIMENSION TO FACE
- DIMENSION TO CENTER
- ALIGN
- CUT LINE
- (E) EXISTING
- REVISION TO PART OF OR WHOLE OF THE DRAWING
- WORKING POINT / STARTING POINT
- PROPERTY LINE
- SETBACK OR BOUNDARY LINES
- CENTER LINE / EXTERIOR ELEVATION
- HIDDEN, FUTURE, OR EXISTING CONST TO BE DEMOLISHED

RCP LEGEND

- ACOUSTICAL CEILING TILE
- GYPSUM BOARD CEILING OR SOFFIT
- ACCESS DOOR
- CONCEALED SPRINKLER HEAD
- RECESEED RETURN AIR GRILLE
- RECESSED SUPPLY AIR DIFFUSER
- FINISH CEILING HEIGHT
- WALL MOUNTED TELEVISION, PROVIDE BLOCKING AS REQUIRED
- SLOT LINEAR DIFFUSER (SEE MEP)
- WINDOW SHADE
- EXIT SIGN - CEILING MOUNTED
- EXIT SIGN - WALL MOUNTED
- CEILING FINISH START POINT
- CHANGE IN CEILING HEIGHT
- CEILING MTD SECURITY CAMERA
- RECESSED PROJECTION SCREEN
- RECESSED SPEAKER
- SMOKE DETECTOR
- COMBO SMOKE & CARBON MONOXIDE DETECTOR
- HEAT SENSOR

MATERIAL LEGEND

- GWB
- INSULATION, BATT
- INSULATION, RIGID
- CONCRETE
- NEW CONSTRUCTION
- EXISTING TO REMAIN (NIC)
- PLYWOOD
- WOOD, BLOCKING
- STEEL
- ACOUSTICAL TILE

ABBREVIATIONS

ACT	ACOUSTICAL CEILING TILE	HVAC	HEATING, VENTILATION & AC
ADJ	ADJACENT	IN	INCH
AFF	ABOVE FINISHED FLOOR	INST	INSTALLED
ALUM	ALUMINUM	J-BOX	JUNCTION BOX
APPROX	APPROXIMATE, APPROXIMATELY	JC	JANITORS CLOSET
B	BALCONY	JT	JOINT(S)
BD	BOARD	K	KITCHEN
BDR	BEDROOM	KD	KNOCK DOWN
BLDG	BUILDING	LAM	LAMINATE
BLKG	BLOCKING	LIN	LINEN CLOSET
BM	BEAM	LVL	LEVEL
BO	BOTTOM OF	LOC	LOCATION(S)
BOT	BOTTOM	LT	LIGHT
BR	BROOM CLOSET	MANUF	MANUFACTURER
CJ	CONTROL JOINT	MAX	MAXIMUM
CL	CLOSET	MDF	MEDIUM DENSITY FIBERBOARD
CL	CENTERLINE	MEP	MECHANICAL/ELECTRICAL/PLUMBING
CPT	CARPET	MIN	MINIMUM
CAB	CABINET (S), CABINETRY	MISC	MISCELLANEOUS
CLG	CEILING	MO	MASONRY OPENING
CLO	CLOSET	MR	MOISTURE RESISTANT
CLR	CLEAR	MTD	MOUNTED
CFL	COMPACT FLOURESCENT LIGHT	MT	METAL
CMU	CONCRETE MASONRY UNIT	N/A	NOT APPLICABLE
COL	COLUMN	NIC	NOT IN CONTRACT
CONC	CONCRETE	NO	NUMBER
CONST	CONSTRUCTION	NTS	NOT TO SCALE
CONT	CONTINUOUS	OC	ON CENTER
CTRL	CONTROL	OD	OVERFLOW DRAIN
CT	CERAMIC TILE	OPNG	OPENING
DEPT	DEPARTMENT	OPP	OPPOSITE
DTL	DETAIL	PART	PARTITION
DF	DRINKING FOUNTAIN	PLAM	PLASTIC LAMINATE
DIA	DIAMETER	PLYWD	PLYWOOD
DIFF	DIFFUSER(S)	PT	POINT
DIM	DIMENSION(S)	PTD	PAINTED
DIST	DISTANCE	RAD	RADIUS
DN	DOWN	RB	RUBBER BASE
DO	DOOR OPENING	RD	ROOF DRAIN
DR	DOOR	REF	REFERENCE
DSP	DRY STAND PIPE	REINF	REINFORCED, REINFORCING
DWG	DRAWINGS	RELOC	RELOCATED
ELEC	ELECTRICAL	REQ'D	REQUIRED
ENCL	ENCLOSURE	REV	REVISED, REVISION
EQ	EQUAL	RM	ROOM
ELEV	ELEVATION	RO	ROUGH OPENING
EP	ELECTRICAL PANEL	RP	RECESSED PANEL
EMERG	EMERGENCY	SCHED	SCHEDULE
EXP JT	EXPANSION JOINT	SECT	SECTION
EXST	EXISTING	SF	SQUARE FOOT
EXT	EXTERIOR	SHT	SHEET
FF	FINISH FLOOR	SIM	SIMILAR
FEC	FIRE EXTINGUISHER CABINET	SP	SCRIBED PANEL
FIN	FINISH, FINISHED	SQ	SQUARE
FIXT	FIXTURE	SSK	SERVICE SINK
FLR	FLOOR	SS	STAINLESS STEEL
FO	FACE OF	STL.	STEEL
FT	FIRE TREATED	STOR	STORAGE
FT	FOOT, FEET	STRUCT	STRUCTURE, STRUCTURAL
FURN	FURNISHED	SUSP	SUSPENDED
GA	GAUGE	STD	STANDARD
GALV	GALVANIZED	SV	SHEET VINYL
GC	GENERAL CONTRACTOR	TBD	TO BE DETERMINED
GL	GLASS	TEL	TELEPHONE
GWB	GYPSUM WALL BOARD	THK	THICK
HDG	HOT-DIPPED GALVANIZED	TO	TOP OF
HDWR	HARDWARE	TYP	TYPICAL
HM	HOLLOW METAL	UON	UNLESS OTHERWISE NOTED
HO	HOLD OPEN DEVICE	VB	VINYL BASE
HORIZ	HORIZONTAL	VCT	VINYL COMPOSITION TILES
HT	HEIGHT	VIF	VERIFY IN FIELD
HWT	HOT WATER TANK	W/O	WITHOUT
HR	HOUR	WC	WATER CLOSET
HRD	HANG ROD	WD	WOOD

FEMA MAP

THE SITE IS NOT IN A FLOOD ZONE. IT IS LOCATED IN ZONE X "AREA DETERMINED TO BE OUTSIDE FHT 0.2% ANNUAL CHANCE FLOOD PLAIN"

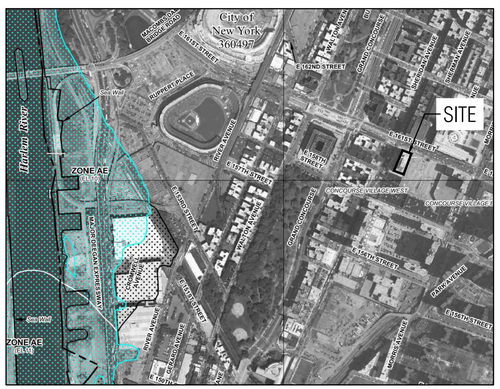



BLDG. DEPT. NOTES

1. ALL REFERENCES TO THE "BUILDING CODE" OR "THE CODE" SHALL REFER TO THE BUILDING CODE OF THE CITY OF NEW YORK LATEST EDITION UNLESS OTHERWISE STATED.
2. COMPLY WITH ALL REQUIREMENTS OF NEW YORK CITY BUILDING CODES, STATE LABOR LAW, AND ALL REGULATIONS OF NEW YORK CITY AND STATE. ALL PERMITS SHALL BE PROPERLY DISPLAYED.
3. MEANS OF EGRESS SHALL BE KEPT UNOBSTRUCTED AT ALL TIMES.
4. ALL CONSTRUCTION TO BE IN ACCORDANCE WITH THE RULES AND REGULATIONS OF THE NEW YORK CITY BUILDING CODE. ALL ASSEMBLIES AND EQUIPMENT TO BE AS ACCEPTED BY THE N.Y.C. BOARD OF STANDARD AND APPEALS. MECHANICAL EQUIPMENT TO BE MEA APPROVED.
5. MATERIALS, ASSEMBLIES, FORMS AND METHODS OF CONSTRUCTION - CODE TEST METHOD. WHENEVER THE BUILDING CODE PRESCRIBES A METHOD FOR TESTING ANY MATERIAL, THE MATERIAL SHALL BE TESTED (A) UNDER THE DIRECTION OF AN ARCHITECT OR ENGINEER, OR (B) BY A TESTING SERVICE OR LABORATORY ACCEPTABLE TO THE COMMISSIONER.
6. DOORS AND ASSEMBLIES SHALL HAVE FIRE-RESISTIVE RATINGS PER NYC BUILDING CODE. ALL FIRE RATED DOORS SHALL BEAR A LABEL INDICATING SAME TYPE AS APPROVED BY BOARD OF STANDARD AND APPEALS OR M.E.A.
7. ALL FIRE STOPPING AT PENETRATIONS IN FIRE RATED FLOOR AND WALL SEPARATIONS SHALL BE THERMAFIBER (U.S. GYPSUM) MINERAL FIBER RATED AT ONE (1), TWO (2), OR THREE (3) HOURS (AS REQUIRED). BSA CAL #39-74 SM OR APPROVED EQUIVALENT.
8. PROJECT SHALL COMPLY WITH LOCAL LAW 58/87 AND ADA ACCESSIBILITY GUIDELINES.
9. EGRESS PROVISIONS TO COMPLY WITH CHAPTER 10 OF THE NYC BUILDING CODE.
10. ALL HARDWARE SHALL CONFORM WITH CHAPTER 11 OF THE NYC BUILDING CODE AND THE 2010 ADA STANDARDS FOR ACCESSIBLE DESIGN.
11. ALL COLUMNS, BEAMS, AND UNDERSIDE OF METAL DECKING TO BE PROVIDED WITH EQUAL OR GREATER THAN 1 HOUR SPRAY-ON FIREPROOFING UNO.
12. NO CHANGE IN USE OR OCCUPANCY OR EGRESS.
13. ALL CONSTRUCTION WORK SHALL BE DONE IN ACCORDANCE WITH THE REQUIREMENTS OF THE NEW YORK CITY BUILDING CODE EFFECTIVE DECEMBER 6, 1968 AS AMENDED AND ALL OTHER APPLICABLE LAWS.
14. THE PROVISIONS OF THE NEW YORK CITY BUILDING CODE SHALL GOVERN THE CONDUCT OF ALL CONSTRUCTION AND DEMOLITION OPERATIONS WITH REGARD TO THE SAFETY OF THE PUBLIC AND PROPERTY.
15. ALL INTERIOR FINISHES SHALL HAVE A FLAME SPREAD RATING AND SMOKE DEVELOPED RATING NOT GREATER THAN THAT NOTED IN CHAPTER 7 OF THE BUILDING CODE NOR BE MORE TOXIC THAN THAT DESCRIBED THEREIN.
16. VERIFY ALL CONDITIONS AND DIMENSIONS SHOWN ON THE PLAN AT THE JOB SITE BEFORE COMMENCING ANY WORK.
17. NO WORK AT SITE TO COMMENCE UNTIL PLAN HAS BEEN APPROVED AND PERMIT ISSUED BY THE DEPARTMENT OF BUILDINGS.

GENERAL NOTES

1. ALL WORK AND MATERIALS FURNISHED SHALL COMPLY WITH THE CITY OF NEW YORK BUILDING CODE, THE CITY OF NEW YORK FIRE CODE, THE STATE OF NEW YORK REGULATIONS, THE REGULATIONS OF THE NATIONAL BOARD OF FIRE UNDERWRITERS, NATIONAL FIRE PROTECTIVE ASSOCIATION REQUIREMENTS AND THE FEDERAL, STATE AND MUNICIPAL AUTHORITIES HAVING JURISDICTION OVER THE WORK.
2. THE BUILDING PERMIT SHALL BE SECURED AND POSTED PRIOR TO THE COMMENCEMENT OF CONSTRUCTION, AS SHALL ALL OTHER PERMITS AND APPROVALS AS REQUIRED BY LAW FOR THE COMPLETION OF THE WORK.
3. PERFORM A CAREFUL AND THOROUGH EXAMINATION OF THE PREMISES FOR LABOR, MATERIALS OR EQUIPMENT REQUIRED OR FOR DIFFICULTIES ENCOUNTERED. CHECK AND VERIFY ALL QUANTITIES, WORK AND MATERIALS INVOLVED .
4. BEFORE ORDERING ANY MATERIALS OR DOING ANY WORK, EACH TRADE SHALL VERIFY ALL MEASUREMENTS AT THE BUILDING AND SHALL BE RESPONSIBLE FOR THE CORRECTNESS OF SAME, NO EXTRA CHARGE OR COMPENSATION WILL BE ALLOWED ON ACCOUNT OF DIFFERENCE BETWEEN ACTUAL DIMENSIONS AND THE MEASUREMENTS INDICATED ON THE DRAWINGS: ANY DISCREPANCIES BETWEEN THE DRAWINGS AND FIELD CONDITIONS WHICH MAY BE FOUND SHALL BE SUBMITTED TO THE COMMISSIONER FOR CONSIDERATION AND CLARIFICATION BEFORE PROCEEDING WITH THE WORK.
5. ALL OF THE DRAWINGS AND CONSTRUCTION NOTES ARE COMPLEMENTARY AND WHAT IS CALLED FOR BY EITHER WILL BE BINDING AS IS CALLED FOR BY ALL: ANY WORK SHOWN OR REFERRED TO ON ANY ONE DRAWING SHALL BE PROVIDED AS THOUGH SHOWN ON ALL DRAWINGS, WHENEVER AN ITEM IS SPECIFIED AND / OR SHOWN ON THE DRAWINGS BY DETAIL OR REFERENCE IT SHALL BE CONSIDERED TYPICAL FOR OTHER ITEMS WHICH ARE OBVIOUSLY INTENDED TO BE THE SAME EVEN THOUGH NOT SO DESIGNATED OR SPECIFICALLY NAMED BUT DO SERVE THE SAME FUNCTION.
6. THE WORK TO BE PERFORMED CONSISTS OF FURNISHING ALL LABOR EQUIPMENT, TOOLS, TRANSPORTATION, SUPPLIES, FEES, MATERIALS, AND SERVICES IN ACCORDANCE WITH THESE NOTES AND DRAWINGS AND PERFORMING ALL OPERATIONS NECESSARY TO CONSTRUCT AND INSTALL COMPLETE AND IN SATISFACTORY CONDITION THE VARIOUS MATERIALS AND EQUIPMENT AT THE LOCATIONS SHOWN, AND IN CONFORMITY WITH THE DIMENSIONS, DESIGN AND DETAILS SHOWN. IT IS INTENDED THAT THE DRAWINGS INCLUDE EVERYTHING REQUISITE AND NECESSARY TO FINISH THE ENTIRE WORK PROPERLY, NOTWITHSTANDING THE FACT THAT EVERY ITEM NECESSARILY INVOLVED MAY NOT BE SPECIFICALLY MENTIONED OR SHOWN. ANY ITEM WHICH MAY BE REASONABLY CONSTRUED AS INCIDENTAL TO THE PROPER AND SATISFACTORY COMPLETION OF THE WORK IN ACCORDANCE WITH THE INTENT OF THESE NOTES AND DRAWINGS IS HEREBY INCLUDED.
7. ABIDE BY AND COMPLY WITH TRUE INTENT AND MEANING OF THE DRAWINGS AND NOTES TAKEN AS A WHOLE. SHOULD ANY ERROR OR DISCREPANCY APPEAR OR ANY DOUBT ARISE AS TO THE TRUE MEANING OF THE DRAWINGS OR NOTES, THE ITEMS SHALL BE BROUGHT TO THE ATTENTION OF THE COMMISSIONER BEFORE SUBMISSION OF PROPOSAL FOR EXPLANATION OR CORRECTION OF SAME, AFTER THE SUBMISSION OF PROPOSAL.
8. THE STANDARD SPECIFICATIONS OF THE MANUFACTURES APPROVED FOR USE IN THE PROJECT ARE HEREBY MADE A PART OF THESE NOTES WITH THE SAME FORCE AND EFFECT AS THOUGH HEREIN WRITTEN OUT IN FULL, EXCEPT THAT WHEREVER THE DRAWINGS REQUIRE HEAVIER MEMBERS, BETTER QUALITY MATERIALS OR ARE OTHERWISE MORE STRINGENT, THERE MORE STRINGENT REQUIREMENTS SHALL GOVERN.
9. COORDINATE AND SUPERVISE THE WORK AND PROVIDE PLANS OR DETAILS AS MAY BE REQUIRED FOR THE PROPER INSTALLATION AND COMPLETION OF THE WORK. ALL MATERIALS SHALL BE ORDERED SUFFICIENTLY AHEAD OF TIME SO THAT WORK CAN PROCEED IN SCHEDULE. NO SUBSTITUTIONS WILL BE ACCEPTED BECAUSE OF FAILURE TO DO SO.
10. SUBMIT ALL FABRICATION SHOP DRAWINGS, SAMPLES, AND FIXTURE CUTS FOR THE COMMISSIONER'S REVIEW AS REQUIRED AND/OR INDICATED ON THE DRAWINGS. COORDINATE ALL TRADES AND TO CHECK QUANTITIES AND DIMENSIONS AGAINST CONDITIONS IN THE FIELD.
11. ALL MATERIALS REQUIRED FOR THE PERFORMANCE OF THIS CONTRACT SHALL BE NEW AND OF THE BEST QUALITY OF KINDS SPECIFIED, ALL SUBJECT TO THE APPROVAL OF THE COMMISSIONER. MATERIALS SHALL BE USED IN ACCORDANCE WITH MANUFACTURER'S INSTRUCTIONS.
12. FOR THE EXECUTION OF THE WORK TO BE PERFORMED UNDER THIS CONTRACT AND FOR THE MANUFACTURE OR TRANSPORTATION OF ANY OF THE MATERIALS OR APPLIANCES TO BE USED OR INSTALLED, EMPLOY ONLY SUCH LABOR THROUGHOUT AS WILL NOT INTERFERE WITH THE SPEEDY AND UNINTERRUPTED COMPLETION OF THE PROJECT. ALL WORK SHALL BE DONE BY MECHANICS SKILLED IN THEIR TRADE AND SHALL BE INSTALLED IN A NEAT AND WORKMANLIKE MANNER IN ACCORDANCE WITH THE BEST TRADE PRACTICES.
13. ANY MATERIALS DELIVERED, OR WORK PERFORMED, CONTRARY TO THE DRAWINGS AND SPECIFICATIONS AND APPROVED SHOP DRAWINGS SHALL BE REMOVED AND THE SAME SHALL BE REPLACED WITH OTHER MATERIALS OR WORK SATISFACTORY TO THE COMMISSIONER.
14. PROPERLY AND ACCURATELY LAYING OUT THE WORK FOR THE LINES AND MEASUREMENTS HEREIN, THERE SHALL BE ESTABLISHED NECESSARY REFERENCE LINES AND PERMANENT BENCH MARKS FROM WHICH BUILDING LINES AND ELEVATIONS, HEIGHTS OF ALL WORK CALLED FOR (A.F.S.) INCLUDING BUT NOT LIMITED TO SOFFITS, CEILINGS, DOORS AND FRAMES SHALL BE TRUE AND LEVEL WITHIN A MAXIMUM TOLERANCE OF 1/8" INCH OVERALL.
15. THE PREMISES AND THE JOB SITE SHALL BE MAINTAINED IN REASONABLY NEAT AND ORDERLY CONDITION AND KEPT FREE FROM ACCUMULATIONS OF WASTE MATERIALS AND RUBBISH DURING THE ENTIRE CONSTRUCTION PERIOD. REMOVE CRATES, CARTONS AND OTHER FLAMMABLE WASTE MATERIALS OR TRASH FROM THE WORK AREA AT THE END OF EACH WORKING DAY.
16. ELECTRICAL CLOSETS, PIPE AND DUCT SHAFTS, CHASES, FURRED SPACES AND SIMILAR SPACES WHICH ARE GENERALLY UNFINISHED SHALL BE CLEANED AND LEFT FREE FROM RUBBISH, LOOSE PLASTER, MORTAR DROPPINGS, EXTRANEOUS CONSTRUCTION MATERIALS, DIRT AND DUST.
17. CARE SHALL TAKE BY WORKERS NOT TO MARK, SOIL OR OTHERWISE DEFACE FINISHED SURFACES, IN THE EVENT THAT FURNISHED SURFACES BECOME DEFACED, CLEAN AND RESTORE SUCH SURFACES TO THEIR ORIGINAL CONDITION.
18. CLEAN UP IMMEDIATELY UPON COMPLETION OF EACH TRADE'S WORK.
19. CLEAN AREAS OF THE BUILDING IN WHICH PAINTING AND FINISHING WORK IS TO BE PERFORMED JUST PRIOR TO THE START OF THE WORK AND MAINTAIN THESE AREAS IN SATISFACTORY CONDITION FOR PAINTING AND FINISHING.
20. DO ALL OTHER CLEANING AS REQUIRED TO TURN THE PREMISES OVER TO THE CITY OF NEW YORK IN A SPOTLESS AND ORDERLY CONDITION.
21. KEEP THE COMMISSIONER INFORMED OF THE PROGRESS OF HIS WORK. NO WORK SHALL BE CLOSED OR COVERED UNTIL IT HAS BEEN DULY INSPECTED AND APPROVED. SHOULD UNINSPECTED WORK BE COVERED , UNCOVER ALL SUCH WORK SO THAT IT CAN BE PROPERLY INSPECTED AND AFTER SUCH INSPECTION PROPERLY REPAIR AND REPLACE ALL WORK INTERFERED WITH.
22. ALL WORK SHALL BE SUBJECT TO FINAL INSPECTION BY COMMISSIONER AND ACCEPTANCE BY THE CITY OF NEW YORK.
23. ALL SUCH MATERIALS OR PROCEDURES DESIGNATED FOR "CONTROLLED INSPECTIONS", SHALL BE INSPECTED BY THE COMMISSIONER RETAINED BY THE CITY OF NEW YORK. THIS COMMISSIONER SHALL FILE COPIES OF ALL REQUIRED INSPECTIONS TOGETHER WITH HIS SIGNED STATEMENT THAT THE WORK COMPLIES AS REQUIRED.

DRAWING INDEX

ARCHITECTURAL

		SD/DD	75% CD	DOB FILING	100% CD		
T-001.00	COVER SHEET	○	●	○	●	○	○
G-001.00	DRAWING LIST, ABBREVIATIONS, LEGENDS, ZONING/ CODES	●	●	●	●	○	○
G-100.00	CONSTRUCTION PHASING (1 OF 2)	○	●	○	●	○	○
G-101.00	CONSTRUCTION PHASING (2 OF 2)	○	●	○	●	○	○
DM-100.00	ROOF DEMOLITION PLAN, ELEVATION, & SITE PHOTOS	○	●	●	●	○	○
DM-101.00	MAIN ROOF DEMOLITION PLAN	●	●	●	●	○	○
A-100.00	SITE PLAN	●	●	○	●	○	○
A-101.00	MAIN ROOF PROPOSED PLAN	●	●	●	●	○	○
A-110.00	PENTHOUSE MER PLAN AND ELEVATION	○	○	○	●	○	○
A-200.00	BUILDING ELEVATIONS	○	●	○	●	○	○
A-201.00	ROOF ELEVATIONS	●	●	●	●	○	○
A-202.00	ROOF SECTIONS	○	●	●	●	○	○
A-301.00	ROOF DETAILS	●	●	●	●	○	○
A-302.00	ROOF DETAILS	●	●	●	●	○	○
TOTAL		6	14	8	14		

ZONING AND BUILDING INFORMATION

APPLICABLE CODES AND REGULATIONS:

- ZONING REGULATIONS: NYC ZONING REGULATIONS
- BUILDING CODE: 2022 NYC BUILDING CODE
- ENERGY CODE: 2020 NYC ENERGY CONSERVATION CODE

BUILDING DATA SUMMARY:

BLOCK / LOT:	2443 / 94	LOT AREA / BUILDING AREA:	36,219 SF / 233,647 SF
ZONING DISTRICT:	C6-2	BUILDING HEIGHT / NO OF STORIES:	147' / 10 + CELLAR, SUB CELLAR
COMMUNITY BOARD:	BRONX 04	OCCUPANCY CLASSIFICATION:	B, BUSINESS (2022 CODE)
FLOOD ZONE:	NOT APPLICABLE	CONSTRUCTION CLASSIFICATION:	I-B (NON COMBUSTIBLE)
		DEP GREEN INFRASTRUCTURE:	CITYWIDE OR OPEN WATERS

SCOPE OF WORK

THE 10 STORY BUILDING, LOCATED ON 198 E 161ST STREET IN BRONX, NY, IS OWNED BY THE NEW YORK CITY DEPARTMENT OF CITYWIDE ADMINISTRATIVE SERVICES (DCAS) AND HOUSES THE OFFICES OF THE BRONX DISTRICT ATTORNEY. THE ROOF BULKHEAD CONSISTS OF THE ELEVATOR MACHINE ROOM, A MECHANICAL EQUIPMENT ROOM HOUSING TWO BOILERS, COMPRESSORS AND PUMPS. THE TWO COOLING TOWERS ARE LOCATED ON THE ROOF ON STEEL DUNNAGE, ENCLOSED ON ALL THREE SIDES BY A SCREEN ENCLOSURE. THE PROJECT CONSISTS OF THE PHASED REPLACEMENT OF THE EXISTING 2 CELL OPEN COOLING TOWER WITH A NEW 2 CELL CLOSED LOOP COOLING TOWER AND ASSOCIATED PUMPS. THE CLOSED LOOP COOLING TOWER WILL REQUIRE ADDITIONAL ELECTRICAL SCOPE, NEW STRUCTURAL AND ARCHITECTURAL WORK TO SUPPORT THE NEW COOLING TOWER.

SPECIAL AND PROGRESS INSPECTIONS

SPECIAL INSPECTIONS		PROGRESS INSPECTIONS	
1705.14	SPRAYED FIRE-RESISTANT MATERIALS	110.3.4	FIRE-RESISTANCE RATED CONSTRUCTION
1705.17	FIRE-RESISTANT PENETRATIONS AND JOINTS	110.5	FINAL

*** MASONRY WORK EXEMPT FROM INSPECTION AS PER 2022BC 1705.4 EXCEPTION 2 ***

RELATED APPLICATIONS

STRUCTURAL: X01141830-S1 MECHANICAL: X01141830-S2 PLUMBING: X01141830-S3

SITE RESTRICTIONS

1. PUBLIC STREETS ADJACENT TO THE PROJECT SITE OPERATE UNDER NYC DEPARTMENT OF TRANSPORTATION (DOT) RESTRICTIONS WILL REMAIN IN EFFECT DURING CONSTRUCTION. PLEASE BE ADVISED THAT THE STREET FRONTAGE ALONG EAST 161ST STREET DOES NOT PERMIT STANDING OR PARKING. THE STREET FRONTAGE ON CONCOURSE VILLAGE WEST IS RESERVED FOR THE DISTRICT ATTORNEY OFFICE REPRESENTATIVE USE MONDAY THROUGH FRIDAY FROM 7AM TO 7PM. FOR THE DURATION OF THE PROJECT, THE CONTRACTOR CANNOT USE STREET FRONTAGES RESERVED FOR DISTRICT ATTORNEY PARKING FOR ANY CONSTRUCTION-RELATED PURPOSES, INCLUDING BUT NOT LIMITED TO TRAILER SET-UP, STORAGE AND STAGING OF MATERIALS AND EQUIPMENT, ETC..
2. THE CONTRACTOR WILL BE RESPONSIBLE TO FILE MODIFICATION REQUESTS TO THE EXISTING TRAFFIC STIPULATIONS WITH THE NYC DOT'S OFFICE OF CONSTRUCTION MITIGATION AND COORDINATION (OCMC) IF THE PROJECT HAS ANY MATERIAL AND EQUIPMENT DELIVERIES THAT MAY REQUIRE STREET CLOSURE OR MAY IMPACT STREET PARKING ALONG EAST 161ST STREET OR CONCOURSE VILLAGE WEST. HOWEVER, THE CONTRACTOR MAY ONLY FILE SUCH STREET CLOSURE OR MODIFICATION REQUESTS TO BE SCHEDULED FOR SATURDAY AND SUNDAY ONLY, WITH NO IMPACT TO DISTRICT ATTORNEY RESERVED PARKING DURING WEEKDAYS FROM MONDAY THROUGH FRIDAY.
3. DDC WILL NOT PERMIT ANY DEVIATION FROM THE ABOVE-MENTIONED RESTRICTIONS WITHOUT PRIOR WRITTEN APPROVAL FROM ALL GOVERNMENT STAKEHOLDERS, INCLUDING BUT NOT LIMITED TO: DDC, NYC DOT OCMC AND THE DISTRICT ATTORNEY'S OFFICE.

TEMPORARY COOLING

1. THE BUILDING WILL REMAIN OCCUPIED DURING CONSTRUCTION AND WILL REQUIRE YEAR-ROUND COOLING. THE INTERIOR CONDITIONS OF THE BUILDING SERVED BY THE EXISTING COOLING TOWERS ARE NOT TO EXCEED 75 DEGREES FAHRENHEIT AND 50% PERCENT RELATIVE HUMIDITY DURING OCCUPIED HOURS AND 85 DEGREES FAHRENHEIT AND 50% RELATIVE HUMIDITY DURING UNOCCUPIED HOURS.
2. PEAK COOLING LOAD FOR THE BUILDING'S EXISTING COOLING TOWERS IS 800 TONS.
3. THE CONTRACTOR WILL BE RESPONSIBLE FOR PROVIDING TEMPORARY COOLING AS NEEDED DURING CONSTRUCTION BASED ON THE SEASONAL COOLING LOADS AND AVAILABILITY OF THE EXISTING OR NEW COOLING TOWERS. THE MINIMUM COOLING CAPACITY TO BE PROVIDED FOR THE BUILDING BETWEEN OCTOBER 1ST AND MAY 15TH IS 400 TONS AND THE MINIMUM COOLING CAPACITY TO BE PROVIDED FOR THE BUILDING BETWEEN MAY 16TH AND SEPTEMBER 30TH (SUMMER) IS 800 TONS. SHORT DURATION INTERRUPTIONS OF THESE REQUIREMENTS SHALL BE PERMITTED ONLY AS NECESSARY FOR CUTOVER AND FINAL CONNECTION BETWEEN EXISTING AND NEWLY INSTALLED SYSTEMS AND EQUIPMENT DURING UNOCCUPIED HOURS AND WITH APPROVAL AND COORDINATION WITH THE COMMISSIONER.
4. THE CONTRACTOR WILL PREPARE AND SUBMIT A TEMPORARY COOLING PLAN TO THE COMMISSIONER FOR REVIEW AND APPROVAL PRIOR TO DECOMMISSIONING THE EXISTING OPEN-LOOP COOLING TOWERS. THE TEMPORARY COOLING PLAN WILL INCLUDE:
   a. SELECTION OF HVAC EQUIPMENT AND DISTRIBUTION.
   b. A MEMO INDICATING THE REQUIRED COOLING LOADS AND COOLING CAPACITY OF THE EQUIPMENT SIGNED AND SEALED BY A NYS LICENSED ENGINEER RETAINED BY THE CONTRACTOR.
   c. ANY POINTS OF CONNECTION TO THE EXISTING HVAC SYSTEM, AS WELL AS ANTICIPATED SYSTEM SHUTDOWNS REQUIRED TO INSTALL AND CONNECT TEMPORARY COOLING.
   d. A SKETCH PLAN INDICATING THE WEIGHT OF EQUIPMENT AND ANY TEMPORARY STRUCTURAL SUPPORT REQUIRED FOR TEMPORARY COOLING. THE SKETCH IS TO BE PREPARED, SIGNED AND SEALED BY A NYS LICENSED ENGINEER RETAINED BY THE CONTRACTOR.

DOB APPROVAL STAMP

COOLING TOWER REPLACEMENT

BRONX DISTRICT ATTORNEY'S OFFICE
198 E 161ST STREET
NEW YORK, NEW YORK 10451

SPONSOR AGENCY:
DEPARTMENT OF CITYWIDE ADMINISTRATIVE SERVICES
MANHATTAN MUNICIPAL BUILDING
ONE CENTER STREET, 17 FLOOR SOUTH;
NEW YORK, NEW YORK 10007

MANAGING AGENCY:
DEPARTMENT OF DESIGN AND CONSTRUCTION
30-30 THOMSON AVENUE;
LONG ISLAND CITY, NEW YORK 10007

ARCHITECT:
NANDINEE PHOOKAN ARCHITECT
45 MAIN STREET SUITE #620
BROOKLYN NY 11201
P: 718 643 9500

STRUCTURAL ENGINEER:
LERA CONSULTING STRUCTURAL ENGINEERS
40 WALL STREET, FLOOR 23
NEW YORK, NY 10005
P: 212 750 9000

MEP ENGINEER:
DEWBERRY ENGINEERS
132 WEST 31ST STREET, SUITE 301
NEW YORK, NEW YORK 10001
P: 646 434 2822

PLUMBING ENGINEER:
AXON ENGINEERING SERVICES, LLC
222 OUTWATER LN, SUITE 3A
GARFIELD, NJ 07026
p: 917 677 2484

KEY PLAN:

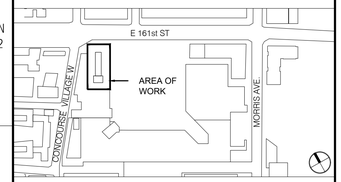

REVISIONS:

NUMBER	DESCRIPTION	DATE
	ISSUED FOR BID	01-27-2026
	ADDENDUM #3	05-12-2026

Department of Design and Construction

DIVISION OF PUBLIC BUILDINGS

CAPITAL PROJECT NUMBER:
PW77198CT

PROJECT
198 E 161ST STREET COOLING TOWER REPLACEMENT
198 E 161ST ST
BRONX, NY 10451

FOR THE:
Department of Citywide Administrative Services (DCAS)

DOB NOW APPLICATION: X01141830-I1

DRAWING TITLE:
DRAWING LIST, ABBREVIATIONS, LEGENDS, ZONING/CODES

SEAL & SIGNATURE



DATE:	5 December, 2025
PROJECT NO:	22_01
DRAWN BY:	AD
CHECKED BY:	NP/AA
DRAWING NUMBER:	G-001.00
CADO FILE No:	
	00 OF 00

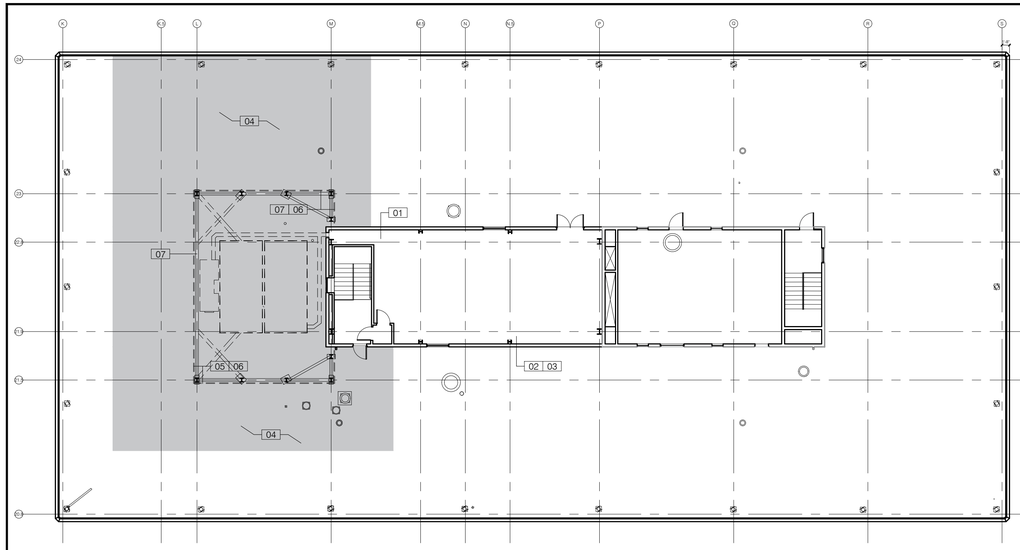

CONSTRUCTION PHASE 1 - ± 4 WEEKS	
01	DISCONNECT, RELOCATE AND RECONNECT HOT WATER HEATER, SINK AND EMERGENCY EYE WASH STATION.
02	RUN NEW ELECTRICAL FROM SUB-CELLAR TO PENTHOUSE.
03	INSTALL AND ENERGIZE PANEL BOARDS AND SERVICE SWITCHES.
04	PROVIDE ROOF PROTECTION.
05	REMOVE SCREEN WALL LIGHTNING PROTECTION AIR TERMINALS AND REROUTE CABLING TO MAINTAIN CONTINUITY.
06	REMOVE ALUMINUM SCREEN AT ALL ENCLOSURE WALLS.
07	REMOVE STRUCTURAL STEEL FRAMING FOR SOUTH ENCLOSURE WALL ABOVE MAIN LEVEL OF DUNNAGE BEAMS.

01 CONSTRUCTION PHASE 1

SCALE: 1/16"=1'-0"

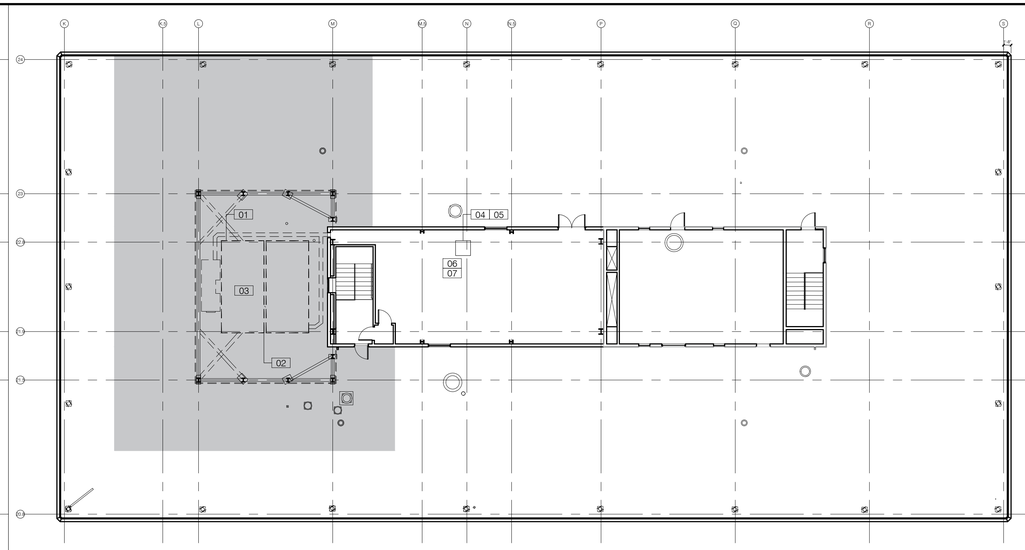

CONSTRUCTION PHASE 2 - ± 8 WEEKS (COMPLETED DURING WINTER MONTHS)	
01	DISCONNECT UTILITIES FROM EXISTING SOUTH COOLING TOWER, INCLUDING BUT NOT LIMITED TO ELECTRICAL POWER, CONDENSER WATER, MAKE UP WATER, AND EQUALIZING LINES.
02	REMOVE SOUTH TOWER LIGHTNING PROTECTION AIR TERMINALS AND REROUTE CABLING TO MAINTAIN CONTINUITY
03	DECOMMISSION AND DISASSEMBLE EXISTING SOUTH COOLING TOWER
04	KEEP ONE PUMP (EX CWP-3) OPERATIONAL. DISCONNECT POWER, CONDENSER WATER PIPING, CONTROLS, AND REMOVE TWO PUMPS. INSTALL HEAT TRACE ON EXISTING PIPING TO REMAIN.
05	CONFIRM CONDENSER WATER SYSTEM IS OPERATIONAL WITH ONE COOLING TOWER AND ONE PUMP.
06	REPROGRAM AS NECESSARY TO ACHIEVE TEMPORARY CONTROL OF CONDENSER WATER SYSTEM.
07	CONFIRM AIR HANDLING UNIT CONTROLS OPERATE ON WATER SIDE ECONOMIZER. GPMS WILL BE CONFIRMED AND THE SYSTEM WILL BE BALANCED FOR 1 PUMP OPERATION IN THIS PHASE. THE PUMP THAT WAS DISCONNECTED WILL BE KEPT ON SITE FOR EMERGENCY SWAP OUT.

02 CONSTRUCTION PHASE 2

SCALE: 1/16"=1'-0"

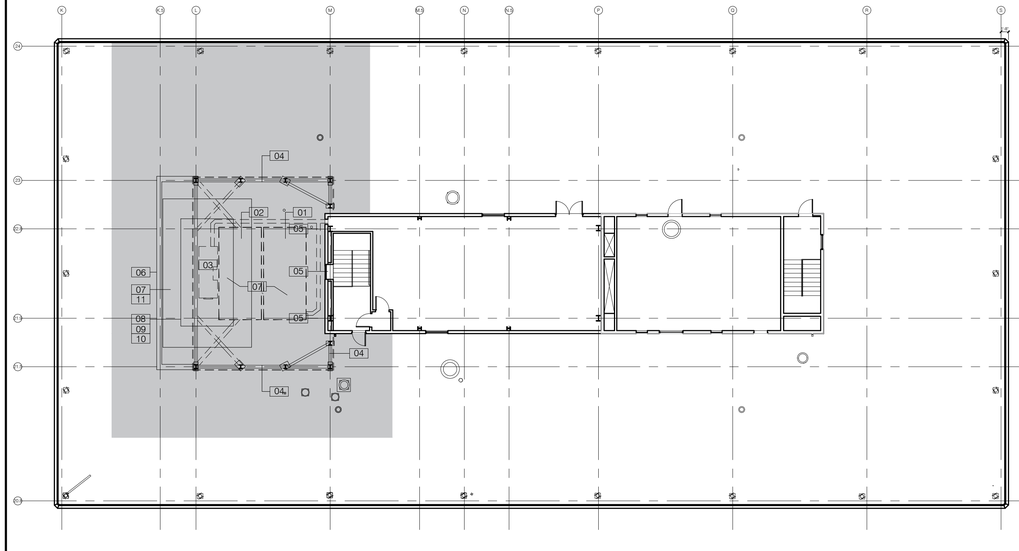

CONSTRUCTION PHASE 3 - ± 10 WEEKS	
01	INSTALL SHORING AS NEEDED WITHIN THE EXISTING DUNNAGE BELOW NORTH TOWER, TO REMAIN IN PLACE.
02	CUT AND REMOVE UPPER TWO LAYERS OF EXISTING STEEL DUNNAGE BEAMS AND VIBRATION ISOLATORS BELOW DISMANTLED SOUTH COOLING TOWER DOWN TO LOWER AND MAIN DUNNAGE BEAMS.
03	REMOVE ACCESS PLATFORM, GRATING AND ACCESS LADDER ADJACENT TO SOUTH COOLING TOWER. NORTH COOLING TOWER TO REMAIN IN PLACE.
04	REMOVE EXISTING PAINT AND CORROSION, AND REPAINT WITH ZINC-RICH PRIMER, THE EXISTING STEEL DUNNAGE AND SCREEN WALL FRAMING AND CONNECTIONS TO REMAIN.
05	PERFORM SELECTIVE DEMOLITION ON PENTHOUSE SOUTH WALL TO ALLOW FOR STEEL INSTALLATION. REPLACE EXISTING LOUVER/DAMPER.
06	INSTALL NEW STEEL FRAMING TO REINFORCE AND EXTEND EXISTING DUNNAGE PLATFORM SOUTH TO CREATE A NEW SOUTH SCREEN WALL.
07	INSTALL NEW STEEL BEAMS FOR UPPER ACCESS PLATFORM AND SUPPORT OF THE NEW SOUTH COOLING TOWER.
08	DELIVER AND RIG TO ROOF NEW CLOSED-CELL SOUTH COOLING TOWER. INSTALLATION WILL INCLUDE A STEEL SUB-FRAME, THE VIBRATION ISOLATION ELEMENTS, AND CLOSED LOOP PIPING OUTSIDE.
09	PROVIDE ELECTRICAL POWER CONNECTIONS TO INSTALLED SOUTH COOLING TOWER.
10	INSTALL NEW LIGHTNING PROTECTION AIR TERMINALS AT SOUTH COOLING TOWER.
11	INSTALL BAR GRATING, RAILINGS, ACCESS LADDER AND SWING GATE FOR SERVICE PLATFORM AROUND NEW SOUTH COOLING TOWER.

03 CONSTRUCTION PHASE 3

SCALE: 1/16"=1'-0"

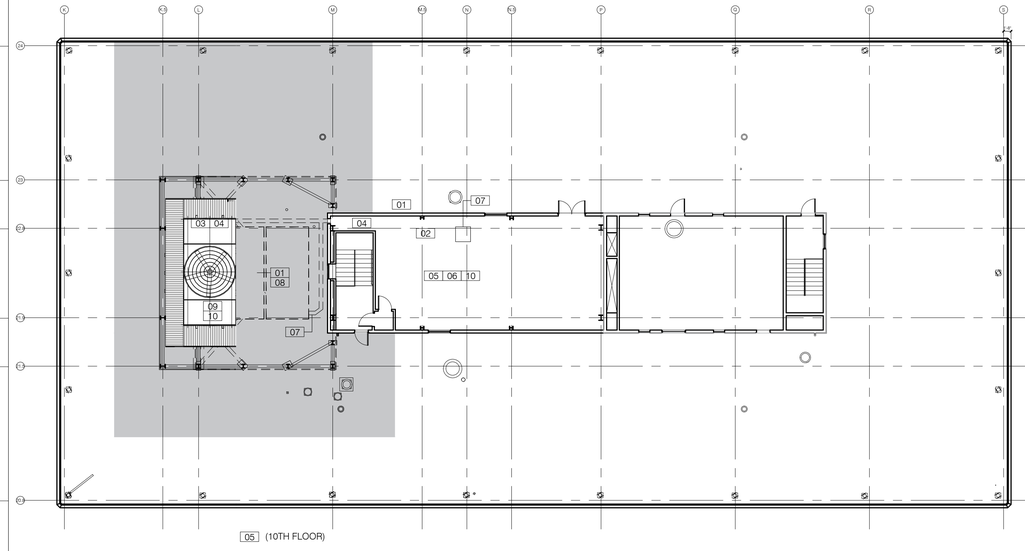

05 (10TH FLOOR)

CONSTRUCTION PHASE 4 - ± 8 WEEKS	
01	PROVIDE TEMPORARY COOLING, INCLUDING ALL TEMPORARY EQUIPMENT, CONNECTIONS, SUPPORTS, AS NEEDED TO MAINTAIN INTERIOR CONDITION OF BUILDING.
02	INSTALL TWO PUMPS IN THE LOCATIONS OF THE TWO REMOVED PUMPS.
03	INSTALL MISCELLANEOUS HYDRONIC EQUIPMENT INCLUDING AIR SEPARATORS, GLYCOL MAKEUP UNIT, AND EXPANSION TANKS.
04	COMPLETE ALL PIPING FOR SOUTH COOLING TOWER. INSTALL VARIABLE SPEED DRIVES.
05	INSTALL MAKEUP WATER, CHEMICAL TREATMENT, AND METER ON 10TH FLOOR. INSTALL PIPING UP TO MECHANICAL ROOM AND OUT TO SOUTH COOLING TOWER.
06	INSTALL AUTOMATIC TEMPERATURE CONTROLS FOR THE ENTIRE CONDENSER WATER SYSTEM, CONNECTING ONLY TO THE SOUTH COOLING TOWER AND TWO NEW PUMPS. WEEKEND SHUTDOWN SWITCHOVER TO CLOSED SYSTEM. RUN IN TEMPORARY CONFIGURATION DURING PEAK COOLING SEASON (JUNE 1 - SEPT. 30)
07	DISCONNECT THE NORTH TOWER FROM THE CW LOOP AND CONNECT INTO "COLD SIDE" OF TEMPORARY HX AND TO 'EX CWP-3' USING TEMP 8" PIPING.
08	CONNECT THE "HOT SIDE" OF THE TEMP HX INTO THE CW LOOP. DRAIN THE REMAINDER OF THE LOOP
09	CONNECT THE SOUTH FLUID COOLER INTO THE CW LOOP AND FILL THE LOOP WITH GLYCOL
10	START-UP/COMMISSION NEW CLOSED-CELL SOUTH COOLING TOWER

04 CONSTRUCTION PHASE 4

SCALE: 1/16"=1'-0"

COOLING TOWER CHANGEOVER NOTE:
THE SCOPE OF THE PROJECT REQUIRES A CHANGE FROM AN OPEN LOOP CONDENSER WATER SYSTEM WITH OPEN TOWERS TO A CLOSED LOOP GLYCOL SYSTEM WITH FLUID COOLERS. THE PROPOSED PHASING PLAN INCLUDES A TEMPORARY PLATE AND FRAME HEAT EXCHANGER TO REJECT HEAT BETWEEN THE NEW CLOSED LOOP SYSTEM WITH ONE NEW CLOSED LOOP FLUID COOLER INSTALLED AND THE ONE REMAINING OPEN TOWER AS A POSSIBLE METHOD TO MAINTAIN THE 800-TONS OF REQUIRED SUMMER CAPACITY DURING CONSTRUCTION, SUBJECT TO THE REQUIREMENTS OF THIS SECTION INCLUDING ON G-001. OTHER METHODS OF MAINTAINING THE REQUIRED BUILDING COOLING CAPACITY DURING CONSTRUCTION MAY BE APPROVED WILL BE ACCEPTED, PROVIDED THEY MEET THE REQUIREMENTS OF THIS SECTION, INCLUDING REQUIREMENTS LISTED ON G-001.

CONSTRUCTION PHASE NOTE:
CONSTRUCTION PHASING DIAGRAMS AND ESTIMATED TIME DURATIONS ARE INCLUDED FOR COORDINATION AND TO FACILITATE COST ESTIMATING EFFORTS. CONTRACTOR MUST PRODUCE OWN CONSTRUCTION PHASING PLAN FOR REVIEW AND APPROVAL BY THE COMMISSIONER PRIOR TO MOBILIZING ON SITE.

THE CONTRACTOR'S PHASING PLAN IS TO INCLUDE ALL ANTICIPATED TIMEFRAMES FOR WHEN THE EXISTING OPEN-LOOP COOLING TOWERS AND THE PROPOSED CLOSED-LOOP COOLING TOWERS WILL BE OPERATIONAL.

DOB APPROVAL STAMP

COOLING TOWER REPLACEMENT

BRONX DISTRICT ATTORNEY'S OFFICE
198 E 161ST STREET
NEW YORK, NEW YORK 10451

SPONSOR AGENCY:
DEPARTMENT OF CITYWIDE ADMINISTRATIVE SERVICES
MANHATTAN MUNICIPAL BUILDING
ONE CENTER STREET, 17 FLOOR SOUTH;
NEW YORK, NEW YORK 10007

MANAGING AGENCY:
DEPARTMENT OF DESIGN AND CONSTRUCTION
30-30 THOMSON AVENUE;
LONG ISLAND CITY, NEW YORK 10007

ARCHITECT:
NANDINEE PHOOKAN ARCHITECT
45 MAIN STREET SUITE #620
BROOKLYN NY 11201
P: 718 643 9500

STRUCTURAL ENGINEER:
LERA CONSULTING STRUCTURAL ENGINEERS
40 WALL STREET, FLOOR 23
NEW YORK, NY 10005
P: 212 750 9000

MEP ENGINEER:
DEWBERRY ENGINEERS
132 WEST 31ST STREET, SUITE 301
NEW YORK, NEW YORK 10001
P: 646 434 2822

PLUMBING ENGINEER:
AXON ENGINEERING SERVICES, LLC
222 OUTWATER LN, SUITE 3A
GARFIELD, NJ 07026
p: 917 677 2484

KEY PLAN:

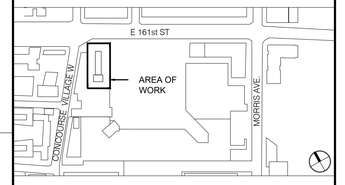

REVISIONS:

NUMBER	DESCRIPTION	DATE
	ISSUED FOR BID	01-27-2026
	ADDENDUM #3	05-12-2026

NYC DDC **Department of Design and Construction**

DIVISION OF PUBLIC BUILDINGS

CAPITAL PROJECT NUMBER:
PW77198CT

PROJECT
198 E 161ST STREET COOLING TOWER REPLACEMENT
198 E 161ST ST
BRONX, NY 10451

FOR THE:
Department of Citywide Administrative Services (DCAS)

DOB NOW APPLICATION: X01141830-I1

DRAWING TITLE:
CONSTRUCTION PHASING (1 OF 2)

SEAL & SIGNATURE

REGISTERED ARCHITECT NANDINEE PHOOKAN 026226 STATE OF NEW YORK

DATE:	5 December, 2025
PROJECT NO:	22_01
DRAWN BY:	AD
CHECKED BY:	NP/AA
DRAWING NUMBER:	G-100.00
CADO FILE No:	00 OF 00

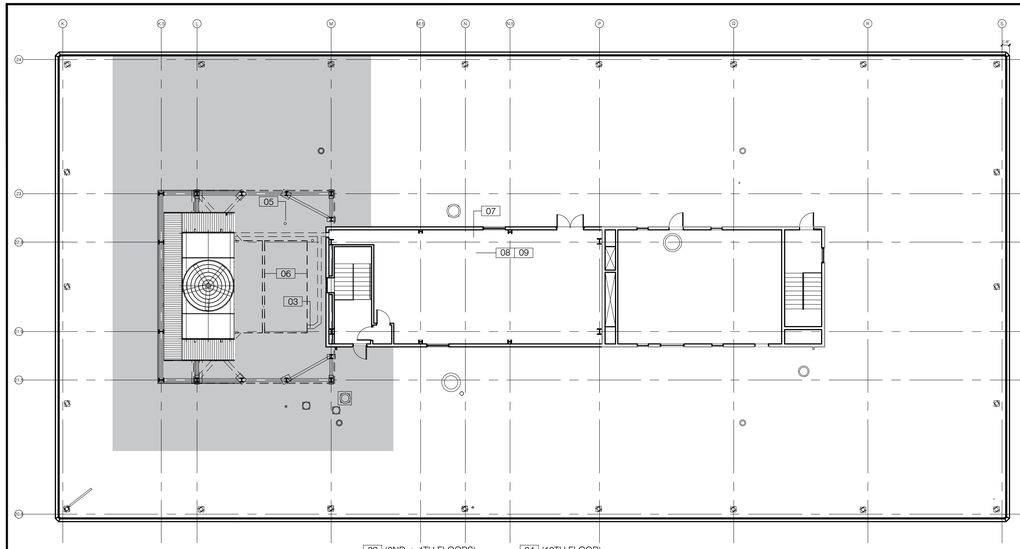

02 (2ND + 4TH FLOORS) 04 (10TH FLOOR)

CONSTRUCTION PHASE 5 - ± 8 WEEKS	
01	DISCONNECT AND REMOVE TEMPORARY HX AND ASSOCIATED PIPING
02	INSTALL MISCELLANEOUS VALVED OUTLETS ON THE 4TH FLOOR AND ON THE 2ND FLOOR FOR FUTURE USE.
03	SHUT DOWN AND DISCONNECT THE NORTH COOLING TOWER FROM THE PIPING DISTRIBUTION.
04	DISCONNECT AND REMOVE EXISITNG DOMESTIC MAKEUP WATER AT 10TH FLOOR CEILING - SEE PLUMBING DRAWINGS.
05	DISCONNECT EXISTING MAKEUP WATER AT ROOF LEVEL- SEE PLUMBING DRAWINGS. EXISTING PIPE TO BE CUT BELOW ROOF DECK AND ABOVE THE ROOF MEMBRANE FLASHING, AND CAPPED.
06	DECOMMISSION/DISASSEMBLE NORTH COOLING TOWER.
07	REMOVE FROM THE PENTHOUSE THE REMAINING EXISTING PUMP, EQUIPMENT AND PIPING SERVING THE EXISTING COOLING TOWERS
08	INSTALL NEW PUMP AND CONNECT TO HVAC SYSTEM, INCLUDING VARIABLE SPEED DRIVES.
09	COMPLETE ALL CONTROLS CONNECTIONS FOR THE PUMPS. COMPLETE ALL POWER WIRING CONNECTIONS FOR PUMPS.

01 CONSTRUCTION PHASE 5
SCALE: 1/16"=1'-0"

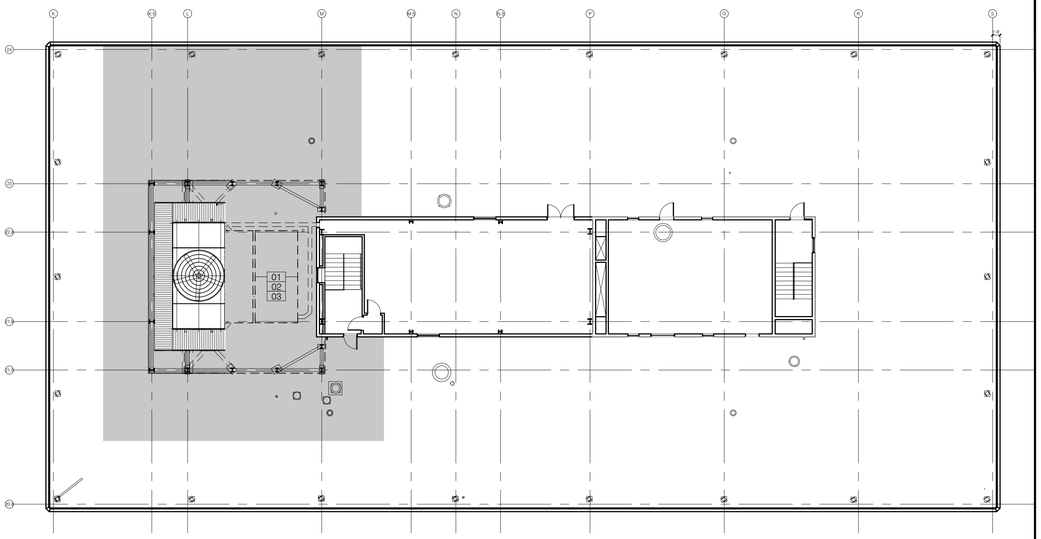

CONSTRUCTION PHASE 6 - ± 4 WEEKS	
01	REMOVE UPPER LAYERS OF EXISTING STEEL DUNNAGE BEAMS AND VIBRATION ISOLATORS BELOW DISMANTLED NORTH COOLING TOWER.
02	REMOVE EXISTING PAINT AND CORROSION FROM EXISTING STEEL DUNNAGE TO REMAIN BELOW DISMANTLED NORTH COOLING TOWER. REPAINT STEEL DUNNAGE WITH ZINC-RICH PAINT.
03	INSTALL NEW STEEL BEAMS TO COMPLETE FRAMING FOR UPPER ACCESS PLATFORM AND SUPPORT OF THE NEW NORTH COOLING TOWER.

06 CONSTRUCTION PHASE 6
SCALE: 1/16"=1'-0"

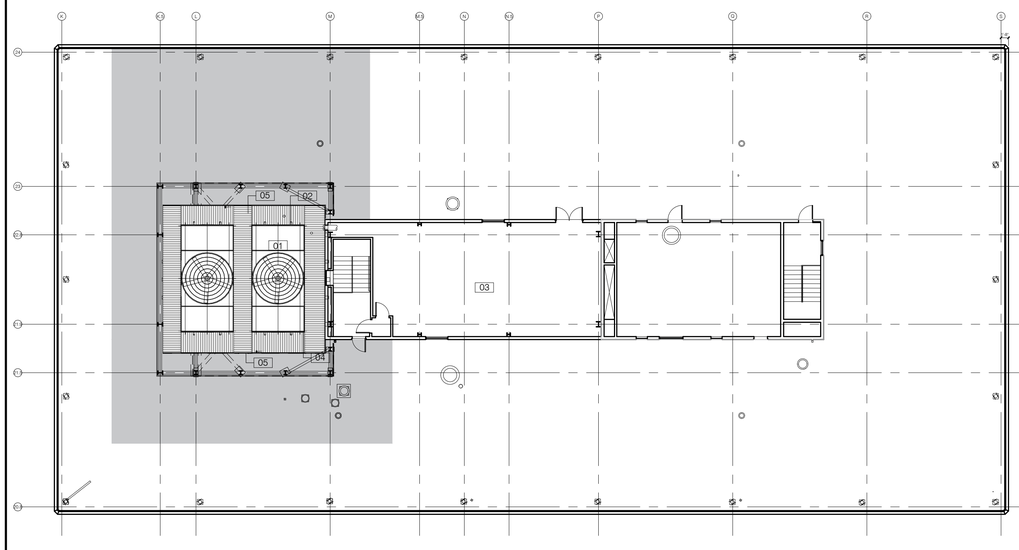

CONSTRUCTION PHASE 7 - ± 10 WEEKS	
01	DELIVER AND RIG TO ROOF NEW CLOSED-CELL NORTH COOLING TOWER.
02	CONNECT NORTH COOLING TOWER TO PIPING DISTRIBUTION. EXTEND ELECTRICAL WIRING, EXTEND DOMESTIC WATER PIPING FROM MAKEUP.
03	CONNECT NORTH COOLING TOWER TO PROGRAM CONTROL SYSTEM. INSTALL VARIABLE SPEED DRIVES.
04	INSTALL NEW LIGHTNING PROTECTION AIR TERMINALS AT NORTH COOLING TOWER.
05	INSTALL BAR GRATING, RAILINGS, ACCESS LADDER AND SWING GATE FOR SERVICE PLATFORM AROUND NEW NORTH COOLING TOWER

03 CONSTRUCTION PHASE 7
SCALE: 1/16"=1'-0"

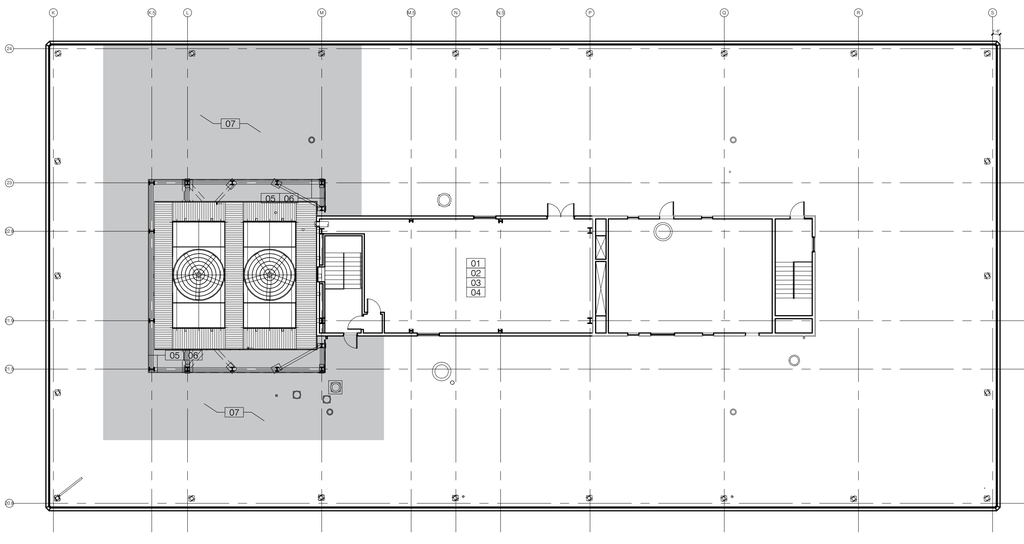

CONSTRUCTION PHASE 8 - ± 6 WEEKS	
01	START-UP/COMMISSION NORTH COOLING TOWER.
02	HYDROSTATICALLY TEST AND BALANCE THE ENTIRE SYSTEM.
03	RECONFIGURE ALL CONTROLS TO OPERATE ON CONDENSER WATER IN LIEU OF AIRSIDE ECONOMIZER.
04	COMPLETE ALL MISCELLANEOUS INSTALLATIONS.
05	REINSTALL/INSTALL SCREEN WALL AROUND EQUIPMENT ENCLOSURE.
06	COMPLETE LIGHTNING PROTECTION INSTALLATION.
07	REMOVE ROOF PROTECTION AND DEMOBILIZE FROM SITE.

04 CONSTRUCTION PHASE 8
SCALE: 1/16"=1'-0"

COOLING TOWER CHANGEOVER NOTE:
THE SCOPE OF THE PROJECT REQUIRES A CHANGE FROM AN OPEN LOOP CONDENSER WATER SYSTEM WITH OPEN TOWERS TO A CLOSED LOOP GLYCOL SYSTEM WITH FLUID COOLERS. THE PROPOSED PHASING PLAN INCLUDES A TEMPORARY PLATE AND FRAME HEAT EXCHANGER TO REJECT HEAT BETWEEN THE NEW CLOSED LOOP SYSTEM WITH ONE NEW CLOSED LOOP FLUID COOLER INSTALLED AND THE ONE REMAINING OPEN TOWER AS A POSSIBLE METHOD TO MAINTAIN THE 800-TONS OF REQUIRED SUMMER CAPACITY DURING CONSTRUCTION, SUBJECT TO THE REQUIREMENTS OF THIS SECTION INCLUDING ON G-001. OTHER METHODS OF MAINTAINING THE REQUIRED BUILDING COOLING CAPACITY DURING CONSTRUCTION MAY BE APPROVED WILL BE ACCEPTED, PROVIDED THEY MEET THE REQUIREMENTS OF THIS SECTION, INCLUDING REQUIREMENTS LISTED ON G-001.

CONSTRUCTION PHASE NOTE:
CONSTRUCTION PHASING DIAGRAMS AND ESTIMATED TIME DURATIONS ARE INCLUDED FOR COORDINATION AND TO FACILITATE COST ESTIMATING EFFORTS. CONTRACTOR MUST PRODUCE OWN CONSTRUCTION PHASING PLAN FOR REVIEW AND APPROVAL BY THE COMMISSIONER PRIOR TO MOBILIZING ON SITE.

THE CONTRACTOR'S PHASING PLAN IS TO INCLUDE ALL ANTICIPATED TIMEFRAMES FOR WHEN THE EXISTING OPEN-LOOP COOLING TOWERS AND THE PROPOSED CLOSED-LOOP COOLING TOWERS WILL BE OPERATIONAL.

DOB APPROVAL STAMP

COOLING TOWER REPLACEMENT

BRONX DISTRICT ATTORNEY'S OFFICE
198 E 161ST STREET
NEW YORK, NEW YORK 10451

SPONSOR AGENCY:
DEPARTMENT OF CITYWIDE ADMINISTRATIVE SERVICES
MANHATTAN MUNICIPAL BUILDING
ONE CENTER STREET, 17 FLOOR SOUTH;
NEW YORK, NEW YORK 10007

MANAGING AGENCY:
DEPARTMENT OF DESIGN AND CONSTRUCTION
30-30 THOMSON AVENUE;
LONG ISLAND CITY, NEW YORK 10007

ARCHITECT:
NANDINEE PHOOKAN ARCHITECT
45 MAIN STREET SUITE #620
BROOKLYN NY 11201
P: 718 643 9500

STRUCTURAL ENGINEER:
LERA CONSULTING STRUCTURAL ENGINEERS
40 WALL STREET, FLOOR 23
NEW YORK, NY 10005
P: 212 750 9000

MEP ENGINEER:
DEWBERRY ENGINEERS
132 WEST 31ST STREET, SUITE 301
NEW YORK, NEW YORK 10001
P: 646 434 2822

PLUMBING ENGINEER:
AXON ENGINEERING SERVICES, LLC
222 OUTWATER LN, SUITE 3A
GARFIELD, NJ 07026
p: 917 677 2484

KEY PLAN:

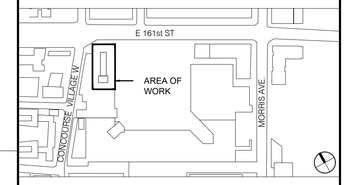

REVISIONS:

NUMBER	DESCRIPTION	DATE
	ISSUED FOR BID	01-27-2026
	ADDENDUM #3	05-12-2026

NYC DDC Department of Design and Construction

DIVISION OF PUBLIC BUILDINGS

CAPITAL PROJECT NUMBER:
PW77198CT

PROJECT
198 E 161ST STREET COOLING TOWER REPLACEMENT
198 E 161ST ST
BRONX, NY 10451

FOR THE:
Department of Citywide Administrative Services (DCAS)

DOB NOW APPLICATION: X01141830-I1

DRAWING TITLE:
CONSTRUCTION PHASING (2 OF 2)

SEAL & SIGNATURE

REGISTERED ARCHITECT NANDINEE PHOOKAN 025225 STATE OF NEW YORK

DATE:	5 December, 2025
PROJECT NO:	22_01
DRAWN BY:	AD
CHECKED BY:	NP/AA
DRAWING NUMBER:	G-101.00
CADO FILE No:	00 OF 00

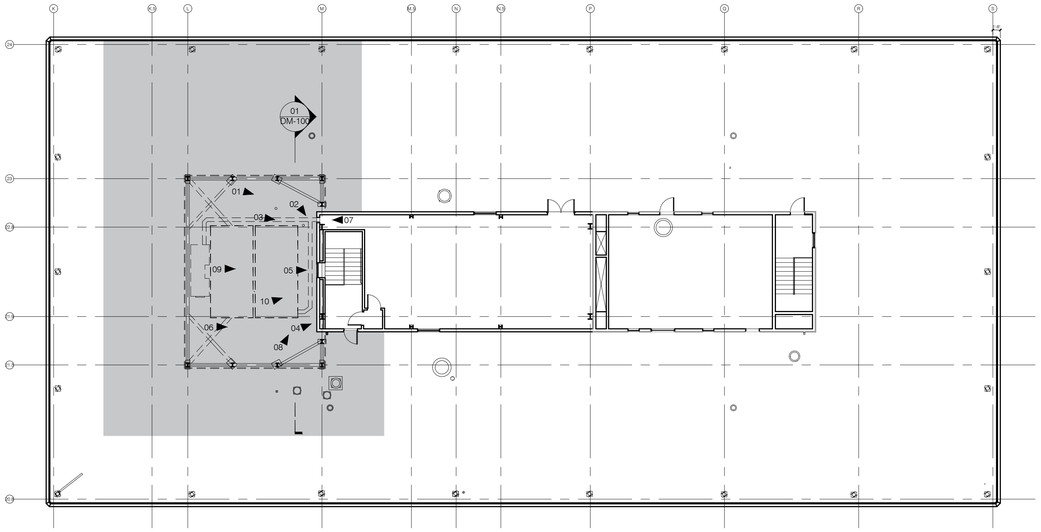

01 ROOF DEMOLITION KEY PLAN
SCALE: 1/16"=1'-0"

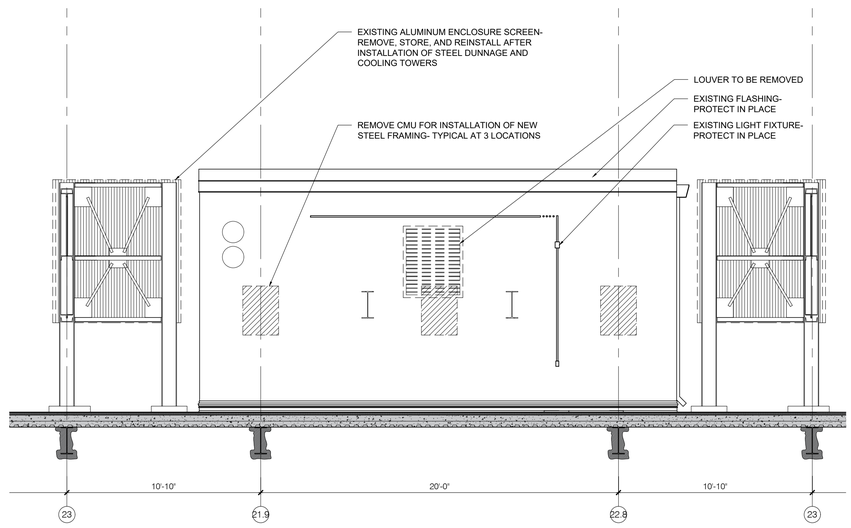

02 DEMOLITION ELEVATION OF PENTHOUSE WALL
SCALE: 1/4"=1'-0"

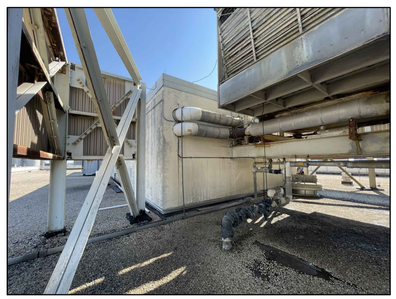
01

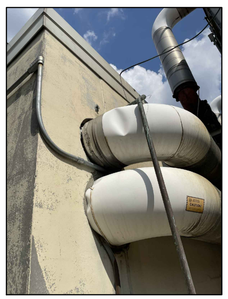
02

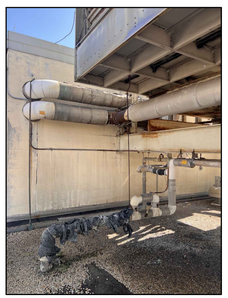
03

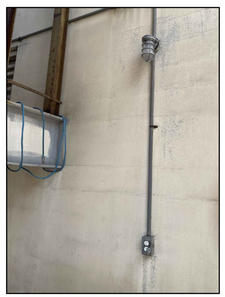
04

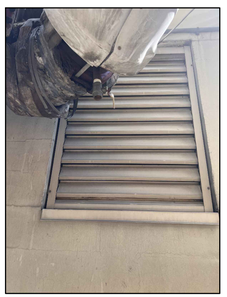
05

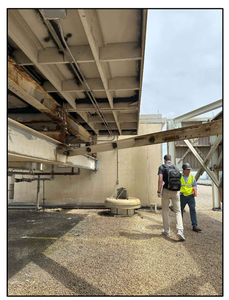
06


07


08


09


10

03 EXISTING ROOF PHOTOS
SCALE: NTS

COOLING TOWER REPLACEMENT

BRONX DISTRICT ATTORNEY'S OFFICE
198 E 161ST STREET
NEW YORK, NEW YORK 10451

SPONSOR AGENCY:
DEPARTMENT OF CITYWIDE ADMINISTRATIVE SERVICES
MANHATTAN MUNICIPAL BUILDING
ONE CENTER STREET, 17 FLOOR SOUTH;
NEW YORK, NEW YORK 10007

MANAGING AGENCY:
DEPARTMENT OF DESIGN AND CONSTRUCTION
30-30 THOMSON AVENUE;
LONG ISLAND CITY, NEW YORK 10007

ARCHITECT:
NANDINEE PHOOKAN ARCHITECT
45 MAIN STREET SUITE #620
BROOKLYN NY 11201
P: 718 643 9500

STRUCTURAL ENGINEER:
LERA CONSULTING STRUCTURAL ENGINEERS
40 WALL STREET, FLOOR 23
NEW YORK, NY 10005
P: 212 750 9000

MEP ENGINEER:
DEWBERRY ENGINEERS
132 WEST 31ST STREET, SUITE 301
NEW YORK, NEW YORK 10001
P: 646 434 2822

PLUMBING ENGINEER:
AXON ENGINEERING SERVICES, LLC
222 OUTWATER LN, SUITE 3A
GARFIELD, NJ 07026
p: 917 677 2484

KEY PLAN:

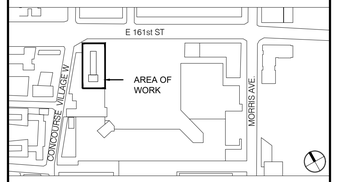

REVISIONS:

NUMBER	DESCRIPTION	DATE
	ISSUED FOR BID	01-27-2026
	ADDENDUM #2	04-29-2026

NYC DDC Department of Design and Construction

DIVISION OF PUBLIC BUILDINGS

CAPITAL PROJECT NUMBER:
PW77198CT

PROJECT
198 E 161ST STREET COOLING TOWER REPLACEMENT
198 E 161ST ST
BRONX, NY 10451

FOR THE:
Department of Citywide Administrative Services (DCAS)

DOB NOW APPLICATION: X01141830-I1

DRAWING TITLE:
ROOF DEMOLITION PLAN, ELEVATION, & SITE PHOTOS

DOB APPROVAL STAMP

SEAL & SIGNATURE



DATE:	5 December, 2025
PROJECT NO:	22_01
DRAWN BY:	AD
CHECKED BY:	NP/AA
DRAWING NUMBER:	DM-100.00
CADO FILE No:	
	00 OF 00

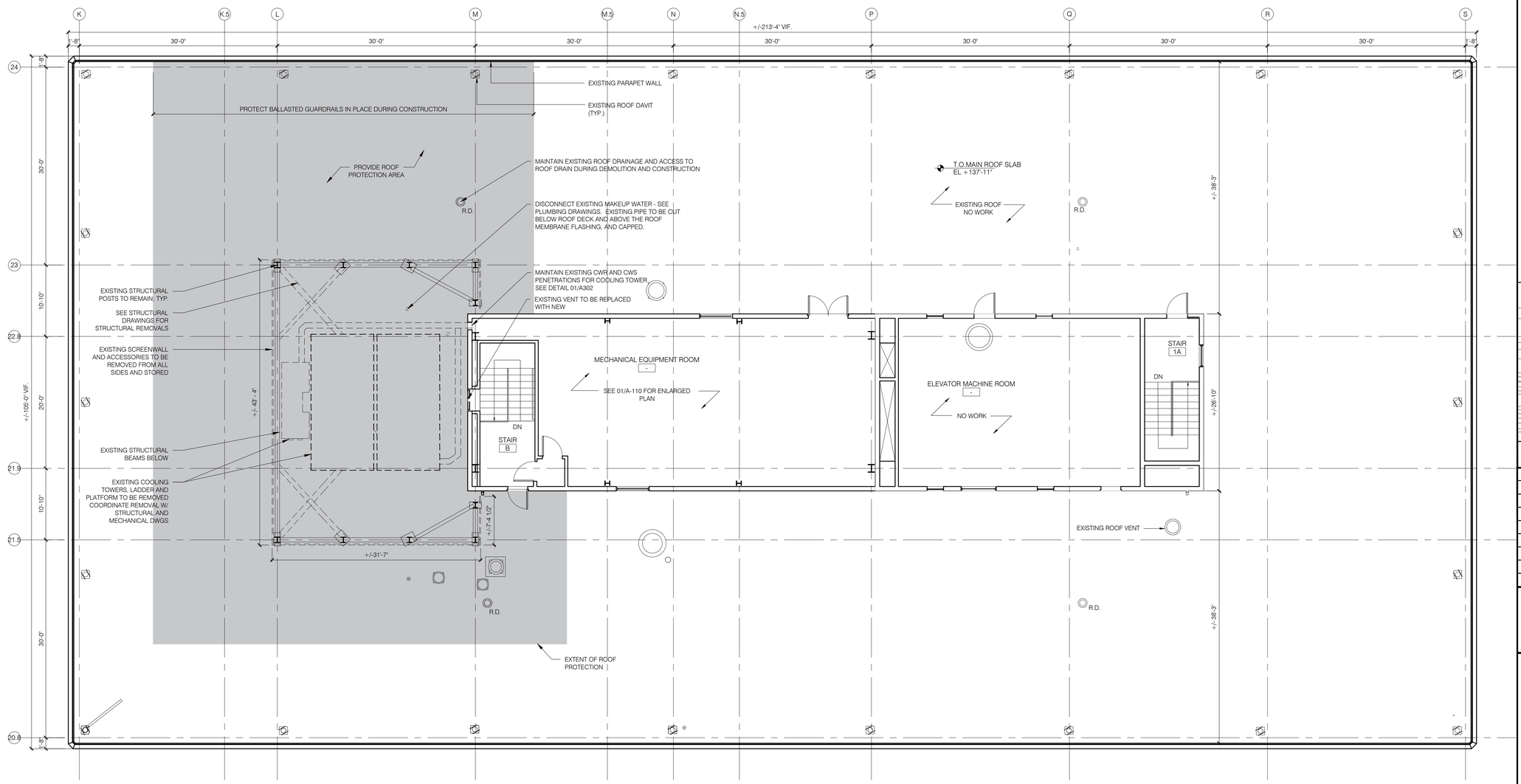

01 MAIN ROOF DEMOLITION PLAN

SCALE: 1/8"=1'-0"

LEGEND

ROOF PROTECTION - PROVIDE 3/4" MARINE GRADE PLYWOOD OVER 2" RIGID INSULATION (40 PSI)

DEMOLITION GENERAL NOTES

1. ALL REMOVAL WORK IS TO BE PERFORMED IN STRICT ACCORDANCE WITH THE NYC BUILDING CODE AND WITH THE RULES AND REGULATIONS OF ALL LOCAL, AGENCIES, DEPARTMENT OR LAWS HAVING JURISDICTION, INCLUDING BUT NOT LIMITED TO OSHA, ANSI, NFPA, ETC. THE CONTRACTOR IS TO COORDINATE THE REMOVAL WORK WITH PUBLIC UTILITY COMPANIES HAVING JURISDICTION.
2. OBTAIN ALL REQUIRED PERMITS AND PAY ALL FEES AS PART OF THE REMOVAL WORK REQUIRED FOR THIS PROJECT.
3. CHECK AND VERIFY ALL CONDITIONS AFFECTING THE DEMOLITION AND NOTIFY THE COMMISSIONER OF ANY DISCREPANCIES ON THE DRAWINGS WHICH WOULD AFFECT THE WORK.
4. PROTECT AND PRESERVE ALL EXISTING ITEMS TO REMAIN AND REPAIR AND/OR REPLACE ANY ITEMS DAMAGED DURING THE COURSE OF THE WORK TO THE SATISFACTION OF THE COMMISSIONER AT NO ADDITIONAL COST TO THE CITY OF NEW YORK.
5. COORDINATE SITE PROTECTION WITH WORK SHOWN ON PLUMBING, ELECTRICAL, MECHANICAL AND STRUCTURAL DRAWINGS, INCLUDING WORK ON LOWER FLOORS OF THE BUILDING. COORDINATE PROTECTION REQUIREMENTS WITH BUILDING MANAGEMENT, INCLUDING REQUIREMENTS AT CORRIDORS AND ELEVATORS AS NEEDED TO DELIVER OR CART MATERIALS.
6. ALL DEMOLITION DEBRIS IS TO BE REMOVED AT LEAST ONCE PER DAY TO MAINTAIN SAFE WORK CONDITIONS. VERIFY METHOD AND LOCATION OF REMOVAL WITH THE COMMISSIONER PRIOR TO BEGINNING WORK.
7. NO DEBRIS OR BUILDING MATERIALS MAY BE STORED ON ANY PUBLIC SIDEWALKS.
8. ALL PLUMBING REMOVAL WORK IS TO BE DONE BY LICENSED PLUMBER.
9. ALL EXITS ARE TO BE KEPT READILY ACCESSIBLE AND UNOBSTRUCTED AT ALL TIMES.
10. PROVIDE TEMPORARY LIGHTING AND ELECTRICAL SERVICE IN THE WORK AREA AS REQUIRED TO COMPLETE THE WORK.
11. ALL ELECTRICAL LIVE EQUIPMENT AND CIRCUITS ARE TO BE LEFT IN SAFE, OPERATING CONDITION, AND IN FULL COMPLIANCE WITH THE NY ELECTRICAL CODE REQUIREMENTS. BOXES AND PANELS ARE TO BE COVERED, KNOCKOUTS ARE TO BE PLUGGED AND WIRE ENDS ARE TO BE CAPPED AND INSULATED. WHERE EQUIPMENT, DEVICES AND WIRING ARE TO BE REMOVED, REMOVAL WILL INCLUDE ALL WIRE, CONDUITS, BOXES, ETC. BACK TO THE SOURCE OR TO THE REMAINING LIVE JUNCTION BOX. EXPOSED CABLES & CONDUITS WILL BE REMOVED ENTIRELY. CONDUITS EMBEDDED IN SLABS AND MASONRY WALLS MAY BE ABANDONED IN PLACE, WIRING REMOVED, CUT FLUSH TO CONCRETE UNLESS OTHERWISE INSTRUCTED. DAMPERS TO BE REUSED. ALL ELECTRICAL REMOVAL WORK IS TO BE DONE BY LICENSED ELECTRICIAN.
12. KEEP FIRE EXTINGUISHER ON SITE AT ALL TIMES.
13. SMOKE ALARMS MUST BE MAINTAINED AS REQUIRED BY LAW.
14. PERFORM DEMO WORK RELATED TO MEP/STRUCTURAL DESIGN NOT SHOWN ON THIS PLAN. REFER TO MEP/STRUCTURAL DRAWINGS.
15. NEW OPENINGS TO BE FULLY COORDINATED WITH STRUCTURAL DRAWINGS INCLUDING ALL ROOF AND WALL PENETRATIONS.
16. CONTRACTOR TO PROTECT EXISTING ROOF DRAINS AND/OR PROPERTY CLEAR FROM DEBRIS
17. PRIOR TO START OF ANY WORK CONTRACTOR IS TO COORDINATE WITH THE ROOFING MANUFACTURER TO AVOID VOIDING ANY EXISTING WARRANTIES.
18. ROOF PROTECTION IS REQUIRED TO BE MAINTAINED DURING THE COURSE OF DEMOLITION AND CONSTRUCTION. DIMENSIONS AND EXTENTS OF PROTECTION ARE SHOWN FOR COORDINATION PURPOSES ONLY. CONTRACTOR IS TO DETERMINE REQUIRED EXTENTS OF PROTECTION AS NEEDED FOR PROJECT STAGING, DEMOLITION, CARTING, AND INSTALLATION.
19. REFER TO G-100 AND G-101 FOR CONSTRUCTION PHASING NOTES. CONTRACTOR IS TO PRODUCE THEIR OWN PHASING PLAN FOR REVIEW AND APPROVAL BY THE COMMISSIONER.

DOB APPROVAL STAMP

COOLING TOWER REPLACEMENT

BRONX DISTRICT ATTORNEY'S OFFICE
198 E 161ST STREET
NEW YORK, NEW YORK 10451

SPONSOR AGENCY:
DEPARTMENT OF CITYWIDE ADMINISTRATIVE SERVICES
MANHATTAN MUNICIPAL BUILDING
ONE CENTER STREET, 17 FLOOR SOUTH;
NEW YORK, NEW YORK 10007

MANAGING AGENCY:
DEPARTMENT OF DESIGN AND CONSTRUCTION
30-30 THOMSON AVENUE;
LONG ISLAND CITY, NEW YORK 10007

ARCHITECT:
NANDINEE PHOOKAN ARCHITECT
45 MAIN STREET SUITE #620
BROOKLYN NY 11201
P: 718 643 9500

STRUCTURAL ENGINEER:
LERA CONSULTING STRUCTURAL ENGINEERS
40 WALL STREET, FLOOR 23
NEW YORK, NY 10005
P: 212 750 9000

MEP ENGINEER:
DEWBERRY ENGINEERS
132 WEST 31ST STREET, SUITE 301
NEW YORK, NEW YORK 10001
P: 646 434 2822

PLUMBING ENGINEER:
AXON ENGINEERING SERVICES, LLC
222 OUTWATER LN, SUITE 3A
GARFIELD, NJ 07026
p: 917 677 2484

KEY PLAN:

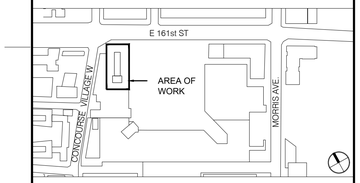

REVISIONS:

NUMBER	DESCRIPTION	DATE
	ISSUED FOR BID	01-27-2026

Department of Design and Construction

DIVISION OF PUBLIC BUILDINGS

CAPITAL PROJECT NUMBER:
PW77198CT

PROJECT
198 E 161ST STREET COOLING TOWER REPLACEMENT
198 E 161ST ST
BRONX, NY 10451

FOR THE:
Department of Citywide Administrative Services (DCAS)

DOB NOW APPLICATION: X01141830-I1

DRAWING TITLE:
MAIN ROOF DEMOLITION PLAN

SEAL & SIGNATURE



DATE:	5 December, 2025
PROJECT NO:	22_01
DRAWN BY:	AD
CHECKED BY:	NP/AA
DRAWING NUMBER:	DM-101.00
CADO FILE No:	
	00 OF 00

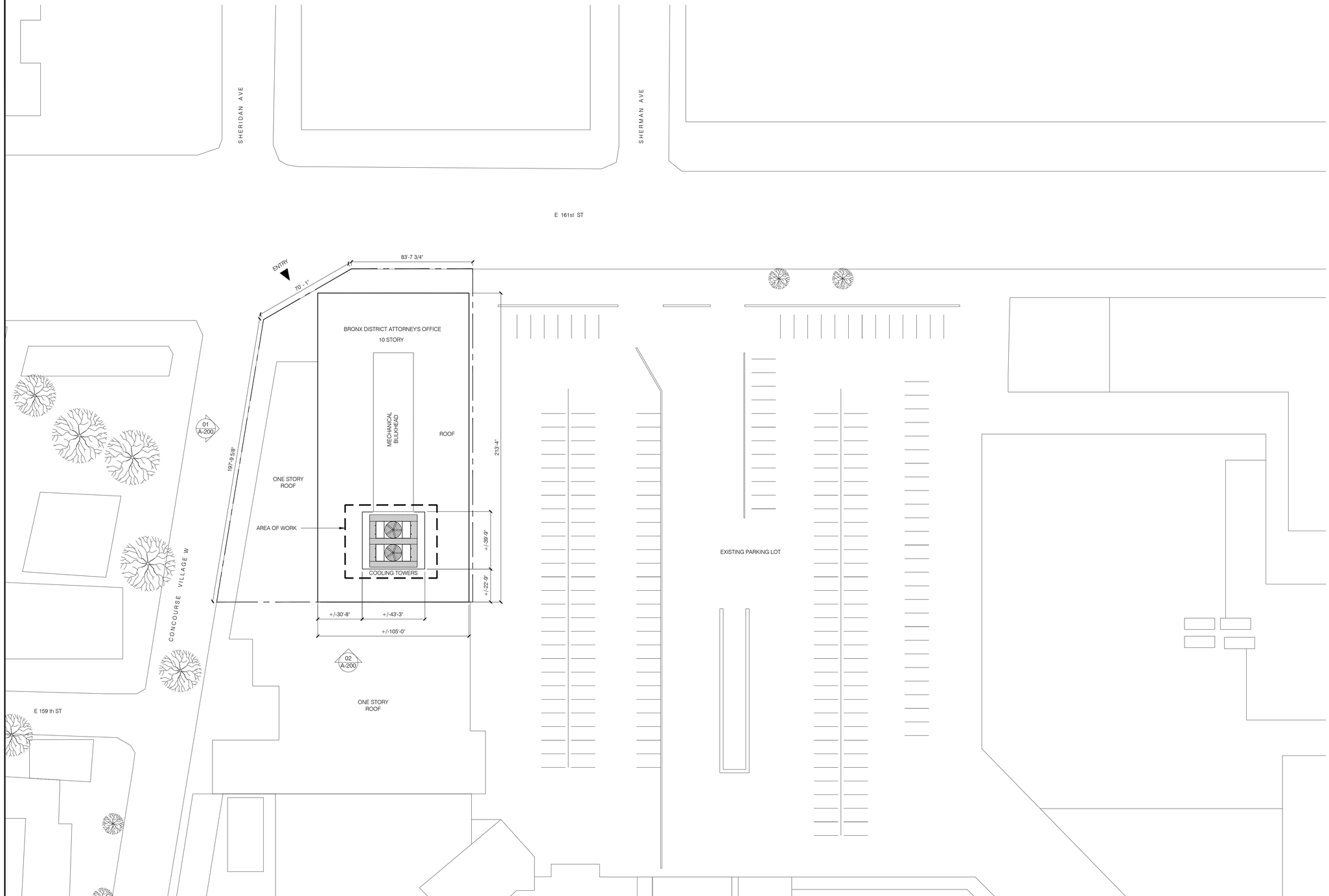

01 SITE PLAN
SCALE: 1/32" = 1'-0"

COOLING TOWER REPLACEMENT

BRONX DISTRICT ATTORNEY'S OFFICE
198 E 161ST STREET
NEW YORK, NEW YORK 10451

SPONSOR AGENCY:
DEPARTMENT OF CITYWIDE ADMINISTRATIVE SERVICES
MANHATTAN MUNICIPAL BUILDING
ONE CENTER STREET, 17 FLOOR SOUTH;
NEW YORK, NEW YORK 10007

MANAGING AGENCY:
DEPARTMENT OF DESIGN AND CONSTRUCTION
30-30 THOMSON AVENUE;
LONG ISLAND CITY, NEW YORK 10007

ARCHITECT:
NANDINEE PHOOKAN ARCHITECT
45 MAIN STREET SUITE #620
BROOKLYN NY 11201
P: 718 643 9500

STRUCTURAL ENGINEER:
LERA CONSULTING STRUCTURAL ENGINEERS
40 WALL STREET, FLOOR 23
NEW YORK, NY 10005
P: 212 750 9000

MEP ENGINEER:
DEWBERRY ENGINEERS
132 WEST 31ST STREET, SUITE 301
NEW YORK, NEW YORK 10001
P: 646 434 2822

PLUMBING ENGINEER:
AXON ENGINEERING SERVICES, LLC
222 OUTWATER LN, SUITE 3A
GARFIELD, NJ 07026
p: 917 677 2484

KEY PLAN:

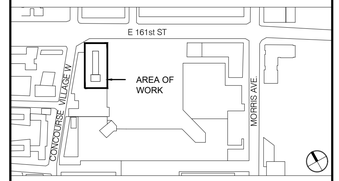

REVISIONS:

NUMBER	DESCRIPTION	DATE
	ISSUED FOR BID	01-27-2026

Department of Design and Construction

DIVISION OF PUBLIC BUILDINGS

CAPITAL PROJECT NUMBER:
PW77198CT

PROJECT
198 E 161ST STREET COOLING TOWER REPLACEMENT
198 E 161ST ST
BRONX, NY 10451

FOR THE:
Department of Citywide Administrative Services (DCAS)

DOB NOW APPLICATION: X01141830-I1

DRAWING TITLE:
SITE PLAN

DOB APPROVAL STAMP

SEAL & SIGNATURE

REGISTERED ARCHITECT NANDINEE PHOOKAN 025226 STATE OF NEW YORK

DATE:	5 December, 2025
PROJECT NO:	22_01
DRAWN BY:	AD
CHECKED BY:	NP/AA
DRAWING NUMBER:	A-100.00
CADO FILE No. 02	00 OF 00

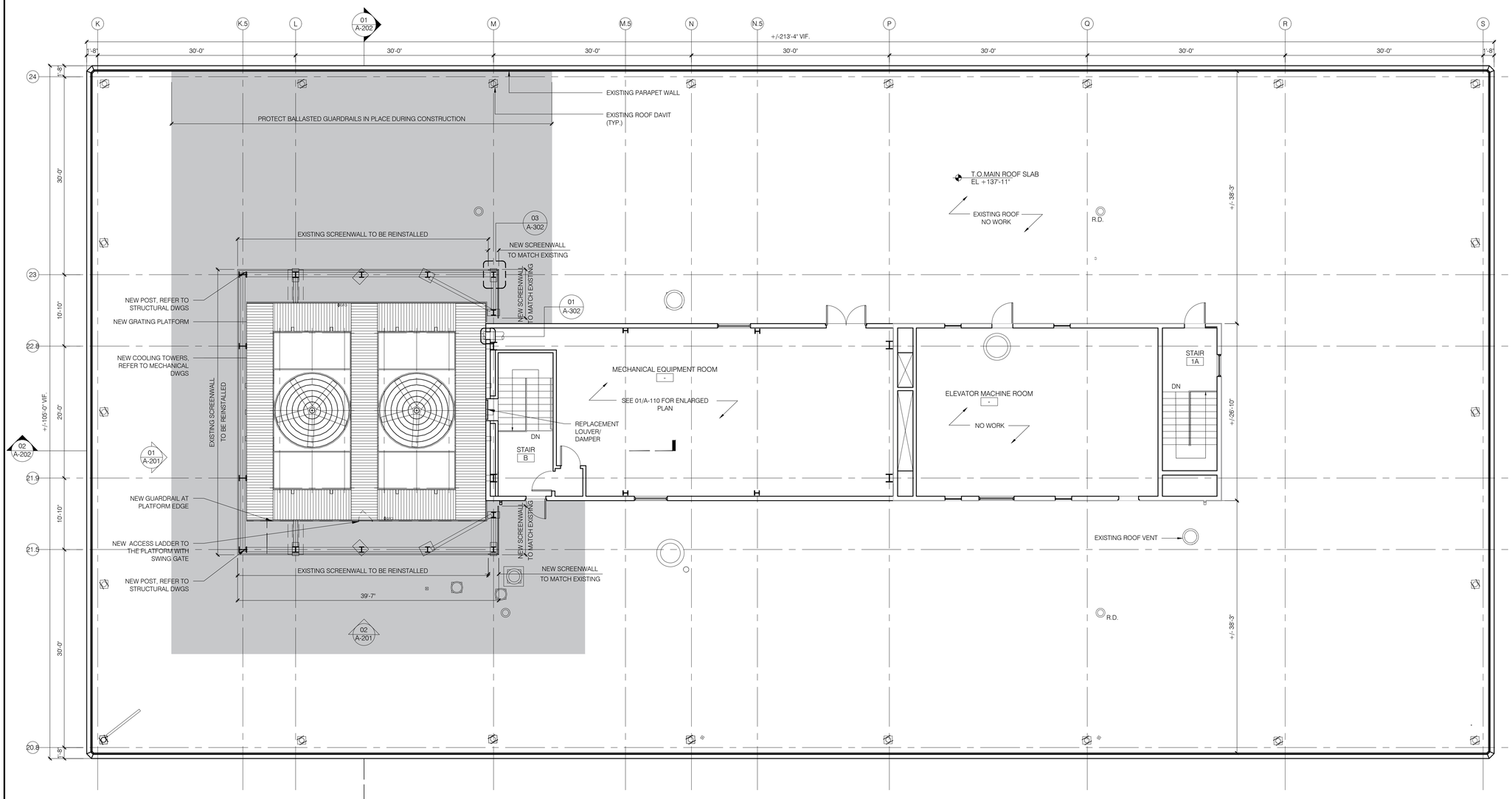

01 PROPOSED ROOF PLAN AT NEW COOLING TOWERS

SCALE: 1/8"=1'-0"

LEGEND

ROOF PROTECTION - PROVIDE 3/4" MARINE GRADE PLYWOOD OVER 2" RIGID INSULATION (40 PSI)

NEW CONSTRUCTION GENERAL NOTES

1. PATCH AND REPAIR ALL SLAB, WALL, AND COLUMN PENETRATIONS DAMAGED DURING CONSTRUCTION.
2. REFER TO MEP DRAWINGS FOR MECHANICAL, ELECTRICAL, AND PLUMBING/FIRE SAFETY WORK. NEW CONDUIT AND PIPING IS TO BE CONCEALED WHERE POSSIBLE, AND INSTALLED IN AN ORDERLY MANNER WHERE EXPOSED.
3. REFER TO STRUCTURAL DRAWINGS FOR STEEL SUPPORT PROVIDED FOR THE PROPOSED COOLING TOWERS.
4. REFER TO PIPE PENETRATION DETAILS ON ARCHITECTURAL DETAILS AND MEP DRAWINGS AS REQ'D.
5. REFER TO MECHANICAL DRAWINGS FOR HVAC SPECIFICATION, INCLUDING LOCATION OF COOLING TOWERS, HOT WATER, AND DUCT/ PIPE DISTRIBUTION.
6. COORDINATE ALL REMOVAL, REPAIR, AND REPLACEMENT WITH ROOFING MANUFACTURER TO AVOID VOIDING WARRANTY.

DOB APPROVAL STAMP

COOLING TOWER REPLACEMENT

BRONX DISTRICT ATTORNEY'S OFFICE
198 E 161ST STREET
NEW YORK, NEW YORK 10451

SPONSOR AGENCY:
DEPARTMENT OF CITYWIDE ADMINISTRATIVE SERVICES
MANHATTAN MUNICIPAL BUILDING
ONE CENTER STREET, 17 FLOOR SOUTH;
NEW YORK, NEW YORK 10007

MANAGING AGENCY:
DEPARTMENT OF DESIGN AND CONSTRUCTION
30-30 THOMSON AVENUE;
LONG ISLAND CITY, NEW YORK 10007

ARCHITECT:
NANDINEE PHOOKAN ARCHITECT
45 MAIN STREET SUITE #620
BROOKLYN NY 11201
P: 718 643 9500

STRUCTURAL ENGINEER:
LERA CONSULTING STRUCTURAL ENGINEERS
40 WALL STREET, FLOOR 23
NEW YORK, NY 10005
P: 212 750 9000

MEP ENGINEER:
DEWBERRY ENGINEERS
132 WEST 31ST STREET, SUITE 301
NEW YORK, NEW YORK 10001
P: 646 434 2822

PLUMBING ENGINEER:
AXON ENGINEERING SERVICES, LLC
222 OUTWATER LN, SUITE 3A
GARFIELD, NJ 07026
p: 917 677 2484

KEY PLAN:

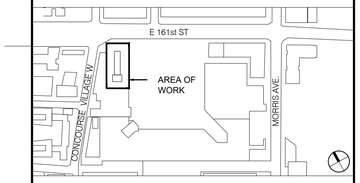

REVISIONS:

NUMBER	DESCRIPTION	DATE
	ISSUED FOR BID	01-27-2026

Department of Design and Construction

DIVISION OF PUBLIC BUILDINGS

CAPITAL PROJECT NUMBER:
PW77198CT

PROJECT
198 E 161ST STREET COOLING TOWER REPLACEMENT
198 E 161ST ST
BRONX, NY 10451

FOR THE:
Department of Citywide Administrative Services (DCAS)

DOB NOW APPLICATION: X01141830-I1

DRAWING TITLE:
MAIN ROOF PROPOSED PLAN

SEAL & SIGNATURE

REGISTERED ARCHITECT NANDINEE PHOOKAN 025226 STATE OF NEW YORK

DATE:	5 December, 2025
PROJECT NO:	22_01
DRAWN BY:	AD
CHECKED BY:	NP/AA
DRAWING NUMBER:	A-101.00
CADO FILE No:	00 OF 00

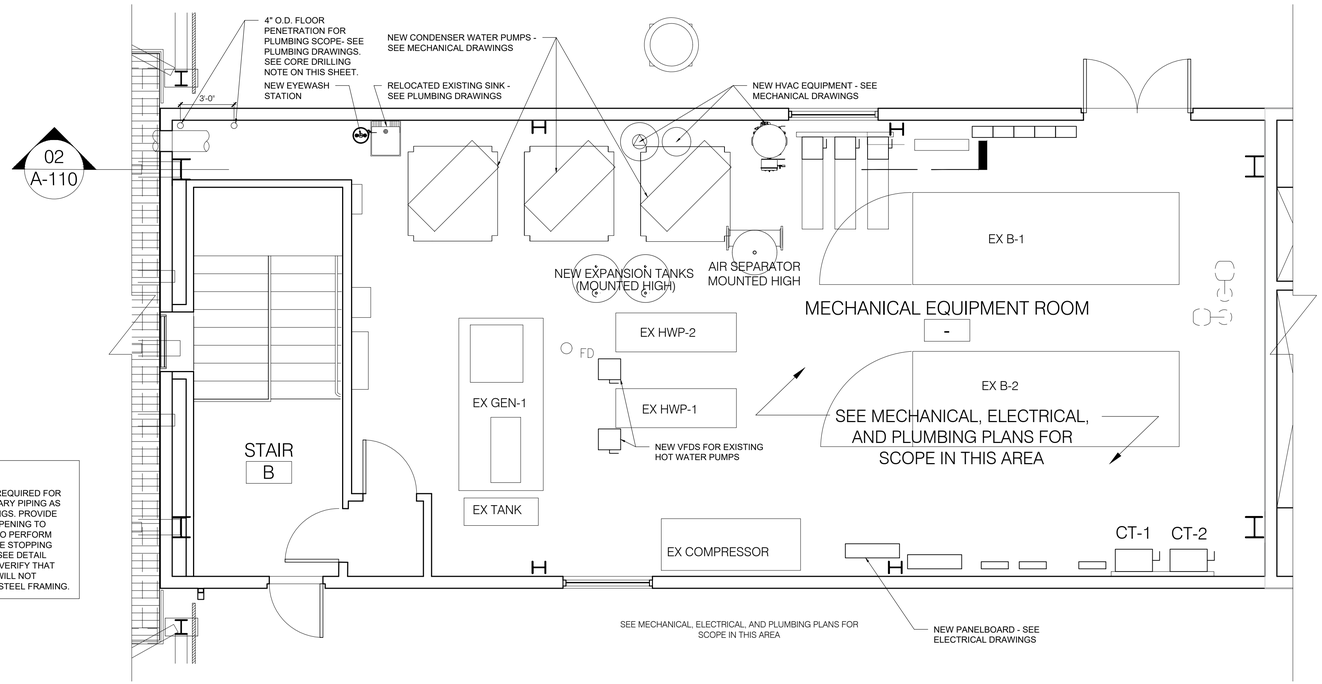

CORE DRILLING NOTE:

PROVIDE SLAB OPENINGS AS REQUIRED FOR PLUMBING SUPPLY AND SANITARY PIPING AS SHOWN ON PLUMBING DRAWINGS. PROVIDE MINIMUM CLEARANCE FROM OPENING TO ADJACENT WALL AS NEEDED TO PERFORM THE CORE DRILL. PROVIDE FIRE STOPPING AROUND PIPE PENETRATION (SEE DETAIL 05/A-302). CONTRACTOR IS TO VERIFY THAT THE LOCATION OF THE CORE WILL NOT DAMAGE ADJACENT EXISTING STEEL FRAMING.

01 ENLARGED PLAN OF MECHANICAL EQUIPMENT ROOM
SCALE: 1/4" = 1'-0"

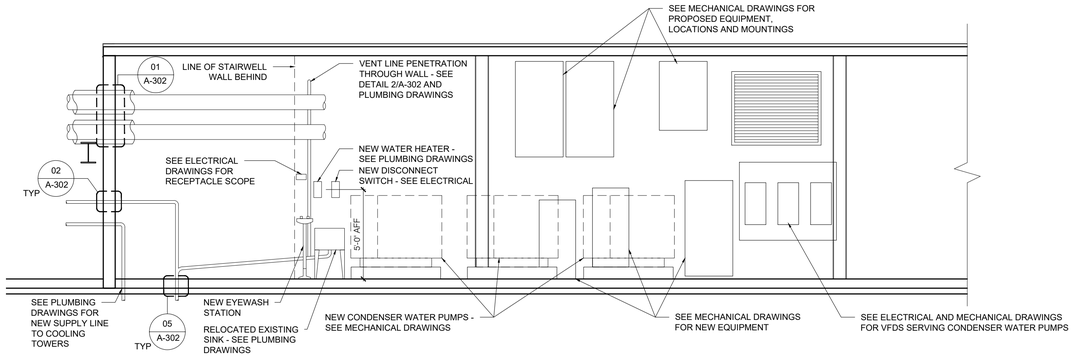

02 WEST ELEVATION OF MECHANICAL EQUIPMENT ROOM
SCALE: 1/4" = 1'-0"

DOB APPROVAL STAMP

COOLING TOWER REPLACEMENT

BRONX DISTRICT ATTORNEY'S OFFICE
198 E 161ST STREET
NEW YORK, NEW YORK 10451

SPONSOR AGENCY:
DEPARTMENT OF CITYWIDE ADMINISTRATIVE SERVICES
MANHATTAN MUNICIPAL BUILDING
ONE CENTER STREET, 17 FLOOR SOUTH;
NEW YORK, NEW YORK 10007

MANAGING AGENCY:
DEPARTMENT OF DESIGN AND CONSTRUCTION
30-30 THOMSON AVENUE;
LONG ISLAND CITY, NEW YORK 10007

ARCHITECT:
NANDINEE PHOOKAN ARCHITECT
45 MAIN STREET SUITE #620
BROOKLYN NY 11201
P: 718 643 9500

STRUCTURAL ENGINEER:
LERA CONSULTING STRUCTURAL ENGINEERS
40 WALL STREET, FLOOR 23
NEW YORK, NY 10005
P: 212 750 9000

MEP ENGINEER:
DEWBERRY ENGINEERS
132 WEST 31ST STREET, SUITE 301
NEW YORK, NEW YORK 10001
P: 646 434 2822

PLUMBING ENGINEER:
AXON ENGINEERING SERVICES, LLC
222 OUTWATER LN, SUITE 3A
GARFIELD, NJ 07026
p: 917 677 2484

KEY PLAN:

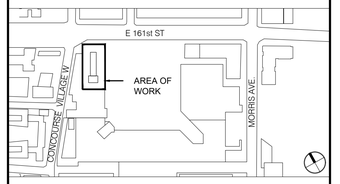

REVISIONS:

NUMBER	DESCRIPTION	DATE
	ISSUED FOR BID	01-27-2026

Department of Design and Construction

DIVISION OF PUBLIC BUILDINGS

CAPITAL PROJECT NUMBER:
PW77198CT

PROJECT
198 E 161ST STREET COOLING TOWER REPLACEMENT
198 E 161ST ST
BRONX, NY 10451

FOR THE:
Department of Citywide Administrative Services (DCAS)

DOB NOW APPLICATION: X01141830-I1

DRAWING TITLE:
PENTHOUSE MER PLAN AND ELEVATION

SEAL & SIGNATURE

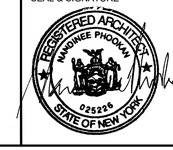

DATE:	5 December, 2025
PROJECT NO:	22_01
DRAWN BY:	AD
CHECKED BY:	NP/AA
DRAWING NUMBER:	A-110.00
CADO FILE No:	00 OF 00

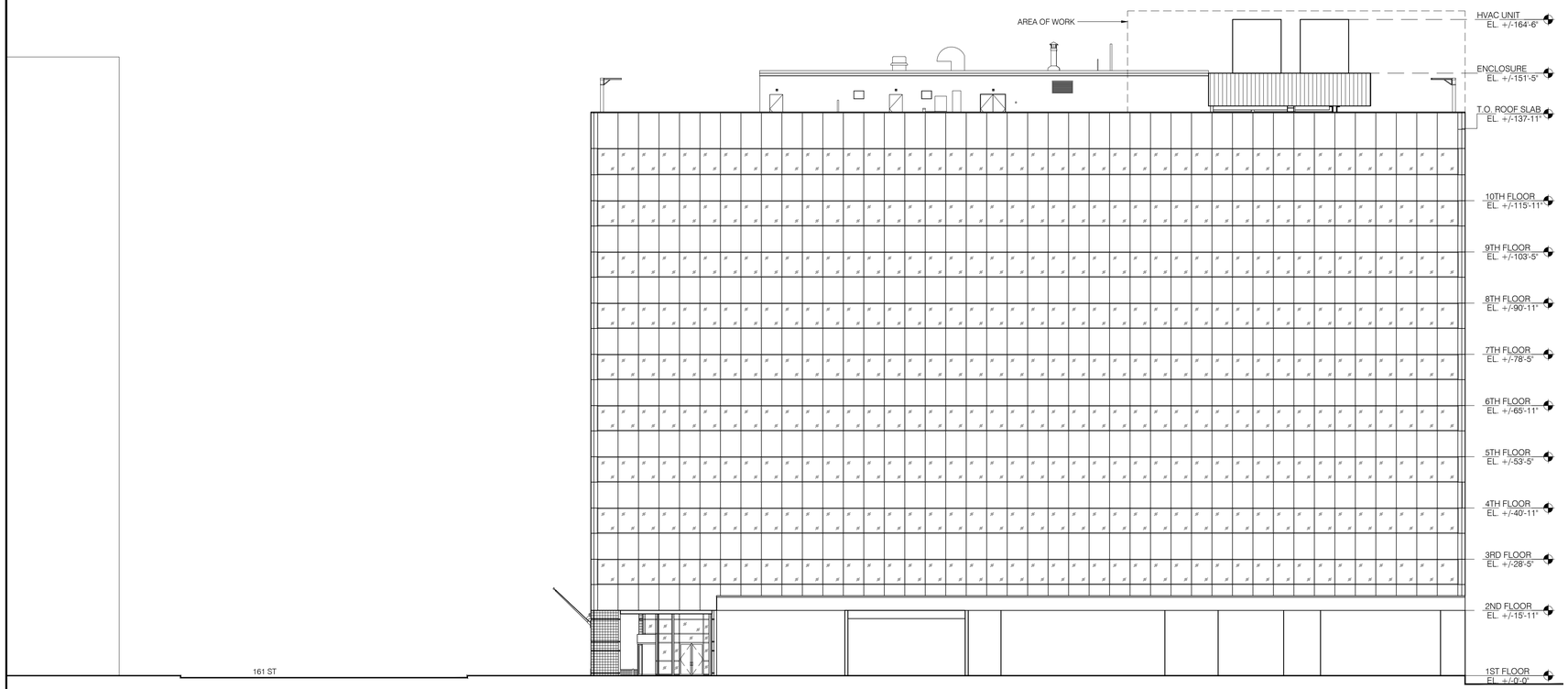

01 WEST ELEVATION
SCALE: 1/16"=1'-0"

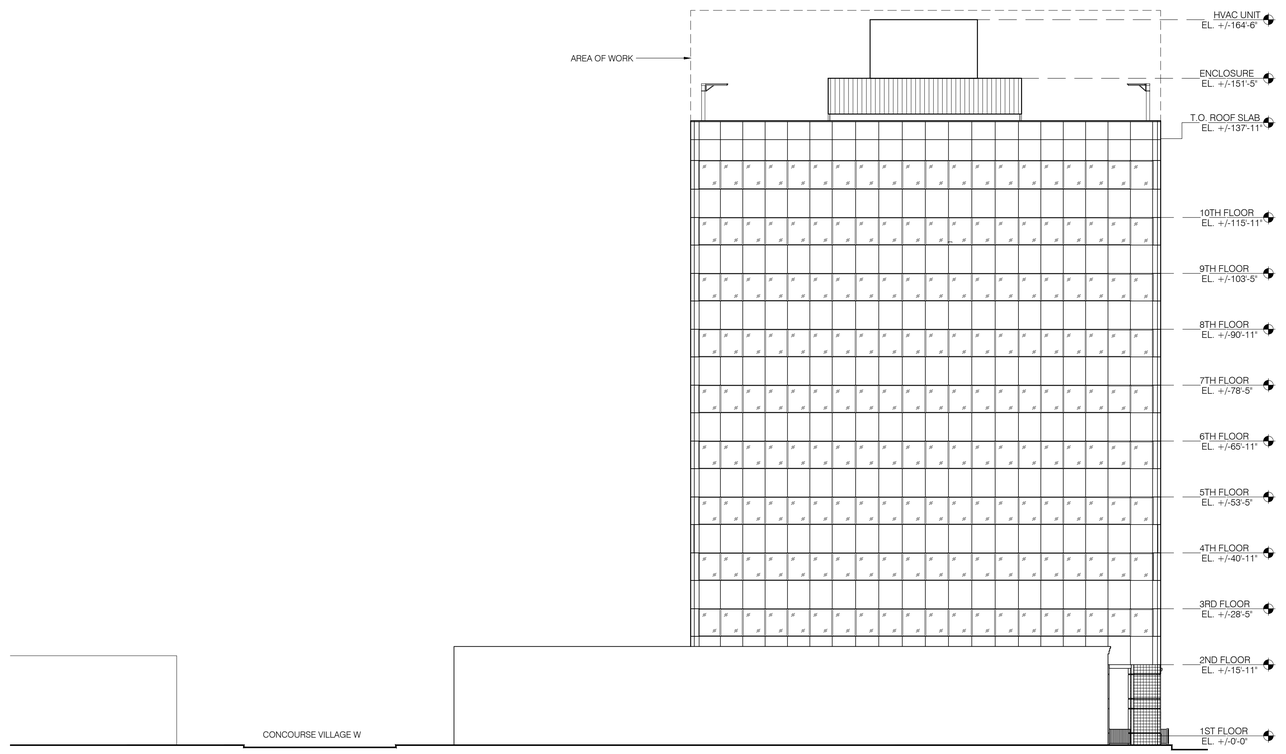

02 SOUTH ELEVATION
SCALE: 1/16"=1'-0"

COOLING TOWER REPLACEMENT

BRONX DISTRICT ATTORNEY'S OFFICE
198 E 161ST STREET
NEW YORK, NEW YORK 10451

SPONSOR AGENCY:
DEPARTMENT OF CITYWIDE ADMINISTRATIVE SERVICES
MANHATTAN MUNICIPAL BUILDING
ONE CENTER STREET, 17 FLOOR SOUTH;
NEW YORK, NEW YORK 10007

MANAGING AGENCY:
DEPARTMENT OF DESIGN AND CONSTRUCTION
30-30 THOMSON AVENUE;
LONG ISLAND CITY, NEW YORK 10007

ARCHITECT:
NANDINEE PHOOKAN ARCHITECT
45 MAIN STREET SUITE #620
BROOKLYN NY 11201
P: 718 643 9500

STRUCTURAL ENGINEER:
LERA CONSULTING STRUCTURAL ENGINEERS
40 WALL STREET, FLOOR 23
NEW YORK, NY 10005
P: 212 750 9000

MEP ENGINEER:
DEWBERRY ENGINEERS
132 WEST 31ST STREET, SUITE 301
NEW YORK, NEW YORK 10001
P: 646 434 2822

PLUMBING ENGINEER:
AXON ENGINEERING SERVICES, LLC
222 OUTWATER LN, SUITE 3A
GARFIELD, NJ 07026
p: 917 677 2484

KEY PLAN:

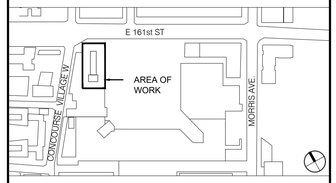

REVISIONS:

NUMBER	DESCRIPTION	DATE
	ISSUED FOR BID	01-27-2026

Department of Design and Construction

DIVISION OF PUBLIC BUILDINGS

CAPITAL PROJECT NUMBER:
PW77198CT

PROJECT
198 E 161ST STREET COOLING TOWER REPLACEMENT
198 E 161ST ST
BRONX, NY 10451

FOR THE:
Department of Citywide Administrative Services (DCAS)

DOB NOW APPLICATION: X01141830-I1

DRAWING TITLE:
BUILDING ELEVATIONS

DOB APPROVAL STAMP

SEAL & SIGNATURE

REGISTERED ARCHITECT NANDINEE PHOOKAN 025226 STATE OF NEW YORK

DATE:	5 December, 2025
PROJECT NO:	22_01
DRAWN BY:	AD
CHECKED BY:	NP/AA
DRAWING NUMBER:	A-200.00
CADO FILE No:	00 OF 00

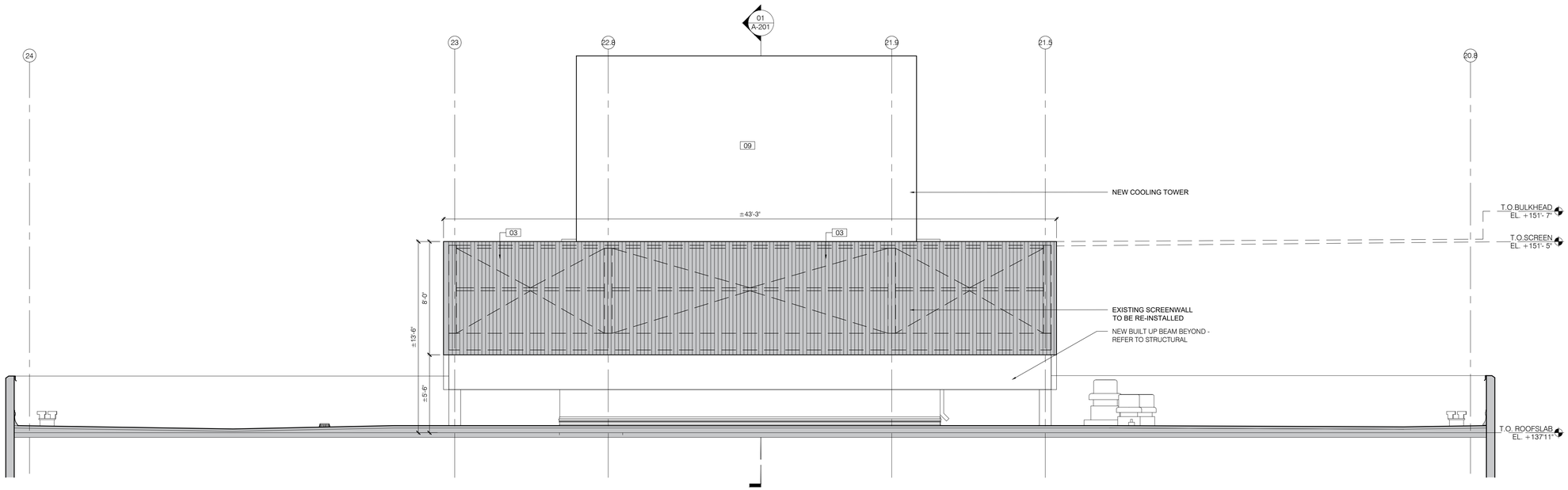

01 ELEVATION OF SCREEN WALL @ COOLING TOWER ROOF

SCALE: 1/4"=1'-0"

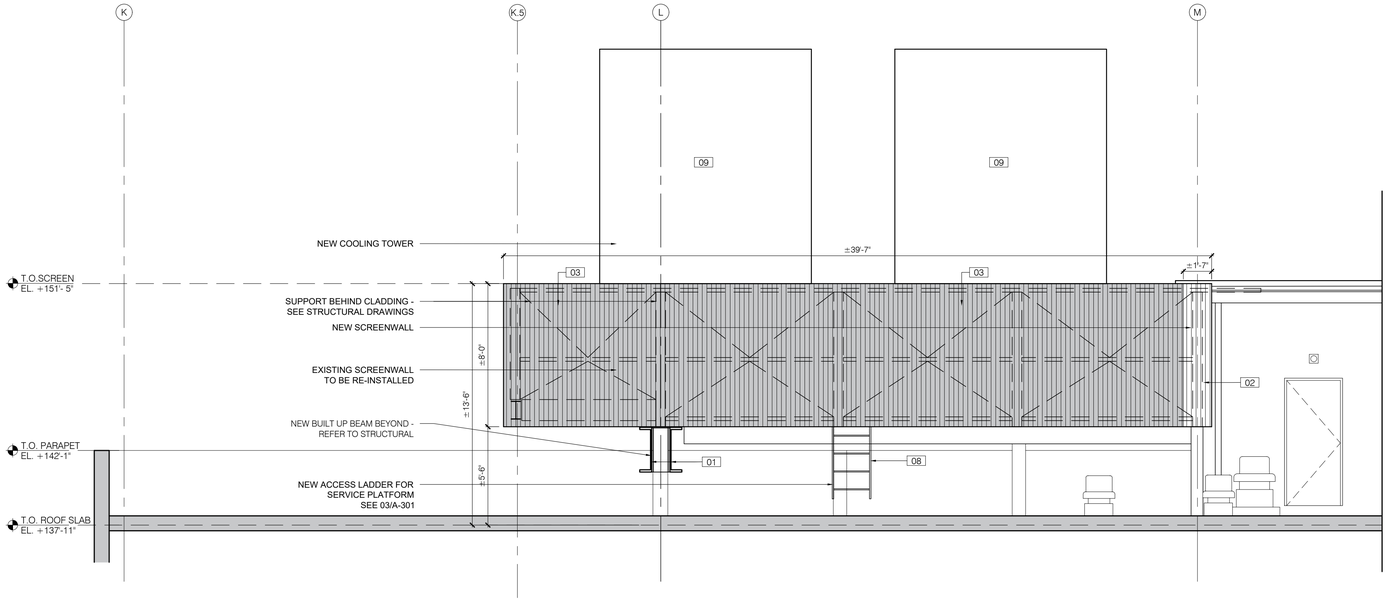

02 ELEVATION OF SCREEN WALL @ COOLING TOWER ROOF

SCALE: 1/4"=1'-0"

EXISTING TO REMAIN

PROPOSED KEYNOTES	
01	STRUCTURAL STEEL - PAINTED
02	ALUMINUM SCREEN - FACTORY FINISHED. CONSTRUCTION SPECIALITIES VERT-A-CADE 500
03	ALUMINUM SCREEN - SALVAGED AND REINSTALLED (C.S. VERT-A-CADE 500)
04	CMU WALL - CLEANED, PRIMED, AND PAINTED
05	CMU INFILL - PRIMED AND PAINTED
06	STEEL BAR GRATING - HDG STEEL
07	42" HIGH GUARDRAIL - HDG STEEL
08	STEEL ACCESS LADDER AND SWING GATE - HDG STEEL
09	CLOSED-CELL COOLING TOWER - SEE MECHANICAL DRAWINGS
10	REPLACEMENT ALUMINUM LOUVER/ DAMPER

DOB APPROVAL STAMP

COOLING TOWER REPLACEMENT

BRONX DISTRICT ATTORNEY'S OFFICE
198 E 161ST STREET
NEW YORK, NEW YORK 10451

SPONSOR AGENCY:
DEPARTMENT OF CITYWIDE ADMINISTRATIVE SERVICES
MANHATTAN MUNICIPAL BUILDING
ONE CENTER STREET, 17 FLOOR SOUTH;
NEW YORK, NEW YORK 10007

MANAGING AGENCY:
DEPARTMENT OF DESIGN AND CONSTRUCTION
30-30 THOMSON AVENUE;
LONG ISLAND CITY, NEW YORK 10007

ARCHITECT:
NANDINEE PHOOKAN ARCHITECT
45 MAIN STREET SUITE #620
BROOKLYN NY 11201
P: 718 643 9500

STRUCTURAL ENGINEER:
LERA CONSULTING STRUCTURAL ENGINEERS
40 WALL STREET, FLOOR 23
NEW YORK, NY 10005
P: 212 750 9000

MEP ENGINEER:
DEWBERRY ENGINEERS
132 WEST 31ST STREET, SUITE 301
NEW YORK, NEW YORK 10001
P: 646 434 2822

PLUMBING ENGINEER:
AXON ENGINEERING SERVICES, LLC
222 OUTWATER LN, SUITE 3A
GARFIELD, NJ 07026
p: 917 677 2484

KEY PLAN:

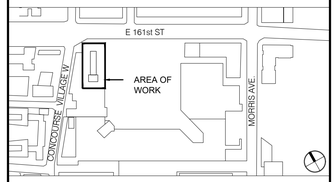

REVISIONS:

NUMBER	DESCRIPTION	DATE
	ISSUED FOR BID	01-27-2026

NYC DDC **Department of Design and Construction**

DIVISION OF PUBLIC BUILDINGS

CAPITAL PROJECT NUMBER:
PW77198CT

PROJECT
198 E 161ST STREET COOLING TOWER REPLACEMENT
198 E 161ST ST
BRONX, NY 10451

FOR THE:
Department of Citywide Administrative Services (DCAS)

DOB NOW APPLICATION: X01141830-I1

DRAWING TITLE:
ROOF ELEVATIONS

SEAL & SIGNATURE



DATE:	5 December, 2025
PROJECT NO:	22_01
DRAWN BY:	AD
CHECKED BY:	NP/AA
DRAWING NUMBER:	A-201.00
CADO FILE No:	00 OF 00

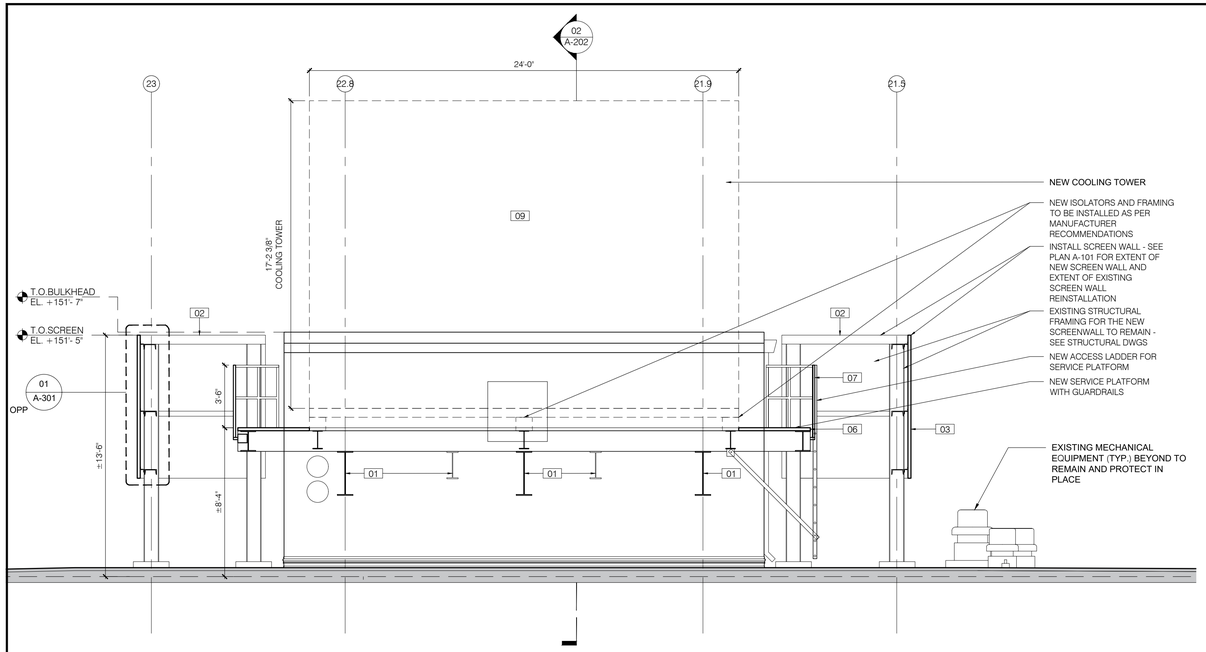

01 SECTION THRU COOLING TOWER

SCALE: 1/4"=1'-0"

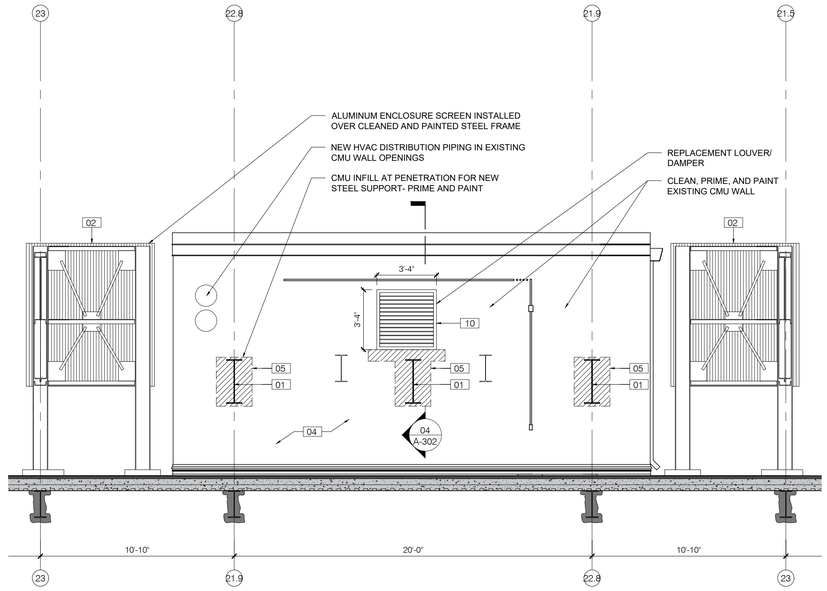

03 PROPOSED ELEVATION OF PENTHOUSE WALL

SCALE: 1/4"=1'-0"

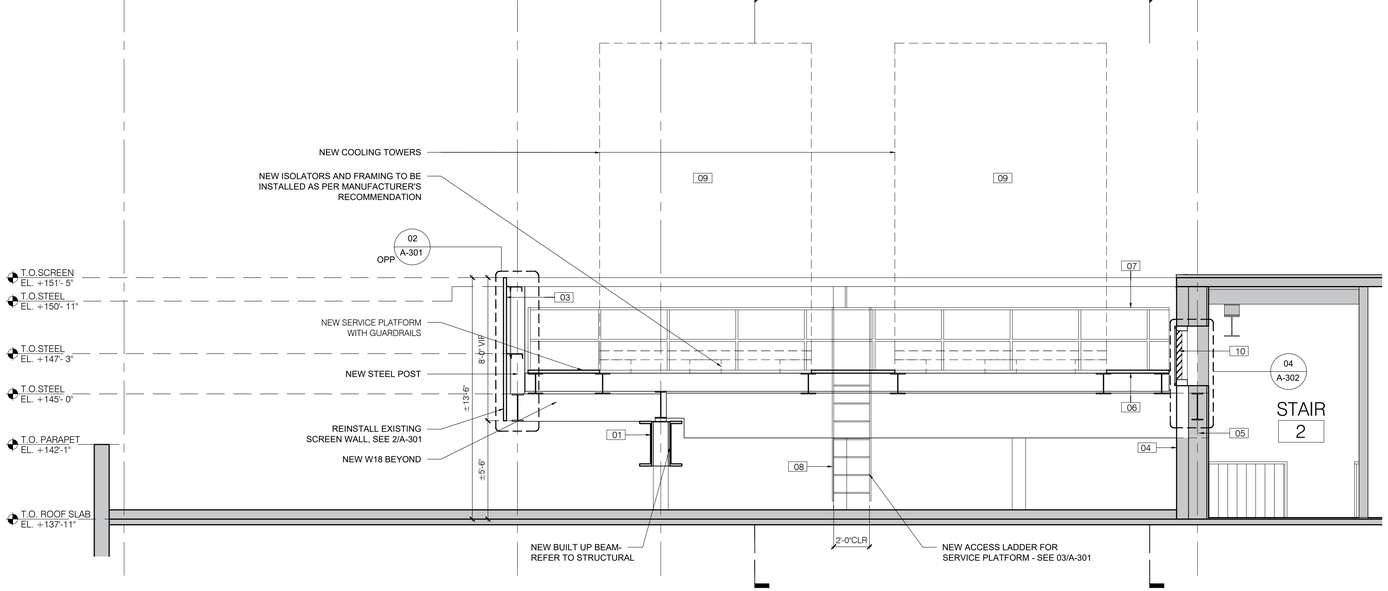

02 SECTION THRU COOLING TOWER

SCALE: 1/4"=1'-0"

EXISTING TO REMAIN

PROPOSED KEYNOTES	
01	STRUCTURAL STEEL - PAINTED
02	ALUMINUM SCREEN - FACTORY FINISHED, CONSTRUCTION SPECIALITIES VERT-A-CADE 500
03	ALUMINUM SCREEN - SALVAGED AND REINSTALLED (C.S. VERT-A-CADE 500)
04	CMU WALL - CLEANED, PRIMED, AND PAINTED
05	CMU INFILL - PRIMED AND PAINTED
06	STEEL BAR GRATING - HDG STEEL
07	42" HIGH GUARDRAIL - HDG STEEL
08	STEEL ACCESS LADDER AND SWING GATE - HDG STEEL
09	CLOSED-CELL COOLING TOWER - SEE MECHANICAL DRAWINGS
10	REPLACEMENT ALUMINUM LOUVER/ DAMPER

DOB APPROVAL STAMP

COOLING TOWER REPLACEMENT

BRONX DISTRICT ATTORNEY'S OFFICE
198 E 161ST STREET
NEW YORK, NEW YORK 10451

SPONSOR AGENCY:
DEPARTMENT OF CITYWIDE ADMINISTRATIVE SERVICES
MANHATTAN MUNICIPAL BUILDING
ONE CENTER STREET, 17 FLOOR SOUTH;
NEW YORK, NEW YORK 10007

MANAGING AGENCY:
DEPARTMENT OF DESIGN AND CONSTRUCTION
30-30 THOMSON AVENUE;
LONG ISLAND CITY, NEW YORK 10007

ARCHITECT:
NANDINEE PHOOKAN ARCHITECT
45 MAIN STREET SUITE #620
BROOKLYN NY 11201
P: 718 643 9500

STRUCTURAL ENGINEER:
LERA CONSULTING STRUCTURAL ENGINEERS
40 WALL STREET, FLOOR 23
NEW YORK, NY 10005
P: 212 750 9000

MEP ENGINEER:
DEWBERRY ENGINEERS
132 WEST 31ST STREET, SUITE 301
NEW YORK, NEW YORK 10001
P: 646 434 2822

PLUMBING ENGINEER:
AXON ENGINEERING SERVICES, LLC
222 OUTWATER LN, SUITE 3A
GARFIELD, NJ 07026
p: 917 677 2484

KEY PLAN:

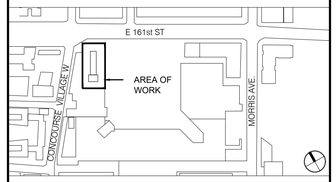

REVISIONS:

NUMBER	DESCRIPTION	DATE
	ISSUED FOR BID	01-27-2026

Department of Design and Construction

DIVISION OF PUBLIC BUILDINGS

CAPITAL PROJECT NUMBER:
PW77198CT

PROJECT
198 E 161ST STREET COOLING TOWER REPLACEMENT
198 E 161ST ST
BRONX, NY 10451

FOR THE:
Department of Citywide Administrative Services (DCAS)

DOB NOW APPLICATION: X01141830-I1

DRAWING TITLE:
ROOF SECTIONS

SEAL & SIGNATURE



DATE:	5 December, 2025
PROJECT NO:	22_01
DRAWN BY:	AD
CHECKED BY:	NP/AA
DRAWING NUMBER:	A-202.00
CADO FILE No:	
	00 OF 00

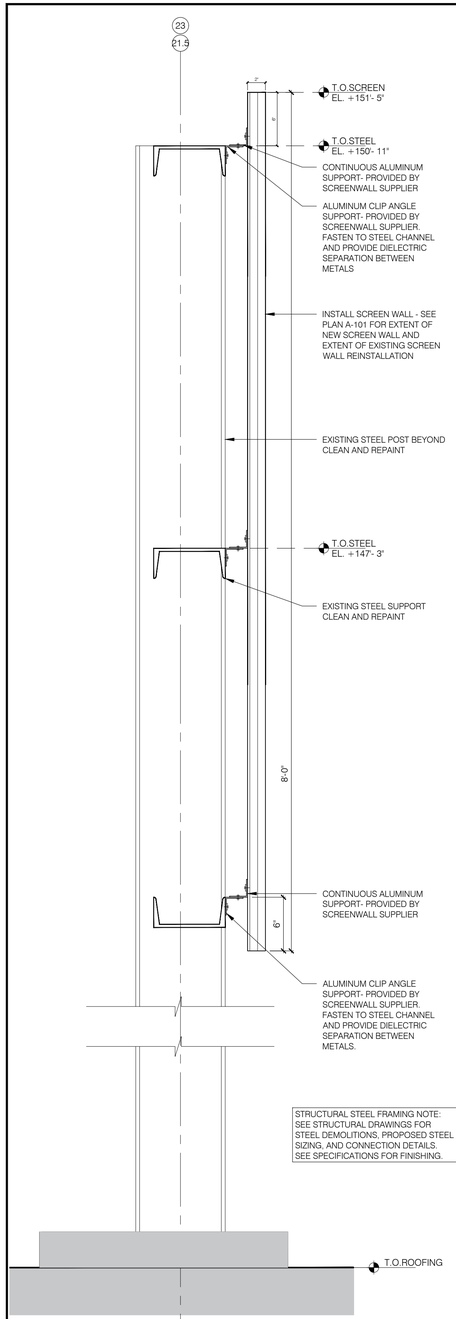

01 SCREENWALL DETAIL AT EXISTING STEEL SUPPORT
SCALE: 1-1/2" = 1'-0"

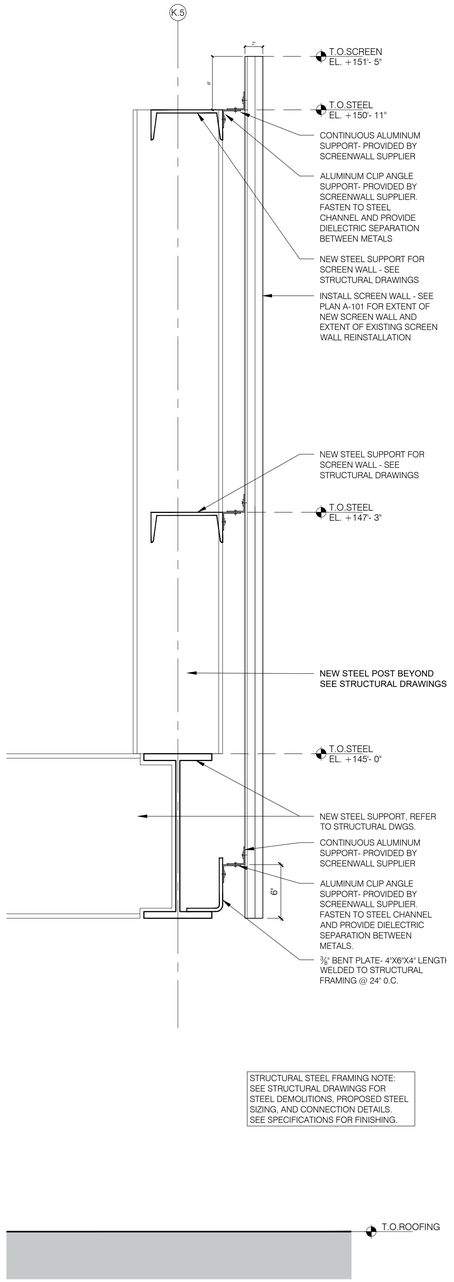

02 SCREENWALL DETAIL AT NEW STEEL SUPPORT
SCALE: 1-1/2" = 1'-0"

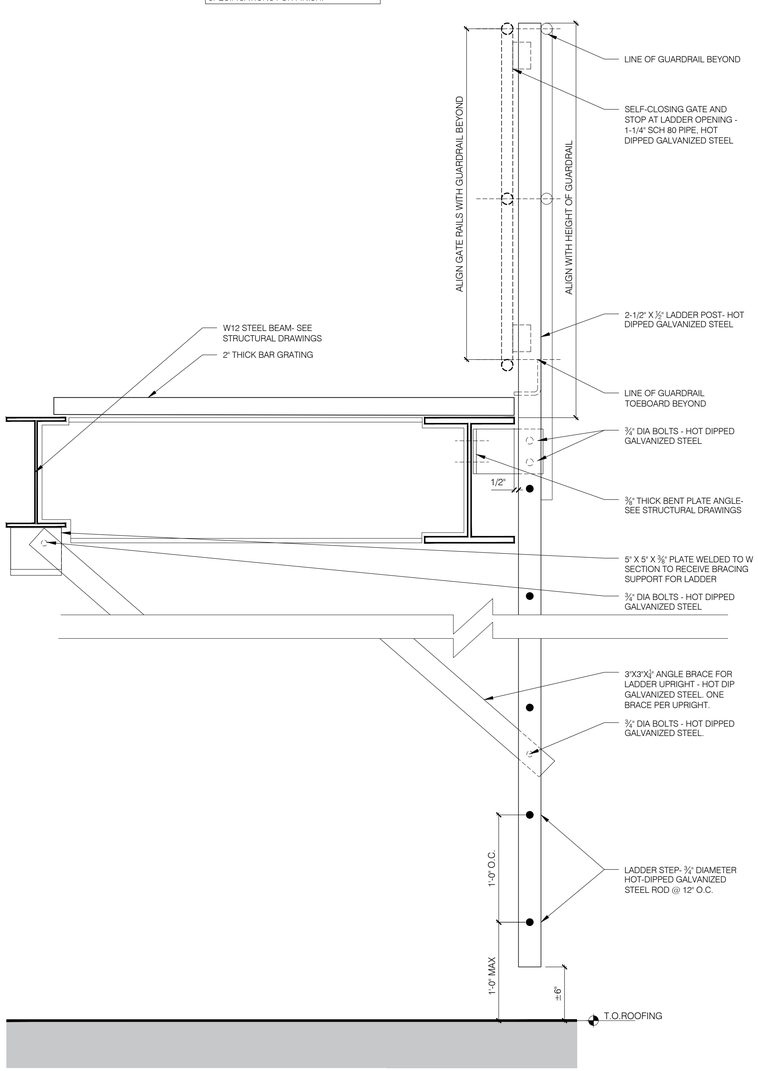

03 LADDER CONNECTION DETAIL
SCALE: 1-1/2" = 1'-0"

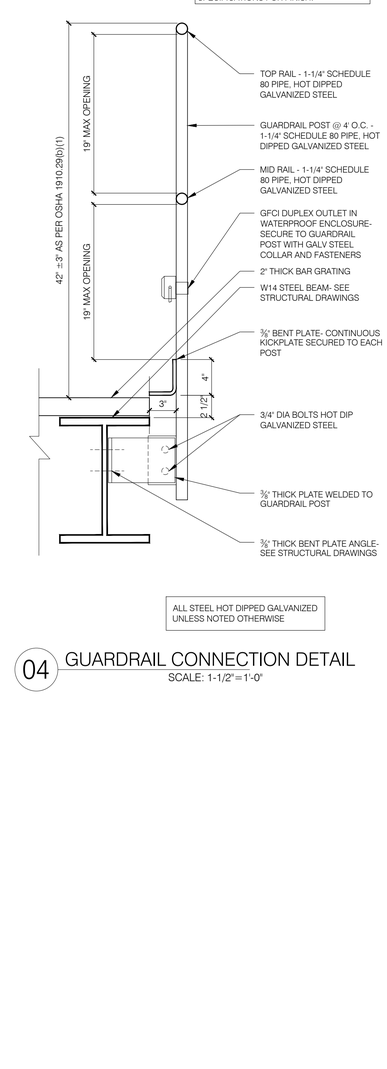

04 GUARDRAIL CONNECTION DETAIL
SCALE: 1-1/2" = 1'-0"

COOLING TOWER REPLACEMENT

BRONX DISTRICT ATTORNEY'S OFFICE
198 E 161ST STREET
NEW YORK, NEW YORK 10451

SPONSOR AGENCY:
DEPARTMENT OF CITYWIDE ADMINISTRATIVE SERVICES
MANHATTAN MUNICIPAL BUILDING
ONE CENTER STREET, 17 FLOOR SOUTH;
NEW YORK, NEW YORK 10007

MANAGING AGENCY:
DEPARTMENT OF DESIGN AND CONSTRUCTION
30-30 THOMSON AVENUE;
LONG ISLAND CITY, NEW YORK 10007

ARCHITECT:
NANDINEE PHOOKAN ARCHITECT
45 MAIN STREET SUITE #620
BROOKLYN NY 11201
P: 718 643 9500

STRUCTURAL ENGINEER:
LERA CONSULTING STRUCTURAL ENGINEERS
40 WALL STREET, FLOOR 23
NEW YORK, NY 10005
P: 212 750 9000

MEP ENGINEER:
DEWBERRY ENGINEERS
132 WEST 31ST STREET, SUITE 301
NEW YORK, NEW YORK 10001
P: 646 434 2822

PLUMBING ENGINEER:
AXON ENGINEERING SERVICES, LLC
222 OUTWATER LN, SUITE 3A
GARFIELD, NJ 07026
p: 917 677 2484

KEY PLAN:

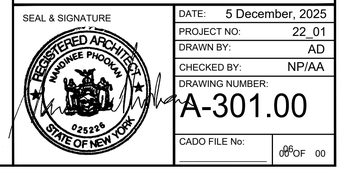

REVISIONS:

NUMBER	DESCRIPTION	DATE
	ISSUED FOR BID	01-27-2026

Department of Design and Construction

DIVISION OF PUBLIC BUILDINGS

CAPITAL PROJECT NUMBER:
PW77198CT

PROJECT
198 E 161ST STREET COOLING TOWER REPLACEMENT
198 E 161ST ST
BRONX, NY 10451

FOR THE:
Department of Citywide Administrative Services (DCAS)

DOB NOW APPLICATION: X01141830-I1

DRAWING TITLE:
ROOF DETAILS

DOB APPROVAL STAMP

SEAL & SIGNATURE

DATE:	5 December, 2025
PROJECT NO:	22_01
DRAWN BY:	AD
CHECKED BY:	NP/AA
DRAWING NUMBER:	A-301.00
CADO FILE No:	06

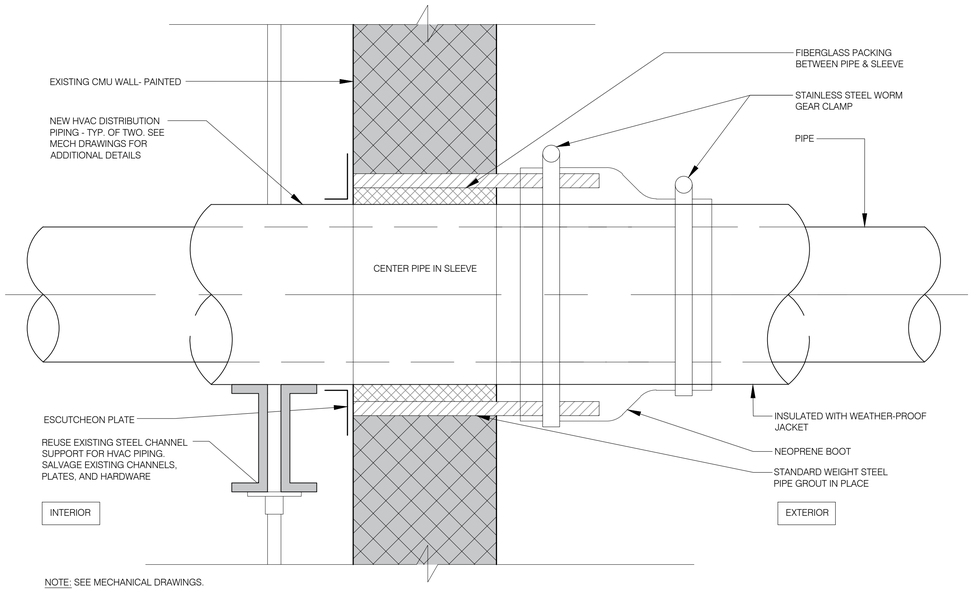

NOTE: SEE MECHANICAL DRAWINGS.

01 HORIZONTAL PIPE PENETRATION DETAIL FOR COOLING TOWER DISTRIBUTION
SCALE: 3"=1'-0"

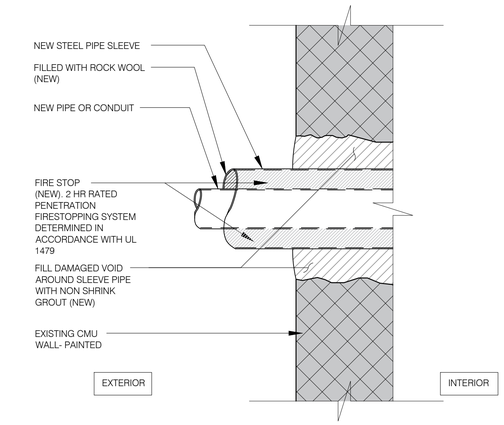

02 HORIZONTAL PIPE PENETRATION DETAIL
SCALE: 3"=1'-0"

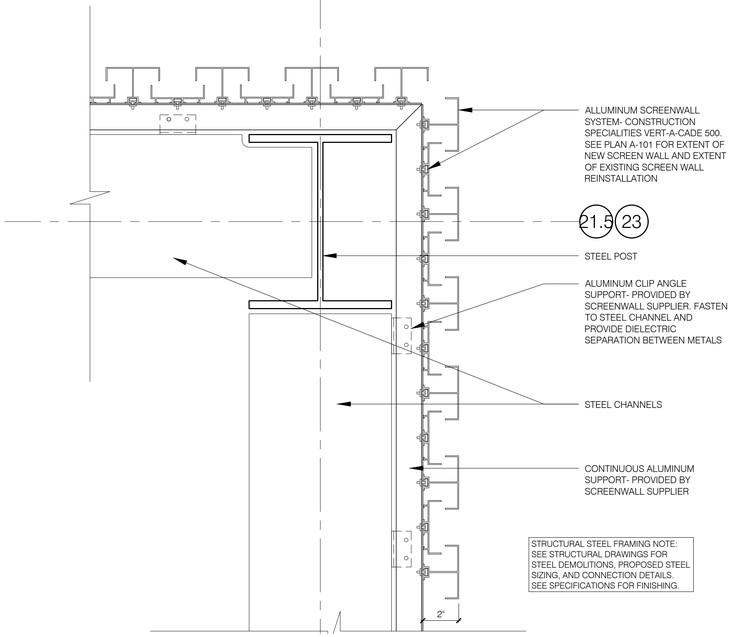

03 ENLARGED PLAN DETAIL OF SCREENWALL
SCALE: 3"=1'-0"

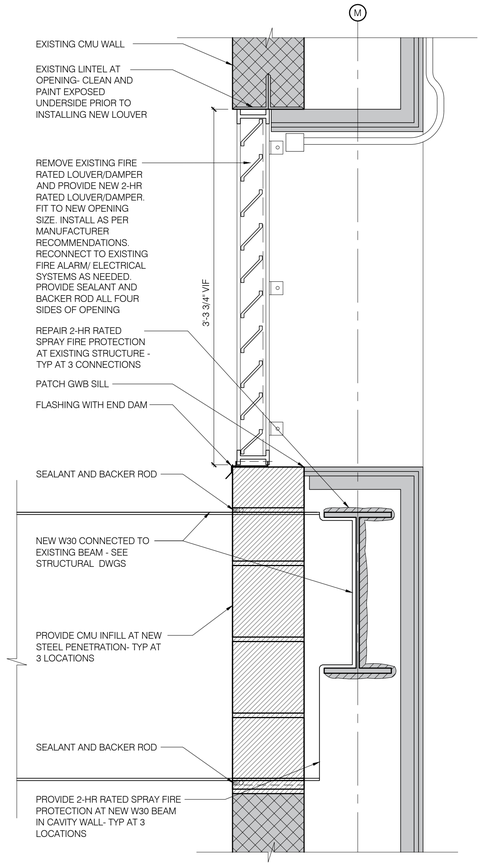

04 DETAIL SECTION THROUGH LOUVER/ DAMPER
SCALE: 1-1/2"=1'-0"

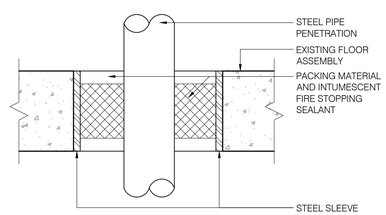

05 NEW FLOOR PENETRATION DETAIL
SCALE: 3"=1'-0"

DOB APPROVAL STAMP

COOLING TOWER REPLACEMENT

BRONX DISTRICT ATTORNEY'S OFFICE
198 E 161ST STREET
NEW YORK, NEW YORK 10451

SPONSOR AGENCY:
DEPARTMENT OF CITYWIDE ADMINISTRATIVE SERVICES
MANHATTAN MUNICIPAL BUILDING
ONE CENTER STREET, 17 FLOOR SOUTH;
NEW YORK, NEW YORK 10007

MANAGING AGENCY:
DEPARTMENT OF DESIGN AND CONSTRUCTION
30-30 THOMSON AVENUE;
LONG ISLAND CITY, NEW YORK 10007

ARCHITECT:
NANDINEE PHOOKAN ARCHITECT
45 MAIN STREET SUITE #620
BROOKLYN NY 11201
P: 718 643 9500

STRUCTURAL ENGINEER:
LERA CONSULTING STRUCTURAL ENGINEERS
40 WALL STREET, FLOOR 23
NEW YORK, NY 10005
P: 212 750 9000

MEP ENGINEER:
DEWBERRY ENGINEERS
132 WEST 31ST STREET, SUITE 301
NEW YORK, NEW YORK 10001
P: 646 434 2822

PLUMBING ENGINEER:
AXON ENGINEERING SERVICES, LLC
222 OUTWATER LN, SUITE 3A
GARFIELD, NJ 07026
p: 917 677 2484

KEY PLAN:

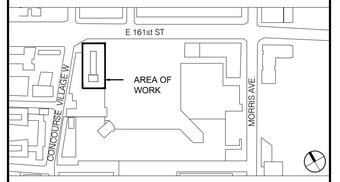

REVISIONS:

NUMBER	DESCRIPTION	DATE
	ISSUED FOR BID	01-27-2026

Department of Design and Construction

DIVISION OF PUBLIC BUILDINGS

CAPITAL PROJECT NUMBER:
PW77198CT

PROJECT
198 E 161ST STREET COOLING TOWER REPLACEMENT
198 E 161ST ST
BRONX, NY 10451

FOR THE:
Department of Citywide Administrative Services (DCAS)

DOB NOW APPLICATION: X01141830-I1

DRAWING TITLE:
ROOF DETAILS

SEAL & SIGNATURE



DATE:	5 December, 2025
PROJECT NO:	22_01
DRAWN BY:	AD
CHECKED BY:	NP/AA
DRAWING NUMBER:	A-302.00
CADO FILE No:	06 00 OF 00

THE SITE IS NOT IN A FLOOD ZONE. IT IS LOCATED IN ZONE X "AREA DETERMINED TO BE OUTSIDE FHT 0.2% ANNUAL CHANCE FLOOR PLAIN"

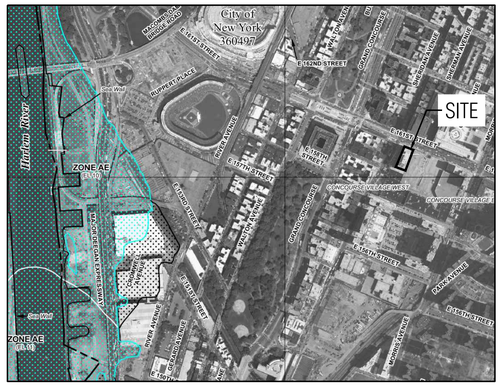



RELATED JOB APPLICATIONS

ARCHITECTURAL	#X01141830-I1
MECHANICAL	#X01141830-S2
PLUMBING	#X01141830-S3

BUILDING CODE REFERENCES

1. ALL WORK SHALL CONFORM TO THE REQUIREMENTS OF THE 2022 BUILDING CODE OF THE CITY OF NEW YORK, WITH ALL APPLICABLE ADDENDA AND SUPPLEMENTS, HEREINAFTER REFERRED TO AS BUILDING CODE, AND TO THE REGULATIONS OF ALL GOVERNMENTAL AGENCIES HAVING JURISDICTION, WITH THE EXCEPTION THAT, WHERE PERMITTED UNDER SECTION 28-101.4.3 OF THE 2022 BUILDING CODE, WORK ON PRIOR CODE BUILDINGS MAY BE PERFORMED IN ACCORDANCE WITH THE REQUIREMENTS AND STANDARDS SET FORTH IN THE 1968 BUILDING CODE.

SPECIAL INSPECTIONS

1. SPECIAL INSPECTION SHALL BE PERFORMED PER CHAPTER 17 OF THE 2022 BUILDING CODE OF THE CITY OF NEW YORK FOR ALL REQUIRED STRUCTURAL ITEMS INCLUDING:

SPECIAL INSPECTION ITEMS	CODE/SECTION
STRUCTURAL STEEL – WELDING	BC 1705.2.1
STRUCTURAL STEEL – DETAILS	BC 1705.2.2
STRUCTURAL STEEL – HIGH STRENGTH "BOLTING	BC 1705.2.3
STRUCTURAL STABILITY – EXISTING BUILDINGS	BC 1705.25

DRAWING LIST - STRUCTURAL

SHEET NUMBER	SHEET NAME
S-000.00	PROJECT INFORMATION
S-001.00	STANDARD ABBREVIATIONS
S-002.00	GENERAL STRUCTURAL NOTES
S-003.00	STRUCTURAL DESIGN CRITERIA
DMS-101.00	EXISTING MAIN ROOF/BULKHEAD PLAN
DMS-102.00	EXISTING ROOFTOP DUNNAGE PART PLANS AND ELEVATIONS
DMS-300.00	ROOF DUNNAGE DEMOLITION ELEVATIONS AND SECTIONS
S-102.00	ROOFTOP DUNNAGE PART PLANS AND ELEVATIONS
S-300.00	ROOFTOP DUNNAGE SECTIONS
S-400.00	CONNECTION TYPICAL DETAILS
S-401.00	CONNECTION TYPICAL DETAILS
S-500.00	SECTIONS AND DETAILS
S-501.00	SECTIONS AND DETAILS

ZONING AND BUILDING INFORMATION

APPLICABLE CODES AND REGULATIONS:

• ZONING REGULATIONS:	NYC ZONING REGULATIONS
• BUILDING CODE:	2022 NYC BUILDING CODE
• ENERGY CODE:	2020 NYC ENERGY CONSERVATION CODE

BUILDING DATA SUMMARY:

BLOCK:	2443
LOT:	94
ZONING DISTRICT:	C6-2
COMMUNITY BOARD:	BRONX 04
LOT AREA:	36,219 SF
BUILDING AREA:	233,647 SF
NO OF STORIES:	10 + CELLAR AND SUB CELLAR
BUILDING HEIGHT:	147'
OCCUPANCY CLASSIFICATION:	B, BUSINESS (2022 CODE)
CONSTRUCTION CLASSIFICATION:	I-B (NON COMBUSTIBLE)
FLOOD ZONE:	NOT APPLICABLE
DEP GREEN INFRASTRUCTURE:	CITYWIDE OR OPEN WATERS

PROJECT INFORMATION

THE 10 STORY BUILDING, LOCATED ON 198 E 161ST STREET IN BRONX, NY, IS OWNED BY THE NEW YORK CITY DEPARTMENT OF CITYWIDE ADMINISTRATIVE SERVICES (DCAS) AND HOUSES THE OFFICES OF THE BRONX DISTRICT ATTORNEY. THE ROOF BULKHEAD CONSISTS OF THE ELEVATOR MACHINE ROOM, A MECHANICAL EQUIPMENT ROOM HOUSING TWO BOILERS, COMPRESSORS AND PUMPS. TWO COOLING TOWERS ARE LOCATED ON THE ROOF ON STEEL DUNNAGE, ENCLOSED ON ALL THREE SIDES BY A SCREEN ENCLOSURE. THE PROJECT CONSISTS OF THE PHASED REPLACEMENT OF THE EXISTING 2 CELL OPEN COOLING TOWERS WITH NEW 2 CELL CLOSED LOOP COOLING TOWERS AND ASSOCIATED PUMPS.

STRUCTURAL SCOPE OF WORK SUMMARY

THE EXISTING SUPERSTRUCTURE CONSISTS OF CONCRETE SLAB ON METAL DECK FLOORS SUPPORTED ON STEEL BEAMS AND GIRDERS, WHICH ARE CONNECTED TO AND SUPPORTED BY STEEL COLUMNS. VERTICAL STEEL BRACED FRAMES, EXTENDING THE HEIGHT OF THE STRUCTURE, ARE LOCATED AROUND THE BUILDING CORE. THE BASE OF THE COLUMNS ARE SUPPORTED BY CONCRETE PIERS AND FOOTINGS.

THE STRUCTURAL DRAWINGS PROVIDED, DESCRIBE SELECTIVE DEMOLITION AND ALTERATIONS TO THE EXISTING ROOFTOP STEEL SCREEN WALL AND DUNNAGE, AND NEW STEEL DUNNAGE, AND ACCESS PLATFORM, WHICH WILL BE SUPPORTED BY THE EXISTING STRUCTURE, AND WILL SUPPORT THE NEW COOLING TOWER UNITS. THESE DRAWINGS ARE IS FILED FOR STRUCTURAL APPLICATION #X01141830-S1 ONLY.

© Copyright LERA CONSULTING STRUCTURAL ENGINEERS, R.L.L.P.

WARNING: IT IS A VIOLATION OF LAW FOR ANY PERSON, UNLESS ACTING UNDER THE DIRECTION OF A PROFESSIONAL, LICENSED IN THE STATE OF THIS PROJECT, TO ALTER IN ANY WAY THESE DRAWINGS. WHERE ANY ITEM IS ALTERED, THE SUPERVISING PROFESSIONAL SHALL AFFIX TO THE ITEM HIS SEAL AND THE INSCRIPTION "ALTERED BY" FOLLOWED BY HIS SIGNATURE, THE DATE, AND A SPECIFIC DESCRIPTION OF THE ALTERATION.

DOB APPROVAL STAMP

COOLING TOWER REPLACEMENT

BRONX DISTRICT ATTORNEY'S OFFICE
198 E 161ST STREET
NEW YORK, NEW YORK 10451

SPONSOR AGENCY:
DEPARTMENT OF CITYWIDE ADMINISTRATIVE SERVICES
MANHATTAN MUNICIPAL BUILDING
ONE CENTER STREET, 17 FLOOR SOUTH;
NEW YORK, NEW YORK 10007

MANAGING AGENCY:
DEPARTMENT OF DESIGN AND CONSTRUCTION
30-30 THOMSON AVENUE;
LONG ISLAND CITY, NEW YORK 10007

ARCHITECT:
NANDINEE PHOOKAN ARCHITECT
45 MAIN STREET SUITE #620
BROOKLYN NY 11201
P: 718.643.9500

STRUCTURAL ENGINEER:
LERA CONSULTING STRUCTURAL ENGINEERS
40 WALL STREET, FLOOR 23
NEW YORK, NY 10005
P: 212 750 9000

MEP ENGINEER:
DEWBERRY ENGINEERS
132 WEST 31ST STREET, SUITE 301
NEW YORK, NEW YORK 10001
P: 646 434 2822

PLUMBING ENGINEER:
AXON ENGINEERING SERVICES, LLC
222 OUTWATER LN, SUITE 3A
GARFIELD, NJ 07026
p: 917 677 2484

KEY PLAN:

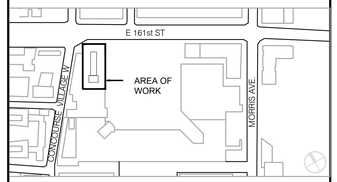

REVISIONS:

NUMBER	DESCRIPTION	DATE
	ISSUE FOR BID	01-27-2026

Department of Design and Construction

DIVISION OF PUBLIC BUILDINGS

CAPITAL PROJECT NUMBER:
PW77198CT

PROJECT
198 E 161ST STREET COOLING TOWER REPLACEMENT
198 E 161ST ST
BRONX, NY 10451

FOR THE:
Department of Citywide Administrative Services (DCAS)

DOB NOW APPLICATION: X01141830-I1

DRAWING TITLE:
PROJECT INFORMATION

SEAL & SIGNATURE

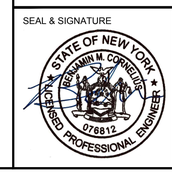

DATE:	05 DECEMBER 2025
PROJECT NO:	P1842
DRAWN BY:	LERA
CHECKED BY:	LERA
DRAWING NUMBER:	S-000.00
CADO FILE No:	

STANDARD ABBREVIATIONS

THE LIST OF ABBREVIATIONS GIVEN BELOW IS NOT COMPREHENSIVE; THESE ABBREVIATIONS MAY OR MAY NOT BE INCORPORATED INTO THE CONTRACT DOCUMENTS AND ABBREVIATIONS NOT LISTED MAY BE USED. PERIODS MAY OR MAY NOT BE SHOWN AFTER THE ABBREVIATION.

ABBREVIATIONS ARE GIVEN USUALLY FOR THE SINGULAR CASE – FOR THE PLURAL CASE, THE SAME ABBREVIATION WITHOUT ADDING THE 'S' MAY BE USED. WHILE UPPER CASE LETTERS ARE SHOWN, EITHER UPPER CASE OR LOWER CASE LETTERS MAY BE USED IN SPECIFICATIONS.

THE FOLLOWING IS LISTED ALPHABETICALLY BY ABBREVIATION.

ABBREVIATION	COMPLETE WORD
A	BEAM AXIAL REACTION OR FORCE
ACI	AMERICAN CONCRETE INSTITUTE
AIA	AMERICAN INSTITUTE OF ARCHITECTS
AISC	AMERICAN INSTITUTE OF STEEL CONSTRUCTION
AISI	AMERICAN IRON AND STEEL INSTITUTE
ALT	ALTERNATE
ANSI	AMERICAN NATIONAL STANDARDS INSTITUTE
APPROX	APPROXIMATE
ARCH	ARCHITECT, ARCHITECTURAL
ASCE	AMERICAN SOCIETY OF CIVIL ENGINEERS
ASD	ALLOWABLE STRESS DESIGN
ASTM	AMERICAN SOCIETY FOR TESTING AND MATERIALS
AWS	AMERICAN WELDING SOCIETY
BLDG	BUILDING
BM	BEAM
BOT	BOTTOM
BRG	BEARING
BS	BOTH SIDES
C	CHANNEL
CANTIL	CANTILEVER
CL	CENTER LINE
CLR	CLEAR, CLEARANCE
CM	CONSTRUCTION MANAGER
CMU	CONCRETE MASONRY UNIT
COL	COLUMN
CONC	CONCRETE
CONN	CONNECT, CONNECTION
CONSTR	CONSTRUCT, CONSTRUCTION
CONT	CONTINUOUS, CONTINUE
CORP	CORPORATION
CTR	CENTER
CU	CUBIC
CU FT, also FT^3	CUBIC FOOT
CU IN, also IN^3	CUBIC INCH
D	DEEP, DEPTH
D, also DL	DEAD LOAD
DEFL	DEFLECT (ION)
DET	DETAIL
DIA	DIAMETER
DIAG	DIAGONAL
DIM	DIMENSION
DWG	DRAWING
E	EAST
EA	EACH
EL	ELEVATION
EQ	EQUAL
EQUIP	EQUIPMENT
EQUIV	EQUIVALENT
EXIST	EXISTING
F, also FIN	FINISH
FL	FLOOR, FLOOR LINE
FLR	FLOOR, FLOORING
FS	FAR SIDE
FT	FOOT
FY	YIELD STRESS (STEEL)
GA	GAGE, GAUGE
GALV	GALVANIZE(D)
GEN	GENERAL
H	HIGH
HOR, also HORIZ	HORIZONTAL
HT	HEIGHT
IN	INCH
INCL	INCLUDE(D), INCLUDING
JT	JOINT
K	KIP
K–FT	KIP–FEET
KLF	KIPS PER LINEAR FOOT
KSF	KIPS PER SQUARE FOOT
KSI	KIPS PER SQUARE INCH
L	LENGTH
L, also LL	LIVE LOAD
LB	POUND
LLBB	LONG LEGS BACK TO BACK (FOR ANGLES)
LLV	LONG LEG VERTICAL
LP	LOW POINT
LSL	LONG–SLOTTED (BOLT HOLE)
M	MOMENT
MATL	MATERIAL
MAX	MAXIMUM
MC	MISCELLANEOUS CHANNEL
MECH	MECHANIC, MECHANICAL
MEMB	MEMBER
MFR	MANUFACTURE, MANUFACTURER
MIN	MINIMUM
MISC	MISCELLANEOUS
N	NORTH
NF	NEAR FACE
NS	NEAR SIDE
NTS	NOT TO SCALE
OPP	OPPOSITE
OVS	OVERSIZE (ROUND BOLT HOLE)
PCF	POUNDS PER CUBIC FOOT
PL	PLATE
PLF	POUNDS PER LINEAL FOOT
PSF	POUNDS PER SQUARE FOOT
PSI	POUNDS PER SQUARE INCH
R	BEAM VERTICAL REACTION OR FORCE
REF	REFERENCE
REINF	REINFORCE(D), REINFORCING, REINFORCEMENT
REQD	REQUIRED
REV	REVISE(D), REVISION
S	SOUTH
SCHEM	SCHEMATIC
SDL	SUPERIMPOSED DEAD LOAD
SECT	SECTION
SIM	SIMILAR
SLOT	SLOT, SLOTTED
SPEC	SPECIFICATION(S)
SQ	SQUARE
SQ FT, also FT^2	SQUARE FOOT
SQ IN, also IN^2	SQUARE INCH
SS	STAINLESS STEEL
SSL	SHORT–SLOTTED (BOLT HOLE)
STAG	STAGGER(ED)
STD	STANDARD
STIFF	STIFFENER
STL	STEEL
STRUCT	STRUCTURAL
SYM	SYMMETRY, SYMMETRICAL
T	TEE SECTION
THK	THICK, THICKNESS
THRU	THROUGH
TEMP	TEMPORARY
TOS	TOP OF STEEL
TYP	TYPICAL
UON	UNLESS OTHERWISE NOTED
VERT	VERTICAL
VIF	VERIFY IN FIELD
W	WEST
W	WIDE
W	WIDE FLANGE
W	WIDTH
W, also WL	WIND LOAD
W/	WITH
W/O	WITHOUT
WASH	WASHER
WP	WORK POINT, WORKING POINT
WT	WEIGHT

SYMBOLS USED AS ABBREVIATIONS

&	AND
@	AT
@''X	AT X (LENGTH UNIT) ON CENTER
[	CHANNEL
][	2 CHANNELS
' '"	FOOT, INCH
ø	ROUND OR DIAMETER
⅂[	2 ANGLES, LONG LEGS BACK TO BACK

© Copyright LERA CONSULTING STRUCTURAL ENGINEERS, R.L.L.P.

WARNING: IT IS A VIOLATION OF LAW FOR ANY PERSON, UNLESS ACTING UNDER THE DIRECTION OF A PROFESSIONAL, LICENSED IN THE STATE OF THIS PROJECT, TO ALTER IN ANY WAY THESE DRAWINGS. WHERE ANY ITEM IS ALTERED, THE SUPERVISING PROFESSIONAL SHALL AFFIX TO THE ITEM HIS SEAL AND THE INSCRIPTION "ALTERED BY" FOLLOWED BY HIS SIGNATURE, THE DATE, AND A SPECIFIC DESCRIPTION OF THE ALTERATION.

DOB APPROVAL STAMP

COOLING TOWER REPLACEMENT

BRONX DISTRICT ATTORNEY'S OFFICE
198 E 161ST STREET
NEW YORK, NEW YORK 10451

SPONSOR AGENCY:
DEPARTMENT OF CITYWIDE ADMINISTRATIVE SERVICES
MANHATTAN MUNICIPAL BUILDING
ONE CENTER STREET, 17 FLOOR SOUTH;
NEW YORK, NEW YORK 10007

MANAGING AGENCY:
DEPARTMENT OF DESIGN AND CONSTRUCTION
30-30 THOMSON AVENUE;
LONG ISLAND CITY, NEW YORK 10007

ARCHITECT:
NANDINEE PHOOKAN ARCHITECT
45 MAIN STREET SUITE #620
BROOKLYN NY 11201
P: 718 643 9500

STRUCTURAL ENGINEER:
LERA CONSULTING STRUCTURAL ENGINEERS
40 WALL STREET, FLOOR 23
NEW YORK, NY 10005
P: 212 750 9000

MEP ENGINEER:
DEWBERRY ENGINEERS
132 WEST 31ST STREET, SUITE 301
NEW YORK, NEW YORK 10001
P: 646 434 2822

PLUMBING ENGINEER:
AXON ENGINEERING SERVICES, LLC
222 OUTWATER LN, SUITE 3A
GARFIELD, NJ 07026
p: 917 677 2484

KEY PLAN:

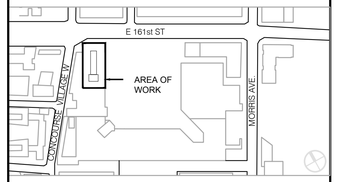

REVISIONS:

NUMBER	DESCRIPTION	DATE
	ISSUE FOR BID	01-27-2026

Department of Design and Construction

DIVISION OF PUBLIC BUILDINGS

CAPITAL PROJECT NUMBER:
PW77198CT

PROJECT
198 E 161ST STREET COOLING TOWER REPLACEMENT
198 E 161ST ST
BRONX, NY 10451

FOR THE:
Department of Citywide Administrative Services (DCAS)

DOB NOW APPLICATION: X01141830-I1

DRAWING TITLE:
STANDARD ABBREVIATIONS

SEAL & SIGNATURE



DATE: 05 DECEMBER 2025
PROJECT NO: P1842
DRAWN BY: LERA
CHECKED BY: LERA
DRAWING NUMBER: S-001.00
CADO FILE No:

GENERAL STRUCTURAL NOTES:

1. ALL WORK SHALL CONFORM TO THE REQUIREMENTS OF THE 2022 BUILDING CODE OF THE CITY OF NEW YORK, WITH ALL APPLICABLE ADDENDA SUPPLEMENTS. HEREINAFTER REFERRED TO AS BUILDING CODE, WITH THE SPECIFICATIONS, AND WITH THE REGULATIONS OF ALL GOVERNMENTAL AUTHORITIES HAVING JURISDICTION, WITH THE EXCEPTION THAT, WHERE PERMITTED UNDER SECTION 28-101.4.3 OF THE 2022 BUILDING CODE, WORK ON PRIOR CODE BUILDINGS MAY BE PERFORMED IN ACCORDANCE WITH THE REQUIREMENTS AND STANDARDS SET FORTH IN THE 1968 BUILDING CODE.

2. CONTRACTOR SHALL KEEP AT LEAST ONE FULL COPY OF THE FOLLOWING DOCUMENTS IN THE FIELD OFFICE AT ALL TIMES:

   A. *BUILDING CODE.*

   B. *FIELD REFERENCE MANUAL: STANDARD SPECIFICATIONS FOR STRUCTURAL CONCRETE, ACI 301-10, WITH SELECTED ACI AND ASTM REFERENCES,* ACI FIELD REFERENCE MANUAL, SP-15 (10).

   C. *AISC MANUAL OF STEEL CONSTRUCTION – LOAD & RESISTANCE FACTOR DESIGN,* AISC 360-05

3. CONTRACT DOCUMENTS

   A. CONTRACT DOCUMENTS ARE INTENDED TO INDICATE INFORMATION SUFFICIENT TO CONVEY THE DESIGN INTENT. THESE DOCUMENTS REPRESENT THE STRUCTURE IN ITS COMPLETED STATE, AND DO NOT INDICATE THE MEANS-AND-METHODS OF CONSTRUCTION, WHICH IS THE RESPONSIBILITY OF THE CONTRACTOR. THE CONTRACTOR IS RESPONSIBLE TO COORDINATE AND NOTIFY THE ENGINEER OF INCONSISTENCIES IN THESE DOCUMENTS PRIOR TO COMMENCEMENT OF THE WORK.

   B. THE SPECIFICATION SECTIONS 033000, 051000, 053000 AND ALL OTHER SECTIONS OF THE SPECIFICATIONS ARE BINDING ON CONTRACTOR AS THOUGH COPIED, WORD-FOR-WORD, DIRECTLY INTO THE DRAWINGS.

   C. "TYPICAL DETAILS" ARE APPLICABLE THROUGHT THE ENTIRE SCOPE OF WORK, ALTHOUGH THEY ARE NOT SPECIFICALLY REFERENCED. CONTRACTOR IS RESPONSIBLE TO REVIEW THESE DETAILS TO UNDERSTAND THE INTENT AND EXTENT OF THEIR APPLICATION. CONTRACTOR SHALL NOTIFY THE ENGINEER IF CONDITIONS EXIST THAT ARE NOT SPECIFICALLY DETAILED, SCHEDULED OR COVERED BY TYPICAL DETAILS.

4. STRUCTURAL DESIGN CRITERIA IS FOR GENERAL INFORMATION ONLY AND IS PROVIDED FOR OWNER'S USE.

5. REFERENCE DOCUMENTS

   A. ORIGINAL STRUCTURAL DRAWINGS – PARTIAL SET, RIPPED/DAMAGED, ENGINEER AND DATE UNKNOWN.

   B. STRUCTURAL DRAWINGS, BY TRINITY INDUSTRIES, INC. PARTIAL SET, VARIOUS DATES IN 1990.

   C. ROOFTOP MECHANICAL RENOVATION DRAWINGS, BY KS MECHANICAL SERVICES, INC. DATED MARCH 28, 1995.

6. GENERAL REQUIREMENTS

   A. IT IS INTENDED THAT ALL MEMBERS BE FABRICATED AND ERECTED FREE OF SHOP AND FIELD SPLICES WHICH ARE NOT SPECIFICALLY SHOWN IN THE CONTRACT DRAWINGS. IF FIELD CONDITIONS NECESSITATE FIELD SPLICING OF MEMBERS, SUBMIT SPLICE LOCATIONS FOR STRUCTURAL ENGINEER'S ACCEPTANCE. WHERE FIELD SPLICING IS ACCEPTED, SPLICES SHALL BE SHOWN IN THE SHOP DRAWINGS OR IN FIELD WORK DRAWINGS.

   B. CONTRACTOR SHALL BE SOLELY RESPONSIBLE FOR THE CORRECTNESS OF DIMENSIONS AND QUANTITIES AND FOR THE FITTING TO OTHER WORK; FOR WORK TO BE CONFIRMED AND CORRELATED AT THE SITE; FOR INFORMATION PERTAINING TO THE FABRICATION PROCEDURE OR TO THE MEANS, METHODS, TECHNIQUES, SEQUENCES AND PROCEDURES OF CONSTRUCTION; AND FOR THE COORDINATION OF THE WORK OF THIS SECTION WITH THE WORK OF ALL OTHER TRADES. THE ARCHITECT'S AND STRUCTURAL ENGINEER'S REVIEW OF CONTRACTOR'S SUBMISSIONS DOES NOT RELIEVE CONTRACTOR FROM THESE RESPONSIBILITIES.

   C. FIELD MEASUREMENTS: OBTAIN ALL FIELD MEASUREMENTS REQUIRED FOR PROPER FABRICATION AND INSTALLATION OF WORK. SUBMIT, PRIOR TO INSTALLATION, ALL MEASUREMENTS INDICATING DISCREPANCIES FROM THE DRAWINGS. DESCRIBE IN WRITING AND, WHERE APPLICABLE, BY SKETCHES THE PROPOSED METHODS FOR CORRECTING DISCREPANCIES.

   D. LAY OUT EACH PART OF THE WORK IN STRICT ACCORDANCE WITH THE ARCHITECTURAL, STRUCTURAL, MECHANICAL, ELECTRICAL, PLUMBING AND ALL OTHER DRAWINGS AND BE RESPONSIBLE FOR CORRECT LOCATION OF SAME.

   E. HOLES SHALL NOT BE CUT OR DRILLED INTO EXISTING OR NEW STRUCTURAL MEMBERS WITHOUT THE APPROVAL OF THE STRUCTURAL ENGINEER.

7. CONSTRUCTION SEQUENCE: DESCRIPTIONS OF LIMITATIONS ON CONSTRUCTION SEQUENCE ARE INTENDED TO ASSIST CONTRACTOR IN COORDINATING THE WORK OF THE PROJECT. DESCRIPTIONS DO NOT DESCRIBE FULLY THE LIMITATIONS GIVEN, DO NOT DESCRIBE ALL LIMITATIONS, NOR DO THEY PRECLUDE CONSTRUCTION SEQUENCES NOT CONTEMPLATED HEREIN. WHETHER OR NOT CONTRACTOR FOLLOWS THE LIMITATIONS ON CONSTRUCTION SEQUENCE DESCRIBED HEREIN AND UNTIL SUCH TIME AS THE STRUCTURAL WORK IS COMPLETED, CONTRACTOR REMAINS FULLY RESPONSIBLE FOR BOTH THE STABILITY AND THE SAFETY OF THE WORK; ADHERENCE TO THE LIMITATIONS DESCRIBED HEREIN DOES NOT RELIEVE CONTRACTOR FROM THAT RESPONSIBILITY.

8. EXISTING STRUCTURES

   A. DIMENSIONS AND DETAILS SHOWN IN STRUCTURAL DRAWINGS ARE TAKEN FROM THE ORIGINAL DESIGN DOCUMENTS AND MAY NOT ACCURATELY REPRESENT CURRENT EXISTING CONDITIONS. THE CONTRACTOR SHALL VERIFY ALL INFORMATION PERTAINING TO EXISTING CONDITIONS BY INSPECTION AND MEASUREMENT AT THE SITE PRIOR TO THE COMMENCEMENT OF ANY WORK.

   B. FIREPROOFING: SEE ARCHITECTURAL DRAWINGS AND SPECIFICATIONS. UNLESS OTHERWISE SHOWN OR NOTED IN THE DRAWINGS, APPLY SPRAYED FIREPROOFING, TO ALL EXISTING STEEL WHERE EXISTING FIREPROOFING IS DAMAGED OR REMOVED IN THE EXECUTION OF THIS WORK, AND AS DIRECTED BY THE ARCHITECT. SPRAYED FIREPROOFING SHALL BE APPLIED TO ACHIEVE A MINIMUM 2-HOUR FIRE-RATING, UNLESS OTHERWISE NOTED. FIREPROOFING IS NOT REQUIRED FOR NEW DUNNAGE STEEL ABOVE THE ROOF.

9. SHORING AND DEMOLITION

   A. PROVIDE AND PLACE BRACING AND SHORING AS NEEDED. SUPPORT STRUCTURE TO REMAIN AS NECESSARY TO PREVENT DAMAGE OR UNACCEPTABLE DEFLECTION. KEEP ALL BRACING AND SHORING IN PLACE DURING NEW STRUCTURAL STEEL CONSTRUCTION.

   WHERE EXISTING STRUCTURE NEED BE WELDED TO, SHORE STRUCTURE PRIOR TO WELDING FOR THE FULL LOAD PRESENT AT THE TIME OF WELDING.

   BRACING AND SHORING, INCLUDING CONNECTIONS TO EXISTING STRUCTURE WITH STIFFENER PLATES AS MAY BE REQUIRED, SHALL BE DESIGNED BY CONTRACTOR'S PROFESSIONAL ENGINEER LICENSED IN NEW YORK STATE. PROCEDURES, DRAWINGS AND CALCULATIONS SHALL BE SIGNED AND SEALED BY CONTRACTOR'S ENGINEER AND SUBMITTED FOR REVIEW AND APPROVAL.

   B. REMOVE ALL DEMOLISHED MATERIAL PROMPTLY FROM THE SITE.

   C. ERECT AND MAINTAIN DUSTPROOF BARRIERS TO PREVENT SPREAD OF DUST OR FUMES. PROVIDE MEANS FOR EFFECTIVE DUST CONTROL. REMOVE BARRIERS UPON COMPLETION.

   D. SAWCUT AND REMOVE CONCRETE TO TRUE SMOOTH LINES TO THE EXTENT SHOWN IN THE DRAWINGS AFTER INSTALLATION OF ALL ADDED BEAMS AND REINFORCEMENTS, WITHOUT DAMAGE TO EXISTING REINFORCING STEEL DESIGNATED TO REMAIN. JOINTS BETWEEN EXISTING CONCRETE AND NEW CONCRETE SLAB CONSTRUCTION SHALL BE LEFT CLEAN, ROUGH, AND ESSENTIALLY VERTICAL.

   E. CAST NEW CONCRETE AS REQUIRED TO REPAIR CONCRETE SLABS AND THE LIKE THAT WERE DAMAGED OR REMOVED IN THE EXECUTION OF THIS CONTRACT TO THE SATISFACTION OF THE ARCHITECT AND STRUCTURAL ENGINEER.

   F. ALL STEEL BEAM CUTS SHALL BE NEAT, SMOOTH, AND TRUE TO LINE. REPAIR EXCESS GAS BURNING SERRATIONS AND GOUGES BY NECESSARY WELDING AND GRINDING.

   G. EXISTING MECHANICAL/ELECTRICAL WORK MAY NEED TO BE TEMPORARILY REMOVED TO ACCOMMODATE THE REINFORCEMENT OF THE EXISTING STRUCTURE. SEE MECHANICAL/ELECTRICAL DRAWINGS FOR REQUIREMENTS RELATED TO DOCUMENTING, REMOVING, STORING, REINSTALLING AND TESTING SUCH WORK.

   CONTRACTOR'S ENGINEER

10. A. CONTRACTOR SHALL RETAIN A PROFESSIONAL ENGINEER LICENSED IN NEW YORK TO OVERSEE CONTRACTOR'S DEMOLITION AND CONSTRUCTION SEQUENCE.

    B. CONTRACTOR'S PROFESSIONAL ENGINEER SHALL DESIGN ALL TEMPORARY BRACING, SHORING AND THE LIKE. CONTRACTOR SHALL SUBMIT SHOP DRAWINGS AND CALCULATIONS SIGNED AND SEALED BY CONTRACTOR'S PROFESSIONAL ENGINEER FOR TEMPORARY WORK.

    C. CONTRACTOR'S PROFESSIONAL ENGINEER SHALL PROVIDE CONSTRUCTION PHASE OVERSIGHT OF THEIR WORK INCLUDING CONTROLLED INSPECTIONS THAT MAY BE REQUIRED.

STRUCTURAL STEEL

1. UNLESS OTHERWISE NOTED, USE THE FOLLOWING:

SHAPE	ASTM STANDARD	MINIMUM FY (KSI)
WIDE-FLANGES, TEES	A572, GRADE 50 A992, GRADE 50	50
CHANNELS, BUILT-UP SECTIONS	A572, GRADE 50	50
ROUND HSS	A500, GRADE C	46
RECTANGULAR AND SQUARE HSS	A500, GRADE C	50
ANGLES	A572	50
CONNECTION PLATE	A572	50

   WHERE NOTED OTHERWISE, PROVIDE THE INDICATED MINIMUM YIELD STRESS (FOR EXAMPLE, "FY 50" MEANS A MINIMUM YIELD STRESS OF 50 KSI).

2. ALL FORCES GIVEN IN THE STRUCTURAL DRAWINGS FOR STEEL MEMBERS ARE SERVICE-LEVEL (UNFACTORED) FORCES, UNLESS OTHERWISE NOTED.

3. UNLESS SPECIFICALLY NOTED TO THE CONTRARY, ALL BOLTED CONNECTIONS SHALL BE MADE WITH SLIP-CRITICAL, A325 OR A490 BOLTS. THE MINIMUM NUMBER OF ROWS OF BOLTS FOR FRAMED CONNECTIONS SHALL BE BASED ON BEAM DEPTH AS TABULATED BELOW. WHERE NO REACTION IS PROVIDED IN THE DRAWINGS, THE CONNECTION SHALL BE PROPORTIONED TO CARRY THE FORCES TABULATED BELOW:

MINIMUM CONNECTION REQUIREMENTS

NOMINAL DEPTH OF BEAM OR GIRDER	MINIMUM NUMBER OF ROWS OF BOLTS	MINIMUM VERTICAL REACTION, KIPS (SERVICE LOADS)		MINIMUM AXIAL REACTION, KIPS (FACTORED)*
		CONNECTED TO BEAM, GIRDER OR WALL	CONNECTED TO COLUMN OR BRACING	ALL BEAM END CONNECTIONS
8	2	10	17	A = R
10	2	12	17	A = R
12	2	14	26	A = R
14, 16	3	26	35	A = R
18	3	35	54	A = R
30	5	53	72	A = R

   * NOTE: WHERE MINIMUM TABULATED AXIAL FORCE IS USED, IT NEED NOT BE CONSIDERED TO ACT SIMULTANEOUSLY WITH THE VERTICAL REACTION. WHERE AXIAL FORCES ARE TAKEN FROM THE DRAWINGS THESE SHALL BE CONSIDERED TO ACT SIMULTANEOUSLY WITH VERTICAL REACTIONS (EITHER MINIMUM TABULTATED OR THOSE SPECIFICALLY SHOWN IN THE DRAWINGS).

4. ALL BEAM VERTICAL, AXIAL, TORSION AND MOMENT REACTIONS ACT SIMULTANEOUSLY, UON. END REACTIONS AND/OR DETAILS ARE SHOWN THUS:

   INDICATES CONNECTION TO BE DESIGNED FOR THE GIVEN REACTIONS. R = VERTICAL REACTION AND A = BEAM AXIAL REACTION IN KIPS. WHERE ONLY ONE VALUE IS GIVEN, A = 0. THE CONNECTION SHALL BE DESIGNED FOR THE MORE SEVERE OF THE FOLLOWING:

   R ALONE (OR REACTION FROM THE MINIMUM CONNECTION REQUIREMENTS TABLE, WHICHEVER IS GREATER) AT ALLOWABLE STRESSES.

   R AND A, VECTORIALLY COMBINED AT ALLOWABLE STRESSES INCREASED BY ONE-THIRD UNLESS OTHERWISE NOTED.

   INDICATES A MOMENT AND/OR TORSION CONNECTION. M = MOMENT IN FOOT-KIPS, T = TORSION IN FOOT-KIPS. THE FULL MOMENT CAPACITY OF THE BEAM SHALL BE DEVELOPED UNLESS OTHERWISE NOTED.

   VERTICAL AND BEAM AXIAL REACTIONS SHALL BE DESIGNED AS DESCRIBED ABOVE (i.e. R + M AT ALLOWABLE STRESSES AND R+ A + M AT ALLOWABLE STRESSES INCREASED BY ONE-THIRD).

5. REINFORCING SHALL BE PROVIDED TO BEAMS AT CONNECTIONS WHERE CUTS HAVE REDUCED THE SHEAR OR MOMENT CAPACITY BELOW THAT REQUIRED TO SUSTAIN THE REACTIONS. FLANGES AND WEBS SHALL BE REINFORCED WHERE THE LOCAL CAPACITY TO SUSTAIN CONNECTION LOADS IS INADEQUATE.

6. ELECTRODES, FLUX AND SHIELDING GAS SHALL PROVIDE PHYSICAL PROPERTIES AFTER WELDING EQUIVALENT TO OR BETTER THAN E7018 LOW HYDROGEN ELECTRODES.

7. CAMBER WHERE REQUIRED IS INDICATED BY "C" IN PLANS, FOLLOWED BY THE ORDINATE, IN INCHES. WHERE NO CAMBER IS INDICATED, MEMBERS SHALL BE FABRICATED AND PLACED WITH NATURAL CAMBER UP.

8. PROVIDE 5/16" THICK OR THICKER SHELF ANGLES AT COLUMNS, WALLS AND BEAMS AS REQUIRED TO PROVIDE END AND SIDE GRATING SUPPORTS.

9. DOUBLE ANGLE MEMBERS SHALL HAVE LONG LEGS BACK-TO-BACK UNLESS OTHERWISE NOTED.

10. DOUBLE ANGLE MEMBERS IN CONTACT WITH EACH OTHER SHALL BE CONNECTED BY SLIP-CRITICAL BOLTS OR INTERMITTENT WELDS AT A SPACING NOT TO EXCEED 24".

    DOUBLE ANGLE MEMBERS SEPARATED FROM ONE ANOTHER BY INTERMITTENT FILLERS SHALL BE CONNECTED TO ONE ANOTHER BY SLIP-CRITICAL BOLTS OR WELDS AT THESE FILLERS SUCH THAT THE SLENDERNESS RATIO, L / R, OF EITHER SHAPE, BETWEEN THE FASTENERS, DOES NOT EXCEED 0.75 TIMES THE GOVERNING SLENDERNESS RATIO, L / R, OF THE BUILT-UP MEMBER. THE LEAST RADIUS OF GYRATION, R, SHALL BE USED IN COMPUTING THE SLENDERNESS RATIO OF EACH COMPONENT PART.

    AT LEAST TWO INTERMEDIATE CONNECTORS SHALL BE USED ALONG THE LENGTH OF THE DOUBLE-ANGLE MEMBER.

11. FILLET WELDS ON GUSSET PLATES, SEATED CONNECTIONS AND OTHER PLATE EXTENSIONS SHALL BE RETURNED AROUND THE ENDS OF THE PLATE FOR PLATES EXPOSED TO WEATHER.

12. ERECTION AIDS AND DEVICES ARE NOT SHOWN HEREIN. THE DETAILING OF THESE DEVICES IS THE RESPONSIBILITY OF CONTRACTOR.

STEEL GRATING

1. GRATING SHALL BE STANDARD-DUTY WELDED, RECTANGULAR BAR, GW-150, 19-W-4 SPACING, HOT DIPPED, GALVANIZED STEEL, 1-1/2" x 3/16" RECTANGULAR BAR, BY MCNICHOLS, OR APPROVED EQUIVALENT. BAR GRATING SHALL BE CAPABLE OF SUPPORTING A MINIMUM OF 60 POUNDS PER SQUARE FOOT FOR THE SPANS SHOWN IN THE PLANS.

2. BEARING BARS MUST BE INSTALLED PARALLEL TO THE SPAN DIRECTIONS NOTED IN THE PLANS.

3. GRATING PANELS MUST BE INSTALLED WITH CROSS BARS ON TOP SIDE.

4. DO NOT NOTCH BEARING BARS OR CREATE CUT OUTS WITHOUT APPROVAL. WHERE NOTCHING OR CUT-OUTS ARE REQUIRED, GRATING SHALL BE DESIGNED TO HAVE ADDITIONAL STRUCTURAL SUPPORT UNDER EACH BEARING BAR. SUBMIT ALL NOTCHING AND CUT-OUTS FOR REVIEW.

5. A MINIMUM OF 1" BEARING SHALL BE PROVIDED ON SUPPORTING STEEL FRAMING.

6. PROVIDE 3/8" CLEARANCE BETWEEN ENDS OF BEARING BARS AND CROSS BARS AT JOINTS OF ADJACENT GRATING PANELS.

7. GRATING TO BE ATTACHED TO SUPPORTING STEEL FRAMING WITH MCNICHOLS GALVANIZED GC1C SADDLE CLIPS, OR APPROVED EQUIVALENT. INSTALL CLIPS PER MANUFACTURER'S WRITTEN INSTRUCTIONS.

DOB APPROVAL STAMP

© Copyright LERA CONSULTING STRUCTURAL ENGINEERS, R.L.L.P.

WARNING: IT IS A VIOLATION OF LAW FOR ANY PERSON, UNLESS ACTING UNDER THE DIRECTION OF A PROFESSIONAL, LICENSED IN THE STATE OF THIS PROJECT, TO ALTER IN ANY WAY THESE DRAWINGS. WHERE ANY ITEM IS ALTERED, THE SUPERVISING PROFESSIONAL SHALL AFFIX TO THE ITEM HIS SEAL AND THE INSCRIPTION "ALTERED BY" FOLLOWED BY HIS SIGNATURE, THE DATE, AND A SPECIFIC DESCRIPTION OF THE ALTERATION.

COOLING TOWER REPLACEMENT

BRONX DISTRICT ATTORNEY'S OFFICE
198 E 161ST STREET
NEW YORK, NEW YORK 10451

SPONSOR AGENCY:
DEPARTMENT OF CITYWIDE ADMINISTRATIVE SERVICES
MANHATTAN MUNICIPAL BUILDING
ONE CENTER STREET, 17 FLOOR SOUTH;
NEW YORK, NEW YORK 10007

MANAGING AGENCY:
DEPARTMENT OF DESIGN AND CONSTRUCTION
30-30 THOMSON AVENUE;
LONG ISLAND CITY, NEW YORK 10007

ARCHITECT:
NANDINEE PHOOKAN ARCHITECT
45 MAIN STREET SUITE #620
BROOKLYN NY 11201
P: 718 643 9500

STRUCTURAL ENGINEER:
LERA CONSULTING STRUCTURAL ENGINEERS
40 WALL STREET, FLOOR 23
NEW YORK, NY 10005
P: 212 750 9000

MEP ENGINEER:
DEWBERRY ENGINEERS
132 WEST 31ST STREET, SUITE 301
NEW YORK, NEW YORK 10001
P: 646 434 2822

PLUMBING ENGINEER:
AXON ENGINEERING SERVICES, LLC
222 OUTWATER LN, SUITE 3A
GARFIELD, NJ 07026
p: 917 677 2484

KEY PLAN:

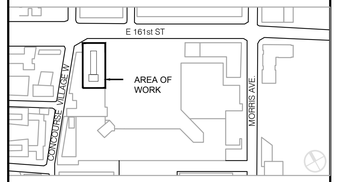

REVISIONS:

NUMBER	DESCRIPTION	DATE
	ISSUE FOR BID	01-27-2026

Department of Design and Construction

DIVISION OF PUBLIC BUILDINGS

CAPITAL PROJECT NUMBER:
PW77198CT

PROJECT
198 E 161ST STREET COOLING TOWER REPLACEMENT
198 E 161ST ST
BRONX, NY 10451

FOR THE:
Department of Citywide Administrative Services (DCAS)

DOB NOW APPLICATION: X01141830-I1

DRAWING TITLE:
GENERAL STRUCTURAL NOTES

SEAL & SIGNATURE



DATE:	05 DECEMBER 2025
PROJECT NO:	P1842
DRAWN BY:	LERA
CHECKED BY:	LERA
DRAWING NUMBER:	S-002.00
CADO FILE No:	

STRUCTURAL DESIGN CRITERIA

THIS STRUCTURAL DESIGN CRITERIA OF THE PROJECT IS FOR GENERAL INFORMATION ONLY AND DOES NOT MODIFY, ALTER OR OVERRULE THE SPECIFICATIONS OR THE DRAWINGS.

A. LOCATION

THIS PROJECT IS LOCATED IN BRONX, NEW YORK, U.S.A.

B. CODES

THE STRUCTURAL DESIGN, REPRESENTED BY THE CONTENTS OF THE CONTRACT DOCUMENTS, IS IN GENERAL ACCORD WITH THE MINIMUM REQUIREMENTS OF THE FOLLOWING CODES AND STANDARDS. IN SOME INSTANCES, LERA HAS CONCLUDED THAT MORE STRINGENT REQUIREMENTS ARE APPROPRIATE FOR THE STRUCTURAL DESIGN OF THE PROJECT; IN THOSE INSTANCES, THE MORE STRINGENT STRUCTURAL REQUIREMENTS HAVE BEEN APPLIED.

1. 1968 BUILDING CODE OF THE CITY OF NEW YORK, HEREINAFTER REFERED TO AS BUILDING CODE. (EXCEPTION UNDER SECTION 28-101.4.3 OF THE 2022 BUILDING CODE FOR WORK ON PRIOR CODE BUILDINGS)

2. ASCE 7-05, MINIMUM DESIGN LOADS FOR BUILDINGS AND OTHER STRUCTURES, BY AMERICAN SOCIETY OF CIVIL ENGINEERS

3. AISC 360-05, SPECIFICATION FOR STRUCTURAL STEEL BUILDINGS, 7 JULY 2016, BY AMERICAN INSTITUTE OF STEEL CONSTRUCTION.

C. GRAVITY LOADS

THE LOADS THAT FOLLOW DO NOT INCLUDE THE WEIGHT OF STRUCTURAL STEEL MEMBERS.

GALVANIZED STEEL GRATING :	11 PSF (ON FULL AREA OF UNIT ACCESS PLATFORM)
ALUMINUM CLADDING	20 PSF (ASSUMED; ON ALL FACES OF SCREENWALL)
COOLING TOWER	52,450 LBS (TOTAL OPERATING WEIGHT PER UNIT – 2 UNITS)

D. LIVE AND SNOW LOADS (PER 2022 BUILDING CODE TABLE 1607.1 AND BUILDING CODE ARTICLE 3 SUBCHAPTER 27-561)

LIVE LOAD	60 PSF (ON FULL AREA OF UNIT ACCESS PLATFORM)
ROOF LIVE & SNOW LOAD:	30 PSF (ON GRATED PLATFORM & ATOP UNITS)
SNOW ACCUMULATIONS:	45 PSF (ON GRATED PLATFORM)

E. SEISMIC LOADS (PER BUILDING CODE RS 9-6)

PER RS 9-6, THE EARTHQUAKE CODE DOES NOT AFFECT AN ALTERATION WHERE THERE IS NO ENLARGEMENT OF THE EXISTING STRUCTURE. THEREFORE, THE STRUCTURAL WORK DESCRIBED IN THESE DRAWINGS, FOR THE FACADE REPLACEMENT, IS NOT REQUIRED TO COMPLY WITH THE EARTHQUAKE CODE.

F. WIND LOADS (PER BUILDING CODE RS 9-5)

SCREEN WALL ELEMENTS:	37.5 PSF (25 PSF WITH 1.5 SHAPE FACTOR)
COOLING TOWER:	37.5 PSF (25 PSF WITH 1.5 SHAPE FACTOR)

G. LOAD COMBINATIONS

1. DEFINITIONS:

D = DEAD LOAD
E = EARTHQUAKE LOAD
H = LOAD DUE TO LATERAL EARTH PRESSURE, GROUND WATER PRESSURE, OR PRESSURE OF BULK MATERIAL
L = LIVE LOAD
L_r = ROOF LIVE LOAD
R = RAIN LOAD
S = SNOW LOAD
W = WIND LOAD

3. STRUCTURAL STEEL ELEMENTS: SERVICE LOADS AND FORCES

1. D
2. D + L
3. D + (L_r OR S)
4. D + 0.75L + 0.7(L_r OR S)
5. D + W
6. D + 0.75 W + 0.75L + 0.75(L_rOR S)
7. 0.6D + W

H. STEEL BEAM AND GIRDER CONNECTIONS

REACTIONS PROVIDED FOR THE DESIGN BY CONTRACTOR OF END CONNECTIONS OF BEAMS AND GIRDERS ARE EQUAL TO 1.2 TIMES THE CALCULATED VERTICAL REACTION TO PROVIDE FOR FUTURE FLEXIBILITY IN THE PLACEMENT OF SUPERIMPOSED LIVE LOADS.

J. DEFLECTIONS

1. UNLESS OTHERWISE NOTED, LIVE LOAD DEFLECTIONS OF BEAMS ARE LIMITED TO SPAN/500 OR 3/4 INCH, WHICHEVER IS SMALLER.

© Copyright LERA CONSULTING STRUCTURAL ENGINEERS, R.L.L.P.

WARNING: IT IS A VIOLATION OF LAW FOR ANY PERSON, UNLESS ACTING UNDER THE DIRECTION OF A PROFESSIONAL, LICENSED IN THE STATE OF THIS PROJECT, TO ALTER IN ANY WAY THESE DRAWINGS. WHERE ANY ITEM IS ALTERED, THE SUPERVISING PROFESSIONAL SHALL AFFIX TO THE ITEM HIS SEAL AND THE INSCRIPTION "ALTERED BY" FOLLOWED BY HIS SIGNATURE, THE DATE, AND A SPECIFIC DESCRIPTION OF THE ALTERATION.

DOB APPROVAL STAMP

COOLING TOWER REPLACEMENT

BRONX DISTRICT ATTORNEY'S OFFICE
198 E 161ST STREET
NEW YORK, NEW YORK 10451

SPONSOR AGENCY:
DEPARTMENT OF CITYWIDE ADMINISTRATIVE SERVICES
MANHATTAN MUNICIPAL BUILDING
ONE CENTER STREET, 17 FLOOR SOUTH;
NEW YORK, NEW YORK 10007

MANAGING AGENCY:
DEPARTMENT OF DESIGN AND CONSTRUCTION
30-30 THOMSON AVENUE;
LONG ISLAND CITY, NEW YORK 10007

ARCHITECT:
NANDINEE PHOOKAN ARCHITECT
45 MAIN STREET SUITE #620
BROOKLYN NY 11201
P: 718.643.9500

STRUCTURAL ENGINEER:
LERA CONSULTING STRUCTURAL ENGINEERS
40 WALL STREET, FLOOR 23
NEW YORK, NY 10005
P: 212 750 9000

MEP ENGINEER:
DEWBERRY ENGINEERS
132 WEST 31ST STREET, SUITE 301
NEW YORK, NEW YORK 10001
P: 646 434 2822

PLUMBING ENGINEER:
AXON ENGINEERING SERVICES, LLC
222 OUTWATER LN, SUITE 3A
GARFIELD, NJ 07026
p: 917 677 2484

KEY PLAN:

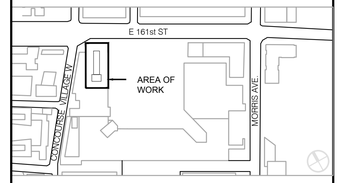

REVISIONS:

NUMBER	DESCRIPTION	DATE
	ISSUE FOR BID	01-27-2026

Department of Design and Construction

DIVISION OF PUBLIC BUILDINGS

CAPITAL PROJECT NUMBER:
PW77198CT

PROJECT
198 E 161ST STREET COOLING TOWER REPLACEMENT
198 E 161ST ST
BRONX, NY 10451

FOR THE:
Department of Citywide Administrative Services (DCAS)

DOB NOW APPLICATION: X01141830-I1

DRAWING TITLE:
STRUCTURAL DESIGN CRITERIA

SEAL & SIGNATURE



DATE:	05 DECEMBER 2025
PROJECT NO:	P1842
DRAWN BY:	LERA
CHECKED BY:	LERA
DRAWING NUMBER:	S-003.00
CADO FILE No:	

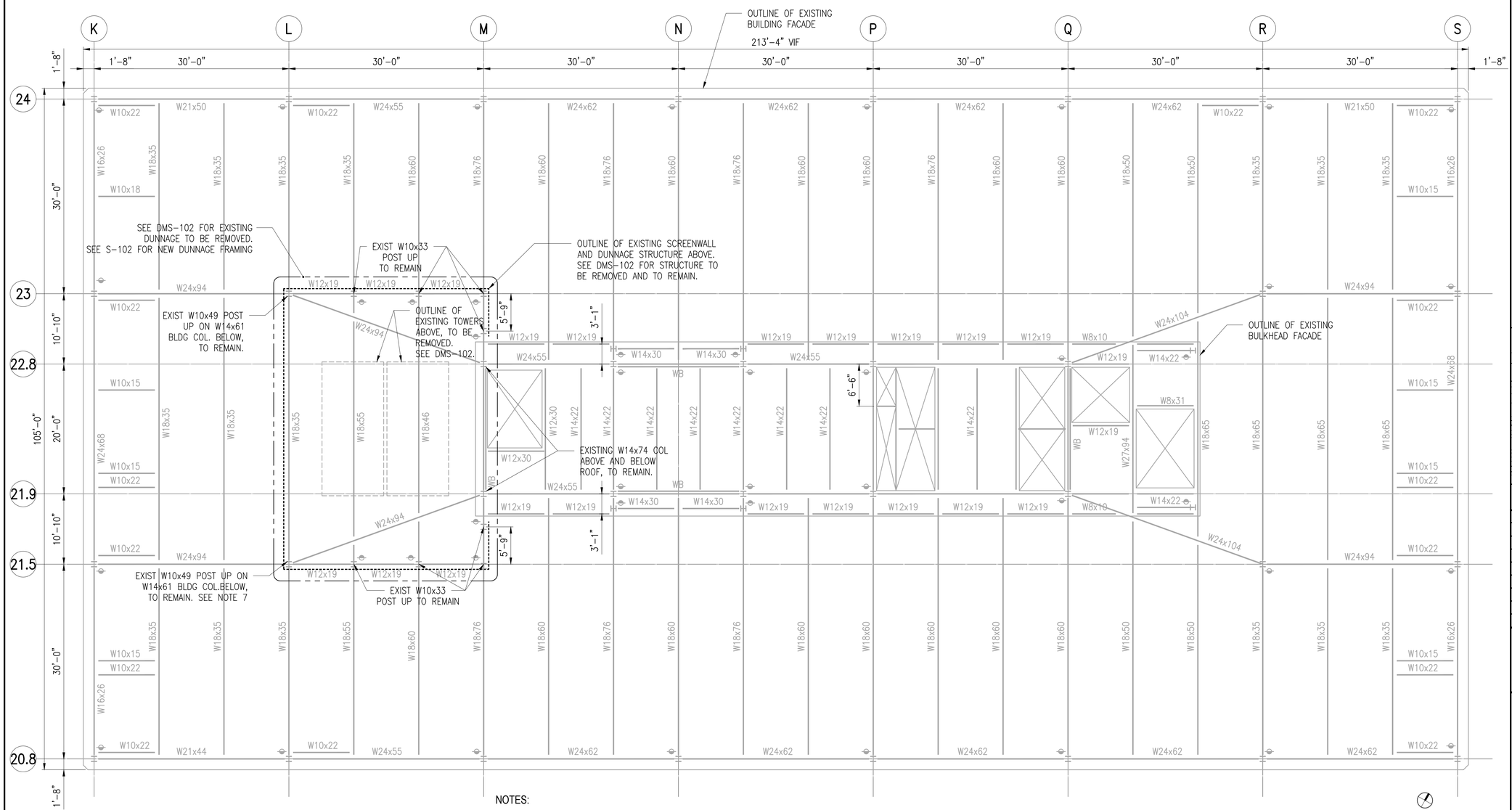

1 EXISTING ROOF FRAMING PLAN

SCALE: 1/8"=1'-0"

NOTES:

1. REFER TO:
   S00X–SERIES DRAWINGS FOR GENERAL NOTES, DESIGN CRITERIA AND ABBREVIATIONS
   DMS–10X SERIES DRAWINGS FOR DEMOLITION PART PLANS
   DMS–30X SERIES DRAWINGS FOR DEMOLITION ELEVATIONS AND SECTIONS
   S1XX–SERIES DRAWINGS FOR PART PLANS
   S30X–SERIES DRAWINGS FOR ELEVATIONS AND SECTIONS
   S40X–SERIES DRAWINGS FOR TYPICAL DETAILS
   S50X SERIES DRAWINGS FOR SECTIONS AND DETAILS
2. TOP OF MAIN ROOF CONCRETE SLAB IS AT REFERENCE ELEVATION [+137'-11"] UNLESS OTHERWISE NOTED [XXX,] WHERE XXX IS MEASURED RELATIVE TO REFERENCE ELEVATION.
3. TOP OF ROOF STRUCTURAL STEEL IS (–5-1/2") BELOW REFERENCE ELEVATION UNLESS OTHERWISE NOTED.
4. EXISTING CONSTRUCTION IS SHOWN FADED AND IS PROVIDED FOR REFERENCE ONLY. SEE ORIGINAL BUILDING DRAWINGS FOR EXISTING CONSTRUCTION INFORMATION AND VERIFY ALL PERTINENT CONDITIONS IN THE FIELD. SEE ARCHITECTURAL DRAWINGS FOR INFORMATION NOT SHOWN. CONFIRMING ALL CONDITIONS IN THE FIELD DURING CONSTRUCTION, WHERE FIELD CONDITIONS VARY SIGNIFICANTLY FROM THAT SHOWN IN THE DESIGN DRAWINGS. SUBMIT THESE CONDITIONS THROUGH THE ARCHITECT, FOR REVIEW.
5. SIZE LOCATION EXTENT AND CONDITION OF EXISTING WALLS, SLABS AND STRUCTURAL FRAMING INCLUDING COLUMNS AND BEAMS, HAVE BEEN ASSUMED AND ARE BASED ON LIMITED INFORMATION FROM EXISTING BUILDING DRAWINGS AND SITE OBSERVATIONS.
6. SEE CONSTRUCTION SEQUENCE NOTES IN S–102.
7. W10 POST IS SPLICED TO TOP OF W14 COLUMN WITH BOLTED FLANGE PLATE AT ROOF LEVEL, ABOVE THE METAL DECK AND PARTIALLY EMBEDDED INTO THE CONCRETE ROOF SLAB.
8. LINETYPE LEGEND
   ——— EXIST FRAMING
   — — — EXIST BRACING

© Copyright LERA CONSULTING STRUCTURAL ENGINEERS, R.L.L.P.

WARNING: IT IS A VIOLATION OF LAW FOR ANY PERSON, UNLESS ACTING UNDER THE DIRECTION OF A PROFESSIONAL, LICENSED IN THE STATE OF THIS PROJECT, TO ALTER IN ANY WAY THESE DRAWINGS. WHERE ANY ITEM IS ALTERED, THE SUPERVISING PROFESSIONAL SHALL AFFIX TO THE ITEM HIS SEAL AND THE INSCRIPTION "ALTERED BY" FOLLOWED BY HIS SIGNATURE, THE DATE, AND A SPECIFIC DESCRIPTION OF THE ALTERATION.

DOB APPROVAL STAMP

COOLING TOWER REPLACEMENT

BRONX DISTRICT ATTORNEY'S OFFICE
198 E 161ST STREET
NEW YORK, NEW YORK 10451

SPONSOR AGENCY:
DEPARTMENT OF CITYWIDE ADMINISTRATIVE SERVICES
MANHATTAN MUNICIPAL BUILDING
ONE CENTER STREET, 17 FLOOR SOUTH;
NEW YORK, NEW YORK 10007

MANAGING AGENCY:
DEPARTMENT OF DESIGN AND CONSTRUCTION
30-30 THOMSON AVENUE;
LONG ISLAND CITY, NEW YORK 10007

ARCHITECT:
NANDINEE PHOOKAN ARCHITECT
45 MAIN STREET SUITE #620
BROOKLYN NY 11201
P: 718.643.9500

STRUCTURAL ENGINEER:
LERA CONSULTING STRUCTURAL ENGINEERS
40 WALL STREET, FLOOR 23
NEW YORK, NY 10005
P: 212 750 9000

MEP ENGINEER:
DEWBERRY ENGINEERS
132 WEST 31ST STREET, SUITE 301
NEW YORK, NEW YORK 10001
P: 646 434 2822

PLUMBING ENGINEER:
AXON ENGINEERING SERVICES, LLC
222 OUTWATER LN, SUITE 3A
GARFIELD, NJ 07026
p: 917 677 2484

KEY PLAN:

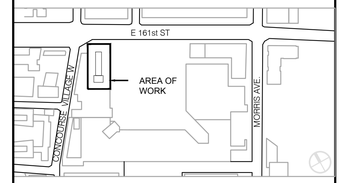

REVISIONS:

NUMBER	DESCRIPTION	DATE
	ISSUE FOR BID	01-27-2026

Department of Design and Construction

DIVISION OF PUBLIC BUILDINGS

CAPITAL PROJECT NUMBER:
PW77198CT

PROJECT
198 E 161ST STREET COOLING TOWER REPLACEMENT
198 E 161ST ST
BRONX, NY 10451

FOR THE:
Department of Citywide Administrative Services (DCAS)

DOB NOW APPLICATION: X01141830-I1

DRAWING TITLE:
EXISTING MAIN ROOF/ BULKHEAD PLAN

SEAL & SIGNATURE

STATE OF NEW YORK · BENJAMIN M. CORNELIUS · 076812 · LICENSED PROFESSIONAL ENGINEER

DATE: 05 DECEMBER 2025
PROJECT NO: P1842
DRAWN BY: LERA
CHECKED BY: LERA
DRAWING NUMBER: DMS-101.00
CADD FILE No:

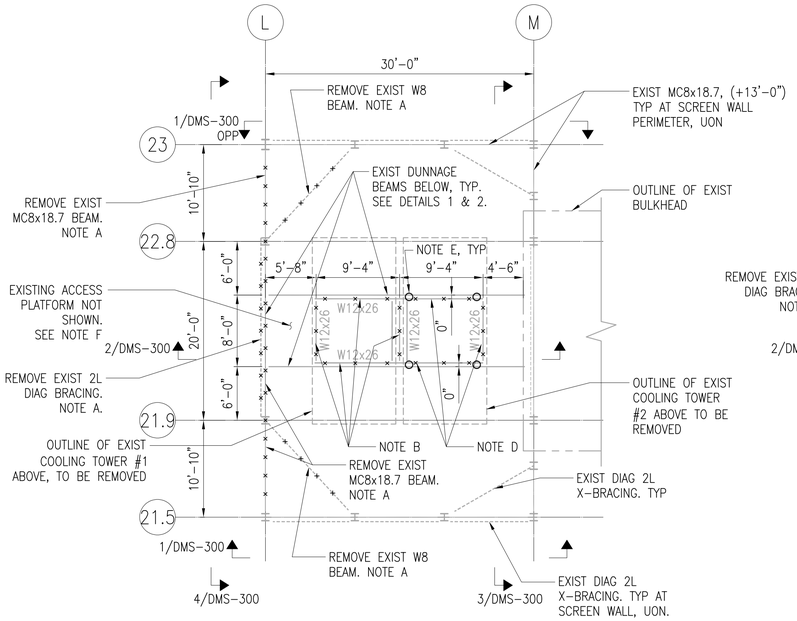

3 EXISTING DUNNAGE FRAMING PLAN (UPPER)

SCALE: 1/8"=1'-0"

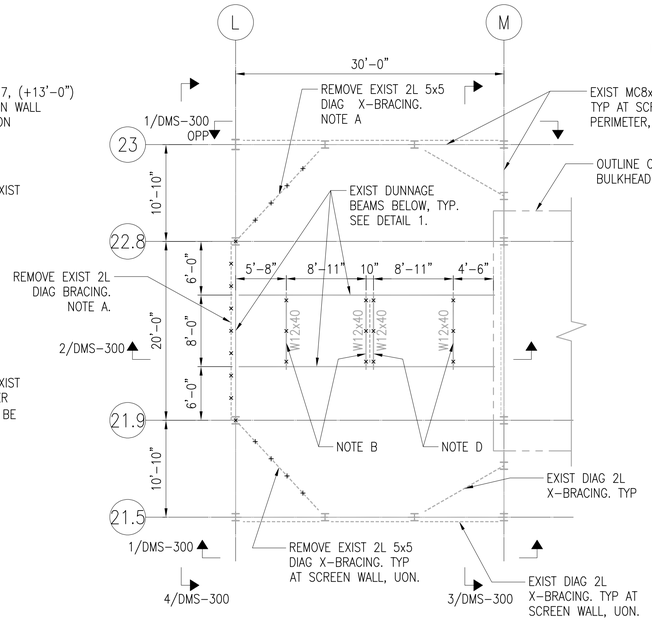

2 EXISTING DUNNAGE FRAMING PLAN (MID)

SCALE: 1/8"=1'-0"

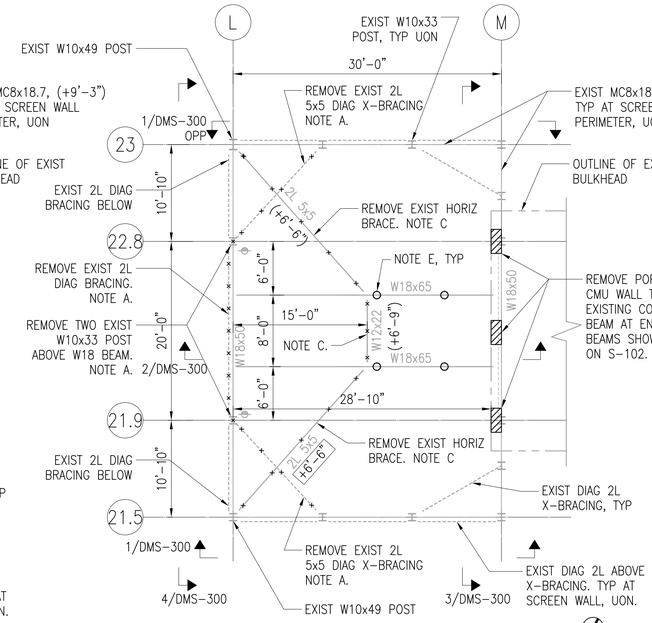

1 EXISTING DUNNAGE FRAMING PLAN (LOW)

SCALE: 1/8"=1'-0"

REFERENCED NOTES:

A. REMOVE EXISTING POSTS AND BRACING IN STEP 2 OF CONSTRUCTION SEQUENCE NOTES.

B. REMOVE EXISTING BEAMS AND BASE ISOLATORS IN STEP 4 OF CONSTRUCTION SEQUENCE NOTES.

C. REMOVE EXISTING BRACES AND BEAMS PER STEP 8 OF CONSTRUCTION SEQUENCE NOTES.

D. REMOVE EXISTING BEAMS AND BASE ISOLATORS IN STEP 12 OF CONSTRUCTION SEQUENCE NOTES.

E. PROVIDE TEMP SHORING BETWEEN LOW AND UPPER DUNNAGE IN STEP 3 OF CONSTRUCTION SEQUENCE NOTES.

F. REMOVE EXISTING ACCESS PLATFORM BEAMS, POSTS, BRACES, LADDER, HANDRAILS AND GRATING.

GENERAL NOTES:

1. REFER TO:
   S00X-SERIES DRAWINGS FOR GENERAL NOTES, DESIGN CRITERIA AND ABBREVIATIONS
   DMS-10X SERIES DRAWINGS FOR DEMOLITION PART PLANS
   DMS-30X SERIES DRAWINGS FOR DEMOLITION ELEVATIONS AND SECTIONS
   S1XX-SERIES DRAWINGS FOR PART PLANS
   S30X-SERIES DRAWINGS FOR ELEVATIONS AND SECTIONS
   S40X-SERIES DRAWINGS FOR TYPICAL DETAILS
   S50X SERIES DRAWINGS FOR SECTIONS AND DETAILS

2. TOP OF MAIN ROOF CONCRETE SLAB IS AT REFERENCE ELEVATION +137'-11" UNLESS OTHERWISE NOTED [XXX,] WHERE XXX IS MEASURED RELATIVE TO REFERENCE ELEVATION.

3. TOP OF LOW DUNNAGE STEEL IS AT (+7'-0"),
   TOP OF MID DUNNAGE STEEL IS AT (+8'-0"),
   AND TOP OF UPPER DUNNAGE STEEL IS AT (+9'-10") ABOVE REFERENCE ELEVATION, UNLESS OTHERWISE NOTED.

4. EXISTING CONSTRUCTION IS SHOWN FADED AND IS PROVIDED FOR REFERENCE ONLY. SEE ORIGINAL BUILDING DRAWINGS FOR EXISTING CONSTRUCTION INFORMATION AND VERIFY ALL PERTINENT CONDITIONS IN THE FIELD. SEE ARCHITECTURAL DRAWINGS FOR INFORMATION NOT SHOWN. CONFIRMING ALL CONDITIONS IN THE FIELD DURING CONSTRUCTION, WHERE FIELD CONDITIONS VARY SIGNIFICANTLY FROM THAT SHOWN IN THE DESIGN DRAWINGS. SUBMIT THESE CONDITIONS THROUGH THE ARCHITECT, FOR REVIEW.

5. SIZE LOCATION EXTENT AND CONDITION OF EXISTING WALLS, SLABS AND STRUCTURAL FRAMING INCLUDING COLUMNS AND BEAMS, HAVE BEEN ASSUMED AND ARE BASED ON LIMITED INFORMATION FROM EXISTING BUILDING DRAWINGS AND SITE OBSERVATIONS.

6. ALL EXISTING DUNNAGE AND SCREENWALL STEEL TO REMAIN SHALL BE STRIPPED OF EXISTING PAINT, CLEANED TO REMOVE CORROSION, AND REPAINTED WITH A ZINC-RICH PAINT TO PROTECT AGAINST FUTURE CORROSION. LOOSE BOLTS AND BOLTS FOUND WITH SEVERE CORROSION OR THAT ARE MISSING SHALL BE REPLACED WITH NEW BOLTS OF THE SAME SIZE AND GRADE.

7. SEE CONSTRUCTION SEQUENCE NOTES IN S-102.

8. LINETYPE LEGEND

   ———— EXIST FRAMING
   — — — EXIST BRACING

9. SYMBOL LEGEND

   × FRAMING TO BE REMOVED
   ⊕ VIBRATION ISOLATOR

© Copyright LERA CONSULTING STRUCTURAL ENGINEERS, R.L.L.P.

WARNING: IT IS A VIOLATION OF LAW FOR ANY PERSON, UNLESS ACTING UNDER THE DIRECTION OF A PROFESSIONAL, LICENSED IN THE STATE OF THIS PROJECT, TO ALTER IN ANY WAY THESE DRAWINGS. WHERE ANY ITEM IS ALTERED, THE SUPERVISING PROFESSIONAL SHALL AFFIX TO THE ITEM HIS SEAL AND THE INSCRIPTION "ALTERED BY" FOLLOWED BY HIS SIGNATURE, THE DATE, AND A SPECIFIC DESCRIPTION OF THE ALTERATION.

DOB APPROVAL STAMP

COOLING TOWER REPLACEMENT

BRONX DISTRICT ATTORNEY'S OFFICE
198 E 161ST STREET
NEW YORK, NEW YORK 10451

SPONSOR AGENCY:
DEPARTMENT OF CITYWIDE ADMINISTRATIVE SERVICES
MANHATTAN MUNICIPAL BUILDING
ONE CENTER STREET, 17 FLOOR SOUTH;
NEW YORK, NEW YORK 10007

MANAGING AGENCY:
DEPARTMENT OF DESIGN AND CONSTRUCTION
30-30 THOMSON AVENUE;
LONG ISLAND CITY, NEW YORK 10007

ARCHITECT:
NANDINEE PHOOKAN ARCHITECT
45 MAIN STREET SUITE #620
BROOKLYN NY 11201
P: 718 643 9500

STRUCTURAL ENGINEER:
LERA CONSULTING STRUCTURAL ENGINEERS
40 WALL STREET, FLOOR 23
NEW YORK, NY 10005
P: 212 750 9000

MEP ENGINEER:
DEWBERRY ENGINEERS
132 WEST 31ST STREET, SUITE 301
NEW YORK, NEW YORK 10001
P: 646 434 2822

PLUMBING ENGINEER:
AXON ENGINEERING SERVICES, LLC
222 OUTWATER LN, SUITE 3A
GARFIELD, NJ 07026
p: 917 677 2484

KEY PLAN:

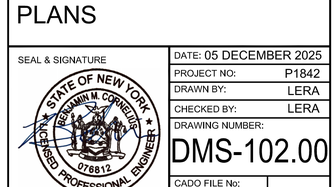

REVISIONS:

NUMBER	DESCRIPTION	DATE
	ISSUE FOR BID	01-27-2026

Department of Design and Construction

DIVISION OF PUBLIC BUILDINGS

CAPITAL PROJECT NUMBER:
PW77198CT

PROJECT
198 E 161ST STREET COOLING TOWER REPLACEMENT
198 E 161ST ST
BRONX, NY 10451

FOR THE:
Department of Citywide Administrative Services (DCAS)

DOB NOW APPLICATION: X01141830-I1

DRAWING TITLE:
ROOF DUNNAGE DEMOLITION PART PLANS

SEAL & SIGNATURE

STATE OF NEW YORK · BENJAMIN M. CORNELIUS · 076812 · LICENSED PROFESSIONAL ENGINEER

DATE:	05 DECEMBER 2025
PROJECT NO:	P1842
DRAWN BY:	LERA
CHECKED BY:	LERA
DRAWING NUMBER:	DMS-102.00
CADO FILE No:	

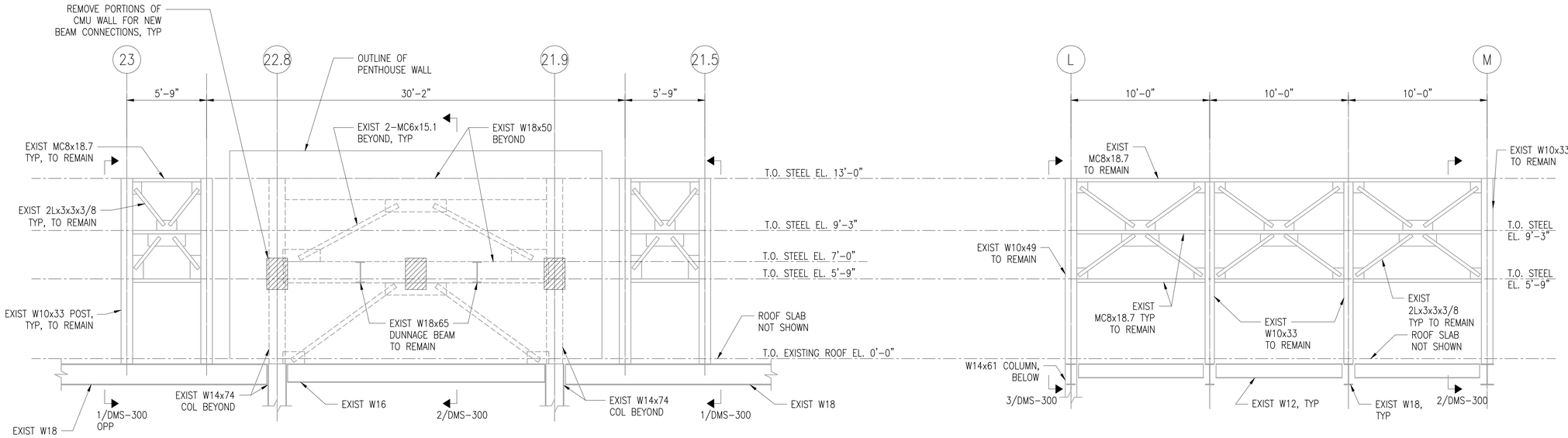

3 SECTION AT GRID-M
SCALE: 1/4"=1'-0"

1 ELEVATION ON GRID-21.5
SCALE: 1/4"=1'-0"

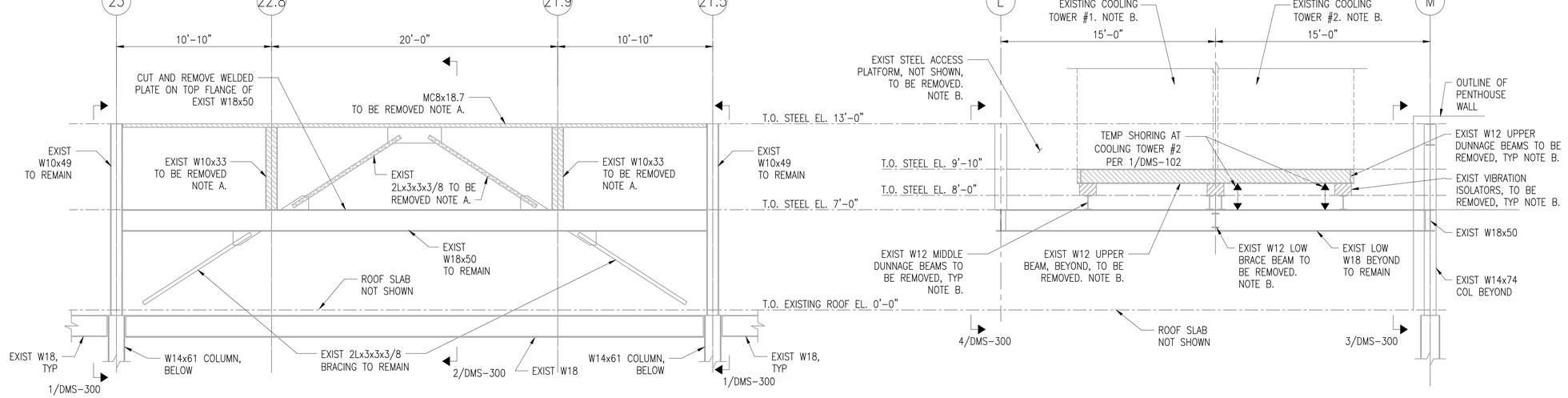

4 ELEVATION ON GRID-L
SCALE: 1/4"=1'-0"

2 SECTION AT EXIST DUNNAGE
SCALE: 1/4"=1'-0"

REFERENCE NOTES:

A. REMOVE EXISTING BRACES, BEAMS, AND POSTS PER STEP 2 OF CONSTRUCTION SEQUENCE NOTES.

B. SEE 1/DMS-102 AND CONSTRUCTION SEQUENCE ON S-102 FOR TIMING OF COOLING TOWER AND DUNNAGE BEAM REMOVALS.

C. SYMBOL LEGEND

FRAMING TO BE REMOVED
BRACING TO BE REMOVED

© Copyright LERA CONSULTING STRUCTURAL ENGINEERS, R.L.L.P.

WARNING: IT IS A VIOLATION OF LAW FOR ANY PERSON, UNLESS ACTING UNDER THE DIRECTION OF A PROFESSIONAL, LICENSED IN THE STATE OF THIS PROJECT, TO ALTER IN ANY WAY THESE DRAWINGS. WHERE ANY ITEM IS ALTERED, THE SUPERVISING PROFESSIONAL SHALL AFFIX TO THE ITEM HIS SEAL AND THE INSCRIPTION "ALTERED BY" FOLLOWED BY HIS SIGNATURE, THE DATE, AND A SPECIFIC DESCRIPTION OF THE ALTERATION.

DOB APPROVAL STAMP

COOLING TOWER REPLACEMENT

BRONX DISTRICT ATTORNEY'S OFFICE
198 E 161ST STREET
NEW YORK, NEW YORK 10451

SPONSOR AGENCY:
DEPARTMENT OF CITYWIDE ADMINISTRATIVE SERVICES
MANHATTAN MUNICIPAL BUILDING
ONE CENTER STREET, 17 FLOOR SOUTH;
NEW YORK, NEW YORK 10007

MANAGING AGENCY:
DEPARTMENT OF DESIGN AND CONSTRUCTION
30-30 THOMSON AVENUE;
LONG ISLAND CITY, NEW YORK 10007

ARCHITECT:
NANDINEE PHOOKAN ARCHITECT
45 MAIN STREET SUITE #620
BROOKLYN NY 11201
P: 718 643 9500

STRUCTURAL ENGINEER:
LERA CONSULTING STRUCTURAL ENGINEERS
40 WALL STREET, FLOOR 23
NEW YORK, NY 10005
P: 212 750 9000

MEP ENGINEER:
DEWBERRY ENGINEERS
132 WEST 31ST STREET, SUITE 301
NEW YORK, NEW YORK 10001
P: 646 434 2822

PLUMBING ENGINEER:
AXON ENGINEERING SERVICES, LLC
222 OUTWATER LN, SUITE 3A
GARFIELD, NJ 07026
p: 917 677 2484

KEY PLAN:

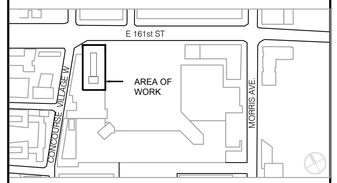

REVISIONS:

NUMBER	DESCRIPTION	DATE
	ISSUE FOR BID	01-27-2026

Department of Design and Construction

DIVISION OF PUBLIC BUILDINGS

CAPITAL PROJECT NUMBER:
PW77198CT

PROJECT
198 E 161ST STREET COOLING TOWER REPLACEMENT
198 E 161ST ST
BRONX, NY 10451

FOR THE:
Department of Citywide Administrative Services (DCAS)

DOB NOW APPLICATION: X01141830-I1

DRAWING TITLE:
ROOF DUNNAGE DEMOLITION ELEVATIONS AND SECTIONS

SEAL & SIGNATURE

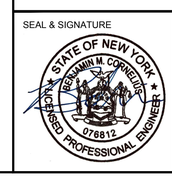

DATE:	05 DECEMBER 2025
PROJECT NO:	P1842
DRAWN BY:	LERA
CHECKED BY:	LERA
DRAWING NUMBER:	DMS-300.00
CADO FILE No:	

CONSTRUCTION SEQUENCE NOTES:

1. REMOVE EXISTING SCREEN WALL CLADDING. SEE ARCH DRAWINGS;
2. REMOVE VERTICAL 2L X-BRACING PER 1/DMS-102; AND REMOVE SOUTH SCREEN WALL FRAMING PER 4/DMS-300;
3. INSTALL SHORING BETWEEN THE CORRODED UPPER W12X40 DUNNAGE BEAMS AND LOW W18 GIRDERS, AS INDICATED SCHEMATICALLY ON 1 & 3/DMS-102. UNDER COOLING TOWER #2.
4. REMOVE COOLING TOWER #1 AND CUT AND REMOVE THE MIDDLE AND UPPER W12x40 BEAMS AND VIBRATION ISOLATORS BELOW TOWER #1, PER 2 AND 3/DMS-102 AND 2/DMS-300;
5. CLEAN AND REMOVE EXISTING PAINT, FINISH COATINGS AND SURFACE CORROSION, AND REPAINT EXPOSED PORTIONS OF EXISTING W18x50 AND W18x65 BEAMS TO REMAIN WITH ZINC RICH PAINT.
6. INSTALL NEW BUILT-UP CHANNELS AND BRIDGING UNDER EXISTING W18x50 PER PART PLAN 1 AND 4/DMS-300;
7. JACK AND SHIM W18x50 TO PRELOAD THE NEW CHANNELS AND REDUCE LOAD IN THE W18 AND SUPPORTING DIAGONAL BRACES. SEE 4/S-500 FOR JACKING DETAIL AND SEQUENCE. AFTER JACKING, INSTALL ANGLE BRACES BETWEEN EXISTING DIAG 2L BRACES AND NEW BRIDGING AT 2 LOCATIONS PER 4/S-501.
8. ACCOMPLISH THE FOLLOWING IN SUCCESSION PER 1/DMS-102 AND PART PLAN 1.:
   - A) REMOVE ONE HORIZONTAL 2L5 BRACE AND INSTALL NEW LOW W30 BEAM AND HORIZONTAL 2L5 BRACE;
   - B) REMOVE 2ND HORIZONTAL 2L BRACE AND INSTALL NEW W30 BEAM AND 2L5 BRACE;
   - C) REMOVE W12 BRACE BEAM AND INSTALL NEW W30 AND W12 BRACE BEAMS BETWEEN EXIST W18x65.
9. INSTALL NEW W16 AND W18 BEAMS AND HORIZONTAL 2L3 BRACES, TO EXTEND LOW DUNNAGE PER PART PLAN 1, AND INSTALL NEW W10 POSTS, MC8 BEAMS, AND 2L3 BRACE AT NEW SOUTH SCREEN WALL AND TO EXTEND EAST AND WEST SCREEN WALL PER DETAILS 1 AND 5/S-300;
10. INSTALL NEW W12 AND W14 UPPER DUNNAGE BEAMS AND HORIZONTAL 2L4 BRACING AT NEW COOLING TOWER 1, PER PART PLAN 2;
11. INSTALL NEW COOLING TOWER #1 WITH MOUNTING FRAME AND VIBRATION ISOLATORS ON NEW UPPER DUNNAGE PLATFORM PER MANUFACTURER'S WRITTEN INSTRUCTIONS;
12. AFTER COOLING TOWER #1 IS INSTALLED AND IN SERVICE, REMOVE COOLING TOWER #2 AND CUT AND REMOVE THE UPPER W12x40 BEAMS AND VIBRATION ISOLATORS BELOW TOWER #2 PER 2 & 3/DMS-102;
13. CLEAN AND REMOVE EXISTING PAINT, FINISH COATINGS, AND SURFACE CORROSION, AND REPAINT ALL STRUCTURE EXPOSED PORTIONS OF W18x65 BEAMS TO REMAIN WITH ZINC RICH PAINT.
14. INSTALL NEW W12 AND W14 UPPER DUNNAGE BEAMS AND BRACING AT NEW COOLING TOWER #2;
15. INSTALL NEW COOLING TOWER #2 WITH MOUNTING FRAME AND VIBRATION ISOLATORS ON NEW UPPER DUNNAGE PLATFORM PER MANUFACTURER'S WRITTEN INSTRUCTIONS;
16. INSTALL NEW GRATING PER PART PLAN 2. INSTALL LADDERS AND HANDRAILS. SEE ARCH DRAWINGS;
17. AT ALL EXISTING DUNNAGE AND SCREEN WALL STRUCTURE, CLEAN AND REMOVE EXISTING PAINT, FINISH COATINGS, AND SURFACE CORROSION, AND REPAINT ALL STRUCTURE WITH ZINC RICH PAINT; AND
18. INSTALL NEW ALUMINUM SCREEN WALL CLADDING. SEE ARCH DRAWINGS.

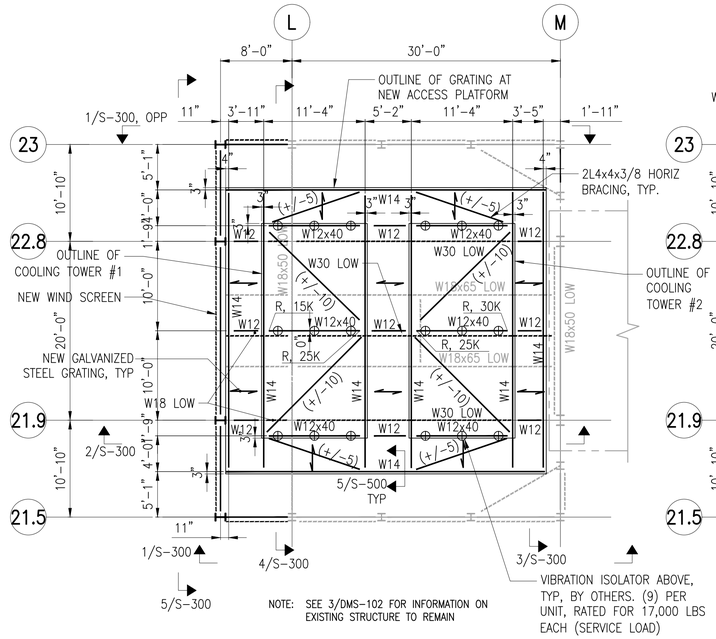

2 PROPOSED COOLING TOWER SUPPORT (HIGH)
SCALE: 1/8"=1'-0"

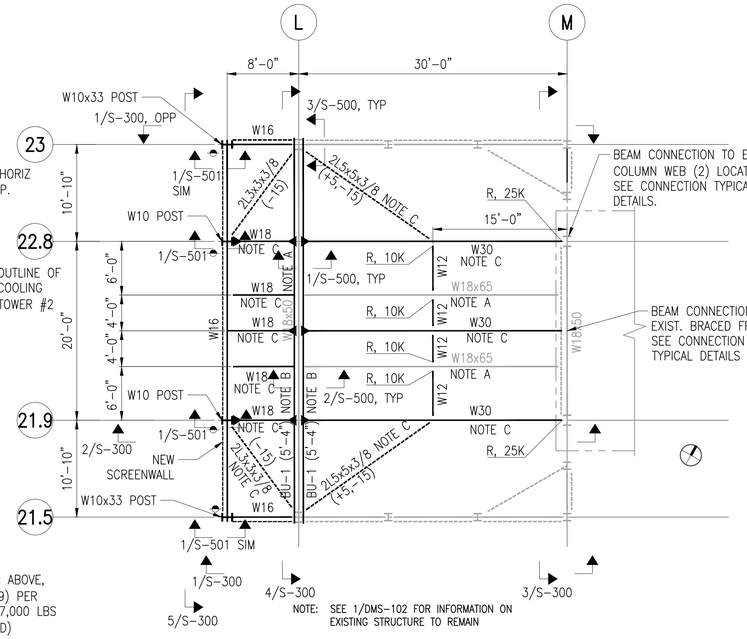

1 PROPOSED DUNNAGE EXTENSION (LOW)
SCALE: 1/8"=1'-0"

NOTES:

1. REFER TO:
   S00X-SERIES DRAWINGS FOR GENERAL NOTES, DESIGN CRITERIA AND ABBREVIATIONS
   DMS-10X SERIES DRAWINGS FOR DEMOLITION PART PLANS
   DMS-30X SERIES DRAWINGS FOR DEMOLITION ELEVATIONS AND SECTIONS
   S1XX-SERIES DRAWINGS FOR PART PLANS
   S30X-SERIES DRAWINGS FOR ELEVATIONS AND SECTIONS
   S40X-SERIES DRAWINGS FOR TYPICAL DETAILS
   S50X SERIES DRAWINGS FOR SECTIONS AND DETAILSS
2. TOP OF MAIN ROOF CONCRETE SLAB IS AT REFERENCE ELEVATION +137'-11" UNLESS OTHERWISE NOTED XXX, WHERE XXX IS MEASURED RELATIVE TO REFERENCE ELEVATION.
3. TOP OF NEW LOW DUNNAGE STEEL IS AT (+7'-0") AND TOP OF NEW HIGH DUNNAGE STEEL IS AT (+8'-2") ABOVE REFERENCE ELEVATION, UNLESS OTHERWISE NOTED.
4. EXISTING CONSTRUCTION IS SHOWN FADED AND IS PROVIDED FOR REFERENCE ONLY. SEE ORIGINAL BUILDING DRAWINGS FOR EXISTING CONSTRUCTION INFORMATION AND VERIFY ALL PERTINENT CONDITIONS IN THE FIELD. SEE ARCHITECTURAL DRAWINGS FOR INFORMATION NOT SHOWN. CONFIRMING ALL CONDITIONS IN THE FIELD DURING CONSTRUCTION, WHERE FIELD CONDITIONS VARY SIGNIFICANTLY FROM THAT SHOWN IN THE DESIGN DRAWINGS. SUBMIT THESE CONDITIONS THROUGH THE ARCHITECT, FOR REVIEW.
5. SIZE LOCATION EXTENT AND CONDITION OF EXISTING WALLS, SLABS AND STRUCTURAL FRAMING INCLUDING COLUMNS AND BEAMS, HAVE BEEN ASSUMED AND ARE BASED ON LIMITED INFORMATION FROM EXISTING BUILDING DRAWINGS AND SITE OBSERVATIONS.
6. SEE CONSTRUCTION SEQUENCE NOTES IN S-102.
7. ALL NEW ROOF TOP STEEL TO HAVE SHOP APPLIED ZINC-RICH PRIMER. DAMAGED PRIMER AND OTHER EXPOSED STEEL SURFACES DUE TO INSTALLATION PROCEDURES SHALL BE TOUCHED-UP WITH A ZINC-RICH REPAIR PAINT.
8. W12 = W12x26
   W14 = W14x53
   W16 = W16x67
   W18 = W18x65
   W30 = W30x90
   BU1 = BUILT UP BEAM, SEE 4/S-500
9. LINETYPE LEGEND
   - EXIST FRAMING
   - EXIST BRACING
   - NEW FRAMING
   - NEW BRACING
10. SYMBOL LEGEND
    - ⊕ VIBRATION ISOLATOR

REFERENCE NOTES:

A. SEE STEP 5 OF CONSTRUCTION SEQUENCE NOTES.

B. SEE STEPS 6 AND 7 OF CONSTRUCTION SEQUENCE NOTES. SEE 5/S-500 FOR BU-1 SECTION DETAIL.

C. SEE STEP 8 OF CONSTRUCTION SEQUENCE NOTES.

© Copyright LERA CONSULTING STRUCTURAL ENGINEERS, R.L.L.P.

WARNING: IT IS A VIOLATION OF LAW FOR ANY PERSON, UNLESS ACTING UNDER THE DIRECTION OF A PROFESSIONAL, LICENSED IN THE STATE OF THIS PROJECT, TO ALTER IN ANY WAY THESE DRAWINGS. WHERE ANY ITEM IS ALTERED, THE SUPERVISING PROFESSIONAL SHALL AFFIX TO THE ITEM HIS SEAL AND THE INSCRIPTION "ALTERED BY" FOLLOWED BY HIS SIGNATURE, THE DATE, AND A SPECIFIC DESCRIPTION OF THE ALTERATION.

DOB APPROVAL STAMP

COOLING TOWER REPLACEMENT

BRONX DISTRICT ATTORNEY'S OFFICE
198 E 161ST STREET
NEW YORK, NEW YORK 10451

SPONSOR AGENCY:
DEPARTMENT OF CITYWIDE ADMINISTRATIVE SERVICES
MANHATTAN MUNICIPAL BUILDING
ONE CENTER STREET, 17 FLOOR SOUTH;
NEW YORK, NEW YORK 10007

MANAGING AGENCY:
DEPARTMENT OF DESIGN AND CONSTRUCTION
30-30 THOMSON AVENUE;
LONG ISLAND CITY, NEW YORK 10007

ARCHITECT:
NANDINEE PHOOKAN ARCHITECT
45 MAIN STREET SUITE #620
BROOKLYN NY 11201
P: 718 643 9500

STRUCTURAL ENGINEER:
LERA CONSULTING STRUCTURAL ENGINEERS
40 WALL STREET, FLOOR 23
NEW YORK, NY 10005
P: 212 750 9000

MEP ENGINEER:
DEWBERRY ENGINEERS
132 WEST 31ST STREET, SUITE 301
NEW YORK, NEW YORK 10001
P: 646 434 2822

PLUMBING ENGINEER:
AXON ENGINEERING SERVICES, LLC
222 OUTWATER LN, SUITE 3A
GARFIELD, NJ 07026
p: 917 677 2484

KEY PLAN:

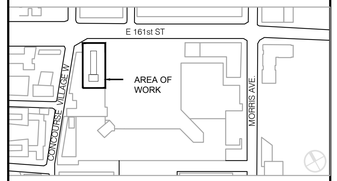

REVISIONS:

NUMBER	DESCRIPTION	DATE
	ISSUE FOR BID	01-27-2026

Department of Design and Construction

DIVISION OF PUBLIC BUILDINGS

CAPITAL PROJECT NUMBER:
PW77198CT

PROJECT
198 E 161ST STREET COOLING TOWER REPLACEMENT
198 E 161ST ST
BRONX, NY 10451

FOR THE:
Department of Citywide Administrative Services (DCAS)

DOB NOW APPLICATION: X01141830-I1

DRAWING TITLE:
ROOF DUNNAGE PART PLANS

SEAL & SIGNATURE



DATE:	05 DECEMBER 2025
PROJECT NO:	P1842
DRAWN BY:	LERA
CHECKED BY:	LERA
DRAWING NUMBER:	S-102.00
CADO FILE No:	
	8 OF 13

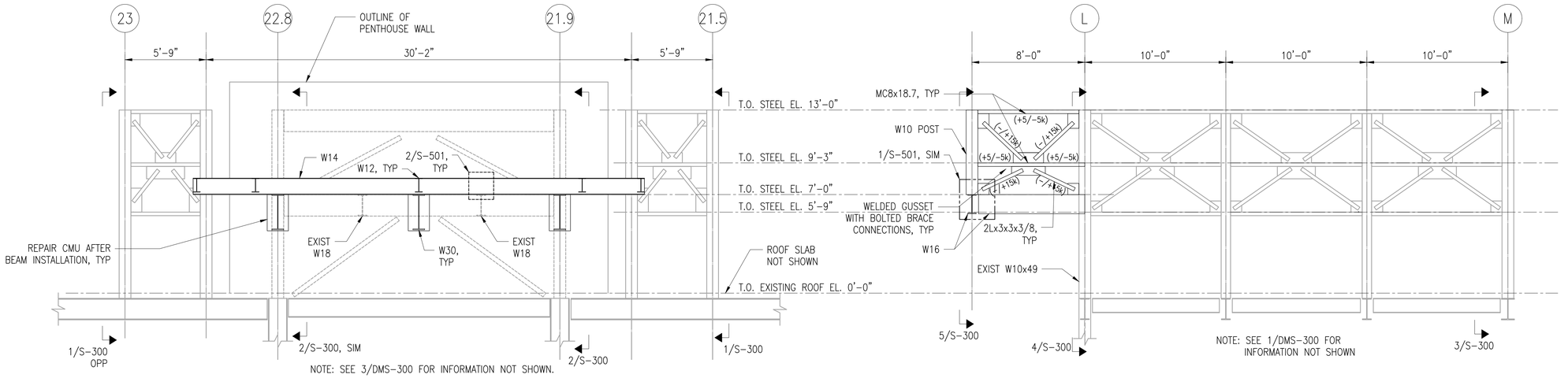

3 SECTION AT GRID-M
SCALE: 1/4"=1'-0"

1 ELEVATION ON GRID-21.5
SCALE: 1/4"=1'-0"

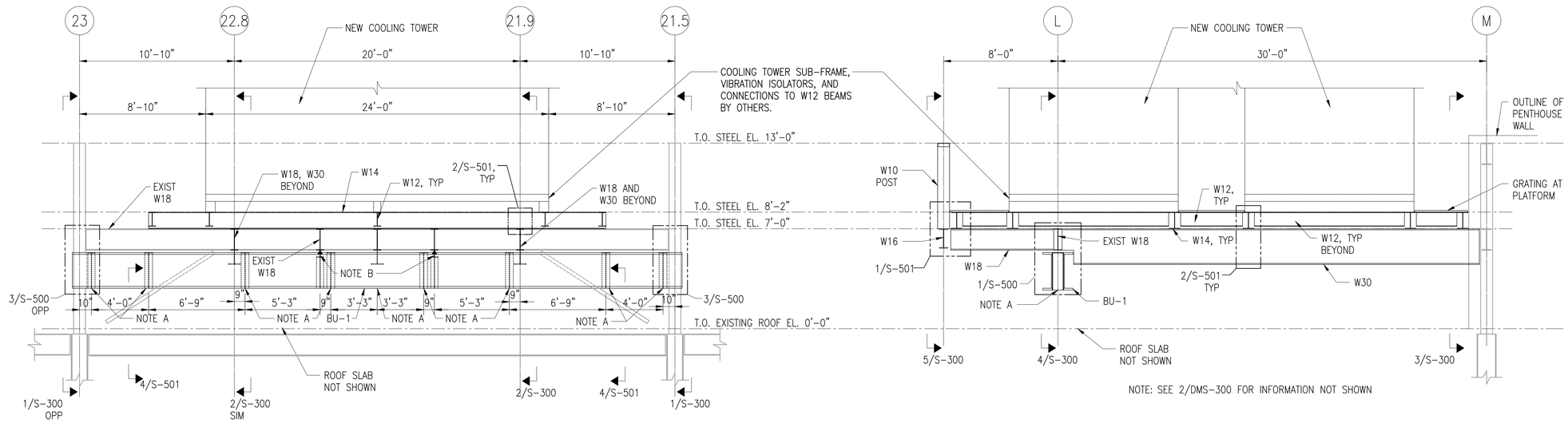

4 SECTION AT GRID-L
SCALE: 1/4"=1'-0"

NOTE A – 12x26 BRIDGING PER 2/S-500. (8) LOC AS NOTED

NOTE B – JACK AT 2 LOCATIONS BELOW END OF EXIST W18x65 IN STEP 7 OF SEQUENCE ON S-102. PROVIDE BRIDGING AT JACK LOCATIONS PER 4/S-500. SEE JACKING SEQUENCE ON S-500.

2 SECTION AT GRID-21.9
SCALE: 1/4"=1'-0"

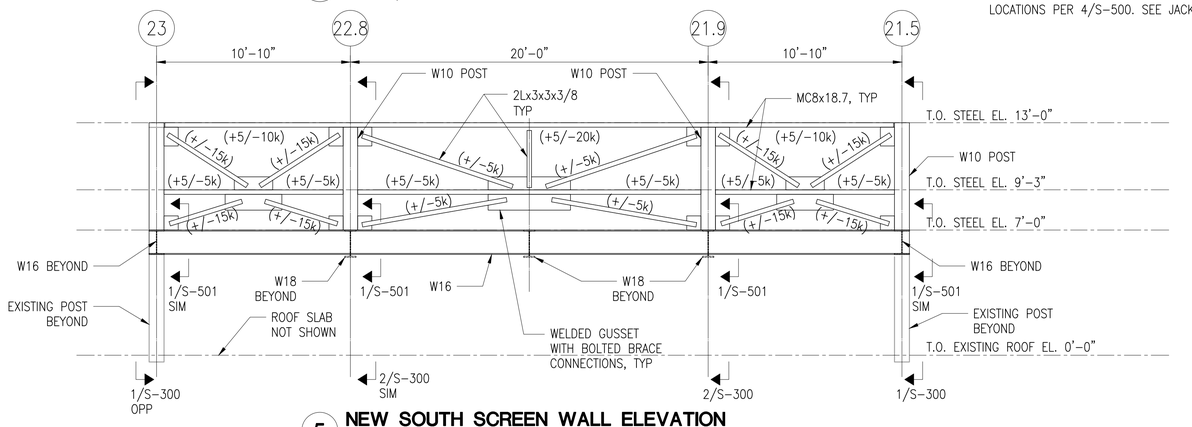

5 NEW SOUTH SCREEN WALL ELEVATION
SCALE: 1/4"=1'-0"

© Copyright LERA CONSULTING STRUCTURAL ENGINEERS, R.L.L.P.

WARNING: IT IS A VIOLATION OF LAW FOR ANY PERSON, UNLESS ACTING UNDER THE DIRECTION OF A PROFESSIONAL, LICENSED IN THE STATE OF THIS PROJECT, TO ALTER IN ANY WAY THESE DRAWINGS. WHERE ANY ITEM IS ALTERED, THE SUPERVISING PROFESSIONAL SHALL AFFIX TO THE ITEM HIS SEAL AND THE INSCRIPTION "ALTERED BY" FOLLOWED BY HIS SIGNATURE, THE DATE, AND A SPECIFIC DESCRIPTION OF THE ALTERATION.

DOB APPROVAL STAMP

COOLING TOWER REPLACEMENT

BRONX DISTRICT ATTORNEY'S OFFICE
198 E 161ST STREET
NEW YORK, NEW YORK 10451

SPONSOR AGENCY:
DEPARTMENT OF CITYWIDE ADMINISTRATIVE SERVICES
MANHATTAN MUNICIPAL BUILDING
ONE CENTER STREET, 17 FLOOR SOUTH;
NEW YORK, NEW YORK 10007

MANAGING AGENCY:
DEPARTMENT OF DESIGN AND CONSTRUCTION
30-30 THOMSON AVENUE;
LONG ISLAND CITY, NEW YORK 10007

ARCHITECT:
NANDINEE PHOOKAN ARCHITECT
45 MAIN STREET SUITE #620
BROOKLYN NY 11201
P: 718.643.9500

STRUCTURAL ENGINEER:
LERA CONSULTING STRUCTURAL ENGINEERS
40 WALL STREET, FLOOR 23
NEW YORK, NY 10005
P: 212 750 9000

MEP ENGINEER:
DEWBERRY ENGINEERS
132 WEST 31ST STREET, SUITE 301
NEW YORK, NEW YORK 10001
P: 646 434 2822

PLUMBING ENGINEER:
AXON ENGINEERING SERVICES, LLC
222 OUTWATER LN, SUITE 3A
GARFIELD, NJ 07026
p: 917 677 2484

KEY PLAN:

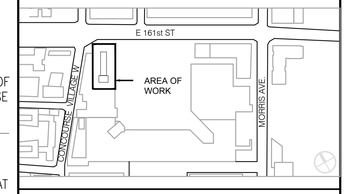

REVISIONS:

NUMBER	DESCRIPTION	DATE
	ISSUE FOR BID	01-27-2026

NYC DDC **Department of Design and Construction**

DIVISION OF PUBLIC BUILDINGS

CAPITAL PROJECT NUMBER:
PW77198CT

PROJECT
198 E 161ST STREET COOLING TOWER REPLACEMENT
198 E 161ST ST
BRONX, NY 10451

FOR THE:
Department of Citywide Administrative Services (DCAS)

DOB NOW APPLICATION: X01141830-I1

DRAWING TITLE:
ROOF DUNNAGE ELEVATIONS AND SECTIONS

SEAL & SIGNATURE

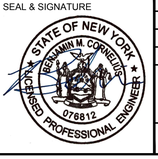

DATE:	05 DECEMBER 2025
PROJECT NO:	P1842
DRAWN BY:	LERA
CHECKED BY:	LERA
DRAWING NUMBER:	S-300.00
CADO FILE No:	

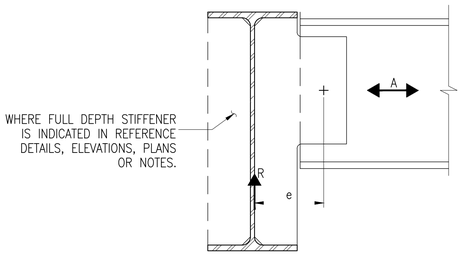

E.2 BEAM FRAMING TO GIRDER - EXTENDED CONFIGURATION

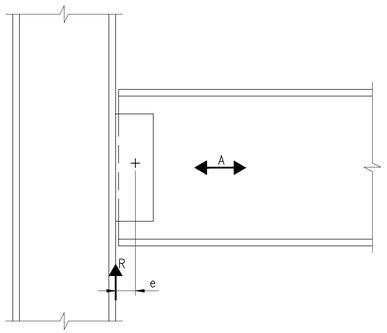

E.3 BEAM OR GIRDER FRAMING TO COLUMN

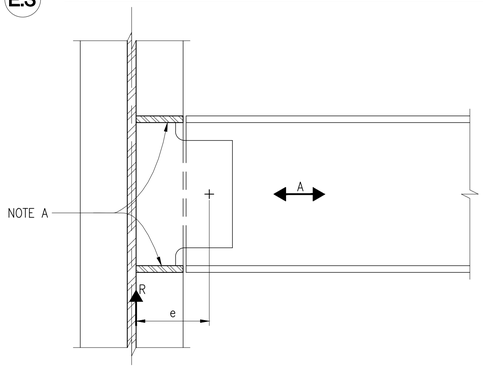

NOTE A: PROVIDE STIFFENERS WHERE FORCE (A) EXISTS. PROPORTION STIFFENERS AND WELDS FOR FORCE (A). IN ADDITION PROVIDE STIFFENERS WHERE REQUIRED FOR THE DESIGN OF THE EXTENDED SHEAR TAB.

E.4 BEAM OR GIRDER FRAMING TO W COLUMN WEB - EXTENDED CONFIGURATION

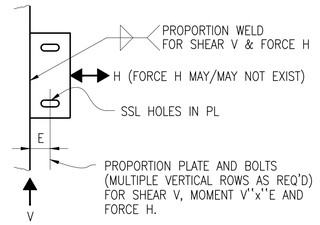

NOTE: CONTRACTOR'S OPTION TO PROVIDE STANDARD ROUND HOLES IN CONNECTION PL OR SHORT-SLOTTED HOLES AS SHOWN ABOVE.

D BEAM END SHEAR BAR CONNECTION DETAIL

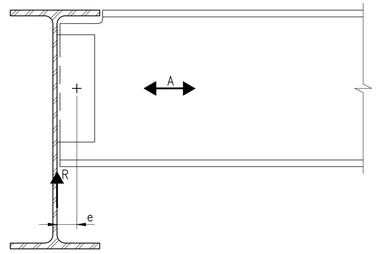

UNLESS INDICATED OTHERWISE

E.1 BEAM FRAMING TO GIRDER

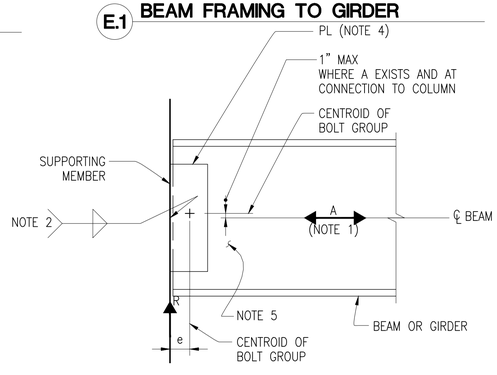

NOTES:

1. FORCE A MAY/MAY NOT EXIST. SEE PLANS, ELEVATIONS AND DETAILS.
2. PROPORTION WELD FOR VERTICAL REACTION (R) AND FORCE (A), OR PLASTIC BENDING MOMENT CAPACITY OF PLATE, WHICHEVER IS LARGER.
3. PROPORTION PLATE AND BOLTS FOR VERTICAL REACTION (R), MOMENT (R x e), AND FORCE (A). PROVIDE MULTIPLE VERTICAL ROWS AS REQUIRED. WHERE ONLY A SINGLE ROW OF BOLTS IS REQUIRED, AND DIMENSIONAL LIMITATIONS OF THE CONVENTIONAL CONFIGURATION ARE MET, ECCENTRICITY (e), MAY BE IGNORED IN ACCORDANCE WITH AISC MANUAL OF STEEL CONSTRUCTION.
4. CONTRACTOR'S OPTION TO PROVIDE STANDARD ROUND HOLES IN CONNECTION PL OR HORIZONTAL SHORT-SLOTTED HOLES IN CONNECTION PL.
5. REINFORCE BEAM WEB WITH A DOUBLER PLATE, AS REQUIRED, FOR PRESCRIBED FORCES.
6. REFER TO BEAM COPE TYPICAL DETAIL REGARDING ALL COPES AND CUTS.

E SINGLE PLATE CONNECTION

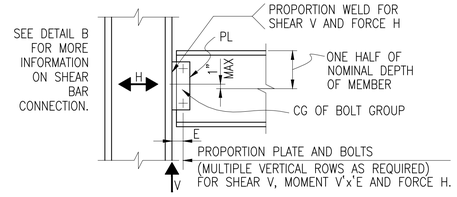

B.1 BEAM OR GIRDER FRAMING TO W COLUMN FLANGE

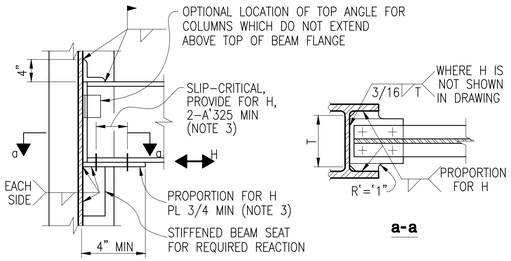

B.2 BEAM OR GIRDER FRAMING TO W COLUMN WEB

NOTES:

1. PROVIDE ADDITIONAL COLUMN WELDING AND/OR INTERNAL DIAPHRAGMS OR PLATES AS REQUIRED BY CONNECTION FORCES.
2. TOP FLANGE PLATES MAY BE USED AT THE CONTRACTOR'S OPTION. WHERE TOP PLATES ARE USED, PROVIDE STEEL DECK SUPPORT PL 3/8'x'3.
3. MINIMUM REQUIREMENTS SHOWN ARE TO BE PROVIDED EVEN WHERE H IS NOT INDICATED IN DRAWINGS.
4. WHERE NOTED THUS V,''H* IN DRAWINGS, H IS TO BE TAKEN THROUGH THE TOP AND BOTTOM FLANGES OF THE BEAM.

B BEAM OR GIRDER FRAMING TO WIDE FLANGE COLUMN

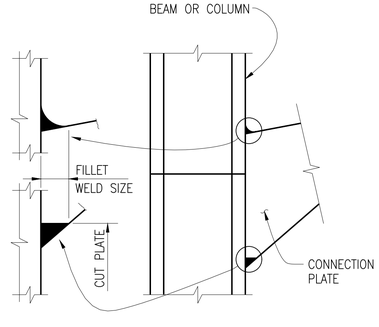

C SEAL WELDS AT CONNECTION PLATES EXPOSED TO WEATHER

MINIMUM WELD SCHEDULE	
MATERIAL THICKNESS OF THICKER PART JOINED	MINIMUM WELD
3/4" AND LESS	1/4"
OVER 3/4" TO 1-1/2"	5/16"
OVER 1-1/2" TO 2-1/4"	3/8"
OVER 2-1/4" TO 6"	1/2"

NOTES:

1. UNLESS OTHERWISE NOTED IN THE STRUCTURAL DRAWINGS, WELDS SHALL BE OF THE SIZE NOT LESS THAN GIVEN IN THE SCHEDULE.
2. NOTATION IN THE DRAWINGS SHOWS "MIN" ASSOCIATION WITH THE APPROPRIATE FILLET OR PARTIAL PENETRATION WELD SYMBOL. FOR EXAMPLE:



THE MINIMUM WELD SIZE APPLIES TO THE LEG DIMENSION OF FILLET WELDS AND TO THE MINIMUM EFFECTIVE THROAT OF PARTIAL PENETRATION GROOVE WELDS.

3. THE MINIMUM WELD SIZE NEED NOT EXCEED THE THICKNESS OF THE THINNER PART JOINED UNLESS A LARGER SIZE IS REQUIRED BY CALCULATED STRESS.

A.1 MINIMUM WELD SCHEDULE

1. WHERE SPECIFIED IN THE DRAWINGS AS PP, THE WELD SIZE OF PARTIAL PENETRATION GROOVE WELDS IS THE EFFECTIVE THROAT THICKNESS.
2. THE REQUIRED DEPTH OF CHAMFER IN THE PIECES TO BE WELDED IS DEPENDENT ON THE TYPE OF WELDING PROCESS, THE WELDING POSITION AND THE INCLUDED ANGLE AT THE ROOT OF THE GROOVE AS FOLLOWS:

WELDING PROCESS	WELDING POSITION	INCLUDED ANGLE AT ROOT OF GROOVE	DEPTH OF CHAMFER
SHIELDED METAL ARC	ALL	BEVEL 40° TO 55°	EFFECTIVE DEPTH''+''1/8"
		V-GROOVE 55° TO 70°	EFFECTIVE DEPTH
GAS METAL ARC OR FLUX CORED ARC	HORIZONTAL OR FLAT	BEVEL 40° TO 55°	EFFECTIVE DEPTH
	VERTICAL OR OVERHEAD	BEVEL 40° TO 55°	EFFECTIVE DEPTH''+''1/8"
	ALL	V-GROOVE 55° TO 70°	EFFECTIVE DEPTH
SUBMERGED ARC	FLAT	BEVEL 40° TO 55°	EFFECTIVE DEPTH
		V-GROOVE 55° TO 70°	EFFECTIVE DEPTH

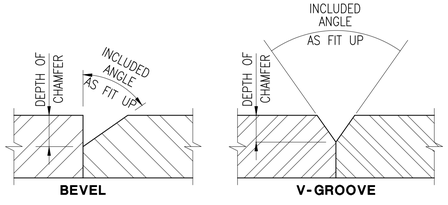

A.2 PARTIAL PENETRATION GROOVE WELDS

A WELDS

DOB APPROVAL STAMP

© Copyright LERA CONSULTING STRUCTURAL ENGINEERS, R.L.L.P.

WARNING: IT IS A VIOLATION OF LAW FOR ANY PERSON, UNLESS ACTING UNDER THE DIRECTION OF A PROFESSIONAL, LICENSED IN THE STATE OF THIS PROJECT, TO ALTER IN ANY WAY THESE DRAWINGS. WHERE ANY ITEM IS ALTERED, THE SUPERVISING PROFESSIONAL SHALL AFFIX TO THE ITEM HIS SEAL AND THE INSCRIPTION "ALTERED BY" FOLLOWED BY HIS SIGNATURE, THE DATE, AND A SPECIFIC DESCRIPTION OF THE ALTERATION.

COOLING TOWER REPLACEMENT

BRONX DISTRICT ATTORNEY'S OFFICE
198 E 161ST STREET
NEW YORK, NEW YORK 10451

SPONSOR AGENCY:
DEPARTMENT OF CITYWIDE ADMINISTRATIVE SERVICES
MANHATTAN MUNICIPAL BUILDING
ONE CENTER STREET, 17 FLOOR SOUTH;
NEW YORK, NEW YORK 10007

MANAGING AGENCY:
DEPARTMENT OF DESIGN AND CONSTRUCTION
30-30 THOMSON AVENUE;
LONG ISLAND CITY, NEW YORK 10007

ARCHITECT:
NANDINEE PHOOKAN ARCHITECT
45 MAIN STREET SUITE #620
BROOKLYN NY 11201
P: 718 643 9500

STRUCTURAL ENGINEER:
LERA CONSULTING STRUCTURAL ENGINEERS
40 WALL STREET, FLOOR 23
NEW YORK, NY 10005
P: 212 750 9000

MEP ENGINEER:
DEWBERRY ENGINEERS
132 WEST 31ST STREET, SUITE 301
NEW YORK, NEW YORK 10001
P: 646 434 2822

PLUMBING ENGINEER:
AXON ENGINEERING SERVICES, LLC
222 OUTWATER LN, SUITE 3A
GARFIELD, NJ 07026
p: 917 677 2484

KEY PLAN:

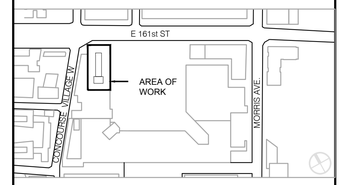

REVISIONS:

NUMBER	DESCRIPTION	DATE
	ISSUE FOR BID	01-27-2026

Department of Design and Construction

DIVISION OF PUBLIC BUILDINGS

CAPITAL PROJECT NUMBER:
PW77198CT

PROJECT
198 E 161ST STREET COOLING TOWER REPLACEMENT
198 E 161ST ST
BRONX, NY 10451

FOR THE:
Department of Citywide Administrative Services (DCAS)

DOB NOW APPLICATION: X01141830-I1

DRAWING TITLE:
CONNECTIONS TYPICAL DETAILS

SEAL & SIGNATURE

STATE OF NEW YORK · BENJAMIN M. CORNELIUS · 076812 · LICENSED PROFESSIONAL ENGINEER

DATE:	05 DECEMBER 2025
PROJECT NO:	P1842
DRAWN BY:	LERA
CHECKED BY:	LERA
DRAWING NUMBER:	S-400.00
CADO FILE No:	

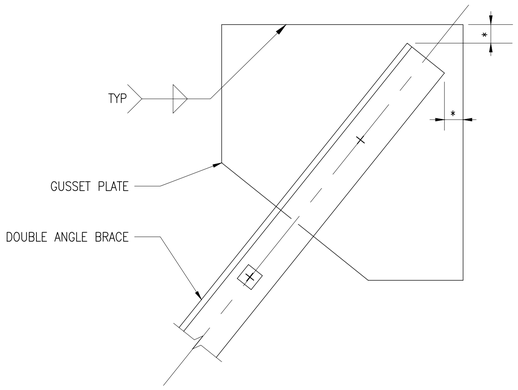

C.1 ANGLE BRACE END CONNECTION

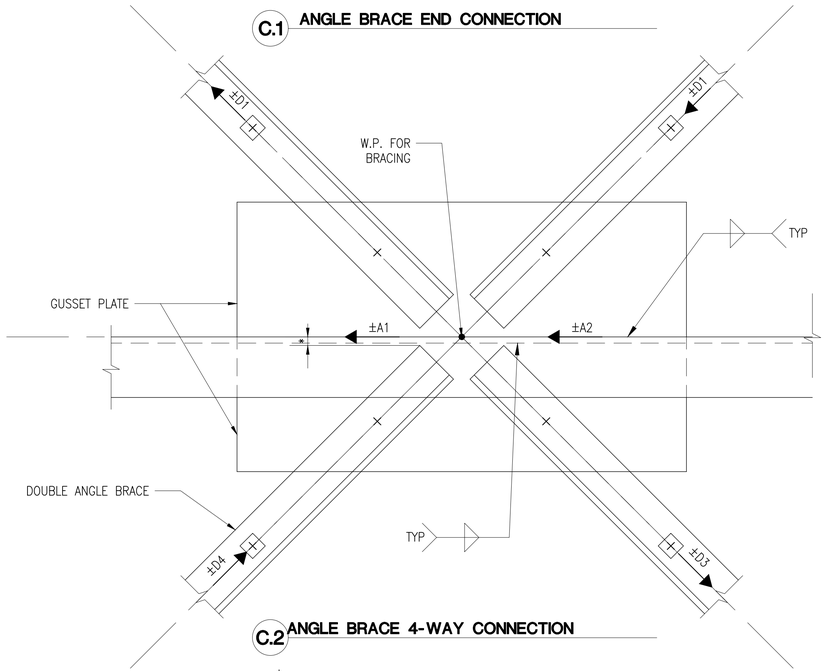

C.2 ANGLE BRACE 4-WAY CONNECTION

* KEEP INDICATED DIMENSIONS AS SMALL AS IS PRACTICABLE TO REDUCE THE BUCKLING LENGTH OF GUSSET PLATE.

NOTES :

1. PROPORTION CONNECTIONS FOR THE FOLLOWING:
   - –DIAGONAL BRACE FORCES (D) SHOWN IN BRACING ELEVATIONS
   - –BEAM VERTICAL REACTIONS (R) SHOWN IN THE MINIMUM REACTIONS TABLE EXCEPT AS NOTED OTHERWISE IN PLAN
   - –BENDING MOMENTS (M) AND BEAM AXIAL FORCES (A) TRANSMITTED ACROSS JOINT AS SHOWN IN BRACING ELEVATIONS AND PLANS.
   - –REFER TO SINGLE PLATE CONNECTION TYPICAL DETAIL FOR ADDITIONAL INFORMATION REGARDING CONNECTION DESIGN.
2. CONNECTIONS SHALL BE DESIGNED PER THE UNIFORM FORCE METHOD AS PER THE AISC MANUAL. DIAGONAL BRACE WORKPOINTS SHALL BE AT COLUMN AND BEAM CENTERLINES AS SHOWN UNLESS OTHERWISE NOTED. CONNECTION FORCES SHALL BE CONSIDERED CONCURRENTLY. INCREASES IN ALLOWABLE STRESSES ARE NOT PERMITTED.
3. CONNECTION FORCE SYMBOLS:

   ◄► INDICATES DIRECTION OF FORCE.
4. ALL BOLTS SHALL BE SLIP–CRITICAL BOLTS.
5. UON, PERPENDICULAR MEMBERS NOT SHOWN FOR CLARITY.

C BRACE CONNECTIONS

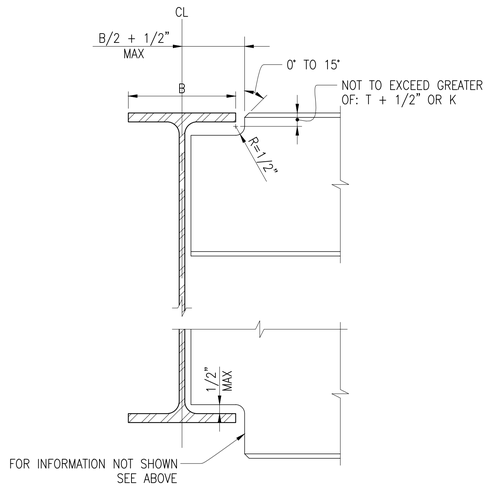

NOTES:

1. AS PART OF CONTRACTOR'S CONNECTION DESIGN, ALL BEAM COPES AND CUTS SHALL BE REVIEWED IN ACCORDANCE WITH AISC MANUAL OF STEEL CONSTRUCTION. REINFORCE BEAM WEB AS REQUIRED.

A BEAM COPE

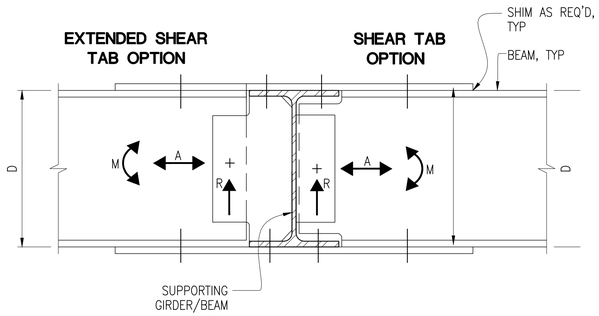

BEAM AND SUPPORTING MEMBER OF THE SAME DEPTH

NOTES:

1. PROPORTION TOP AND BOTTOM PLATES, WELDS AND BOLTS FOR FORCE (F=M/D). THE VALUE OF (M) IS GIVEN IN DRAWINGS. REINFORCE BEAM FLANGE AS REQUIRED DUE TO NET SECTION.
2. PROPORTION BEAM WEB CONNECTION FOR VERTICAL REACTION (R). THE VALUE OF (R) IS GIVEN IN DRAWINGS. REFER TO SINGLE PLATE CONNECTION FOR ADDITIONAL INFORMATION REGARDING WEB CONNECTION. ECCENTRICITY FROM BOLT GROUP CENTROID TO FACE OF GIRDER WEB IS ACCOUNTED FOR IN MOMENT.
3. PROPORTION BEAM–COLUMN CONNECTION FOR THE ADDITIONAL EFFECTS OF FORCE (A), WHEREVER THIS FORCE IS GIVEN IN DRAWINGS.
4. REFER TO BEAM COPE TYPICAL DETAIL REGARDING ALL COPES AND CUTS.
5. CONTRACTOR'S OPTION TO PROVIDE A SHOP WELDED CONNECTION.

B BEAM-GIRDER MOMENT CONNECTION

© Copyright LERA CONSULTING STRUCTURAL ENGINEERS, R.L.L.P.

WARNING: IT IS A VIOLATION OF LAW FOR ANY PERSON, UNLESS ACTING UNDER THE DIRECTION OF A PROFESSIONAL, LICENSED IN THE STATE OF THIS PROJECT, TO ALTER IN ANY WAY THESE DRAWINGS. WHERE ANY ITEM IS ALTERED, THE SUPERVISING PROFESSIONAL SHALL AFFIX TO THE ITEM HIS SEAL AND THE INSCRIPTION "ALTERED BY" FOLLOWED BY HIS SIGNATURE, THE DATE, AND A SPECIFIC DESCRIPTION OF THE ALTERATION.

DOB APPROVAL STAMP

COOLING TOWER REPLACEMENT

BRONX DISTRICT ATTORNEY'S OFFICE
198 E 161ST STREET
NEW YORK, NEW YORK 10451

SPONSOR AGENCY:
DEPARTMENT OF CITYWIDE ADMINISTRATIVE SERVICES
MANHATTAN MUNICIPAL BUILDING
ONE CENTER STREET, 17 FLOOR SOUTH;
NEW YORK, NEW YORK 10007

MANAGING AGENCY:
DEPARTMENT OF DESIGN AND CONSTRUCTION
30-30 THOMSON AVENUE;
LONG ISLAND CITY, NEW YORK 10007

ARCHITECT:
NANDINEE PHOOKAN ARCHITECT
45 MAIN STREET SUITE #620
BROOKLYN NY 11201
P: 718.643.9500

STRUCTURAL ENGINEER:
LERA CONSULTING STRUCTURAL ENGINEERS
40 WALL STREET, FLOOR 23
NEW YORK, NY 10005
P: 212 750 9000

MEP ENGINEER:
DEWBERRY ENGINEERS
132 WEST 31ST STREET, SUITE 301
NEW YORK, NEW YORK 10001
P: 646 434 2822

PLUMBING ENGINEER:
AXON ENGINEERING SERVICES, LLC
222 OUTWATER LN, SUITE 3A
GARFIELD, NJ 07026
p: 917 677 2484

KEY PLAN:

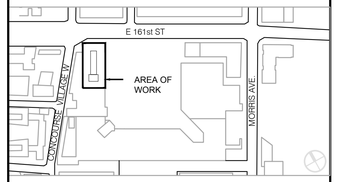

REVISIONS:

NUMBER	DESCRIPTION	DATE
	ISSUE FOR BID	01-27-2026

Department of Design and Construction

DIVISION OF PUBLIC BUILDINGS

CAPITAL PROJECT NUMBER:
PW77198CT

PROJECT
198 E 161ST STREET COOLING TOWER REPLACEMENT
198 E 161ST ST
BRONX, NY 10451

FOR THE:
Department of Citywide Administrative Services (DCAS)

DOB NOW APPLICATION: X01141830-I1

DRAWING TITLE:
CONNECTIONS TYPICAL DETAILS

SEAL & SIGNATURE



DATE:	05 DECEMBER 2025
PROJECT NO:	P1842
DRAWN BY:	LERA
CHECKED BY:	LERA
DRAWING NUMBER:	S-401.00
CADD FILE No:	

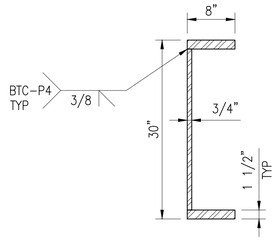

NOTE: ALL STEEL PLATES TO BE FY50

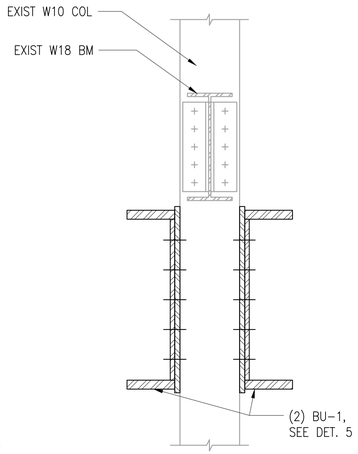

b-b

5 BUILT-UP BEAM: BU-1
SCALE: 1"=1'-0"

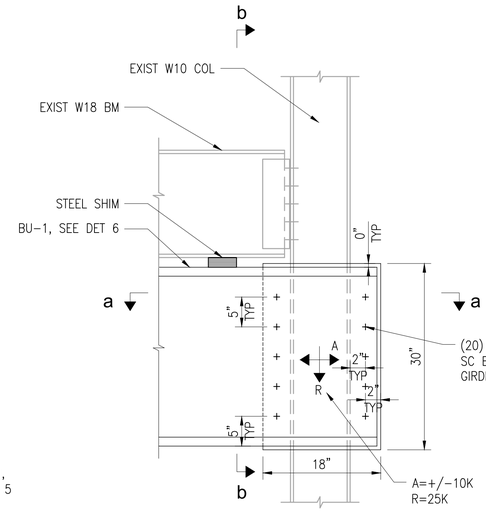

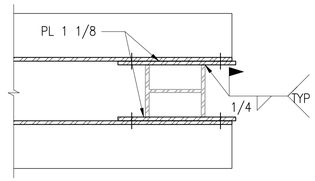

a-a

3 BUILT-UP BEAM TO COLUMN CONNECTION
SCALE: 1"=1'-0"

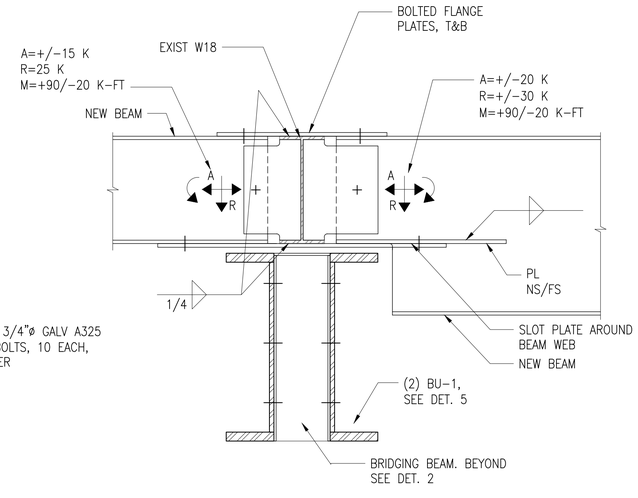

NOTE: SEE BEAM-GIRDER MOMENT CONNECTION TYPICAL DETAIL B/S-401

1 MOMENT CONNECTION THROUGH EXISTING BEAM
SCALE: 1"=1'-0"

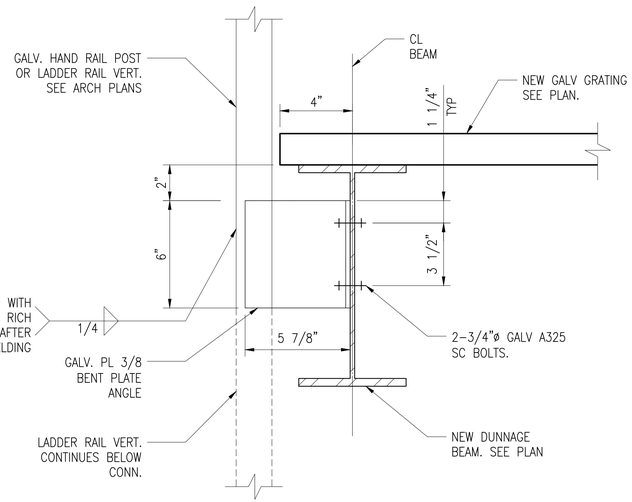

SEE ARCH DRAWINGS FOR LOCATION AND
DETAILS OF ACCESS LADDER

6 TYPICAL RAIL POST CONNECTION
SCALE: 3"=1'-0"

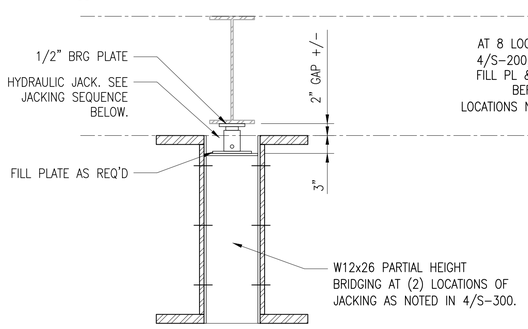

SEE DET. 2 FOR INFORMATION NOT SHOWN

4 BRIDGING AND JACKING AT REINFORCED BEAM
SCALE: 1"=1'-0"

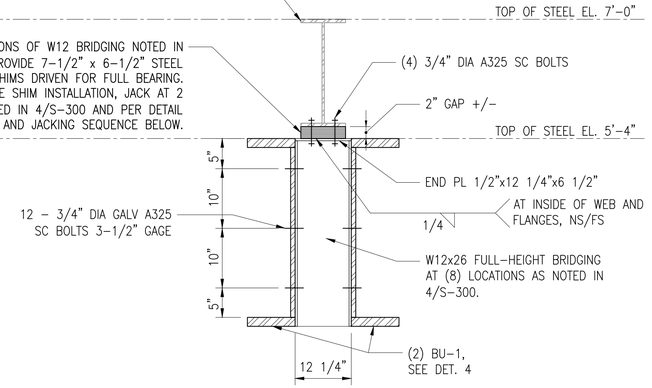

2 BRIDGING AND SHIMMING AT REINFORCED BEAM
SCALE: 1"=1'-0"

PROPOSED JACKING SEQUENCE:

1. BU-1 CHANNELS AND ALL W12 BRIDGING (8 LOCATIONS) SHALL BE INSTALLED, PER 1/S-102, 4/S-300, AND DETAILS 2, 3, AND 5, BEFORE COMMENCING JACKING.
2. INSTALL JACKS BETWEEN BRIDING TOP PLATE AND BOT FLANGE OF EXIST W18x50, AT TWO LOCATIONS NOTED IN 4/S-300 AND PER DETAIL 4. JACKS TO BE ENERPAC RCS101 11.2 TON JACKS OR EQUIVALENT.
3. SIMULTANEOUSLY INCREASE LOAD IN BOTH JACKS TO A TOTAL OF 15 KIPS OR 5/8 INCH OF UPWARD MOVEMENT AT THE JACKS, WHICHEVER IS REACHED FIRST. NOTIFY LERA WHERE MOVEMENT LIMIT IS REACHED FIRST.
4. WHILE HOLDING JACKING LOAD, INSTALL STEEL FILL PLATES AND SHIMS BETWEEN TOP PLATES OF ALL W12 BRIDGING AND BOT FLANGE OF EXISTING W18x50 ABOVE. SHIMS SHALL BE DRIVEN IN PLACE TO ACHIEVE FULL BEARING.
5. AFTER ALL SHIMS ARE INSTALLED, REMOVE JACK LOAD AND CONFIRM ALL SHIMS ARE ENGAGED AND NOT MOVING.

© Copyright LERA CONSULTING STRUCTURAL ENGINEERS, R.L.L.P.

WARNING: IT IS A VIOLATION OF LAW FOR ANY PERSON, UNLESS ACTING UNDER THE DIRECTION OF A PROFESSIONAL, LICENSED IN THE STATE OF THIS PROJECT, TO ALTER IN ANY WAY THESE DRAWINGS. WHERE ANY ITEM IS ALTERED, THE SUPERVISING PROFESSIONAL SHALL AFFIX TO THE ITEM HIS SEAL AND THE INSCRIPTION "ALTERED BY" FOLLOWED BY HIS SIGNATURE, THE DATE, AND A SPECIFIC DESCRIPTION OF THE ALTERATION.

DOB APPROVAL STAMP

COOLING TOWER REPLACEMENT

BRONX DISTRICT ATTORNEY'S OFFICE
198 E 161ST STREET
NEW YORK, NEW YORK 10451

SPONSOR AGENCY:
DEPARTMENT OF CITYWIDE ADMINISTRATIVE SERVICES
MANHATTAN MUNICIPAL BUILDING
ONE CENTER STREET, 17 FLOOR SOUTH;
NEW YORK, NEW YORK 10007

MANAGING AGENCY:
DEPARTMENT OF DESIGN AND CONSTRUCTION
30-30 THOMSON AVENUE;
LONG ISLAND CITY, NEW YORK 10007

ARCHITECT:
NANDINEE PHOOKAN ARCHITECT
45 MAIN STREET SUITE #620
BROOKLYN NY 11201
P: 718.643.9500

STRUCTURAL ENGINEER:
LERA CONSULTING STRUCTURAL ENGINEERS
40 WALL STREET, FLOOR 23
NEW YORK, NY 10005
P: 212 750 9000

MEP ENGINEER:
DEWBERRY ENGINEERS
132 WEST 31ST STREET, SUITE 301
NEW YORK, NEW YORK 10001
P: 646 434 2822

PLUMBING ENGINEER:
AXON ENGINEERING SERVICES, LLC
222 OUTWATER LN, SUITE 3A
GARFIELD, NJ 07026
p: 917 677 2484

KEY PLAN:

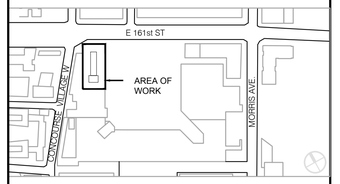

REVISIONS:

NUMBER	DESCRIPTION	DATE
	ISSUE FOR BID	01-27-2026

Department of Design and Construction

DIVISION OF PUBLIC BUILDINGS

CAPITAL PROJECT NUMBER:
PW77198CT

PROJECT
198 E 161ST STREET COOLING TOWER REPLACEMENT
198 E 161ST ST
BRONX, NY 10451

FOR THE:
Department of Citywide Administrative Services (DCAS)

DOB NOW APPLICATION: X01141830-I1

DRAWING TITLE:
SECTIONS & DETAILS

SEAL & SIGNATURE

STATE OF NEW YORK · BENJAMIN M. CORNELIUS · 076812 · LICENSED PROFESSIONAL ENGINEER

DATE:	05 DECEMBER 2025
PROJECT NO:	P1842
DRAWN BY:	LERA
CHECKED BY:	LERA
DRAWING NUMBER:	S-500.00
CADO FILE No:	

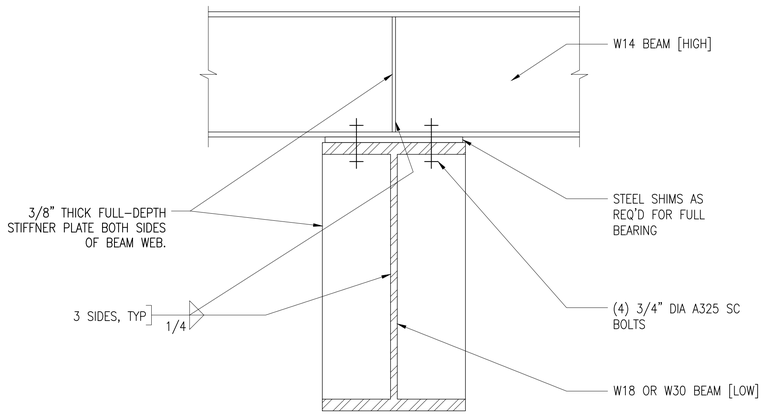

2 FLANGE BOLTED BEAM CONNECTION
SCALE: 1 1/2"=1'-0"

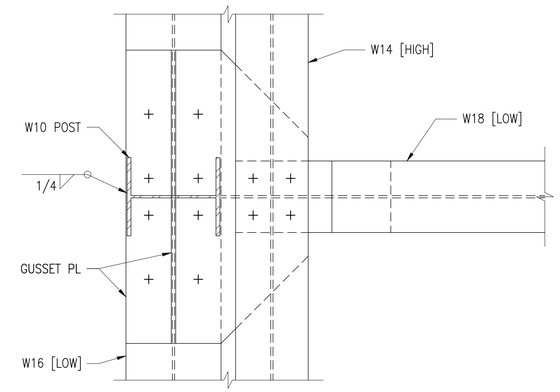

a-a

NOTE: PROPORTION BOLTED & WELDED GUSSETS FOR COMBINATION OF POST AND BRACE FORCES.

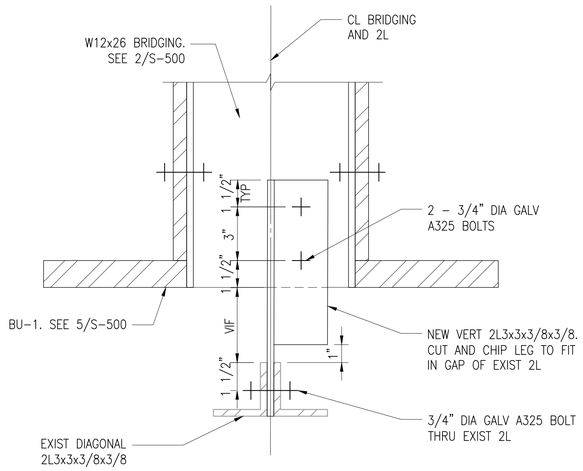

4 BRACE AT EXIST DOUBLE-ANGLE
SCALE: 3"=1'-0"

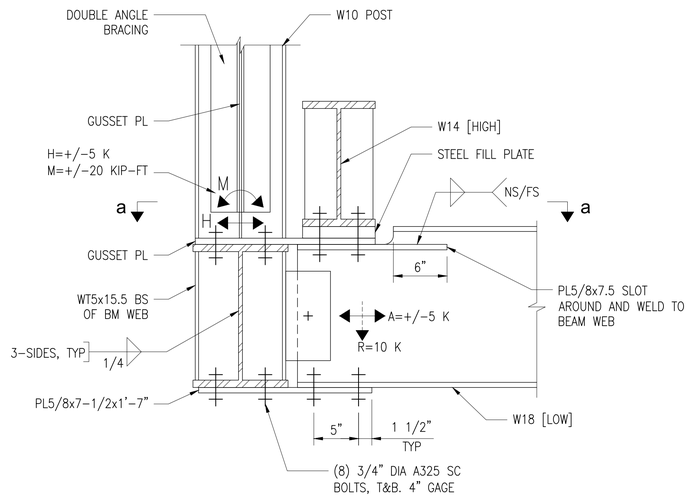

1 POST-TO-BEAM MOMENT CONNECTION
SCALE: 1 1/2"=1'-0"

© Copyright LERA CONSULTING STRUCTURAL ENGINEERS, R.L.L.P.

WARNING: IT IS A VIOLATION OF LAW FOR ANY PERSON, UNLESS ACTING UNDER THE DIRECTION OF A PROFESSIONAL, LICENSED IN THE STATE OF THIS PROJECT, TO ALTER IN ANY WAY THESE DRAWINGS. WHERE ANY ITEM IS ALTERED, THE SUPERVISING PROFESSIONAL SHALL AFFIX TO THE ITEM HIS SEAL AND THE INSCRIPTION "ALTERED BY" FOLLOWED BY HIS SIGNATURE, THE DATE, AND A SPECIFIC DESCRIPTION OF THE ALTERATION.

DOB APPROVAL STAMP

COOLING TOWER REPLACEMENT

BRONX DISTRICT ATTORNEY'S OFFICE
198 E 161ST STREET
NEW YORK, NEW YORK 10451

SPONSOR AGENCY:
DEPARTMENT OF CITYWIDE ADMINISTRATIVE SERVICES
MANHATTAN MUNICIPAL BUILDING
ONE CENTER STREET, 17 FLOOR SOUTH;
NEW YORK, NEW YORK 10007

MANAGING AGENCY:
DEPARTMENT OF DESIGN AND CONSTRUCTION
30-30 THOMSON AVENUE;
LONG ISLAND CITY, NEW YORK 10007

ARCHITECT:
NANDINEE PHOOKAN ARCHITECT
45 MAIN STREET SUITE #620
BROOKLYN NY 11201
P: 718 643 9500

STRUCTURAL ENGINEER:
LERA CONSULTING STRUCTURAL ENGINEERS
40 WALL STREET, FLOOR 23
NEW YORK, NY 10005
P: 212 750 9000

MEP ENGINEER:
DEWBERRY ENGINEERS
132 WEST 31ST STREET, SUITE 301
NEW YORK, NEW YORK 10001
P: 646 434 2822

PLUMBING ENGINEER:
AXON ENGINEERING SERVICES, LLC
222 OUTWATER LN, SUITE 3A
GARFIELD, NJ 07026
p: 917 677 2484

KEY PLAN:

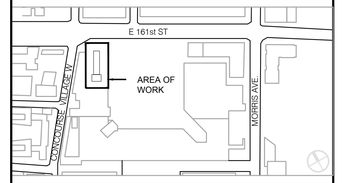

REVISIONS:

NUMBER	DESCRIPTION	DATE
	ISSUE FOR BID	01-27-2026

Department of Design and Construction

DIVISION OF PUBLIC BUILDINGS

CAPITAL PROJECT NUMBER:
PW77198CT

PROJECT
198 E 161ST STREET COOLING TOWER REPLACEMENT
198 E 161ST ST
BRONX, NY 10451

FOR THE:
Department of Citywide Administrative Services (DCAS)

DOB NOW APPLICATION: X01141830-I1

DRAWING TITLE:
SECTIONS & DETAILS

SEAL & SIGNATURE



DATE:	05 DECEMBER 2025
PROJECT NO:	P1842
DRAWN BY:	LERA
CHECKED BY:	LERA
DRAWING NUMBER:	S-501.00
CADO FILE No:	

HVAC ABBREVIATIONS

AC	AIR CONDITIONING UNIT	CS	COLD WATER SUPPLY	FPM	FEET PER MINUTE	M	MOTOR	PRV	PRESSURE REDUCING VALVE
AD	ACCESS DOOR	CT	COOLING TOWER	FSD	FIRE SMOKE DAMPER	MAX	MAXIMUM	RA	RETURN AIR
AFF	ABOVE FINISHED FLOOR	CVB	CONSTANT VOLUME BOX	FT	FEET	MBH	THOUSAND BTU PER HOUR	RHC	REHEAT COIL
AHU	AIR HANDLING UNIT	CWP	CONDENSER WATER PUMP	GC	GENERAL CONTRACTOR	MC	MECHANICAL CONTRACTOR	RM	ROOM
AL	ACOUSTICAL LINING	CWS	CONDENSER WATER SUPPLY	GPH	GALLONS PER HOUR	MIN	MINIMUM	RPM	REVOLUTIONS PER MINUTE
AP	ACCESS PANEL	CWR	CONDENSER WATER RETURN	GPM	GALLONS PER MINUTE	MOD	MOTOR OPERATED DAMPER	SA	SUPPLY AIR
B	BOILER	DB	DRY BULB TEMPERATURE	H	HEIGHT	MTD	MOUNTED	SF	SUPPLY FAN
BHP	BRAKE HORSEPOWER	DP	DIFFERENTIAL PRESSURE	HP	HORSE POWER	MUA	MAKE-UP AIR UNIT	SP	STATIC PRESSURE
BOB	BOTTOM OF BEAM	F.D.	FLOOR DRAIN	HR	HOUR	NC	NOISE CRITERIA	TEMP	TEMPERATURE
BOD	BOTTOM OF DUCT	DIAM, Ø	DIAMETER	HWC	HOT WATER COIL	N.I.C.	NOT IN CONTRACT	TYP.	TYPICAL
BOP	BOTTOM OF PIPE	DN	DOWN	HWP	HOT WATER PUMP	NO.	NUMBER	UON	UNLESS OTHERWISE NOTED
BTU	BRITISH THERMAL UNITS	DWG	DRAWING	HWR	HEATING HOT WATER RETURN	N.T.S.	NOT TO SCALE	V	VOLTS
BTU/HR	BTU PER HOUR	EAT	ENTERING AIR TEMPERATURE	HWS	HEATING HOT WATER SUPLY	OA	OUTSIDE AIR	VAV	VARIABLE AIR VOLUME UNIT
CAP	CAPACITY	ET	EXPANSION TANK	HZ	FREQUENCY (HERTZ)	OAI	OUTSIDE AIR INTAKE	VD	VOLUME DAMPER
CFM	CUBIC FEET PER MINUTE	°F	DEGREES FAHRENHEIT	ID	INSIDE DIAMETER	OAT	OUTSIDE AIR TEMPERATURE	VTR	VENT THRU ROOF
CH	CHILLER	FA	FREE AREA	IN	IN OR INCHES	OC	ON CENTER	W	WIDTH
℄	CENTERLINE	FC	FLEXIBLE CONNECTION	L	LENGTH	OD	OUTSIDE DIAMETER	WB	WET BULB TEMPERATURE
CLG	CEILING	FCU	FAN COIL UNIT	LAT	LEAVING AIR TEMPERATURE	P	PUMP	WG	WATER GAUGE
CO	CLEAN OUT	FLA	FULL LOAD AMPERES	LBS	POUNDS	PBD	PRESSURE DROP	WMS	WIRE MESH SCREEN
CP	CONDENSATE PUMP	FP	FIRE PUMP	LWT	LEAVING WATER TEMPERATURE	PD	PRESSURE DROP		

NOTE: THE KEY OF SYMBOLS AND ABBREVIATIONS INDICATED IS FOR CONVENIENCE ONLY AND ITEMS INDICATED ARE NOT NECESSARILY WITHIN THE SCOPE OF THE WORK.

2020 NYC ENERGY CODE PROGRESS INSPECTIONS

THE FOLLOWING ITEMS ARE DESIGNATED FOR NYC ENERGY CODE PROGRESS INSPECTIONS IN ACCORDANCE WITH 2020 NYC ENERGY CONSRVATION CODE, 2022 NEW YORK CITY MECHANICAL CODE, AS REGULATED UNDER 1RCNY§5000-01

REQUIRED INSPECTIONS AND TESTS OF MATERIALS DESIGNATED FOR "ENERGY CODE PROGRESS INSPECTIONS" BY THE CONTRACTOR SHALL BE MADE UNDER THE DIRECT SUPERVISION OF A LICENSED ARCHITECT OR ENGINEER RETAINED BY OR ON THE BEHALF OF THE OWNER WHO SHALL BE ACCEPTABLE TO THE ARCHITECT OR ENGINEER WHO SUPERVISED THE PREPARATION OF THE PLANS. CONTRACTOR SHALL VERIFY WITH OWNER THE EXTENT OF THE INSPECTIONS TO BE PROVIDED BY THE LICENSED ARCHITECT OR ENGINEER.

THE CONTRACTOR MUST NOTIFY THE ARCHITECT OR ENGINEER FOR SPECIAL INSPECTIONS AT LEAST 72 HOURS BEFORE THE SPECIFIC WORK COMMENCES FOR THOSE REQUIRED TO BE PERFORMED BY ARCHITECT OR ENGINEER OF RECORD.

SPECIAL INSPECTIONS SHALL BE PERFORMED BY AGENCIES REGISTERED, CERTIFIED, AND/OR ACCREDITED BY NYC.

SEE ARCHITECTURAL DRAWINGS FOR ADDITIONAL CONTROL INSPECTION ITEMS.

NYECC COMPLIANCE STATEMENT "TO THE BEST OF MY KNOWLEDGE, BELIEF AND PROFESSIONAL JUDGEMENT, THIS APPLICATION IS IN COMPLIANCE WITH THE NEW YORK CITY ENERGY CONSERVATION CONSTRUCTION CODE."

SPECIAL INSPECTIONS REQUIRED IN ACCORDANCE WITH THE APPLICABLE SECTIONS OF THE NYC BUILDING CODE ARE LISTED IN THE FOLLOWING TABLE: NYC MECHANICAL SPECIAL INSPECTION ITEMS

PROGRESS INSPECTION(S) - COMMERCIAL BUILDINGS	TABLE REFERENCE 1RCNY §5000-01(h) (2)	REQUIRED INSPECTION
HVAC AND SERVICE WATER HEATING EQUIPMENT	(IIB3)	●
HVAC AND SERVICE WATER HEATING CONTROLS	(IIB4)	●
MAINTENANCE INFORMATION	(IID1)	●

NYC MECHANICAL SPECIAL INSPECTIONS ITEMS

THE FOLLOWING ITEMS ARE DESIGNATED FOR SPECIAL MECHANICAL INSPECTIONS IN ACCORDANCE WITH 2022 NYC BUILDING CODE SECTION 1704, 1705 AND THE 2022 NEW YORK CITY MECHANICAL CODE AS REGULATED UNDER 1 RCNY§101-06, AND 1 RCNY§5000-01

SPECIAL INSPECTIONS	CODE REFERENCE	REQUIRED INSPECTION
MECHANICAL SYSTEMS	BC 1705.21	●
FINAL	BC 110.5, DIRECTIVE 14-1975	●

MECHANICAL DRAWING LIST

M-001.00	MECHANICAL SYMBOLS, ABBREVIATIONS, AND DRAWING LIST
M-002.00	MECHANICAL GENERAL NOTES
M-003.00	MECHANICAL SCHEDULE
M-100.00	MECHANICAL COOLING TOWER DEMOLITION PLAN
M-101.00	MECHANICAL COOLING TOWER CONSTRUCTION PLAN
M-102.00	MECHANICAL COOLING TOWER SECTIONS
M-401.00	MECHANICAL RISER DIAGRAM
M-501.00	MECHANICAL DETAILS
M-601.00	MECHANICAL CONTROL DIAGRAMS,SEQUENCE OF OPERATION, AND BUILDING MANAGEMENT SYSTEMS (BMS) RISER DIAGRAM

PIPING SYMBOLS

	GATE VALVE
	GLOBE VALVE
	CHECK VALVE
	BALANCING VALVE
	BUTTERFLY VALVE
	BALL VALVE
	PIPE UP
	PIPE DOWN
	PIPE STUB UP
	FLOW DIRECTION
DN UP	PITCH PIPE
	FLANGED END
	EXISTING EQUIPMENT OR PIPING TO BE REMOVED
	EXISTING TO REMAIN
	STRAINER
	STRAINER WITH BLOW-OFF VALVE
	UNION - SCREWED OR FLANGED
A	ANCHOR
G	GUIDE
EJ	EXPANSION JOINT
	STEAM TRAP
	GATE VALVE, ANGLE
	GLOBE VALVE, ANGLE
	THREE WAY CONTROL VALVE
	TWO WAY CONTROL VALVE
S	SOLENOID VALVE
PRV	PRESSURE REDUCING VALVE (PRV)
TPV	TEMPERATURE/PRESSURE RELIEF VALVE
	RELIEF/SAFETY VALVE
	CONCENTRIC REDUCER
	THERMOMETER
	GAUGE WITH GAUGE COCK & SYPHON (STEAM)
VB	VACUUM BREAKER
H W	EXPANSION LOOP (WxH)
	BALL VALVE - ALL VALVE ≤ 4"
	BUTTERFLY VALVE - ALL VALVE > 5"

HVAC CONTROL SYMBOLS

	CENTRIFUGAL FAN
FS	FLOW SWITCH
T	ROOM OR ZONE THERMOSTAT
T	DUCT THERMOSTAT
MOD	DAMPER MOTOR
M	MOTOR
P	PRESSURE SWITCH
	PUMP
	CONTROL WIRING
CO	CARBON DIOXIDE SENSOR
H	HUMIDITY SENSOR
SD	SMOKE DETECTOR
DP	DIFFERENTIAL PRESSURE SWITCH

HVAC REFERENCE SYMBOLS

X / X	INDICATES SECTION NUMBER / INDICATES ON WHICH DRAWING SECTION APPEARS
X	INDICATES REVISION & NUMBER
	CONNECT NEW TO EXISTING
	POINT OF DISCONNECTION
	TERMINATION POINT OF DEMOLITION
#	SHEET NOTE NUMBER
D#	DEMOLITION NOTE NUMBER

COOLING TOWER REPLACEMENT

BRONX DISTRICT ATTORNEY'S OFFICE
198 E 161ST STREET
NEW YORK, NEW YORK 10451

SPONSOR AGENCY:
DEPARTMENT OF CITYWIDE ADMINISTRATIVE SERVICES
MANHATTAN MUNICIPAL BUILDING
ONE CENTER STREET, 17 FLOOR SOUTH;
NEW YORK, NEW YORK 10007

MANAGING AGENCY:
DEPARTMENT OF DESIGN AND CONSTRUCTION
30-30 THOMSON AVENUE;
LONG ISLAND CITY, NEW YORK 10007

ARCHITECT:
NANDINEE PHOOKAN ARCHITECT
45 MAIN STREET SUITE #620
BROOKLYN NY 11201
P: 718 643 9500

STRUCTURAL ENGINEER:
LERA CONSULTING STRUCTURAL ENGINEERS
40 WALL STREET, FLOOR 23
NEW YORK, NY 10005
P: 212 750 9000

MEP ENGINEER:
DEWBERRY ENGINEERS
132 WEST 31ST STREET, SUITE 301
NEW YORK, NEW YORK 10001
P: 646 434 2822

PLUMBING ENGINEER:
AXON ENGINEERING SERVICES, LLC
222 OUTWATER LN, SUITE 3A
GARFIELD, NJ 07026
p: 917 677 2484

KEY PLAN:

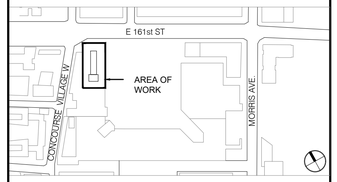

REVISIONS:

NUMBER	DESCRIPTION	DATE
	ISSUED FOR BID	01-27-2026

Department of Design and Construction

DIVISION OF PUBLIC BUILDINGS

CAPITAL PROJECT NUMBER:
PW77198CT

PROJECT
198 E 161ST STREET COOLING TOWER REPLACEMENT
198 E 161ST ST
BRONX, NY 10451

FOR THE:
Department of Citywide Administrative Services (DCAS)

DOB NOW APPLICATION: X01141830-I1

DRAWING TITLE:
MECHANICAL SYMBOLS, ABBREVIATIONS, AND DRAWING LIST

DOB APPROVAL STAMP

SEAL & SIGNATURE



DATE:	02 May, 2025
PROJECT NO:	22_01
DRAWN BY:	AF
CHECKED BY:	AA
DRAWING NUMBER:	M-001.00
CADO FILE No:	01 OF 08

HVAC GENERAL NOTES

1. THE SCOPE OF WORK SHALL INCLUDE PROVIDING HEATING, VENTILATING AND AIR CONDITIONING FOR THE PREMISES IN ACCORDANCE WITH THESE DRAWINGS AND SPECIFICATIONS. DRAWINGS AND SPECIFICATIONS INDICATE GENERAL ARRANGEMENT OF SYSTEMS AND WORK INCLUDED IN THIS CONTRACT, WORK SHALL CONSIST OF FURNISHING ALL ASPECTS NECESSARY FOR AND INCIDENTAL TO THE EXECUTION AND COMPLETION OF FULLY FUNCTIONAL HVAC SYSTEMS INDICATED ON THE DRAWINGS AND SPECIFIED HEREIN.

2. IN ORDER TO DEFINE REQUIREMENTS FOR CAPACITY, QUALITY, FUNCTION, SIZE, GAUGES AND GRADES, THESE MATERIAL SPECIFICATIONS DESIGNATE MANUFACTURERS, BRANDS, AND OTHER PERTINENT DATA DESCRIBING PRODUCTS THAT CONFORM TO THIS PROJECT'S REQUIREMENTS, MATERIALS OR PRODUCTS SPECIFIED BY NAME OF MANUFACTURER, BRAND OR TRADE NAME OR CATALOG REFERENCE SHALL BE THE BASIS OF THE BID AND FURNISHED UNDER THIS CONTRACT. SHOULD THE CONTRACTOR WISH TO PROVIDE AN ALTERNATE PIECE OF EQUIPMENT THE CONTRACTOR SHALL BEAR ALL BURDEN OF RESPONSIBILITY GUARANTEEING SUBSTITUTE UNIT IS EQUAL IN ALL ASPECTS OF PERFORMANCE, DIMENSIONS ETC. WHERE TWO OR MORE MATERIALS OR PRODUCTS ARE NAMED, THE CHOICE OF THESE SHALL BE OPTIONAL WITH THE BIDDER, THE BIDDER SHALL SUBMIT HIS BID BASED ON THE MATERIAL AND PRODUCTS LISTED IN THIS SPECIFICATION.

3. THE CONTRACTOR IS TO HAVE THOROUGHLY EXAMINED ALL EXISTING CONDITIONS INCLUDING ENTRANCE AND EXIT FACILITIES, HOURS PERMITTED BY THE BUILDING FOR THE TRANSPORTATION OF EQUIPMENT AND MATERIALS, AS WELL AS THE CONTRACTOR SATISFIED THEMSELF AS TO THE CONDITIONS AND WORK SHOWN ON THE PLANS OF THE ARCHITECT WHICH WOULD IN ANY MANNER AFFECT THE WORK UNDER HIS CONTRACT AND ITS COMPLETION DATE. NO LATER CLAIM FOR EXTRA COMPENSATION FOR WORK WHICH COULD HAVE BEEN FORESEEN BY SUCH VISIT OR INVESTIGATION SHALL BE RECOGNIZED. SUBMISSION OF A BID SHALL BE CONSTRUED AS EVIDENCE THAT SUCH A VISIT HAD OCCURRED. THE CONTRACTOR SHALL EXAMINE ALL EXISTING STRUCTURAL CONDITIONS, TAKE ALL NECESSARY MEASUREMENTS FOR HIS WORK AT THE SITE AND SHALL VERIFY ALL DIMENSIONS GIVEN ON THE DRAWINGS OF THE WORK AND THE REFERENCE DRAWINGS.

4. THE CONTRACTOR SHALL OBTAIN AND PAY FOR ALL PERMITS NECESSARY FOR THE INSTALLATION OF THE WORK AND FOR ALL CERTIFICATES OF INSPECTION AND APPROVAL REQUIRED BY THE AUTHORITIES HAVING JURISDICTION. NO WORK IS TO PROCEED WITHOUT BUILDING DEPARTMENT PERMIT.

5. THE CONTRACTOR SHALL GUARANTEE ALL WORK PERFORMED AND MATERIALS INSTALLED BY THE CONTRACTOR TO BE FREE FROM INHERENT DEFECTS, AND SHALL REPAIR OR REPLACE ANY DEFECTIVE MATERIALS OR WORKMANSHIP, FREE OF COST TO OWNER, FOR A PERIOD OF ONE (1) YEAR FROM THE DATE OF ACCEPTANCE BY THE OWNER. ANY DAMAGE OR LOSS, EXCLUSIVE OF BUILDING CONTENTS DUE TO SUCH DEFECTS WILL ALSO BE MADE GOOD AT CONTRACTOR'S EXPENSE. DEFECTS WILL BE REMEDIED AND DAMAGES OR LOSSES WILL BE MADE GOOD WITHIN A REASONABLE TIME, AS SPECIFIED IN NOTICE BY THE OWNER.

6. THE CONTRACTOR SHALL REFER TO THE ADDENDUM TO GENERAL CONDITIONS FOR ALL INSURANCE REQUIREMENTS.

7. ANY LOSS OF, OR DAMAGE TO ANY EQUIPMENT, OR MATERIALS SUPPLIED BY THE CONTRACTOR, OR BY OWNER FOR INSTALLATION SHALL BE THE SOLE RESPONSIBILITY OF THIS CONTRACTOR, UNTIL SUCH TIME AS COMPLETED JOB HAS BEEN APPROVED AND ACCEPTED BY THE OWNER. IF LOSS, OR DAMAGE SHOULD OCCUR NO CLAIM MAY BE MADE AGAINST THE OWNER, NOR SHALL COMPLETION DATES BE AFFECTED BY SUCH LOSS, OR DAMAGE.

8. CONTRACTOR SHALL PREPARE DETAILED SHOP DRAWINGS OF THE EQUIPMENT, PIPING, TEMPERATURE CONTROLS AND PROVIDE CUTS OF COMPONENTS TO BE FURNISHED BY THE CONTRACTOR. ALL ITEMS SHALL BE SUBMITTED THE ENGINEER FOR HIS APPROVAL. NO WORK SHALL PROCEED WITHOUT APPROVED SHOP DRAWINGS.

9. ALL AIR AND WATER SYSTEMS SHALL BE BALANCED AND CERTIFIED READINGS SHALL BE SUBMITTED FOR APPROVAL. THE CONTRACTOR SHALL ALLOW FOR A SECOND VISIT TO REBALANCE THE SYSTEM TO PROVIDE AIR QUANTITIES INDICATED ON DRAWINGS AND TO ADJUST AIR THROW ONCE SPACE IS OCCUPIED. THE WORK WILL NOT BE CONSIDERED COMPLETE WITHOUT APPROVED BALANCING REPORT. HOT AND CHILLED WATER SYSTEM SHALL BE BALANCED TO FLOW RATES INDICATED.

10. TEMPORARY WORK TO KEEP NORMAL BUILDING SERVICES IN OPERATION SHALL BE PART OF THIS CONTRACT. COORDINATE WITH BUILDING MANAGEMENT AND OBTAIN PERMISSION FOR ANY ALTERATIONS AFFECTING BUILDING. COORDINATE ALL BUILDING SHUTDOWNS AND RELOCATIONS OF EXISTING SYSTEMS WITH OWNER. DO NOT PROCEED WITH WORK AFFECTING BUILDING SYSTEMS AND OPERATION WITHOUT WRITTEN APPROVAL.

11. CONTRACTOR SHALL FURNISH "AS BUILT" RECORD DRAWINGS AND OPERATING AND MAINTENANCE INSTRUCTIONS AT THE COMPLETION OF THE INSTALLATION.

    DRAWINGS SHALL SHOW:

    A. ALL NEW ELECTRICAL AND MECHANICAL WORK INSTALLED

    B. MODIFICATIONS AND ADDITIONS TO ORIGINAL DESIGN

    C. DIMENSIONAL INFORMATION NECESSARY TO LOCATE BURIED OR UNDERGROUND PIPING/UTILITIES

13. CONTRACTOR TO PROVIDE THE FOLLOWING: CUTTING, ROUGH PATCHING, FIRE AND OR SOUND SAFING OF ALL PENETRATIONS AS REQUIRED.

14. ALL EXTERIOR OPENINGS TO BE PROPERLY CAULKED AND SEALED WITH A SEALANT OF HIGH QUALITY AND LONG LIFE, TO PREVENT INFILTRATION OF OUTSIDE AIR INTO CONDITIONED SPACE.

15. COORDINATE INSTALLATION OF ALL ROOF FLASHING AT ROOF PENETRATION.

16. DO NOT SCALE THIS DRAWING FOR EXACT DIMENSIONS. VERIFY ALL FIGURES, CONDITIONS, AND DIMENSIONS AT THE JOB SITE.

17. THE MECHANICAL PLANS ARE INTENDED TO BE DIAGRAMMATIC AND ARE BASED ON ONE MANUFACTURES EQUIPMENT. THEY ARE NOT INTENDED TO SHOW EVERY ITEM IN ITS EXACT LOCATION, THE EXACT DIMENSIONS, OR ALL THE DETAILS OF THE EQUIPMENT OR DEVICES. THE CONTRACTOR SHALL VERIFY THE ACTUAL DIMENSIONS OF THE EQUIPMENT PROPOSED TO ENSURE THAT THE EQUIPMENT WILL FIT IN THE AVAILABLE SPACE.

18. SUPPORTS FOR DUCT, FANS, VAV'S, PIPING ETC. SHALL BE DIRECTLY FROM BUILDING STRUCTURE, SUSPENDING ANY OF THE ABOVE FROM ONE ANOTHER IS PROHIBITED.

19. FIELD OBSERVATION OF EXISTING SYSTEM AND CONDITIONS WAS ATTAINED VIA LIMITED FIELD SURVEYS. ONLY SYSTEMS AND CONDITIONS CLEARLY VISIBLE AT THE TIME OF SURVEY ARE SHOWN. CONTRACTOR SHALL VERIFY EXACT LOCATION OF CONNECTION OF NEW WORK TO EXISTING.

20. CONTRACTOR TO PROVIDE PRIME AND FINISH PAINTING AS REQUIRED.

21. CONTRACTOR TO PROVIDE STENCILING OF PIPING WITH SIZE, PURPOSE AND DIRECTION OF FLOW. APPLY ASME A13.1 COMPLYING MARKERS TO ALL PIPING WITH NAME OR SERVICE, SPACE EVERY 20 FEET. COLORING OF ARROWS SHALL BE IN ACCORDANCE WITH AMERICAN STANDARD ASSOCIATION (A.S.A.) REQUIREMENTS.

22. FURNISH AND INSTALL ON EACH VALVE A 2 INCH DIAMETER NUMBERED TAG, FURNISH AND INSTALL TWO FRAME, GLASS COVERED VALVE CHARTS, LISTING EACH VALVE BY SYSTEM, FUNCTION AND NUMBER, AS WELL AS ONE LINE FLOW SCHEMATIC.

23. PROVIDE SCREWED ON ENGRAVED BLACK LAMICOLD SHEET NAMEPLATES FOR EQUIPMENT, INSTRUMENTS, GAUGES, CONTROL SWITCHES ETC.

24. CONDUCT SUCH TESTS AND ADJUSTMENT OF EQUIPMENT AS SPECIFIED, AS NECESSARY TO VERIFY PERFORMANCE REQUIREMENTS AND AS REQUIRED BY AUTHORITIES HAVING JURISDICTION.

25. THE "GENERAL CONDITIONS OF THE CONTRACT FOR CONSTRUCTION" AIA DOCUMENT A201 - MOST CURRENT EDITION AND THE ARCHITECT'S SPECIFICATIONS, AS APPLICABLE, ARE PART OF THIS CONTRACT.

26. WHEN CONFLICTS OCCUR IN THE SPECIFICATIONS OR ON THE DRAWINGS OR BETWEEN EITHER, PROVIDE THE ITEM OF GREATER QUANTITY OR HIGHER COST, UNLESS WRITTEN INSTRUCTIONS FROM THE OWNER OR ENGINEER ARE PROVIDED TO RESOLVE THE SPECIFIC CONFLICT.

TESTING AND BALANCING OF CONDENSER WATER SYSTEM

1. CONTRACTOR TO DO PRELIMINARY TESTING OF THE EXISTING CONDENSER WATER PUMPS, BEFORE THE START OF CONSTRUCTION AND DOCUMENT THE EXISTING FLOW RATES AND PERFORMANCE DATA.

2. TOWARD THE END OF CONSTRUCTION OF THE NEWLY INSTALLED VFD'S ON THE EXISTING HOT WATER PUMPS, CONTRACTOR TO MATCH FLOW RATES AS DOCUMENTED DURING THE PRELIMINARY TESTING AND BALANCE OF THE CONDENSER WATER SYSTEM ACCORDINGLY.

3. CONTRACTOR TO DO PRELIMINARY TESTING OF THE EXISTING AC UNITS FROM THE FIRST FLOOR UP TO THE TENTH FLOOR, BEFORE THE START OF CONSTRUCTION AND DOCUMENT THE EXISTING CONDENSER WATER FLOW RATES AND PERFORMANCE DATA.

4. TOWARD THE END OF CONSTRUCTION OF THE NEWLY INSTALLED COOLING TOWERS, CONTRACTOR TO MATCH FLOW RATES OF THE EXISTING AC UNITS FROM THE FIRST FLOOR UP TO THE TENTH FLOOR, AS DOCUMENTED DURING THE PRELIMINARY TESTING AND BALANCE THE OVERALL SYSTEM ACCORDINGLY TO MATCH PRELIMINARY PERFORMANCE REQUIREMENTS.

GENERAL MECHANICAL DEMOLITION NOTES

1. THE DEMOLITION DRAWINGS SHALL BE CONSIDERED ONLY AS A GUIDE AND ARE NOT INTENDED TO SHOW EVERY SINGLE ITEM OF WORK REQUIRED. ACTUAL FIELD CONDITIONS WILL DETERMINE THE PRECISE WORK TO BE DONE. SHOULD ANY QUESTION ARISE AS TO WHETHER OR NOT ANY PIPING, EQUIPMENT OR OTHER ITEM SHOULD BE REMOVED, OR REMAIN AS PRESENTLY INSTALLED, THE CONTRACTOR SHALL REQUEST, IN WRITING, CLARIFICATION FROM THE ENGINEER. SINCE THE MECHANICAL DRAWINGS INDICATE THE EXTENT OF THE SCOPE OF WORK, NO EXTRA CHARGES WILL BE ALLOWED FOR ANY REMOVALS NECESSARY FOR COMPLETION OF THE WORK UNDER THIS PROJECT.

2. CONTRACTOR SHALL DEMOLISH ALL PIPING, EQUIPMENT AND APPURTENANCES APPEARING SHOWN AS EXISTING TO BE REMOVED.

3. CONTRACTOR SHALL CAP ALL REMAINING PIPING AT ALL POINTS OF DISCONNECTION.

4. CONTRACTOR IS RESPONSIBLE FOR THE REMOVAL AND DISPOSAL OF ALL CONSTRUCTION DEBRIS.

5. CONTRACTOR SHALL BE RESPONSIBLE FOR HIS WORK, WITH ITS COMPLETION AND FINAL ACCEPTANCE, AND SHALL REPLACE ANY OF THE SAME WHICH MAY BE DAMAGED, LOST OR STOLEN WITHOUT ADDITIONAL COST TO THE OWNER.

6. BEFORE PROCEEDING WITH ANY WORK IN OCCUPIED AREAS, THE CONTRACTOR SHALL APPLY TO THE OWNER FOR PERMISSION TO ENTER SUCH AREAS. THE CONTRACTOR IS OBLIGED TO PERFORM HIS WORK ONLY AT THE TIME OR TIMES DESIGNATED BY THE OWNER. THERE WILL BE NO ADDITIONAL COMPENSATION FOR THE WORK PERFORMED AFTER HOURS OR ON OFF-DAYS WITHOUT PRIOR WRITTEN APPROVAL.

7. DEMOLITION AND OTHER WORK WHICH CREATES DIRT AND/OR DISTURBING NOISE, MUST BE COORDINATED WITH THE COMMISSIONER IN ADVANCE AND, IF INSTRUCTED BY THE COMMISSIONER, BE PERFORMED AFTER HOURS. THE DELIVERY, HANDLING AND INSTALLING OF MATERIALS, EQUIPMENT AND DEBRIS REMOVALS MUST BE ARRANGED TO AVOID ANY INCONVENIENCE AND ANNOYANCE. DELIVERY AND RIGGING WHICH REQUIRES ROAD CLOSURES OR PREVENTS THE OCCUPATION OF PORTIONS OF THE BUILDING WILL BE SCHEDULED FOR WEEKEND WORK. CLEANING MUST BE CONTROLLED TO PREVENT DIRT AND DUST FROM INFILTRATING INTO ADJACENT AREAS. WELDING OR BURNING MUST BE PERFORMED ONLY DURING TIMES SPECIFICALLY APPROVED BY THE BUILDING MANAGER.

8. ALL ITEMS CALLED FOR REMOVAL (EQUIPMENT, EQUIPMENT COMPONENTS, PIPING, SUPPORTS, ETC) SHALL BE IMMEDIATELY REMOVED FROM THE SITE BY THE CONTRACTOR.

9. CONTRACTOR SHALL PATCH AND SEAL ALL PIPING PENETRATIONS, CAP PIPING AT ALL POINTS OF DISCONNECTION AND REMOVE REMAINDER OF UNUSED PIPING, UNLESS OTHERWISE NOTED.

10. RE-INSULATE ALL EXISTING TO REMAIN PIPING IN WHICH INSULATION HAS BEEN REMOVED OR DAMAGED WITH INSULATION EQUAL TO THE EXISTING INSULATION.

11. WHERE PIPING SHALL BE REMOVED, CONTRACTOR SHALL REMOVE ASSOCIATED SUPPORTS, HANGERS AND APPURTENANCES AS WELL.

12. ASBESTOS ABATEMENT SHALL BE DONE BY OTHERS.

CODE COMPLIANCE & STANDARDS

ENTIRE INSTALLATION SHALL BE COMPLETE, READY FOR OPERATION IN ACCORDANCE WITH THE LOCAL CODES AND ALL OTHER RULES AND REGULATIONS PERTAINING TO THIS WORK, INCLUDING BUILDING CRITERIA. THIS WORK SHALL CONFORM TO THE FOLLOWING STANDARDS:

A. NEW YORK CITY MECHANICAL CODE (2022)*
B. NEW YORK CITY FUEL GAS CODE (2022)*
C. NEW YORK CITY ENERGY CONSERVATION CODE (2020)*
D. NEW YORK CITY BUILDING CODE (2022)*
E. UNDERWRITER'S LABORATORIES, INC. U.L.
F. NATIONAL FIRE CODES NFPA
G. OCCUPATIONAL SAFETY AND HEALTH ACT (OSHA)
H. NATIONAL ELECTRICAL CODE (NEC)
I. ANSI/ASME
I. AMERICAN SOCIETY OF HEATING REFRIGERATING AND AIR CONDITIONING ENGINEERS (ASHRAE)

*ALL CODES INCLUDING ADDENDA

NEW YORK CITY BUILDING CODE NOTES

1. ALL MATERIAL DESIGNATED BY THE BUILDING CODE FOR SPECIAL INSPECTIONS SHALL BE INSPECTED AND/OR TESTED TO VERIFY COMPLIANCE WITH CODE REQUIREMENTS. SUCH INSPECTION AND/OR TESTING SHALL BE PERFORMED BY, OR UNDER THE SUPERVISION OF, A LICENSED ARCHITECT OR ENGINEER EMPLOYED BY THE OWNER. SIGNED COPIES OF SUCH INSPECTION AND/OR TEST REPORT SHALL BE FILED WITH THE BUILDING DEPARTMENT SHOWING COMPLIANCE WITH ALL REQUIREMENTS OF THE BUILDING CODE AS PER SECTION BC109.1 OF THE BUILDING CODE.

2. ALL REQUIRED VENTILATING AND REFRIGERATION SYSTEMS SHALL BE SUBJECT TO THE REQUIREMENTS FOR SPECIAL INSPECTIONS AS PER MC107 OF THE BUILDING CODE.

3. AN INSPECTION SHALL BE MADE OF THE COMPLETED SYSTEM TO VERIFY THAT THE INSTALLATION COMPLIES WITH THE REQUIREMENTS OF MC107. TEST SHALL BE CONDUCTED TO ASCERTAIN THAT THE AMOUNT OF AIR BEING SUPPLIED TO AND EXHAUSTED FROM EACH SPACE CONFORMS WITH REQUIREMENTS OF THE BUILDING CODE, AND THAT ALL REQUIRED SMOKE DETECTION AND FIRE PROTECTION DEVICES ARE FUNCTIONING PROPERLY.

4. A SIGNED STATEMENT SHALL BE OBTAINED FROM THE FIRE COMMISSIONER CERTIFYING ACCEPTANCE OF THE FIRE EXTINGUISHING SYSTEMS.

5. A STATEMENT SHALL BE FILED WITH THE COMMISSIONER BY THE OWNER THAT THE REQUIRED VENTILATING SYSTEMS WILL BE KEPT IN CONTINUOUS OPERATION AT ALL TIMES DURING THE OCCUPANCY OF THE BUILDING.

6. THESE PLANS AGREE AS TO THE ARRANGEMENT OF ROOMS AND WINDOWS WITH THE LAYOUT OF THE ARCHITECTURAL PLANS FILED HEREWITH.

7. DURING HEATING AND COOLING SEASONS OUTSIDE AIR QUANTITIES SHALL BE AS REQUIRED BY CHAPTER 4 SECTION MC403 OF THE BUILDING CODE.

SCOPE OF WORK

WORK UNDER THIS SECTION INCLUDES THE FURNISHING OF ALL LABOR, MATERIAL AND EQUIPMENT NECESSARY FOR THE COMPLETE EXECUTION OF ALL HEATING, VENTILATION AND AIR CONDITIONING AS SHOWN ON THE DRAWINGS AND AS HEREIN SPECIFIED. INSTALLATION SHALL BE IN CONFORMITY WITH APPLICABLE CODES AND AUTHORITIES HAVING JURISDICTION: INCLUDING THE FOLLOWING:

A. PIPING
B. AUTOMATIC TEMPERATURE CONTROLS
C. INSULATION
D. MOTORS AND CONTROLLER
E. VIBRATION ISOLATION
F. STEEL SUPPORTS AND HANGERS
G. TESTING ADJUSTING AND BALANCING
H. COORDINATION WITH OTHER TRADES
I. COOLING TOWERS
J. CONDENSER WATER PUMP
K. GLYCOL MAKEUP SYSTEM
L. CONDENSER WATER
M. 40% PROPELYNE GLYCOL SOLUTION FOR CONDENSER WATER SYSTEM
N. PRELIMINARY (PRECONTRUCTION/INSTALLATION) AND FINAL BALANCING AND TESTING OF CONDENSER WATER SYSTEM

* REFER TO PHASING PLANS (G-100.00 AND G-101.00) FOR ADDITIONAL SEQUENCING INFORMATION.

DOB APPROVAL STAMP

COOLING TOWER REPLACEMENT

BRONX DISTRICT ATTORNEY'S OFFICE
198 E 161ST STREET
NEW YORK, NEW YORK 10451

SPONSOR AGENCY:
DEPARTMENT OF CITYWIDE ADMINISTRATIVE SERVICES
MANHATTAN MUNICIPAL BUILDING
ONE CENTER STREET, 17 FLOOR SOUTH;
NEW YORK, NEW YORK 10007

MANAGING AGENCY:
DEPARTMENT OF DESIGN AND CONSTRUCTION
30-30 THOMSON AVENUE;
LONG ISLAND CITY, NEW YORK 10007

ARCHITECT:
NANDINEE PHOOKAN ARCHITECT
45 MAIN STREET SUITE #620
BROOKLYN NY 11201
P: 718 643 9500

STRUCTURAL ENGINEER:
LERA CONSULTING STRUCTURAL ENGINEERS
40 WALL STREET, FLOOR 23
NEW YORK, NY 10005
P: 212 750 9000

MEP ENGINEER:
DEWBERRY ENGINEERS
132 WEST 31ST STREET, SUITE 301
NEW YORK, NEW YORK 10001
P: 646 434 2822

PLUMBING ENGINEER:
AXON ENGINEERING SERVICES, LLC
222 OUTWATER LN, SUITE 3A
GARFIELD, NJ 07026
p: 917 677 2484

KEY PLAN:

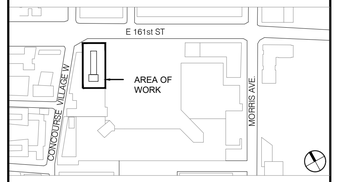

REVISIONS:

NUMBER	DESCRIPTION	DATE
	ISSUED FOR BID	12-5-2025
	ADDENDUM #2	04-29-2026
	ADDENDUM #4	05-19-2026

NYC DDC **Department of Design and Construction**

DIVISION OF PUBLIC BUILDINGS

CAPITAL PROJECT NUMBER:
PW77198CT

PROJECT
198 E 161ST STREET COOLING TOWER REPLACEMENT
198 E 161ST ST
BRONX, NY 10451

FOR THE:
Department of Citywide Administrative Services (DCAS)

DOB NOW APPLICATION: X01141830-I1

DRAWING TITLE:
MECHANICAL GENERAL NOTES

SEAL & SIGNATURE



DATE:	02 May, 2025
PROJECT NO:	22_01
DRAWN BY:	AF
CHECKED BY:	AA
DRAWING NUMBER:	M-002.00
CADO FILE No:	

CLOSED CIRCUIT COOLER SCHEDULE

EVAPCO INC. as Standard

Equipment No.	Model No.	Location	Fan Type	Fan Data					CFM	GPM	Capacity (MBH)	ASHRAE 90.1 Perf. GPM/HP	Water Temperature (°F)			Basin Heater Data					Spray Pump Data					Noise Data (Sound Press. Level in dB(A) @ 5 ft					Dimensions (ft'-in")			Weight (lb)		
				No. of Fans	Motor (HP)	Volt/Ph/Hz	FLA	MOCP					Inlet	Outlet	Ambient WB	No. of Heaters	Capacity (KW)	Volt/Ph/Hz	MCA	MOCP	No. of Pumps	Motor (HP)	Volt/Ph/Hz	MCA	MOCP	End	Motor Side	Opp. End	Opp. Mtr. Side	Top	W	D	H	Operating	Shipping	Heaviest Section
CT-1	PHW 12-5Q24P	ROOF	PROPELLER	1	75	460/3/60	84.1	105.1	235,600	1,450	6,695	19.3	97	87	78	4	8	460/3/60	16.6	20.8	2	7.5	460/3/60	9.2	11.5	84	77	84	77	90	11-11	24-0	17-2 3/8	52,450	32,130	22,040
CT-2	PHW 12-5Q24P	ROOF	PROPELLER	1	75	460/3/60	84.1	105.1	235,600	1,450	6,695	19.3	97	87	78	4	8	460/3/60	16.6	20.8	2	7.5	460/3/60	9.2	11.5	84	77	84	77	90	11-11	24-0	17-2 3/8	52,450	32,130	22,040

Comments:

A. FLUID COOLERS SHALL BE BUILT WITH ALL NON-COMBUSTIBLE MATERIALS, EXCEPT LIMITED COMBUSTIBLE MATERIALS MAY BE USED FOR FILL AND DRIFT ELIMINATORS AS ALLOWED BY THE NYC MECHANICAL CODE.

B. FLUID COOLERS SHALL BE EQUIPPED WITH THE FOLLOWING ITEMS:

1. AIR INLET SCREENS
2. PREMIUM EFFICIENCY MOTORS
3. DIRECT DIGITAL CONTROLS
4. EXTENDED LUBRICATION LINES
5. ALL CONSTRUCTION INCLUDING FRAMING SHALL BE 316 STAINLESS STEEL HOT AND COLD-WATER BASINS
6. MECHANICAL AND ELECTRICAL WATER LEVEL CONTROL
7. PROVIDE SOUND-REDUCING OPTIONS TO MEET NYC CODE:
   - a- LOW NOISE FANS
   - b- VIBRATION REDUCING PADS
   - C- ACOUSTIC LOUVERS/ENCLOSURES/WALLS
8. SOLID-STATE ELECTRONIC VIBRATION CUTOUT SWITCH WITH REMOTE RESET CAPABILITY
9. BASIN WATER HEATER LOCATED AT THE BASIN OF COOLING TOWER
10. VARIABLE FREQUENCY DRIVE FOR EACH FAN MOTOR TO BE MANUFACTURED BY ABB
11. MINIMUM FAN SPEED WILL BE AS LOW AS THE VFD ALLOWS. PER MANUFACTURER RECOMMENDATIONS THE MIN. RPM SHOULD NOT BE LESS THAN 25% OF THE MAX. RPM
12. COOLING TOWERS ARE TO BE PROVIDED WITH ALL REQUIRED LADDERS AND RAILING PACKAGE FOR PROPER ACCESS FOR MAINTENANCE AND INSPECTION
13. SELECTION BASED ON 40% PROPYLENE GLYCOL PROCESS FLUID

CONDENSER WATER PUMP SCHEDULE+B2:S10

Bell & Gosset as Standard

Equipment No.	Model No.	Type	Location	GPM	TDH	EFF. %	NPSH	Min. Flow Cap. GPM	BHP	Impeller Dia. (in)	RPM	Motor Data			Dimensions (Disch X Suct X Vol)	Weight (lbs)	Remark
												HP	V/Ph/Hz	FLA			
CWP-1	5X6X13.5A SERIES VSX-VSC	DOUBLE SUCTION	ROOM MER	1450	127	80.7	9.32	308	59.3	12.625	1725	75	460/60/3	96	5 X 6 X 13.5	2571	PROVIDE MOTOR WITH VFD STARTER
CWP-2	5X6X13.5A SERIES VSX-VSC	DOUBLE SUCTION	ROOM MER	1450	127	80.7	9.32	308	59.3	12.625	1725	75	460/60/3	96	5 X 6 X 13.5	2571	PROVIDE MOTOR WITH VFD STARTER
CWP-3	5X6X13.5A SERIES VSX-VSC	DOUBLE SUCTION	ROOM MER	1450	127	80.7	9.32	308	59.3	12.625	1725	75	460/60/3	96	5 X 6 X 13.5	2571	PROVIDE MOTOR WITH VFD STARTER

Comments:

1. VARIABLE FREQUENCY DRIVE FOR EACH PUMP MOTOR BY ABB
2. REUSE EXISTING INERTIA BLOCK AND HOUSEKEEPING CONCRETE PAD
3. PROVIDE SHAFT GROUNDING RINGS FOR ALL PUMPS POWERED VIA VFD
4. SELECTION BASED ON 40% PROPYLENE GLYCOL
5. (2) DUTY + (1) STANDBY

GLYCOL MAKEUP UNIT SCHEDULE

Bell & Gosset as Standard

General Information			Performance			Containment Basin		Electrical			
Unit No.	Location	System Served	Tank Storage Capacity (Gal)	Pump Rated Pressure (psi)	Output (GPH)	Dimensions (L" X W" X H")	Capacity (gal)	Pump (HP)	Volt/Ph/Hz	Model No.	Comments
GMU-1	ROOF MER	CWP	55	40	6	19x16x60	55	2	115/1/60	GMU560P	

Comments:

1. UNIT SHALL CONSIST OF A BASE UNIT/TANKS AND CHEMICAL METERING PUMP
2. PROVIDE THE FOLLOWING: 10FT. TRANSFER LINE, 1" HOSE WITH BALL VALVE, FEMALE QUICK CONNECT, LEVEL GAUGE WITH CALIBRATED SIGHT GLASS
3. PROVIDE CONTAINMENT BASIN AND FEED PUMP
4. INSTALL THE UNIT ON 4" CONCRETE HOUSEKEEPING PAD
5. THE SYSTEM SHALL CONTAIN 40% GLYCOL

AIR SEPARATOR SCHEDULE

Bell & Gosset as Standard

General Information				Performance Data				Inlet Size (in)	Drain Size (in)	NPT Air Outlet Size (in)	Tank Size (Dia" X H")	Weight (lbs)	Comments
Unit No.	Model No.	Location	System Served	System Flow Rate (GPM)	Max. Flow @ 4FPS (GPM)	Max. Working Press. (psi)	Max. Working Temp (°F)						
AS-1	RL-10F	ROOF MER	CT	2700	3600	125	350	10	2	2	38 x 65	2052	

Comments:

1. PROVIDE HIGH CAPACITY AUTOMATIC AIR VENT.

EXPANSION TANK SCHEDULE

Bell & Gossett as Standard

General Information			Performance Data					Tank Size L x Dia. (in)	Inlet (in.)	CW Fill Size (in.)	Type	Model No.	Comments
Equip. No.	Location	Service	Tank Volume (gal)	Acceptance Vol. (gal)	Initial Press. (psi)	Relief Valve (max. psi)	Tank (max. psi)						
ET-1	ROOF MER	CT	211	211	15	50	50	76 x 32	2	1	-	B-800	
ET-2	ROOF MER	CT	211	211	15	50	50	76 x 32	2	1	-	B-800	

Comments:

1. SUPPORTED FROM ABOVE
2. BLADDER TYPE TANK
3. UNIT SHALL BE SMALL FRAME

VIBRATION ISOLATOR SCHEDULE

Vibro-Acoustics as Standard

Model No.	Location	Base Mounting Type	Isolator Type	Rated Load	Static Deflection (in)	Weight (lbs)	Dimensions (L" x W" x H")	Quantity
SCSR-4A-7600	ROOF	STRUCTURAL STEEL DUNNAGE	RESTRAINED SPRING ISOLATOR	7,600	4	123.9	23-7/8 x 10-5/8 x 11	REFER TO PLAN

Comments:

1. EQUIPMENT LOCATED OUTDOORS THAT IS SUBJECTED TO WIND FORCES RESTRAINED SPRINGS ISOLATORS (MASTON TYPE SLR) SHALL BE USED.
2. LARGER EQUIPMENT THAT GENERATES A SUBSTANTIAL AMOUNT OF VIBRATORY FORCES INCREASES THE ISOLATOR DEFLECTION.

DOB APPROVAL STAMP

COOLING TOWER REPLACEMENT

BRONX DISTRICT ATTORNEY'S OFFICE
198 E 161ST STREET
NEW YORK, NEW YORK 10451

SPONSOR AGENCY:
DEPARTMENT OF CITYWIDE ADMINISTRATIVE SERVICES
MANHATTAN MUNICIPAL BUILDING
ONE CENTER STREET, 17 FLOOR SOUTH;
NEW YORK, NEW YORK 10007

MANAGING AGENCY:
DEPARTMENT OF DESIGN AND CONSTRUCTION
30-30 THOMSON AVENUE;
LONG ISLAND CITY, NEW YORK 10007

ARCHITECT:
NANDINEE PHOOKAN ARCHITECT
45 MAIN STREET SUITE #620
BROOKLYN NY 11201
P: 718.643.9500

STRUCTURAL ENGINEER:
LERA CONSULTING STRUCTURAL ENGINEERS
40 WALL STREET, FLOOR 23
NEW YORK, NY 10005
P: 212 750 9000

MEP ENGINEER:
DEWBERRY ENGINEERS
132 WEST 31ST STREET, SUITE 301
NEW YORK, NEW YORK 10001
P: 646 434 2822

PLUMBING ENGINEER:
AXON ENGINEERING SERVICES, LLC
222 OUTWATER LN, SUITE 3A
GARFIELD, NJ 07026
p: 917 677 2484

KEY PLAN:

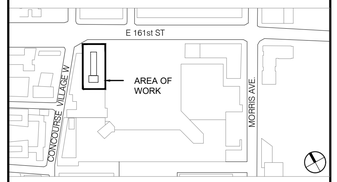

REVISIONS:

NUMBER	DESCRIPTION	DATE
	ISSUED FOR BID	01-27-2026
	ADDENDUM #4	05-19-2026

NYC DDC **Department of Design and Construction**

DIVISION OF PUBLIC BUILDINGS

CAPITAL PROJECT NUMBER:
PW77198CT

PROJECT
198 E 161ST STREET COOLING TOWER REPLACEMENT
198 E 161ST ST
BRONX, NY 10451

FOR THE:
Department of Citywide Administrative Services (DCAS)

DOB NOW APPLICATION: X01141830-I1

DRAWING TITLE:
MECHANICAL SCHEDULE

SEAL & SIGNATURE



DATE:	02 May, 2025
PROJECT NO:	22_01
DRAWN BY:	AF
CHECKED BY:	AA
DRAWING NUMBER:	M-003.00
CADO FILE No:	03 OF 08

KEY NOTES:

1. CONTRACTOR TO DRAIN PROTIONS OF CONDENSER WATER SYSTEM TO BE REMOVED. CAP/SEAL AND KEEP ANY PORTIONS OF THE SYSTEM WHICH ARE TO REMAIN AND BE REUSED FILLED WITH WATER.
2. EXISTING EQUIPMENT TO REMAIN.
3. REMOVE EXISTING CONDENSER WATER PUMP.
4. REMOVE EXISTING COOLING TOWER.
5. REMOVE ALL EXISTING CONTROL AND SENSORS INCLUDING CONTROL PANEL.
6. REMOVE ALL PIPING TO POINT OF DISCONNECTION.
7. REMOVE HANGERS, SUPPORTS, INSULATION AND ALL OTHER APPURTENANCES.
8. EXISTING CONCRETE INERTIA BASE TO REMAIN.
9. REFER TO PHASING PLANS (G-100.00 AND G-101.00) FOR ADDITIONAL SEQUENCING INFORMATION.

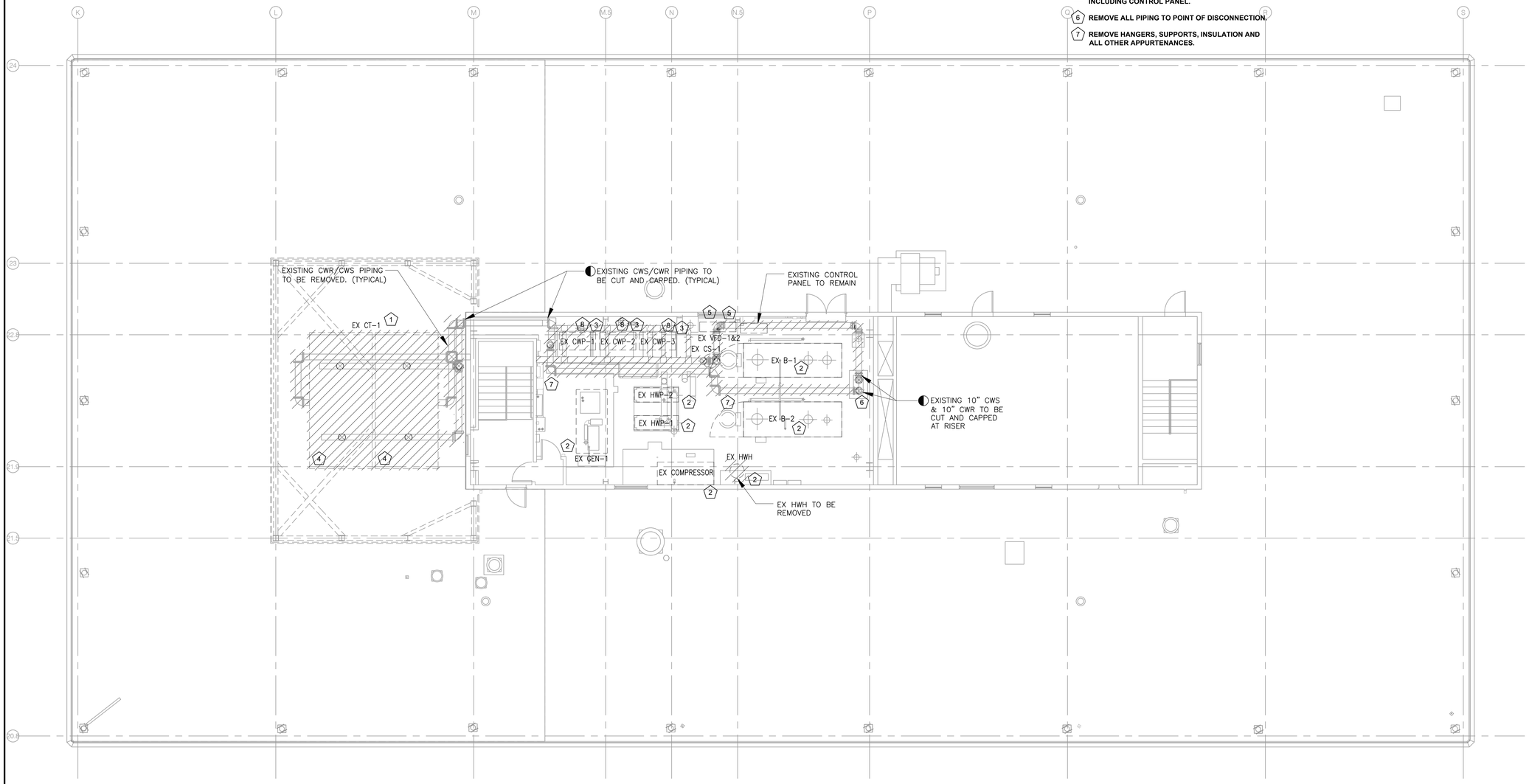

01 EXISTING MAIN ROOF/BULKHEAD PLAN
SCALE: 1/8" = 1'-0"

COOLING TOWER REPLACEMENT

BRONX DISTRICT ATTORNEY'S OFFICE
198 E 161ST STREET
NEW YORK, NEW YORK 10451

SPONSOR AGENCY:
DEPARTMENT OF CITYWIDE ADMINISTRATIVE SERVICES
MANHATTAN MUNICIPAL BUILDING
ONE CENTER STREET, 17 FLOOR SOUTH;
NEW YORK, NEW YORK 10007

MANAGING AGENCY:
DEPARTMENT OF DESIGN AND CONSTRUCTION
30-30 THOMSON AVENUE;
LONG ISLAND CITY, NEW YORK 10007

ARCHITECT:
NANDINEE PHOOKAN ARCHITECT
45 MAIN STREET SUITE #620
BROOKLYN NY 11201
P: 718.643.9500

STRUCTURAL ENGINEER:
LERA CONSULTING STRUCTURAL ENGINEERS
40 WALL STREET, FLOOR 23
NEW YORK, NY 10005
P: 212 750 9000

MEP ENGINEER:
DEWBERRY ENGINEERS
132 WEST 31ST STREET, SUITE 301
NEW YORK, NEW YORK 10001
P: 646 434 2822

PLUMBING ENGINEER:
AXON ENGINEERING SERVICES, LLC
222 OUTWATER LN, SUITE 3A
GARFIELD, NJ 07026
p: 917 677 2484

KEY PLAN:

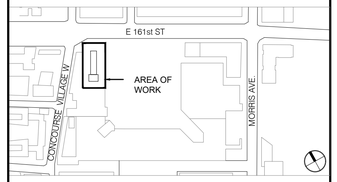

REVISIONS:

NUMBER	DESCRIPTION	DATE
	ISSUED FOR BID	01-27-2026

Department of Design and Construction

DIVISION OF PUBLIC BUILDINGS

CAPITAL PROJECT NUMBER:
PW77198CT

PROJECT
198 E 161ST STREET COOLING TOWER REPLACEMENT
198 E 161ST ST
BRONX, NY 10451

FOR THE:
Department of Citywide Administrative Services (DCAS)

DOB NOW APPLICATION: X01141830-I1

DRAWING TITLE:
MECHANICAL COOLING TOWER DEMOLITION PLAN

DOB APPROVAL STAMP

SEAL & SIGNATURE



DATE:	02 May, 2025
PROJECT NO:	22_01
DRAWN BY:	AF
CHECKED BY:	AA
DRAWING NUMBER:	M-100.00
CADO FILE No:	04 OF 08

KEY NOTES:

1. UPON COMPLETION OF CONDENSER WATER PIPING AND PUMP WORK, CONTRACTOR TO DRAIN ENTIRE CONDENSER WATER SYSTEM AND FILL WITH 40% PROPYLENE GLYCOL SOLUTION.
2. EXISTING EQUIPMENT TO REMAIN PROTECTED DURING CONSTRUCTION.
3. PROVIDE CONDENSER WATER PUMP.
4. PROVIDE COOLING TOWER.
5. PROVIDE ALL EXISTING CONTROL AND SENSORS INCLUDING CONTROL PANEL.
6. RECONNECT ALL PIPING TO POINT OF CONNECTION. SECTION OF EXISTING PIPING SHALL REMAIN IN PLACE.
7. PROVIDE HANGERS, SUPPORTS, RIGID FOAM INSULATION AND ALL OTHER APPURTENANCES. CONTRACTOR TO FINALIZE INSTALLATION PHASING BETWEEN EXISTING AND PIPING
8. PROVIDE EXPANSION TANK TO BE SUPPORTED OVERHEAD WITH AUXILIARY STEEL, COORDINATE FINAL LOCATION IN FIELD TO MAINTAIN REQUIRED HEAD CLEARANCE AND CLEAR PATH THROUGHOUT THE SPACE. ET SHALL BE ELEVATED TO BEAM HAUNCH TO MAINTAIN A MINIMUM CLEARANCE 90". SUPPORT EACH ET FROM BASE BUILDING STEEL WITH BEAM CLAMPS AND THREADED ROD. SUPPORT FOR EACH ET SHALL BE BACK TO BACK 4" STEEL CHANNELS.
9. PROVIDE AIR SEPARATOR
10. PROVIDE GLYCOL MAKE UP UNIT
11. PROVIDE DRIP PAN ABOVE VFD WITH 1" DRAIN PIPE ROUTED TO NEAREST FLOOR DRAIN
12. COORDINATE WITH EXISTING HOT WATER PIPE, NOT IN SCOPE
13. REFER TO PHASING PLANS (G-100.00 AND G-101.00) FOR ADDITIONAL SEQUENCING INFORMATION.
14. ALL CONDENSER WATER PIPING SHALL BE WELDED.
15. INSTALL PIPING FOR THE PROPOSED CLOSED SYSTEM TO ALLOW THE EXISTING OPEN SYSTEM TO REMAIN IN PLACE AND OPERABLE DURING THE CLOSED SYSTEM INSTALLATION. COORDINATE PIPE ROUTES AND GRADES WITH SITE CONDITIONS. REFER TO PHASING PLANS FOR ADDITIONAL REQUIREMENTS. UPON SWITCH OVER TO CLOSED SYSTEM OPERATION, ADJUST PIPE ROUTES AND GRADES.
16. PROVIDE 4" BYPASS LINE AND 2-WAY PRESSURE INDEPENDENT MODULATING CONTROL VALVE. VALVE TO BE SIZED TO MAINTAIN MINIMUM FLOW RATE OF ONE CW PUMP. SEE CONTROL DRAWINGS AND SEQUENCE FOR ADDITIONAL INFORMATION.

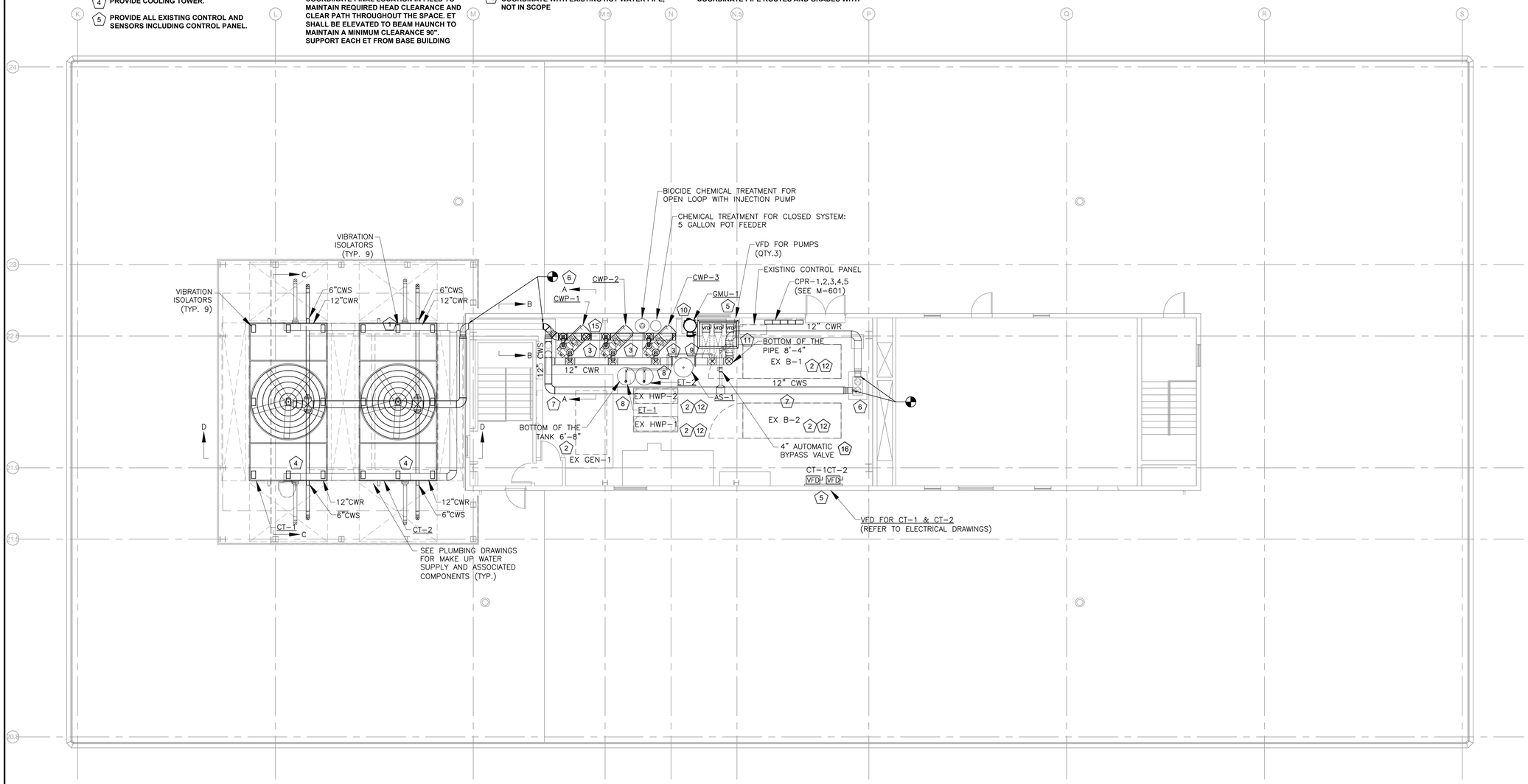

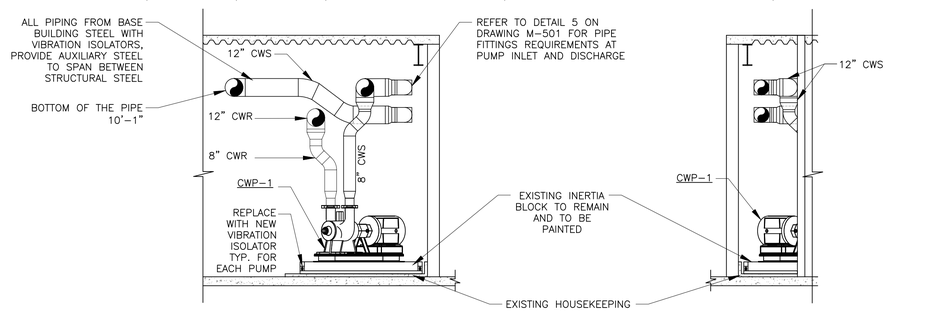

01 EXISTING MAIN ROOF/BULKHEAD PLAN
SCALE: 1/8" = 1'-0"

02 SECTION A-A
SCALE: 1/4" = 1'-0"

03 SECTION B-B
SCALE: 1/4" = 1'-0"

DOB APPROVAL STAMP

COOLING TOWER REPLACEMENT

BRONX DISTRICT ATTORNEY'S OFFICE
198 E 161ST STREET
NEW YORK, NEW YORK 10451

SPONSOR AGENCY:
DEPARTMENT OF CITYWIDE ADMINISTRATIVE SERVICES
MANHATTAN MUNICIPAL BUILDING
ONE CENTER STREET, 17 FLOOR SOUTH;
NEW YORK, NEW YORK 10007

MANAGING AGENCY:
DEPARTMENT OF DESIGN AND CONSTRUCTION
30-30 THOMSON AVENUE;
LONG ISLAND CITY, NEW YORK 10007

ARCHITECT:
NANDINEE PHOOKAN ARCHITECT
45 MAIN STREET SUITE #620
BROOKLYN NY 11201
P: 718.643.9500

STRUCTURAL ENGINEER:
LERA CONSULTING STRUCTURAL ENGINEERS
40 WALL STREET, FLOOR 23
NEW YORK, NY 10005
P: 212 750 9000

MEP ENGINEER:
DEWBERRY ENGINEERS
132 WEST 31ST STREET, SUITE 301
NEW YORK, NEW YORK 10001
P: 646 434 2822

PLUMBING ENGINEER:
AXON ENGINEERING SERVICES, LLC
222 OUTWATER LN, SUITE 3A
GARFIELD, NJ 07026
p: 917 677 2484

KEY PLAN:

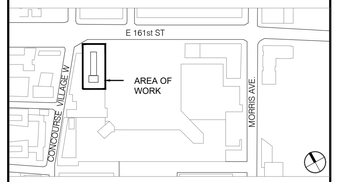

REVISIONS:

NUMBER	DESCRIPTION	DATE
	ISSUED FOR BID	01-27-2026

Department of Design and Construction

DIVISION OF PUBLIC BUILDINGS

CAPITAL PROJECT NUMBER:
PW77198CT

PROJECT
198 E 161ST STREET COOLING TOWER REPLACEMENT
198 E 161ST ST
BRONX, NY 10451

FOR THE:
Department of Citywide Administrative Services (DCAS)

DOB NOW APPLICATION: X01141830-I1

DRAWING TITLE:
MECHANICAL COOLING TOWER CONSTRUCTION PLAN

SEAL & SIGNATURE



DATE:	02 May, 2025
PROJECT NO:	22_01
DRAWN BY:	AF
CHECKED BY:	AA
DRAWING NUMBER:	M-101.00
CADO FILE No:	
	05 OF 08

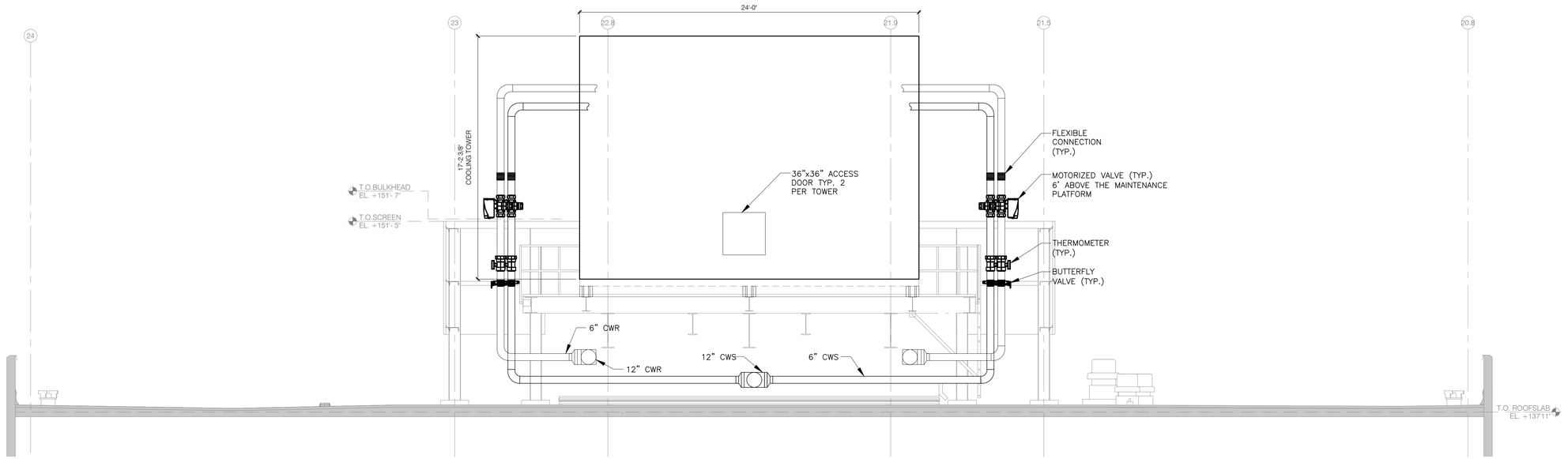

01 SECTION C-C THRU COOLING TOWER

SCALE: 1/4" = 1'-0"

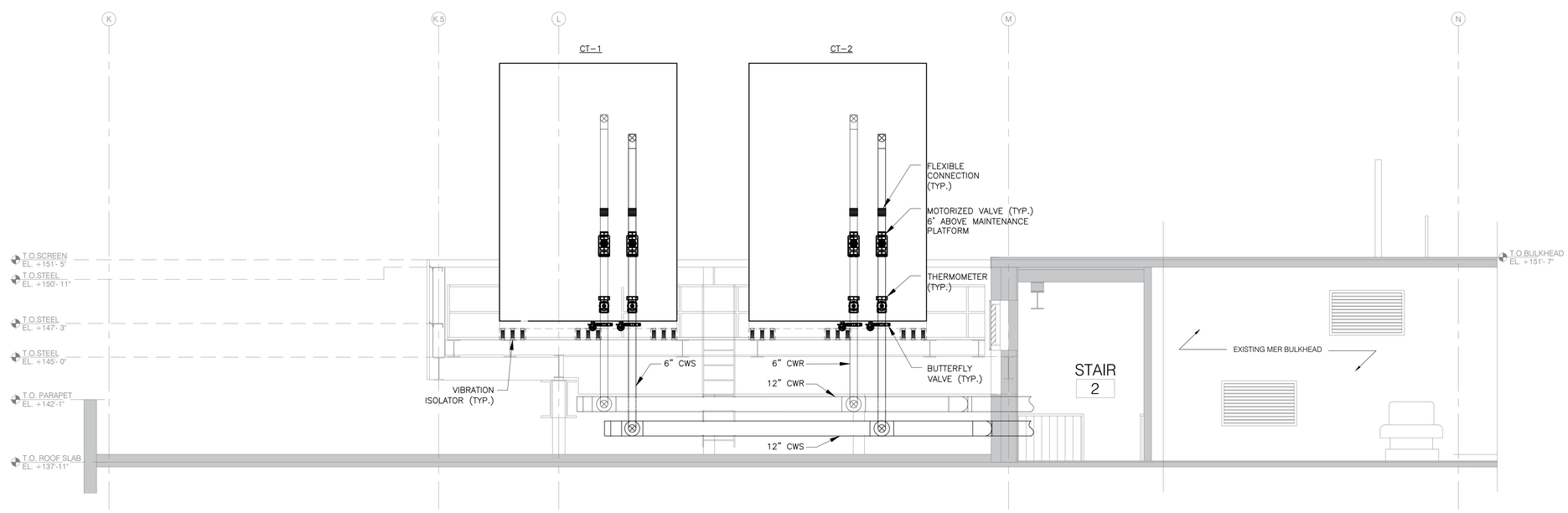

02 SECTION D-D THRU COOLING TOWER

SCALE: 1/4" = 1'-0"

DOB APPROVAL STAMP

COOLING TOWER REPLACEMENT

BRONX DISTRICT ATTORNEY'S OFFICE
198 E 161ST STREET
NEW YORK, NEW YORK 10451

SPONSOR AGENCY:
DEPARTMENT OF CITYWIDE ADMINISTRATIVE SERVICES
MANHATTAN MUNICIPAL BUILDING
ONE CENTER STREET, 17 FLOOR SOUTH;
NEW YORK, NEW YORK 10007

MANAGING AGENCY:
DEPARTMENT OF DESIGN AND CONSTRUCTION
30-30 THOMSON AVENUE;
LONG ISLAND CITY, NEW YORK 10007

ARCHITECT:
NANDINEE PHOOKAN ARCHITECT
45 MAIN STREET SUITE #620
BROOKLYN NY 11201
P: 718.643.9500

STRUCTURAL ENGINEER:
LERA CONSULTING STRUCTURAL ENGINEERS
40 WALL STREET, FLOOR 23
NEW YORK, NY 10005
P: 212 750 9000

MEP ENGINEER:
DEWBERRY ENGINEERS
132 WEST 31ST STREET, SUITE 301
NEW YORK, NEW YORK 10001
P: 646 434 2822

PLUMBING ENGINEER:
AXON ENGINEERING SERVICES, LLC
222 OUTWATER LN, SUITE 3A
GARFIELD, NJ 07026
p: 917 677 2484

KEY PLAN:

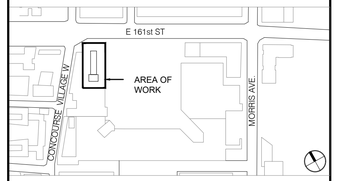

REVISIONS:

NUMBER	DESCRIPTION	DATE
	ISSUED FOR BID	01-27-2026

NYC DDC Department of Design and Construction

DIVISION OF PUBLIC BUILDINGS

CAPITAL PROJECT NUMBER:
PW77198CT

PROJECT
198 E 161ST STREET COOLING TOWER REPLACEMENT
198 E 161ST ST
BRONX, NY 10451

FOR THE:
Department of Citywide Administrative Services (DCAS)

DOB NOW APPLICATION: X01141830-I1

DRAWING TITLE:
MECHANICAL COOLING TOWER SECTIONS

SEAL & SIGNATURE



DATE:	02 May, 2025
PROJECT NO:	22_01
DRAWN BY:	AF
CHECKED BY:	AA
DRAWING NUMBER:	M-102.00
CADO FILE No:	

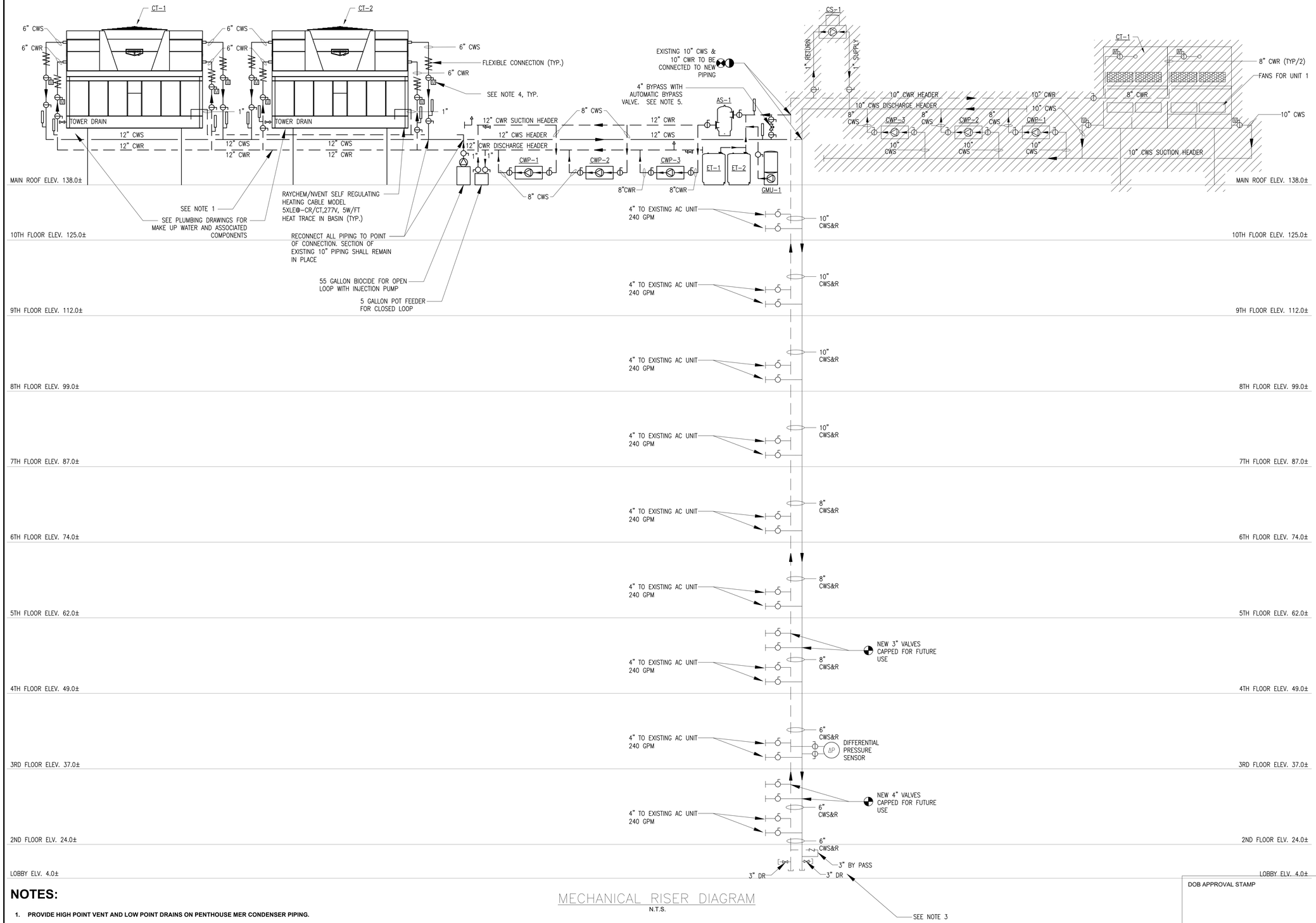

MECHANICAL RISER DIAGRAM
N.T.S.

NOTES:

1. PROVIDE HIGH POINT VENT AND LOW POINT DRAINS ON PENTHOUSE MER CONDENSER PIPING.
2. ALL EXISTING AC NEED TO BE PRETESTED TO CONFIRM FLOW RATE SO THAT THE RATE CAN BE MATCHED POST CONSTRUCTION.
3. BY PASS TO STAY IN PLACE UNTIL THE SYSTEM SWITCHES FROM (EXISTING) CONSTANT VOLUME TO (PROPOSED) VARIABLE VOLUME.
4. ALL MOTORIZED VALVES SHOULD BE INSTALLED IN EASILY ACCESSIBLE LOCATIONS, TYP.
5. PROVIDE 4" BYPASS LINE AND 2-WAY PRESSURE INDEPENDENT MODULATING CONTROL VALVE. VALVE TO BE SIZED TO MAINTAIN MINIMUM FLOW RATE OF ONE CW PUMP. SEE CONTROL DRAWINGS AND SEQUENCE FOR ADDITIONAL INFORMATION.

COOLING TOWER REPLACEMENT

BRONX DISTRICT ATTORNEY'S OFFICE
198 E 161ST STREET
NEW YORK, NEW YORK 10451

SPONSOR AGENCY:
DEPARTMENT OF CITYWIDE ADMINISTRATIVE SERVICES
MANHATTAN MUNICIPAL BUILDING
ONE CENTER STREET, 17 FLOOR SOUTH;
NEW YORK, NEW YORK 10007

MANAGING AGENCY:
DEPARTMENT OF DESIGN AND CONSTRUCTION
30-30 THOMSON AVENUE;
LONG ISLAND CITY, NEW YORK 10007

ARCHITECT:
NANDINEE PHOOKAN ARCHITECT
45 MAIN STREET SUITE #620
BROOKLYN NY 11201
P: 718.643.9500

STRUCTURAL ENGINEER:
LERA CONSULTING STRUCTURAL ENGINEERS
40 WALL STREET, FLOOR 23
NEW YORK, NY 10005
P: 212 750 9000

MEP ENGINEER:
DEWBERRY ENGINEERS
132 WEST 31ST STREET, SUITE 301
NEW YORK, NEW YORK 10001
P: 646 434 2822

PLUMBING ENGINEER:
AXON ENGINEERING SERVICES, LLC
222 OUTWATER LN, SUITE 3A
GARFIELD, NJ 07026
p: 917 677 2484

KEY PLAN:

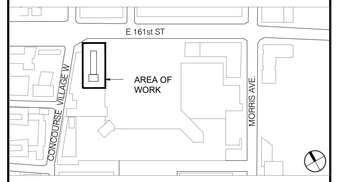

REVISIONS:

NUMBER	DESCRIPTION	DATE
	ISSUED FOR BID	01-27-2026

Department of Design and Construction

DIVISION OF PUBLIC BUILDINGS

CAPITAL PROJECT NUMBER:
PW77198CT

PROJECT
198 E 161ST STREET COOLING TOWER REPLACEMENT
198 E 161ST ST
BRONX, NY 10451

FOR THE:
Department of Citywide Administrative Services (DCAS)

DOB NOW APPLICATION: X01141830-I1

DRAWING TITLE:
MECHANICAL RISER DIAGRAM

DOB APPROVAL STAMP

SEAL & SIGNATURE



DATE:	02 May, 2025
PROJECT NO:	22_01
DRAWN BY:	AF
CHECKED BY:	AA
DRAWING NUMBER:	M-401.00
CADO FILE No:	
	06 OF 08

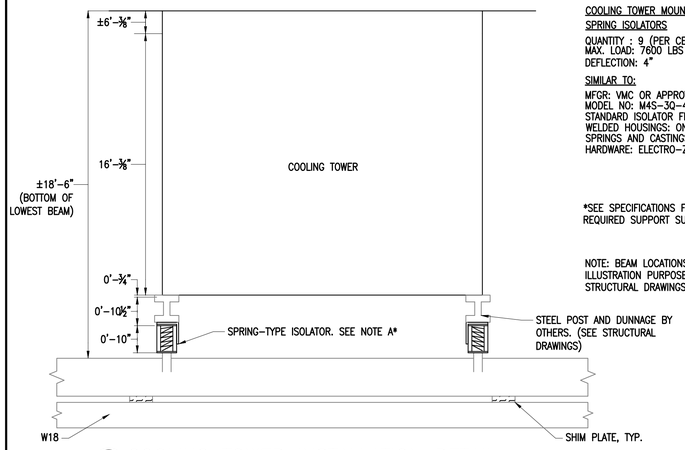

1 M-501 COOLING TOWER INSTALLATION DETAIL

N.T.S.

NOTE A:

COOLING TOWER MOUNTING

SPRING ISOLATORS

QUANTITY : 9 (PER CELL)
MAX. LOAD: 7600 LBS
DEFLECTION: 4"

SIMILAR TO:

MFGR: VMC OR APPROVED EQUAL
MODEL NO: M4S-3Q-4480
STANDARD ISOLATOR FINISH:
WELDED HOUSINGS: ONE COAT GRAY PAINT
SPRINGS AND CASTINGS: EPOXY POWDER COATED
HARDWARE: ELECTRO-ZINC PLATED

*SEE SPECIFICATIONS FOR
REQUIRED SUPPORT SUBMITTALS.

NOTE: BEAM LOCATIONS SHOWN FOR
ILLUSTRATION PURPOSES ONLY. REFER TO
STRUCTURAL DRAWINGS FOR FRAMING LAYOUT.

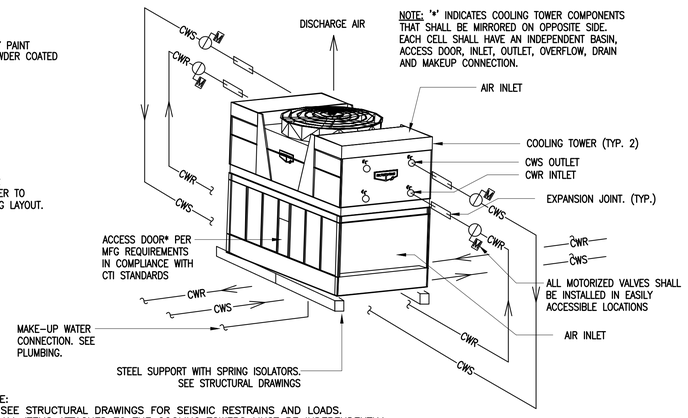

NOTE:
1. SEE STRUCTURAL DRAWINGS FOR SEISMIC RESTRAINS AND LOADS.
2. ALL ITEMS ATTACHED TO THE COOLING TOWERS MUST BE INDEPENDENTLY SUPPORTED AND ISOLATED TO MEET APPLICABLE WIND AND SEISMIC LOADS. THIS INCLUDES PIPING, DUCTWORK, CONDUIT, AND ELECTRICAL CONNECTIONS.

4 M-501 CT-1 AND CT-2 CLOSED CIRCUIT COOLING DETAIL

N.T.S.

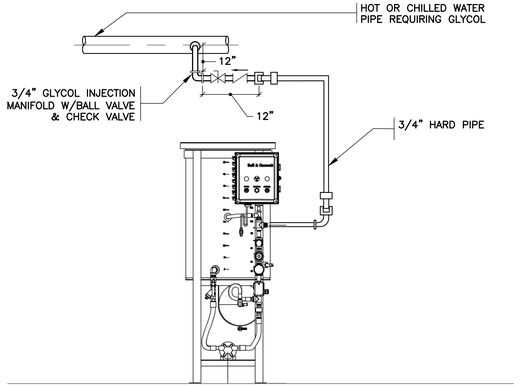

NOTE:
SYSTEM IS 40% PROPYLENE GLYCOL BY VOLUME.

6 M-501 NON-AUTOMATIC GLYCOL FEEDER DETAIL

N.T.S.

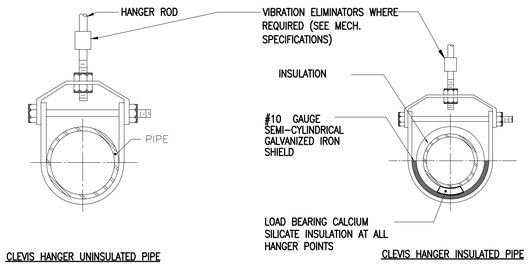

2 M-501 CLEVIS ROLLER HANGER

N.T.S.

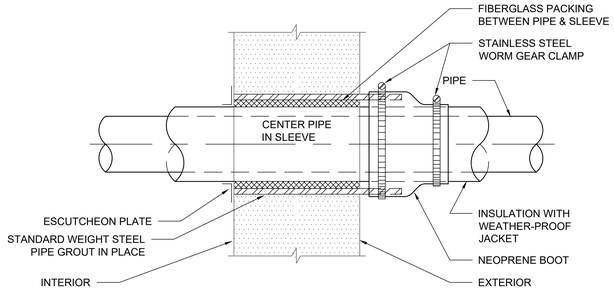

3 M-501 EXTERIOR WALL PIPE PENETRATION

N.T.S.

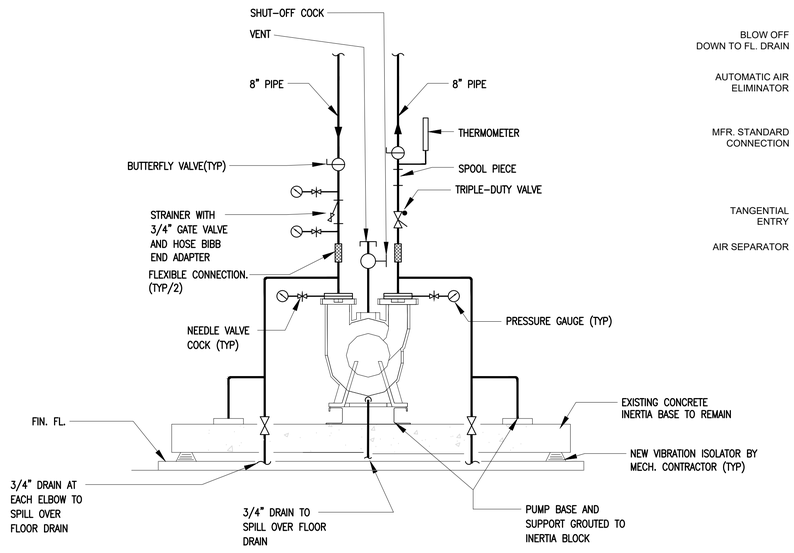

5 M-501 VERTICAL SPLIT CASE PUMP INSTALLATION

N.T.S.

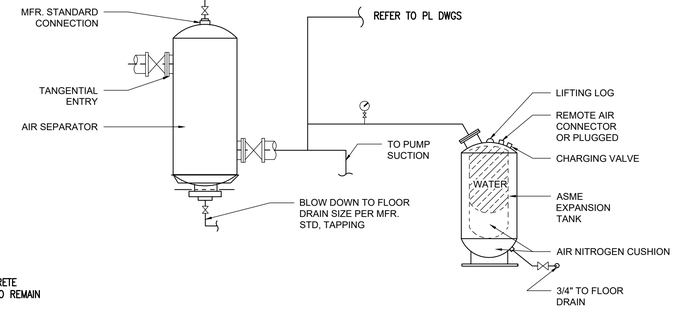

NOTE: REFER TO RISER DIAGRAM FOR ADDITIONAL REQUIREMENT.

7 M-501 OVERHEAD EXPANSION TANK WITH AIR SEPARATOR

N.T.S.

DOB APPROVAL STAMP

COOLING TOWER REPLACEMENT

BRONX DISTRICT ATTORNEY'S OFFICE
198 E 161ST STREET
NEW YORK, NEW YORK 10451

SPONSOR AGENCY:
DEPARTMENT OF CITYWIDE ADMINISTRATIVE SERVICES
MANHATTAN MUNICIPAL BUILDING
ONE CENTER STREET, 17 FLOOR SOUTH;
NEW YORK, NEW YORK 10007

MANAGING AGENCY:
DEPARTMENT OF DESIGN AND CONSTRUCTION
30-30 THOMSON AVENUE;
LONG ISLAND CITY, NEW YORK 10007

ARCHITECT:
NANDINEE PHOOKAN ARCHITECT
45 MAIN STREET SUITE #620
BROOKLYN NY 11201
P: 718.643.9500

STRUCTURAL ENGINEER:
LERA CONSULTING STRUCTURAL ENGINEERS
40 WALL STREET, FLOOR 23
NEW YORK, NY 10005
P: 212 750 9000

MEP ENGINEER:
DEWBERRY ENGINEERS
132 WEST 31ST STREET, SUITE 301
NEW YORK, NEW YORK 10001
P: 646 434 2822

PLUMBING ENGINEER:
AXON ENGINEERING SERVICES, LLC
222 OUTWATER LN, SUITE 3A
GARFIELD, NJ 07026
p: 917 677 2484

KEY PLAN:

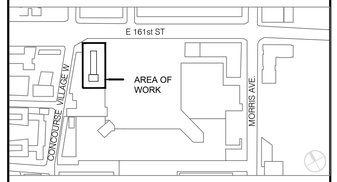

REVISIONS:

NUMBER	DESCRIPTION	DATE
	ISSUED FOR BID	01-27-2026

NYC DDC Department of Design and Construction

DIVISION OF PUBLIC BUILDINGS

CAPITAL PROJECT NUMBER:
PW77198CT

PROJECT
198 E 161ST STREET COOLING TOWER REPLACEMENT
198 E 161ST ST
BRONX, NY 10451

FOR THE:
Department of Citywide Administrative Services (DCAS)

DOB NOW APPLICATION: X01141830-I1

DRAWING TITLE:
MECHANICAL DETAILS

SEAL & SIGNATURE



DATE:	02 May, 2025
PROJECT NO:	22_01
DRAWN BY:	AF
CHECKED BY:	AA
DRAWING NUMBER:	M-501.00
CADO FILE No:	
	07 OF 08

SEQUENCE OF OPERATIONS:

THE COOLING TOWER CELLS AND CONDENSER WATER PUMPS SHALL BE INTERLOCKED VIA SOFTWARE. THE CONDENSER WATER SYSTEM SHALL OPERATE IN SYSTEM PROGRAM AS FOLLOWS TO COMPLY WITH ASHRAE GUIDELINE 36:

CONDENSER WATER PUMPS.

1. EACH CONDENSER WATER PUMP IS PROGRAMMED WITH AN ON/AUTO/OFF SOFTWARE SWITCH WHICH ALLOWS THE BMS FRONT END WORKSTATION OPERATOR TO MANUALLY START OR STOP THE PUMPS OR PLACE THE PUMPING SYSTEM INTO AUTO MODE. WITH THE SYSTEM IN AUTO MODE, IF THE COOLING TOWER BASIN WATER LEVEL CHECKS, THE CONDENSER WATER PUMPS ARE ENABLED TO FOLLOW THE ABOVE DESCRIBED PROGRAM. A SOFTWARE INTERLOCK SHALL BE ADDED IN THE BMS SYSTEM, VIA A DIFFERENTIAL PRESSURE SENSOR ACROSS THE CONDENSER WATER SUPPLY AND RETURN PUMP HEADERS.
2. EACH PUMP MOTOR IS PROVIDED WITH A VARIABLE FREQUENCY DRIVE STARTER PROGRAMMED TO RUN THE PUMPS.
3. THE SYSTEM IS ALSO PROVIDED WITH A LEAD/LAG SOFTWARE CONFIGURATION WHICH WILL ROTATE THE OPERATING PUMP(S) ON A PRE-DETERMINED SCHEDULE WITH THE PURPOSE OF EQUALIZING THE RUNNING TIME OF ALL THE PUMPS. WHEN A PUMP IS SELECTED AS THE LEAD PUMP IT WILL OPERATE CONTINUOUSLY UNTIL ANOTHER SELECTION IS AUTOMATICALLY ENTERED OR A FAILURE OCCURS.
4. EACH PUMP MOTOR IS ALSO PROVIDED WITH A CURRENT SWITCH WHICH INPUTS THE OPERATING STATUS OF THE PUMP TO ITS DDC CONTROLLER. IF A FAILURE TO START OR RUN OCCURS THE DDC CONTROLLER ENERGIZES THE NEXT LAG PUMP, THE FAILING PUMP IS DISABLED AND A PUMP FAILURE STARTING OF A LAG PUMP ALARM IS SENT TO THE BMS.
5. CONDENSER WATER BYPASS VALVE: THE BYPASS VALVE SHALL BE NORMALLY SHUT. DURING AUTOMATIC MODE OPERATION, IF THE SYSTEM IS OPERATING WITH ONLY A SINGLE CONDENSER WATER PUMP RUNNING AT ITS MINIMUM SPEED AND THE CONDENSER WATER DIFFERENTIAL PRESSURE CONTINUES TO RISE ABOVE SETPOINT DUE TO SYSTEM VALVE CLOSURES, THE BYPASS VALVE SHALL BE MODULATED OPEN TO MAINTAIN THE DIFFERENTIAL PRESSURE SETPOINT. THE CONDENSER WATER PUMP SPEED SHALL NOT BE PERMITTED TO INCREASE BEYOND MINIMUM SPEED WHILE THE BYPASS VALVE IS OPEN AND ADDITIONAL CONDENSER WATER PUMPS SHALL NOT BE PERMITTED TO SEQUENCE ON WHILE THE BYPASS VALVE IS OPEN. IF THE DIFFERENTIAL PRESSURE FALLS BELOW SETPOINT, THE VALVE SHALL BE MODULATED CLOSED AND UPON FULL CLOSURE OF THE BYPASS VALVE, THE CONDENSER WATER PUMPS SHALL RE-ENTER THE AUTO MODE LEAD-LAG VARIABLE SPEED PRESSURE CONTROL NOTED ABOVE.

COOLING TOWERS CLOSED CELL EVAPORATIVE COOLER.

1. THE CONDENSER WATER SYSTEM SHALL OPERATE 24 HOURS A DAY SEVEN DAYS A WEEK, AND THE COOLING TOWERS SHALL ALTERNATE ACCORDINGLY BASED ON RUNTIME AND RUN HOURS.
   IN THE COOLING AND HEATING SEASON BOTH COOLING TOWERS SHALL RUN UNTIL THE DEMAND FOR CONDENSER WATER DROPS BELOW THE SET POINT. WHEN THIS OCCURS THE LEAD COOLING TOWER SHALL BE DISABLED AND THE LAG COOLING TOWER SHALL REMAIN ENERGIZED. THE COOLING TOWER SHALL ALTERNATE BASED ON RUN HOURS.

   EACH COOLING TOWER CELL SHALL BE PROVIDED WITH INLET AND OUTLET TWO-POSITION MOTORIZED VALVES.
2. EACH COOLING TOWER CELL FAN MOTOR SHALL BE PROVIDED WITH A VARIABLE FREQUENCY DRIVE WHICH WILL MODULATE THE FAN SPEED IN RESPONSE TO SUPPLY WATER TEMPERATURE.
3. THE CONDENSER WATER TEMPERATURE SHALL BE PROGRAMMED FROM THE FRONT END WORKSTATION.
4. WHEN A CELL IS INITIATED TO START THE INLET AND OUTLET MOTORIZED VALVES OPEN AND THE VARIABLE FREQUENCY DRIVE IS ENABLED TO CONTINUOUSLY MODULATE THE FAN SPEED IN ORDER TO MAINTAIN THE SUPPLY WATER TEMPERATURE SET POINT. WHEN A CELL IS COMMANDED TO STOP THE REVERSE OCCURS.
5. SHOULD THE OPERATING CELL(S) FAIL TO MAINTAIN THE CONDENSER WATER TEMPERATURE AT SET POINT FOR A PROGRAMMED PERIOD OF TIME THE NEXT AVAILABLE CELL SHALL AUTOMATICALLY START.
6. THE COOLING TOWER CELL SYSTEM IS ALSO PROVIDED WITH A LEAD/LAG SOFTWARE CONFIGURATION WHICH WILL ROTATE THE OPERATING CELLS ON A PRE-DETERMINED SCHEDULE WITH THE PURPOSE OF EQUALIZING THE RUNNING TIME OF ALL THE FANS. WHEN A CELL IS SELECTED AS THE LEAD CELL IT WILL OPERATE CONTINUOUSLY UNTIL ANOTHER SELECTION IS AUTOMATICALLY ENTERED OR A FAILURE OCCURS.
7. EACH FAN MOTOR IS ALSO PROVIDED WITH A CURRENT SWITCH WHICH INPUTS THE OPERATING STATUS OF THE FAN AND SPRAY PUMP TO ITS DDC CONTROLLER. IF A FAILURE TO START OR RUN OCCURS THE CONTROLLER ENERGIZES THE NEXT LAG CELL, THE FAILING FAN IS DISABLED AND A FAN FAILURE STARTING OF A LAG PUMP ALARM IS SENT TO THE BMS.
8. EACH FAN MOTOR SHALL BE LIMITED BY THE SOFTWARE TO OPERATE DOWN TO A MINIMUM CUT-OFF SPEED RATIO OF 25%. IF FURTHER COOLING IS REQUIRED THE NEXT AVAILABLE CELL SHALL AUTOMATICALLY START OPERATING.
9. ON SIMULTANEOUS MULTI-CELL OPERATIONS ALL OF THE VARIABLE FREQUENCY DRIVES SHALL BE AUTOMATICALLY SYNCHRONIZED BY THE SOFTWARE TO SPEED UP AND SLOW DOWN UNIFORMLY.
10. COOLING TOWER LOOP WATER TEMPERATURE CONTROL. THE COOLING TOWER WILL STAGE ITS COMPONENTS, SPRAY PUMP AND FAN IN SEQUENCE TO MAINTAIN SUPPLY TEMPERATURE SETPOINT.

    IN THE COOLING SEASON THE SPRAY PUMPS WILL OPERATE CONTINUOUSLY TO DISTRIBUTE WATER OVER THE EVAPORATED COILS. THE FAN SPEED WILL BE VARIED IN ACCORDANCE WITH THE SUPPLY WATER TEMPERATURE TO THE SYSTEM. UPON A DROP IN SUPPLY WATER TEMPERATURE THE FAN SPEED SHALL DECREASE TO ITS MINIMUM. IF THE WATER TEMPERATURE CONTINUES TO DROP, THE SPRAY PUMPS SHALL TURN OFF. ALTERNATIVELY, UPON A DROP IN SUPPLY WATER TEMPERATURE THE SPRAY PUMPS CAN BE DE-ENERGIZED AND THE FAN SPEED VARIED TO MAINTAIN SUPPLY WATER TEMPERATURE.

    IN THE HEATING SEASON, THE SPRAY WATER PUMPS SHALL BE THE DE-ENERGIZED, AND THE COOLING TOWER FANS MODULATED WITH THE VFD TO MAINTAIN SUPPLY WATER TEMPERATURE SET POINT. IF THE SUPPLY WATER TEMPERATURE CONTINUES TO DROP BELOW SET POINT THE FANS SHALL BE DE-ENERGIZED.
11. COOLING TOWER SPRAY PUMP – SUPPLY WATER TEMPERATURE CONTROL. THE CONTROLLER WILL MEASURE THE SUPPLY WATER TEMPERATURE AND START THE SPRAY PUMP TO MAINTAIN SETPOINT. ON RISING SUPPLY WATER TEMPERATURE, THE CONTROLLER WILL START THE SPRAY PUMP TO MAINTAIN THE COOLING TOWER WATER SUPPLY TEMPERATURE SETPOINT. ALARMS WILL BE PROVIDED AS FOLLOWS:

    11.A. SPRAY PUMP FAILURE: COMMANDED ON, BUT THE STATUS IS OFF.

    11.B. SPRAY PUMP RUNNING IN HAND: COMMANDED OFF, BUT THE STATUS IS ON.
12. OPEN BASIN FREEZE PROTECTION SYSTEM. EACH CELL BASIN IS PROVIDED BY THE MANUFACTURER WITH AN ELECTRIC AUTOMATIC FREEZE PROTECTION SYSTEM. WITH A COOLING TOWER OFF-SERVICE , SHOULD THE CONDENSER WATER IN A CELL BASIN REACH 40 DEG. F THE CELL PROVIDED FREEZE PREVENTION SYSTEM WILL BE ACTIVATED AUTOMATICALLY. A TEMPERATURE LEVEL IN THE BASIN BELOW 40 DEG. F SHALL BE ANNUNCIATED AND ALARM TO THE BMS.
13. OPEN BASIN WATER LEVEL CONTROL.

    13.A. EACH COOLING TOWER CELL SHALL BE PROVIDED WITH A STANDARD MECHANICAL MAKE-UP WATER SYSTEM CONSISTING OF A WATER VALVE AND FLOAT ASSEMBLY.

    13.B. A WATER LEVEL SENSOR CONSISTING OF MULTIPLE HEAVY DUTY STAINLESS STEEL ELECTRODES MOUNTED EXTERNAL TO THE BASIN IN A VERTICAL STAND PIPE SHALL BE FIELD INSTALLED ON EACH CELL.

    13.C. THE WATER LEVEL SENSOR SHALL CONTINUOUSLY INPUT THE WATER LEVEL TO THE DDC CONTROLLER. HIGH AND LOW LEVEL READINGS SHALL BE ANNUNCIATED AND ALARMED TO THE BMS.

COOLING TOWER POINTS LIST

FUNCTION	NAME	DESCRIPTION	SETTING (WITH UNITS)	RANGE (WITH UNITS)	ALARM CONDITION
START/STOP	CT-1	COOLING TOWER STATUS	~	~	
	CT-2	COOLING TOWER STATUS	~	~	
	CT-1 FANS	START STOP FANS	~	ON/OFF	
	CT-2 FANS	START STOP FANS	~	ON/OFF	
	SPRAY PUMP	START STOP PUMP	~	ON/OFF	
TEMPERATURE CONTROL	CW SUPPLY TEMP (CWST)	WATER TEMP	~	~	
	CW RETURN TEMP (CWRT)	WATER TEMP	~	~	
	CW SUPPLY TEMP SETPOINT (CWSTSP)	WATER TEMPERATURE SETPOINT	~	75-100 F	
	CT-1 FAN SPEED	FAN SPEED	~	25-100%	
	CT-1 SPRAY PUMP START/STOP	START-STOP PUMP	~	ON/OFF	
	CT-2 FAN SPEED	FAN SPEED	~	25-100%	
	CT-2 SPRAY PUMP START/STOP	START-STOP PUMP	~	ON/OFF	
BYPASS VALVE CONTROL	CWP-1 STATUS (SPEED)	PUMP SPEED (0-100%)	~	~	
	CWP-2 STATUS (SPEED)	PUMP SPEED (0-100%)	~	~	
	CWP-3 STATUS (SPEED)	PUMP SPEED (0-100%)	~	~	
	CW DIFFERENTIAL PRESSURE	CW LOOP DIFF. PRESSURE READING	~	~	
	CW DIFF. PRESSURE SETPOINT	CW LOOP DIFF. PRESS. SETPOINT (FROM BAS)	~	~	
	CW BYPASS VALVE COMMAND		~	0-100%	
	CW BYPASS VALVE POSITION	BYPASS VALVE POS. FEEDBACK (0-100%)	~	~	
ALARMS	CW SUPPLY TEMP HIGH	WATER HIGH TEMP ALARM	~	ALARM/NORMAL	CWST > CWSTSP + 5F
	CT-1 FAN FAILURE	FAN ALARM	~	ALARM/NORMAL	FAN FAILED
	CT-2 FAN FAILURE	FAN ALARM	~	ALARM/NORMAL	FAN FAILED
	CT-1 BASIN LOW TEMP	LOW WATER TEMP	~	ALARM/NORMAL	TEMP < 40 F
	CT-2 BASIN LOW TEMP	LOW WATER TEMP	~	ALARM/NORMAL	TEMP < 40 F
	CWP-1 FAILURE	PUMP ALARM	~	ALARM/NORMAL	PUMP FAILED
	CWP-2 FAILURE	PUMP ALARM	~	ALARM/NORMAL	PUMP FAILED
	CWP-3 FAILURE	PUMP ALARM	~	ALARM/NORMAL	PUMP FAILED

NOTE:

CPR = CONTROL PANEL AT ROOF

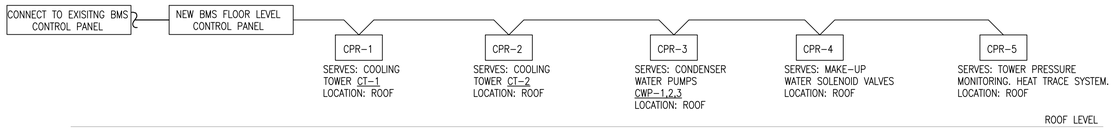

MECHANICAL BUILDING MANAGEMENT SYSTEMS (BMS) RISER DIAGRAM

N.T.S.

CONTROL LEGEND	
	CONTROL WIRE (DIGITAL SIGNAL)
	CONTROL WIRE (ANALOG SIGNAL)
A	ACTUATOR
CS	CURRENT SWITCH
DP	DIFFERENTIAL PRESSURE SENSOR
F	FAN WHEEL
LS	END SWITCH
M	MOTOR
T	TEMPERATURE SENSOR
VFD	VARIABLE FREQUENCY DRIVE
CPR	CONTROL PANEL @ ROOF
CWS	CONDENSER WATER SUPPLY
CWR	CONDENSER WATER RETURN
SP	SPRAY PUMP

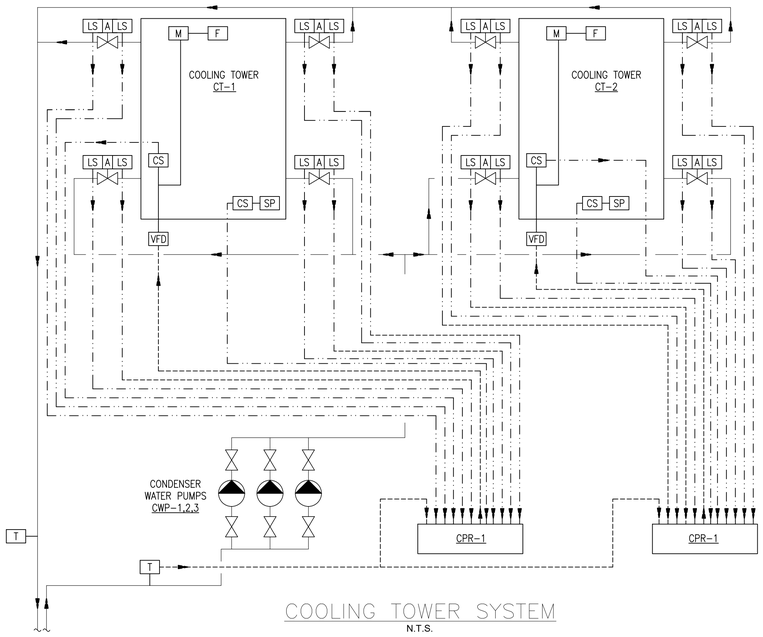

COOLING TOWER SYSTEM

N.T.S.

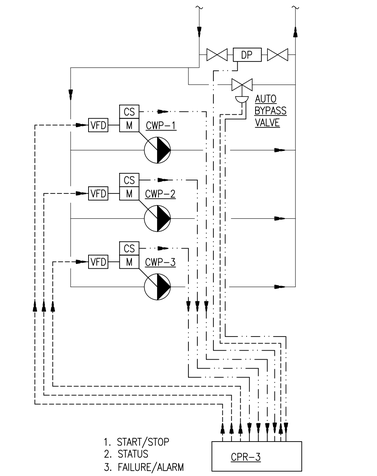

CONDENSER WATER PUMP SYSTEM

N.T.S.

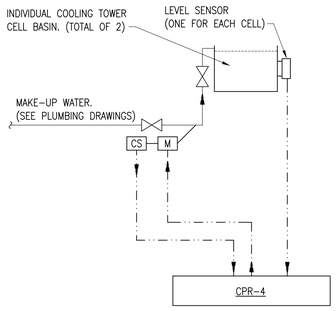

REFER TO PLUMBING DRAWINGS

MAKE-UP WATER SYSTEM

N.T.S.

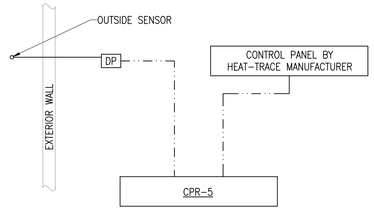

TEMPERATURE SENSOR AND HEAT TRACE SYSTEM

N.T.S.

DOB APPROVAL STAMP

COOLING TOWER REPLACEMENT

BRONX DISTRICT ATTORNEY'S OFFICE
198 E 161ST STREET
NEW YORK, NEW YORK 10451

SPONSOR AGENCY:
DEPARTMENT OF CITYWIDE ADMINISTRATIVE SERVICES
MANHATTAN MUNICIPAL BUILDING
ONE CENTER STREET, 17 FLOOR SOUTH;
NEW YORK, NEW YORK 10007

MANAGING AGENCY:
DEPARTMENT OF DESIGN AND CONSTRUCTION
30-30 THOMSON AVENUE;
LONG ISLAND CITY, NEW YORK 10007

ARCHITECT:
NANDINEE PHOOKAN ARCHITECT
45 MAIN STREET SUITE #620
BROOKLYN NY 11201
P: 718 643 9500

STRUCTURAL ENGINEER:
LERA CONSULTING STRUCTURAL ENGINEERS
40 WALL STREET, FLOOR 23
NEW YORK, NY 10005
P: 212 750 9000

MEP ENGINEER:
DEWBERRY ENGINEERS
132 WEST 31ST STREET, SUITE 301
NEW YORK, NEW YORK 10001
P: 646 434 2822

PLUMBING ENGINEER:
AXON ENGINEERING SERVICES, LLC
222 OUTWATER LN, SUITE 3A
GARFIELD, NJ 07026
p: 917 677 2484

KEY PLAN:

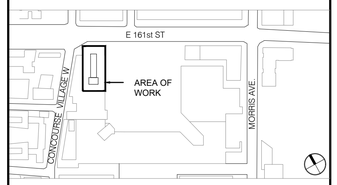

REVISIONS:

NUMBER	DESCRIPTION	DATE
	ISSUED FOR BID	01-27-2026

NYC DDC Department of Design and Construction

DIVISION OF PUBLIC BUILDINGS

CAPITAL PROJECT NUMBER:
PW77198CT

PROJECT
198 E 161ST STREET COOLING TOWER REPLACEMENT
198 E 161ST ST
BRONX, NY 10451

FOR THE:
Department of Citywide Administrative Services (DCAS)

DOB NOW APPLICATION: X01141830-I1

DRAWING TITLE:
MECHANICAL SEQUENCE OF OPERATION, BUILDING MANAGEMENT SYSTEMS (BMS) RISER DIAGRAM, AND CONTROL DIAGRAMS

SEAL & SIGNATURE

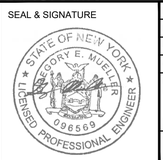

DATE:	02 May, 2025
PROJECT NO:	22_01
DRAWN BY:	AF
CHECKED BY:	AA
DRAWING NUMBER:	M-601.00
CADO FILE No:	08 OF 08

ABBREVIATIONS

ABBR.	DESCRIPTION
BFP	BACK FLOW PREVENTER
CW	COLD WATER
DN	PIPE DOWN THRU FLOOR
DWG	DRAWING
EEW	EMERGENCY EYE/FACE WASH
EL	ELEVATION
FD	FLOOR DRAIN
FL	FLOOR
GPM	GALLON PER MINUTE
HB	HOSE BIBB
HW	HOT WATER
NTS	NOT TO SCALE
PLBG	PLUMBING
RPZ	REDUCED PRESSURE ZONE
RPZA	REDUCED PRESSURE ZONE ASSEMBLY
S	SANITARY
TMV	THERMOSTATIC MIXING VALVE
UP	PIPE RISING THRU FLOOR
EWH	ELECTRIC WATER HEATER
EWS	EMERGENCY EYE WASH STATION

LIST OF SYMBOLS

SYMBOL	DESCRIPTION
	EXISTING PIPING TO REMAIN
	EXISTING PIPING TO BE REMOVED
	COLD WATER – CW
110°	HOT WATER – HW
S	SANITARY ABOVE GROUND – S
	PIPING WITH HEAT TRACE
	PIPE UP OR RISE
	PIPE DN OR DROP
	CAP
	SHUT OFF VALVE
(FD)	FLOOR DRAIN – FD
	CONNECT TO EXISTING
	POINT OF DISCONNECT
IW	INDIRECT WASTE PIPING
TW	TEMPERED WATER 85°
TMV	THERMOSTATIC MIXING VALVE – TMV
	SLEEVE THRU WALL PENETRATION

NOTE:
SYMBOL/ABBREVIATION LIST SHOWN IS FOR GENERAL REFERENCE ONLY. THE PRESENCE OF A SYMBOL/ABBREVIATION DOES NOT IMPLY ITS USE ON THIS PROJECT. REFER TO DRAWINGS FOR SPECIFIC SYMBOLS USED.

PLUMBING DEMOLITION NOTES:

1. ALL EXISTING SYSTEMS SHALL BE LEFT IN PERFECT WORKING ORDER UPON COMPLETION OF ALL NEW WORK.
2. EXACT SIZES AND LOCATIONS OF ALL EXISTING PIPING SHALL BE VERIFIED ON THE JOB SITE.
3. NO REMOVED EXISTING PIPING SHALL BE REUSED UNLESS OTHERWISE INDICATED.
4. THE CONTRACTOR SHALL SUBMIT TO THE ARCHITECT FOR APPROVAL, PRIOR TO INSTALLATION, COMPLETE LAYOUT DRAWINGS INDICATING ALL PIPING SIZING.
5. ALL EXISTING PIPING NOT SPECIFICALLY INDICATED TO BE REMOVED SHALL REMAIN AS IS.
6. ANY AND ALL REQUIRED DEMOLITION WORK TO BE PERFORMED ABOVE EXISTING SUSPENDED CEILINGS AND FURRED OUT WALLS SHALL BE DONE AT THE TIME WHEN THE EXISTING CEILINGS AND FURRED OUT WALLS ARE REMOVED BY THE GENERAL CONTRACTOR.
7. ALL EQUIPMENT AND INSTALLATIONS MUST BE EQUAL TO THE STANDARDS OF THE BASE BUILDING AND DDC STANDARDS. ANY DEVIATION FROM THE STANDARDS WILL BE PERMITTED ONLY IF INDICATED OR SPECIFIED ON THESE PLANS AND SPECIFICATIONS, AND APPROVED.
8. TO ENSURE CONTINUOUS OPERATION, MAKE ALL NECESSARY TEMPORARY CONNECTIONS BETWEEN NEW AND EXISTING WORK. ALL COSTS RESULTING FROM TEMPORARY SHUTDOWNS SHALL BE BORNE BY THIS CONTRACTOR.
9. IT SHALL BE UNLAWFUL FOR ANY PERSON TO PERFORM THE WORK SHOWN ON THE PLUMBING AND DRAINAGE CONTRACT DRAWINGS UNLESS SUCH PERSON IS A LICENSED MASTER PLUMBER, PARTNERSHIP, CORPORATION OR OTHER BUSINESS ASSOCIATION AS PERMITTED BY THE NYC BUILDING CODE AND UNLESS SUCH WORK IS PERFORMED UNDER THE DIRECT AND CONTINUING SUPERVISION OF A LICENSED MASTER PLUMBER.

SPECIAL INSPECTIONS:

SPECIAL INSPECTIONS REQUIRED IN ACCORDANCE WITH CHAPTER 17 OF THE 2022 NYC BUILDING CODE AND THE APPLICABLE SECTIONS OF THE NYC CONSTRUCTION CODE ARE LISTED IN THE FOLLOWING TABLES:

THE CONTRACTOR MUST NOTIFY THE ARCHITECT OR ENGINEER FOR SPECIAL INSPECTIONS AT LEAST 72 HRS BEFORE THE SPECIFIC WORK COMMENCES.

THE "AUTHORITY" SHALL BE RESPONSIBLE FOR THE FOLLOWING SPECIAL INSPECTIONS:	
FIRE-RESISTANT PENETRATIONS AND JOINTS	BC 1705.17
THE "AUTHORITY" SHALL BE RESPONSIBLE FOR THE FOLLOWING PROGRESS INSPECTIONS:	
NONE	–

NOTE: REQUIRED INSPECTIONS AND TESTS OF MATERIALS DESIGNATED FOR SPECIAL INSPECTION BY THE "CONTRACTOR" SHALL BE MADE UNDER THE DIRECT SUPERVISION OF A LICENSED ARCHITECT OR ENGINEER.

GENERAL NOTES:

1. THE ENTIRE PLUMBING SYSTEM SHALL BE IN ACCORDANCE WITH THE LATEST EDITION OF THE NATIONAL STANDARD PLUMBING CODE REGULATIONS AND LOCAL PLUMBING INSPECTOR.
2. PLUMBING CONTRACTOR SHALL VERIFY AND COORDINATE EXACT LOCATION AND INVERTS OF ALL UTILITY CONNECTION.
3. ALL MATERIALS USED SHALL BE NEW UNLESS OTHERWISE NOTED.
4. THE PLUMBING SYSTEM SHALL BE TESTED AS REQUIRED BY LOCAL CODE OR BY THE REQUIREMENTS OF THE LOCAL PLUMBING INSPECTOR.
5. PLUMBING CONTRACTOR SHALL PERFORM ALL TESTS REQUIRED AND FURNISH ALL CERTIFICATES OF INSURANCE AS REQUIRED.
6. THE PIPING INDICATED ON THESE PLANS ARE DIAGRAMATIC. ALL WORK SHALL BE COORDINATED WITH ALL OTHER TRADES PRIOR TO INSTALLATION. CONTRACTOR SHALL COORDINATE ROUTING OF ALL PIPING WITH EXISTING CONDITIONS AND SHALL PROVIDE ANY NECESSARY OFFSETS, REROUTING, TEES, ELBOWS, ETC. REQUIRED FOR A COMPLETE AND COORDINATED INSTALLATION.
7. THE CONTRACTOR SHALL OBTAIN AND PAY ALL FEES RELATED TO PERMITTING, INSPECTIONS, TAP-ON FEES, ETC.
8. ACCESS DOORS SHALL BE PROVIDED FOR ALL CLEANOUTS, VALVES, FLUSH VALVES, AND ANY OTHER EQUIPMENT OR ACCESSORIES THAT MAY REQUIRE ACCESS FOR MAINTENANCE, OR OPERATION WHICH ARE LOCATED BEHIND WALLS AND PARTITIONS OR CONCEALED IN HUNG CEILING.
9. CONTRACTOR SHALL CHECK AND VERIFY THE EXACT LOCATION OF ALL PIPE PENETRATIONS AND MAKE CERTAIN THERE ARE NO OBSTRUCTIONS AND INTERFERENCES.
10. CONTRACTOR SHALL REFER TO AND COORDINATE WITH MECHANICAL DRAWINGS AND WORK FOR EXACT LOCATION OF NEW COOLING TOWER EQUIPMENT.
11. CONTRACTOR SHALL REFER TO AND COORDINATE WITH ARCHITECTURAL AND STRUCTURAL DRAWINGS, INCLUDING, WORK FOR ALL CONCRETE PADS AND OTHER RELEVANT DETAILS.
12. ALL PLUMBING & PIPING SYSTEMS SHALL BE SUPPORTED AS REQUIRED BY THE LOCAL CODE REQUIREMENTS AND PER MANUFACTURER'S RECOMMENDATIONS.
13. ALL PIPING PENETRATIONS THROUGH WALL OR FLOOR SHALL BE SEALED TO EQUAL THE RATING OF THE NEW, EXISTING WALL OR FLOOR.
14. EXISTING FLOORS AND/OR WALLS SHALL BE REPAIRED AND PATCHED AFTER PIPE REPLACEMENT OR INSTALLATION TO MATCH EXISTING CONDITIONS, REFER TO ARCHITECTURAL DRAWINGS.
15. CONTRACTOR SHALL REFER TO AND COORDINATE WITH ELECTRICAL DRAWING AND WORK ENSURING NO PIPE IS RUN DIRECTLY ABOVE NOR WITHIN THREE FEET OF ELECTRICAL PANELS.
16. THE ENTIRE DOMESTIC WATER SYSTEM SHALL BE DISINFECTED IN ACCORDANCE TO THE LOCAL CODE & HEALTH DEPARTMENT REQUIREMENTS.
17. DRAIN ALL LOW POINTS. PROVIDE VALVE AND DRIP.
18. VENT ALL HIGH POINTS OF THE WATER PIPING. PROVIDE AIR RELEASE VALVE.
19. PROVIDE SHUT-OFF VALVES AT ALL EQUIPMENT, PLUMBING FIXTURES AND BRANCHES.
20. PLUMBING: REMOVAL AND RECONNECTION OF SANITARY FIXTURES MUST BE DONE BY A LICENSED MASTER PLUMBER AND FILED WITH DOB AS THE PLUMBING WORK TYPE AS PER 28-105.

NYC BUILDING DEPARTMENT NOTES

ALL PLUMBING WORK SHALL MEET THE REQUIREMENTS OF THE 2014 NYC PLUMBING CODE.

1. PROTECTION OF PIPING AS OUTLINED IN SECTIONS PC 305.1 AND 305.8 SHALL BE PROVIDED AS REQUIRED.
2. TESTING AND INSPECTION OF PLUMBING WORK SHALL BE AS PER SECTION PC 312.
3. CONSTRUCTION, SPACING OF HANGERS AND SUPPORTS, AND SEISMIC SUPPORTS SHALL BE IN ACCORDANCE WITH SECTION PC 308 AND PC TABLE 308.5.
4. WATER SUPPLY SYSTEM AND TESTING SHALL BE AS REQUIRED BY SECTION PC 312.5. VALVES AND WATER HAMMER ARRESTORS SHALL BE PROVIDED AT RISERS. PIPE SIZING SHALL BE AS PER SECTION PC 604.
5. BUILDING WATER SERVICE, DISTRIBUTION PIPING AND FITTING MATERIAL SHALL BE AS DIRECTED IN SECTIONS PC 605.3, 605.4, 605.5 & 605.8.
6. INSTALLATION OF THE BUILDING WATER DISTRIBUTION SYSTEM SHALL BE AS PER SECTION PC 606.
7. SANITARY DRAINAGE PIPING AND MATERIALS SHALL BE AS PER SECTIONS PC 303 & PC 702.
8. PIPING JOINTS AND CONNECTIONS SHALL BE AS PER SECTIONS PC 605 & PC 705.
9. TRAPS SHALL BE AS PER SECTION PC 1002.
10. SIZING AND INSTALLATION OF DRAINAGE PIPING, FITTINGS AND OFFSETS SHALL BE AS PER CHAPTER 7 OF THE PLUMBING CODE.
11. VENT SIZING, GRADING, CONNECTIONS, LOCATIONS AND OFFSETS SHALL BE AS PER CHAPTER 9 OF THE PLUMBING CODE.
12. SPECIAL WASTES AND PIPING SHALL BE AS PER CHAPTER 8 OF THE PLUMBING CODE.
13. INDIRECT WASTES AND PIPING SHALL BE AS REQUIRED IN CHAPTER 8 OF THE PLUMBING CODE.
14. ALL PLUMBING DRAINAGE PIPING, INCLUDING ANY EQUIPMENT CONNECTED THERETO, SHALL BE SEISMICALLY RESTRAINED AS PER SECTION BC 1613 AND ASCE 7-2010.
15. CLEAN OUTS FOR SANITARY AND STORM DRAINAGE SHALL BE AS PER SECTION PC 708.
16. ALL PLUMBING WORK SHALL BE DONE BY OR UNDER THE DIRECT SUPERVISION OF A LICENSED MASTER PLUMBER AS PER THE NYC ADMINISTRATIVE CODE.
17. ALL SANITARY DRAINAGE PIPING SHALL BE PITCHED IN ACCORDANCE WITH SECTION PC 704.1.
23. ALL NEW AND ALTERED WATER SYSTEMS SHALL BE PURGED AND DISINFECTED AS PER SECTION PC 610.1.

PIPE MATERIAL SCHEDULE

PIPING SYSTEM	LOCATION	REQUIREMENT
SANITARY PIPING (WASTE & VENT)	INTERIOR (ABOVE GROUND AND HOUSE DRAIN LINES)	SERVICE WEIGHT CAST IRON NO-HUB WITH MECHANICAL STAINLESS STEEL COUPLINGS. GALVANIZED STEEL PIPE SCHEDULE 40, WITH THREADED DRAINAGE FITTINGS ALLOWED FOR 3" DIAMETER AND SMALLER.
DOMESTIC WATER (HOT & COLD)	INTERIOR (ABOVE GROUND)	COOPER TUBING, TYPE L (BLUE COLOR BAR), WITH WROUGHT COPPER SOLDER JOINT FITTINGS SUITABLE FOR SOFT SOLDERING. BRASS, SEAMLESS FRAWN PIPE, REGULAR WEIGHT WITH CAST BRONZE FITTING. CHROME PLATING FOR EXPOSED PIPING OR TRAPS IN KITCHEN AREA. GROOVE COPPER PIPE WITH VICTAULIC FITTING IS ALLOWED FOR 2" AND LARGER DIAMETER PIPING. COPPER TUBING FOR SHORT BRANCH CONNECTION TO PLUMBING FIXTURE.

INSTANTANEOUS HOT WATER HEATER SCHEDULE

SYMBOL	NO. REQUIRED	BASIS OF DESIGN MANUFACTURER AND MODEL NO.	TURN ON GPM	TERMPATURE RISE (°F) @ 1 GPM	LOAD (KW)	ELECTRIC CHARACTERISTIC	DIMENSIONS AND WEIGHT
EWH-1	1	EEMAX SPEX80T ML	0.2	55	8.0	277V/29A/1 PHASE	10.75" H X 5.25"W X 3" D AND 4 LBs

1. PROVIDE WITH 5 YEAR WARRANTY AND ASME APPROVED.
2. COORDINATE ALL POWER REQUIREMENTS AND CONTROL & CONTROL WIRING WITH THE ELECTRICAL CONTRACTOR.
3. FOR OPTIMUM PERFORMANCE, MOUNTING SHOULD BE LOCATED WITHIN 2 FEET OF FIXTURE.

EMERGENCY FIXTURE THERMOSTATIC MIXING VALVE

DESIGNATION	LOCATION	QTY.	VALVE FLOW (GPM)	PRESSURE DROP	INLETS/ OUTLET	TEMP. INLET	TEMPERED SETTING	BASIS OF DESIGN MODEL NO.	BASIS OF DESIGN MANUFACTURER	REMARKS
TMV-1	PENTHOUSE (MECHANICAL)	1	9.4	45 PSIG	1/2" NPT	180°F (MAX)	85°F	EFX8 S19-2000	BRADLEY	MEETS OR EXCEEDS ANSI Z358.1

EMERGENCY EYE WASH STATION

DESIGNATION	LOCATION	QTY.	VALVE FLOW (GPM)	MOUNTING	INLET	DRAIN	BASIS OF DESIGN MODEL NO.	BASIS OF DESIGN MANUFACTURER	REMARKS
EWS-1	PENTHOUSE (MECHANICAL)	1	5.1	PEDESTAL	1/2" NPT	1¼" NPT	S19-212B	BRADLEY	10¾" DIA. STAINLESS STEEL BOWL. COMPLIES WITH ANSI Z358.1

PLUMBING LIST OF DRAWINGS

DWG NO.	DESCRIPTION
P-001	PLUMBING SYMBOLS, ABBREVIATIONS, AND DRAWINGS LIST
P-100	PLUMBING TENTH FLOOR AND ROOF DEMOLITION PLAN
P-101	PLUMBING TENTH FLOOR AND ROOF CONSTRUCTION PLAN
P-401	PLUMBING DETAILS

ZONING AND BUILDING INFORMATION

APPLICABLE CODES AND REGULATIONS:

• ZONING REGULATIONS:	NYC ZONING REGULATIONS
• BUILDING CODE:	2022 NYC BUILDING CODE
• ENERGY CODE: CONSERVATION CODE	2020 NYC ENERGY

BUILDING DATA SUMMARY:

BLOCK:	2443
LOT:	94
ZONING DISTRICT:	C6-2
COMMUNITY BOARD:	BRONX 04
LOT AREA:	36,219 SF
BUILDING AREA:	233,647 SF
NO OF STORIES:	10 + CELLAR AND SUB CELLAR
BUILDING HEIGHT:	147'
OCCUPANCY CLASSIFICATION:	B, BUSINESS (2022 CODE)
CONSTRUCTION CLASSIFICATION:	I-B (NON COMBUSTIBLE)
FLOOD ZONE:	NOT APPLICABLE
DEP GREEN INFRASTRUCTURE:	CITYWIDE OR OPEN WATERS

PROJECT INFORMATION

THE 10 STORY BUILDING, LOCATED ON 198 E 161ST STREET IN BRONX, NY, IS OWNED BY THE NEW YORK CITY DEPARTMENT OF CITYWIDE ADMINISTRATIVE SERVICES (DCAS) AND HOUSES THE OFFICES OF THE BRONX DISTRICT ATTORNEY.

THE ROOF BULKHEAD CONSISTS OF THE ELEVATOR MACHINE ROOM, A MECHANICAL EQUIPMENT ROOM HOUSING TWO BOILERS, COMPRESSORS AND PUMPS. THE TWO COOLING TOWERS ARE LOCATED ON THE ROOF ON STEEL DUNNAGE, ENCLOSED ON ALL THREE SIDES BY A SCREEN ENCLOSURE.

THE PROJECT CONSISTS OF THE PHASED REPLACEMENT OF THE EXISTING 2 CELL OPEN COOLING TOWER WITH A NEW 2 CELL CLOSED LOOP COOLING TOWER AND ASSOCIATED PUMPS. THE CLOSED LOOP COOLING TOWER WILL REQUIRE ADDITIONAL ELECTRICAL SCOPE, NEW STRUCTURAL AND ARCHITECTURAL WORK TO SUPPORT THE NEW COOLING TOWER.

PLUMBING SUMMARY OF WORK

THE PLUMBING DRAWINGS PROVIDE REPLACEMENT OF DOMESTIC WATER SUPPLY IN SUPPORT OF THE COOLING TOWER REPLACEMENT FILED SEPARATELY.

1. REMOVE EXISTING MAKEUP COLD WATER SUPPLY AND DRAIN PIPING AND PROVIDE NEW BACKFLOW PREVENTER AND SUPPLY AND DRAINAGE PIPING FOR NEW COOLING TOWER EQUIPMENT.
2. RELOCATE EXISTING UTILITY SINK, PROVIDE NEW ELECTRIC WATER HEATER, AND EMERGENCY EYE WASH STATION WITH THERMOSTATIC VALVE IN PENTHOUSE TO ACCOMMODATE FOR NEW ELECTRICAL EQUIPMENT INSTALLATION.

RELATED APPLICATIONS

GENERAL CONSTRUCTION: X01141830-IA
STRUCTURAL: X01141830-S1
MECHANICAL: X01141830-S2

CONSTRUCTION PHASE NOTES:

1. BUILDING IS TO REMAIN OCCUPIED DURING THE COOLING TOWER REPLACEMENT. COORDINATE PHASING CONSTRUCTION WITH THE CORRESPONDING SCOPE OF WORK, AND BASE BID ACCORDINGLY.
2. REFER TO DRAWINGS G-100 AND G-101 FOR THE PROPOSED CONSTRUCTION PHASING PLANS.
3. CONSTRUCTION PHASING DIAGRAMS ARE INCLUDED FOR CLIENT COORDINATION AND TO FACILITATE COST ESTIMATING EFFORTS.
4. CONTRACTOR SHALL PRODUCE THEIR OWN CONSTRUCTION PHASING PLAN FOR REVIEW AND APPROVAL BY THE COMMISSIONER.

DOB APPROVAL STAMP

COOLING TOWER REPLACEMENT

BRONX DISTRICT ATTORNEY'S OFFICE
198 E 161ST STREET
NEW YORK, NEW YORK 10451

SPONSOR AGENCY:
DEPARTMENT OF CITYWIDE ADMINISTRATIVE SERVICES
MANHATTAN MUNICIPAL BUILDING
ONE CENTER STREET, 17 FLOOR SOUTH;
NEW YORK, NEW YORK 10007

MANAGING AGENCY:
DEPARTMENT OF DESIGN AND CONSTRUCTION
30-30 THOMSON AVENUE;
LONG ISLAND CITY, NEW YORK 10007

ARCHITECT:
NANDINEE PHOOKAN ARCHITECT
45 MAIN STREET SUITE #620
BROOKLYN NY 11201
P: 718.643.9500

STRUCTURAL ENGINEER:
LERA CONSULTING STRUCTURAL ENGINEERS
40 WALL STREET, FLOOR 23
NEW YORK, NY 10005
P: 212 750 9000

MEP ENGINEER:
DEWBERRY ENGINEERS
132 WEST 31ST STREET, SUITE 301
NEW YORK, NEW YORK 10001
P: 646 434 2822

PLUMBING ENGINEER:
AXON ENGINEERING SERVICES, LLC
222 OUTWATER LN, SUITE 3A
GARFIELD, NJ 07026
p: 917 677 2484

KEY PLAN:

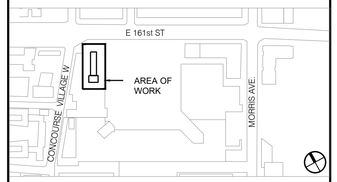

REVISIONS:

NUMBER	DESCRIPTION	DATE
	ISSUED FOR BID	01-27-2026

Department of Design and Construction

DIVISION OF PUBLIC BUILDINGS

CAPITAL PROJECT NUMBER:
PW77198CT

PROJECT
198 E 161ST STREET COOLING TOWER REPLACEMENT
198 E 161ST ST
BRONX, NY 10451

FOR THE:
Department of Citywide Administrative Services (DCAS)

DOB NOW APPLICATION: X01141830-S3

DRAWING TITLE:
PLUMBING SYMBOLS, ABBREVIATIONS, NOTES AND DRAWINGS LIST

SEAL & SIGNATURE

STATE OF NEW YORK
ALEXANDER ORLOV
091708
LICENSED PROFESSIONAL ENGINEER

DATE:	10 May, 2023
PROJECT NO:	22_01
DRAWN BY:	AB
CHECKED BY:	AO
DRAWING NUMBER:	P-001.00
CADO FILE No:	
	01 OF 04

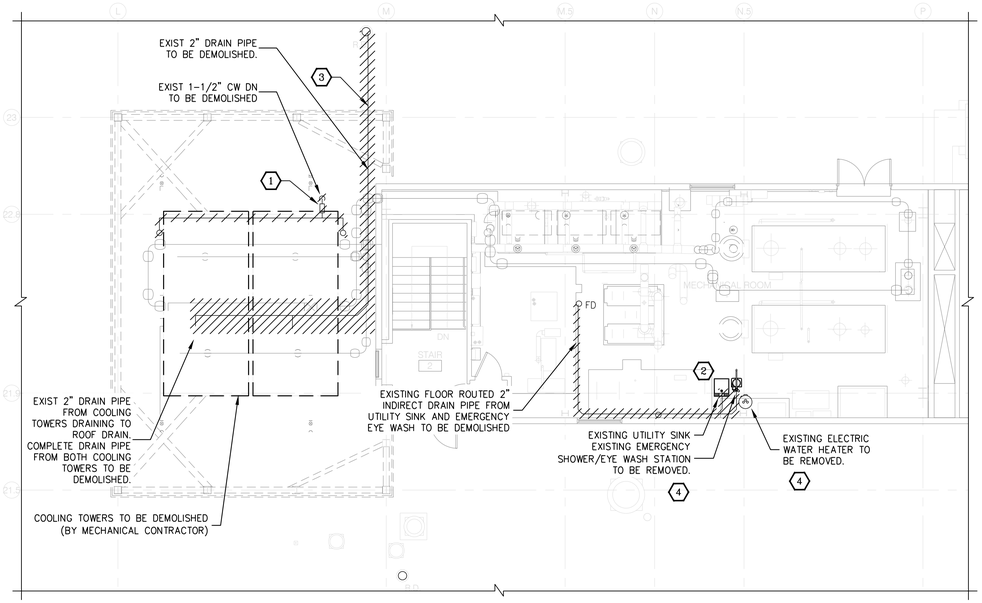

1 ROOF – PLUMBING DEMOLITION PLAN
SCALE: 1/8"=1'-0"

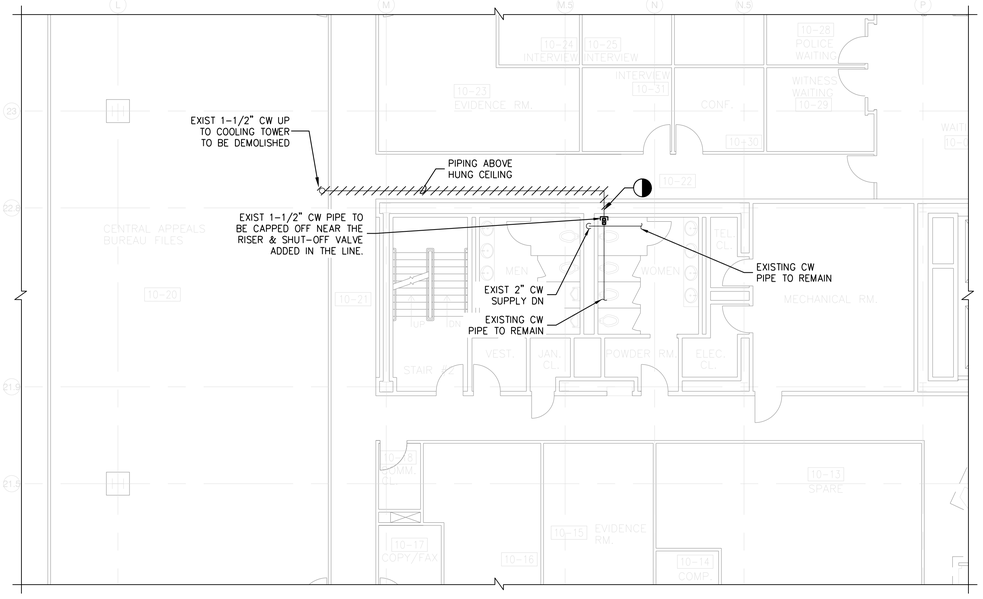

2 10TH FLOOR – PLUMBING DEMOLITION PLAN
SCALE: 1/8"=1'-0"

PLAN NOTES:

1. REFER TO DRAWING P-001 FOR PLUMBING SYMBOLS, ABBREVIATIONS AND NOTES.
2. PLUMBING CONTRACTOR IS RESPONSIBLE FOR PROVIDING THE MEANS OF SUPPORTING AND SECURING THE EXISTING PLUMBING PIPING THAT SHALL REMAIN WHILE IN CONSTRUCTION.

KEY NOTES:

1. EXISTING ELECTRICAL HEAT TRACE CONNECTION AND CW SHUT-OFF VALVE TO BE REPLACED. COORDINATE WORK WITH THE ELECTRICAL CONTRACTOR.
2. EXISTING FIXTURE TO BE RELOCATED. EXISTING CONNECTION PIPING TO BE REMOVED BACK TO WALL AND CAPPED OFF.
3. EXIST 2" DRAIN PIPE FROM COOLING TOWERS DRAINING TO ROOF DRAIN. COMPLETE DRAIN PIPE WITH ALL ASSOCIATED ACCESSORIES FROM BOTH COOLING TOWERS TO BE DEMOLISHED. CONTRACTOR TO VERIFY EXACT PIPE LENGTH IN FIELD AND DEMOLISH THE SAME COMPLETELY.
4. DISPOSAL OF EXISTING ELECTRIC WATER HEATER AND SHOWER/EYE WASH STATION SHALL BE AS DIRECTED BY THE OWNER.

DOB APPROVAL STAMP

COOLING TOWER REPLACEMENT

BRONX DISTRICT ATTORNEY'S OFFICE
198 E 161ST STREET
NEW YORK, NEW YORK 10451

SPONSOR AGENCY:
DEPARTMENT OF CITYWIDE ADMINISTRATIVE SERVICES
MANHATTAN MUNICIPAL BUILDING
ONE CENTER STREET, 17 FLOOR SOUTH;
NEW YORK, NEW YORK 10007

MANAGING AGENCY:
DEPARTMENT OF DESIGN AND CONSTRUCTION
30-30 THOMSON AVENUE;
LONG ISLAND CITY, NEW YORK 10007

ARCHITECT:
NANDINEE PHOOKAN ARCHITECT
45 MAIN STREET SUITE #620
BROOKLYN NY 11201
P: 718.643.9500

STRUCTURAL ENGINEER:
LERA CONSULTING STRUCTURAL ENGINEERS
40 WALL STREET, FLOOR 23
NEW YORK, NY 10005
P: 212 750 9000

MEP ENGINEER:
DEWBERRY ENGINEERS
132 WEST 31ST STREET, SUITE 301
NEW YORK, NEW YORK 10001
P: 646 434 2822

PLUMBING ENGINEER:
AXON ENGINEERING SERVICES, LLC
222 OUTWATER LN, SUITE 3A
GARFIELD, NJ 07026
p: 917 677 2484

KEY PLAN:

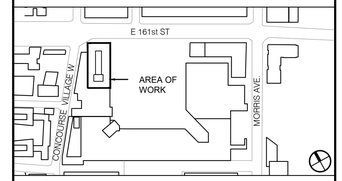

REVISIONS:

NUMBER	DESCRIPTION	DATE
	ISSUED FOR BID	01-27-2026

NYC DDC **Department of Design and Construction**

DIVISION OF PUBLIC BUILDINGS

CAPITAL PROJECT NUMBER:
PW77198CT

PROJECT
198 E 161ST STREET COOLING TOWER REPLACEMENT
198 E 161ST ST
BRONX, NY 10451

FOR THE:
Department of Citywide Administrative Services (DCAS)

DOB NOW APPLICATION: X01141830-S3

DRAWING TITLE:
PLUMBING TENTH FLOOR AND ROOF DEMOLITION PLAN

SEAL & SIGNATURE



DATE:	10 May, 2023
PROJECT NO:	22_01
DRAWN BY:	AB
CHECKED BY:	AO
DRAWING NUMBER:	P-100.00
CADO FILE No:	

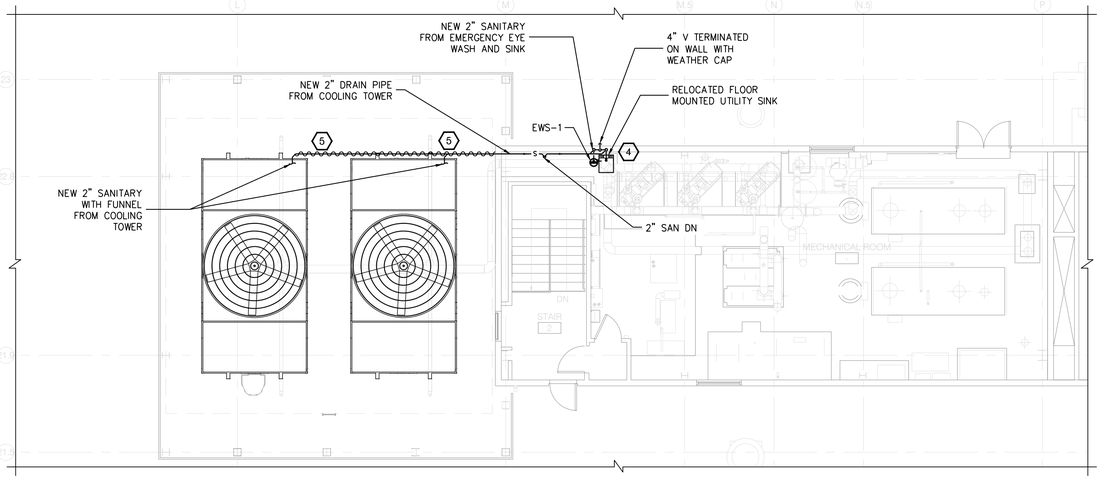

1 ROOF – PLUMBING SANITARY PLAN
SCALE: 1/8"=1'-0"

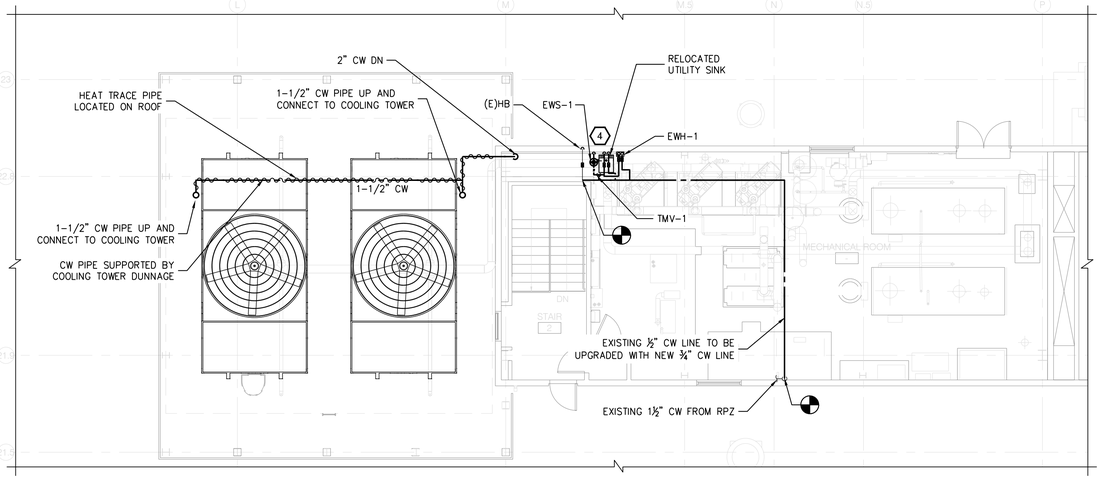

2 ROOF – PLUMBING DOMESTIC WATER PLAN
SCALE: 1/8"=1'-0"

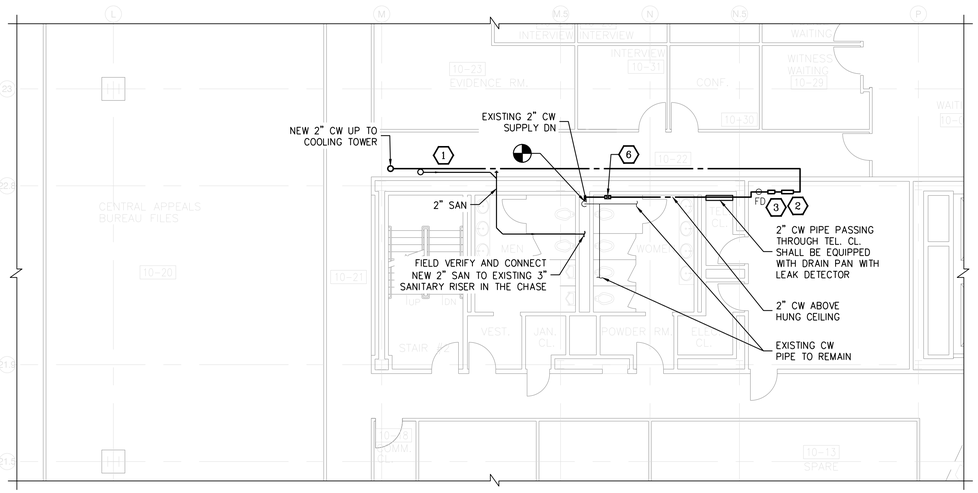

3 10TH FLOOR – PLUMBING PLAN
SCALE: 1/8"=1'-0"

PLAN NOTES:

1. REFER TO DRAWING P-001 FOR PLUMBING SYMBOLS, ABBREVIATIONS AND NOTES.

KEY NOTES:

1. PROVIDE NEW HORIZONTAL PIPING AS INDICATED. PRIOR TO INSTALLATION, COORDINATE EXACT ROUTING, CEILING MOUNTING CLEARANCES, AND WALL OPENINGS REQUIRED WITH THE GENERAL CONTRACTOR AND ARCHITECT.
2. PROVIDE AND INSTALL BFP – ZURN RPZA MODEL 975XL3 WITH AG-X AIR GAP ACCESSORY. EMERGENCY 1/2" SANITARY DISCHARGE FROM RPZA SHALL BE PIPED AND TERMINATED ABOVE THE FLOOR DRAIN.
3. PROVIDE AND INSTALL NEPTUNE MACH 10 ULTRASONIC WATER METER WITH TRICON/E3 PULSE/4-20MA TRANSMITTER WITH PROVISIONS OF DDC POINTS FOR BMS INTERFACE.
4. CONNECT RELOCATED FIXTURE WITH NEW HORIZONTAL PIPING AS INDICATED. PRIOR TO CONNECTION AND INSTALLATION; COORDINATE EXACT ROUTING, CONNECTION SIZES, MOUNTING CLEARANCES AND SERVICES COORDINATION ON SITE AS REQUIRED WITH THE GENERAL CONTRACTOR AND ARCHITECT.
5. NEW 2" SANITARY PIPE FROM COOLING TOWER, PIPE EXPOSED TO ATMOSPHERE IS HEAT TRACED.
6. NEW 2" CW PIPE TAPPED FROM THE EXISTING 2" CW RISER. CONTRACTOR SHALL VERIFY THE EXACT LOCATION IN FIELD.

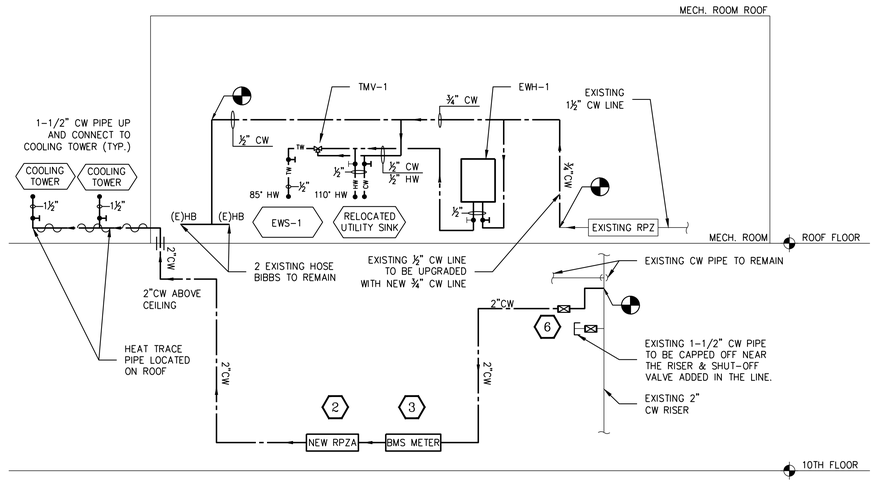

4 PARTIAL PLUMBING WATER SUPPLY RISER DIAGRAM
SCALE: N.T.S.

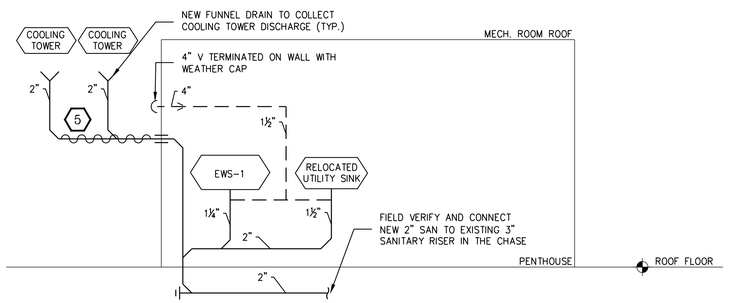

5 PARTIAL PLUMBING SANITARY RISER DIAGRAM
SCALE: N.T.S.

DOB APPROVAL STAMP

COOLING TOWER REPLACEMENT

BRONX DISTRICT ATTORNEY'S OFFICE
198 E 161ST STREET
NEW YORK, NEW YORK 10451

SPONSOR AGENCY:
DEPARTMENT OF CITYWIDE ADMINISTRATIVE SERVICES
MANHATTAN MUNICIPAL BUILDING
ONE CENTER STREET, 17 FLOOR SOUTH;
NEW YORK, NEW YORK 10007

MANAGING AGENCY:
DEPARTMENT OF DESIGN AND CONSTRUCTION
30-30 THOMSON AVENUE;
LONG ISLAND CITY, NEW YORK 10007

ARCHITECT:
NANDINEE PHOOKAN ARCHITECT
45 MAIN STREET SUITE #620
BROOKLYN NY 11201
P: 718.643.9500

STRUCTURAL ENGINEER:
LERA CONSULTING STRUCTURAL ENGINEERS
40 WALL STREET, FLOOR 23
NEW YORK, NY 10005
P: 212 750 9000

MEP ENGINEER:
DEWBERRY ENGINEERS
132 WEST 31ST STREET, SUITE 301
NEW YORK, NEW YORK 10001
P: 646 434 2822

PLUMBING ENGINEER:
AXON ENGINEERING SERVICES, LLC
222 OUTWATER LN, SUITE 3A
GARFIELD, NJ 07026
p: 917 677 2484

KEY PLAN:



REVISIONS:

NUMBER	DESCRIPTION	DATE
	ISSUED FOR BID	01-27-2026

NYC DDC Department of Design and Construction

DIVISION OF PUBLIC BUILDINGS

CAPITAL PROJECT NUMBER:
PW77198CT

PROJECT
198 E 161ST STREET COOLING TOWER REPLACEMENT
198 E 161ST ST
BRONX, NY 10451

FOR THE:
Department of Citywide Administrative Services (DCAS)

DOB NOW APPLICATION: X01141830-S3

DRAWING TITLE:
PLUMBING TENTH FLOOR AND ROOF CONSTRUCTION PLAN

SEAL & SIGNATURE



DATE:	10 May, 2023
PROJECT NO:	22_01
DRAWN BY:	AB
CHECKED BY:	AO
DRAWING NUMBER:	P-101.00
CADO FILE No:	03 OF 04

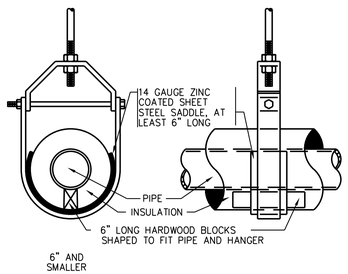

1 INSTALLATION DETAIL AT HANGER
SCALE: NTS

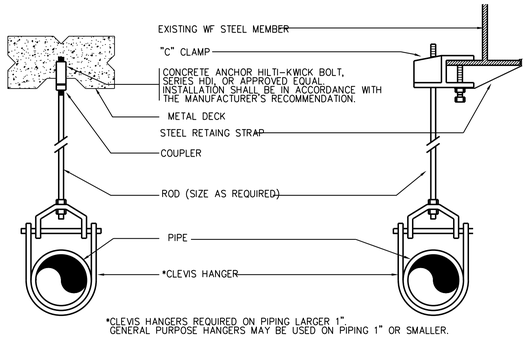

2 INSTALLATION DETAIL AT HANGER
SCALE: NTS

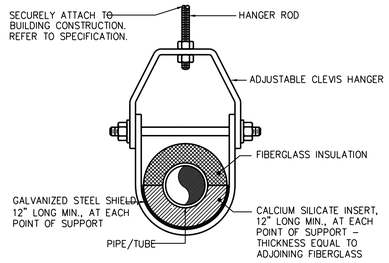

3 ADJUSTABLE CLEVIS PIPE SUPPORT
FOR INSULATED PIPING/TUBING LARGER THAN 1"
SCALE: NTS

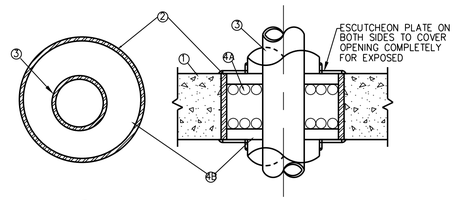

1. FLOOR OR WALL ASSEMBLY= MIN. 4-1/2" THICK CONCRETE
2. STEEL SLEEVE - NOM 14" DIAM. (OR SMALLER) SCH. 30 (OR HEAVIER) STEEL PIPE
3. STEEL PIPE - 8" DIAM. (OR SMALLER) SCH. 40 (OR HEAVIER) STEEL. ANNULAR SPACE SHALL BE MIN. 1/2" TO MAX. 4 13/18"
4. A) PACKING MATERIAL - NOM 1" DIAM. POLYURETHANE BACKER ROD
   B) NOM 1/2" THICKNESS NYC APPROVED FIRE STOPPING CAULKING FYRE - SHIELD BY TREMCO OR EQUIVELANT
5. PROVIDE UL-LISTED FIRE PENETRATION FIRE STOPPING ASSEMBLY, TESTED IN ACCORDANCE WITH UL-263 AND UL 1479.

4 PIPE SLEEVE THRU RATED WALL
SCALE: NTS

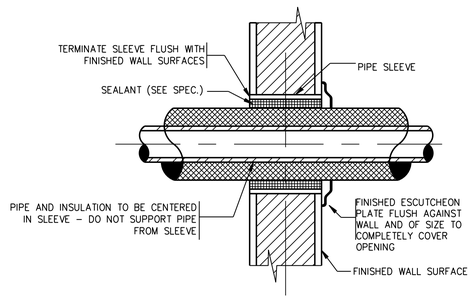

5 PIPING SLEEVE THRU INTERIOR WALL
SCALE: NTS

CONCEALED VALVES AND FITTINGS
- WRAP WITH 1 INCH THICK, 1 POUND DENSITY TO REQUIRED PIPE INSULATION THICKNESS.
- SECURE WITH WIRE OR TAPE.
- VAPOR SEAL COLD WATER AND STORM.

EXPOSED VALVES AND FITTINGS
- PREMOLDED FIRBERGLASS OR RADIAL MITERED PIPE INSULATION.
- SKIM COAT OF INSULATION CEMENT.
- COAT OF MASTIC.
- WRAP WITH FIBERLASS REINFORCING CLOTH.
- FINISH COAT OF MASTIC.
- OVERLAP 2 INCHES ON PIPE INSULATION.

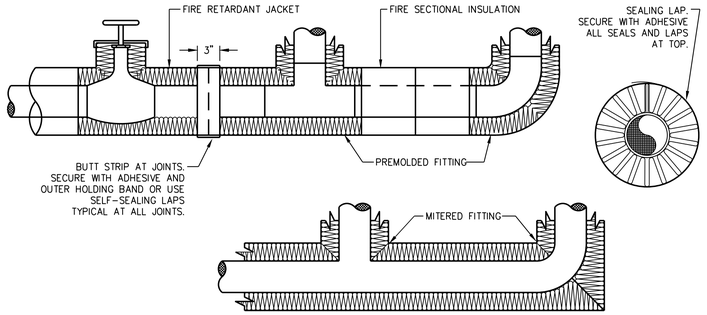

6 INSULATION OF PIPING VALVE AND FITTINGS DETAIL
SCALE: NTS

NOTE:
COORDINATE HOT WATER INSTALLATION W/ ALL LOCAL HEALTH CODE AND OTHER CODE REQUIREMENTS.

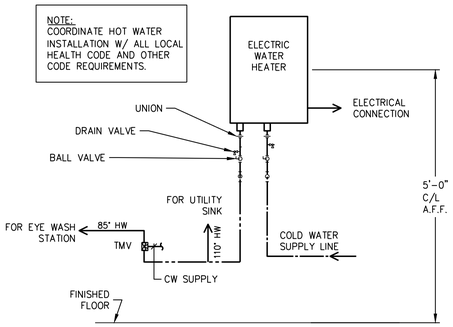

7 TANKLESS WATER HEATER PIPING DETAIL
SCALE: NTS

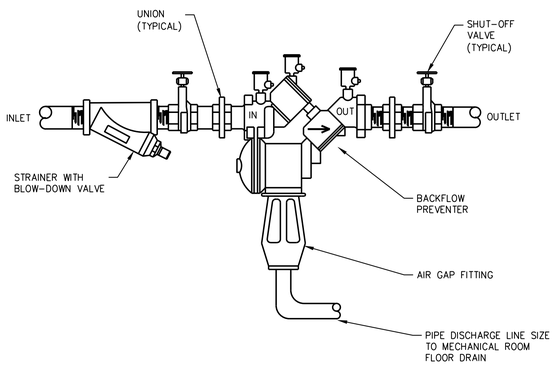

8 BACKFLOW PREVENTER (RPZA)
SCALE: NTS

NOTE:
HEAT TRACING SHALL BE PROVIDED BY THE PLUMBING CONTRACTORS, INSTALLED BY THE ELECTRICAL CONTRACTOR, AND CONNECTED TO THE BMS SYSTEM BY THE MECHANICAL CONTRACTOR.

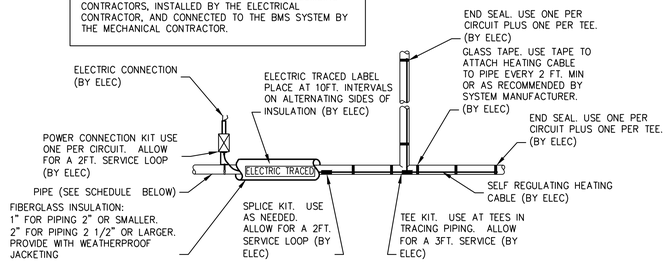

HEAT TRACING SCHEDULE

SERVICE (LOCATION)	PIPE DIAMETER (IN.)	INSULATION THICKNESS (IN.)	MIN MAINT. TEMP. (°F)	HEAT LOSS (WATTS/FT.)
COLD WATER (EXPOSED ON ROOF)	< 2"	1"	40	2
COLD WATER (EXPOSED ON ROOF)	2" - 4"	2"	40	4

9 HEAT TRACING DETAIL
SCALE: NTS

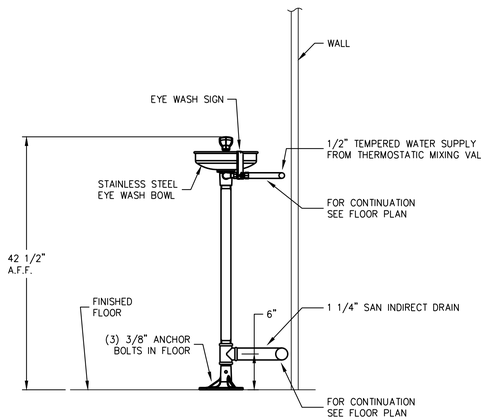

NOTE:
1. EMERGENCY EYEWASH STATION SHALL CONFORM TO ANSI Z358.1.

10 NEW EMERGENCY EYE WASH UNIT DETAIL
SCALE: NTS

DOB APPROVAL STAMP

COOLING TOWER REPLACEMENT

BRONX DISTRICT ATTORNEY'S OFFICE
198 E 161ST STREET
NEW YORK, NEW YORK 10451

SPONSOR AGENCY:
DEPARTMENT OF CITYWIDE ADMINISTRATIVE SERVICES
MANHATTAN MUNICIPAL BUILDING
ONE CENTER STREET, 17 FLOOR SOUTH;
NEW YORK, NEW YORK 10007

MANAGING AGENCY:
DEPARTMENT OF DESIGN AND CONSTRUCTION
30-30 THOMSON AVENUE;
LONG ISLAND CITY, NEW YORK 10007

ARCHITECT:
NANDINEE PHOOKAN ARCHITECT
45 MAIN STREET SUITE #620
BROOKLYN NY 11201
P: 718.643.9500

STRUCTURAL ENGINEER:
LERA CONSULTING STRUCTURAL ENGINEERS
40 WALL STREET, FLOOR 23
NEW YORK, NY 10005
P: 212 750 9000

MEP ENGINEER:
DEWBERRY ENGINEERS
132 WEST 31ST STREET, SUITE 301
NEW YORK, NEW YORK 10001
P: 646 434 2822

PLUMBING ENGINEER:
AXON ENGINEERING SERVICES, LLC
222 OUTWATER LN, SUITE 3A
GARFIELD, NJ 07026
p: 917 677 2484

KEY PLAN:

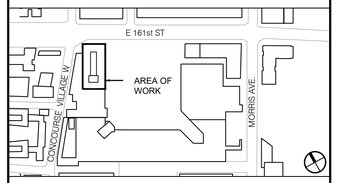

REVISIONS:

NUMBER	DESCRIPTION	DATE
	ISSUED FOR BID	01-27-2026

Department of Design and Construction

DIVISION OF PUBLIC BUILDINGS

CAPITAL PROJECT NUMBER:
PW77198CT

PROJECT
198 E 161ST STREET COOLING TOWER REPLACEMENT
198 E 161ST ST
BRONX, NY 10451

FOR THE:
Department of Citywide Administrative Services (DCAS)

DOB NOW APPLICATION: X01141830-S3

DRAWING TITLE:
PLUMBING DETAILS

SEAL & SIGNATURE

STATE OF NEW YORK · ALEXANDER ORLOV · 091708 · LICENSED PROFESSIONAL ENGINEER

DATE:	10 May, 2023
PROJECT NO:	22_01
DRAWN BY:	AB
CHECKED BY:	AO
DRAWING NUMBER:	P-401.00
CADO FILE No:	
	04 OF 04

ELECTRICAL GENERAL NOTES

1. ALL WORK SHALL BE PERFORMED IN STRICT ACCORDANCE WITH THE 2008 NATIONAL ELECTRICAL CODE, THE LATEST NEW YORK CITY ELECTRICAL CODE AND ALL GOVERNING LOCAL CODES, LAWS AND REGULATIONS.
2. ELECTRICAL CONTRACTOR SHALL VISIT THE SITE AND BECOME FAMILIAR WITH ALL EXISTING CONDITIONS THAT MAY AFFECT HIS WORK AND SHALL NOT BE ENTITLED TO ANY ADDITIONAL COMPENSATION FOR HIS FAILURE TO DO SO.
3. CONTRACTOR SHALL, IN A WORKMANLIKE MANNER, PROVIDE A COMPLETE OPERABLE SYSTEM.
4. MINIMUM SIZE OF RACEWAY FOR POWER AND LIGHTING CIRCUITS SHALL BE 3/4" EMT CONDUIT, UON. PROVIDE FLEXIBLE SEALTITE CONDUITS FOR FINAL CONNECTIONS TO MOTORS.
5. MINIMUM WIRE SIZE FOR POWER AND LIGHTING CIRCUITS SHALL BE #12 AWG, TYPE THWN/THHN, UON.
6. UNLESS OTHERWISE NOTED, PULL AND JUNCTION BOXES WHERE INDICATED ON DRAWINGS, SHALL BE CONSIDERED SHOWN AT THEIR APPROXIMATE LOCATION. THE CONTRACTOR SHALL LOCATE THEM AS FIELD CONDITIONS DICTATE. ADDITIONAL PULL AND JUNCTION BOXES NOT SHOWN ON DRAWINGS SHALL BE PROVIDED WHERE REQUIRED BY APPLICABLE CODE PROVISIONS OR FIELD CONDITIONS.
7. EXPOSED NON-CURRENT CARRYING METAL PARTS OF ELECTRICAL EQUIPMENT & RACEWAYS SHALL BE GROUNDED. THE CONTRACTOR SHALL ENSURE CONTINUITY OF THE GROUNDING CIRCUIT THROUGH THIS GROUNDING CONDUCTOR FROM THE SUPPLYING PANELBOARD GROUNDING BUS TO THE LOAD GROUND TERMINAL. THE ELECTRICAL SYSTEM SHALL BE GROUNDED IN ACCORDANCE WITH ARTICLE 250 OF THE NATIONAL ELECTRICAL CODE.
8. ARCHITECTURAL FEATURES AS WELL AS MECHANICAL EQUIPMENT SHOWN ON ELECTRICAL DRAWINGS ARE FOR BACKGROUND INFORMATION ONLY. REFER TO ARCHITECTURAL AND STRUCTURAL DRAWINGS FOR ACTUAL BUILDING CONSTRUCTION OF WALLS AND CURBS AND TO MECHANICAL DRAWINGS FOR ACCURATE MECHANICAL EQUIPMENT LOCATIONS.
9. ALL WORK SHOWN ON THE DRAWINGS NOT SPECIFICALLY CALLED OUT AS EXISTING SHALL BE CONSIDERED WORK TO BE PERFORMED UNDER THIS CONTRACT.
10. ALL CONDUIT RUNS IN THIS CONTRACT ARE DIAGRAMMATIC. LOCATION OF EQUIPMENT AND RUNS MAY VARY DUE TO PHYSICAL CONDITIONS. THE WORK SHALL INCLUDE ALL REQUIRED OUTLET & JUNCTION BOXES TO COMPLETE THE CONDUIT INSTALLATION. CONTRACTOR SHALL INSTALL EQUIPMENT AND CONDUITS IN A MANNER TO MINIMIZE ANY INTERFERENCE WITH OTHER CONTRACTS OR TRADES.
11. CONTRACTOR IS RESPONSIBLE FOR ALL LUG KITS/COPPER BUS DETAILS AS REQUIRED FOR OVER SIZED FEEDERS. LUGS SHALL BE COPPER-PRESSURE PLATE TYPE, UP TO NO. 6 & COMPRESSION TYPE FOR LARGER SIZE CONDUCTOR.
12. CONTRACTOR TO COORDINATE ALL NEW WORK WITH EXISTING EQUIPMENT IN THE FIELD.
13. IT SHALL BE THE CONTRACTOR'S RESPONSIBILITY TO CONDUCT HIS OWN SURVEYING AND TESTING TO LOCATE EXISTING CONDUITS, FEEDERS, ETC. AND TAKE EXTREME CARE DURING HIS SURVEY SO AS NOT TO DAMAGE OR DISTURB EXISTING SYSTEMS.
14. THIS CONTRACTOR SHALL COORDINATE HIS WORK WITH OTHER TRADES.
15. THE CONTRACTOR SHALL FURNISH AND INSTALL ALL ACCESS DOORS REQUIRED FOR HIS WORK. COORDINATE WITH OTHER TRADES.
16. PERFORM ALL CHASING AND PATCHING OF FLOOR/WALLS/ COLUMNS ETC., AS REQUIRED FOR INSTALLATION AND WIRING OF EQUIPMENT.
17. CONTRACTOR SHALL INSTALL ALL WIRING AND CONDUIT, JUNCTION/PULL BOXES SURFACE MOUNTED ON WALL.
18. ALL WORK SHOWN ON THIS SET OF CONTRACT DOCUMENTS SHALL BE PERFORMED IN PHASE I UNLESS OTHERWISE INDICATED.
19. DISTRIBUTION TYPE 'DB' PANELBOARDS SHALL BE PROVIDED ADJUSTABLE ELECTRONIC TRIP DEVICES WITH INDIVIDUALLY ADJUSTABLE GROUND FAULT, LONG TIME, SHORT TIME, AND INSTANTANEOUS TRIP FUNCTIONS. CIRCUIT BREAKERS 125 AMPS AND HIGHER SHALL INCLUDE LSI TRIP FEATURES AND 100 AMPS AND LESS SHALL HAVE ADJUSTABLE INSTANTANEOUS TRIP (LI) FEATURES AS NOTED.

ELECTRICAL DEMOLITION NOTES

1. DISCONNECT AND REMOVE BACK TO PANEL ALL ELECTRICAL CONDUITS, WIRING AND EQUIPMENT FROM COOLING TOWERS AND ALL OTHER MECHANICAL EQUIPMENT TO BE REMOVED UNDER THIS CONTRACT. SEE MECHANICAL DEMOLITION DRAWINGS FOR EQUIPMENTS TO BE REMOVED.
2. THE ELECTRICAL DEMOLITION DRAWINGS SHALL BE CONSIDERED ONLY AS A GUIDE AND ARE NOT INTENDED TO SHOW EVERY SINGLE ITEM OF WORK REQUIRED. ACTUAL FIELD CONDITIONS WILL DETERMINE THE PRECISE WORK TO BE DONE. SHOULD ANY QUESTION ARISE AS TO WHETHER OR NOT ANY CONDUIT, WIRING, EQUIPMENT OR OTHER ITEM SHOULD BE REMOVED, OR REMAIN AS PRESENTLY INSTALLED, THE CONTRACTOR SHALL REQUEST, IN WRITING, CLARIFICATION FROM THE ENGINEER. SINCE THE MECHANICAL DRAWINGS INDICATE THE EXTENT OF THE SCOPE OF WORK, NO EXTRA CHARGES WILL BE ALLOWED FOR ANY REMOVALS NECESSARY FOR COMPLETION OF THE WORK UNDER THIS PROJECT.
3. BEFORE PROCEEDING WITH ANY WORK IN OCCUPIED AREAS, THE CONTRACTOR SHALL OBTAIN PERMISSION FROM THE OWNER TO ENTER SUCH AREAS. THE CONTRACTOR IS OBLIGED TO PERFORM HIS WORK ONLY AT THE TIME OR TIMES DESIGNATED BY THE OWNER. THERE WILL BE NO ADDITIONAL COMPENSATION FOR THE WORK PERFORMED AFTER HOURS OR ON OFF-DAYS WITHOUT PRIOR WRITTEN APPROVAL.
4. DEMOLITION AND OTHER WORK WHICH CREATES DIRT AND/OR DISTURBING NOISE, MUST BE PERFORMED AFTER 5 PM OR ON WEEKENDS. THE DELIVERY, HANDLING AND INSTALLING OF MATERIALS, EQUIPMENT AND DEBRIS REMOVALS MUST BE ARRANGED TO AVOID ANY INCONVENIENCE AND ANNOYANCE. CLEANING MUST BE CONTROLLED TO PREVENT DIRT AND DUST FROM INFILTRATING INTO ADJACENT AREAS. WORK SHALL BE PERFORMED ONLY DURING TIMES SPECIFICALLY APPROVED BY THE BUILDING MANAGER.
5. WHERE CONDUITS AND EQUIPMENT SHALL BE REMOVED, CONTRACTOR SHALL REMOVE ASSOCIATED SUPPORTS, HANGERS AND APPURTENANCES AS WELL.
6. ELECTRICAL CONTRACTOR SHALL SURVEY ALL DEMOLITION AREAS PRIOR TO REMOVALS AND COORDINATE WITH INSTALLATION OF NEW WORK, SO THAT THERE WILL BE NO EXTRAS DURING THE COURSE OF THE DEMOLITION PHASE.
7. EXISTING CONDUIT WHICH IS EMBEDDED IN FLOORS OR WALLS NOT BEING DEMOLISHED AND WHICH IS NO LONGER USED SHALL BE CUT OFF AT THE FLOOR OR WALL SURFACE.
8. EXISTING CONDUIT, WIRE, EQUIPMENT OR COMPONENTS WHICH ARE TO REMAIN AND WHICH ARE DISTURBED OR DAMAGED DURING CONSTRUCTION SHALL BE REPLACED AND REPAIRED WITH APPROPRIATE NEW MATERIALS, EQUIPMENT OR COMPONENTS AT NO EXTRA COST.
9. ELECTRICAL CONTRACTOR SHALL TRACE, IDENTIFY AND LABEL ALL EXISTING CIRCUITS AND CONDUITS BACK TO SOURCE PRIOR TO REMOVAL. UPON COMPLETION OF THIS WORK NOTIFY THE ENGINEER OF SPARE CIRCUITS FOR REUSE AND MAKE AN ARRANGEMENT FOR AN ENGINEER'S INSPECTION PRIOR TO ANY BRANCH CIRCUIT REMOVAL.
10. ELECTRICAL CONTRACTOR SHALL REMOVE ALL INACTIVE POWER WIRING, CONDUIT AND FEEDERS ASSOCIATED WITH THE EQUIPMENT REMOVED.

WIRING DEVICES

SYMBOL	DESCRIPTION
	ANNOTATION FOR RECEPTACLE WIRING DEVICES: - GFI DENOTES GROUND FAULT TYPE - SS DENOTES SURGE SUPPRESSION TYPE - IG DENOTES ISOLATED GROUND TYPE - EM EMERGENCY TYPE
GFI	DUPLEX RECEPTACLE WALL MOUNTED 20A, 125V, 2P, 3W GROUNDING

MISCELLANEOUS

SYMBOL	DESCRIPTION
P380D	FEEDER SIZE, SEE FEEDER SCHEDULE
# #	REFERENCE NOTE
A E-3	DIGITAL REFERENCE: - DETAIL DESIGNATION - SHEET NUMBER REFERENCE
EF 1	EQUIPMENT REFERENCE. COORDINATE EQUIPMENT WITH MECHANICAL/PLUMBING TRADES. SEE MECHANICAL/PLUMBING DRAWINGS FOR LOCATIONS
X X	INDICATES SECTION NUMBER INDICATES ON WHICH DRAWING SECTION APPEARS
X	INDICATES REVISION & NUMBER
	CONNECT NEW TO EXISTING
	POINT OF DISCONNECTION

POWER

SYMBOL	DESCRIPTION
4X	UNFUSED DISCONNECT SWITCH WITH RATING => UPSTEAM PROTECTIVE DEVICE - '4x' DENOTES NEMA ENCLOSURE IF INDICATED
4X F 200	FUSED DISCONNECT SWITCH - NUMERICAL DENOTES FUSE SIZE - '4x' DENOTES NEMA ENCLOSURE IF INDICATED
4X CB 225	ENCLOSED CIRCUIT BREAKER - NUMERICAL DENOTES TRIP SIZE - '4x' DENOTES NEMA ENCLOSURE IF INDICATED
4X	MOTOR CONTROLLER: - '4x' DENOTES NEMA ENCLOSURE IF INDICATED
4X VFD	VARIABLE FREQUENCY DRIVE CONTROLLER - '4x' DENOTES NEMA ENCLOSURE IF INDICATED WITH FUSED DISCONNECTED
4X 400	COMBINATION DISCONNECT SWITCH/CONTROLER - NUMERICAL DENOTES FUSE/TRIP SIZE - '4x' DENOTES NEMA ENCLOSURE IF INDICATED
4X VFD	COMBINATION DISCONNECT SWITCH/CONTROLLER VARIABLE FREQUENCY DRIVE - '4x' DENOTES NEMA ENCLOSURE IF INDICATED
$\$_M^{TP}$	MANUAL MOTOR STARTER WITH THERMAL OVERLOAD AND PILOT LIGHT
	FLEXIBLE CONNECTION
PB	PULLBOX
	SURFACE MOUNTED LTG/APPLIANCE PANELBOARD
	SURFACE MOUNTED POWER PANELBOARD
	EXISTING SURFACE MOUNTED ELECTRICAL PANEL
HT	HEAT TRACE POWER CONNECTION KIT
LP-3A/ 1,3,5	HOMERUN TO PANELBOARD "LP-3A": - NUMERALS DENOTE CIRCUIT NUMBERS - DESIGNATION DENOTES CIRCUIT NUMBERS, 3#12 + 1#10N-3/4", U.O.N.
	NEW CONDUIT OR EQUIPMENT
	CONDUIT TURNING UP
	CONDUIT TURNING DOWN
	CONDUIT CAPPED
	EXISTING CONDUIT AND WIRING TO BE REMOVED
	EXISTING CONDUIT AND WIRING TO REMAIN

SINGLE LINE DIAGRAM

SYMBOL	DESCRIPTION
PANEL	PANELBOARD, SEE PANEL SCHEDULE FOR RATING
	FEEDER
LSI TRIP	MOLDED CASE CIRCUIT BREAKER: - "TEXT' DENOTES CB ACCESSORIES ST, ET. GFP, EO, LSI TRIP FUNCTIONS - NUMERICAL DENOTES TRIP SIZE
GFP TRIP	LOW VOLTAGE FUSE/SWITCH - "TEXT' DENOTES FUSE ACCESSORIES ST, GFR, EO, LO, LOCK OUT PROVISIONS - NUMERICAL DENOTES FUSE SIZE
GFP TRIP	LOW VOLTAGE SWITCH - "TEXT' DENOTES FUSE ACCESSORIES - NUMERICAL DENOTES FUSE SIZE
SPARE 200	SPARE SWITCH IN DISTRIBUTION EQUIPMENT
SPACE 255	SPACE IN DISTRIBUTION EQUIPMENT
ST 225	ENCLOSED CIRCUIT BREAKER - "TEXT' DENOTES CB ACCESSORIES - NUMERICAL DENOTES TRIP SIZE
ST 225	ENCLOSED SAFETY DISCONNECT SWITCH - "TEXT' DENOTES FUSE ACCESSORIES - NUMERICAL DENOTES SWITCH SIZE
ST 400	ENCLOSED FUSED DISCONNECT SWITCH - "TEXT' DENOTES FUSE ACCESSORIES - NUMERICAL DENOTES SWITCH SIZE
M	MOTOR

NOTE:

NOT ALL SYMBOLS AND ABBREVIATIONS ARE USED ON THIS PROJECT.

ABBREVIATIONS

A OR AMP	AMPERE
AC	ALTERNATING CURRENT
AIC	AMPS INTERRUPTING CAPACITY
AFF	ABOVE FINISHED FLOOR
AG	ABOVE GROUND/GRADE
AS/AF	AMP SWITCH/AMP FUSE
AF/AT	AMP FRAME/AMP TRIP
ATS	AUTOMATIC TRANSFER SWITCH
AWG	AMERICAN WIRE GAUGE
BLDG	BUILDING
C	CONDUIT
CB	CIRCUIT BREAKER
CKT	CIRCUIT
CT	CURRENT TRANSFORMER
DC	DIRECT CURRENT
DISC	DISCONNECT
DP	DISTRIBUTION PANEL
DWG	DRAWING
E OR (E)	EXISTING
EA	EACH
EM	EMERGENCY
EMH	ELECTRICAL MANHOLE
EMT	ELECTRICAL METALLIC TUBING
FL	FLOOR
FLA	FULL LOAD AMPS
FSD	FIRE SMOKE DAMPER
ISC	SHORT CIRCUIT CURRENT
JB, J	JUNCTION BOX
KVA	KILOVOLT AMPERE
KW	KILOWATT
LCP	LIGHTING CONTROL PANEL
LTG	LIGHTING
LV	LOW VOLTAGE
LVR	LOW VOLTAGE RELAY
MCB	MAIN CIRCUIT BREAKER
MCC	MOTOR CONTROL CENTER
PH	PHASE
ST	SHUNT TRIP
SW	SWITCH
SWBD	SWITCHBOARD
SWGR	SWITCHGEAR
TYP	TYPICAL
UPS	UNINTERRUPTIBLE POWER SUPPLY
UL	UNDERWRITERS LABORATORY
UON	UNLESS OTHERWISE NOTED
UV	UNIT VENTILATOR
V	VOLTS
VA	VOLT-AMPERES
W	WATT
WP	WEATHERPROOF
XFMR	TRANSFORMER
RVS	COMBINATION REDUCED VOLTAGE SOFT STARTER W/FUSES

ELECTRICAL DRAWINGS LIST

E-001	ELECTRICAL GENERAL NOTES, SYMBOLS AND ABBREVIATIONS
ED-101	ELECTRICAL COOLING TOWER DEMOLITION PLAN
E-101	ELECTRICAL COOLING TOWER NEW PLAN
E-201	ELECTRICAL COOLING TOWER PART PLANS
E-202	ELECTRICAL COOLING TOWER PART PLANS
E-301	ELECTRICAL SINGLE LINE DIAGRAM
E-401	ELECTRICAL PANEL SCHEDULES

CONSTRUCTION PHASE NOTES:

1. BUILDING REMAINS OCCUPIED DURING THE COOLING TOWER PROJECT REPLACEMENT. COORDINATE PHASING CONSTRUCTION WITH THE CORRESPONDING SCOPE OF WORK AND BASE BID ACCORDINGLY.
2. REFER TO DRAWINGS G-100 AND G-101 FOR THE PROPOSED CONSTRUCTION PHASING PLANS. CONSTRUCTION PHASING PLANS AND DIAGRAM ARE DEVELOPED FOR COORDINATION WITH THE CLIENT AND TO FACILITATE COST ESTIMATE EFFORTS.
3. CONTRACTOR SHALL DEVELOP ITS OWN CONSTRUCTION PHASING PLAN FOR REVIEW AND APPROVAL BY THE COMMISSIONER AND FACILITY. PROVIDE ALL REQUIRED ELECTRICAL EQUIPMENT AND POWER AS REQUIRED TO MAINTAIN POWER TO THE OCCUPIED BUILDING AND EXISTING EQUIPMENT.
4. COORDINATE INSTALLATION WORK OF NEW DISTRIBUTION PANELBOARD 'PP-AC' UNDER SEPARATE CONTRACT - 'BRONX DA DATA CENTER HVAC UPGRADES' (BY OTHERS). PROVIDE REQUIRED CABLE TERMINATION AND BREAKER WITHIN NEW DISTRIBUTION PANELBOARD.

DOB APPROVAL STAMP

STATE OF NEW YORK
JESSE KEMERSON
105638
LICENSED PROFESSIONAL ENGINEER

Jesse C Kemerson
2026.02.02 10:16:45-05'00'

COOLING TOWER REPLACEMENT

BRONX DISTRICT ATTORNEY'S OFFICE
198 E 161ST STREET
NEW YORK, NEW YORK 10451

SPONSOR AGENCY:
DEPARTMENT OF CITYWIDE ADMINISTRATIVE SERVICES
MANHATTAN MUNICIPAL BUILDING
ONE CENTER STREET, 17 FLOOR SOUTH;
NEW YORK, NEW YORK 10007

MANAGING AGENCY:
DEPARTMENT OF DESIGN AND CONSTRUCTION
30-30 THOMSON AVENUE;
LONG ISLAND CITY, NEW YORK 10007

ARCHITECT:
NANDINEE PHOOKAN ARCHITECT
45 MAIN STREET SUITE #620
BROOKLYN NY 11201
P: 718 643 9500

STRUCTURAL ENGINEER:
LERA CONSULTING STRUCTURAL ENGINEERS
40 WALL STREET, FLOOR 23
NEW YORK, NY 10005
P: 212 750 9000

MEP ENGINEER:
DEWBERRY ENGINEERS
132 WEST 31ST STREET, SUITE 301
NEW YORK, NEW YORK 10001
P: 646 434 2822

PLUMBING ENGINEER:
AXON ENGINEERING SERVICES, LLC
222 OUTWATER LN, SUITE 3A
GARFIELD, NJ 07026
p: 917 677 2484

KEY PLAN:

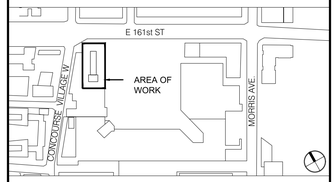

REVISIONS:

NUMBER	DESCRIPTION	DATE
	ISSUED FOR BID	01-27-2026
	ADDENDUM #2	04-29-2026
	ADDENDUM #4	05-19-2026

Department of Design and Construction

DIVISION OF PUBLIC BUILDINGS

CAPITAL PROJECT NUMBER:
PW77198CT

PROJECT
198 E 161ST STREET COOLING TOWER REPLACEMENT
198 E 161ST ST
BRONX, NY 10451

FOR THE:
Department of Citywide Administrative Services (DCAS)

DOB NOW APPLICATION: X01141830-I1

DRAWING TITLE:
ELECTRICAL GENERAL NOTES, SYMBOLS AND ABBREVIATIONS

SEAL & SIGNATURE

DATE:	02 May, 2025
PROJECT NO:	22_01
DRAWN BY:	MR
CHECKED BY:	NS
DRAWING NUMBER:	E-001.00
CADO FILE No:	01 OF 07

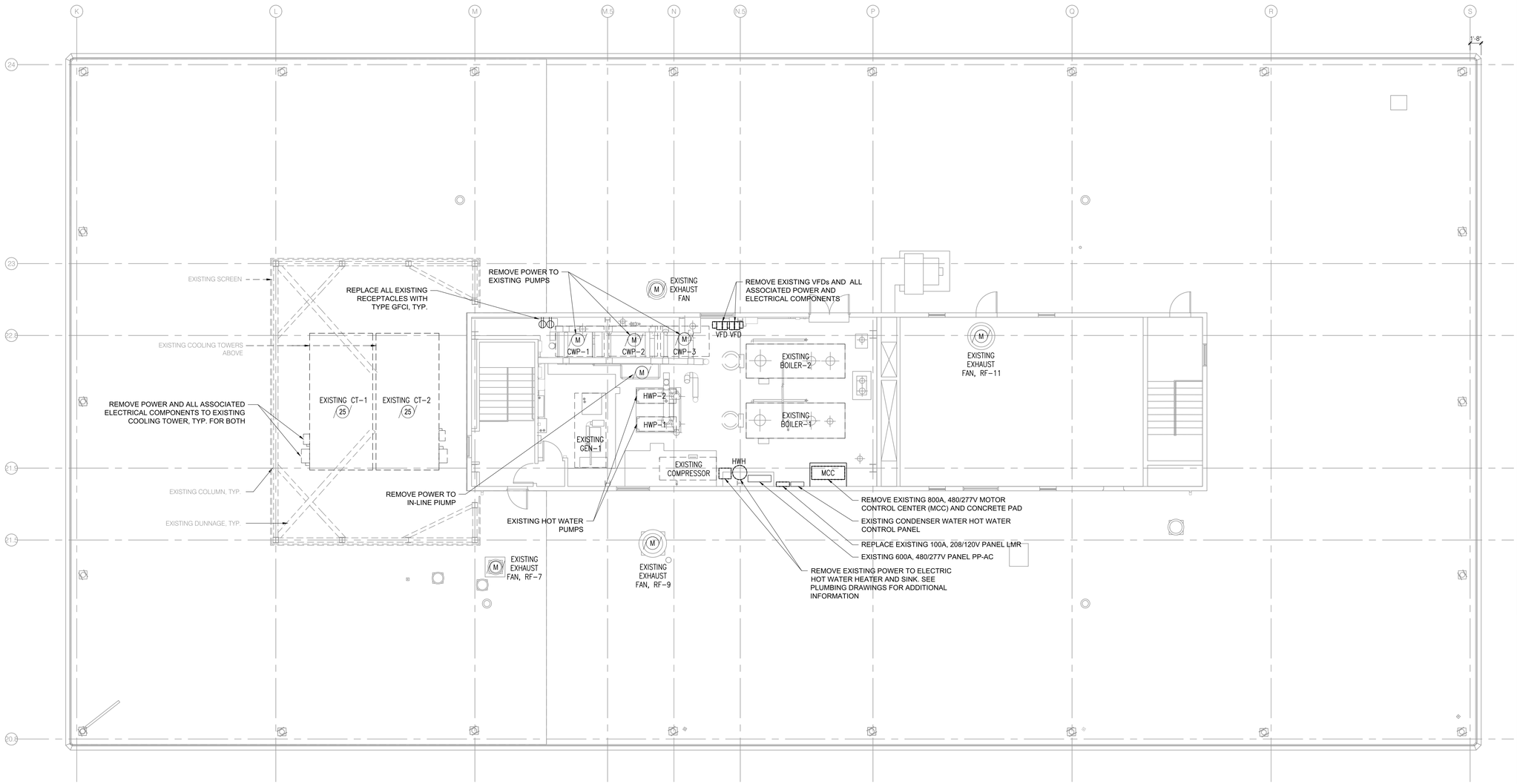

NOTES

1. DISCONNECT AND REMOVE EXISTING FEEDERS AND CONDUIT TO EQUIPMENT SCHEDULED TO BE REMOVED BACK TO SOURCE. COORDINATE WORK WITH MECHANICAL CONTRACTOR AND OTHER TRADES. REMOVE HANGERS, SUPPORTS, INSULATION AND ALL OTHER APPURTENANCES.
2. ELECTRICAL CONTRACTOR SHALL TRACE AND IDENTITY ALL EXISTING FEEDERS AND PANELBOARD BRANCH CIRCUITS.
3. CONTRACTOR SHALL EXAMINE EXISTING CONDITIONS AND SHALL PERFORM ALL REQUIRED DEMOLITION AND RELOCATION WORK AS WELL AS PROVISION OF ALL NEW ELECTRICAL EQUIPMENT, WIRING, ETC. AS REQUIRED FOR FULL FUNCTIONAL SYSTEM.
4. ALL CIRCUITS AFFECTED BY THE DEMOLITION WORK SHALL BE DE-ENERGIZED AT THEIR SOURCE PRIOR TO BEGINNING ANY DEMOLITION WORK IN THE BUILDING.
5. REMOVE EXISTING MOTOR CONTROL CENTER (MCC), CONDUITS AND CONCRETE PAD. REMAINING CIRCUITS AFFECTED BY THE MCC REMOVAL WORK SHALL BE RECONNECTED TO NEW PANELBOARD.
6. ALL ELECTRICAL EQUIPMENT INDICATED ON THIS DRAWING IS EXISTING TO REMAIN, U.O.N.
7. REPLACE ALL EXISTING RECEPTACLES WITH TYPE GFCI, 20A.
8. ALL EXISTING MECHANICAL AND PIPING SHALL BE REMOVED FROM ABOVE THE DEDICATED ELECTRICAL SPACE FOR ELECTRICAL EQUIPMENT. COORDINATE WITH OTHER TRADES.
9. SEE E-301 SINGLE LINE DIAGRAM AND PHASING PLANS FOR EQUIPMENT PHASING REQUIREMENTS. COORDINATE DEMOLITION AND TEMPORARY ELECTRICAL WORK DURING COOLING TOWER SWITCHOVER WITH MECHANICAL PLANS.

01 EXISTING MAIN ROOF/BULKHEAD PLAN
SCALE: 1/8"=1'-0"

DOB APPROVAL STAMP

STATE OF NEW YORK
JESSE KEMERSON
105638
LICENSED PROFESSIONAL ENGINEER

Jesse C Kemerson
2026.02.02 10:16:46-05'00'

COOLING TOWER REPLACEMENT

BRONX DISTRICT ATTORNEY'S OFFICE
198 E 161ST STREET
NEW YORK, NEW YORK 10451

SPONSOR AGENCY:
DEPARTMENT OF CITYWIDE ADMINISTRATIVE SERVICES
MANHATTAN MUNICIPAL BUILDING
ONE CENTER STREET, 17 FLOOR SOUTH;
NEW YORK, NEW YORK 10007

MANAGING AGENCY:
DEPARTMENT OF DESIGN AND CONSTRUCTION
30-30 THOMSON AVENUE;
LONG ISLAND CITY, NEW YORK 10007

ARCHITECT:
NANDINEE PHOOKAN ARCHITECT
45 MAIN STREET SUITE #620
BROOKLYN NY 11201
P: 718 643 9500

STRUCTURAL ENGINEER:
LERA CONSULTING STRUCTURAL ENGINEERS
40 WALL STREET, FLOOR 23
NEW YORK, NY 10005
P: 212 750 9000

MEP ENGINEER:
DEWBERRY ENGINEERS
132 WEST 31ST STREET, SUITE 301
NEW YORK, NEW YORK 10001
P: 646 434 2822

PLUMBING ENGINEER:
AXON ENGINEERING SERVICES, LLC
222 OUTWATER LN, SUITE 3A
GARFIELD, NJ 07026
p: 917 677 2484

KEY PLAN:

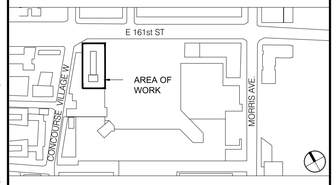

REVISIONS:

NUMBER	DESCRIPTION	DATE
	ISSUED FOR BID	01-27-2026

Department of Design and Construction

DIVISION OF PUBLIC BUILDINGS

CAPITAL PROJECT NUMBER:
PW77198CT

PROJECT
198 E 161ST STREET COOLING TOWER REPLACEMENT
198 E 161ST ST
BRONX, NY 10451

FOR THE:
Department of Citywide Administrative Services (DCAS)

DOB NOW APPLICATION: X01141830-I1

DRAWING TITLE:
ELECTRICAL COOLING TOWER DEMOLITION PLAN

SEAL & SIGNATURE

DATE:	02 May, 2025
PROJECT NO:	22_01
DRAWN BY:	MR
CHECKED BY:	NS

DRAWING NUMBER:
ED-101.00

CADO FILE No:

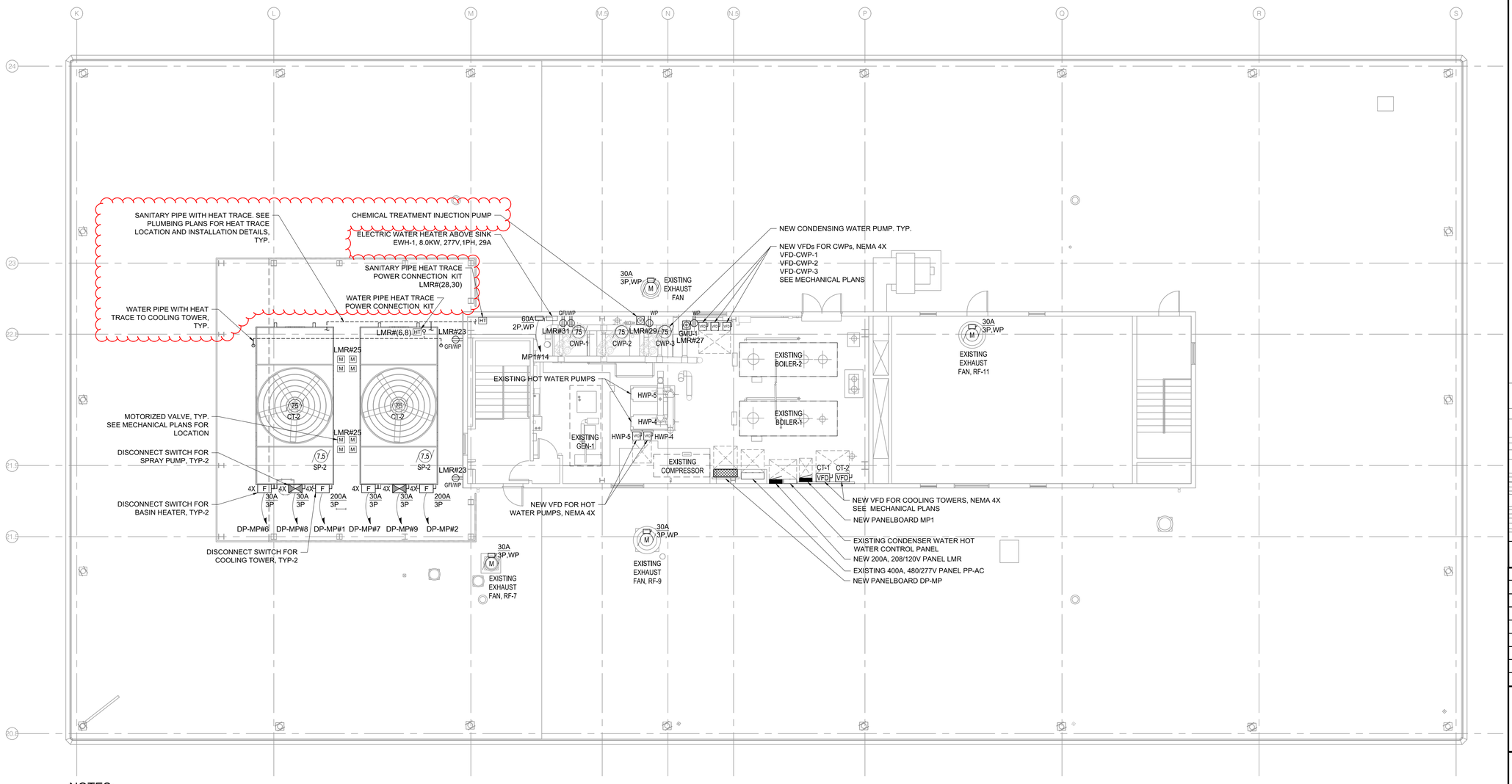

01 NEW MAIN ROOF/BULKHEAD PLAN
SCALE: 1/8"=1'-0"

NOTES:

1. COORDINATE EXACT SCOPE OF WORK AND FINAL POWER REQUIREMENTS WITH MECHANICAL CONTRACTOR FOR REPLACEMENT OF EXISTING COOLING TOWERS AND ALL ASSOCIATED EQUIPMENT.
2. PROVIDE POWER CIRCUIT TO ALL MOTORIZED VALVES. COORDINATE LOCATION AND QUANTITY WITH MECHANICAL/PLUMBING CONTRACTOR.
3. REFER TO ELECTRICAL SINGLE-LINE DIAGRAM FOR FEEDER AND DISCONNECT SIZES.
4. PROVIDE UNISTRUT CHANNEL SUPPORTS FOR ALL ELECTRICAL EQUIPMENT AND CONDUITS. ALL CONDUITS, BOXES AND FITTINGS INSTALLED OUTDOOR SHALL BE RGS AND APPROVED FOR WET LOCATION.
5. PROVIDE DRIP PANS 6'-0" ABOVE ALL ELECTRICAL EQUIPMENT (PANELBOARDS, DISCONNECTS, VFDs, ETC.). PROVIDE UNISTRUT SUPPORTS FOR ALL ELECTRICAL EQUIPMENT. IN THE EVENT THAT IT IS NOT FEASIBLE TO PROVIDE DRIP PANS ABOVE ELECTRICAL EQUIPMENT, THEN THE CONTRACTOR MUST COORDINATE AND PROVIDE AN ALTERNATIVE LOCATION THAT IS CLEAR OF FOREIGN OBJECTS (NOT ELECTRICAL) TO THE STRUCTURAL CEILING.
6. ALL EXISTING MECHANICAL AND PIPING SHALL BE REMOVED FROM ABOVE THE DEDICATED ELECTRICAL SPACE FOR ELECTRICAL EQUIPMENT. COORDINATE WITH OTHER TRADES.
7. COORDINATE AND ADJUST FINAL LOCATION OF ALL VFDs AND PANELBOARDS IN THE FIELD.
8. SEE E-301 SINGLE LINE DIAGRAM AND PHASING PLANS FOR EQUIPMENT PHASING REQUIREMENTS. COORDINATE DEMOLITION AND TEMPORARY ELECTRICAL WORK DURING COOLING TOWER SWITCHOVER WITH MECHANICAL PLANS.
9. MAINTAIN A MINIMUM WORKING SPACE CLEARANCE OF 30"W X 48"D X 7'0"H FOR ALL NEW ELECTRICAL EQUIPMENT (PANELBOARDS, VFD'S, DISCONNECTS, ETC.)
10. PROVIDE DEDICATED POWER CIRCUIT (MINIMUM OF 5, 20A, 120V) FOR EACH CONTROL SYSTEM AS REQUIRED: ONE (1) FOR SET OF PUMPS, ONE (1) FOR COOLING TOWER, ONE (1) FOR GMU, TWO (2) FOR OTHER CONTROLS AS REQUIRED. CONFIRM POWER AND CONTROL WIRING REQUIREMENTS WITH MECHANICAL AND PLUMBING CONTRACTORS.
11. PROVIDE POWER TO SANITARY AND COLD WATER PIPE HEAT TRACE SYSTEMS. REFER TO PLUMBING PLAN P-101.00 FOR HEAT TRACE LOCATIONS AND PLAN P-401.00 FOR INSTALLATION DETAILS. HEAT TRACE SHALL BE PROVIDED BY THE PLUMBING CONTRACTOR, INSTALLED BY THE ELECTRICAL CONTRACTOR, AND CONNECTED TO THE BUILDING MANAGEMENT SYSTEM (BMS) BY THE MECHANICAL CONTRACTOR. ELECTRICAL CONTRACTOR SHALL CONFIRM FINAL POWER REQUIREMENTS (120V OR 208V) WITH THE HEAT TRACE MANUFACTURER AND MECHANICAL CONTRACTOR. COORDINATE COMPLETE HEAT TRACE INSTALLATION WITH ALL TRADES.

DOB APPROVAL STAMP

STATE OF NEW YORK
JESSE KEMERSON
105638
LICENSED PROFESSIONAL ENGINEER

Jesse C Kemerson
2026.02.02 10:16:46-05'00'

COOLING TOWER REPLACEMENT

BRONX DISTRICT ATTORNEY'S OFFICE
198 E 161ST STREET
NEW YORK, NEW YORK 10451

SPONSOR AGENCY:
DEPARTMENT OF CITYWIDE ADMINISTRATIVE SERVICES
MANHATTAN MUNICIPAL BUILDING
ONE CENTER STREET, 17 FLOOR SOUTH;
NEW YORK, NEW YORK 10007

MANAGING AGENCY:
DEPARTMENT OF DESIGN AND CONSTRUCTION
30-30 THOMSON AVENUE;
LONG ISLAND CITY, NEW YORK 10007

ARCHITECT:
NANDINEE PHOOKAN ARCHITECT
45 MAIN STREET SUITE #620
BROOKLYN NY 11201
P: 718 643 9500

STRUCTURAL ENGINEER:
LERA CONSULTING STRUCTURAL ENGINEERS
40 WALL STREET, FLOOR 23
NEW YORK, NY 10005
P: 212 750 9000

MEP ENGINEER:
DEWBERRY ENGINEERS
132 WEST 31ST STREET, SUITE 301
NEW YORK, NEW YORK 10001
P: 646 434 2822

PLUMBING ENGINEER:
AXON ENGINEERING SERVICES, LLC
222 OUTWATER LN, SUITE 3A
GARFIELD, NJ 07026
p: 917 677 2484

KEY PLAN:

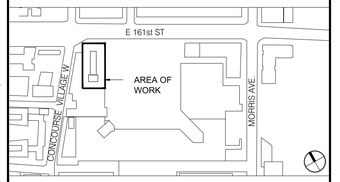

REVISIONS:

NUMBER	DESCRIPTION	DATE
	ISSUED FOR BID	01-27-2026
	ADDENDUM #2	04-29-2026

Department of Design and Construction

DIVISION OF PUBLIC BUILDINGS

CAPITAL PROJECT NUMBER:
PW77198CT

PROJECT
198 E 161ST STREET COOLING TOWER REPLACEMENT
198 E 161ST ST
BRONX, NY 10451

FOR THE:
Department of Citywide Administrative Services (DCAS)

DOB NOW APPLICATION: X01141830-I1

DRAWING TITLE:
ELECTRICAL COOLING TOWER NEW PLAN

SEAL & SIGNATURE

DATE:	02 May, 2025
PROJECT NO:	22_01
DRAWN BY:	MR
CHECKED BY:	NS
DRAWING NUMBER:	E-101.00
CADO FILE No:	

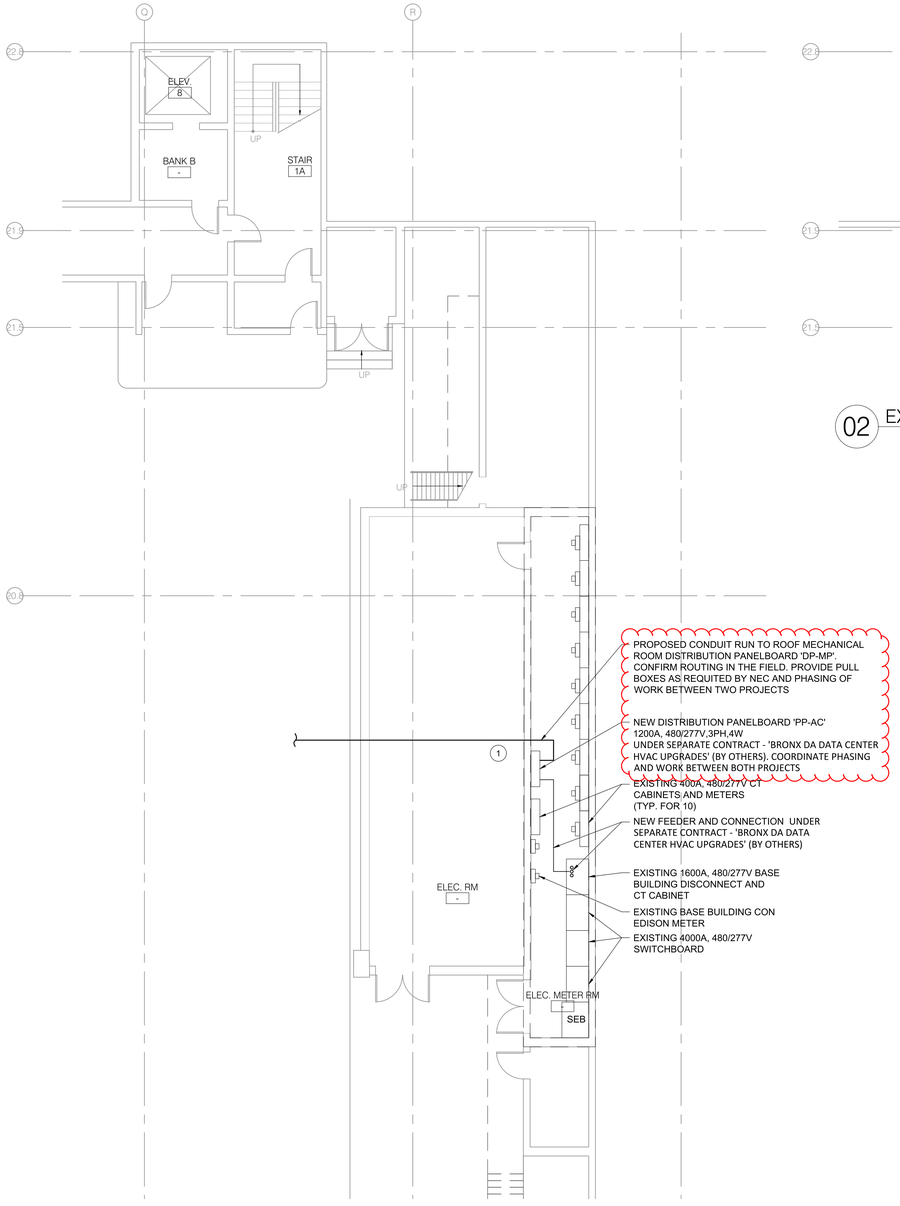

01 EXISTING SUB-CELLAR FLOOR - PART PLAN

SCALE: 1/8"=1'-0"

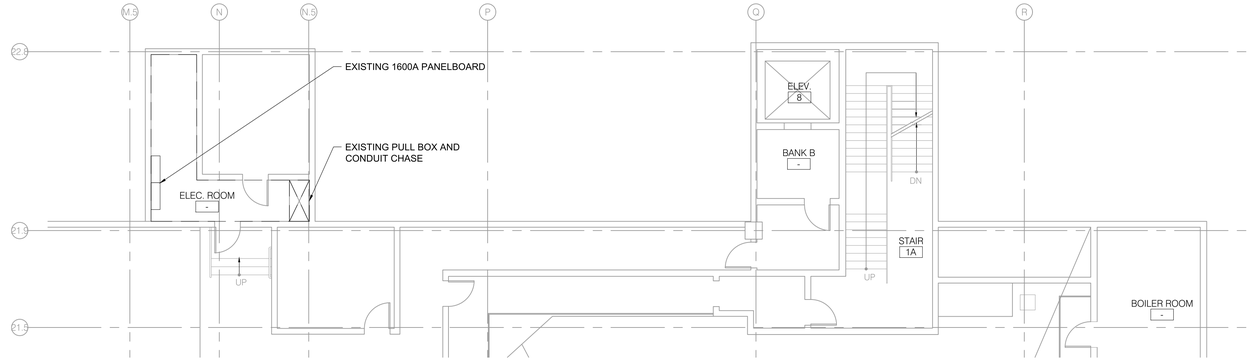

02 EXISTING CELLAR FLOOR - PART PLAN

SCALE: 1/8"=1'-0"

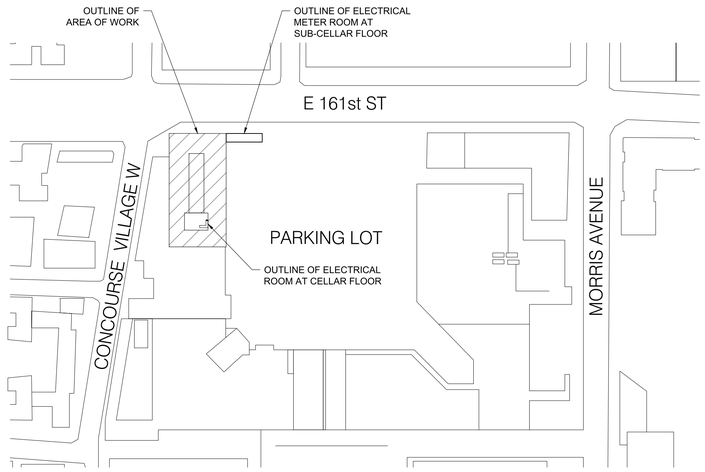

03 SITE KEY PLAN

SCALE: N.T.S.

KEY NOTES

(1) PROVIDE AND INSTALL NEW FEEDER FROM NEW DISTRIBUTION PANELBOARD PP-AC IN THE SWITCHGEAR ROOM TO NEW MECHANICAL PANELBOARD DP-MP IN THE MECHANICAL ROOM ON THE ROOF. RUN FEEDER VERTICALLY TO TOP OF MEZZANINE FLOOR, RUN HORIZONTALLY TO EXISTING RISER SHAFT/CHASE AND RUN VERTICALLY TO MECHANICAL ROOM ON THE ROOF. VERIFY EXACT CONDUIT ROUTING, INSTALLATIONS REQUIREMENT ON EACH FLOOR AND ALL DIMENSIONS IN THE FIELD PRIOR ANY WORK.

NOTES

1. VERIFY EXACT CONDUIT ROUTING AND ALL DIMENSIONS IN THE FIELD PRIOR ANY WORK. CONDUIT ROUTING SHOWN IS SCHEMATIC AND SHALL BE ADJUSTED TO SUIT FIELD CONDITIONS. FIELD VERIFY CONDUIT ENTRY TO THE ELECTRIC ROOM AND ADJUST ENTRY POINT AS REQUIRED. COORDINATE ROUTING WITH EXISTING PIPES, CONDUITS, EQUIPMENT, ETC. IN FIELD AND WITH THE BUILDING AUTHORITIES PRIOR TO ANY WORK.
2. ELECTRICAL CONTRACTOR SHALL COORDINATE WITH BUILDING AUTHORITIES FOR LOCATION OF ALL FEEDERS, ROUTING OF CONDUIT AND CONDUIT AND EQUIPMENT INSTALLATION REQUIREMENTS.
3. ALL EQUIPMENT SHOWN IS EXISTING U.O.N. REFER TO SINGLE-LINE DIAGRAM FOR CONDUIT AND WIRING SIZES AND ADDITIONAL INTERCONNECTION REQUIREMENTS. ALL FEEDERS INDICATED SHALL BE COPPER CONDUCTORS IN RGS CONDUIT
4. PROVIDE ALL REQUIRED PULL BOXES, FASTENERS, HANGERS SUPPORTS, BRACKETS OR OTHER ACCESSORIES REQUIRED AND NECESSARY FOR PROPER SUPPORT OF ELECTRICAL CONDUIT AND EQUIPMENT.
5. CONFIRM CONDUIT ROUTING AND CONSTRUCTABILITY IN ALL ELECTRICAL CLOSETS PRIOR TO ANY CONDUIT WORK. ELECTRICAL CLOSETS INCLUDE EXISTING PANELS AND POWER RISERS.
6. PROVIDE AN ACCESSIBLE PULL BOX AT A MAXIMUM OF EVERY 270 DEGREES OF TURNS.
7. ALL PENETRATIONS SHALL BE SEALED. FIRE RATED PENETRATIONS SHALL BE FIRE STOPPED.

DOB APPROVAL STAMP

STATE OF NEW YORK
JESSE KEMERSON
105638
LICENSED PROFESSIONAL ENGINEER

Jesse C Kemerson
2026.02.02 10:16:47-05'00'

COOLING TOWER REPLACEMENT

BRONX DISTRICT ATTORNEY'S OFFICE
198 E 161ST STREET
NEW YORK, NEW YORK 10451

SPONSOR AGENCY:
DEPARTMENT OF CITYWIDE ADMINISTRATIVE SERVICES
MANHATTAN MUNICIPAL BUILDING
ONE CENTER STREET, 17 FLOOR SOUTH;
NEW YORK, NEW YORK 10007

MANAGING AGENCY:
DEPARTMENT OF DESIGN AND CONSTRUCTION
30-30 THOMSON AVENUE;
LONG ISLAND CITY, NEW YORK 10007

ARCHITECT:
NANDINEE PHOOKAN ARCHITECT
45 MAIN STREET SUITE #620
BROOKLYN NY 11201
P: 718 643 9500

STRUCTURAL ENGINEER:
LERA CONSULTING STRUCTURAL ENGINEERS
40 WALL STREET, FLOOR 23
NEW YORK, NY 10005
P: 212 750 9000

MEP ENGINEER:
DEWBERRY ENGINEERS
132 WEST 31ST STREET, SUITE 301
NEW YORK, NEW YORK 10001
P: 646 434 2822

PLUMBING ENGINEER:
AXON ENGINEERING SERVICES, LLC
222 OUTWATER LN, SUITE 3A
GARFIELD, NJ 07026
p: 917 677 2484

KEY PLAN:

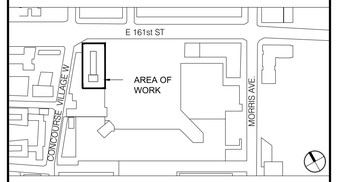

REVISIONS:

NUMBER	DESCRIPTION	DATE
	ISSUED FOR BID	01-27-2026
	ADDENDUM #2	04-29-2026
	ADDENDUM #4	05-19-2026

NYC DDC Department of Design and Construction

DIVISION OF PUBLIC BUILDINGS

CAPITAL PROJECT NUMBER:
PW77198CT

PROJECT
198 E 161ST STREET COOLING TOWER REPLACEMENT
198 E 161ST ST
BRONX, NY 10451

FOR THE:
Department of Citywide Administrative Services (DCAS)

DOB NOW APPLICATION: X01141830-I1

DRAWING TITLE:
ELECTRICAL COOLING TOWER PART PLANS

SEAL & SIGNATURE

DATE:	02 May, 2025
PROJECT NO:	22_01
DRAWN BY:	MR
CHECKED BY:	NS
DRAWING NUMBER:	E-201.00
CADO FILE No:	
	04 OF 07

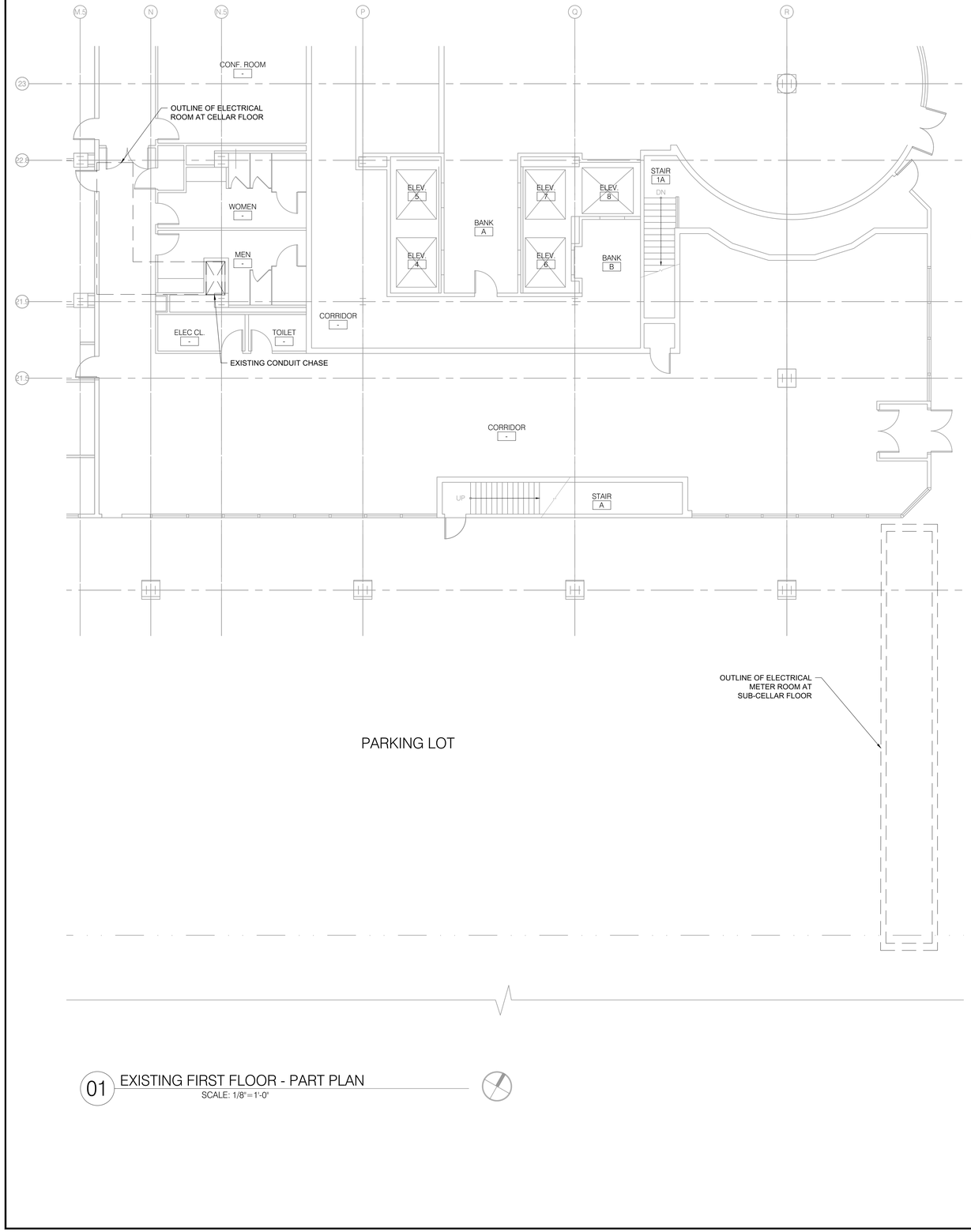

01 EXISTING FIRST FLOOR - PART PLAN

SCALE: 1/8"=1'-0"

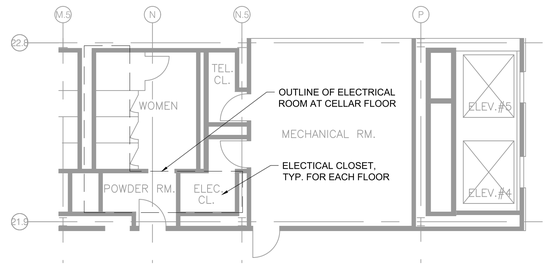

02 EXISTING SECOND FLOOR - PART PLAN (TYPICAL FOR 2ND THRU 10TH FLOORS)

SCALE: 1/8"=1'-0"

NOTES

1. VERIFY EXACT CONDUIT ROUTING AND ALL DIMENSIONS IN THE FIELD PRIOR ANY WORK. CONDUIT ROUTING SHOWN IS SCHEMATIC AND SHALL BE ADJUSTED TO SUIT FIELD CONDITIONS. FIELD VERIFY CONDUIT ENTRY TO THE ELECTRIC ROOM AND ADJUST ENTRY POINT AS REQUIRED. COORDINATE ROUTING WITH EXISTING PIPES, CONDUITS, EQUIPMENT, ETC. IN FIELD AND WITH THE BUILDING AUTHORITIES PRIOR TO ANY WORK.
2. ELECTRICAL CONTRACTOR SHALL COORDINATE WITH BUILDING AUTHORITIES FOR LOCATION OF ALL FEEDERS, ROUTING OF CONDUIT AND CONDUIT AND EQUIPMENT INSTALLATION REQUIREMENTS. .
3. ALL EQUIPMENT SHOWN IS EXISTING U.O.N. REFER TO SINGLE-LINE DIAGRAM FOR CONDUIT AND WIRING SIZES AND ADDITIONAL INTERCONNECTION REQUIREMENTS. ALL FEEDERS INDICATED SHALL BE COPPER CONDUCTORS IN RGS CONDUIT
4. PROVIDE ALL REQUIRED PULL BOXES, FASTENERS, HANGERS SUPPORTS, BRACKETS OR OTHER ACCESSORIES REQUIRED AND NECESSARY FOR PROPER SUPPORT OF ELECTRICAL CONDUIT AND EQUIPMENT.
5. CONFIRM CONDUIT ROUTING AND CONSTRUCTABILITY IN ALL ELECTRICAL CLOSETS PRIOR TO ANY CONDUIT WORK. ELECTRICAL CLOSETS INCLUDE EXISTING PANELS AND POWER RISERS.
6. PROVIDE AN ACCESSIBLE PULL BOX AT A MAXIMUM OF EVERY 270 DEGREES OF TURNS.
7. ALL PENETRATIONS SHALL BE SEALED. FIRE RATED PENETRATIONS SHALL BE FIRE STOPPED.

DOB APPROVAL STAMP

STATE OF NEW YORK
JESSE KEMERSON
105638
LICENSED PROFESSIONAL ENGINEER

Jesse C Kemerson
2026.02.02 10:16:47-05'00'

SEAL & SIGNATURE

COOLING TOWER REPLACEMENT

BRONX DISTRICT ATTORNEY'S OFFICE
198 E 161ST STREET
NEW YORK, NEW YORK 10451

SPONSOR AGENCY:
DEPARTMENT OF CITYWIDE ADMINISTRATIVE SERVICES
MANHATTAN MUNICIPAL BUILDING
ONE CENTER STREET, 17 FLOOR SOUTH;
NEW YORK, NEW YORK 10007

MANAGING AGENCY:
DEPARTMENT OF DESIGN AND CONSTRUCTION
30-30 THOMSON AVENUE;
LONG ISLAND CITY, NEW YORK 10007

ARCHITECT:
NANDINEE PHOOKAN ARCHITECT
45 MAIN STREET SUITE #620
BROOKLYN NY 11201
P: 718 643 9500

STRUCTURAL ENGINEER:
LERA CONSULTING STRUCTURAL ENGINEERS
40 WALL STREET, FLOOR 23
NEW YORK, NY 10005
P: 212 750 9000

MEP ENGINEER:
DEWBERRY ENGINEERS
132 WEST 31ST STREET, SUITE 301
NEW YORK, NEW YORK 10001
P: 646 434 2822

PLUMBING ENGINEER:
AXON ENGINEERING SERVICES, LLC
222 OUTWATER LN, SUITE 3A
GARFIELD, NJ 07026
p: 917 677 2484

KEY PLAN:

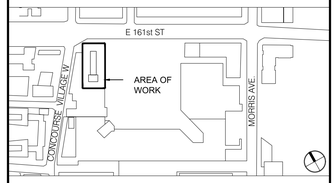

REVISIONS:

NUMBER	DESCRIPTION	DATE
	ISSUED FOR BID	01-27-2026
	ADDENDUM #2	04-29-2026
	ADDENDUM #4	05-19-2026

Department of Design and Construction

DIVISION OF PUBLIC BUILDINGS

CAPITAL PROJECT NUMBER:
PW77198CT

PROJECT
198 E 161ST STREET COOLING TOWER REPLACEMENT
198 E 161ST ST
BRONX, NY 10451

FOR THE:
Department of Citywide Administrative Services (DCAS)

DOB NOW APPLICATION: X01141830-I1

DRAWING TITLE:
ELECTRICAL COOLING TOWER PART PLANS

DATE:	02 May, 2025
PROJECT NO:	22_01
DRAWN BY:	MR
CHECKED BY:	RK
DRAWING NUMBER:	E-202.00
CADO FILE No:	

KEY NOTES:

1. BUS TAP CONNECTION AND EVALUATION UNDER SEPARATE CONTRACT - 'BRONX DA DATA CENTER HVAC UPGRADES' (BY OTHERS).
2. THE EXISTING EQUIPMENT EVALUATION UNDER SEPARATE CONTRACT - 'BRONX DA DATA CENTER HVAC UPGRADES', (BY OTHERS).
3. PROVIDE COMBINATION VFD WITH INTEGRAL FUSED DISCONNECT FROM SINGLE MANUFACTURER, TYPICAL FOR ALL VFDs. CONFIRM VFD FINAL REQUIREMENTS WITH COOLING TOWER SUPPLIER PRIOR SHOP DRAWINGS SUBMITTAL AND ANY WORK. COORDINATE WITH DDC FOR REQUIRED CONTROL AND MONITORING FOR COOLING TOWERS. PROVIDE INTERFACE WITH EXISTING DDC SYSTEM AND DDC CONTROLLER.
4. PROVIDE MOTOR FUSED DISCONNECT WITH AN AUXILIARY CONTACT TO PROVIDE EARLY BREAK FUNCTIONALITY. THIS CONTACT SHALL SIGNAL THE DRIVE BEFORE DISCONNECTING THE MOTOR TO POWER DOWN IN A CONTROLLED MANNER BEFORE THE MAINS OPEN.
5. PROVIDE COMBINATION VFD WITH DISCONNECT SWITCH FROM SINGLE MANUFACTURER. CONFIRM VFD FINAL REQUIREMENTS WITH COOLING TOWER AND CHILLED WATER PUMP SUPPLIER. COORDINATE WITH DDC FOR REQUIRED CONTROL AND MONITORING AND INTERFACE WITH EXISTING DDC SYSTEM AND DDC CONTROLLER.
6. VERIFY EXISTING EQUIPMENT, SWITCHES AND PROVIDE NEW FUSES.
7. EXISTING CWP-3 AND EXISTING CT-2 SHALL BE TEMPORARILY FED FROM NEW DISTRIBUTION BOARD DP-MP DURING PHASED WORK. PROVIDE NEW MOTOR STARTER AT WALL NEAR CWP-3. REMOVE EXISTING FEEDERS FROM MCC AND PROVIDE NEW FEEDERS TO EXTEND FROM CWP-3 AND CT-2 VFD TO NEW DP-MP. REMOVE TEMPORARY FEEDERS AND ASSOCIATED DISCONNECTS/STARTERS/VFD UPON DEMOLITION OF EXSITNG CWP-3 AND CT-2. SEE PHASING PLANS FOR ADDITIONAL DETAILS.
8. NEW CT-2 AND NEW CWP-3 TO BE INSTALLED IN DP-MP UPON REMOVAL OF TEMPORARY FEEDERS AND ASSOCIATED EQUIPMENT FOR EXISTING CT-2 AND CWP-3. SEE PHASING PLANS FOR ADDITIONAL DETAILS.
9. CONFIRM EXISTING TRANSFORMER SIZE AND TOTAL EXISTING LOAD VIA 30 DAY DEMAND STUDY.

POWER SYSTEM DEPENDENCY NOTICE:
THE DESIGN, APPROVAL, PROCUREMENT, AND INSTALLATION OF ALL ELECTRICAL EQUIPMENT SHOWN UNDER THIS CONTRACT IS EXPRESSLY DEPENDENT ON THE FINAL CONFIGURATION AND APPROVAL OF THE NEW ELECTRICAL DISTRIBUTION SWITCHBOARD AND ASSOCIATED SERVICE DETERMINATION FURNISHED UNDER SEPARATE CONTRACT. THIS WORK IS CONTINGENT UPON FINAL UTILITY COORDINATION AND CONFIRMATION OF SERVICE CAPACITY, AVAILABLE FAULT CURRENT, AND SYSTEM CHARACTERISTICS. ALL EQUIPMENT RATINGS, QUANITIES, INTERRUPTING RATINGS, PROTECTIVE DEVICE TYPES, AND SETTINGS SHALL BE VERIFIED AGAINST AND MAY BE REVISED BASED ON THE FINAL APPROVED POWER SYSTEM STUDIES, INCLUDING LOAD FLOW, SHORT-CIRCUIT, VOLTAGE DROP, AND PROTECTIVE DEVICE COORDINATION. NO CLAIMS FOR ADDITIONAL COST OR SCHEDULE IMPACTS ASSOCIATED WITH REVISIONS REQUIRED TO ACHIEVE COMPLIANCE WITH THESE STUDIES SHALL BE ATTRIBUTED TO THE ENGINEER OF RECORD.

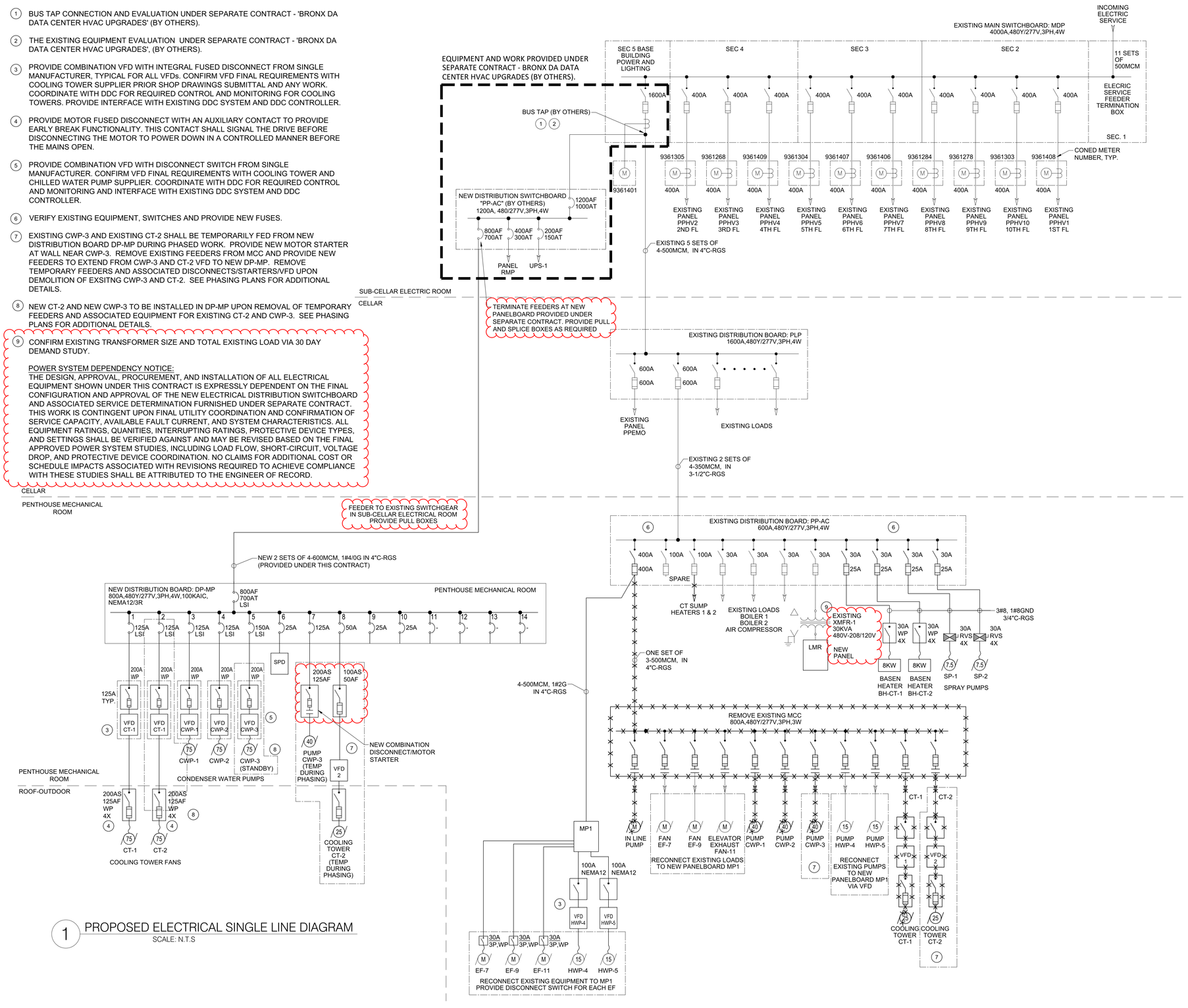

1 PROPOSED ELECTRICAL SINGLE LINE DIAGRAM
SCALE: N.T.S

LEGEND
- DEMOLITION
- EXISTING
- NEW

COOLING TOWER REPLACEMENT

BRONX DISTRICT ATTORNEY'S OFFICE
198 E 161ST STREET
NEW YORK, NEW YORK 10451

SPONSOR AGENCY:
DEPARTMENT OF CITYWIDE ADMINISTRATIVE SERVICES
MANHATTAN MUNICIPAL BUILDING
ONE CENTER STREET, 17 FLOOR SOUTH;
NEW YORK, NEW YORK 10007

MANAGING AGENCY:
DEPARTMENT OF DESIGN AND CONSTRUCTION
30-30 THOMSON AVENUE;
LONG ISLAND CITY, NEW YORK 10007

ARCHITECT:
NANDINEE PHOOKAN ARCHITECT
45 MAIN STREET SUITE #620
BROOKLYN NY 11201
P: 718 643 9500

STRUCTURAL ENGINEER:
LERA CONSULTING STRUCTURAL ENGINEERS
40 WALL STREET, FLOOR 23
NEW YORK, NY 10005
P: 212 750 9000

MEP ENGINEER:
DEWBERRY ENGINEERS
132 WEST 31ST STREET, SUITE 301
NEW YORK, NEW YORK 10001
P: 646 434 2822

PLUMBING ENGINEER:
AXON ENGINEERING SERVICES, LLC
222 OUTWATER LN, SUITE 3A
GARFIELD, NJ 07026
p: 917 677 2484

KEY PLAN:

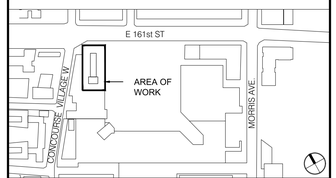

REVISIONS:

NUMBER	DESCRIPTION	DATE
	ISSUED FOR BID	01-27-2026
	ADDENDUM #2	04-29-2026

NYC DDC Department of Design and Construction

DIVISION OF PUBLIC BUILDINGS

CAPITAL PROJECT NUMBER:
PW77198CT

PROJECT
198 E 161ST STREET COOLING TOWER REPLACEMENT
198 E 161ST ST
BRONX, NY 10451

FOR THE:
Department of Citywide Administrative Services (DCAS)

DOB NOW APPLICATION: X01141830-I1

DRAWING TITLE:
ELECTRICAL SINGLE-LINE DIAGRAM

DOB APPROVAL STAMP



Jesse C Kemerson
2026.02.02 10:16:48-05'00'

SEAL & SIGNATURE

DATE:	02 May, 2025
PROJECT NO:	22_01
DRAWN BY:	MR
CHECKED BY:	NS
DRAWING NUMBER:	E-301.00
CADO FILE No:	

DISTRIBUTION TYPE 'DB' PANELBOARD SCHEDULE: DP-MP								LOCATION: PENTHOUSE MECHANICAL ROOM
MANUFACTURER: SQUARE D I-LINE		SYSTEM VOLTAGE: 480Y/277V, 3Ø, 4W				BRANCH BREAKERS TYPE: BOLT-ON		MOUNTING: SURFACE
MAIN PROTECTIVE DEVICE: 700A, 100% RATED						NEUTRAL BUS: 100%		DOOR REQUIRED: YES, (HINGED)
MAIN BUS SIZE: 800A, CU						EQUIPMENT GROUND BUS: YES		AIC RATING (A): 100 KAIC
NEMA RATING: TYPE 12/3R		PHASE: 3Ø, 4W + GROUND: 60 HERTZ				ISOLATED GROUND BUS: -		SERVICE ENTRANCE RATED:
FEEDER NO	DESCRIPTION (LOAD SERVES)		BREAKER (AMP) FRAME	TRIP	POLES	LOAD KVA	FEEDER SIZE (THWN-2)	CONDUIT SIZE-RGS	NOTES
1	COOLING TOWER, CT-1 (75HP, 96 FLC)		225	125	3	79.1	3#1/0, 1#4GND	2"C	
2	COOLING TOWER, CT-2 (75HP, 96 FLC)		225	125	3	79.8	3#1/0, 1#4GND	2"C	
3	CWP-1 (75HP, 96 FLC)		225	125	3	79.8	3#1/0, 1#4GND	2"C	
4	CWP-2 (75HP, 96 FLC)		225	125	3	79.8	3#1/0, 1#4GND	2"C	
5	CWP-3 (75HP, 96 FLC, STANDBY)		225	125	3	79.8	3#1/0, 1#4GND	2"C	STANDBY
6	SPD		100	25	3	-	4#10, 1#8GND	3/4"C	
7	SPARE (TEMP FOR EX. CWP-3)		225	125	3	-	3#1, 1#8GND (TEMP)	1-1/2"C	
8	SPARE (TEMP FOR EX. CT-2)		100	50	3	-	3#6, 1#10GND (TEMP)	3/4"C	
9	SPARE		100	25	3	-			
10	SPARE		100	25	3	-			
11	-		225	-	3	-		-	
12	-		100	-	3	-		-	
13	-		100	-	3	-		-	
14	-		100	-	3	-		-	
			TOTAL CONNECTED LOAD (KVA)			478.8			
			TOTAL CONNECTED LOAD (AMP)			576.2			

NOTES:
1. FINAL CIRCUIT BREAKER TRIP FOR VFD SHALL BE SET BASED ON THE SELECTED VFD'S INPUT CURRENT RATING.
2. PUMP CWP-3 IS STANDBY. PANELBOARD DEMAND LOAD IS 399 KVA AND 480.1 AMPS.
3. OVERLOAD PROTECTION SETTINGS SHALL BE PROVIDED IN VFD'S AND ADJUSTED PER NEC STANDARDS.

PANELBOARD ID: MP1

LOCATION: PENTHOUSE MECHANICAL ROOM

MAIN BUS SIZE: 400A
MAIN PROTECTIVE TYPE: MCB, LSI
MAIN DEVICE SIZE: 400A
VOLTAGE: 208/120V
CONNECTION: 3 PH, 4 WIRE + G
CYCLES: 60 HZ
BRANCH BKRS TYPE: BOLT-ON
NEUTRAL: 400A
EQUIPMENT GROUND BUS: YES
MOUNTING: SURFACE
SC RATING: - 65KAIC
ENCLOSURE: NEMA 12/3R

CKT NO.	DESIGNATION/LOAD SERVES	BREAKER TRIP	BREAKER POLES	BRANCH CIRCUIT	LOAD (KVA) A	LOAD (KVA) B	LOAD (KVA) C	BRANCH CIRCUIT	BREAKER POLES	BREAKER TRIP	DESIGNATION/LOAD SERVES	CKT NO.
1					0.6							2
3	EXISTING FAN EF-7, 1HP	30	3	3#10,1#10G,1"C	5.9	0.6		3#4,1#6G,1-1/4"C	3	70	EXISTING WATER PUMP-4, 15HP	4
5						5.9	0.6				PROVIDE VFD W/ DISCONNECT	6
7					0.6		5.9					8
9	EXISTING FAN EF-9, 1HP	30	3	3#10,1#10G,1"C	5.9	0.6		3#4,1#6G,1-1/4"C	3	70	EXISTING WATER PUMP-5, 15HP	10
11						5.9	0.6				PROVIDE VFD W/ DISCONNECT	12
13					0.6		5.9	2#8,1#10G,3/4"C	1	40	ELECTRIC WATER HEATER EWH-1	14
15	EXISTING ELEVATOR EXHAUST FAN	30	3	3#10,1#10G,1"C	8.3	0.6						16
17	EF-11, 1HP						0.6		3	100	SPARE	18
19					-							20
21	SPARE, LSI	125	3			-	-					22
23							-		3	50	SPARE	24
25		20	1		-							26
27		20	1			-			1	20	SPARE	28
29		20	1				-		1	20	SPARE	30
31		20	1		-				1	20	SPARE	32
33		20	1			-			1	20	SPARE	34
35		20	1				-		1	20	SPARE	36
37		20	1		-				1	20	SPARE	38
39		20	1			-			1	20	SPARE	40
41		20	1				-		1	20	SPARE	42
	CONNECTED LOAD (KVA/PHASE)				21.9	13.6	13.6					
	TOTAL CONNECTED LOAD (KVA)					49.1						
	TOTAL CONNECTED LOAD (AMP)					59.1						

BRANCH CIRCUIT: THWN-2

PANELBOARD ID: LMR (NEW)

LOCATION: PENTHOUSE MECHANICAL ROOM

MAIN BUS SIZE: 200A
MAIN PROTECTIVE TYPE: MCB
MAIN DEVICE SIZE: 100A
VOLTAGE: 208/120V
CONNECTION: 3 PH, 4 WIRE + G
CYCLES: 60 HZ
BRANCH BKRS TYPE: BOLT-ON
NEUTRAL: 200A
EQUIPMENT GROUND BUS: YES
MOUNTING: SURFACE
SC RATING: 22 KAIC
ENCLOSURE: NEMA TYPE 12/3R

CKT NO.	DESIGNATION/LOAD SERVES	BREAKER TRIP	BREAKER POLES	BRANCH CIRCUIT	LOAD (KVA) A	LOAD (KVA) B	LOAD (KVA) C	BRANCH CIRCUIT	BREAKER POLES	BREAKER TRIP	DESIGNATION/LOAD SERVES	CKT NO.
1	EXISTING AC ELEV. MACHINE ROOM	20	2		1.3				2	20	EXISTING AC ELEV. MACHINE ROOM	2
3					1.3	1.3						4
5	EXISTING AC ELEV. MACHINE ROOM	20	2			1.3	1.3					6
7					1.3		(0.6)	2#10,1#10G,3/4"C	2	20	NEW WATER PIPE HEAT TRACE	8
9	EXISTING EMR	20	1		0.6	1.2			1	20	EXISTING EVAPORATOR	10
11	EXISTING ELEV. RECEPT. AND LIGHTS	20	1			1.2	0.5		1	20	EXISTING BATTERY CHARGER	12
13	EXISTING ELEV. RECEPT. AND LIGHTS	20	1		0.5		0.5		1	20	EXISTING	14
15	EXISTING ELEV. RECEPT. AND LIGHTS	20	1			0.5			1	20	EXISTING	16
17	EXISTING ELEV. RECEPT. AND LIGHTS	20	1			0.5	1.0		1	20	EXISTING OUTSIDE LIGHTING	18
19	EXISTING ELEV. RECEPT. AND LIGHTS	20	1		0.5	0.6			1	20	EXISTING OUTSIDE RECEPTACLES	20
21	SPARE	30	1			1.3			1	20	SPARE	22
23	NEW ROOF RECEPTACLES	20	1	2#12,1#12G,3/4"C			(0.4)					24
25	NEW MOTORIZED VALVES	20	1	2#10,1#10G,3/4"C	(1.0)	(1.3)			2	20	EXISTING AC ELEV. MACHINE ROOM	26
27	NEW GMU-1 GLYCOL PUMP	20	1	2#12,1#12G,3/4"C		0.5	(0.6)					28
29	NEW CHEM TREATMENT IN/ECT PUMP	20	1	2#12,1#12G,3/4"C			(0.5)	2#10,1#10G,3/4"C	2	20	NEW SANITARY PIPE HEAT TRACE	30
31	RECEPTACLES	20	1	2#12,1#12G,3/4"C	0.4				1	20	SPARE	32
33		20	1			-			1	20	SPARE	34
35		20	1				-		1	20	SPARE	36
37		20	1		-				1	20	SPARE	38
39		20	1			-			1	20	SPARE	40
41		20	1				-		1	20	SPARE	42
	CONNECTED LOAD (KVA/PHASE)				9.3	8.4	7.2					
	TOTAL CONNECTED LOAD (KVA)					24.9						
	TOTAL CONNECTED LOAD (AMP)					69.0						

BRANCH CIRCUIT: THWN-2
REPLACE EXISTING PANEL WITH NEW PANELBOARD WITH SPARE CIRCUITS. CONFIRM EXISTING TRANSFORMER SIZE AND TOTAL LOAD

COOLING TOWER REPLACEMENT

BRONX DISTRICT ATTORNEY'S OFFICE
198 E 161ST STREET
NEW YORK, NEW YORK 10451

SPONSOR AGENCY:
DEPARTMENT OF CITYWIDE ADMINISTRATIVE SERVICES
MANHATTAN MUNICIPAL BUILDING
ONE CENTER STREET, 17 FLOOR SOUTH;
NEW YORK, NEW YORK 10007

MANAGING AGENCY:
DEPARTMENT OF DESIGN AND CONSTRUCTION
30-30 THOMSON AVENUE;
LONG ISLAND CITY, NEW YORK 10007

ARCHITECT:
NANDINEE PHOOKAN ARCHITECT
45 MAIN STREET SUITE #620
BROOKLYN NY 11201
P: 718 643 9500

STRUCTURAL ENGINEER:
LERA CONSULTING STRUCTURAL ENGINEERS
40 WALL STREET, FLOOR 23
NEW YORK, NY 10005
P: 212 750 9000

MEP ENGINEER:
DEWBERRY ENGINEERS
132 WEST 31ST STREET, SUITE 301
NEW YORK, NEW YORK 10001
P: 646 434 2822

PLUMBING ENGINEER:
AXON ENGINEERING SERVICES, LLC
222 OUTWATER LN, SUITE 3A
GARFIELD, NJ 07026
p: 917 677 2484

KEY PLAN:

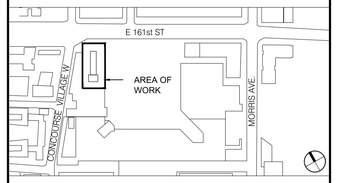

REVISIONS:

NUMBER	DESCRIPTION	DATE
	ISSUED FOR BID	01-27-2026
	ADDENDUM #2	04-29-2026

Department of Design and Construction

DIVISION OF PUBLIC BUILDINGS

CAPITAL PROJECT NUMBER:
PW77198CT

PROJECT
198 E 161ST STREET COOLING TOWER REPLACEMENT
198 E 161ST ST
BRONX, NY 10451

FOR THE:
Department of Citywide Administrative Services (DCAS)

DOB NOW APPLICATION: X01141830-I1

DRAWING TITLE:
ELECTRICAL
PANEL SCHEDULES

DOB APPROVAL STAMP

STATE OF NEW YORK
JESSE KEMERSON
105638
LICENSED PROFESSIONAL ENGINEER
Jesse C Kemerson
2026.02.02 10:16:48-05'00'

SEAL & SIGNATURE

DATE:	02 May, 2025
PROJECT NO:	22_01
DRAWN BY:	MR
CHECKED BY:	NS
DRAWING NUMBER:	E-401.00
CADO FILE No:	
	07 OF 07

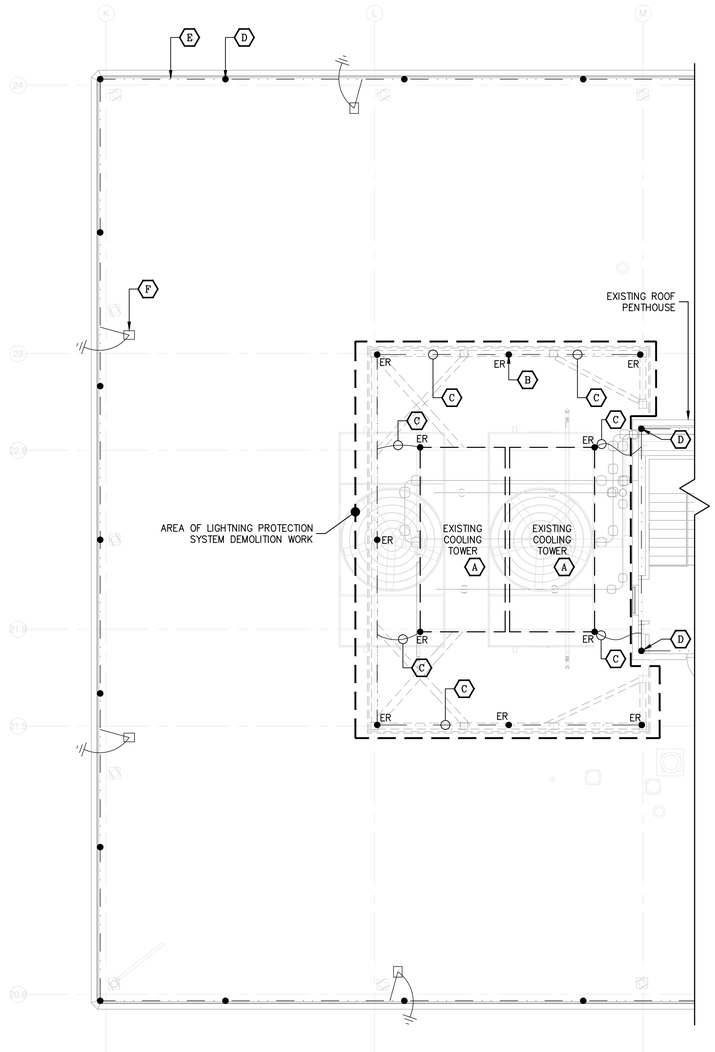

1 ROOF – LIGHTNING PROTECTION SYSTEM DEMOLITION PLAN
SCALE: 1/8"=1'-0"

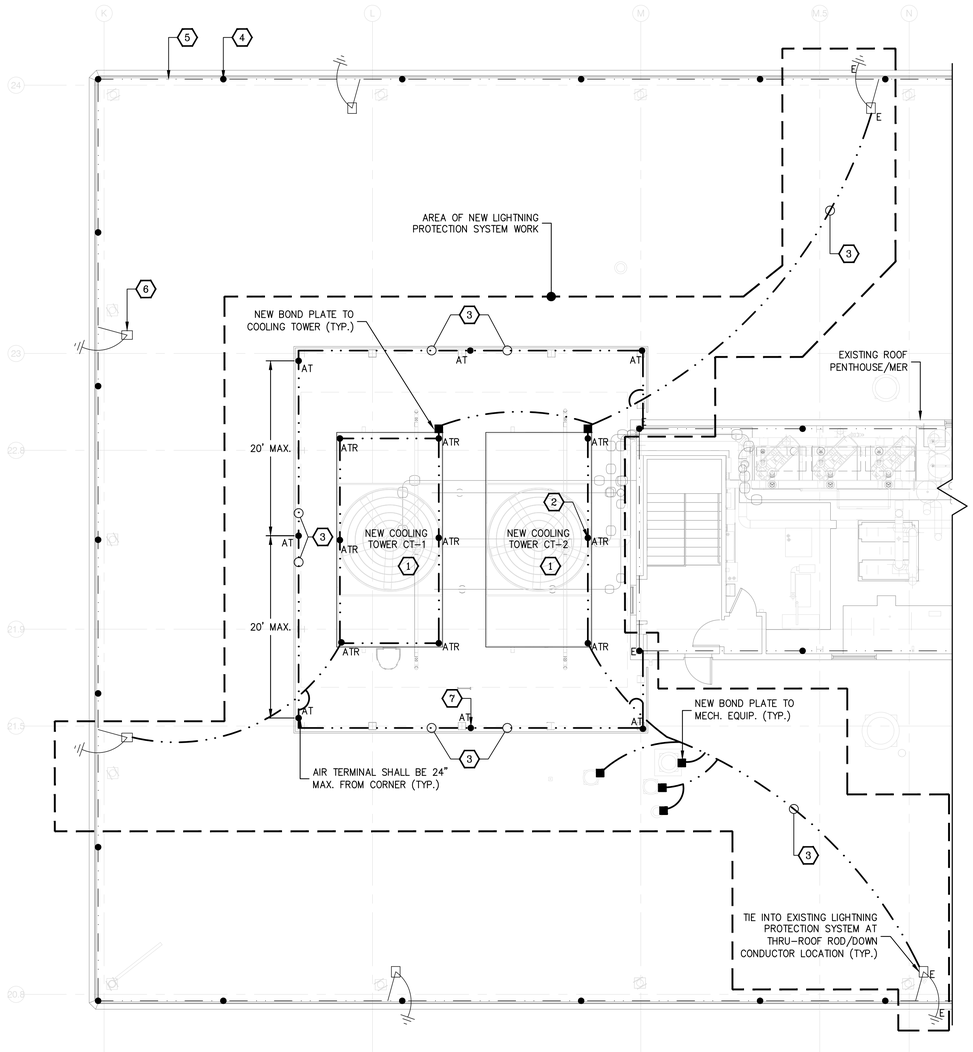

2 ROOF – LIGHTNING PROTECTION SYSTEM NEW WORK PLAN
SCALE: 1/8"=1'-0"

SCOPE OF WORK

THE LIGHTNING PROTECTION SYSTEM SCOPE OF WORK IN THIS PROJECT INCLUDES A PARTIAL DEMOLITION OF THE EXISTING AIR TERMINALS, CONDUCTORS AND ASSOCIATED ACCESSORIES AND FITTINGS TO FACILITATE THE REMOVAL OF THE TWO EXISTING COOLING TOWERS AND THEIR ASSOCIATED ARCHITECTURAL/STRUCTURAL SUPPORTS..

TWO NEW COOLING TOWERS CT-1 AND CT-2 WILL BE INSTALLED, WITH STRUCTURAL AND ARCHITECTURAL ELEMENTS. THIS CONTRACTOR SHALL INSTALL A NEW LIGHTNING PROTECTION SYSTEM AIR TERMINAL SYSTEM TO PROTECT THE NEW COOLING TOWERS CT-1, CT-2 AND THE STRUCTURE.

DESIGNS ARE SHOWN TO DEMONSTRATE THE SCOPE OF WORK. UPON AWARDING OF THE CONTRACT THE CONTRACTOR MUST SURVEY THE SITE AND SUBMIT SHOP DRAWINGS TO THE EOR FOR FINAL APPROVAL.

LPS PLAN NOTES

1. REFER TO DRAWING EL-201 FOR LIGHTNING PROTECTIONS DETAILS AND ADDITIONAL INFORMATION THAT MAY APPLY.

LPS DEMOLITION KEY NOTES:

A. EXISTING COOLING TOWER 1 AND 2 TO BE REMOVED BY THE MECH. CONTRACTOR.

B. EXISTING LIGHTNING PROTECTION SYSTEM AIR TERMINAL SHALL BE REMOVED. TYPICAL FOR 11 SHOWN IN THE AREA OF WORK.

C. EXISTING LIGHTNING PROTECTION SYSTEM CONDUCTOR CABLE SHALL BE REMOVED.

D. EXISTING LPS AIR TERMINAL SHALL REMAIN AND MUST BE PROTECTED DURING DEMOLITION/INSTALLATION OF CT. TYP. FOR ALL OUTSIDE AREA OF WORK

E. EXISTING LPS CONDUCTOR CABLE SHALL REMAIN AND MUST BE PROTECTED DURING DEMOLITION/INSTALLATION OF CT. TYP. FOR ALL OUTSIDE AREA OF WORK

F. EXISTING LPS DOWN CONDUCTOR SHALL REMAIN AND MUST BE PROTECTED DURING DEMOLITION/INSTALLATION OF CT. TYP. FOR ALL OUTSIDE AREA OF WORK

NEW LPS WORK KEY NOTES:

1. NEW COOLING TOWER 1 AND 2 TO BE INSTALLED BY THE MECH. CONTRACTOR.
2. NEW LPS COPPER AIR TERMINAL (12") INSTALLED ON COOLING TOWER UNIT. THE TIP OF THE AIR TERMINAL SHALL BE A MINIMUM OF 12" ABOVE THE CT. TYP. FOR 9.
3. NEW COPPER LIGHTNING PROTECTION SYSTEM CONDUCTOR. 28 STRANDS OF 14 GAUGE BARE COPPER CONDUCTOR.
4. EXISTING LPS AIR TERMINAL SHALL REMAIN AND MUST BE PROTECTED DURING DEMOLITION/INSTALLATION OF CT. TYP. FOR ALL OUTSIDE AREA OF WORK
5. EXISTING LPS CONDUCTOR CABLE SHALL REMAIN AND MUST BE PROTECTED DURING DEMOLITION/INSTALLATION OF CT. TYP. FOR ALL OUTSIDE AREA OF WORK
6. EXISTING LPS DOWN CONDUCTOR SHALL REMAIN AND MUST BE PROTECTED DURING DEMOLITION/INSTALLATION OF CT. TYP. FOR ALL OUTSIDE AREA OF WORK
7. NEW LPS COPPER AIR TERMINAL (12") ON ADHESIVE BASE INSTALLED ON SCREEN STRUCTURE. TYP. FOR 7. GC TO VERIFY SURFACE MATERIAL PRIOR TO INSTALLATION. REFER TO DETAIL.

ELECTRICAL DEMOLITION NOTES

1. THE DEMOLITION WORK SHALL BE CARRIED ON IN EVERY RESPECT IN A THOROUGH AND WORKMANLIKE MANNER.
2. ALL DEMOLITION, REMOVAL, AND DISPOSAL WORK SHALL BE IN COMPLIANCE WITH THE REQUIREMENTS OF THE BUILDING CODE AND WITH ALL STATE AND FEDERAL REGULATIONS.
3. REMOVE ALL DEBRIS NOT EXPLICITLY DESIGNATED TO BE SALVAGED (TO REMAIN) FROM THE PREMISES AND LEGALLY DISPOSE OFF AWAY FROM PREMISES.
4. CAREFULLY REMOVE AND PROTECT ALL ITEMS TO BE SAVED AND REUSED AS INDICATED ON DRAWINGS. REPLACE ANY ITEMS THAT ARE DAMAGED BY REMOVAL AT YOUR OWN COST. NOTIFY THE AUTHORITY IN WRITING OF ANY ITEM THAT IS DAMAGED PRIOR TO REMOVAL SO THAT THEY MAY ASCERTAIN THE ITEM'S CONDITION.
5. PROTECT MATERIALS, SURFACES AND STRUCTURE, WHICH ARE TO REMAIN, FROM DAMAGE; IF DAMAGE OCCURS, REPAIR OR REPLACEMENT SHALL BE MADE BY THE CONTRACTOR, TO THE SATISFACTION OF THE AUTHORITY, AND AT THE EXPENSE OF THE CONTRACTOR.
6. DISCONNECT, REMOVE AND RELOCATE ANY ELECTRICAL EQUIPMENT NOT SHOWN ON THESE DRAWINGS AS PART OF THIS CONTRACT, BUT INTERFERES WITH THE WORK UNDER THIS CONTRACT. THIS WORK SHALL NOT BE CONSIDERED EXTRA AND SHALL BE DONE AT NO ADDITIONAL COST TO THE OWNER.
7. VISIT AND EXAMINE CAREFULLY THE AREAS AFFECTED BY THIS WORK TO BECOME FAMILIAR WITH EXISTING CONDITIONS AND WITH THE DIFFICULTIES THAT ATTEND THE EXECUTION OF THIS WORK
8. RELOCATE AND/OR ALTER THE EXISTING BUILDING COMPONENTS AS DIRECTED BY AUTHORITY'S REPRESENTATIVE. ALL RELOCATION OR ALTERATIONS TO BUILDING SHALL BE RESTORED TO THEIR ORIGINAL WORKING CONDITIONS AFTER SUCH RELOCATION OR ALTERATION WORK.
9. AT THE COMPLETION OF DEMOLITION WORK, ALL RUBBISH, DEBRIS AND WASTE MATERIALS SHALL BE REMOVED BY THE CONTRACTOR AND THE PREMISES SHALL BE LEFT IN CLEAN CONDITION.
10. MAINTAIN CONTINUITY FOR ALL EQUIPMENT TO REMAIN. PROVIDE ALL REQUIRED ACCESSORIES, WIRING AND CONDUIT AS REQUIRED.

LIGHTNING PROTECTION MATERIALS/SYMBOL LIST

— · · —	COPPER LIGHTNING PROTECTION MAIN CONDUCTOR	#CCHB-28-14
	COPPER LIGHTNING PROTECTION SECONDARY BONDING CABLE*	CCHB-#6
	COPPER CABLE FASTENERS.....	CFHB-72, 66, 64,
AT ●	1/2" x 12" COPPER AIR TERMINAL (BLUNT) AND ADHESIVE BASE (AT SCREEN)	CAHB-302B, CBHB-23D
ATR ●	1/2" x 12" COPPER AIR TERMINAL (BLUNT) AND COOLING TOWER UNIT BASE	CAHB-302B, CBHB-33D
■	*SECONDARY BONDING (USE SECONDARY BONDING CABLE #CCHB-#6):	
	*FLASHING CONNECTOR	CNHB-44D
	*METAL ROOF DRAIN CONNECTOR	CNHB-160D
	*METAL VENT PIPE CONNECTOR	CNHB-42XD
■	BONDING PLATE (AT MECH. EQUIP.)	PPHB-54D
	CABLE CONNECTOR	CNHB-44D

ABBREVIATIONS

A	AMPERE	ER	EXISTING TO BE REMOVED
AC	ALTERNATING CURRENT	GND	GROUND
AFF	ABOVE FINISHED FLOOR	LPS	LIGHTNING PROTECTION SYSTEM
ARCH	ARCHITECTURAL	MER	MECHANICAL EQUIPMENT ROOM
CT	COOLING TOWER	MECH	MECHANICAL
DWG	DRAWING	MTD	MOUNTED
E	EXISTING TO REMAIN	N	NEUTRAL

LIGHTNING PROTECTION NOTES

THE DESIGN & DETAILS SHOWN WILL MEET THE REQUIREMENTS OF UNDERWRITERS LABORATORY CODE 96/96A NATIONAL FIRE PROTECTION ASSOCIATION CODE 780 & THE LIGHTNING PROTECTION INSTITUTE CODE 175 FOR LIGHTNING PROTECTION SYSTEMS.

1. THE LIGHTNING PROTECTION SYSTEM AS SHOWN ON DRAWING HAS BEEN DESIGNED IN ACCORDANCE WITH UL96A & NFPA-780 LIGHTNING PROTECTION SYSTEM STANDARDS.
2. CONDUCTORS SHALL MAINTAIN A HORIZONTAL OR DOWNWARD COURSE, FREE FROM "U" OR "V" (DOWN AND UP) POCKETS.
3. NO BEND OF CONDUCTOR SHALL FORM AN ANGLE OF LESS THAN 90° NOR SHALL HAVE A RADIUS OF BEND LESS THAN 8".
4. AIR TERMINALS SHALL BE SPACED EVERY 20'-0" MAXIMUM APART. AIR TERMINALS SHALL BE LOCATED WITHIN 2'-0" OF OUTSIDE CORNERS.
5. JOBSITE CONDITIONS MAY REQUIRE ALTERATIONS IN AIR TERMINAL & CONDUCTOR LOCATIONS.
6. BARE COPPER MATERIALS SHALL NOT BE INSTALLED ON ALUMINUM OR GALVALUM SURFACES, AND ALUMINUM MATERIALS SHALL NOT BE INSTALLED ON COPPER SURFACES.
7. ALL LIGHTNING PROTECTION CONDUCTORS SHALL BE FASTENED EVERY 3'-0" MAX.
8. ALL BOLTS ON BOLT-PRESSURE CONNECTORS SHALL BE TORQUED AT 150 IN-LB.
9. ALL CONNECTIONS MUST BE USED WITH UL LISTED CABLE OF SAME METAL TYPE.
10. SMALL METALLIC BODIES OF INDUCTANCE SITUATED WITHIN 6'-0" OF A LIGHTNING CONDUCTOR OR ANOTHER BONDED METAL BODY SHALL BE INTERCONNECTED TO THE LIGHTNING CONDUCTOR SYSTEM, UNLESS INHERENTLY GROUNDED.
11. BOND ALL LARGE METAL BODIES TO THE MAIN LIGHTNING PROTECTION CONDUCTOR. (I.E.; EXHAUST FANS, ROOF VENTS, METAL COOLING TOWERS, HVAC UNITS, LADDERS, RAILINGS, ANTENNAS, SKYLIGHTS, METAL STACKS AND ANY OTHER LARGE METAL BODY WHOSE HEIGHT EXCEEDS THAT OF THE AIR TERMINAL IN USE, UNLESS PROTECTED BY HIGHER ROOF ELEVATIONS).
12. ALL MATERIALS SHOWN ARE MANUFACTURED BY HEARY BROS. LIGHTNING PROTECTION CO. INC. T. 716-941-6141 EMAIL: SALES@HEARYBROS.COM OR APPROVED EQUAL.

CONSTRUCTION PHASE NOTES:

1. BUILDING IS TO REMAIN OCCUPIED DURING THE COOLING TOWER REPLACEMENT. COORDINATE PHASING CONSTRUCTION WITH THE CORRESPONDING SCOPE OF WORK, AND BASE BID ACCORDINGLY.
2. REFER TO DRAWINGS G-100 AND G-101 FOR THE PROPOSED CONSTRUCTION PHASING PLANS.
3. CONSTRUCTION PHASING DIAGRAMS ARE INCLUDED FOR CLIENT COORDINATION AND TO FACILITATE COST ESTIMATING EFFORTS.
4. CONTRACTOR SHALL PRODUCE THEIR OWN CONSTRUCTION PHASING PLAN FOR REVIEW AND APPROVAL BY THE COMMISSIONER.

DOB APPROVAL STAMP

COOLING TOWER REPLACEMENT

BRONX DISTRICT ATTORNEY'S OFFICE
198 E 161ST STREET
NEW YORK, NEW YORK 10451

SPONSOR AGENCY:
DEPARTMENT OF CITYWIDE ADMINISTRATIVE SERVICES
MANHATTAN MUNICIPAL BUILDING
ONE CENTER STREET, 17 FLOOR SOUTH;
NEW YORK, NEW YORK 10007

MANAGING AGENCY:
DEPARTMENT OF DESIGN AND CONSTRUCTION
30-30 THOMSON AVENUE;
LONG ISLAND CITY, NEW YORK 10007

ARCHITECT:
NANDINEE PHOOKAN ARCHITECT
45 MAIN STREET SUITE #620
BROOKLYN NY 11201
P: 718 643 9500

STRUCTURAL ENGINEER:
LERA CONSULTING STRUCTURAL ENGINEERS
40 WALL STREET, FLOOR 23
NEW YORK, NY 10005
P: 212 750 9000

MEP ENGINEER:
DEWBERRY ENGINEERS
132 WEST 31ST STREET, SUITE 301
NEW YORK, NEW YORK 10001
P: 646 434 2822

PLUMBING ENGINEER:
AXON ENGINEERING SERVICES, LLC
222 OUTWATER LN, SUITE 3A
GARFIELD, NJ 07026
p: 917 677 2484

KEY PLAN:

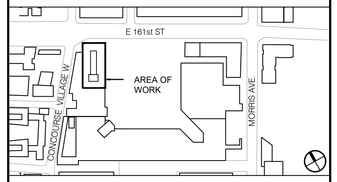

REVISIONS:

NUMBER	DESCRIPTION	DATE
	ISSUED FOR BID	01-27-2026

NYC DDC Department of Design and Construction

DIVISION OF PUBLIC BUILDINGS

CAPITAL PROJECT NUMBER:
PW77198CT

PROJECT
198 E 161ST STREET COOLING TOWER REPLACEMENT
198 E 161ST ST
BRONX, NY 10451

FOR THE:
Department of Citywide Administrative Services (DCAS)

DOB NOW APPLICATION: X01141830-I1

DRAWING TITLE:
ELECTRICAL LIGHTNING PROTECTION PLAN

SEAL & SIGNATURE

STATE OF NEW YORK · ALEXANDER ORLOV · 091796 · LICENSED PROFESSIONAL ENGINEER

DATE:	10 May, 2023
PROJECT NO:	22_01
DRAWN BY:	DK
CHECKED BY:	AO
DRAWING NUMBER:	EL-101.00
CADO FILE No:	01 OF 02

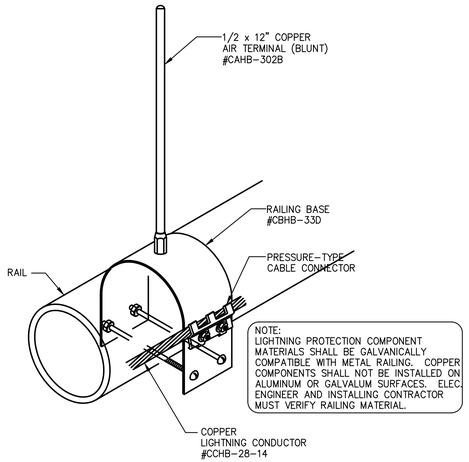

1 AIR TERMINAL AT RAILING
SCALE: NTS SYMBOL ● ATR

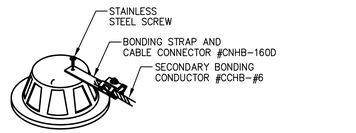

BOND TO ROOF DRAINS AND SMALL VENTS WHEN LOCATED WITHIN 6'-0" OF LIGHTNING CONDUCTOR OR OTHER GROUNDED METAL BODIES. TO BE DETERMINED AT JOB SITE.

BONDING LUG (METAL ROOF DRAINS)
NTS

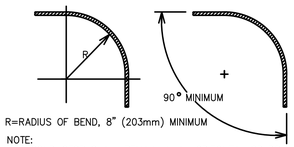

R=RADIUS OF BEND, 8" (203mm) MINIMUM

NOTE:
-LP CONDUCTOR SHALL REMAIN IN A HORIZONTAL OR DOWN-WARD PATH AVOIDING "U" & "V" POCKETS (DOWN & UP).
-NO BEND OF A CONDUCTOR SHALL FORM AN INCLUDED ANGLE OF LESS THAN 90° OR HAVE A RADIUS OF BEND LESS THAN 8".

8" MIN. RADIUS BEND OF CABLE

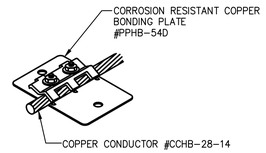

BONDING PLATE
NTS SYMBOL ■

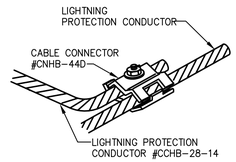

CABLE CONNECTOR
NTS

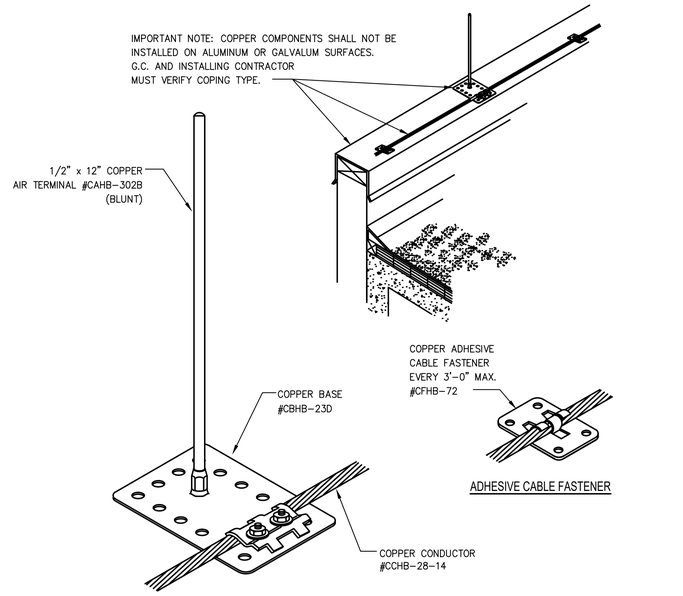

ADHESIVE CABLE FASTENER

NOTE:
ADHESIVE COMPOUND SHALL BE PROVIDED BY OTHERS-ELEC. CONTR. SHALL COORDINATE. THE ADHESIVE COMPOUND SHALL BE COMPATIBLE WITH THE SCREEN/ROOFING SYSTEM.

2 ADHESIVE TYPE AIR TERMINAL
SCALE: NTS SYMBOL ● AT

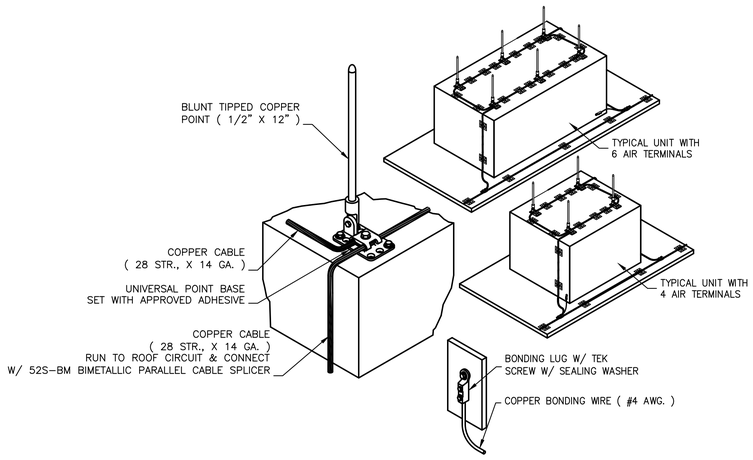

3 TYPICAL MECHANICAL UNIT AIR TERMINAL
SCALE: NTS

DOB APPROVAL STAMP

COOLING TOWER REPLACEMENT

BRONX DISTRICT ATTORNEY'S OFFICE
198 E 161ST STREET
NEW YORK, NEW YORK 10451

SPONSOR AGENCY:
DEPARTMENT OF CITYWIDE ADMINISTRATIVE SERVICES
MANHATTAN MUNICIPAL BUILDING
ONE CENTER STREET, 17 FLOOR SOUTH;
NEW YORK, NEW YORK 10007

MANAGING AGENCY:
DEPARTMENT OF DESIGN AND CONSTRUCTION
30-30 THOMSON AVENUE;
LONG ISLAND CITY, NEW YORK 10007

ARCHITECT:
NANDINEE PHOOKAN ARCHITECT
45 MAIN STREET SUITE #620
BROOKLYN NY 11201
P: 718.643.9500

STRUCTURAL ENGINEER:
LERA CONSULTING STRUCTURAL ENGINEERS
40 WALL STREET, FLOOR 23
NEW YORK, NY 10005
P: 212 750 9000

MEP ENGINEER:
DEWBERRY ENGINEERS
132 WEST 31ST STREET, SUITE 301
NEW YORK, NEW YORK 10001
P: 646 434 2822

PLUMBING ENGINEER:
AXON ENGINEERING SERVICES, LLC
222 OUTWATER LN, SUITE 3A
GARFIELD, NJ 07026
p: 917 677 2484

KEY PLAN:

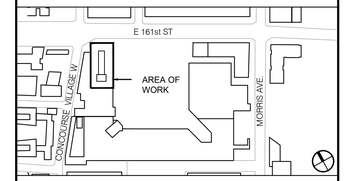

REVISIONS:

NUMBER	DESCRIPTION	DATE
	ISSUED FOR BID	01-27-2026

NYC DDC **Department of Design and Construction**

DIVISION OF PUBLIC BUILDINGS

CAPITAL PROJECT NUMBER:
PW77198CT

PROJECT
198 E 161ST STREET COOLING TOWER REPLACEMENT
198 E 161ST ST
BRONX, NY 10451

FOR THE:
Department of Citywide Administrative Services (DCAS)

DOB NOW APPLICATION: X01141830-I1

DRAWING TITLE:
ELECTRICAL LIGHTNING PROTECTION PLAN DETAILS

SEAL & SIGNATURE



DATE:	10 May, 2023
PROJECT NO:	22_01
DRAWN BY:	DK
CHECKED BY:	AO
DRAWING NUMBER:	EL-201.00
CADO FILE No:	
	02 OF 02