Pierce County
Finance & Enterprise Services
Procurement & Contract Services

1501 Market St., Suite 420
Tacoma, Washington 98402

(253) 798-7456 | FAX (253) 798-6699
Email: pccompliance@piercecountywa.gov

Julie Demuth
Director

ADDENDUM NO. 01 – BID NO. 2026-MPW-241

ADDENDUM DATE: October 9, 2026

TO ALL BIDDERS AND SUPPLIERS:

THIS ADDENDUM SHALL BE BECOME PART OF THE CONTRACT DOCUMENTS.

1. **Modification(s) are as follows:**

ADDENDUM 01

TO: BIDDERS AND SUPPLIERS FOR:

Bid No. 2026-MPW-241 Orangegate Park Phase 1 Site Improvements

FROM: Pierce County Public

Works Pierce County, WA

TO ALL BIDDERS AND SUPPLIERS:

THIS ADDENDUM SHALL BE ATTACHED TO THE INSIDE COVER OF THE PROJECT

MANUAL AND BECOME A PART OF THE TERMS OF THE CONTRACT DOCUMENTS.

ACKNOWLEDGE RECEIPT OF THIS ADDENDUM ON THE BID PROPOSAL

1. **Project Manual –** the following specifications have been revised. All revisions are shown in red in the attachments.

a. 01 01 10 Table of Contents – Revised specification list and number. See attached.

b. 03 30 00 Cast in Place Concrete – Revised specification number. See attached.

c. 13 34 00 Fabricated Engineered Structures – Revised sections 1.05 A 2.b, 2.02 A, and 2.03 A. See attached.

d. 32 31 13 Chain Link Fencing & Gates – Revised section 2.04 A. See attached.

e. 32 32 54 Rockery Wall – Revised specification number. See attached.

f. 33 40 00 Storm Drainage – Revised specification number. See attached.

2. Drawings – Changes have been to the following drawings. Changes are clouded and labeled with a revision triangle in the attachments. See attached.

a. G03 – OVERALL SITE PLAN

b. CE01 – TEMPORARY EROSION AND SEDIMENT CONTROL NOTES

c. CE03 – TEMPORARY EROSION AND SEDIMENT CONTROL PLAN

d. CE04 – TEMPORARY EROSION AND SEDIMENT CONTROL PLAN

e. CE07 – TESC DETAILS

f. CG01 – GRADING NOTES

g. CG04 – GRADING PLAN

h. CG05 – GRADING PLAN

i. CG09 – GRADING PROFILES

j. CD05 – STORM DRAINAGE PLAN

k. CD06 – STORM DRAINAGE PLAN

l. CD08 – STORM DRAINAGE ENLARGED VIEW

m. CD09 – STORM DRAINAGE ENLARGED VIEW

n. CD10 – STORM DRAINAGE ENLARGED VIEW

o. CD11 – POND SECTIONS

p. CD12 – POND SECTIONS

q. CD13 – POND SECTIONS

r. CD17 – STORM DRAINAGE PROFILES

s. CD18 – STORM DRAINAGE PROFILES

t. CD19 – STORM DRAINAGE PROFILES

u. CD20 – STORM DRAINAGE PROFILES

v. CD21 – STORM DRAINAGE PROFILES

w. CD22 – STORM DRAINAGE PROFILES

x. CD31 – STORM DRAINAGE DETAILS

y. CD34 – STORM DRAINAGE DETAILS

z. CP09 – PAVING DETAILS

aa. CP10 – ENTRY DRIVE ENLARGED VIEW

bb. CP12 – PEDESTRIAN CROSSING ENLARGED VIEW

cc. CP13 – PEDESTRIAN CROSSING ENLARGED VIEW

dd. SN01 – TRAFFIC SIGN SCHEDULE

ee. SN02 – TRAFFIC SIGN SCHEDULE

ff. SN03 – TRAFFIC SIGN AND STRIPING PLAN

gg. SN04 – TRAFFIC SIGN AND STRIPING PLAN

hh. SN05 – TRAFFIC SIGN AND STRIPING PLAN

ii. CW04 – WATER UTILITIES DETAILS

jj. E01 – ELECTRICAL LEGEND, NOTES AND SCHEDULES

kk. E03 – ELECTRICAL SITE PLAN

ll. E04 – ELECTRICAL SITE PLAN

mm. E05 – ELECTRICAL SITE PLAN

nn. E06 – ELECTRICAL SCHEDULES, DETAILS AND DIAGRAMS

oo. LD04 – DEMOLITION AND CLEARING PLANS

pp. LD05 – DEMOLITION AND CLEARING PLANS

qq. LS01 – SITE DESIGN SCHEDULE, LEGEND, NOTES & ABBV

rr. LS04 – SITE DESIGN PLAN

ss. LS05 – SITE DESIGN PLAN

tt. LS07 – SITE DESIGN ENLARGEMENT

uu. LS12 – SITE DESIGN DETAILS

vv. LP02 – PLANTING SCHEDULES, NOTES & LEGEND

ww. LP06 – PLANTING PLAN

3. **Appendices –** Changes have been to the following Appendices. Changes are clouded and labeled with a revision triangle in the attachments. See attached.

a. APPENDIX B: Romtec Restroom and Maintenance Building page 2A.

b. APPENDIX F: Temporary Project Sign

DIVISION 01 GENERAL CONDITIONS – Provided by Pierce County Parks & Recreation

01 01 10 TABLE OF CONTENTS

01 11 00 SUMMARY OF WORK

01 14 00 WORK RESTRICTIONS

01 23 00 ALTERNATES

01 26 00 CONTRACT MODIFICATION PROCEDURES

01 27 00 UNIT PRICES

01 29 00 PAYMENT PROCEDURES

01 29 73 SCHEDULE OF VALUES

01 31 00 PROJECT MANAGEMENT AND COORDINATION

01 32 00 CONSTRUCTION PROGRESS DOCUMENTATION

01 32 22 PHOTOGRAPHIC DOCUMENTATION

01 33 00 SUBMITTAL PROCEDURES

01 40 00 QUALITY REQUIREMENTS

01 41 13 REGULATORY REQUIREMENTS

01 42 00 REFERENCES

01 50 00 TEMPORARY FACILITIES AND CONTROLS

01 55 00 MAINTENANCE OF TRAFFIC

01 56 39 TEMPORARY TREE AND PLANT PROTECTION

01 60 00 PRODUCT REQUIREMENTS

01 61 13 BUILD AMERICA, BUY AMERICA REQUIREMENTS

01 70 00 EXECUTION REQUIREMENTS

01 73 29 CUTTING AND PATCHING

01 77 00 CLOSEOUT PROCEDURES

01 78 23 OPERATION AND MAINTENANCE DATA

01 78 39 PROJECT RECORD DOCUMENTS

DIVISION 2 EXISTING CONDITIONS

02 41 00 SITE DEMOLITION

DIVISION 3 CONCRETE

03 11 00 CONCRETE FORMWORK

03 20 00 CONCRETE REINFORCING

03 30 00 CAST IN PLACE CONCRETE

DIVISION 7 THERMAL AND MOISTURE PROTECTION

07 71 00 ROOF SPECIALTIES

DIVISION 10 SPECIALTIES

10 14 53 TRAFFIC SIGNAGE

DIVISION 11 EQUIPMENT

11 68 13 PLAYGROUND EQUIPMENT

DIVISION 13 SPECIAL CONSTRUCTION

13 34 23 FABRICATED STRUCTURES

DIVISION 26 ELECTRICAL

26 05 00 COMMON WORK FOR ELECTRICAL SYSTEMS

26 05 01 BASIC MATERIALS & METHODS FOR ELECTRICAL SYSTEMS

26 05 19 LOW-VOLTAGE ELECTRICAL POWER CONDUCTORS AND CABLES

26 05 26 GROUNDING AND BONDING

26 05 29 HANGERS AND SUPPORTS FOR ELECTRICAL SYSTEMS

26 05 33 RACEWAYS AND BOXES FOR ELECTRICAL SYSTEMS

26 05 41 UNDERGROUND ELECTRICAL CONSTRUCTION

26 05 48 SEISMIC CONTROLS FOR ELECTRICAL SYSTEMS

26 05 53 IDENTIFICATION FOR ELECTRICAL SYSTEMS

26 09 23 LIGHTING CONTROL SYSTEM

26 24 16 PANELBOARDS

26 26 53 ELECTICAL VEHICLE CHARGING EQUIPMENT – LEVEL 2

26 27 17 EQUIPMENT WIRING

26 56 19 EXTERIOR LIGHTING

DIVISION 31 EARTHWORK

31 00 00 EARTHWORK

31 05 16 AGGREGATES

31 20 00 EARTH MOVING

31 23 23 TRENCHING, BACKFILLING, AND COMPACTING FOR UTILITIES

31 24 00 EMBANKMENTS

31 25 00 EROSION AND SEDIMENT CONTROL

31 37 00 RIPRAP

DIVISION 32 EXTERIOR IMPROVEMENTS

32 12 16 ASPHALT PAVING

32 16 13 CURBS AND GUTTERS

32 17 00 PAVING SPECIALTIES

32 17 23 PAVEMENT MARKINGS

32 18 16.13 PLAYGROUND SURFACING

32 31 13 CHAIN LINK FENCING & GATES

32 31 29 SPLIT RAIL FENCE

32 32 54 ROCKERY WALL

32 33 00 SITE FURNISHINGS

32 50 00 LANDSCAPE BOULDERS

32 84 00 IRRIGATION

32 90 00 PLANTING

32 91 13 SOIL PREPARATION

32 92 19 SEEDING

DIVISION 33 UTILITIES

33 10 00 WATER DISTRIBUTION

33 30 00 SANITARY SEWER

33 32 00 ON-SITE SEWER SYSTEM

33 40 00 STORM DRAINAGE

APPENDICES

Appendix A Topographic & Tree Survey

Appendix B Romtec Restroom and Maintenance Building

Appendix C Romtec Picnic Shelters

Appendix D Pierce County Parks and Recreation – Sign Standards

Appendix E Play Equipment Installation

Appendix F Temporary Project Sign

Appendix G Geotechnical Report

Appendix H Special Provisions (Illumination & RRFB)

Appendix I Pierce County Inadvertent Discovery Plan

Appendix J WA State RCO Archaeological Monitoring Letter and Project-Specific MIDP

Appendix K Project Drainage Report

Appendix L Tacoma Power Electrical Service Quote Letter

End of Addendum No. 01

SECTION 03 30 00
CAST IN PLACE CONCRETE

PART 1 GENERAL

1.01 SUMMARY

A. Install cast in place concrete using the materials and proportioning as shown in the Contract Drawings and/or as specified in the Specifications.

1.02 SCOPE OF WORK

A. Furnish all materials, equipment, labor and related items necessary to complete the work shown in the Contract Drawings and/or as specified in the Specifications. The work included in this section (whether mentioned or not) shall consist of all labor, tools, materials, tests, permits and other related items necessary for the provision and installation of cast in place concrete in a first quality workmanlike manner.

1.03 REFERENCES

A. This specification section incorporates by reference the latest revisions of the following documents.
   1. ACI: American Concrete Institute:
      a. ACI 301: Structural Concrete for Buildings
      b. ACI 304: Guide for Measuring, Mixing, Transporting and Placing Concrete.
      c. ACI 305: Hot Weather Concreting.
      d. ACI 306: Cold Weather Concreting.
      e. ACI 308: Curing Concrete.
      f. ACI 309: Consolidation of Concrete.
   2. ASTM: American Society for Testing and Materials:
      a. ASTM C94: Ready-Mixed Concrete.
      b. ASTM C171: Sheet Materials for Curing Concrete
      c. ASTM C309: Liquid Membrane-Forming Compounds for Curing Concrete.
      d. ASTM C494: Chemical Admixtures for Concrete.
      e. ASTM C618: Fly Ash and Raw or Calcified Natural Pozzolan for Use as a Mineral Admixture in Portland Cement Concrete.
      f. ASTM D1751: Preformed Expansion Joint Fillers for Concrete Paving and Structural Construction (Nonextruding and Resilient Bituminous Types).
   3. NRMCA: National Ready Mixed Concrete Association.
   4. WSDOT: Washington State Department of Transportation – Standard Specifications for Road, Bridge, and Municipal Construction.

1.04 RELATED WORK

A. Related work in other sections of these Specifications includes but is not limited to:
   1. Specification 03 20 00, CONCRETE REINFORCING.
   2. Specification 03 11 00, CONCRETE FORMWORK.

1.05 QUALITY ASSURANCE

A. CONTRACTOR QUALIFICATIONS
   1. All work shall be performed by a licensed and bonded Contractor registered in the State of Washington and shall be qualified for concrete construction.

B. PLANT CERTIFICATION

1. The NRMCA certifies plants which can demonstrate that their facilities are capable of furnishing good concrete. The system permits a qualified plant to display a Certificate of Conformance which assures the purchaser that the physical capability of furnishing good concrete is available.
2. For plants which are certified by NRMCA, compliance will be assumed for production facilities within the limits set forth by ASTM C94. Applicable sections of ASTM C94 are as follows: 8. Measuring Materials, 9. Batching Plant, 10. Mixers and Agitators, 11. Mixing and Delivery, and 12. Use of Nonagitating Equipment. These sections provide assurance of facilities that are capable of furnishing good concrete.
3. All production facilities (scales, mixers, trucks, storage bins, conveyors, etc.) shall be continuously maintained in good working condition.
4. Use only concrete plants complying with ASTM C94 or NRMCA minimum standards.
5. Unless noted otherwise within this specification all workmanship shall be in conformation with Section 6-02 of the WSDOT Standard Specifications.

1.06 SUBMITTALS

A. Mix Identification.
   1. Submit a job mix formula at least 15 days prior to delivery of concrete to the job site.
   2. Upon approval of the job mix formula, a mix identification number will be assigned to the mix. This number shall become the identifying designation of that mix and, as such, shall be used in all references to that mix.
   3. Concrete delivered to the job stie shall be accompanied by a delivery slip bearing the assigned mix identification number, beginning batch time, revolutions counter with a non-zero reset, aggregate weight, mix ratio, and added water.
   4. A new job may mix be required if unsatisfactory results occur.

PART 2 PRODUCTS

2.01 CONCRETE IN A FRESHLY-MIXED AND UNHARDENED STATE

A. Concrete in a freshly-mixed and unhardened state shall comply with ASTM C94 except as expressly and specifically modified and designated herein. Modifications and designations shall be as follows:
   1. Cement (See ASTM C94 4.1.1) shall contain no more than 0.80 percent total alkalis (Na20+0.658 K20).
B. Pozzolan shall conform to ASTM C618 Class F or Class C. A Certificate of Compliance shall be provided on request. Total weight of Pozzolan shall not exceed 18 percent of the weight of cement.
C. Quality of concrete shall conform to ASTM C94 5.1.
D. Concrete of all classes shall be in conformance with requirements of section 6-02 of the WSDOT Standard Specifications.
E. All concrete sidewalk shall be Class 3000 air entrained unless otherwise shown on the drawings.
F. All concrete driveway shall be Class 4000 air entrained unless otherwise shown on the drawings.
G. All concrete curb and gutter shall be Class 3000 unless otherwise shown on the drawings.
H. All other concrete for the work shall be Class 4000 air entrained unless otherwise shown on the drawings.

2.02 JOINT FILLERS

A. Joint fillers shall comply with ASTM D1751.

2.03 GROUT

A. Metallic: One of the following, or equal, for general applications:
   1. “Embeco” (Master Builders Company)
   2. “Ferrolith G” (Sonneborn Building Products, Inc.)
   3. “Ferrotex” (National Pulverized Metals, Co., Chicago, Ill.)
B. Non-metallic: One of the following, or equal, for setting base plates:
   1. “Five Star Grout” (US Grout Corp.)
   2. “Sealtight 588” (W.R. Meadows, Inc.)
   3. “Upcon” (The Upcon Co.)
   4. “Masterflow 928” (Master Builders Co.)
C. Epoxy: One of the following, or equal, for setting equipment:
   1. “Sika-Dur Hi-Mod,” “Cement Epoxy” (Sika Chemical Corp.)
   2. “Five Star Epoxy Grout” (US Grout Corp.)
   3. “Ceilcote 648CP” (Ceilcote Co.)

2.04 CURING MATERIAL

A. Liquid Membrane Curing Compound: ASTM C309, Type 2, formulated to be removable after 28 days, and guaranteed not to affect the bond of applied finishes.
B. Polyethylene Sheeting: Of approved manufacture, 4 mils thick.
C. Reinforced Building Paper: ASTM C171.
D. A sample shall be made and provided to the Owner’s Representative 7 days prior to concrete work.

PART 3 EXECUTION

3.01 PREPARATION

A. Clean existing concrete surfaces thoroughly before placing abutting fresh concrete.

3.02 CONCRETE PLACEMENT, CONSOLIDATION, CURING, AND PROTECTION

A. Concrete shall be placed, consolidated, cured, and protected in accordance with American Concrete Institute recommended practice. The following ACI standards and reports are guides to good practice and shall be used by the Contractor:
   1. ACI 304: Recommended Practice for Measuring, Mixing, Transporting and Placing Concrete
   2. ACI 305: Hot Weather Concreting
   3. ACI 306: Cold Weather Concreting
   4. ACI 308: Recommended Practice for Curing Concrete
   5. ACI 309: Recommended Practice for Consolidation of Concrete

3.03 EMBEDDED ITEMS

A. Conform to ACI 301, Chapter 6
B. Accurately set anchorage devices and structural steel connections by line and transit and coordinate the locating of all anchorage devices to be set for the accommodation of the work of other trades.
C. Locate anchor bolts as shown on the drawings and on shop drawings. Obtain necessary templates for mechanical and electrical equipment as required for the proper setting of anchor bolts and other items.

3.04 PATCHING

A. Comply with ACI 301, Chapter 9 and Chapter 13, Paragraph 13.6.

3.05 FINISHING

A. Tilt-Up Panels: Cast panels with exterior face up. Give exterior face a light vertical broom finish. Cast a 2-foot by 2-foot test panel for approval. Exterior face shall match approved test panel.
B. Exposed Concrete Surfaces: Leave with a smooth finish, even textured, and free of blemishes. As soon as the face forms are removed, remove all fins and other projections carefully, level offsets and grind where necessary. Repair, replace and point and fill voids. Patch as specified above.

3.06 GROUTING

A. Remove loose concrete particles, dust, and any other material which would prevent bonding.
B. Perform surface preparation, mixing, placing, and finishing in accordance with the approved manufacturer’s printed instructions.

3.07 PAYMENT

A. Payment shall be full compensation for the entire scope of work within this section, including all operations necessary for the complete and proper installation of the cast in place concrete as well as the preparation, safety, and quality control measures.

END OF SECTION

SECTION 13 34 00
FABRICATED ENGINEERED STRUCTURES

PART 1 GENERAL

1.01 SUMMARY

A. Provide and install all fabricated structures hereinafter identified.

1.02 SCOPE OF WORK

A. Furnish all materials, equipment, labor, and related items necessary to complete the work shown in the Contract Drawings and/or as specified in the Specifications. The work included in this section includes:
   1. Picnic Shelters
   2. Restroom and Maintenance Building
   3. All other related items required to complete the work shown on the Contract Drawings and as specified in the Contract Specifications.

1.03 REFERENCES

A. This specification section incorporates by reference the latest revisions of the following documents.
   1. ASTM A307 – Standard Specification for Carbon Steel Bolts, Studs, and Threaded Rod 60,000 PSI Tensile Strength.
   2. ASTM B30 – Standard Specification for Copper Alloys in Ingot and Other Remelt Forms.
   3. ASTM A53 – Standard Specification for Pipe, Steel, Black and Hot-Dipped, Zinc-Coated, Welded and Seamless
   4. ASTM A123 – Standard Specification for Zinc (Hot-Dip Galvanized) Coatings on Iron and Steel Products.
   5. IBC – International Building Code, current version.
   6. All standards must include the latest additions and amendments as of the date of advertisement for bids.
   7. Comply with environmental agencies, building codes and other local requirements that are more stringent than the above.

1.04 QUALITY ASSURANCE

A. Before proceeding with any work, inspect the site, carefully check all grades, and verify all dimensions and conditions affecting the work. Notify the Owner's Representative of any discrepancy on line and level.
B. Fabricated structures work must be performed by a company with experience in work of similar scope and quality.
C. Adhere to building supplier's instructions for product storage and handling, assembly, installation, and maintenance.
D. Site reviews will be made by the Owner's Representative.
   1. Request Owner's Representative site review at least 48 hours in advance of the time review is required. Reviews for the following are required:
      a. Review of temporarily marked/staked locations and alignments of fabricated structures and/or foundations prior to installation.
      b. Substantial Completion of all work (development of physical punch list items).
      c. Physical Completion of all work (physical punch list items satisfactorily completed).

1.05 SUBMITTALS

A. For each product specified, submit the following for approval prior to delivery:
   1. Building supplier's product data including:
      a. Preparation instructions and recommendations.
      b. Storage and handling requirements and recommendations.
      c. Building supplier's written fabrication and installation instructions.
      d. Maintenance instructions.
      e. Building supplier warranties.
      f. Materials color and finish samples.
      g. Required certification letters.
   2. Submit shop drawings for review and submittal for Pierce County Commercial Building Permit by Owner's Representative. Approval of permit is required prior to delivery for the following:
      a. Picnic Shelters. Shop drawings, signed and stamped by the building supplier's engineer, for each picnic shelter must include the following:
         1) Concrete shelter footings.
         2) Structural component locations/positions, material types and dimensions, custom post details, structural calculations, and details of construction and assembly.
         3) Roofing details.
         4) Manufacturers' standard color chart of roofing colors to be selected by the owner representative.
         5) Construction/floor plans signed and stamped by the building supplier.
         6) Structural Plans and calculations signed and stamped by the building supplier.
         7) WA state energy code worksheets signed and stamped by the building supplier.
      b. Restroom and Maintenance Building. Shop drawings, signed and stamped by the building supplier's engineer, must include the following:
         1) Foundation, walls, openings, and all penetrations including doors, windows, and grating.
         2) All fixtures.
         3) All internal utilities including piping, conduit, electrical panels, receptacles, and ventilation.
         4) Roofing details.
         ~~5) Manufacturers' standard color chart of roofing colors to be selected by the owner representative.~~
         ~~6) Manufacturers' standard color chart of bathroom partition colors to be selected by the owner representative.~~
         7) Construction/floor plans signed and stamped by the building supplier.
         8) Structural Plans and calculations signed and stamped by the building supplier.
         9) WA state energy code worksheets signed and stamped by the building supplier.
         10) Gutter and downspout per Specification 07 71 00 Roof Specialties.

1.06 DELIVERY, STORAGE, AND HANDLING

A. Deliver and store fabricated structure items in accordance with building supplier's written recommendations. Handle all materials with sufficient care to prevent scratches to the finish and other damage.

1.07 ENVIRONMENTAL CONDITIONS

A. Do not install the fabricated structures or foundations during heavy rain, freezing temperature, or snowfall.

1.08 PROTECTION

A. Protect new work and work-in-progress from vandalism and damage that might be incurred by construction traffic, equipment, property, and persons.

1.09 PERMITS, CODES, AND REGULATIONS

A. The Contractor must obtain and pay for all necessary permits and fees as required by Local Authority and prevailing ordinances and/or codes.
B. The Contractor must keep fully informed and must comply with all existing laws, codes, ordinances, and regulations, which in any way affect the conduct of the work.

1.10 CONDUCT OF WORK

A. The Contractor must continuously maintain a competent superintendent or foreman during the progress of the work, with the authority to act for the Contractor in all matters pertaining to the work.
B. The Contractor must confine operations to the working areas allotted by the Owner for operations, including material and equipment storage.
C. The Contractor must progressively clean the work site of debris and rubbish as the work proceeds.

1.11 GUARANTEE PERIOD

A. Guarantee work of this Contract Specification section for one (1) year against all defects of materials and workmanship. The guarantee period begins after the date of Substantial Completion.
B. Repair any damage caused by settlement and defects at no cost to the Owner.

PART 2 PRODUCTS

2.01 HARDWARE

A. All hardware is per the building supplier.

2.02 PICNIC SHELTERS

A. Picnic Shelters must be 32’ x 40’ pre-engineered single slope steel post structure with Fabral metal roofing, Glulam rafters, Glulam beams, and Doulas Fir tongue and grove decking. As designed and supplied by Romtec, Inc.; 18240 North Bank Road, Roseburg, Oregon 97470. Contact Cody Dooley; cdooley@romtec.com; phone: (541) 496-3541; website: www.romtec.com. Refer to Appendix C.
    1. All building materials and hardware are as supplied by the building supplier.
    2. Color and finishes per Appendix C.
    3. Roofing color to be Fabral’s color “Light Grey” #889.
    4. Wood Sealant for all ceiling decking, glulam beams, posts, and extensions: Provide Waterproof, UV resistant, mildew resistant clear stain/sealer for exterior condition.
        a. Provide a minimum 2” by 2” sample swatch on specified wood deck material for Owner’s Representative review and approval prior to application.
B. Or approved equal.

2.03 RESTROOM AND MAINTENANCE BUILDING

A. Restroom and Maintenance building must be a CMU structure with Fabral metal roofing and include a single occupant unisex restroom, double occupant women’s and men’s restrooms,

sinks, toilets, urinal, restroom partitions, a mechanical storage room with a roll-up door, a drinking fountain, and interior & exterior LED lighting. As designed and supplied by Romtec, Inc.; 18240 North Bank Road, Roseburg, Oregon 97470. Contact Cody Dooley; cdooley@romtec.com; phone: (541) 496-3541; website: www.romtec.com. Refer to Appendix B.

1. All building materials, fixtures, and mounting hardware are as supplied by the building supplier as specified in Appendix B.
2. Roofing color to be Fabral's color "Light Grey" #889.
3. Bathroom partition color to be ~~reviewed and confirmed by Owner's Representative based on submitted manufacturer samples~~ ASI Global Partition's color "White" #9201.
4. Interior block wall finish shall be White Latex Epoxy Paint
   a. Rust-oleum - White Latex Epoxy Interior/Exterior Paint – Semi-Gloss
5. Concrete Slab Sealer:
   a. Oil Repellent Sealer: Ready to use, silane, siloxane and fluoropolymers blended water-based solution sealer, quick drying, low-odor, oil and water repellent, VOC compliant and compatible with chemically hardened floors, Petrotex, as manufactured by L & M Construction Chemicals, Inc., or approved.
   b. Cleaning Solution: Proprietary, mild, highly concentrated liquid concrete cleaner and conditioner containing wetting and emulsifying agents; biodegradable, environmentally safe and certified High Traction by National Floor Safety Institute (NFSI), FGS Concrete Conditioner, as manufactured by L & M Construction Chemicals, Inc., or approved. \
   c. Stain Guard Sealer: Ready to use, is a low odor, VOC compliant, topical sealer consisting of low molecular emulsified cross-linking, coupling polymers that effectively protect concrete and other natural stone floor surfaces from the damaging effects of staining, defacing and deterioration due to contaminant penetration, Permaguard SPS, as manufactured by L& M Construction Chemicals, Inc., or approved.
6. All doors to be capable of accepting BEST, dormakaba group standard security small format interchangeable core (SFIC) type cylinders, with seven-pin, 1C - 7-pin cores.
   a. Basis of design lockset for restroom doors shall be BEST 45H-7AB15H VIB 626 or approved equal.
   b. Lockset for maintenance room door shall be BEST 9KW3-7DEU15D C RQE 626 or approved equal.
      1) Provide pathway to and through door with transfer hinge so that electrical wire may be pulled in and connected to lockset in the future.
      2) See appendix B regarding provision of door position switch and pathway to it.
   c. Provide temp green cores and permanent cores for all doors.
   d. Coordinate keying with PC Parks and coordinate with Romtec for all hardware.
7. Wood Sealant for all decking, glulam beams, posts, and extensions: Provide Waterproof, UV resistant, mildew resistant clear stain and sealer for exterior condition.
   a. Provide a minimum 2" by 2" sample swatch on specified wood deck material for Owner's Representative review and approval prior to application.
8. Sealant for exterior CMU block: Use clear-drying, penetrating, water-based silicone emulsion for weatherproofing masonry materials and protecting them from graffiti attacks without altering their natural appearance.
   a. Physical and Performance Properties:
      1) Total Solids per ASTM D 2369: Fifteen (15) percent.
      2) Cleanability Level 2 per ASTM D7089.
      3) Comply with national, state, and district AIM VOC regulations.
      4) Build America, Buy America Act Compliant.

b. Provide a sample swatch on one side of a CMU block for Owner's Representative review and approval prior to application on the building.

9. Lenel Security Access Hardware: Product, Hardware, and wire by Pierce County. Contractor to provide conduit sized for wiring and hardware requirements based on Pierce County provided information. Contractor to request information from Pierce County and locate per field directive. See Appendix B of additional hardware information.
10. Other materials described in Romtec's package in Appendix B is by the building installer or by contractor (see sections 3 and 4 of Romtec drawings). These materials shall be supplied and installed by the prime contractor (or a subcontractor) including but not limited to:
    a. Masonry grout
    b. Wall rebar
    c. Electrical and plumbing rough in and installation
    d. Trim
    e. Joint sealant/caulk
    f. Switches and outlet
    g. Typical fasteners
11. See appendix B sheet 2A concerning supply and install of electric hand dryers and baby changing tables in each restroom.

B. Roof-edge drainage systems, gutter and downspouts per Specification 07 71 00 Roof Specialties
C. Or approved equal.

PART 3 EXECUTION

3.01 GENERAL

A. Verify installation conditions as satisfactory to receive work of this Section. Do not install until unsatisfactory conditions are corrected. Beginning work constitutes acceptance of conditions as satisfactory.
B. Temporarily mark alignment and locations of structures for review by Owner's Representative prior to installation. Incorrectly located work must be removed and/or replaced by the Contractor at no additional cost to the Owner.
C. Install structures rigid, plumb and true to lines and levels shown in contract drawings or per building supplier's written instructions.
D. All ends of bolts to be tamperproof.

3.02 SUBGRADE PREPARATION

A. Verify that subgrade has been properly compacted and compaction tests, if required, have been accomplished.

3.03 CAST-IN-PLACE CONCRETE

A. Cast-In-Place Concrete for fabricated structures footings and foundations must be per the sealed structural plan sets furnished by the supplier. Unless otherwise indicated, exposed concrete must have a medium broom finish.

3.04 SEALANT FOR EXTERIOR CMU BLOCK: ANTI-GRAFFITI COATING APPLICATION

A. Provide a test of each surface substrate that will receive treatment prior to full application.
B. Apply Anti-Graffiti Coating according to manufacturer's written instructions including cleaning and drying of substrate prior to application and protection of all surrounding items and areas prior to application.

C. Do not dilute the product.
D. Apply only in well-ventilated areas.
E. Observe safety and protection precautions per manufacturer's written labels and instructions during application and drying.
F. Preferred method of application is with low pressure, spray equipment. Use roller or brush for small scall applications or when spray applications are not appropriate or difficult.
G. Apply in coverage rate and coatings as recommended by manufacturer.
H. Protect treated surfaces from rain for minimum of 6 hours after application.
I. For work found defective because of improper preparation of surfaces or improper application of treatment or damage to unprotect adjacent surfaces or materials, make good the defect to the satisfaction of the Owner's Representative at Contractor's expense before final acceptance.

3.05 CLEAN-UP

A. Clean structures promptly after installation. Remove all residues, stains, scuffs, abrasions, and marks from the finished products in accordance with the building supplier's instructions. Do not use harsh or abrasive cleaning materials or methods that could damage finishes.
B. Touch-up and repair minor damages to the finish in accordance with building supplier's instructions and as approved by the Owner's Representative.
C. Remove and replace damaged components that cannot be successfully repaired as determined by the Owner's Representative.
D. Remove all metal, wood, and concrete slurry and debris, protective wrappings and coverings, and shipping materials from the project site.
E. Fully restore all areas of the site that were impacted by the installation activities.

END OF SECTION

SECTION 32 31 13
CHAINLINK FENCE & GATES

PART 1 GENERAL

1.01 SCOPE OF WORK

A. Furnish all labor, materials, and equipment required to construct and install fence and gate system as indicated on the drawings or specified herein.
B. Include all other related items required to complete the work shown on the Contract Drawings and as specified in the Contract Specifications.

1.02 QUALITY ASSURANCE

A. The Contractor must be experienced with chain-link fence installations. Provide at least 3 representative chain-link fence projects provided by and installed by Contractor for the Owner's Representative's review.
B. Thoroughly inspect the site and other related work. Notify the Owner's Representative prior to commencing installation of any conditions adversely affecting the performance of fence installation.
C. Provide a warranty stating that the fence is secure and stable, tight, corrosion-fee, in proper alignment, complete in detail and finish, and free of hazardous conditions. Any defects that develop within one year from the date of Substantial Completion shall be replaced at the expense of the Contractor.
D. Standard Specifications: All work shall conform to all applicable requirements of the following Specifications, whether specifically referred to or not, except as specifically modified herein.
    1. Comply with the requirements of the American Society for Testing and Materials (ASTM) especially the ASTM Committee F-14 Standards on Fences (latest edition).
    2. Perform all shop and field welding in accordance with the pertinent recommendations of the American Welding Society.
    3. Pipe ASTM A 53 – Standard Specification for Pipe, Steel, Black and Hot-Dipped, Zinc-Coated, Welded and Seamless.
    4. ASTM A 392 – Standard Specification for Zinc-Coated Steel Chain-Link Fence Fabric.
    5. ASTM F 626 – Standard Specification for Fence Fittings.
    6. ASTM F 668-88 – Standard Specification for Polyvinyl Chloride (PVC) Coated Chain Link Fence Fabric.
E. Site Inspections will be made by the Owner's Representative.
    1. Request Owner's Representative inspection at least 72 hours in advance of the time inspection is required. Inspections for the following are required:
        a. Preconstruction on-site conference: At least 21 days prior to commencement of work, schedule an on-site meeting with the Owner's Representative, Owner, and Contractor in attendance.
        b. Prior to the start of installation for Owner's Representative review of staked locations of chain-link fence and gates.
        c. During the initial installation of fence posts in forested areas.
        d. At 50% completion of installation.
        e. Substantial Completion of all work (development of physical punch list items).
        f. Physical Completion of all work (physical punch list items satisfactorily completed).

1.03 SUBMITTALS

A. Product Data. For each product specified, submit the following for approval prior to delivery:

1. Manufacturer's product data including:
   a. Preparation instructions and recommendations.
   b. Storage and handling requirements and recommendations.
   c. Material descriptions and shop drawings of fence and gate components with profiles and finishes for: posts, rails, latches, fittings, chain-link fabric, reinforcement, and attachments.

1.04 PRODUCT HANDLING

A. Provide new materials delivered to the site in undamaged condition. Store materials off the ground and protect materials from damage.
B. In the event of damage, immediately replace as necessary to the approval of the Owner's Representative.

PART 2 PRODUCTS

2.01 GENERAL

A. All piping for fence and gates shall be Schedule 40, hot-dipped galvanized steel, or approved equal, for size, finish, material composition, strength, appearance, performance and ease of maintainability.
B. Galvanizing shall be in accordance with ASTM F 668-88. All fence fittings shall comply with ASTM F 626-89a.
C. All materials except nuts, bolts, and washers shall have the PVC coating extruded and adhered to the galvanized steel core per ASTM F 668 Class 2a. Color to be black.

2.02 CHAIN LINK FENCE & GATE FABRIC

A. Chain link fence fabric shall be woven 9-gauge (finished gauge after vinyl coating) for fence and gates. All fabric shall have a galvanized steel wire core, in a continuous 2 inch mesh, with black vinyl coating extruded and bonded to the galvanized wire. Steel core wire shall have a minimum breaking strength 1290 lbs.
   1. Height of fabric as shown on the drawings.
   2. Fabric shall be installed on inside of posts (on inside of off-leash area).
   3. Lower edge of fabric shall be 2" to 4" above finished grade.
   4. Mesh shall have knuckled top and bottom selvage.

2.03 FENCES & FENCE POSTS

A. All post, rails, and framework shall have 10-15 mils of black vinyl coating. No hand painting, except for minor touch-up painting. Sizes shall be as specified in the following table:

Type	**4' Height**
Terminal / Corner Posts	2-3/8" OD
Line Posts	1-7/8" OD
Gate Posts	2-7/8" OD
Grate Framework	1-7/8 OD
Top Rails	1-5/8" OD
Mid Rails (at gates)	1-5/8" OD
Removable Posts	2-7/8" OD
Bottom Rails	1-5/8" OD

2.04 GATES & GATE POSTS

A. General: Gate posts with Kick-Plate, frames, and hardware shall be hot-dipped galvanized, as noted, for framework. All fittings, posts, kick-plate, and frames shall be galvanized after welding and black vinyl coated. Gates shall maintain a gap no greater than 2 inches between gateposts and frames or ground.
   1. Gate Frames: Shall be 1-7/8 inch OD steel pipe with joints notched and welded to form a rigid frame. Welds shall be coated with cold galvanized coating. Frames shall be filled with same fabric as fence and fastened in the frame by means of tension bars and tension bands.
   2. Hinges: Shall be pressed steel to suit gate size, black vinyl coated, non-lift-off type, offset to permit 180-degree gate opening. Provide 2 hinges for each leaf. Drill, tap, and set screw or weld to frame and post to prevent rotation. Hinges shall be Bulldog Industrial hinge, as supplied by Hoover Fence Co.; (800) 355-2335; or approved equal.
   3. Gate Latch: Provide heavy-duty gate fork latch, black vinyl coated, of correct size malleable iron to permit operation from either side of gate, with padlock eye as integral part of latch. Padlocks to be provided by Owner.
   4. Kick Plates: Shall be 1/8” thick plate with all cut edges eased and 90-degree corners with pre-drilled holes for mechanical connection.
   ~~5. Chain-link Gate Lock for Pedestrian Gate: K-BXMOR2 Weldable box; type: Mortise. With 45H7R15M-626 Mortise Lock. Lock or unlock from outside, always free to exit from inside. Provide two (2) keys. As manufactured by Best Access Systems. Supplied by Stanley Security Solutions; www.stanleysecuritysolutions.com; (206) 963-8933.~~

2.05 FITTINGS

A. Fittings shall be hot-dipped galvanized pressed steel in accordance with ASTM F 626. All fittings shall be industrial quality. All fittings except nuts, washers, and bolts shall be black vinyl coated after galvanizing, with 10-15 mils of thermally bonded PVC. Prior to installation, spray all nuts and bolts with two coats of black, flat alkyd enamel paint suitable for metal.

2.06 ACCESSORIES

A. Post tops shall be pressed steel and designed as a weather tight closure cap for tubular posts, and shall be black vinyl coated.
B. Tension bars shall be of one piece lengths equal to full height of fabric with a minimum cross section of 3/16” x 3/4”. Provide a black, vinyl coated tension bar for each gate, end post, and corner posts.
C. Tension bar bands (vinyl or powder coated), shall be pressed steel per ASTM F 626-89a spaced not over 12 inches OC to secure tension bars to end, corner, and gate posts.
D. Wire ties: 8-guage, black vinyl or powder coated, aluminum wire ties (with 9-guage core wire) on all fencing & gates, as shown on plans.

PART 3 EXECUTION

3.01 SITE PREPARATION

A. Temporarily mark locations of fence alignment and gate locations for review by Owner’s Representative prior to installation.
B. Verify installation conditions as satisfactory to receive work of this Section. Do not install until unsatisfactory conditions are corrected. Beginning work constitutes acceptance of conditions as satisfactory.

C. Install rigid, plumb, and true to lines and levels shown. Verify that all elements called for in this Section fit according to the Drawings, design intent, and existing site features.

3.02 FENCE CONSTRUCTION

A. Posts:
   1. Auger holes for post footings in firm, undisturbed or compacted soil. Holes for post footings shall be sized as shown on the Contract Drawings.
   2. Place concrete around posts in a continuous placement, tamp for consolidation, checking each post for vertical and top alignment. Support posts plumb until concrete has cured. Set and secure sleeves, and other accessories into concrete as required.
   3. Tops of post footings shall be flush with adjacent finished grade, troweled and sloped outward to drain. Top of footing shall appear true and circular in shape with post at center of circle.

B. Sleeved Posts:
   1. Insert gate posts into sleeves provided in concrete footing as shown in the Contract Drawings. Check each post for vertical (plumb) and top alignment.

C. Rails:
   1. Securely fasten the top rail to terminal posts and pass through tops of line post fittings, forming a continuous rail for the full length of fence. Furnish the top rail in lengths that are approximately 21 feet long with standard hot dip galvanized, black vinyl coated, steel expansion couplings not less than 6" in length. Do not use lengths less than 10 feet adjacent to terminal posts.
   2. Mid and bottom rails shall conform to the same specification as top rail.
   3. Joined mid and bottom rails at line posts with double-end socket clamps with one inverted to maintain smooth line.

D. Fabric: Pull fabric taut and tie to posts and rails. Anchor fabric to framework so that the fabric remains in tension after pulling force is released. Set the lower edge of fabric level with finished grades.

E. Wire Ties: Tie fabric to line posts, and rails at spacing shown in Contract Drawings.
   1. Tie fabric to tension wire with 7-gauge hog rings.
   2. Attach all wire ties per accepted industry standards and as described as follows: Attach hooked end of tie to fabric above and close to the top or side of the rail or post and wrap the end of tie under so that the wire tie locks into place and will not come loose under normal use. Then wrap the wire tie around the rail snugly and affix to fabric below and close to the rail and twist the end of the wire tie at least one full revolution around the fabric so that the tie will not come loose under normal use. Turn wire ties into fabric to avoid sharp burrs.

F. Tension Bars: Attach chain-link fabric to the terminal posts by means of single piece tension bars. Thread through fabric and secure to posts with metal tension bands.

G. Welding: All welds shall be fully filled, ground flush and smooth, and cold galvanized by brushing on 2 coats of black color paint for vinyl fencing.

3.03 GATES

A. Install gates as shown on the Contract Drawings. Openings between frame or gate members shall not exceed 2 inches.

B. Install gates plumb, level, and secure for full opening without interference. Adjust hardware for smooth operation and lubricate where necessary. After the Owner’s Representative approval of operation, drill, tap, and setscrew all hinges and latch hardware to prevent rotation.

3.04 CLEANUP

A. Clear the working area of all excess fencing and gate material (concrete, wire, rails, pipe, etc.).

END OF SECTION

SECTION 32 32 54
ROCKERY WALL

PART 1 GENERAL

1.01 DESCRIPTION

A. Provide all labor, materials, and equipment to procure and install the Rockery Wall work of the Contract, including incidentals related to that work and coordination and support of other work specified elsewhere in the Contract Documents.

1.02 QUALITY ASSURANCE

A. Single-Source Responsibility for rockery materials: Obtain boulders from a single quarry with resources to provide materials of consistent quality in appearance and physical properties, including the capacity to place the material without delaying the progress of the work.
B. Information on the Drawings and in the Specifications establishes the requirements for both aesthetic effects and performance of the rockery wall.
   a. Aesthetic effects relative to the formal characteristics are indicated by dimensions, arrangement, alignment, and profiles of components and assemblies as they relate to sight lines and relationships to one another and to adjoining construction;
   b. Performance is indicated by criteria subject to verification either by preconstruction or field test, if applicable, or by in-service experience.
C. Do not modify intended aesthetic effects, except with the Engineer's approval, and only to the extent exclusively needed to comply with the performance requirements. Where modifications are proposed, submit comprehensive explanatory data for review.
D. Installer Qualifications: Installer shall be an experienced rockery wall placement technician with at least 3 years of experience placing and forming rockery walls.
E. Site inspections will be made by the Owner’s Representative.
   a. Request Owner’s Representative inspection at least 48 hours in advance of the time inspection is required. Inspections for the following are required:
      i. Location of rockery wall staked in the field and subgrade preparation prior to installation of any boulders.
      ii. After partial construction of rockery wall is complete, showing full height.
      iii. Substantial Completion of all work (development of physical punch list items).
      iv. Physical Completion of all work (physical punch list items satisfactorily completed).

1.03 SUBMITTALS

A. Submit the following in accordance with Division 1 Specifications.
   1. Product data and source for boulders.

1.04 DELIVERY, STORAGE, AND HANDLING

A. Deliver boulder rock to the project site in undamaged condition. Store and handle the boulder rock to prevent their deterioration or damage due to moisture, temperature change, contaminants, corrosion, breaks, chipping, or other causes.
B. Store and handle the boulder rock and related materials to prevent their deterioration or damage due to moisture, temperature changes, contaminants, corrosion, breakage, chipping, or other causes
C. Do not use pinch or use wrecking bars.

D. Lift with wide-belt-type slings where possible; do not use wire rope or ropes containing tar or other substances that might cause staining.

PART 2 PRODUCTS

2.01 TYPE M (FILTER DRAIN ROCK) AGGREGATE

A. For use as drain rock behind rockery;
B. Use well rounded, clean, and washed Type M Aggregate; composed of hard, durable, sound pieces having a specific gravity of not less than 2.65. Conform to following gradation:

U.S. Standard Sieve Size	Percent Passing
4 inch	100
3 inch	80 – 100
1-1/2 inch	40 – 90
1 inch	20 – 65
3/4 inch	5 – 50
3/8 inch	0 – 15

2.02 TYPE N (FOUNDATION MATERIAL) AGGREGATE

A. For use as base aggregate under rockery wall;
B. Free of stones greater than 2-1/2 inches in the greatest dimension, free from clay and organic matter, moisture content that is less than the material's optimum value and compacts readily. Conform to following gradation:

U.S. Standard Sieve Size	Percent Passing
1-1/2 inch	99 – 100
1 inch	75 –100
5/8 inch	50 –100
No. 4	20 –80
No. 40	3 – 24
No. 200	10.0 maximum wet
Sand Equivalent	35 min

2.03 GEOTEXTILE FOR ROCKERY WALL

A. Provide nonwoven geotextile for rockery wall and conform to the following:

Property	Test	Requirements
AOS	ASTM D4751	No. 40 max.
Water permittivity	ASTM D4491	0.50 sec to 1 min
Grab Tensile Strength	ASTM D4632	115 lbs min
Grab Tensile Elongation	ASTM D4632	< 50%
Puncture	ASTM D6241	220 lbs min

2.04 ROCKERY WALL ROCK

A. Preselect boulders at the supplier's yard with approval by the Engineer prior to delivery to project site.
B. Provide rock that is as rectangular as possible, free from cracks, and substantial flaking and deterioration.
C. Granite Boulders: High Cascade Weathered Granite or approved equal.
Supplier: Marenakos Rock Center, Ph. (425) 392-3313.

Finish:	Naturally occurring
Size:	2 to 3 man rock per schedule on detail.

PART 3 EXECUTION

3.01 SELECTION AND PLACEMENT

A. Select and place rock such that there will be minimum voids and, in the exposed face, no open voids over 6 inches across in any direction. Provide a continuous appearance in the final course and place final course to minimize erosion of the backfill material.
B. Set the rockery to comply with the requirements indicated on the Drawings.
   1. Place the larger rocks at the base of the facing so that it will be stable and have a stable appearance.
   2. Place rocks in a manner such that the longitudinal axis of the rock shall be at right angles to the face.
   3. Inclined faces of rocks to slope to the back of the facing.
   4. Seat each course of rocks as tightly and evenly as possible on the course beneath.
   5. Place the rocks so that there are no continuous joint planes either horizontally or vertically.
   6. After setting each course of rock, chink all voids between the rocks on the back with quarry rock to eliminate any void sufficient to pass a two-inch square probe.
C. Replace broken, chipped, stained or otherwise damaged rockery until the methods and results are acceptable to the Engineer.

3.02 PROTECTION

A. Prevent staining of the rockery from caulking or paving materials. Immediately remove such materials from the rockery without damage to the latter.
B. Protect rockery from damage from construction machines and materials.
C. Clean rockery surfaces that have become dirty and stained prior to setting. Remove soil, stains, and foreign materials.

3.03 DISPOSAL OF EXCESS AND WASTE MATERIALS

A. Remove from the Owner's property, all waste materials, including unacceptable or unused excavated material, trash and debris, and dispose of it off site in a legal and timely manner.
B. Provide dump receipts from an approved dumpsite.

END OF SECTION

SECTION 33 40 00
STORM DRAINAGE

PART 1 GENERAL

1.01 SUMMARY

1.02 Install storm drainage structures, pipes, bioretention facilities, and detention pond using the materials as shown in the Contract Drawings and/or as specified in the Specifications.

1.03 SCOPE OF WORK

1.04 Furnish all materials, equipment, labor and related items necessary to complete the work shown in the Contract Drawings and/or as specified in the Specifications. The work included in this section (whether mentioned or not) consists of all labor, tools, materials, tests, permits and other related items necessary for the construction of storm drainage improvements.

1.05 REFERENCES

A. This specification section incorporates by reference the latest revisions of the following documents.
   1. Washington State Department of Transportation (WSDOT) Standard Specification for Road, Bridge and Municipal Construction.
   2. Pierce County Stormwater Manual

B. In case of conflict between the requirements of this specification section and the Contract Drawings, the requirements of the contract specification section shall prevail.

1.06 RELATED WORK

A. Related work in other sections of these Specifications includes but is not limited to:
   1. Specification 31 23 33 – TRENCHING, BACKFILLING, AND COMPACTING FOR UTILITIES

1.07 QUALITY ASSURANCE

A. Manufacturer and Installer's Qualifications: Firms regularly engaged in manufacture or installation of sewer projects consisting of similar scope and materials. Installer’s current certification from Pierce County Health Department.

B. General: Use adequate numbers of skilled workmen who are thoroughly trained and experienced in the necessary craft and who are completely familiar with the specified requirements and methods needed for proper performance of the work in this section.

1.08 SUBMITTALS

A. No installation of the material concern shall be made until written approval has been obtained from the Engineer. Approval of materials and equipment shall in no way obviate compliance with the plans and specifications.

B. Record drawings
   1. One complete set of drawings will be provided as record drawings which shall be separate, clean, blueline prints reserved for the purpose of showing a complete picture of the work as actually installed. The contractor shall coordinate the record drawing requirements with the Utility Inspector in accordance with the Developer Extension Agreement

2. These drawings shall also serve as work progress report sheets and the Contractor shall make any notations, neat and legible, thereon daily as work proceeds. These drawings shall be available for inspection at all times and shall be kept at the job.
3. All buried piping and indicated future connections, exterior of any building, shall be located both by depth and by accurate measurement from a permanently established landmark. All notations on record drawings of buried piping shall be made before any backfilling is started.
4. At completion of the work, these record drawings shall be signed by the Contractor, dated, and return to the Architect.

C. Storm Structure Verification Survey:
1. Contractor shall submit to the Architect an as-built survey, prepared by a Licensed Professional Surveyor, of each storm drainage structure installed by the Contractor during construction. Submit the survey on paper stamped by a Licensed Professional Surveyor and in digital format (AutoCAD). The storm structure verification survey shall include graphic horizontal location of the center of each structure (to the nearest tenth of a foot) relative to the property boundaries and right of ways (as prepared by the project surveyor) and the vertical elevations of all structure lids and grates and pipe inverts to the nearest five hundredths of a foot. Changes during construction to cleanout locations or elevations shall be noted on the Contractor's Record Drawing submittal.

PART 2 PRODUCTS

2.01 ADS N-12 PIPE (OR APPROVED EQUAL)

A. Pipe Requirements
1. ADS N-12 plain end pipe (per AASHTO) shall have a smooth interior and annular exterior corrugations.
a. Pipe shall meet AASHTO M252, Type S or AASHTO M294, Type S.

B. Joint Performance
1. Pipe shall be joined with coupling bands covering at least two full corrugations on each end of the pipe. Standard connections shall meet or exceed the soil-tight requirements of AASHTO M252, AASHTO M294, or ASTM F2306. Gasketed connections shall incorporate a closed-cell synthetic expanded rubber gasket meeting the requirements of ASTM D1056 Grade 2A2. Gaskets, when applicable, shall be installed by the pipe manufacturer.

C. Fittings
1. Fittings shall conform to AASHTO M252, AASHTO M294 or ASTM F2306.

D. Materials Properties
1. Virgin material for pipe and fitting production shall be high density polyethylene conforming with the minimum requirements of cell classification 424420C for 4- through 10-inch (100 to 250 mm) diameters, and 435400C for 12- through 60-inch (300 to 1500 mm) diameters, as defined and described in the latest version of ASTM D3350, except that carbon black content should not exceed 4%. The 12- through 60-inch (300 to 1500mm) virgin pipe material shall comply with the notched constant ligament-stress (NCLS) test as specified in Sections 9.5 and 5.1 of AASHTO M294 and ASTM F2306 respectively.

2.02 COUPLINGS AND JOINTS

A. Tees on existing pipe shall be connected by core drilling and flexible connections.
B. Pipe to pipe connections shall be made with a flexible gasketed coupling, adapter or coupling-adapter to make a watertight joint.

2.03 PIPE BEDDING AND BACKFILL MATERIAL

A. Bedding and backfill material shall conform to Section 31 05 16 “Aggregates” and the drawing details.

2.04 CONCRETE CATCH BASINS

A. Herringbone Grates: Per detail in the Drawings;
B. Type 1 Catch Basins: Per detail in the Drawings;
C. Type 2 Catch Basins: Per detail in the Drawings;
D. Concrete Inlet: Per detail in the Drawings;
E. Solid Cover: Per detail in the Drawings;
F. Beehive Grate: Per detail in the Drawings;
G. Control Structure: Per detail in the Drawings;
   1. Vertical Bar Grate;
   2. Stand Pipe.

2.05 DETECTABLE MARKING TAPE

A. Utility pipe tracer tape shall be per WSDOT Section 9-15.18.

2.06 BIORETENTION FACILITIES

A. Bioretention Soil Mix (BSM) Primary Layer
   1. Aggregate Gradation for BSM

Sieve Size	Percentage Passing
3/8-inch	100
No. 4	95 to 100
No. 10	75 to 90
No. 40	25 to 40
No. 100	4 to 10
No. 200	2 to 4

   2. The BSM Primary Layer media should be a blend of the following components in the following ratios:

Component	**Ratio (by volume)**
Filter Sand	70% (+/- 3%)
Coconut Coir Fiber	20% (+/- 2%)
High Carbon Wood Ash	10% (+/- 1%)

      a. Coconut Coir Fiber
         1) The Coconut Coir Fiber should be double rinsed and buffered, meeting the following requirements for quality:

Test/Method	Testing Responsibility	Criterion	Requirement

Synthetic Precipitation Leaching Protocol (EPA Method 1312) and EPA Method 353.2	Proponent	$NO_3 + NO_2$	0.15 mg/L (Max.)
Synthetic Precipitation Leaching Protocol (EPA Method 1312) and NEMI Method SM 4500-P E-99	Proponent	Total Phosphorus	0.15 mg/L (Max.)
		Ortho-Phosphorus	0.15 mg/L (Max.)
Synthetic Precipitation Leaching Protocol (EPA Method 1312) and EPA Method 200.8 UCT-KED	Proponent	Copper	10 $\mu g/L$ (Max.)
Test Methods for the Examination of Compost and Composting (TMECC) Method 04.10-A	Manufacturer	Electrical Conductivity	1.0 mmhos/cm (Max.)

b. Filter Sand

1) The aggregate shall be sand meeting the gradation below and the requirements of Section 9-03.1(2)B (Class 1) of the Washington State Department of Transportation Standard Specifications and shall have a Coefficient of Uniformity of four (minimum). The filter sand gradation tolerances herein apply to the aggregate in the HPBSM Primary Layer media as well as the HPBSM Polishing Layer media.

Sieve Size	**Percent Passing Min.**	**Percent Passing Max.**
3/8”	99	100
No. 4	95	100
No. 8	68	86
No. 16	47	65
No. 30	27	42
No. 50	9	20
No. 100	0	7
No. 200	0	2.5

2) The filter sand shall be thoroughly cleaned and free of dirt, clay, silt, asphalt, organic material, or other foreign matter and all aggregate passing the No. 200 sieve size shall be non-plastic. The filter sand shall meet the following requirements for quality:

Test / Method	Testing Responsibility [a]	Criterion	Requirement
Synthetic Precipitation Leaching Protocol (EPA Method 1312) and EPA Method 353.2	Proponent	NO3+NO2	0.15 mg/L (Max.)
Synthetic Precipitation Leaching Protocol (EPA Method 1312) and NEMI Method SM 4500-P E-99	Proponent	Total Phosphorus	0.15 mg/L (Max.)
		Ortho-phosphorus	0.15 mg/L (Max.)
Synthetic Precipitation Leaching Protocol (EPA Method 1312) and EPA Method 200.8 UCT-KED	Proponent	Copper	10 µg/L (Max.)

c. High Carbon Wood Ash (Biochar)
   1) The High Carbon Wood Ash (HCWA) should consist of screened and processed organic and inorganic residue remaining after the thermal processing of biomass in an oxygen-controlled environment. The biomass feed-stocks should be limited to clean cellulosic material from the 1) woody by-products of pacific northwest forestry operations (including cut residues left after a timber harvest, cut trees that are not marketable as lumber), 2) chipped trees and brush from biomass reduction operations (i.e. Commercial tree trimming), and 3) agricultural residues such as nut shells, straw, orchard pruning, seeds, hulls, and pits. The biomass feedstocks should not include any post-consumer or post-industrial sourced woody biomass (i.e., construction or demolition waste, wood contaminated with paints or sealers, metal, plastic, or other deleterious materials).
   2) The HCWA should be classified as a “class 1” biochar following the international biochar initiative (IBI) guidelines (IBI 2015).
   3) The HCWA should be sourced from a producer with at least 5-years of experience producing HCWA for soil amendments and/or water filtration and meet the following requirements for quality and grading:

Test / Method	Testing Responsibility [a]	Criterion	Requirement
Synthetic Precipitation Leaching Protocol (EPA Method 1312) and EPA Method 353.2	Proponent	NO3+NO2	0.15 mg/L (Max.)
Synthetic Precipitation Leaching Protocol (EPA Method 1312) and NEMI Method SM 4500-P E-99	Proponent	Total Phosphorus	0.15 mg/L (Max.)
		Ortho-phosphorus	0.15 mg/L (Max.)
Synthetic Precipitation Leaching Protocol (EPA Method 1312) and EPA Method 200.8 UCT-KED	Proponent	Copper	10 µg/L (Max.)
Total C and H analysis by dry combustion-elemental analyzer (EPA Method 440.0). Inorganic C analysis by determination of CO_2-C content with 1N HCl, as outlined in ASTM D4373 Standard Test Method for Rapid Determination of Carbonate Content of Soils. Organic C calculated as Total C – Inorganic C.	Manufacturer	Organic Carbon (C_{org})	60% (Min.)
		H: C_{org}	0.7 (Max.)
Proximate Analysis (ASTM D1762)	Manufacturer	Volatile matter	20% (Max.)
		Ash	40% (Max.)
Metals (EPA Method 6020)	Manufacturer	Arsenic	20 ppm (Max.)
		Cadmium	10 ppm (Max.)
		Lead	150 ppm (Max.)
		Mercury	8 ppm (Max.)
		Molybdenum	9 ppm (Max.)
		Nickel	210 ppm (Max.)
		Selenium	18 ppm (Max.)
		Zinc	1400 ppm (Max.)
Total polycyclic aromatic hydrocarbons by US EPA 8270 (2007) using Soxhlet extraction (US EPA 3540) and 100% toluene as the extracting solvent	Manufacturer	PAH	300 ppm (Max.)
Dioxins/Furans TEQ EPA 8290 (2007)	Manufacturer	PCDD/Fs	17 ppb WHO-TEQ [b] (Max.)
Cation Exchange Capacity (USEPA Method 9081)	Manufacturer	milliequivalents CEC/100 g dry soil	Report
Gradation (ASTM D422)	Manufacturer	# 6	100% Passing
		#100	10 % Passing (Max.)

Test / Method	Testing Responsibility [a]	Criterion	Requirement
Synthetic Precipitation Leaching Protocol (EPA Method 1312) and EPA Method 353.2	Proponent	NO3+NO2	0.1 mg/L (Max.)
Synthetic Precipitation Leaching Protocol (EPA Method 1312) and NEMI Method SM 4500-P E-99	Proponent	Total Phosphorus	0.1 mg/L (Max.)
	Proponent	Ortho-phosphorus	0.1 mg/L (Max.)
Synthetic Precipitation Leaching Protocol (EPA Method 1312) and EPA Method 200.8 UCT-KED	Proponent	Copper	1 µg/L (Max.)
Producer Analysis	Manufacturer	Iron Content by weight	80% - 97%
Gradation (ASTM D422) or Producer Analysis	Manufacturer	#4	100% passing
	Manufacturer	#8	95 -100% passing
	Manufacturer	#16	75-90% passing
	Manufacturer	#30	25-45% passing
	Manufacturer	#50	0-10% passing
	Manufacturer	#100	0-5% passing
	Manufacturer	#200	0-2.5% passing

B. Bioretention Underdrain Pipe Requirements
   1. Slotted, thick-walled plastic pipe must be used, minimum pipe diameter of 6 inches.
   2. Slotted subsurface drain PVC per Pierce County Design Guidelines and Public Works Standards and WSDOT Standard Specifications.
   3. Slots should be cut perpendicular to the long axis of the pipe and be 0.04 to 0.069 inches by 1-inch long and be spaced 0.25 inches apart (spaced longitudinally). Slots should be arranged in four rows spaced on 45-degree centers and cover one-half of the circumference of the pipe. Underdrain pipe slope must be no less than 0.5 percent.
   4. Pipe must be placed in filter material and have a minimum cover depth of 4 inches.
   5. Filter material shall meet the requirements of Pierce County Design Guidelines and Public Works Standards Drawing (bioretention section with underdrain).
   6. A 4-inch non-perforated cleanout must be connected to the underdrain every 300 feet minimum.

7. Underdrain mineral aggregate gradation:

Sieve Size	Percent Passing
¾ inch	100
¼ inch	30-60
US No. 8	20-50
US No. 50	3-12
US No. 200	0-1
Note: The above gradation is a Type 26 mineral aggregate as detailed for gravel backfill for drains in the City of Seattle Standard Specifications for Road, Bridge, and Municipal Construction.	

2.07 PLAYGROUND DRAIN SYSTEM

A. Underdrain Aggregate Materials
   1. Gravel Backfill for Drain: Shall conform to WSDOT Section 9-03.12(4) requirements.
   2. Permeable Ballast: shall conform to WSDOT Section 9-03.9(2).

B. Underdrain Pipe Requirements
   1. Perforated, thick-walled plastic pipe must be used, minimum pipe diameter of 4 inches.
   2. Perforated subsurface drain PVC shall meet the requirements of AASHTO M252 (standard specification for corrugated polyethylene drainage pipe).
   3. Perforations shall be 3/16 inch in diameter and shall be spaced every 1 foot (spaced longitudinally). Slots should be arranged in four rows spaced on 45-degree centers. Underdrain pipe slope must be no less than 0.5 percent.
   4. Pipe must be placed in filter material and have a minimum cover depth of 4 inches.
   5. Filter material shall meet the requirements of WSDOT Standard Specifications Section 9-03.12(4) (gravel backfill for drains).
   6. A 6-inch non-perforated cleanout must be connected to the underdrain every 300 feet minimum.

C. Fittings
   1. Fittings shall conform to AASHTO M252, AASHTO M294 or ASTM F2306.

2.08 LEVEL SPREADER

A. Quarry Spalls Requirements
   1. Stones shall consist of 4 inch to 2 inch uniformly graded coarse aggregate.
   2. Aggregate fill shall extend a maximum of 1 foot from edge of bentonite clay core while maintaining 6 inch minimum thickness of aggregate layer.

B. Jute Matting Requirements
   1. Matting fabric shall consist of 100% biodegradable woven fabric.
   2. Fabric shall be installed using 6 inch landscaping staples placed 3 feet apart.
   3. Where roll ends, fabric shall overlap 3 feet with landscaping staples 1/2 foot from fabric ends. The overlap shall be measured from landscaping staples.

2.09 ROUND DRAIN BASIN

A. PVC surface drainage inlets shall be of the curb inlet structure type as indicated on the contract drawings and referenced with in the contract specifications. The ductile iron frame, grate and hood for each of these structures are to be considered an integral part of the surface drainage inlet and shall be furnished by the same manufacturer. The curb inlet structure shall be as manufactured by Nyloplast a division OF Advanced Drainage Systems, Inc. or prior approved equal.

B. The curb inlet structure required for this contract shall be manufactured from PVC pipe stock, utilizing a thermos-molding process to reform the pipe stock to the specified configuration. The drainage pipe connection stubs shall be manufactured from PVC pipe stock and formed to provide a watertight connection with the specified pipe system. This joint tightness shall conform to ASTM D3212 for joints for drain and sewer plastic pipe using flexible elastomeric seals. The flexible elastomeric seals shall conform to ASTM F477. The pipe bell spigot shall be joined to the main body of the structure. The raw material used to manufacture the pipe stock that is used to manufacture the main body and pipe stubs of the surface drainage inlets shall conform to ASTM D1784 cell class 12454.
C. The grate, frame and hood for all curb inlets shall be ductile iron and shall be made specifically for each so as to prove a round bottom flange that closely matches the diameter of the PVC structure body. The grate, frame and hood shall be capable of supporting H-20 wheel loading for traffic areas. The hood section will have a solid black and be adjustable by use of three (3) locking hex head bolts. The metal used in the manufacture of the casting shall conform to ASTM A536 grade 70-50-05 for ductile iron.

PART 3 EXECUTION

3.01 EXAMINATION

A. Site and Drawings: Carefully examine the site and compare the drawings with existing conditions. By the act of submitting bids, the Contractor shall be deemed to have made such examination and to have accepted such conditions, and to have made allowance therefore in preparing his figure.
B. Verification of Existing Elevations: Verify all connection elevations prior to laying pipe.
C. Verification of Dimensions: Before proceeding with any work, the Contractor shall carefully check and verify all dimensions, sizes, etc. and shall assume full responsibility for the fitting-in of his equipment and to the structure. Where apparatus and equipment have been taken from typical equipment of the class indicated, the Contractor shall carefully check the drawings to see that the equipment he contemplates installing will fit into the spaces.

3.02 INSTALLATION

A. Drainage Structure: Construct catch basins, manholes, and other drainage structures at locations, and to the design and dimensions indicated. Set covers and grates flush with finished surface in paved and concrete areas or 3 inches above finished grade in landscaped areas. Exposed concrete work shall have a smooth troweled finish with rounded comers and edges finished plumb and true. Provide grates, frames, and covers for catch basins as detailed and indicated.
    1. The specified PVC structure drainage inlet shall be installed using conventional flexible pipe backfill materials and procedures. The backfill material shall be crushed stone or other granular material meeting the requirements of class 1, class 2, or class 3 material as defined in ASTM D2321. Bedding and backfill for the curb inlet structure shall be placed and compacted uniformly in accordance with ASTM D2321. The curb inlet structure body will be cut at the time of the final grade. No brick, stone, or concrete blocks will be required to set the grate to the final grade height. For H-20 load rated installation, a concrete ring will be poured under the frame, grate, and hood. The concrete slab must be designed taking into consideration local soil conditions, traffic loading, and other applicable design factors. For other installation considerations such as migration of fine, ground water, and soft foundations refer to ASTM 2321 guidelines.

B. ADS N-12 Pipe:
   1. Installation shall be in accordance with ASTM D2321 and ADS recommended installation guidelines, with the exception that minimum cover in trafficked areas for 4- through 48-inch (100 to 1200 mm) diameters shall be one foot. (0.3 m) and for 54- and 60-inch (1350 and 1500 mm) diameters, the minimum cover shall be 2 ft. (0.6 m) in single run applications.

C. Excavation, Bedding, and Backfill:
   1. Trenching: The length of trench excavation in advance of pipe laying shall be kept to a minimum and in no case shall exceed 100 feet unless specifically authorized by the Engineer.
   2. Excess excavated trench material shall be removed and disposed of off-site (per the conditions of all local ordinances and regulations for dumping/filling) or if deemed suitable by the Engineer, shall be placed adjacent to the trench in piles so that the toe of the slope is at least two feet from the edge of the trench. Free access shall be maintained to all fire hydrants, water valves, and meters.
   3. Where trench excavation equals or exceeds a depth of 4 feet, the contractor shall provide, construct, maintain and remove, as required, safety systems that meet the requirements of the Washington Industrial safety and Heal Act, RCW 49.17, including WAC 296-155.
   4. Excavation for structures: shall be in accordance with Section 7-05.3 of the Standard Specifications.
   5. Bedding: Bedding shall be installed in accordance with Standard Specification Section 7-04.3(1) of the Standard Specifications and the Contract Documents. Bedding shall provide uniform support along the entire pipe barrel, without load concentration at joint collars or bells. No blocking of any kind shall be used to adjust the pipe to grade except when used with embedment concrete. Bell holes shall be dug as required to ensure uniform support along the pipe barrel. Bedding disturbed by pipe movement or by removal of shoring or movement of a trench shield or box shall be reconsolidated prior to backfill.
   6. Laying Pipe: Shall be in accordance with Section 7-04.3(2) of the Standard Specifications. The contractor shall comply with manufacturer's recommended tolerance for eccentricity.
   7. Line and Grade: Variance from established line and grade shall not be greater than one thirty-second (1/32) of an inch per inch of pipe diameter and not to exceed one-half (1/2) inch, provided that such variation does not result in a level or reverse sloping invert; provided also, that variation in the invert elevation between adjoining ends of pipe, due to non-concentricity of joining surface and pipe interior surface, does not exceed one sixty-fourth (1/64) per inch of pipe diameter, or one-half (1/2) inch maximum.
   8. Connections: Connections to manholes shall be made in accordance with the drawings. Pipe branches, stubs or other open ends which are not to be immediately connected shall be capped or plugged.
   9. Backfill: Shall be in accordance with Section 7-04.3(3) of the Standard Specifications; material shall be per Section 31 05 16 "Aggregates". Backfill shall be placed in successive layers with the first layer not to exceed 2 feet above the pipe, and the following layers not exceeding 12 inches in loose thickness, with each layer compact to the required density. Trenches shall be backfilled as soon after the pipe laying as possible. Backfill trenches in the vicinity of catch basins, manholes, or other appurtenances will not be permitted until the masonry has become thoroughly hardened. Backfill above the pipe zone will be accomplished in such a manner that the pipe will not be shift out of position nor damaged by impact or overloading.

D. Miscellaneous
   1. Removal of Water: The contractor shall at all times provide and maintain ample means and devices to remove and dispose of all water entering the trench excavation during the process of laying the pipe.
   2. Preparation of Pipe: All pipe and fittings shall be carefully inspected before being laid and cracked, broken or defective pipe shall not be used in the work.

E. Restoration: At minimum, road paved areas shall be restored to existing thickness using like materials. Disturbed roadside-shoulders shall be restored with 6 inches of crushed surfacing top course. Disturbed cut and fill slopes shall be fertilized and re-seeded.

F. Re-vegetation: It shall be the Contractors responsibility to restore all disturbed areas to their original state. Rough grade compact earth, fine grade, place topsoil, fertilize and seed disturbed areas and perform all other necessary operations in accordance with specification section 31 20 00 (Earth Moving).

3.03 CLEANING AND TESTING

A. General: Cleaning and testing of the storm drainage conveyance piping systems shall be per Section 7-04.3(1) of the Standard Specifications. All new lines shall be subjected to testing aft installation. Tests shall be an exfiltration test or air pressure test. Conduct tests in the presence of the Owner's representative.

B. Cleanliness of Site: During progress of work, keep premises reasonably free of debris and waste materials.

C. Removal of Debris: Upon completion and before final acceptance of work, remove all debris, rubbish, left-over materials, tools, and equipment from site.

D. Prior to acceptance of work, each line and structure shall be cleaned to ensure that the entire system is clean and free of obstructions of any nature and provide written certification attesting thereto. Mechanically remove all sediment displaced from lines from the system, and do not flush downstream.

PART 4 PAYMENT

A. Payment shall be full compensation for the entire scope of work within this section, including all operations necessary for the complete installation of all storm drainage structures and components to the satisfaction of the project plans as well as the preparation, safety, and quality control measures.

END OF SECTION

REGION NO.	STATE	FEDERAL AID PROJECT NO.	SHEET NO.	TOTAL SHEETS
10	WA	*N/A*		

811 Know what's **below.** **Call** before you dig.

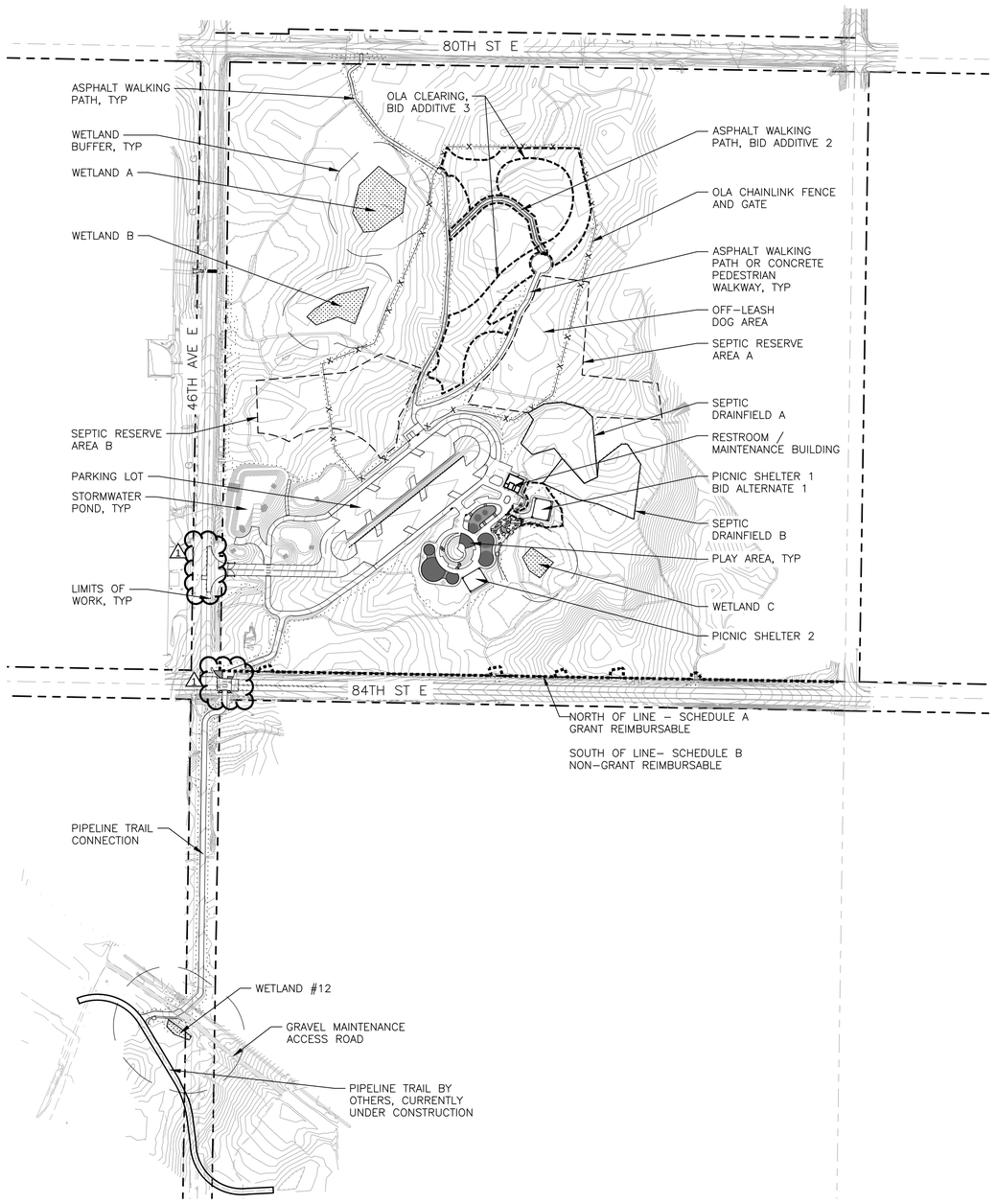

Drawing: P:\2022 PROJECTS\2022-33C ORANGEGATE PARK - PHASE 1 IMPROVEMENTS\GRAPHICS\AUTOCAD\L-GEN-PLOT.DWG Layout Tab: G-03 KEY PLAN
Xrefs: (DIESEL evaluation failed)
Date: 10/08/2026 Time: 03:25:24 PM Plotted by: CFOREST

HBB LANDSCAPE ARCHITECTURE

DESIGNED BY: *D. KOONTS*	*SURVEYED BY:*
DRAWN BY: *J. BAKKE*	*DATE SURVEYED:*
CHECKED BY: *J. VONG*	*DATE PLOTTED:* *October 8, 2026*

STATE OF WASHINGTON · MERIT OVIIR · JEFFREY C. VONG · 10/09/2026 · NO. 1396 EXP. 03/2027 · LICENSED LANDSCAPE ARCHITECT

NO.	DATE	REVISION	BY	APPROVED
1	10/09/2026	ADDENDUM 1	JB	DWK

Pierce County
Parks and Recreation Services
Lakewood Community Center
9112 Lakewood Drive SW
Lakewood, WA 98499
253.798.4081

BID SET

G03

ORANGEGATE PARK
PHASE 1 IMPROVEMENTS

OVERALL SITE PLAN

P-111031

REGION NO.	STATE	FEDERAL AID PROJECT NO.	SHEET NO.	TOTAL SHEETS
10	WA	*N/A*		

Know what's below. Call before you dig.

GENERAL NOTES (STREET CONSTRUCTION)

1. ALL WORKMANSHIP AND MATERIALS SHALL BE IN ACCORDANCE WITH THE PIERCE COUNTY STANDARDS AND THE MOST CURRENT COPY OF THE WSDOT/APWA STANDARD SPECIFICATIONS FOR ROAD, BRIDGE, AND MUNICIPAL CONSTRUCTION; IN CASES OF CONFLICT, THE MOST STRINGENT STANDARD SHALL APPLY.
2. THE CONTRACTOR SHALL BE IN COMPLIANCE WITH ALL SAFETY STANDARDS AND REQUIREMENTS AS SET FORTH BY OSHA, WISHA AND THE WASHINGTON STATE DEPARTMENT OF LABOR AND INDUSTRIES.
3. THE CONTRACTOR SHALL BE RESPONSIBLE FOR ALL TRAFFIC CONTROL IN ACCORDANCE WITH THE WSDOT/APWA STANDARD PLANS FOR ROAD, BRIDGE AND MUNICIPAL CONSTRUCTION (ALL APPLICABLE "K" PLANS) AND/OR THE MANUAL ON UNIFORM TRAFFIC CONTROL DEVICES (MUTCD). PRIOR TO DISRUPTION OF ANY TRAFFIC, A TRAFFIC CONTROL PLAN SHALL BE PREPARED AND SUBMITTED TO THE COUNTY FOR APPROVAL. NO WORK SHALL COMMENCE UNTIL ALL APPROVED TRAFFIC CONTROL IS IN PLACE.
4. ALL APPROVALS AND PERMITS REQUIRED BY PIERCE COUNTY SHALL BE OBTAINED BY THE CONTRACTOR PRIOR TO THE START OF CONSTRUCTION.
5. IF CONSTRUCTION IS TO TAKE PLACE IN OTHER JURISDICTION'S RIGHT-OF-WAY (I.E., THE COUNTY, THE STATE, THE CITY OF SUMMIT, OR OTHER ADJACENT MUNICIPALITIES), THE CONTRACTOR SHALL NOTIFY THE JURISDICTION AND OBTAIN ALL THE REQUIRED APPROVALS AND PERMITS.
6. A PRE-CONSTRUCTION MEETING SHALL BE HELD WITH THE PIERCE COUNTY CONSTRUCTION INSPECTOR A MINIMUM OF 72 HOURS PRIOR TO THE START OF CONSTRUCTION.
7. THE CONTRACTOR SHALL BE FULLY RESPONSIBLE FOR THE LOCATION AND PROTECTION OF ALL EXISTING UTILITIES. THE CONTRACTOR SHALL VERIFY ALL UTILITY LOCATIONS PRIOR TO CONSTRUCTION BY CALLING THE UNDERGROUND LOCATE LINE AT 1-800-424-5555 A MINIMUM OF 48 HOURS PRIOR TO ANY EXCAVATION.
8. IT SHALL BE THE RESPONSIBILITY OF THE CONTRACTOR TO HAVE A COPY OF AN APPROVED SET OF PLANS ON THE CONSTRUCTION SITE AT ALL TIMES.
9. ALL SURVEYING AND STAKING SHALL BE PERFORMED PER THE CORRESPONDING CHAPTER OF THE LATEST WSDOT DESIGN MANUAL.
10. TEMPORARY EROSION CONTROL/WATER POLLUTION PREVENTION MEASURES SHALL BE REQUIRED IN ACCORDANCE WITH SECTION 1-07.15 OF THE WSDOT/APWA STANDARD SPECIFICATIONS FOR ROAD, BRIDGE AND MUNICIPAL CONSTRUCTION AND THE DRAINAGE DESIGN AND EROSION CONTROL MANUAL FOR PIERCE COUNTY. AT NO TIME, WILL SILTS AND DEBRIS BE ALLOWED TO DRAIN INTO THE NEWLY INSTALLED STORM TREATMENT FACILITIES AND DETENTION FACILITY.
11. WHERE NEW ASPHALT JOINS EXISTING, THE EXISTING ASPHALT SHALL BE CUT OUT TO A NEAT VERTICAL EDGE AND TACKED WITH ASPHALT EMULSION TYPE FOR CRACK AND JOINT SEALING IN ACCORDANCE WITH SECTION 5-03 OF THE WSDOT/APWA STANDARD SPECIFICATIONS, THE NEW ASPHALT SHALL BE FEATHERED BACK OVER EXISTING TO PROVIDE FOR A SEAL AT THE SAWCUT LOCATION AND THE JOINT SEALED WITH GRADE AR-4000W ASPHALT.
12. COMPACTION OF SUBGRADE, ROCK, AND ASPHALT SHALL BE IN ACCORDANCE WITH THE MOST CURRENT ADOPTED VERSION OF THE WSDOT/APWA STANDARD SPECIFICATIONS FOR ROAD, BRIDGE AND MUNICIPAL CONSTRUCTION.
13. FORM AND SUBGRADE INSPECTION BY THE COUNTY IS REQUIRED BEFORE POURING CONCRETE. TWENTY-FOUR HOUR'S NOTICE IS REQUIRED FOR FORM INSPECTION.
14. SEE CONTRACT SPECIFICATIONS, SECTION 01 56 00 TEMPORARY BARRIER AND ENCLOSURES, FOR TESTING AND SAMPLING FREQUENCIES..
15. SEE CONTRACT SPECIFICATIONS, SECTION 10 14 53 TRAFFIC SIGNAGE AND 32 17 00 PAVING SPECIALTIES FOR SIGNING AND STRIPING REQUIREMENTS.

PIERCE COUNTY STANDARD STORMWATER NOTES:

1. ALL WORKMANSHIP AND MATERIALS SHALL BE IN ACCORDANCE WITH COUNTY STANDARDS AND THE MOST CURRENT COPY OF THE STATE OF WASHINGTON STANDARD SPECIFICATIONS FOR ROAD, BRIDGE, AND MUNICIPAL CONSTRUCTION (WSDOT/APWA) AND AS AMENDED BY THE COUNTY OR THE STATE.
2. TEMPORARY EROSION/WATER POLLUTION PREVENTION MEASURES SHALL BE REQUIRED IN ACCORDANCE WITH THE PIERCE COUNTY STORMWATER MANAGEMENT MANUAL AND THE DEPT. OF ECOLOGY'S CONSTRUCTION STORMWATER GENERAL PERMIT.

   SHOULD THE TEMPORARY EROSION AND SEDIMENTATION CONTROL MEASURES AS SHOWN ON THIS DRAWING NOT PROVE ADEQUATE TO CONTROL EROSION AND SEDIMENTATION, THE APPLICANT/CONTRACTOR SHALL INSTALL ADDITIONAL FACILITIES AS NECESSARY TO PROTECT ADJACENT PROPERTIES, SENSITIVE AREAS, NATURAL WATER COURSES, AND/OR STORM DRAINAGE SYSTEMS.
3. CALL THE UNDERGROUND LOCATE LINE 1-800-424-5555 A MINIMUM OF 48 HOURS PRIOR TO ANY EXCAVATIONS.
4. THE STORM DRAINAGE SYSTEMS SHALL BE CONSTRUCTED ACCORDING TO APPROVED PLANS ON FILE WITH THE COUNTY. ANY SIGNIFICANT DEVIATION FROM THE APPROVED PLANS WILL REQUIRE WRITTEN APPROVAL FROM THE COUNTY.
5. A COPY OF THE APPROVED CONSTRUCTION STORMWATER POLLUTION PREVENTION PLAN AND STORMWATER PLANS MUST BE ON THE JOB SITE WHENEVER CONSTRUCTION IS IN PROGRESS.
6. ALL EROSION CONTROL AND STORMWATER FACILITIES SHALL BE REGULARLY INSPECTED AND MAINTAINED BY THE DESIGNATED CERTIFIED EROSION AND SEDIMENT CONTROL LEAD (CESCLE) DURING CONSTRUCTION.
7. IT SHALL BE THE SOLE RESPONSIBILITY OF THE CONTRACTOR TO OBTAIN STREET USE AND OTHER RELATED OR REQUIRED PERMITS PRIOR TO ANY CONSTRUCTION ACTIVITY IN THE MUNICIPALITY'S RIGHT-OF-WAY. IT SHALL ALSO BE THE RESPONSIBILITY OF THE CONTRACTOR TO OBTAIN ALL REQUIRED PERMITS PRIOR TO ANY CONSTRUCTION. THE CONTRACTOR SHALL ABIDE BY ALL REQUIREMENTS FOR TRAFFIC CONTROL & SAFETY WHEN WORKING IN THE ROAD RIGHT-OF-WAY.
8. THE CONTRACTOR SHALL NOTIFY THE PROJECT ENGINEER IN THE EVENT OR DISCOVERY OF POOR SOILS, STANDING GROUNDWATER, OR SEVERE DISCREPANCIES FROM SOIL LOG DESCRIPTIONS AS NOTED ON THE PLANS.
9. FOR PUBLIC SYSTEMS, THE CONTRACTOR SHALL CALL FOR INSPECTION 48 HOURS PRIOR TO COVERING ANY DRAINAGE STRUCTURE.
10. ALL DRAINAGE STRUCTURES, SUCH AS CATCH BASINS AND MANHOLES, NOT LOCATED WITHIN A TRAVELED ROADWAY OR SIDEWALK, SHALL HAVE SOLID LOCKING LIDS. ALL DRAINAGE STRUCTURES ASSOCIATED WITH A PERMANENT RETENTION/DETENTION FACILITY SHALL HAVE SOLID LOCKING LIDS.

CONSTRUCTION REQUIREMENTS

1. ALL BMP NUMBERS CORRESPOND TO THE DEPARTMENT OF ECOLOGY STORMWATER MANAGEMENT MANUAL FOR WESTERN WASHINGTON AND SHALL BE INSTALLED, MAINTAINED, AND REMOVED IN ACCORDANCE WITH SAID MANUAL.
2. CONTRACTOR SHALL INSTALL STABILIZED CONSTRUCTION ENTRANCES AT ACCESS POINTS TO THE WORK AREAS OR AS DIRECTED BY THE ENGINEER.
3. STOCKPILE LOCATIONS SHALL BE AS DETERMINED BY THE CONTRACTOR.
4. CONTRACTOR SHALL MAINTAIN MATERIALS ON-SITE IN AN AREA EASILY ACCESSIBLE.
5. SAMPLING LOCATIONS TO BE FIELD LOCATED BY CERTIFIED EROSION AND SEDIMENT CONTROL LEAD.
6. ALL EROSION CONTROL MEASURES SHALL BE INSTALLED PRIOR TO ANY DEMOLITION.
7. STORM DRAIN INLET PROTECTION SHALL BE INSTALLED WITH INSTALLATION OF ALL PROPOSED CATCH BASINS.
8. ALL TREE PROTECTION AREAS SHALL HAVE PROTECTIVE BARRIER FENCES ERECTED AT DIRECTION OF PIERCE COUNTY PROFESSIONAL FORESTER. THE FENCES SHALL BE MADE OF ORANGE MESH PLASTIC AND SUPPORTED BY AT LEAST 5/8THS REBAR, OR APPROVED EQUAL, SPACED A MAXIMUM 10-FEET APART.
9. UNLESS OTHERWISE SPECIFIED, REMOVAL OF TREES SHALL INCLUDE THE REMOVAL OF STUMPS AND BACKFILLING THE VOIDS LEFT BY THE REMOVAL OPERATION WITH ONSITE NATIVE SOILS.

STANDARD NOTES FOR CONSTRUCTION STORMWATER POLLUTION PREVENTION PLAN FROM STORMWATER & SITE DEVELOPMENT MANUAL

1. APPROVAL OF THIS CONSTRUCTION SWPPP DOES NOT CONSTITUTE AN APPROVAL OF PERMANENT ROAD OR DRAINAGE DESIGN (E.G., SIZE AND LOCATION OF ROADS, PIPES, RESTRICTORS, CHANNELS, RETENTION/DETENTION/INFILTRATION FACILITIES, UTILITIES, ETC.)
2. THE IMPLEMENTATION OF THIS CONSTRUCTION SWPPP AND THE CONSTRUCTION, MAINTENANCE, REPLACEMENT, AND UPGRADING OF THESE CONSTRUCTION SWPPP FACILITIES IS THE REPSONSIBILITY OF THE APPLICANT/CONTRACTOR UNTIL ALL CONSTRUCITON IS COMPLETED AND APPROVED AND VEGETATION/LANDSCAPING IS ESTABLISHED.
3. THE BOUNDARIES OF THE CLEARING LIMITS SHOWN ON THIS PLAN SHALL BE CLEARLY FLAGGED IN THE FIELD PRIOR TO CONSTRUCTION. DURING THE CONSTRUCTION PERIOD, NO DISTURBANCE BEYOND THE FLAGGED CLEARING LIMITS SHALL BE PERMITTED. THE FLAGGING SHALL BE MAINTAINED BY THE APPLICANT/CONTRACTOR FOR THE DURATION OF CONSTRUCTION.
4. THE CONSTRUCTION SWPPP FACILITIES SHOWN ON THIS PLAN MUST BE CONSTRUCTED IN CONJUNCTION WILL ALL CLEARING AND GRADING ACTIVITIES, AND IN SUCH A MANNER AS TO ENSURE THAT SEDIMENT AND SEDIMENT LADEN WATER DO NOT ENTER THE DRAINAGE SYSTEM, ROADWAYS, OR VIOLATE APPLICABLE WATER STANDARDS.
5. THE CONSTRUCTION FACILITIES SHOWN ON THIS PLAN ARE THE MINIMUM REQUIREMENTS FOR ANTICIPATED SITE CONDITIONS. DURING THE CONSTRUCTION PERIOD, THESE CONSTRUCTION SWPPP FACILITIES SHALL BE UPGRADED AS NEEDED FOR UNEXPECTED STORM EVENTS AND TO ENSURE THAT SEDIMENT AND SEDIMENT LADEN WATER DO NOT LEAVE THE SITE.
6. THE CONSTRUCTION SWPPP FACILITIES SHALL BE INSPECTED DAILY BY THE APPLICANT/CONTRACTOR AND MAINTAINED AS NECESARY TO ENSURE THEIR CONTINUED FUNCTIONING.
7. THE CONSTRUCTION SWPPP FACILITIES ON INACTIVE SITES SHALL BE INSPECTED AND MAINTAINED A MINIMUM OF ONCE A MONTH OR WITHIN 48 HOURS FOLLOWING A MAJOR STORM EVENT.
8. AT NO TIME SHALL MORE THAN 1-FOOT OF SEDIMENT BE ALLOWED TO ACCUMULATE WITHIN A TRAPPED CATCH BASIN. ALL CATCH BASINS AND CONVEYANCE LINES SHALL BE CLEANED PRIOR TO PAVING. THE CLEANING OPERATION SHALL NOT FLUSH SEDIMENT LADEN WATER INTO THE DOWNSTREAM SYSTEM.
9. STABILIZED CONSTRUCTION ENTRANCES SHALL BE INSTALLED AT THE BEGINNING OF CONSTRUCTION AND MAINTAINED FOR THE DURATION OF THE PROJECT. ADDITIONAL MEASURES MAY BE REQUIRED TO ENSURE THAT ALL PAVED AREAS ARE KEPT CLEAN FOR THE DURATION OF THE PROJECT.

TESC LEGEND

- LIMITS OF WORK
- SF — SILT FENCE
- SW — STRAW WATTLES
- EDGE OF LANE
- OHP — OVERHEAD POWER
- UPH — UNDERGROUND PHONE
- TEMPORARY PROTECTION FENCE, SEE LD01
- C — CUT
- F — FILL

1

DAVID SYEN'S PE SEAL APPLIES ONLY TO ADDENDUM 1 REVISIONS CONTAINED IN SECTIONS CE, CG, CD, CP, SN, AND CW PLAN SHEETS.

10/09/2026

Drawing: C:\BMS\SKILLINGS-PW-01\TRISTAN ROBERTSON\DMS12837\23014_PS_NT.DWG Layout Tab: 23014_DE_EC_NOTES
Xrefs: PC PARKS TITLEBLOCK.DWG / 23014_TESC CONTAINER.DWG / 23014_BP_EC.DWG / X-DEMO.DWG
Date: 10/09/2026 Time: 09:17:23 AM Plotted by: TRISTANROBERTSON

SKILLINGS

DESIGNED BY:	SURVEYED BY:
S. MOLAMPHY	R. EDWARDS
DRAWN BY:	DATE SURVEYED:
S. MOLAMPHY	October 9, 2026
CHECKED BY:	DATE PLOTTED:
T. SKILLINGS	Oct 9, 2026

THOMAS E. SKILLINGS — STATE OF WASHINGTON — 17952 — REGISTERED PROFESSIONAL ENGINEER — 10/09/2026

NO.	DATE	REVISION	BY	APPROVED
1	10/09/26	ADDENDUM 1		

Pierce County
Parks and Recreation Services
Lakewood Community Center
9112 Lakewood Drive SW
Lakewood, WA 98499
253.798.4081

BID SET

CE01

ORANGEGATE PARK
PHASE 1 IMPROVEMENTS

TEMPORARY EROSION AND SEDIMENT CONTROL NOTES

P-111031

REGION NO.	STATE	FEDERAL AID PROJECT NO.	SHEET NO.	TOTAL SHEETS
10	WA	*N/A*		

811 Know what's below. Call before you dig.

MATCHLINE; SEE SHEET CE02

OWNER TO ADDRESS ALL SOFT SURFACE TRAILS WITHIN PROJECT, UNLESS REQUIRED FOR NEIGHBORHOOD CONNECTION.

LIMIT OF WORK

SEE LD01 THROUGH LD05 FOR TREE PROTECTION

SILT FENCE ANGLE POINT
N: 680255.25
E: 1176494.41

END SILT FENCE
N: 680188.24
E: 1176708.90

NIC; OWNER WILL ADDRESS TEMPORARY AND PERMANENT CONNECTIVITY OF EXISTING TRAIL, TYP.

PROPOSED CONDITION STORMWATER OUTFALL

SILT FENCE ANGLE POINT
N: 680168.27
E: 1176424.43

SILT FENCE ANGLE POINT
N: 680127.59
E: 1176417.05

SEE SHEET CE01 FOR NOTES AND TESC LEGEND.

SILT FENCE ANGLE POINT
N: 680065.72
E: 1176419.62

BEGIN SILT FENCE
N: 680041.45
E: 1176181.56

SEDIMENT TRAP
MINIMUM 490 SF
SEE DETAIL 9 AND 10 SHEET CE09

SILT FENCE ANGLE POINT
N: 680009.78
E: 1176395.77

BEGIN SILT FENCE
N: 679936.17
E: 1176603.66

SILT FENCE ANGLE POINT
N: 679937.09
E: 1176255.03

SEPTIC RESERVE AREA A

SEPTIC RESERVE AREA B

INTERCEPTION DITCH
MINIMUM 1% SLOPE TO SEDIMENT TRAP,
SEE DETAIL 11 SHEET CE09

46TH AVE E

N0° 54'19"E 1317.17

NORTH

SCALE 0' 15' 30' 60'

MATCHLINE; SEE SHEET CE04

Drawing: C:\BMS\SKILLINGS-PW-01\TRISTAN ROBERTSON\DMS12837\23014_PS_EC.DWG Layout Tab: 23014_PS_EC
Xrefs: 23014_BP_EX_TOPO.DWG / 23014_BP_EC.DWG / X-BASE.DWG / 23014_BP_DR.DWG / X-DEMO.DWG / PC PARKS TITLEBLOCK.DWG / 23014_BP_SEP.DWG / 23014_BP_SWPPP.DWG / 23014_BP_TESC.DWG / 23014_BP_GR.DWG / 23014_BP_UT.DWG / 23014_BP_PROFILE.DWG / 23014_BP_PROFILE2.DWG / 23014_BP_BY OTHERS_PIPELINE2.DWG
Date: 10/09/2026 Time: 09:20:36 AM Plotted by: TRISTANROBERTSON

SKILLINGS

DESIGNED BY:	SURVEYED BY:
S. MOLAMPHY	R. EDWARDS
DRAWN BY:	DATE SURVEYED:
S. MOLAMPHY	October 9, 2026
CHECKED BY:	DATE PLOTTED:
T. SKILLINGS	Oct 9, 2026

THOMAS E. SKILLINGS — STATE OF WASHINGTON — 17952 — REGISTERED PROFESSIONAL ENGINEER — 10/09/2026

NO.	DATE	REVISION	BY	APPROVED
1	10/09/26	ADDENDUM 1		

Pierce County
Parks and Recreation Services
Lakewood Community Center
9112 Lakewood Drive SW
Lakewood, WA 98499
253.798.4081

BID SET

CE03

ORANGEGATE PARK
PHASE 1 IMPROVEMENTS

TEMPORARY EROSION AND SEDIMENT CONTROL PLAN

P-111031

REGION NO.	STATE	FEDERAL AID PROJECT NO.	SHEET NO.	TOTAL SHEETS
10	WA	N/A		

811 Know what's below. Call before you dig.

MATCHLINE; SEE SHEET CE03

EXISTING CONDITION STORMWATER OUTFALL

SILT FENCE ANGLE POINT
N: 679642.78
E: 1176062.63

SILT FENCE ANGLE POINT
N: 679709.49
E: 1176071.95

SILT FENCE ANGLE POINT
N: 679746.49
E: 1176098.21

SEPTIC RESERVE AREA B

SILT FENCE ANGLE POINT
N: 679740.37
E: 1176201.53

SILT FENCE ANGLE POINT
N: 679725.21
E: 1176239.43

SILT FENCE ANGLE POINT
N: 679746.31
E: 1176315.93

SILT FENCE ANGLE POINT
N: 679702.37
E: 1176344.08

STOCKPILE AREA

INTERCEPTION DITCH
MINIMUM 1% SLOPE TO SEDIMENT TRAP,
SEE DETAIL 11 SHEET CE09

LIMITS OF WORK

SEPTIC DRAINFIELD AREA A

SEPTIC DRAINFIELD AREA B

INTERCEPTION DITCH
MINIMUM 1% SLOPE TO SEDIMENT TRAP,
SEE DETAIL 11 SHEET CE09

12" DI CULVERT
N: 679579.02
E: 1176054.16
IE: 388.54

SILT FENCE ANGLE POINT
N: 679556.75
E: 1176071.44

SILT FENCE ANGLE POINT
N: 679636.59
E: 1176280.53

SILT FENCE ANGLE POINT
N: 679596.73
E: 1176687.68

SILT FENCE ANGLE POINT
N: 679548.41
E: 1176674.79

END SILT FENCE
N: 679607.07
E: 1176779.47

BEGIN/END SILT FENCE
N: 679531.26
E: 1176082.06

100'

24'

50'

SILT FENCE ANGLE POINT
N: 679552.19
E: 1176277.46

SILT FENCE ANGLE POINT
N: 679527.71
E: 1176258.52

SEE LD01 THROUGH LD05 FOR TREE PROTECTION

SILT FENCE ANGLE POINT
N: 679505.65
E: 1176684.87

PLACE CONSTRUCTION ENTRANCE
SEE DETAIL 3 SHEET CE07

INSTALL PERMANENT CULVERT.
SIZE FOR PERMANENT ENTRANCE, SEE SHEET CD06 FOR CULVERT DETAIL AND CD23 FOR CULVERT PROFILE. SEE DETAIL 3 SHEET CE07

12" DI CULVERT
N: 679459.03
E: 1176055.47
IE: 390.04

SEDIMENT TRAP
MINIMUM 450 SF
SEE DETAIL 9 AND 10 SHEET CE09

BEGIN SILT FENCE
N: 679415.54
E: 1176607.98

NOTES:
1. SEE SHEET CE01 FOR NOTES AND TESC LEGEND.
2. PLACE STRAW WATTLES AT TOP AND BOTTOM OF ALL PONDS PER DETAIL 2 SHEET CE06.

WETLAND BOUNDARY

WETLAND BUFFER

NORTH

0' 15' 30' 60'
SCALE

MATCHLINE; SEE SHEET CE05

Drawing: C:\BMS\SKILLINGS-PW-01\TRISTAN ROBERTSON\DMS12837\23014_PS_EC_2.DWG Layout Tab: 23014_PS_EC_2
Xrefs: X-BASE.DWG / 23014_BP_EX_TOPO.DWG / 23014_BP_EC.DWG / 23014_BP_DR.DWG / X-DEMO.DWG / PC PARKS TITLEBLOCK.DWG / 23014_BP_SEP.DWG / 23014_BP_SEP_PIPELINE2.DWG
Date: 10/09/2026 Time: 09:21:37 AM Plotted by: TRISTANROBERTSON

SKILLINGS

DESIGNED BY: S. MOLAMPHY	SURVEYED BY: R. EDWARDS
DRAWN BY: S. MOLAMPHY	DATE SURVEYED: October 9, 2026
CHECKED BY: T. SKILLINGS	DATE PLOTTED: Oct 9, 2026

THOMAS E. SKILLINGS — STATE OF WASHINGTON — 17952 — REGISTERED PROFESSIONAL ENGINEER — 10/09/2026

NO.	DATE	REVISION	BY	APPROVED
1	10/09/26	ADDENDUM 1		

Pierce County
Parks and Recreation Services
Lakewood Community Center
9112 Lakewood Drive SW
Lakewood, WA 98499
253.798.4081

BID SET

CE04

ORANGEGATE PARK
PHASE 1 IMPROVEMENTS

TEMPORARY EROSION AND SEDIMENT CONTROL PLAN

P-111031

REGION NO.	STATE	FEDERAL AID PROJECT NO.	SHEET NO.	TOTAL SHEETS
10	WA	*N/A*		

811 Know what's **below.** **Call** before you dig.

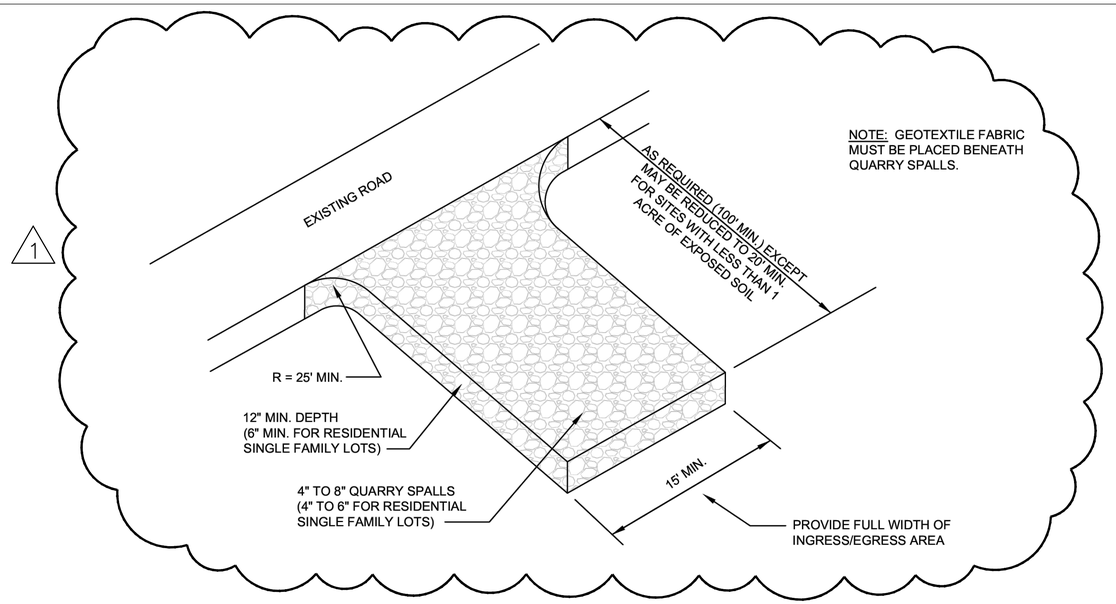

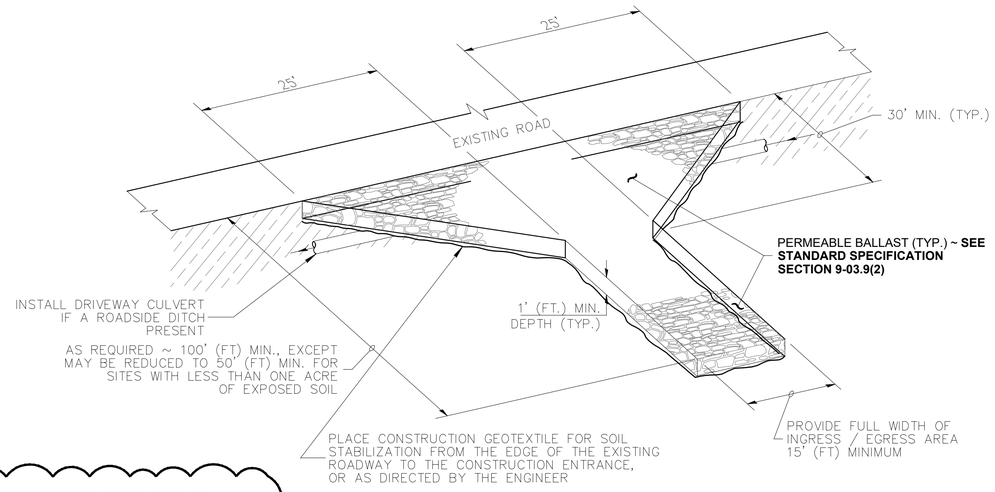

1 NOTE: CONTRACTOR SHALL UTILIZE PIERCE COUNTY SECTION C-4.0 DETAIL AND SUPPLEMENT WITH A DRIVEWAY CULVERT AS SHOWN.

ISOMETRIC VIEW

STABILIZED CONSTRUCTION ENTRANCE

STABILIZED CONSTRUCTION ENTRANCE SHALL MEET THE REQUIREMENTS OF **STANDARD SPECIFICATION SECTION 8-01.3(7).**

MISCELLANEOUS EROSION CONTROL DETAILS

ADAPTED FROM WSDOT STD I-80.10-02 & PC SECTION C - 4.0

3

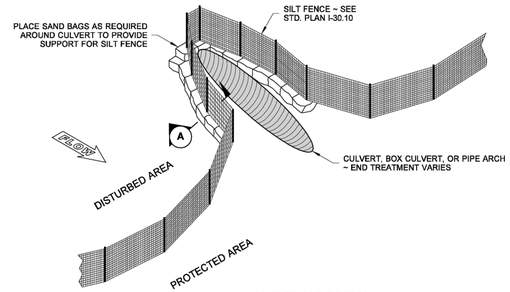

SILT FENCE DESIGN

NOTE

Perform maintenance in accordance with Standard Specification 8-01.3(9)A and 8-01.3(15).

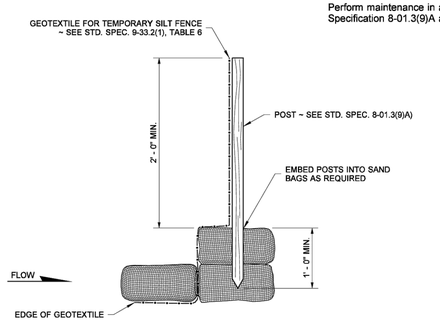

SECTION (A)

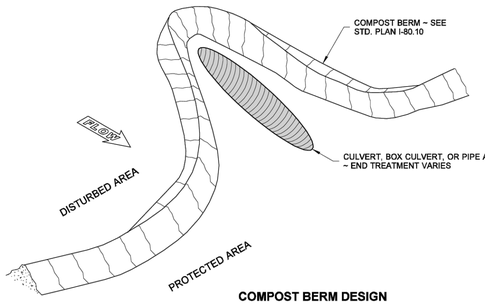

COMPOST BERM DESIGN

EROSION CONTROL AT CULVERT ENDS

WSDOT STD I-30.20-00

4

NO.	DATE	REVISION	BY	APPROVED
1	10/09/26	ADDENDUM 1		

SKILLINGS

DESIGNED BY:	SURVEYED BY:
S. MOLAMPHY	R. EDWARDS
DRAWN BY:	DATE SURVEYED:
S. MOLAMPHY	October 9, 2026
CHECKED BY:	DATE PLOTTED:
T. SKILLINGS	Oct 9, 2026

THOMAS E. SKILLINGS — STATE OF WASHINGTON — 17952 — REGISTERED PROFESSIONAL ENGINEER — 10/09/2026

Pierce County
Parks and Recreation Services
Lakewood Community Center
9112 Lakewood Drive SW
Lakewood, WA 98499
253.798.4081

BID SET

CE07

ORANGEGATE PARK
PHASE 1 IMPROVEMENTS

TESC DETAILS

P-111031

Drawing: C:\BMS\SKILLINGS-PW-01\TRISTAN ROBERTSON\DMS12837\23014_DE_EC.DWG Layout Tab: TESC DETAILS 2
Xrefs: 23014_BP_DE_EC.DWG / PC PARKS TITLEBLOCK.DWG
Date: 10/09/2026 Time: 09:24:54 AM Plotted by: TRISTANROBERTSON

SEE SHEET CG04 FOR PLAN FOR POINTS ALONG THE A ALIGNMENT

SEE SHEETS CG04 AND CG05 FOR POINTS ALONG THE B ALIGNMENT (1)

SEE SHEETS CG06 AND CG07 FOR PLAN OF PLAYGROUND POINTS

REGION NO.	STATE	FEDERAL AID PROJECT NO.	SHEET NO.	TOTAL SHEETS
10	WA	*N/A*		

A ALIGNMENT POINTS

POINT #	STATION	OFFSET	SIDE	ELEVATION
101	100+32.47	46.55'	LT	389.85'
102	100+67.47	12.00'	LT	391.91'
103	100+32.73	12.00'	LT	390.89'
104	100+33.16	47.29'	RT	391.66'
105	100+68.16	12.00'	RT	392.37'
106	100+32.90	12.00'	RT	391.27'
107	100+32.81	0.00'	--	391.10'
108	101+51.11	12.00'	RT	396.09'
109	101+51.15	12.00'	LT	395.62'
110	112+03.00	0.00'	--	401.56'
111	102+39.90	12.00'	LT	401.06'
112	102+90.86	12.00'	RT	405.07'
113	103+14.72	11.09'	RT	406.20'
114	103+36.98	11.00'	RT	406.95'
115	103+50.28	11.00'	RT	407.67'
116	103+36.98	11.00'	LT	406.97'
117	103+50.28	11.00'	LT	407.26'
118	104+13.64	30.00'	LT	409.16'
119	104+64.31	30.00'	RT	409.16'
120	105+30.74	30.00'	LT	410.33'
121	105+81.41	30.00'	RT	410.33'
122	106+39.65	11.00'	LT	410.32'
123	106+39.65	11.00'	RT	410.32'
124	106+61.75	11.00'	LT	410.04'
125	106+61.75	0.00'	--	409.82'
126	106+61.75	11.00'	RT	409.68'
127	106+66.30	11.00'	RT	409.53'
128	106+88.74	11.00'	RT	409.07'
129	107+21.05	0.00'	--	407.46'
130	107+80.35	11.00'	RT	403.32'
131	107+80.35	11.00'	LT	403.76'
132	107+98.71	11.00'	RT	403.03'
133	107+93.40	11.00'	LT	403.19'
134	108+62.07	30.00'	RT	402.13'
135	109+07.43	30.00'	LT	401.74'
136	109+79.18	30.00'	RT	401.41'
137	110+24.54	30.00'	LT	402.72'
138	110+82.78	11.00'	LT	402.89'
139	110+88.09	11.00'	RT	402.98'
140	111+05.12	11.00'	RT	403.19'
141	111+05.12	11.00'	LT	403.19'
142	111+51.33	9.19'	RT	403.34'
143	111+55.31	17.21'	LT	404.40'
144	100+68.16	47.00'	RT	391.19'
145	100+67.47	47.00'	LT	391.51'
146	103+02.80	14.65'	RT	406.22'
147	111+56.73	28.45'	RT	399.89'
148	111+26.81	20.32'	RT	401.40'
149	107+80.35	37.75'	LT	407.97'

B ALIGNMENT POINTS

POINT #	STATION	OFFSET	SIDE	ELEVATION
201	213+61.32	0.00'	--	400.82'
202	200+24.22	0.00'	--	400.01'
203	200+63.55	0.00'	--	398.24'
204	201+27.20	0.00'	--	395.86'
205	201+93.37	0.00'	--	397.67'
206	202+67.00	0.00'	--	400.98'
207	203+32.78	0.00'	--	403.46'
208	206+47.49	0.00'	--	403.86'
209	208+64.17	0.00'	--	410.54'
210	211+75.25	0.00'	--	407.50'
211	212+81.27	0.00'	--	402.80'
212	213+87.26	0.00'	--	401.46'
213	214+51.37	0.00'	--	402.08'
214	214+68.17	0.00'	--	401.49'
215	215+44.82	5.00'	RT	398.52'
218	215+48.88	5.00'	LT	398.42'
219	215+65.05	9.22'	RT	398.40'
220	215+67.30	25.87'	RT	398.18'
221	215+51.48	11.57'	LT	398.60'
222	215+70.17	4.96'	LT	398.62'
223	215+75.17	4.97'	LT	398.67'
224	215+74.59	5.03'	RT	398.52'
225	215+74.95	0.00'	--	398.59'
226	200+43.88	10.40'	LT	400.70'
227	202+30.18	21.03'	LT	394.89'
228	202+99.89	3.32'	RT	402.51'
229	206+39.13	72.57'	RT	407.89'
230	213+21.29	6.41'	LT	401.07'
231	213+87.52	20.00'	LT	403.44'
232	214+59.77	1.90'	LT	401.80'
233	215+99.63	0.01'	LT	398.84'
234	215+99.67	4.99'	RT	398.76'
235	215+99.59	5.00'	LT	398.91'
236	216+04.67	5.00'	RT	398.76'
237	216+04.59	5.00'	LT	398.89'
238	216+30.22	0.00'	--	398.91'
239	216+53.79	0.00'	--	399.54'
240	216+93.07	0.00'	--	400.60'
241	222+49.54	0.00'	--	396.40'
242	222+58.77	0.02'	LT	396.66'
243	223+17.59	0.00'	--	395.94'
244	223+00.36	0.00'	--	396.57'
245	223+55.63	0.00'	--	393.58'
246	223+67.33	0.00'	--	393.21'
247	223+87.69	0.00'	--	392.66'
248	223+61.48	0.53'	RT	393.40'
249	216+73.43	10.36'	RT	397.23'
250	216+42.01	6.22'	LT	399.21'
251	215+65.99	1.04'	RT	398.51'
252	215+56.19	14.90'	LT	398.44'
253	215+99.59	10.00'	LT	398.70'
254	216+04.52	15.00'	LT	397.27'
255	215+99.71	10.00'	RT	398.25'
256	216+04.73	15.00'	RT	396.89'

PLAYGROUND POINTS

POINT #	NORTHING	EASTING	ELEV.
401	679634.57	1176644.43	410.72
402	679651.69	1176641.82	410.91
403	679654.48	1176615.65	410.91
404	679649.58	1176616.69	412.09
405	679653.44	1176610.76	410.96
406	679648.54	1176611.80	412.01
407	679647.28	1176596.74	411.11
408	679636.52	1176583.42	411.35
409	679631.63	1176587.26	412.01
410	679633.61	1176579.35	411.38
411	679627.18	1176584.40	411.99
412	679629.24	1176573.78	411.47
413	679622.96	1176570.09	411.50
414	679621.43	1176569.84	411.48
415	679617.48	1176569.21	411.44
416	679609.93	1176568.00	411.36
417	679601.14	1176573.17	411.66
418	679594.44	1176585.57	411.99
419	679594.93	1176594.88	412.14
420	679609.04	1176612.52	411.82
421	679615.29	1176607.52	412.13
422	679612.17	1176616.42	411.72
423	679618.41	1176611.42	412.14
424	679626.25	1176634.03	411.12
425	679632.50	1176629.03	412.25
426	679629.38	1176637.93	410.97
427	679635.62	1176632.94	412.26
428	679603.42	1176605.49	412.00
429	679605.76	1176603.62	412.06
430	679613.49	1176604.47	412.12
431	679636.01	1176632.62	412.34
432	679649.32	1176628.81	412.33
433	679619.56	1176581.53	411.99
434	679615.69	1176580.40	411.97
435	679598.21	1176579.66	411.88
436	679579.84	1176598.33	411.84
437	679569.49	1176630.50	411.64
438	679592.62	1176620.20	411.81
439	679557.97	1176604.44	411.73
440	679525.86	1176620.27	411.51
441	679546.59	1176629.82	411.55
442	679508.99	1176556.54	411.61
443	679490.09	1176552.59	411.50
444	679495.92	1176534.18	411.36
445	679500.37	1176528.82	411.32
446	679498.92	1176522.00	411.27
447	679538.02	1176490.85	411.20
448	679550.39	1176490.88	411.06
449	679503.09	1176487.12	410.97
450	679558.65	1176509.51	410.93

PLAYGROUND POINTS

POINT #	NORTHING	EASTING	ELEV.
451	679569.58	1176493.51	410.85
452	679544.50	1176521.43	411.28
453	679523.83	1176522.48	411.24
454	679546.10	1176526.17	411.48
455	679529.61	1176538.69	411.64
456	679525.48	1176535.88	411.46
457	679519.71	1176564.30	411.36
458	679535.94	1176588.33	411.65
459	679538.68	1176584.15	411.78
460	679558.71	1176589.39	411.88
461	679559.05	1176594.38	411.85
462	679568.46	1176592.50	411.90
463	679584.86	1176581.49	411.92
464	679593.38	1176563.68	411.61
465	679593.95	1176558.71	411.58
466	679579.06	1176527.02	411.31
467	679592.99	1176558.69	411.60
468	679586.78	1176544.00	412.06
469	679570.88	1176531.87	412.95
470	679546.99	1176533.18	413.99
471	679534.17	1176548.19	414.86
472	679542.71	1176571.82	415.99
473	679551.50	1176573.63	416.31
474	679556.40	1176572.03	416.49
475	679557.64	1176571.24	416.52
476	679561.72	1176572.47	416.54
477	679568.66	1176570.33	416.57
478	679571.98	1176559.78	416.53
479	679565.59	1176558.62	416.57
480	679561.78	1176555.38	416.55
481	679553.05	1176565.65	416.52
482	679553.97	1176567.66	416.51
483	679550.97	1176568.66	416.40
484	679545.13	1176567.45	416.09
485	679538.90	1176559.65	415.52
486	679538.93	1176549.71	414.97
487	679549.24	1176537.64	414.11
488	679569.14	1176536.55	413.04
489	679582.71	1176546.90	412.15
490	679588.48	1176562.78	411.68
491	679557.96	1176632.89	411.43
492	679548.36	1176634.50	411.49
493	679644.79	1176547.19	410.33
494	679643.47	1176554.62	410.51
495	679637.00	1176559.51	411.12
496	679630.06	1176558.64	411.45
497	679623.89	1176550.79	411.55
498	679622.00	1176549.68	411.58
499	679606.08	1176547.13	411.74
500	679602.07	1176543.60	411.85

PLAYGROUND POINTS

POINT #	NORTHING	EASTING	ELEV.
502	679592.50	1176525.99	411.29
503	679576.51	1176513.89	411.09
504	679524.73	1176628.22	411.44
505	679523.01	1176603.76	411.57
506	679521.99	1176602.01	411.63
507	679554.76	1176554.72	416.55
508	679492.91	1176618.97	411.63
509	679471.74	1176582.69	411.63
510	679500.82	1176565.73	411.63
511	679499.80	1176563.98	411.59
512	679483.46	1176543.67	411.36
513	679489.06	1176501.83	411.04
514	679523.51	1176477.06	411.01
515	679561.34	1176481.88	410.78
516	679573.72	1176505.69	410.86
517	679573.36	1176510.39	410.95
518	679703.28	1176693.96	411.00
519	679708.75	1176681.65	411.00
520	679714.24	1176684.09	410.89
521	679722.26	1176666.01	410.89
522	679730.56	1176669.70	410.74
523	679741.59	1176643.81	409.94
524	679745.51	1176634.61	410.02
525	679758.32	1176623.50	409.07
526	679732.72	1176610.14	409.54
527	679729.49	1176618.95	409.94
528	679723.05	1176617.26	409.31
529	679713.15	1176612.49	410.43
530	679704.48	1176605.73	410.63
531	679701.02	1176650.02	410.95
532	679707.62	1176647.49	410.83
533	679709.70	1176642.82	410.68
534	679711.78	1176638.16	410.53
535	679712.06	1176631.28	410.47
536	679705.65	1176623.52	410.59
537	679697.58	1176625.13	410.70
538	679691.09	1176640.20	410.95
539	679693.36	1176646.61	410.95
540	679689.36	1176651.40	411.00
541	679675.87	1176681.79	411.00
542	679673.11	1176680.60	410.95
543	679669.87	1176687.92	410.94
544	679651.58	1176679.82	410.67
545	679654.82	1176672.51	410.79
546	679671.74	1176646.52	410.90
547	679678.64	1176643.83	410.94
548	679685.65	1176627.55	410.78
549	679692.66	1176611.27	410.78
551	679691.97	1176606.17	410.93
552	679666.10	1176643.95	410.92

PLAYGROUND POINTS

POINT #	NORTHING	EASTING	ELEV.
553	679663.33	1176638.19	410.87
554	679665.03	1176620.37	410.76
555	679670.03	1176620.10	410.71
556	679660.93	1176590.30	411.02
557	679676.19	1176586.44	410.83
558	679660.41	1176566.71	410.58
559	679656.63	1176592.86	411.07
560	679655.43	1176590.94	411.09
561	679645.52	1176578.32	411.17
562	679646.41	1176571.21	411.09
563	679653.49	1176565.85	410.74
564	679650.79	1176670.72	410.68
565	679644.29	1176670.17	410.51
566	679638.83	1176673.75	410.38
567	679633.39	1176687.59	411.02
568	679639.08	1176705.60	411.78
569	679643.13	1176707.45	411.87
570	679667.41	1176712.50	411.87
571	679666.19	1176718.37	411.96
572	679659.34	1176751.34	411.96
573	679618.21	1176742.79	411.96
574	679625.06	1176709.83	411.96
575	679625.48	1176707.83	411.93
576	679625.15	1176702.58	411.85
577	679623.63	1176684.46	410.97
578	679630.76	1176667.72	410.20
579	679632.77	1176661.56	410.33
580	679631.86	1176657.04	410.46
581	679630.58	1176655.45	410.49
582	679607.65	1176626.78	411.56
583	679602.96	1176624.97	411.51
584	679597.58	1176625.82	411.64
585	679594.30	1176627.84	411.77
586	679582.16	1176636.23	411.54
587	679567.44	1176635.06	411.43
588	679657.24	1176662.64	410.95
589	679663.15	1176665.27	410.94
590	679669.79	1176662.73	410.96
591	679670.03	1176662.20	410.96
592	679667.52	1176655.59	410.98
593	679661.63	1176652.91	410.99
594	679654.91	1176655.44	410.97
595	679654.67	1176655.98	410.97
596	679534.12	1176561.10	415.41
597	679716.78	1176663.58	411.00

SEE SHEETS CG03 AND CG04 FOR PLAN OF DOG TRAIL POINTS

DOG TRAIL POINTS

POINT #	NORTHING	EASTING	ELEV.
301	679806.6503	1176500.7583	403.20
302	679808.1681	1176486.6500	402.95
303	679827.9072	1176470.8967	402.65
304	679815.1214	1176454.8845	402.34
305	679807.3346	1176456.7377	402.36
306	679796.5728	1176443.4170	402.14
307	679782.6547	1176454.5330	402.22
308	679768.5943	1176452.9770	401.98
309	679800.2991	1176492.9299	403.00
310	679774.8364	1176460.7773	402.18
311	679825.4752	1176467.8510	402.59
312	679854.1054	1176480.4272	401.07
313	680030.8141	1176675.7861	403.77
314	680068.6254	1176696.6715	403.12
315	680094.2917	1176707.5848	402.70
316	680131.2996	1176723.2319	402.11
317	680150.2664	1176729.3926	401.90
318	679814.4160	1176494.4580	401.79
319	679776.3799	1176446.9296	400.30
320	679835.4487	1176484.0228	400.56
321	679883.2519	1176631.6621	402.99
322	680051.5469	1176682.9208	403.42
323	680080.5440	1176704.2792	402.93

SEE SHEET CG02 FOR PLAN OF 80TH ST POINTS

80TH ST PATH POINTS

POINT #	NORTHING	EASTING	ELEV.
601	680583.40	1176360.65	389.45
602	680583.45	1176357.65	389.40
603	680583.49	1176354.65	389.35
604	680576.82	1176360.79	389.70
605	680577.02	1176357.78	389.65
606	680577.22	1176354.78	389.60
607	680569.88	1176360.93	389.67
608	680569.74	1176357.93	389.62
609	680569.61	1176354.93	389.58
610	680563.75	1176359.54	389.64
611	680565.07	1176356.84	389.60
612	680566.39	1176354.15	389.55
613	680558.99	1176355.44	389.62
614	680563.89	1176351.98	389.53
615	680561.44	1176353.71	389.57

Know what's below. Call before you dig.

GRADING KEY NOTES:

1. ASPHALT PATH SEE SHEET CP02 FOR TYPICAL SECTIONS.
2. ENTRANCE GATE, SEE LS13 SHEETS FOR DETAIL.
3. PROPOSED ASPHALT DRIVE SURFACES, SEE SHEET CP01 FOR TYPICAL SECTIONS.
4. CONCRETE SURFACING SEE SHEET CP02 FOR TYPICAL SECTIONS.
5. EXISTING TRAIL.
6. PLAY AREA SURFACING, SEE LS17 SHEETS FOR DETAIL.
7. PLANTING AREA, SEE LP01–LP13.
8. CONCRETE DRIVEWAY, SEE SHEET CP02 FOR TYPICAL SECTIONS.
9. CONCRETE WALKING PATH, SEE SHEET CP02 FOR TYPICAL SECTIONS.
10. ASPHALT WALKING PATH, SEE SHEET CP02 FOR TYPICAL SECTIONS.
11. BIORETENTION SURFACING, SEE SHEET CD34 FOR TYPICAL SECTION.
12. ROCKERY WALL, SEE LS11 SHEETS FOR DETAIL.

GRADING LEGEND

- LIMITS OF WORK
- F — FILL
- C — CUT
- EXISTING DITCH/SWALE
- OHP — OVERHEAD POWER
- UPH — UNDERGROUND PHONE

Drawing: C:\BMS\SKILLINGS-PW-01\TRISTAN ROBERTSON\DMS12837\23014_NT_GR.DWG Layout Tab: 23014_NT_GR
Xrefs: PC PARKS TITLEBLOCK.DWG / X-BASE.DWG
Date: 10/09/2026 Time: 09:26:47 AM Plotted by: TRISTANROBERTSON

SKILLINGS

DESIGNED BY: S. MOLAMPHY	SURVEYED BY: R. EDWARDS
DRAWN BY: S. MOLAMPHY	DATE SURVEYED: October 9, 2026
CHECKED BY: T. SKILLINGS	DATE PLOTTED: Oct 9, 2026

THOMAS E. SKILLINGS — STATE OF WASHINGTON — 17952 — REGISTERED PROFESSIONAL ENGINEER — 10/09/2026

NO.	DATE	REVISION	BY	APPROVED
1	10/09/26	ADDENDUM 1		

Pierce County
Parks and Recreation Services
Lakewood Community Center
9112 Lakewood Drive SW
Lakewood, WA 98499
253.798.4081

BID SET

CG01

ORANGEGATE PARK
PHASE 1 IMPROVEMENTS

GRADING NOTES

P-111031

REGION NO.	STATE	FEDERAL AID PROJECT NO.	SHEET NO.	TOTAL SHEETS
10	WA	*N/A*		

811 Know what's **below.** **Call** before you dig.

MATCHLINE; SEE SHEET CG03

SEE SHEETS CD08–CD10
FOR ENLARGED POND VIEWS.

TOP OF DETENTION POND SHALL BE FLAT AT ELEVATION 392' AND 6' WIDE FOR ALL FILL

ROCKERY WALL, SEE SHEET LS11

GRADE BREAK LINE

GRADE OUT FROM TOP OF SEPTIC TANK PLATFORM 5:1, SEE SHEET CG01 FOR POINT TABLE

COBBLE DRAINAGE STRIP SEE DETAIL 2 SHEET CD33

SUB ALT 1: PICNIC SHELTER 1, FOR BASE BID SEE DETAIL 1, THIS SHEET

COBBLE DRAINAGE SWALE, SEE DETAIL 1 SHEET CD33

SEE SITE LS17 FOR PLAY SURFACING (TYP)

COBBLE DRAINAGE STRIP SEE DETAIL 2 SHEET CD33

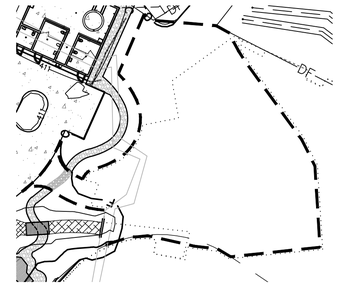

PICNIC SHELTER 1 AREA: BASE BID

1 SCALE: 1"=30'-0"

NORTH 0' 15' 30' 60' SCALE

NOTES:
1. ALL ELEVATIONS ARE FINISHED GRADE UNLESS OTHERWISE STATED.
2. #XX, REFER TO SHEET CG01. FOR POINT TABLES.
3. SQUARE KEY NOTES: [XX] , REFER TO SHEET CG01.
4. REFER TO SHEET CG06 AND CG07 FOR PLAYGROUND POINTS.

MATCHLINE; SEE SHEET CG05

Drawing: C:\BM\SKILLINGS-PW-01\TRISTAN.ROBERTSON\DMS128377\23014_PS_GR_2.DWG Layout Tab: 23014_PS_GR_2
Xrefs: X-BASE.DWG / X-DEMO.DWG / PC PARKS TITLEBLOCK.DWG / 23014_BP_SEP.DWG / 23014_BP_EX_COMPOSITE-TOPO.DWG / X-CIVIL CONTOURS.DWG / X-CIVIL CONTOURS.DWG
Date: 10/09/2026 Time: 09:29:46 AM Plotted by: TRISTANROBERTSON

SKILLINGS

DESIGNED BY: S. MOLAMPHY	SURVEYED BY: R. EDWARDS
DRAWN BY: S. MOLAMPHY	DATE SURVEYED: October 9, 2026
CHECKED BY: T. SKILLINGS	DATE PLOTTED: Oct 9, 2026

THOMAS E. SKILLINGS — STATE OF WASHINGTON — 17952 — REGISTERED PROFESSIONAL ENGINEER — 10/09/2026

NO.	DATE	REVISION	BY	APPROVED
1	10/09/26	ADDENDUM 1		

Pierce County
Parks and Recreation Services
Lakewood Community Center
9112 Lakewood Drive SW
Lakewood, WA 98499
253.798.4081

BID SET

CG04

ORANGEGATE PARK
PHASE 1 IMPROVEMENTS

GRADING PLAN

P-111031

REGION NO.	STATE	FEDERAL AID PROJECT NO.	SHEET NO.	TOTAL SHEETS
10	WA	*N/A*		

811 Know what's below. Call before you dig.

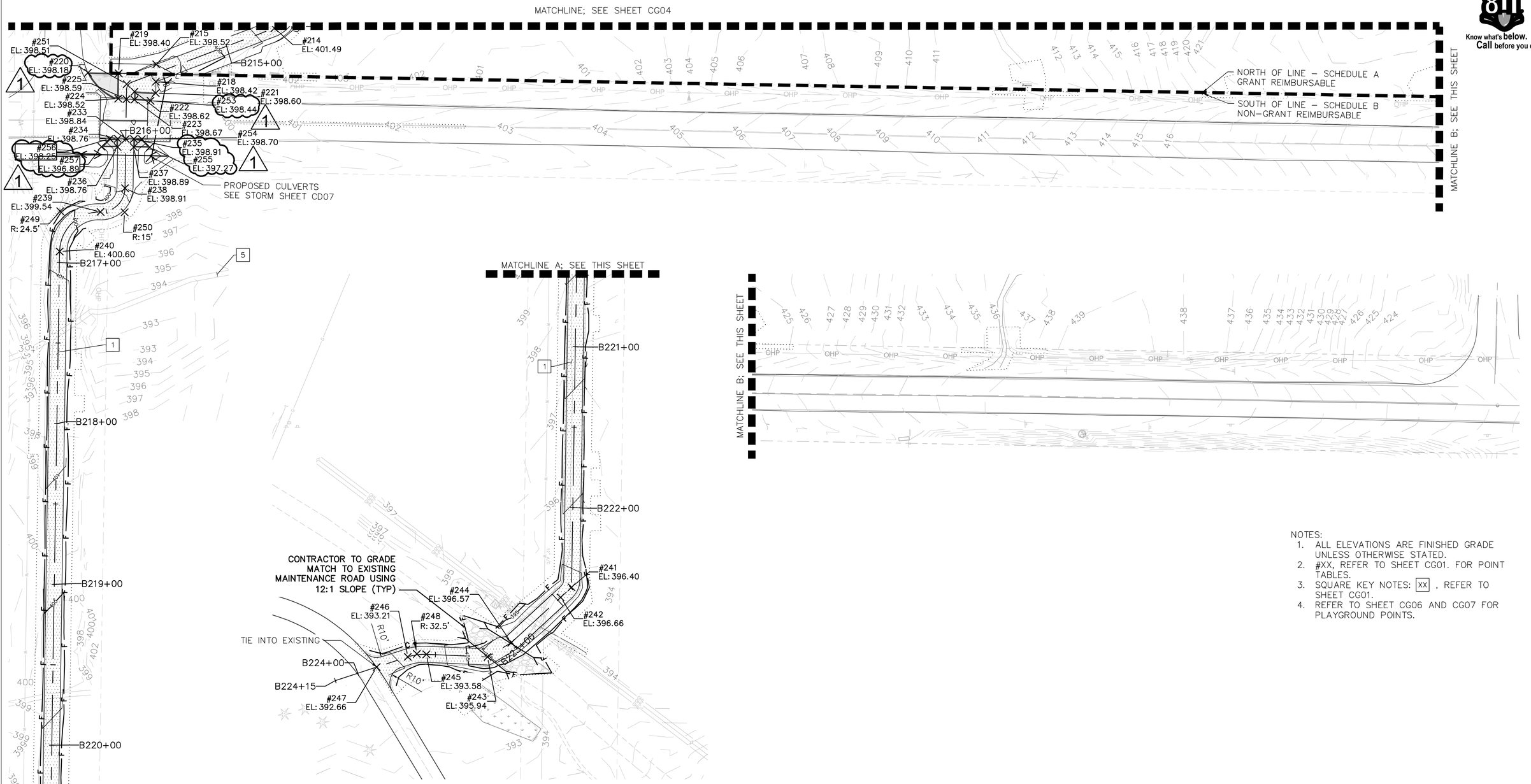

NOTES:
1. ALL ELEVATIONS ARE FINISHED GRADE UNLESS OTHERWISE STATED.
2. #XX, REFER TO SHEET CG01. FOR POINT TABLES.
3. SQUARE KEY NOTES: [XX] , REFER TO SHEET CG01.
4. REFER TO SHEET CG06 AND CG07 FOR PLAYGROUND POINTS.

Drawing: C:\BMS\SKILLINGS-PW-01\TRISTAN ROBERTSON\DMS12837\23014_PS_GR_3.DWG Layout Tab: 23014_PS_GR_3
Xrefs: X-DEMO.DWG / X-BASE.DWG / 23014_BP_DR.DWG / PC PARKS TITLEBLOCK.DWG / 23014_BP_EX_COMPOSITE-TOPO.DWG / X-CIVIL CONTOURS.DWG
Date: 10/09/2026 Time: 09:34:09 AM Plotted by: TRISTANROBERTSON

SKILLINGS

DESIGNED BY: S. MOLAMPHY	SURVEYED BY: R. EDWARDS
DRAWN BY: S. MOLAMPHY	DATE SURVEYED: October 9, 2026
CHECKED BY: T. SKILLINGS	DATE PLOTTED: Oct 9, 2026

THOMAS E. SKILLINGS — STATE OF WASHINGTON — 17952 — REGISTERED PROFESSIONAL ENGINEER — 10/09/2026

NO.	DATE	REVISION	BY	APPROVED
1	10/09/26	ADDENDUM 1		

Pierce County
Parks and Recreation Services
Lakewood Community Center
9112 Lakewood Drive SW
Lakewood, WA 98499
253.798.4081

BID SET

CG05

ORANGEGATE PARK
PHASE 1 IMPROVEMENTS

GRADING PLAN

P-111031

REGION NO.	STATE	FEDERAL AID PROJECT NO.	SHEET NO.	TOTAL SHEETS
10	WA	N/A		

811 Know what's below. Call before you dig.

PROFILE SCALE (FULL SIZE 22"X34")
1"=20' HOR.
1"=4' VER.

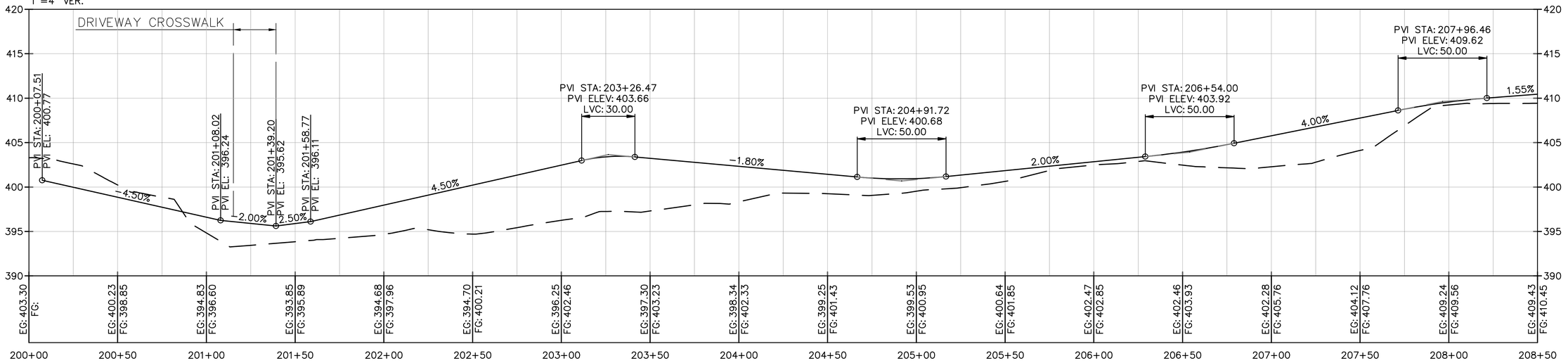

B ALIGNMENT – 200+00 TO 208+50

PROFILE SCALE (FULL SIZE 22"X34")
1"=20' HOR.
1"=4' VER.

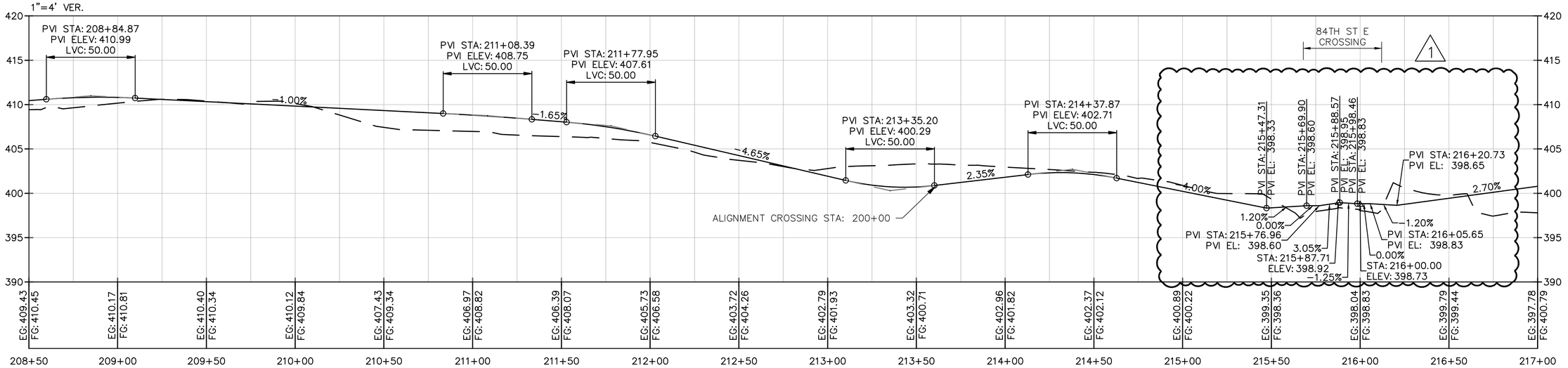

B ALIGNMENT – 208+50 TO 217+00

Drawing: C:\BMS\SKILLINGS-PW-01\TRISTAN ROBERTSON\DMS12837\23014_PR_GR_2.DWG Layout Tab: GRADING PROFILES
Xrefs: PC PARKS TITLEBLOCK.DWG
Date: 10/09/2026 Time: 10:42:58 AM Plotted by: TRISTANROBERTSON

SKILLINGS

DESIGNED BY:	SURVEYED BY:
S. MOLAMPHY	R. EDWARDS
DRAWN BY:	DATE SURVEYED:
S. MOLAMPHY	October 9, 2026
CHECKED BY:	DATE PLOTTED:
T. SKILLINGS	Oct 9, 2026

THOMAS E. SKILLINGS — STATE OF WASHINGTON — 17952 — REGISTERED PROFESSIONAL ENGINEER — 10/09/2026

NO.	DATE	REVISION	BY	APPROVED
1	10/09/26	ADDENDUM 1		

Pierce County
Parks and Recreation Services
Lakewood Community Center
9112 Lakewood Drive SW
Lakewood, WA 98499
253.798.4081

BID SET

CG09

ORANGEGATE PARK
PHASE 1 IMPROVEMENTS

GRADING PROFILES

P-111031

REGION NO.	STATE	FEDERAL AID PROJECT NO.	SHEET NO.	TOTAL SHEETS
10	WA	*N/A*		

811 Know what's **below.** **Call** before you dig.

STRUCTURE TABLE

STRUCTURE NAME:	STA	NORTHING EASTING	DETAILS:	PIPES IN:	PIPES OUT	STRUCTURE KEY NOTES
CB–21 TYPE 1	??? ???, ???' ???	N: 679558.66 E: 1176284.09	CATCH BASIN TYPE 1 WITH HERRINGBONE GRATE RIM = 402.94 SUMP: 399.87	12 IN. N–12 PIPE INV IN=400.84	12 IN. N–12 PIPE INV OUT=400.84	1 5 12
CB–22 TYPE 2	A 101+86.19, 76.58' LT	N: 679592.62 E: 1176202.61	CATCH BASIN TYPE 2 48 IN. WITH BEEHIVE GRATE RIM = 398.79 SUMP: 390.79		12 IN. N–12 PIPE INV OUT=392.79	2 6 7 12
CB–23 TYPE 1	A 107+98.22, 10.47' RT	N: 679793.57 E: 1176531.45	CATCH BASIN TYPE 1 WITH HERRINGBONE GRATE RIM = 403.02 SUMP: 398.74		12 IN. N–12 PIPE INV OUT=400.74	1 5 12
CB–24 TYPE 1	A 108+55.94, 0.00'	N: 679749.34 E: 1176492.93	CATCH BASIN TYPE 1 WITH HERRINGBONE GRATE RIM = 401.66 SUMP: 397.57	12 IN. N–12 PIPE INV IN=399.57	12 IN. N–12 PIPE INV OUT=399.57	1 5 12
CB–25 TYPE 1	A 109+38.79, 0.00'	N: 679697.57 E: 1176428.24	CATCH BASIN TYPE 1 WITH HERRINGBONE GRATE RIM = 400.39 SUMP: 395.91	12 IN. N–12 PIPE INV IN=397.91	12 IN. N–12 PIPE INV OUT=397.91	1 5 12
CB–26 TYPE 1	A 110+35.94, 0.00' RT	N: 679636.87 E: 1176352.39	CATCH BASIN TYPE 1 WITH HERRINGBONE GRATE RIM = 401.82 SUMP: 395.43	12 IN. N–12 PIPE INV IN=397.43	12 IN. N–12 PIPE INV OUT=397.43	1 5 12
CB–27 TYPE 2	A 110+96.55, 9.27' RT	N: 679606.24 E: 1176299.28	CATCH BASIN TYPE 2 48 IN. WITH HERRINGBONE GRATE RIM = 403.07 SUMP: 395.12	12 IN. N–12 PIPE INV IN=397.12	12 IN. N–12 PIPE INV OUT=397.12	2 5 12
CB–28 TYPE 2	A 111+09.05, 102.33' RT	N: 679663.85 E: 1176223.55	CATCH BASIN TYPE 2 48 IN. WITH BEEHIVE GRATE RIM = 396.06 SUMP: 388.06		12 IN. N–12 PIPE INV OUT=390.06	2 6 7 12
CB–29 DRAIN BASIN	A 101+57.66, 10.27' LT	N: 679526.89 E: 1176172.74	NYLOPLAST 18 IN. DRAIN BASIN WITH HERRINGBONE GRATE RIM = 395.80 SUMP: 392.04		12 IN. N–12 PIPE INV OUT=394.04	5 12 13 14
CB–30 TYPE 2	A 101+69.98, 42.14' LT	N: 679558.51 E: 1176185.71	CATCH BASIN TYPE 2 48 IN. WITH BEEHIVE GRATE RIM = 394.93 SUMP: 388.14		12 IN. N–12 PIPE INV OUT=390.14	2 6 7 12
CB–31 TYPE 1	A 100+46.96, 17.11' LT	N: 679535.98 E: 1176062.20	CATCH BASIN TYPE 1 WITH HERRINGBONE GRATE RIM = 391.30 SUMP: 387.78		12 IN. N–12 PIPE INV OUT=389.78	1 5 12
CB–32 TYPE 2	A 100+95.79, 35.20' LT	N: 679553.07 E: 1176111.39	CATCH BASIN TYPE 2 48 IN. WITH BEEHIVE GRATE RIM = 390.60 SUMP: 385.25		12 IN. N–12 PIPE INV OUT=387.25	2 6 7 12
CB–33 TYPE 2	A 101+13.70, 70.04' LT	N: 679587.55 E: 1176130.00	CATCH BASIN TYPE 2 60 IN. WITH CONTROL STRUCTURE RIM = 393.44 SUMP: 380.97	12 IN. N–12 PIPE INV IN=385.00	12 IN. N–12 PIPE INV OUT=384.97 12 IN. N–12 PIPE INV OUT=390.00	2 4 9
CB–34 TYPE 2	A 100+61.66, 75.92' LT	N: 679594.48 E: 1176078.09	CATCH BASIN TYPE 2 48 IN. WITH SOLID LID RIM = 390.58 SUMP: 381.50	12 IN. N–12 PIPE INV IN=383.50	12 IN. N–12 PIPE INV OUT=383.50	2 4
CB–36 TYPE 2	A 110+42.76, 421.21' RT	N: 679961.48 E: 1176083.89	CATCH BASIN TYPE 2 48 IN. WITH SOLID LID RIM = 384.66 SUMP: 378.31	12 IN. N–12 PIPE INV IN=380.31	12 IN. N–12 PIPE INV OUT=380.31	2 4
CB–37 TYPE 2	A 109+33.05, 553.95' RT	N: 680133.66 E: 1176086.61	CATCH BASIN TYPE 2 48 IN. WITH SOLID LID RIM = 383.16 SUMP: 377.45	12 IN. N–12 PIPE INV IN=379.45	12 IN. N–12 PIPE INV OUT=379.45	2 4
CB–38 TYPE 2	A 109+87.49, 598.94' RT	N: 680134.78 E: 1176015.99	CATCH BASIN TYPE 2 60 IN. WITH BEEHIVE GRATE RIM = 384.16 SUMP: 377.10	12 IN. N–12 PIPE INV IN=379.10 EX. CONC. PIPE INV IN=379.10 EX. CONC. PIPE INV IN=379.10	EX. CONC. PIPE INV OUT=379.10	2 4

1

[X] STORMWATER NOTES

1. TYPE 1 CATCH BASIN, SEE DETAIL 1, SHEET CD28
2. TYPE 2 CATCH BASIN, SEE DETAIL 2, SHEET CD28
3. RECTANGULAR SOLID METAL LID, SEE DETAIL 3, SHEET CD29
4. CIRCULAR FRAME AND COVER, SEE DETAIL 4, SHEET CD30
5. RECTANGULAR HERRINGBONE GRATE, SEE DETAIL 5, SHEET CD30
6. BEEHIVE GRATE, SEE DETAIL 10, SHEET CD31
7. BEEHIVE GRATE CATCH BASIN INSTALLATION, SEE DETAIL 12, SHEET CD32
8. UNDER DRAIN CONCRETE INLET INSTALLATION, SEE DETAIL 16, SHEET CD33
9. CONTROL STRUCTURE FOR DETENTION POND, SEE DETAIL 17, SHEET CD34
10. CONCRETE INLET, SEE DETAIL 25 SHEET CD36.
11. ADA GRATE FOR RECTANGULAR FRAMES, SEE DETAIL 26 SHEET CD36.
12. RECTANGULAR FRAMES, SEE DETAIL 27 SHEET CD37.
13. PVC CATCH BASIN. SEE DETAIL 28 SHEET CD37.
14. PVC CATCH BASIN CONCRETE COLLAR. SEE DETAIL 29 SHEET CD37.

Drawing: C:\BMS\SKILLINGS-PW-01\TRISTAN ROBERTSON\DMS12837\23014_NT_SD_03.DWG Layout Tab: 23014_NT_SD_03
Xrefs: PC PARKS TITLEBLOCK.DWG
Date: 10/09/2026 Time: 09:37:11 AM Plotted by: TRISTANROBERTSON

SKILLINGS

DESIGNED BY: S. MOLAMPHY	SURVEYED BY: R. EDWARDS
DRAWN BY: S. MOLAMPHY	DATE SURVEYED: October 9, 2026
CHECKED BY: T. SKILLINGS	DATE PLOTTED: Oct 9, 2026

THOMAS E. SKILLINGS STATE OF WASHINGTON 17952 REGISTERED PROFESSIONAL ENGINEER 10/09/2026

NO.	DATE	REVISION	BY	APPROVED
1	10/09/26	ADDENDUM 1		

Pierce County
Parks and Recreation Services
Lakewood Community Center
9112 Lakewood Drive SW
Lakewood, WA 98499
253.798.4081

BID SET

CD03

ORANGEGATE PARK PHASE 1 IMPROVEMENTS

SCHEDULE OF STRUCTURES

P-111031

REGION NO.	STATE	FEDERAL AID PROJECT NO.	SHEET NO.	TOTAL SHEETS
10	WA	N/A		

811 Know what's below. Call before you dig.

MATCHLINE; SEE SHEET CD04

NOTE:
1. SEE CD01 FOR STORMWATER NOTES.
2. SEE CD02 AND CD03 FOR SCHEDULE OF STRUCTURES.

1

SEE SHEET LD03 FOR DEMOLITION PLAN
SEE SHEET CP05 FOR PAVEMENT RESTORATION

CB-37 TYPE 2

SEE SHEET CD22 FOR PIPE PLAN AND PROFILE

CB-38 TYPE 2

CB-36 TYPE 2

ADD ALT 2: OLA LOOP TRAIL, EXISTING TRAIL TO REMAIN FOR BASE BID

2' GRAVEL TRANSITION TO SHEET FLOW DISPERSION

SEPTIC RESERVE AREA A

SEPTIC RESERVE AREA B

NORTH

0' 15' 30' 60'
SCALE

MATCHLINE; SEE SHEET CD06

Drawing: C:\BMS\SKILLINGS-PW-01\TRISTAN ROBERTSON\DMS1283712\23014_PS_SD.DWG Layout Tab: 23014_PS_SD
Xrefs: X-BASE.DWG / 23014_BP_DR.DWG / PC PARKS TITLEBLOCK.DWG / 23014_BP_EX_COMPOSITE-TOPO.DWG / 23014_BP_SEP.DWG / X-DEMO.DWG / X-CIVIL CONTOURS.DWG
Date: 10/09/2026 Time: 09:39:09 AM Plotted by: TRISTANROBERTSON

SKILLINGS

DESIGNED BY: S. MOLAMPHY	SURVEYED BY: R. EDWARDS
DRAWN BY: S. MOLAMPHY	DATE SURVEYED: October 9, 2026
CHECKED BY: T. SKILLINGS	DATE PLOTTED: Oct 9, 2026

THOMAS E. SKILLINGS — STATE OF WASHINGTON — 17952 — REGISTERED PROFESSIONAL ENGINEER
10/09/2026

NO.	DATE	REVISION	BY	APPROVED
1	10/09/26	ADDENDUM 1		

Pierce County
Parks and Recreation Services
Lakewood Community Center
9112 Lakewood Drive SW
Lakewood, WA 98499
253.798.4081

BID SET

CD05

ORANGEGATE PARK
PHASE 1 IMPROVEMENTS

STORM DRAINAGE PLAN

P-111031

REGION NO.	STATE	FEDERAL AID PROJECT NO.	SHEET NO.	TOTAL SHEETS
10	WA	*N/A*		

811 Know what's below. Call before you dig.

MATCHLINE; SEE SHEET CD05

SEPTIC RESERVE AREA B

DOG AREA ENTRANCE
SEE SHEET LS10

SEPTIC DRAINFIELD AREA A
SEE SHEETS CS01–CS07

SEPTIC DRAINFIELD AREA B
SEE SHEETS CS08–CS14

RESTROOM/MAINTENANCE
BUILDING, SEE APPENDIX B

CB–35 TYPE 2
CB–34 TYPE 2
CB–33 TYPE 2
CB–32 TYPE 2
CB–31 TYPE 1
100+00
CB–30 TYPE 2
CB–29 DRAIN BASIN
CB–28 TYPE 2
CB–27 TYPE 2
CB–26 TYPE 1
CB–25 TYPE 1
CB–24 TYPE 1
CB–23 TYPE 1
CB–22 TYPE 2
CB–21 TYPE 1
CB–20 TYPE 1
CB–19 TYPE 1
CB–18 TYPE 1
CB–17 TYPE 1
CB–16 TYPE 1
CB–15 TYPE 1
CB–14 TYPE 1
CB–13 TYPE 1
CB–12 TYPE 1
CB–11 TYPE 1
CB–10 DRAIN BASIN
CB–9 CONCRETE INLET
CB–8 CONCRETE INLET
CB–7 CONCRETE INLET
CB–6 TYPE 1
CB–5 CONCRETE INLET
CB–4 CONCRETE INLET
CB–3 TYPE 1
CB–2 CONCRETE INLET
CB–1 CONCRETE INLET

A–LINE
B–LINE

A 100+38.10, 58.11' LT
IE: 388.24 (12" S)

A 100+76.17, 21.45' RT
PC SWALE

A 100+46.28, 49.52' RT
PT SWALE

A:100+41.85, 60.59' RT
END SWALE
SEE DETAIL 14 ON SHEET CD32

A 100+41.81, 61.46' RT
IE: 389.91 (12" N)

12" DI CULVERT PIPE
N: 679639.55
E: 1176674.26
IE: 410.42

12" DI CULVERT PIPE
N: 679630.84
E: 1176664.72
IE: 410.24

DOWNSPOUT DRAINLINE
SEE DETAIL 13 SHEET CD32
N: 679673.94
E: 1176682.53
WYE CONNECTION WITH CLEANOUT

COBBLE DRAINAGE STRIP
SEE DETAIL 15 SHEET CD33

SINGLE PITCHED ROOF DRIPS
ONTO COBBLE STRIP FOR
DISPERSION.

SUB ALT 1: PICNIC
SHELTER 1, FOR BASE BID
SEE DETAIL 1, THIS SHEET

COBBLE DRAINAGE SWALE,
SEE DETAIL 14 SHEET CD33

YARD DRAIN
FLOW DISPERSION TRENCH
N: 679588.76
E: 1176664.75
SEE DETAIL 24 SHEET CD35

SEE SHEET LS17 FOR
PLAY SURFACING (TYP)

SINGLE PITCHED ROOF DRIPS
ONTO COBBLE STRIP FOR
DISPERSION.

COBBLE DRAINAGE STRIP
SEE DETAIL 15 SHEET CD33

WETLAND C

PICNIC SHELTER 1 AREA: BASE BID

1 SCALE: 1"=30'

NORTH

0' 15' 30' 60'
SCALE

(X) NOTES:

A) DETENTION POND, SEE CD08 FOR ENLARGED PLAN.
B) NORTHERN BIORETENTION POND, SEE CD09 FOR ENLARGED PLAN.
C) SOUTHERN BIORETENTION POND, SEE CD10 FOR ENLARGED PLAN.
D) EASTERN BIORETENTION POND, SEE CD10 FOR ENLARGED PLAN.
E) WESTERN BIORETENTION POND, SEE CD08 FOR ENLARGED PLAN.

NOTE:
1. SEE CD01 FOR STORMWATER NOTES.
2. SEE CD02 AND CD03 FOR SCHEDULE OF STRUCTURES.
3. SEE CD14 TO CD26 FOR PLAN AND PROFILE VIEWS OF PIPES AND CULVERTS.
4. SEE CD27 FOR ENLARGED COBBLE DRAINAGE SWALE PLAN.

MATCHLINE; SEE SHEET CD07

Drawing: C:\BMS\SKILLINGS-PW-01\TRISTAN ROBERTSON\DMS12837\23014_PS_SD_2.DWG Layout Tab: 23014_PS_SD_2
Xrefs: X-BASE.DWG / 23014_BP_DR.DWG / PC PARKS TITLEBLOCK.DWG / X-DEMO.DWG / 23014_BP_EX_COMPOSITE-TOPO.DWG / 23014_BP_SEP.DWG / X-CIVIL CONTOURS.DWG / L-SHEET CUTS.DWG
Date: 10/09/2026 Time: 09:41:30 AM Plotted by: TRISTANROBERTSON

SKILLINGS

DESIGNED BY:	SURVEYED BY:
S. MOLAMPHY	R. EDWARDS
DRAWN BY:	DATE SURVEYED:
S. MOLAMPHY	October 9, 2026
CHECKED BY:	DATE PLOTTED:
T. SKILLINGS	Oct 9, 2026

THOMAS E. SKILLINGS — STATE OF WASHINGTON — 17952 — REGISTERED PROFESSIONAL ENGINEER — 10/09/2026

NO.	DATE	REVISION	BY	APPROVED
1	10/09/26	ADDENDUM 1		

Pierce County
Parks and Recreation Services
Lakewood Community Center
9112 Lakewood Drive SW
Lakewood, WA 98499
253.798.4081

BID SET

CD06

ORANGEGATE PARK
PHASE 1 IMPROVEMENTS

STORM DRAINAGE PLAN

P-111031

REGION NO.	STATE	FEDERAL AID PROJECT NO.	SHEET NO.	TOTAL SHEETS
10	WA	*N/A*		

Know what's below. Call before you dig.

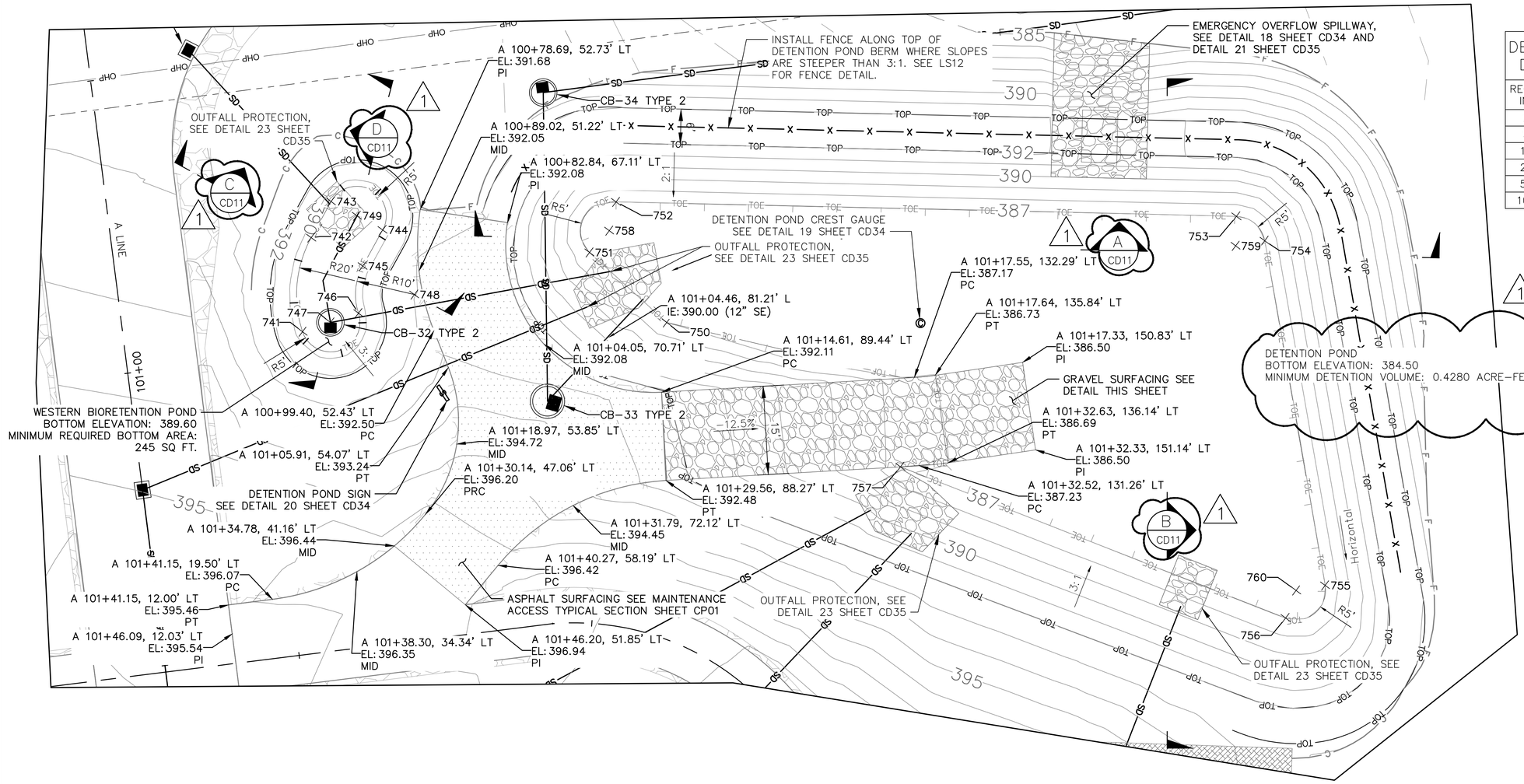

DETENTION POND DESIGN STAGE	
RECURRENCE INTERVAL	STAGE (FT)
2-YEAR	0.66
5-YEAR	1.28
10-YEAR	1.77
25-YEAR	2.48
50-YEAR	3.06
100-YEAR	3.69

NORTH 0' 5' 10' 20' SCALE

DETENTION POND			
POINT #	NORTHING	EASTING	RADIUS
750	679609.5115	1176119.7284	--
751	679598.2832	1176106.0769	--
752	679603.9822	1176098.2506	--
753	679707.7415	1176116.0546	--
754	679711.8941	1176120.8484	--
755	679713.4865	1176180.1917	--
756	679706.0488	1176184.6904	--
757	679645.1456	1176149.7661	--
758	679602.1448	1176102.9007	5.00'
759	679706.8959	1176120.9825	5.00'
760	679708.4883	1176180.3259	5.00'

WESTERN BIORETENTION POND			
POINT #	NORTHING	EASTING	RADIUS
741	679548.1478	1176112.2560	--
742	679551.9363	1176096.6832	--
743	679556.1776	1176091.1144	--
744	679564.1330	1176097.1734	--
745	679559.8917	1176102.7422	--
746	679557.9975	1176110.5286	--
747	679553.0726	1176111.3923	5.00'
748	679567.8472	1176108.8012	20'/10'
749	679560.1553	1176094.1439	5.00'

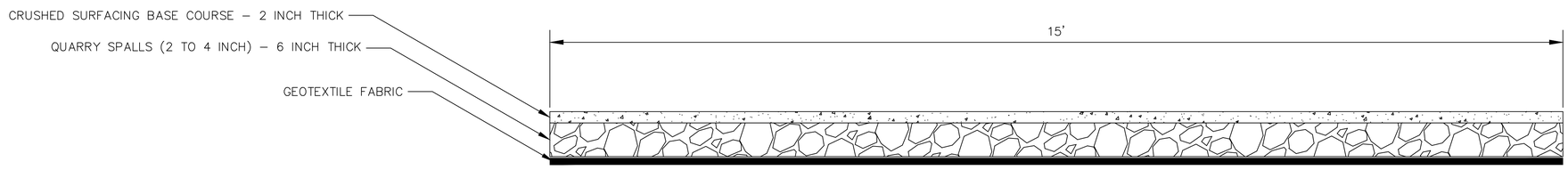

GRAVEL MAINTENANCE ACCESS
NTS

Drawing: C:\BMS\SKILLINGS-PW-01\TRISTAN ROBERTSON\DMS12837\23014_PS_SD_POND.DWG Layout Tab: CD08 STORM DRAINAGE ENLARGED VIEW
Xrefs: X-BASE.DWG / 23014_BP_DR.DWG / PC PARKS TITLEBLOCK.DWG / X-CIVIL CONTOURS.DWG / 23014_BP_EX_COMPOSITE-TOPO.DWG
Date: 10/09/2026 Time: 09:44:10 AM Plotted by: TRISTANROBERTSON

SKILLINGS

DESIGNED BY:	SURVEYED BY:
S. MOLAMPHY	R. EDWARDS
DRAWN BY:	DATE SURVEYED:
S. MOLAMPHY	October 9, 2026
CHECKED BY:	DATE PLOTTED:
T. SKILLINGS	Oct 9, 2026

THOMAS E. SKILLINGS — STATE OF WASHINGTON — 17952 — REGISTERED PROFESSIONAL ENGINEER — 10/09/2026

NO.	DATE	REVISION	BY	APPROVED
1	10/09/26	ADDENDUM 1		

Pierce County
Parks and Recreation Services
Lakewood Community Center
9112 Lakewood Drive SW
Lakewood, WA 98499
253.798.4081

BID SET

CD08

ORANGEGATE PARK
PHASE 1 IMPROVEMENTS

STORM DRAINAGE ENLARGED VIEW

P-111031

REGION NO.	STATE	FEDERAL AID PROJECT NO.	SHEET NO.	TOTAL SHEETS
10	WA	*N/A*		

NORTH

0' 5' 10' 20'
SCALE

811 Know what's below. Call before you dig.

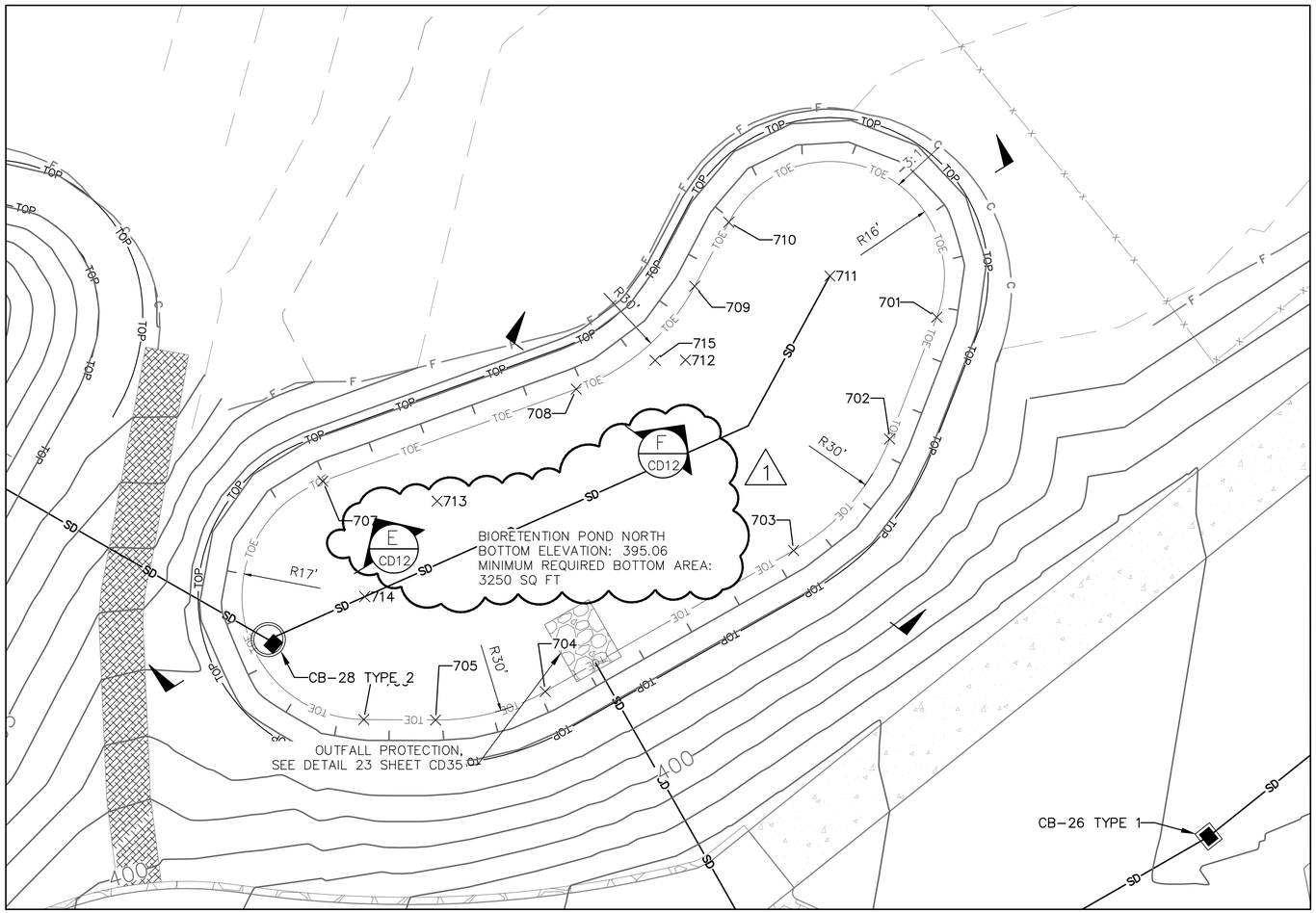

BIORETENTION POND NORTH			
POINT #	NORTHING	EASTING	RADIUS
701	679708.0238	1176315.1235	--
702	679691.3365	1176308.6748	--
703	679676.0630	1176295.5052	--
704	679656.7425	1176261.4811	--
705	679652.8307	1176246.4527	--
706	679652.9010	1176236.6299	--
707	679685.5587	1176230.9994	--
708	679698.1796	1176265.7235	--
709	679712.2783	1176281.9574	--
710	679721.0559	1176286.6298	--
711	679713.6812	1176300.4839	16'
712	679702.1504	1176280.6916	30'
713	679682.8299	1176246.6674	30'
714	679669.7360	1176236.7504	17'
715	679702.1132	1176276.5464	30'

Drawing: C:\BMS\SKILLINGS-PW-01\TRISTAN ROBERTSON\DMS12837\23014_PS_SD_POND_B.DWG Layout Tab: CD09 STORM DRAINAGE ENLARGED VIEW
Xrefs: X-BASE.DWG / 23014_BP_EX_TOPO.DWG / 23014_BP_DR.DWG / PC PARKS TITLEBLOCK.DWG / X-CIVIL CONTOURS.DWG / 23014_BP_BY OTHERS_PIPELINE2.DWG
Date: 10/09/2026 Time: 09:46:00 AM Plotted by: TRISTANROBERTSON

SKILLINGS

DESIGNED BY:	SURVEYED BY:
S. MOLAMPHY	R. EDWARDS
DRAWN BY:	DATE SURVEYED:
S. MOLAMPHY	October 9, 2026
CHECKED BY:	DATE PLOTTED:
T. SKILLINGS	Oct 9, 2026

THOMAS E. SKILLINGS — STATE OF WASHINGTON — 17952 — REGISTERED PROFESSIONAL ENGINEER — 10/09/2026

NO.	DATE	REVISION	BY	APPROVED
1	10/09/26	ADDENDUM 1		

Pierce County
Parks and Recreation Services
Lakewood Community Center
9112 Lakewood Drive SW
Lakewood, WA 98499
253.798.4081

BID SET

CD09

ORANGEGATE PARK
PHASE 1 IMPROVEMENTS

STORM DRAINAGE ENLARGED VIEW

P-111031

REGION NO.	STATE	FEDERAL AID PROJECT NO.	SHEET NO.	TOTAL SHEETS
10	WA	*N/A*		

NORTH

0' 5' 10' 20'
SCALE

811 Know what's below. Call before you dig.

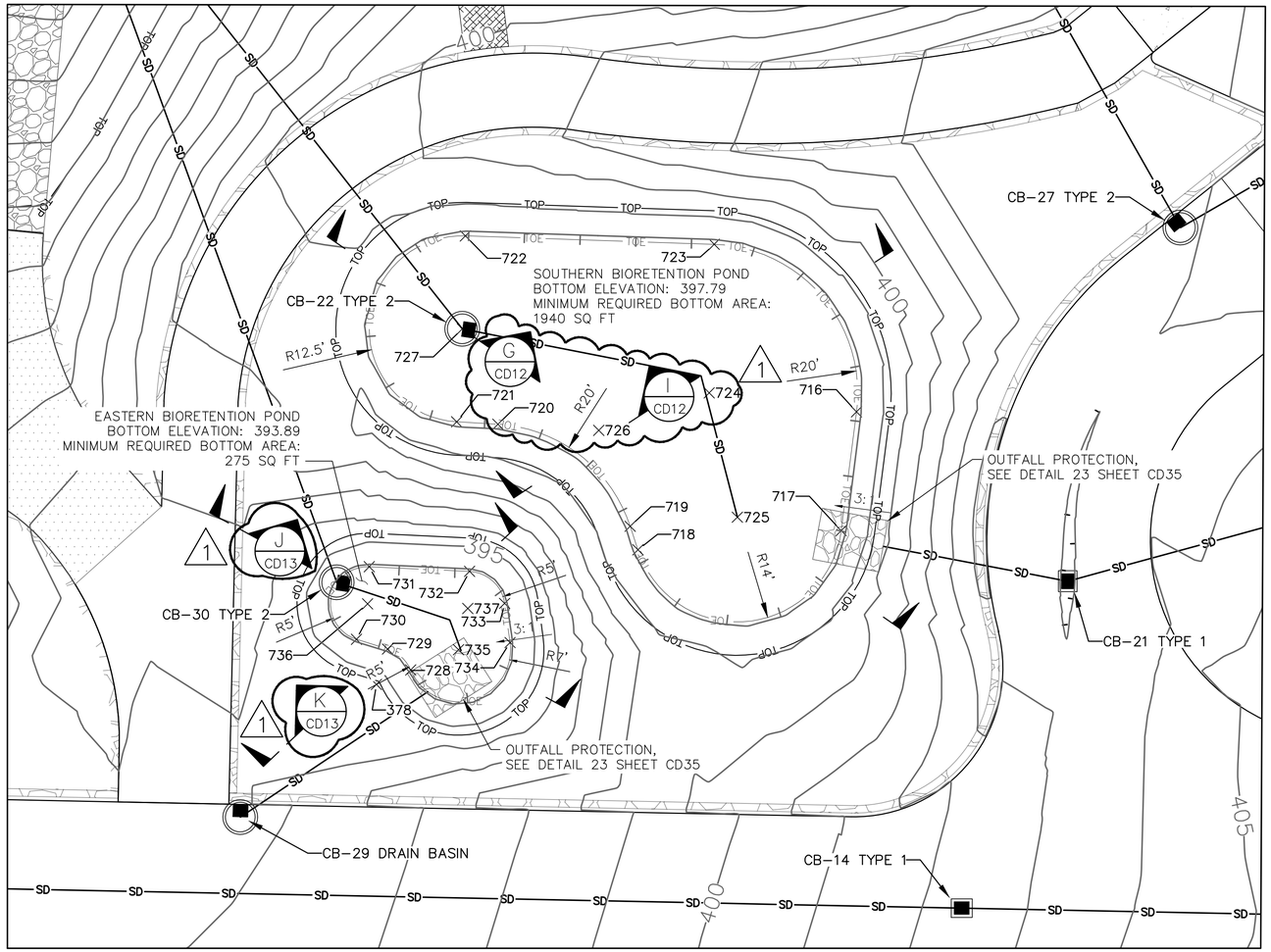

BIORETENTION POND EAST			
POINT #	NORTHING	EASTING	RADIUS
378	679544.7585	1176191.0504	5'
728	679546.7070	1176195.6552	--
729	679549.5290	1176192.5479	--
730	679550.8444	1176188.3575	--
731	679560.6095	1176190.0880	--
732	679559.9796	1176203.5843	--
733	679555.6719	1176208.3038	--
734	679550.3963	1176209.0354	--
735	679549.4347	1176202.1018	7'
736	679555.6149	1176189.8549	5'

BIORETENTION POND SOUTH			
POINT #	NORTHING	EASTING	RADIUS
716	679581.4541	1176255.6706	--
717	679565.4674	1176253.6060	--
718	679562.8806	1176226.2457	--
719	679566.0494	1176225.2062	--
720	679579.7798	1176207.4019	--
721	679580.1131	1176201.8543	--
722	679605.1385	1176203.0298	--
723	679604.0043	1176236.5124	--
724	679584.0158	1176235.8353	20'
725	679567.2719	1176239.6329	14'
726	679578.9647	1176220.9698	20'
727	679592.6181	1176202.6056	12.5'

Drawing: C:\BMS\SKILLINGS-PW-01\TRISTAN ROBERTSON\DMS12837\23014_PS_SD_POND_C.DWG Layout Tab: CD10 STORM DRAINAGE ENLARGED VIEW
Xrefs: X-BASE.DWG / 23014_BP_EX_TOPO.DWG / 23014_BP_DR.DWG / PC PARKS TITLEBLOCK.DWG / X-CIVIL CONTOURS.DWG / 23014_BP_BY OTHERS_PIPELINE2.DWG
Date: 10/09/2026 Time: 09:48:21 AM Plotted by: TRISTANROBERTSON

SKILLINGS

DESIGNED BY: S. MOLAMPHY	SURVEYED BY: R. EDWARDS
DRAWN BY: S. MOLAMPHY	DATE SURVEYED: October 9, 2026
CHECKED BY: T. SKILLINGS	DATE PLOTTED: Oct 9, 2026

THOMAS E. SKILLINGS — STATE OF WASHINGTON — 17952 — REGISTERED PROFESSIONAL ENGINEER — 10/09/2026

NO.	DATE	REVISION	BY	APPROVED
1	10/09/26	ADDENDUM 1		

Pierce County
Parks and Recreation Services
Lakewood Community Center
9112 Lakewood Drive SW
Lakewood, WA 98499
253.798.4081

BID SET

CD10

ORANGEGATE PARK
PHASE 1 IMPROVEMENTS

STORM DRAINAGE ENLARGED VIEW

P-111031

REGION NO.	STATE	FEDERAL AID PROJECT NO.	SHEET NO.	TOTAL SHEETS
10	WA	*N/A*		

Know what's **below.** **Call** before you dig.

1

PROFILE SCALE (FULL SIZE 22"X34")
1"=25' HOR.
1"=5' VER.

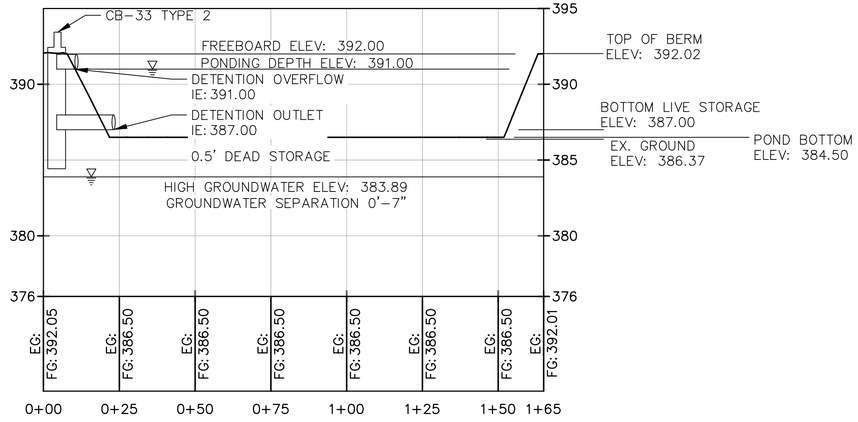

SECTION A

1

PROFILE SCALE (FULL SIZE 22"X34")
1"=25' HOR.
1"=5' VER.

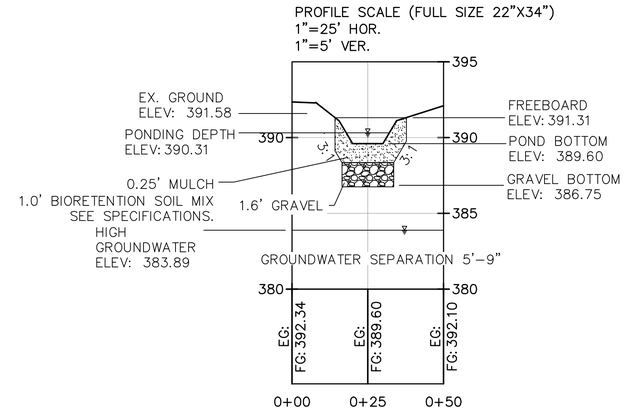

SECTION C

1

PROFILE SCALE (FULL SIZE 22"X34")
1"=25' HOR.
1"=5' VER.

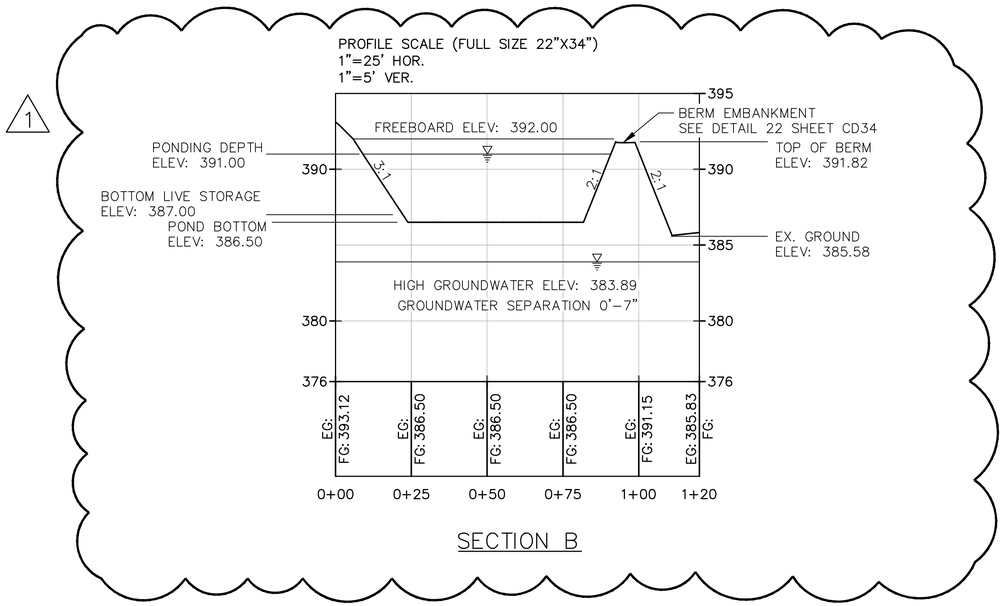

SECTION B

1

PROFILE SCALE (FULL SIZE 22"X34")
1"=25' HOR.
1"=5' VER.

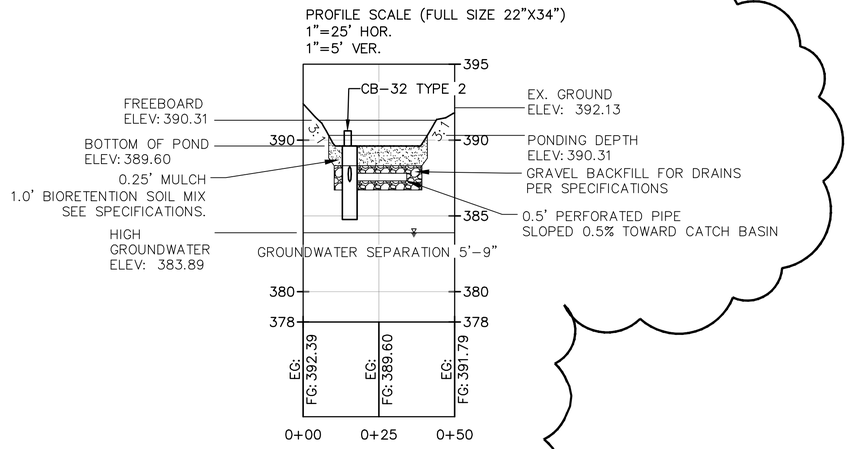

SECTION D

SKILLINGS

DESIGNED BY:	SURVEYED BY:
S. MOLAMPHY	R. EDWARDS
DRAWN BY:	DATE SURVEYED:
S. MOLAMPHY	October 9, 2026
CHECKED BY:	DATE PLOTTED:
T. SKILLINGS	Oct 9, 2026

THOMAS E. SKILLINGS — STATE OF WASHINGTON — 17952 — REGISTERED PROFESSIONAL ENGINEER — 10/09/2026

NO.	DATE	REVISION	BY	APPROVED
1	10/09/26	ADDENDUM 1		

Pierce County
Parks and Recreation Services
Lakewood Community Center
9112 Lakewood Drive SW
Lakewood, WA 98499
253.798.4081

BID SET

CD11

ORANGEGATE PARK
PHASE 1 IMPROVEMENTS

POND SECTIONS

P-111031

Drawing: C:\BMS\SKILLINGS-PW-01\TRISTAN ROBERTSON\DMS12837\23014_PR_SD_DET.DWG Layout Tab: LAYOUT1
Xrefs: 23014_BP_DR.DWG / PC PARKS TITLEBLOCK.DWG / 23014_BP_EX_COMPOSITE-TOPO.DWG
Date: 10/09/2026 Time: 09:50:20 AM Plotted by: TRISTANROBERTSON

REGION NO.	STATE	FEDERAL AID PROJECT NO.	SHEET NO.	TOTAL SHEETS
10	WA	N/A		

Know what's **below.** **Call** before you dig.

1

PROFILE SCALE (FULL SIZE 22"X34")
1"=25' HOR.
1"=5' VER.

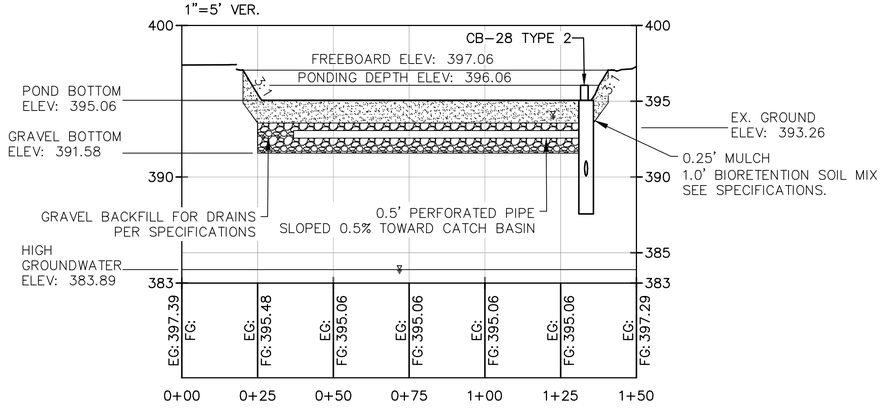

SECTION E

1

PROFILE SCALE (FULL SIZE 22"X34")
1"=25' HOR.
1"=5' VER.

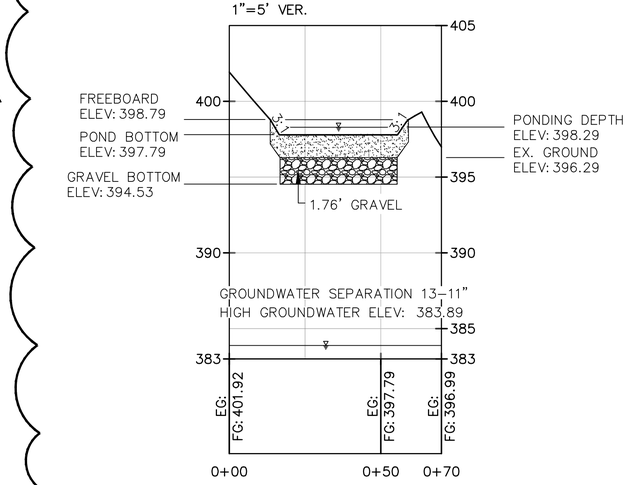

SECTION I

1

PROFILE SCALE (FULL SIZE 22"X34")
1"=25' HOR.
1"=5' VER.

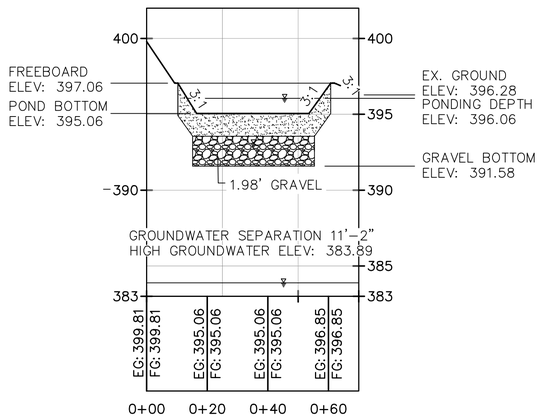

SECTION F

1

PROFILE SCALE (FULL SIZE 22"X34")
1"=25' HOR.
1"=5' VER.

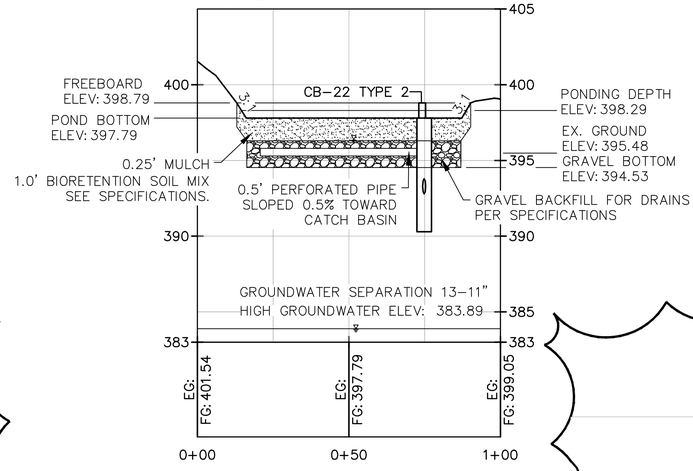

SECTION G

SKILLINGS

DESIGNED BY: S. MOLAMPHY	SURVEYED BY: R. EDWARDS
DRAWN BY: S. MOLAMPHY	DATE SURVEYED: October 9, 2026
CHECKED BY: T. SKILLINGS	DATE PLOTTED: Oct 9, 2026

THOMAS E. SKILLINGS — STATE OF WASHINGTON — 17952 — REGISTERED PROFESSIONAL ENGINEER
10/09/2026

NO.	DATE	REVISION	BY	APPROVED
1	10/09/26	ADDENDUM 1		

Pierce County
Parks and Recreation Services
Lakewood Community Center
9112 Lakewood Drive SW
Lakewood, WA 98499
253.798.4081

BID SET

CD12

ORANGEGATE PARK
PHASE 1 IMPROVEMENTS

POND SECTIONS

P-111031

Drawing: C:\BMS\SKILLINGS-PW-01\TRISTAN ROBERTSON\DMS12837\23014_PR_SD_POND_02.DWG Layout Tab: LAYOUT1
Xrefs: 23014_BP_DR.DWG / PC PARKS TITLEBLOCK.DWG / 23014_BP_EX_COMPOSITE-TOPO.DWG
Date: 10/09/2026 Time: 09:52:07 AM Plotted by: TRISTANROBERTSON

REGION NO.	STATE	FEDERAL AID PROJECT NO.	SHEET NO.	TOTAL SHEETS
10	WA	*N/A*		

Know what's **below.** **Call** before you dig.

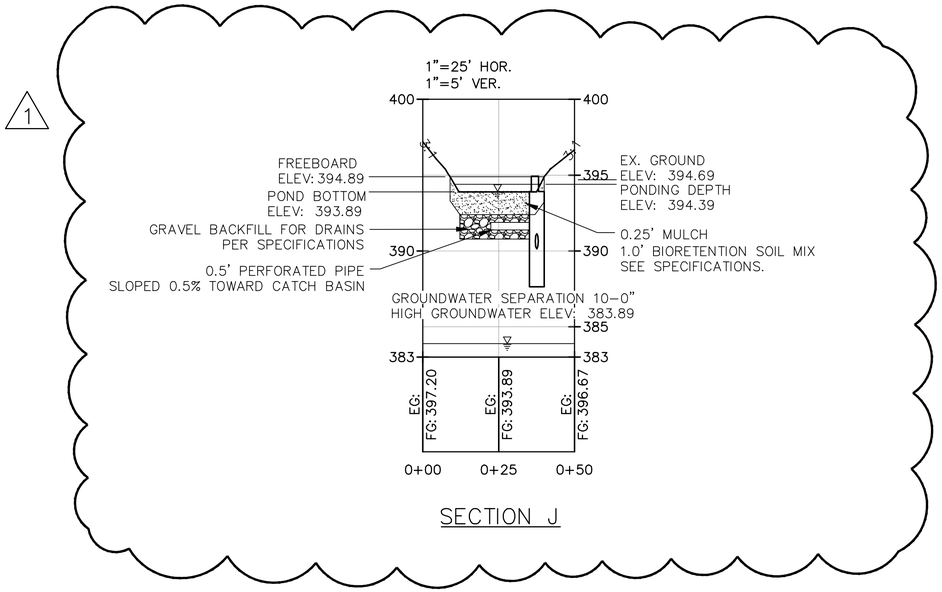

SECTION J

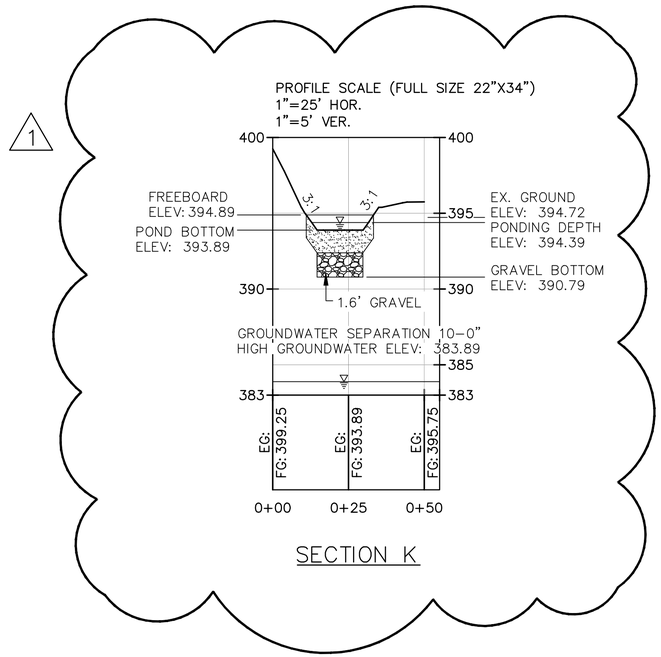

SECTION K

Drawing: C:\BMS\SKILLINGS-PW-01\TRISTAN ROBERTSON\DMS12837\23014_PR_SD_POND_03.DWG Layout Tab: LAYOUT1
Xrefs: 23014_BP_DR.DWG / PC PARKS TITLEBLOCK.DWG / 23014_BP_EX_COMPOSITE-TOPO.DWG
Date: 10/09/2026 Time: 09:53:27 AM Plotted by: TRISTANROBERTSON

SKILLINGS

DESIGNED BY: S. MOLAMPHY	*SURVEYED BY:* R. EDWARDS
DRAWN BY: S. MOLAMPHY	*DATE SURVEYED:* October 9, 2026
CHECKED BY: T. SKILLINGS	*DATE PLOTTED:* Oct 9, 2026

THOMAS E. SKILLINGS — STATE OF WASHINGTON — 17952 — REGISTERED PROFESSIONAL ENGINEER — 10/09/2026

NO.	DATE	REVISION	BY	APPROVED
1	10/09/26	ADDENDUM 1		

Pierce County
Parks and Recreation Services
Lakewood Community Center
9112 Lakewood Drive SW
Lakewood, WA 98499
253.798.4081

BID SET

CD13

ORANGEGATE PARK
PHASE 1 IMPROVEMENTS

POND SECTIONS

P-111031

REGION NO.	STATE	FEDERAL AID PROJECT NO.	SHEET NO.	TOTAL SHEETS
10	WA	*N/A*		

NORTH

SCALE 0' 10' 20' 40'

811 Know what's below. Call before you dig.

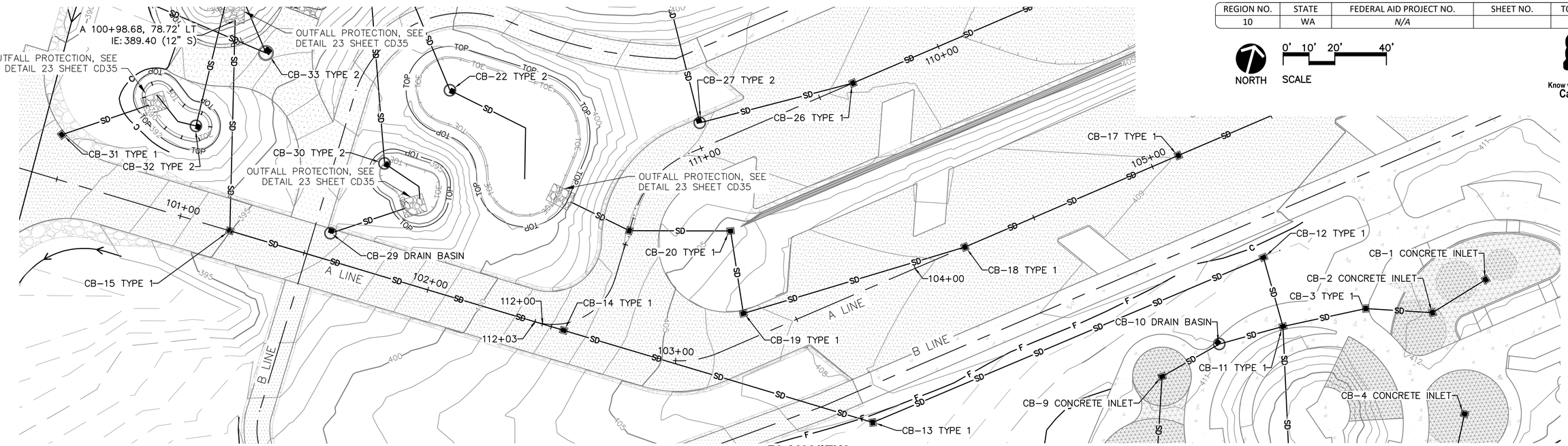

PLAN VIEW

PROFILE SCALE (FULL SIZE 22"X34")
1"=20' HOR.
1"=4' VER.

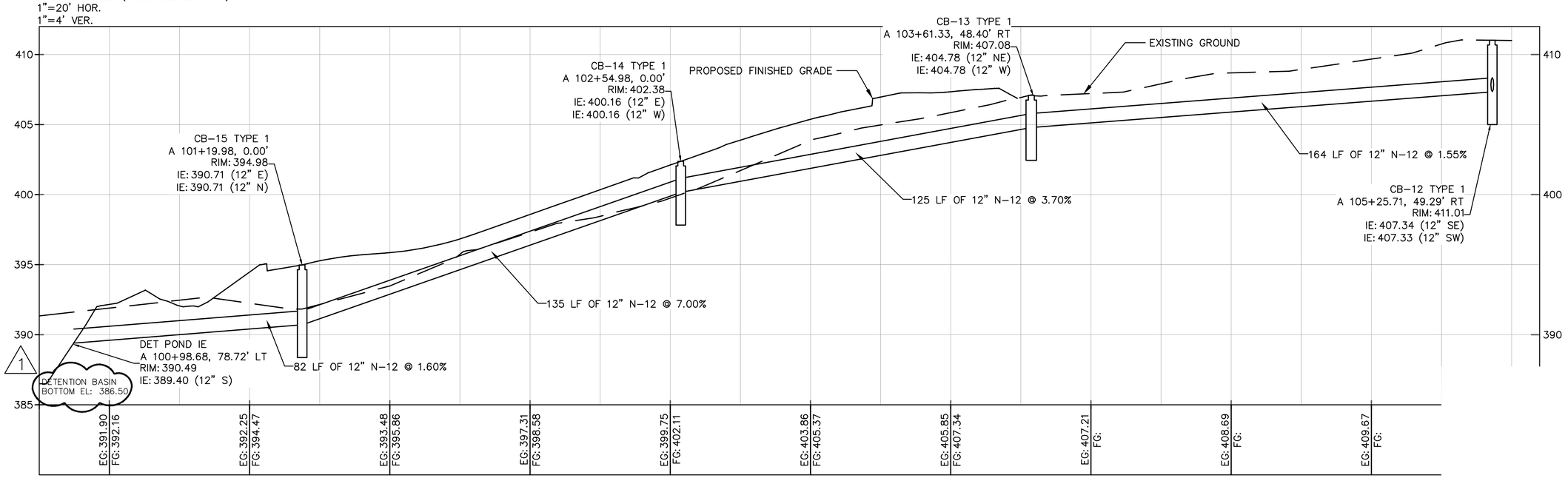

NOTES:
FINISHED GRADE AND EXISTING GROUND AS SHOWN AT STRUCTURE AND PIPE LOCATIONS.

LENGTHS OF PIPE NOT CALCULABLE FROM STATIONS AND OFFSETS.

SEE SHEET CD06 FOR A-LINE ALIGNMENT.

SEE SHEET CD15 FOR CB-12 PROFILE.

PROFILE VIEW

SKILLINGS

DESIGNED BY:	SURVEYED BY:
S. MOLAMPHY	R. EDWARDS
DRAWN BY:	DATE SURVEYED:
S. MOLAMPHY	October 9, 2026
CHECKED BY:	DATE PLOTTED:
T. SKILLINGS	Oct 9, 2026

THOMAS E. SKILLINGS — STATE OF WASHINGTON — 17952 — REGISTERED PROFESSIONAL ENGINEER
10/09/2026

NO.	DATE	REVISION	BY	APPROVED
1	10/09/26	ADDENDUM 1		

Pierce County
Parks and Recreation Services
Lakewood Community Center
9112 Lakewood Drive SW
Lakewood, WA 98499
253.798.4081

BID SET

CD14

ORANGEGATE PARK
PHASE 1 IMPROVEMENTS

STORM DRAINAGE PROFILES

P-111031

Drawing: C:\BMS\SKILLINGS-PW-01\TRISTAN ROBERTSON\DMS128377\23014_PR_SD_6.DWG Layout Tab: CD11 STORM DRAINAGE PROFILES
Xrefs: X-BASE.DWG / 23014_BP_DR.DWG / PC PARKS TITLEBLOCK.DWG / X-CIVIL CONTOURS.DWG
Date: 10/09/2026 Time: 09:56:12 AM Plotted by: TRISTANROBERTSON

REGION NO.	STATE	FEDERAL AID PROJECT NO.	SHEET NO.	TOTAL SHEETS
10	WA	*N/A*		

NORTH

SCALE 0' 10' 20' 40'

811 Know what's below. Call before you dig.

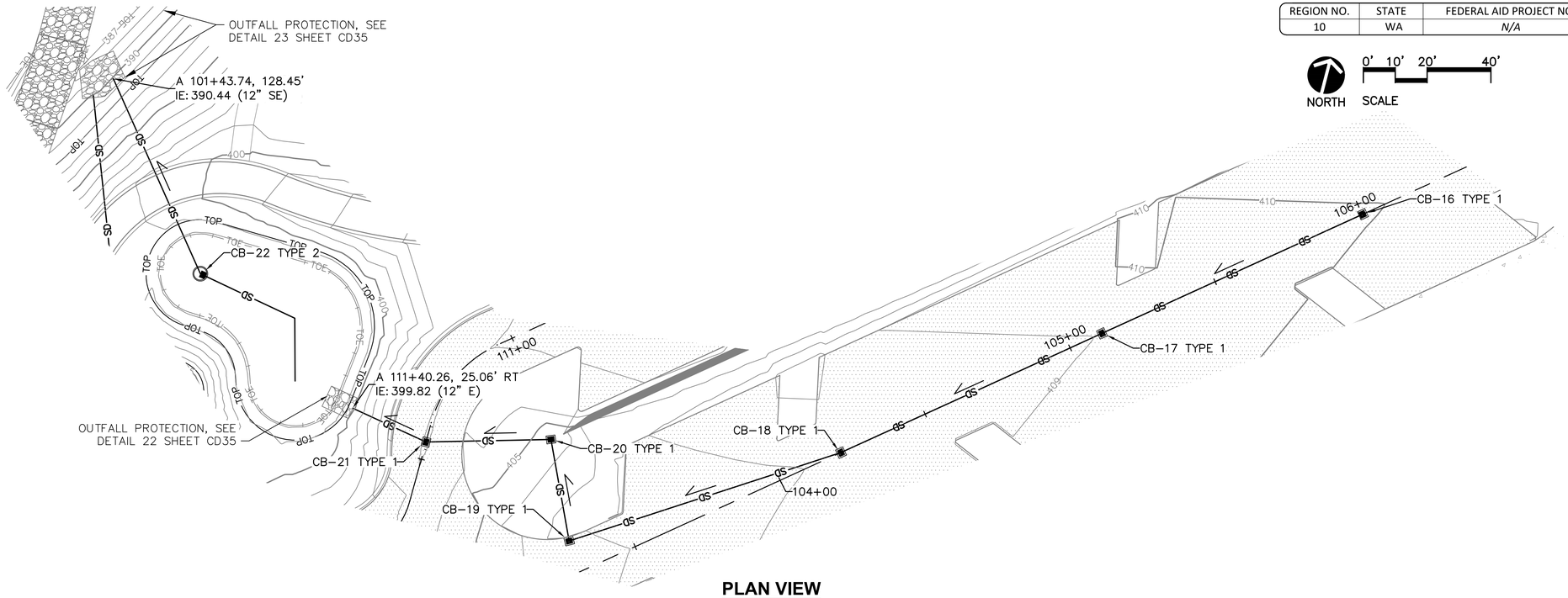

PLAN VIEW

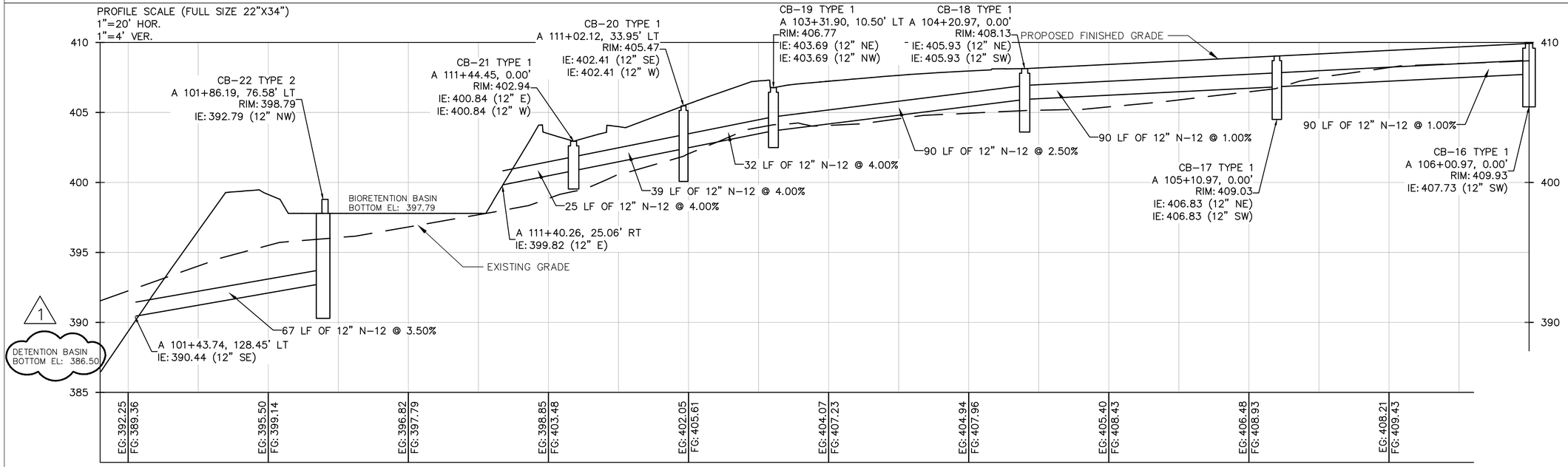

PROFILE VIEW

NOTES:
FINISHED GRADE AND EXISTING GROUND AS SHOWN AT STRUCTURE AND PIPE LOCATIONS.

LENGTHS OF PIPE NOT CALCULABLE FROM STATIONS AND OFFSETS.

SEE SHEET CD06 FOR A-LINE ALIGNMENT.

SKILLINGS

DESIGNED BY:	SURVEYED BY:
S. MOLAMPHY	R. EDWARDS
DRAWN BY:	DATE SURVEYED:
S. MOLAMPHY	October 9, 2026
CHECKED BY:	DATE PLOTTED:
T. SKILLINGS	Oct 9, 2026

THOMAS E. SKILLINGS — STATE OF WASHINGTON — 17952 — REGISTERED PROFESSIONAL ENGINEER — 10/09/2026

NO.	DATE	REVISION	BY	APPROVED
1	10/09/26	ADDENDUM 1		

Pierce County
Parks and Recreation Services
Lakewood Community Center
9112 Lakewood Drive SW
Lakewood, WA 98499
253.798.4081

BID SET

CD17

ORANGEGATE PARK PHASE 1 IMPROVEMENTS

STORM DRAINAGE PROFILES

P-111031

Drawing: C:\BMS\SKILLINGS-PW-01\TRISTAN ROBERTSON\DMS12837\23014_PR_SD_3.DWG Layout Tab: CD14 STORM DRAINAGE PROFILES
Xrefs: X-BASE.DWG / 23014_BP_DR.DWG / PC PARKS TITLEBLOCK.DWG / X-CIVIL CONTOURS.DWG
Date: 10/09/2026 Time: 09:57:43 AM Plotted by: TRISTANROBERTSON

REGION NO.	STATE	FEDERAL AID PROJECT NO.	SHEET NO.	TOTAL SHEETS
10	WA	*N/A*		

811 Know what's below. Call before you dig.

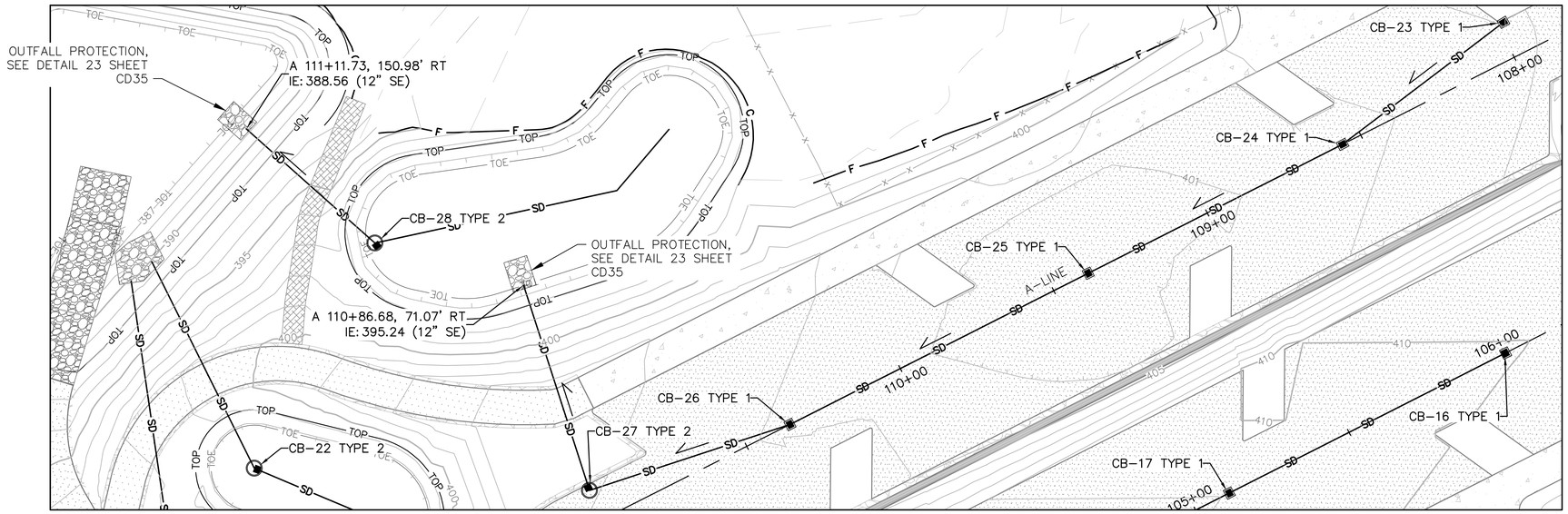

NORTH

0' 10' 20' 40'
SCALE

PLAN VIEW

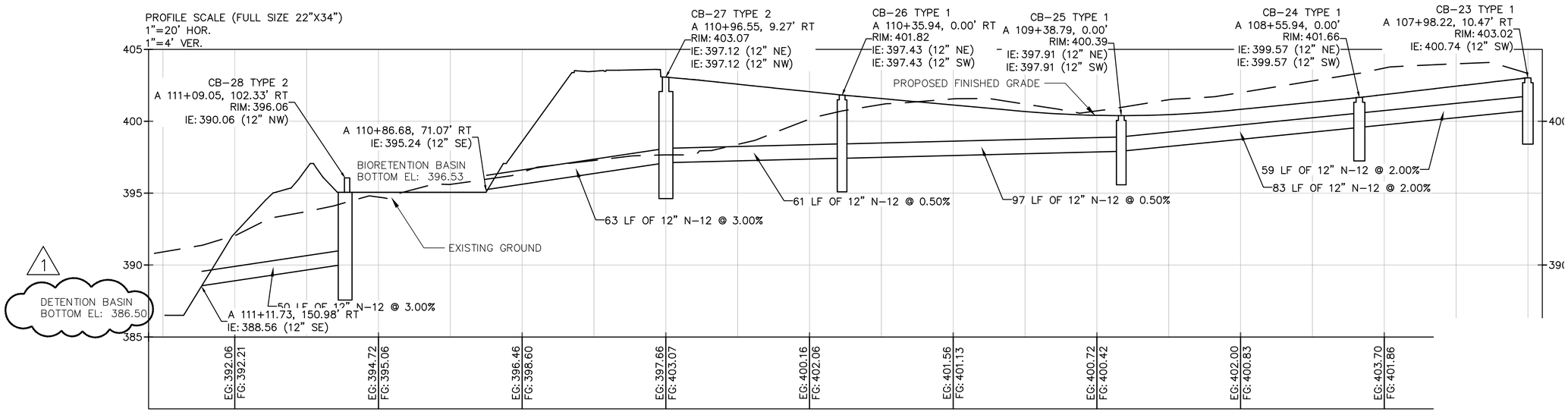

NOTES:
FINISHED GRADE AND EXISTING GROUND AS SHOWN AT STRUCTURE AND PIPE LOCATIONS.

LENGTHS OF PIPE NOT CALCULABLE FROM STATIONS AND OFFSETS.

SEE SHEET CD06 FOR A-LINE ALIGNMENT.

PROFILE VIEW

SKILLINGS

DESIGNED BY:	SURVEYED BY:
S. MOLAMPHY	R. EDWARDS
DRAWN BY:	DATE SURVEYED:
S. MOLAMPHY	October 9, 2026
CHECKED BY:	DATE PLOTTED:
T. SKILLINGS	Oct 9, 2026

THOMAS E. SKILLINGS — STATE OF WASHINGTON — 17952 — REGISTERED PROFESSIONAL ENGINEER — 10/09/2026

NO.	DATE	REVISION	BY	APPROVED
1	10/09/26	ADDENDUM 1		

Pierce County
Parks and Recreation Services
Lakewood Community Center
9112 Lakewood Drive SW
Lakewood, WA 98499
253.798.4081

BID SET

CD18

ORANGEGATE PARK
PHASE 1 IMPROVEMENTS

STORM DRAINAGE PROFILES

P-111031

Drawing: C:\BMS\SKILLINGS-PW-01\TRISTAN ROBERTSON\DM512837\23014_PR_SD_2.DWG Layout Tab: CD15 STORM DRAINAGE PROFILES
Xrefs: L-SHEET CUTS.DWG / X-BASE.DWG / 23014_BP_DR.DWG / PC PARKS TITLEBLOCK.DWG / X-CIVIL CONTOURS.DWG
Date: 10/09/2026 Time: 09:59:14 AM Plotted by: TRISTANROBERTSON

REGION NO.	STATE	FEDERAL AID PROJECT NO.	SHEET NO.	TOTAL SHEETS
10	WA	*N/A*		

811 Know what's below. Call before you dig.

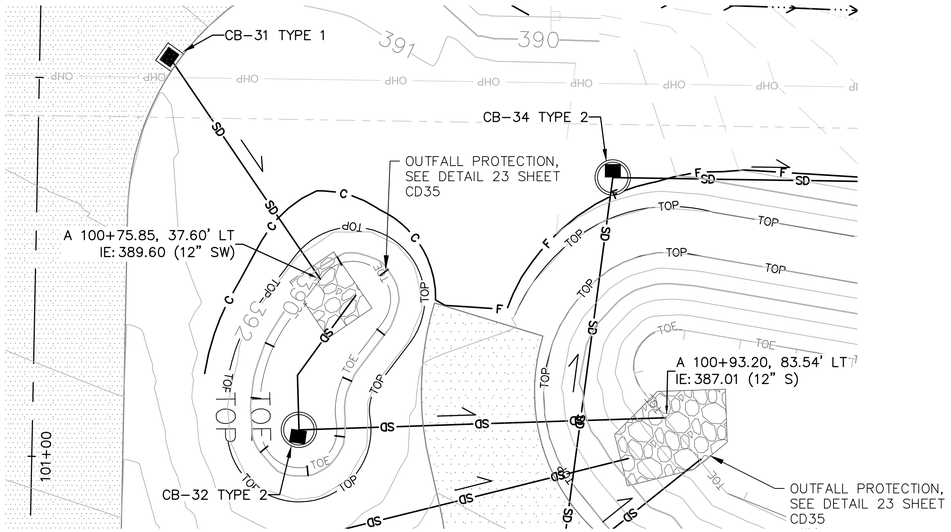

PLAN VIEW

NORTH SCALE 0' 5' 10' 20'

PROFILE SCALE (FULL SIZE 22"X34")
1"=10' HOR.
1"=2' VER.

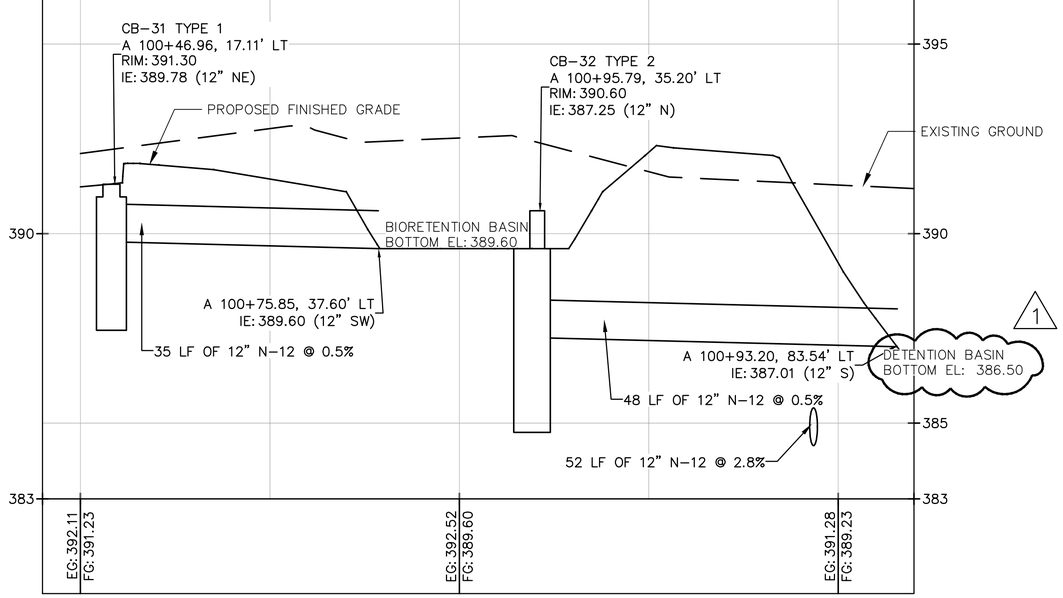

PROFILE VIEW

NOTES:
FINISHED GRADE AND EXISTING GROUND AS SHOWN AT STRUCTURE AND PIPE LOCATIONS.

LENGTHS OF PIPE NOT CALCULABLE FROM STATIONS AND OFFSETS.

SEE SHEET CD06 FOR A–LINE ALIGNMENT.

Drawing: C:\BMS\SKILLINGS-PW-01\TRISTAN ROBERTSON\DMS12837\23014_PR_SD_A.DWG Layout Tab: CD16 STORM DRAINAGE PROFILES
Xrefs: L-SHEET CUTS.DWG / X-BASE.DWG / 23014_BP_DR.DWG / PC PARKS TITLEBLOCK.DWG / 23014_BP_EX_COMPOSITE-TOPO.DWG / X-CIVIL CONTOURS.DWG
Date: 10/09/2026 Time: 10:00:54 AM Plotted by: TRISTANROBERTSON

SKILLINGS

DESIGNED BY:	SURVEYED BY:
S. MOLAMPHY	R. EDWARDS
DRAWN BY:	DATE SURVEYED:
S. MOLAMPHY	October 9, 2026
CHECKED BY:	DATE PLOTTED:
T. SKILLINGS	Oct 9, 2026

THOMAS E. SKILLINGS — STATE OF WASHINGTON — 17952 — REGISTERED PROFESSIONAL ENGINEER — 10/09/2026

NO.	DATE	REVISION	BY	APPROVED
1	10/09/26	ADDENDUM 1		

Pierce County
Parks and Recreation Services
Lakewood Community Center
9112 Lakewood Drive SW
Lakewood, WA 98499
253.798.4081

BID SET

CD19

ORANGEGATE PARK
PHASE 1 IMPROVEMENTS

STORM DRAINAGE PROFILES

P-111031

REGION NO.	STATE	FEDERAL AID PROJECT NO.	SHEET NO.	TOTAL SHEETS
10	WA	*N/A*		

811 Know what's **below.** **Call** before you dig.

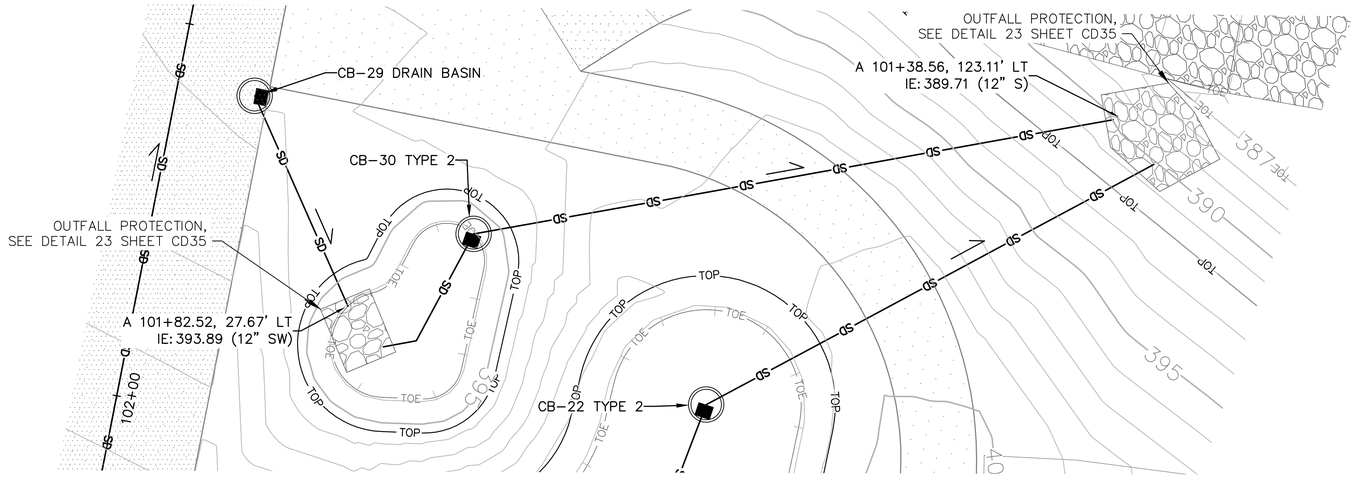

PLAN VIEW

NORTH SCALE 0' 5' 10' 20'

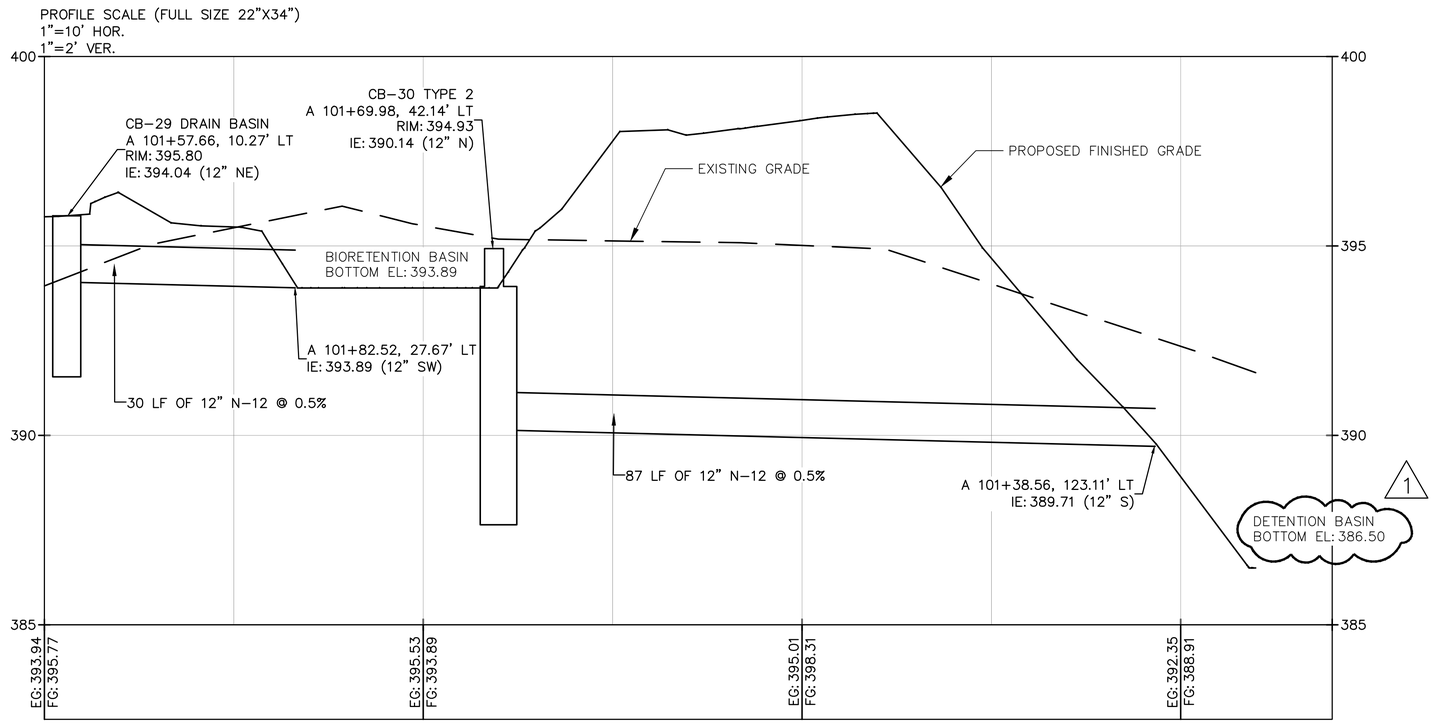

PROFILE VIEW

NOTES:
FINISHED GRADE AND EXISTING GROUND AS SHOWN AT STRUCTURE AND PIPE LOCATIONS.

LENGTHS OF PIPE NOT CALCULABLE FROM STATIONS AND OFFSETS.

SEE SHEET CD06 FOR A–LINE ALIGNMENT.

Drawing: C:\BMS\SKILLINGS-PW-01\TRISTAN ROBERTSON\DMS12837\23014_PR_SD_B.DWG Layout Tab: CD17 STORM DRAINAGE PROFILES
Xrefs: L_SHEET CUTS.DWG / X-BASE.DWG / 23014_BP_DR.DWG / PC PARKS TITLEBLOCK.DWG / 23014_BP_EX_COMPOSITE-TOPO.DWG / X-CIVIL CONTOURS.DWG
Date: 10/09/2026 Time: 10:03:19 AM Plotted by: TRISTANROBERTSON

SKILLINGS

DESIGNED BY:	SURVEYED BY:
S. MOLAMPHY	R. EDWARDS
DRAWN BY:	DATE SURVEYED:
S. MOLAMPHY	October 9, 2026
CHECKED BY:	DATE PLOTTED:
T. SKILLINGS	Oct 9, 2026

THOMAS E. SKILLINGS — STATE OF WASHINGTON — 17952 — REGISTERED PROFESSIONAL ENGINEER — 10/09/2026

NO.	DATE	REVISION	BY	APPROVED
1	10/09/26	ADDENDUM 1		

Pierce County
Parks and Recreation Services
Lakewood Community Center
9112 Lakewood Drive SW
Lakewood, WA 98499
253.798.4081

BID SET

CD20

ORANGEGATE PARK
PHASE 1 IMPROVEMENTS

STORM DRAINAGE PROFILES

P-111031

REGION NO.	STATE	FEDERAL AID PROJECT NO.	SHEET NO.	TOTAL SHEETS
10	WA	*N/A*		

NORTH

SCALE 0' 10' 20' 40'

811 Know what's below. Call before you dig.

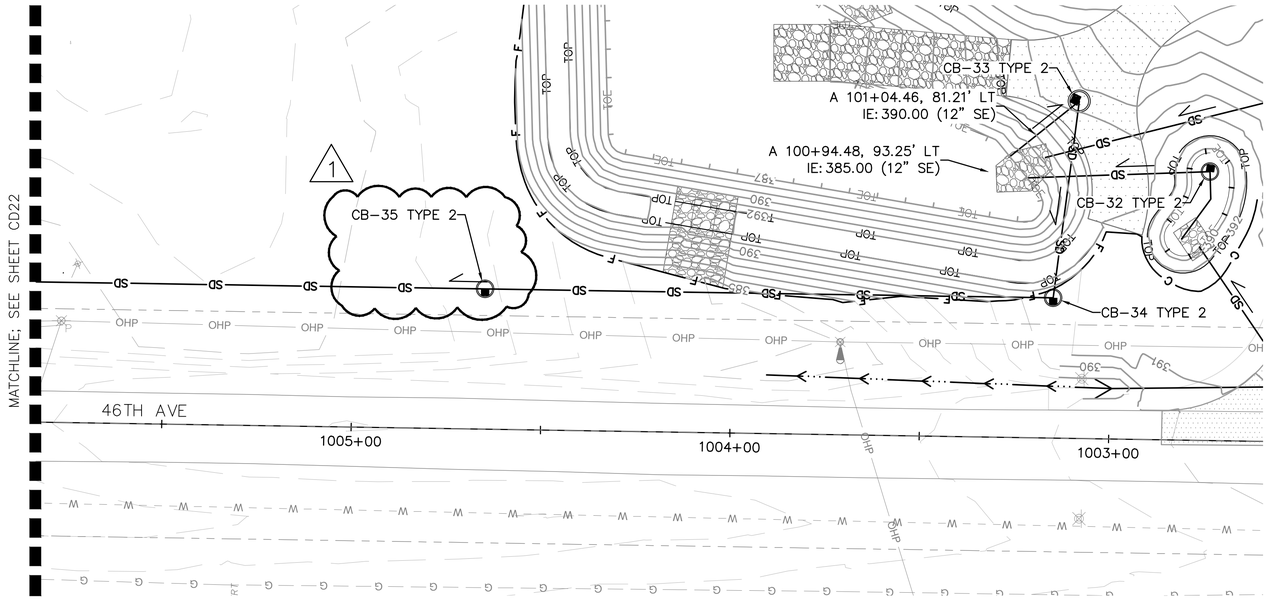

PLAN VIEW

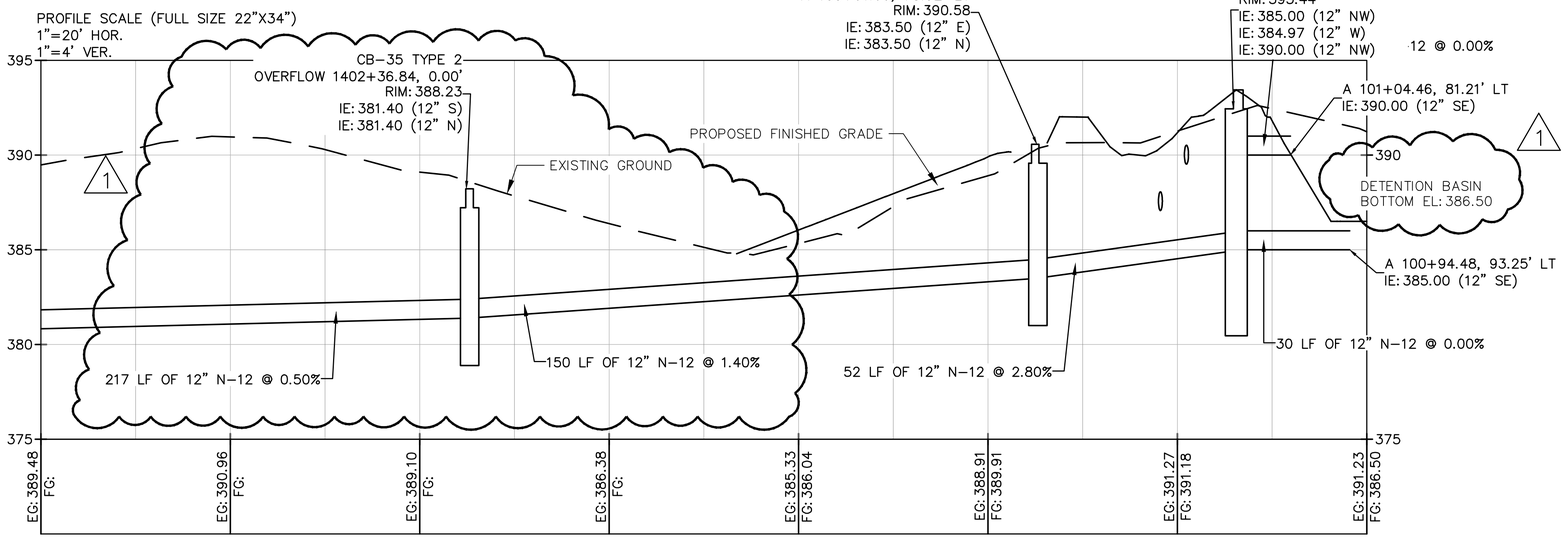

PROFILE VIEW

NOTES:
FINISHED GRADE AND EXISTING GROUND AS SHOWN AT STRUCTURE AND PIPE LOCATIONS.

LENGTHS OF PIPE NOT CALCULABLE FROM STATIONS AND OFFSETS.

SEE SHEET CD06 FOR A-LINE ALIGNMENT.

SEE SHEET HZ01 FOR 46TH AVE ALIGNMENT.

Drawing: C:\BMS\SKILLINGS-PW-01\TRISTAN ROBERTSON\DMS128371\23014_PR_SD_9.DWG Layout Tab: STORM DRAINAGE PROFILES
Xrefs: PC PARKS TITLEBLOCK.DWG / 23014_BP_DR.DWG / X-BASE.DWG / 23014_BP_COMP TOPO.DWG / X-CIVIL CONTOURS.DWG
Date: 10/09/2026 Time: 10:06:25 AM Plotted by: TRISTANROBERTSON

SKILLINGS

DESIGNED BY:	SURVEYED BY:
S. MOLAMPHY	R. EDWARDS
DRAWN BY:	DATE SURVEYED:
S. MOLAMPHY	October 9, 2026
CHECKED BY:	DATE PLOTTED:
T. SKILLINGS	Oct 9, 2026

THOMAS E. SKILLINGS — STATE OF WASHINGTON — 17952 — REGISTERED PROFESSIONAL ENGINEER — 10/09/2026

NO.	DATE	REVISION	BY	APPROVED
1	10/09/26	ADDENDUM 1		

Pierce County
Parks and Recreation Services
Lakewood Community Center
9112 Lakewood Drive SW
Lakewood, WA 98499
253.798.4081

BID SET

CD21

ORANGEGATE PARK
PHASE 1 IMPROVEMENTS

STORM DRAINAGE PROFILES

P-111031

REGION NO.	STATE	FEDERAL AID PROJECT NO.	SHEET NO.	TOTAL SHEETS
10	WA	*N/A*		

NORTH

SCALE 0' 10' 20' 40'

811 Know what's **below.** **Call** before you dig.

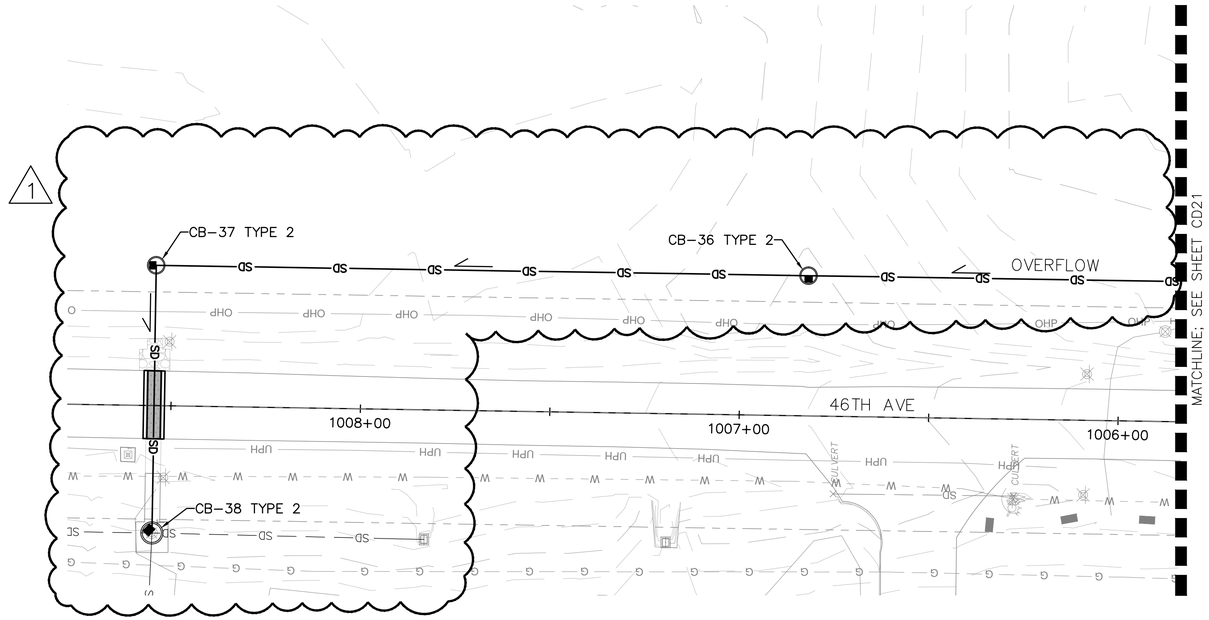

PLAN VIEW

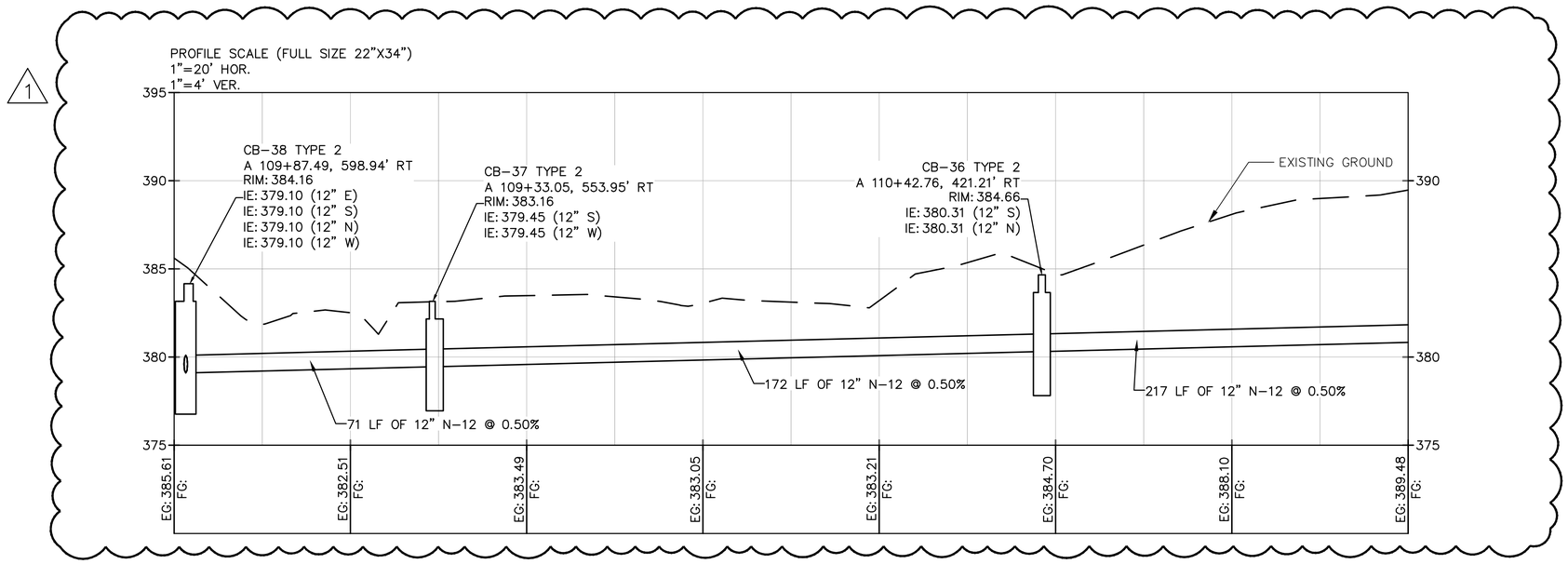

PROFILE VIEW

NOTES:
FINISHED GRADE AND EXISTING GROUND AS SHOWN AT STRUCTURE AND PIPE LOCATIONS.

LENGTHS OF PIPE NOT CALCULABLE FROM STATIONS AND OFFSETS.

SEE SHEET HZ01 FOR 46TH AVE ALIGNMENT.

SKILLINGS

DESIGNED BY: S. MOLAMPHY	SURVEYED BY: R. EDWARDS
DRAWN BY: S. MOLAMPHY	DATE SURVEYED: October 9, 2026
CHECKED BY: T. SKILLINGS	DATE PLOTTED: Oct 9, 2026

THOMAS E. SKILLINGS — STATE OF WASHINGTON — 17952 — REGISTERED PROFESSIONAL ENGINEER — 10/09/2026

NO.	DATE	REVISION	BY	APPROVED
1	10/09/26	ADDENDUM 1		

Pierce County
Parks and Recreation Services
Lakewood Community Center
9112 Lakewood Drive SW
Lakewood, WA 98499
253.798.4081

BID SET

CD22

ORANGEGATE PARK PHASE 1 IMPROVEMENTS

STORM DRAINAGE PROFILES

P-111031

Drawing: C:\BMS\SKILLINGS-PW-01\TRISTAN ROBERTSON\DMS12837\23014_PR_SD_9.DWG Layout Tab: 23014_PR_SD_9
Xrefs: PC PARKS TITLEBLOCK.DWG / 23014_BP_DR.DWG / X-BASE.DWG / 23014_BP_COMP TOPO.DWG / X-CIVIL CONTOURS.DWG
Date: 10/09/2026 Time: 10:06:50 AM Plotted by: TRISTANROBERTSON

REGION NO.	STATE	FEDERAL AID PROJECT NO.	SHEET NO.	TOTAL SHEETS
10	WA	N/A		

811 Know what's below. Call before you dig.

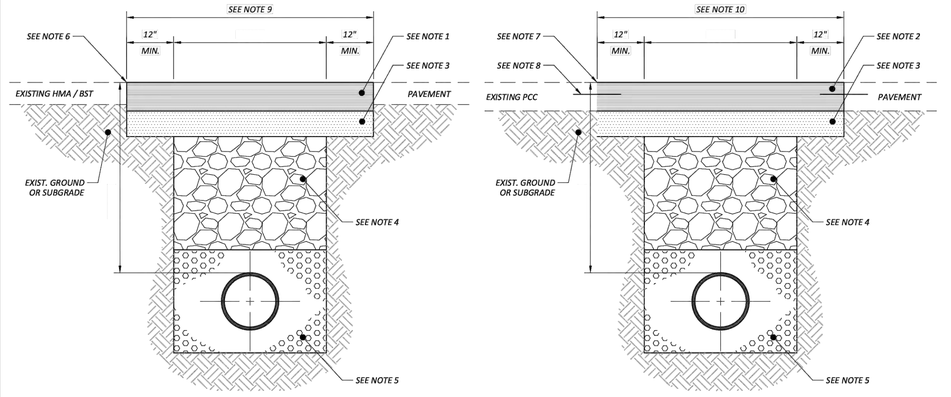

DETAIL FOR HOT MIX ASPHALT (HMA) / BST PAVEMENT UTILITY ROAD CUTS

DETAIL FOR PORTLAND CEMENT CONCRETE PAVEMENT UTILITY ROAD CUTS

(SEE STANDARD DRAWING PC.A7.2 FOR NOTES AND PERMEABLE PAVEMENT ALTERNATIVES)

(NOT TO SCALE)

NOTES:

1) HOT MIX ASPHALT (HMA) CL. 1/2 IN. PG 64-22, WITH MINIMUM COMPACTED DEPTH OF 3" OR EXISTING PAVEMENT DEPTH PLUS 1", WHICHEVER IS GREATER. PLACE IN LIFTS WITH A MAXIMUM COMPACTED DEPTH OF 3" PER WSDOT STANDARD SPECIFICATIONS 5-04, AND MACHINE ROLL FLUSH WITH EXISTING PAVEMENT.

2) PORTLAND CEMENT CONCRETE PAVEMENT WITH A STANDARD PAVING SECTION EQUAL TO THE EXISTING PAVEMENT DEPTH. PLACE PER WSDOT STANDARD SPECIFICATIONS 5-05. THE ENGINEER MAY SPECIFY THE DESIGN AGE. ANY ASPHALT CONCRETE COVERING THE PORTLAND CEMENT CONCRETE SHALL BE CUT BACK AN ADDITIONAL 4" AND REPLACED WITH HMA CL. 1/2 IN. PG 64-22, COMPACTED TO A DEPTH EQUAL TO THAT OF THE EXISTING ASPHALT CONCRETE PAVEMENT, OR PUT CSBC AS PREFERRED ALTERNATIVE.

3) CRUSHED SURFACING TOP COURSE MATCH EXISTING 2" MINIMUM DEPTH, COMPACTED TO 95% MAXIMUM DENSITY.

4) IMPORTED OR NATIVE MATERIAL COMPACTED TO 95% MAXIMUM DENSITY. THE MATERIAL SHALL BE ESSENTIALLY FREE FROM VARIOUS TYPES OF WOOD WASTE OR OTHER EXTRANEOUS OR OBJECTIONABLE MATERIALS. IT SHALL HAVE SUCH CHARACTERISTICS OF SIZE AND SHAPE THAT IT WILL COMPACT READILY AND SHALL MEET THE FOLLOWING TEST REQUIREMENTS:

SIEVE SIZE	PERCENT PASSING
4" SQUARE	100
2" SQUARE	75-100
U.S. No. 4	22-100
U.S. No. 200	0-10
DUST RATIO: % PASSING U.S. No. 200 / % PASSING U.S. No. 40	2/3 MAX.
SAND EQUIVALENT	30 MIN.

ALL PERCENTAGES ARE BY WEIGHT.
THE MATERIAL RETAINED ON A U.S. No. 4 SIEVE SHALL CONTAIN NOT MORE THAN 0.20 PERCENT BY WEIGHT OF WOOD WASTE. ANY NATIVE MATERIAL USED SHALL BE TESTED FOR COMPACTION AND/OR GRADATION AS REQUIRED BY THE ENGINEER.

5) BEDDING MATERIAL COMPACTED TO 95% MAXIMUM DENSITY SHALL CONSIST OF CRUSHED, PROCESSED, OR NATURALLY OCCURRING GRANULAR MATERIAL. IT SHALL BE FREE FROM VARIOUS TYPES OF WOOD WASTE OR OTHER EXTRANEOUS OR OBJECTIONABLE MATERIALS. IT SHALL HAVE SUCH CHARACTERISTICS OF SIZE AND SHAPE THAT IT WILL COMPACT AND SHALL MEET THE FOLLOWING SPECIFICATIONS FOR GRADING AND QUALITY:

SIEVE SIZE	PERCENT PASSING
1-1/2" SQUARE	100
1" SQUARE	75-100
5/8" SQUARE	50-100
U.S. No. 4	20-80
U.S. No. 40	3-24
U.S. No. 200	10.0 MAX
SAND EQUIVALENT	35 MIN.

IF, IN THE OPINION OF THE ENGINEER, THE NATIVE GRANULAR MATERIAL IS FREE FROM WOOD WASTE, ORGANIC MATERIAL, AND OTHER EXTRANEOUS OR OBJECTIONABLE MATERIALS, BUT OTHERWISE DOES NOT CONFORM TO THE SPECIFICATIONS FOR GRADING AND SAND EQUIVALENT, IT MAY BE USED FOR PIPE BEDDING FOR RIGID PIPES, PROVIDED THE NATIVE GRANULAR MATERIAL HAS A MAXIMUM DIMENSION OF 1-1/2 INCHES. DEPTH OF MATERIAL SURROUNDING PIPE SHALL BE ADEQUATE TO SUPPORT THE PIPE AND TRENCH.

BEDDING MATERIAL FOR SANITARY SEWERS -
PEA GRAVEL BEDDING SHALL BE A CLEAN, SOUND, FREE DRAINING, AND GRANULAR MATERIAL CONFORMING TO THE FOLLOWING GRADATION:

SIEVE SIZE	PERCENT PASSING
3/4" SQUARE	100
3/8" SQUARE	90-100
U.S. No. 4	50-100
U.S. No. 10	0-95
U.S. No. 20	0-85
U.S. No. 40	0-55
U.S. No. 100	0-10
U.S. No. 200	0-3

ALL PERCENTAGES ARE BY WEIGHT.

6) NEAT, UNIFORM AND VERTICAL CUT (TYPICAL BOTH SIDES). CLEAN AND HEAT EDGES AND TACK WITH EMULSIFIED ASPHALT. SEAL JOINT WITH HOT ASPHALT CEMENT.

7) NEAT, UNIFORM AND VERTICAL CUT (TYPICAL BOTH SIDES).

8) DRILL 7/8"Ø TO 1"Ø X 12" HOLE AND SET #5 X 24" EPOXY-COATED TIE BARS WITH EPOXY RESIN INTO THE EXISTING PAVEMENT PARALLEL TO ROADWAY CENTER LINE ALONG THE TRANSVERSE VERTICAL CUT SPACED AT 18" ON CENTER (TYPICAL BOTH SIDES).

9) MINIMUM RESTORATION LIMITS FOR HMA UNLESS OTHERWISE DETERMINED BY THE ENGINEER. IF ANY PORTION OF A LONGITUDINAL PAVEMENT CUT AFFECTS A WHEEL TRACK AS DETERMINED BY THE ENGINEER, THE ENTIRE LANE SHALL BE REMOVED AND REPLACED. WHEREVER AN EXISTING PATCH OR CRACK IS IN CLOSE PROXIMITY TO THE NEW CUT, THE ENGINEER MAY REQUIRE REMOVAL OF THE EXISTING PATCH OR CRACK AND ANY INTERVENING PAVEMENT. DEPTH OF REPLACEMENT ASPHALT SHALL BE IN ACCORDANCE WITH NOTE 1.

10) MINIMUM RESTORATION LIMITS FOR PCC UNLESS OTHERWISE DETERMINED BY THE ENGINEER. REMOVE ENTIRE PANEL UNLESS WIDTH OF REMAINING PANEL PORTION IS GREATER THAN 50% OF THE EXISTING PANEL WIDTH. IF ANY PORTION OF A LONGITUDINAL PAVEMENT CUT AFFECTS A WHEEL TRACK AS DETERMINED BY THE ENGINEER, THE ENTIRE LANE SHALL BE REMOVED AND REPLACED. WHEREVER AN EXISTING PATCH OR CRACK IS IN CLOSE PROXIMITY TO THE NEW CUT, THE ENGINEER MAY REQUIRE REMOVAL OF THE EXISTING PATCH OR CRACK AND ANY INTERVENING PAVEMENT. IF THE ENTIRE PANEL IS NOT REMOVED, FOLLOW ASPHALT CONCRETE UTILITY PATCH PROCEDURES WITH AN ASPHALT CONCRETE PAVING DEPTH EQUAL TO THE DEPTH OF THE EXISTING PAVEMENT.

11) ALL PERMANENT FINAL PATCHES SHALL BE RECTANGULAR OR CIRCULAR IN SHAPE AND CONSTRUCTED TO BE PARALLEL AND PERPENDICULAR TO THE ROAD CENTERLINE.

12) CONTROLLED DENSITY FILL (CDF) SHALL BE REQUIRED ON ROADWAYS WHERE DIFFICULT SUBSURFACE CONDITIONS ARE ANTICIPATED AND SHALL BE PLACED IN ACCORDANCE WITH WSDOT STANDARD SPECIFICATIONS 2-09.3(1)E.

13) FOR PERMEABLE PAVEMENT ALTERNATIVES SEE PIERCE COUNTY STORMWATER MANAGEMENT AND SITE DEVELOPMENT MANUAL. MINIMUM RESTORATION LIMITS DETERMINED BY THE ENGINEER.

(SEE STANDARD DRAWING PC.A7.1 FOR DETAIL DRAWINGS)

CORRECTION FOR DETAIL 8:
NOTE 12 – CONTROLLED DENSITY FILL (CDF) SHALL BE REQUIRED ON ROADWAYS WHERE DIFFICULT SUBSURFACE CONDITIONS ARE ANTICIPATED AND SHALL BE PLACED IN ACCORDANCE WITH WSDOT SPECIFICATION IS 3–07.3(1)E.

Pierce County
Office of the County Engineer

APPROVED BY: COUNTY ENGINEER
3/14/2025
DATE

UTILITY PATCH
SHEET 1 OF 2
STANDARD DRAWING PC.A7.1

Pierce County
Office of the County Engineer

APPROVED BY: COUNTY ENGINEER
3/14/2025
DATE

UTILITY PATCH
SHEET 2 OF 2
STANDARD DRAWING PC.A7.2

UTILITY PATCH 7
NTS

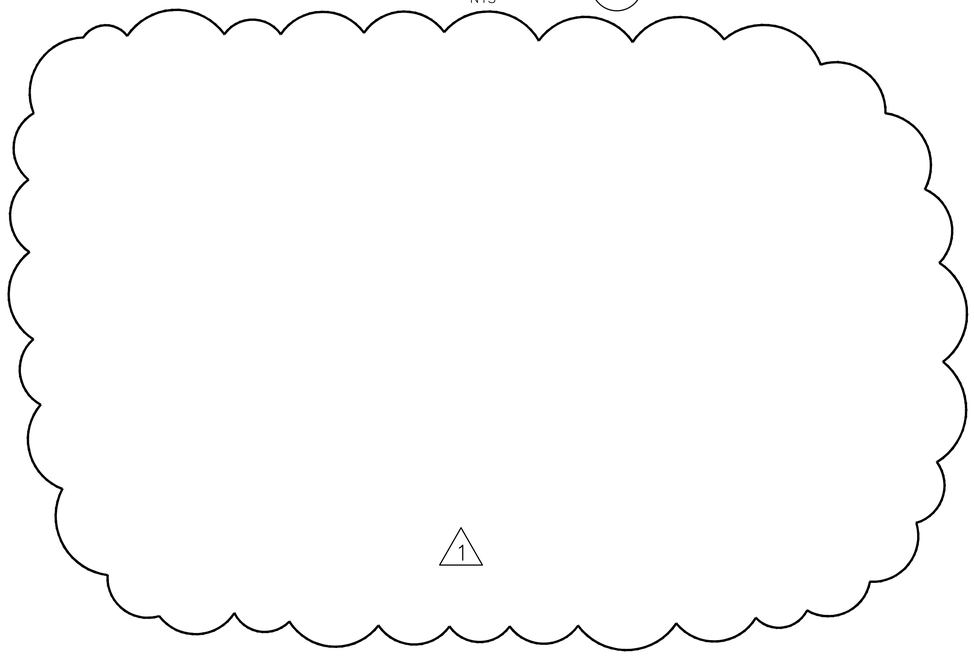

UTILITY PATCH 8
NTS

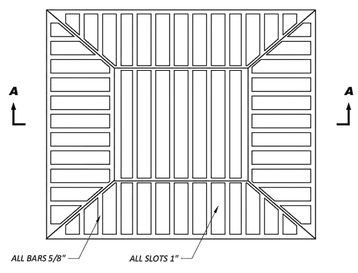

PLAN

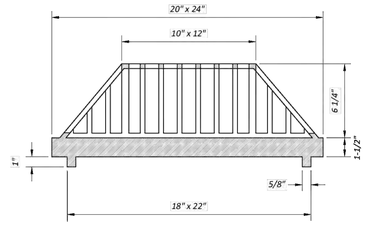

SECTION A-A

NOTES:

1) USE WITH WSDOT STANDARD PLAN B-30.10-XX RECTANGULAR FRAME (REVERSIBLE).

2) MATERIAL TO CONFORM TO WSDOT STANDARD SPECIFICATIONS 9-05.15(2).

(NOT TO SCALE)

Pierce County
Office of the County Engineer

APPROVED BY: COUNTY ENGINEER
3/12/2025
DATE

BEEHIVE GRATE
STANDARD DRAWING PC.B1.3

BEHIVE GRATE 10
NTS

SKILLINGS

DESIGNED BY: S. MOLAMPHY	SURVEYED BY: R. EDWARDS
DRAWN BY: S. MOLAMPHY	DATE SURVEYED: October 9, 2026
CHECKED BY: T. SKILLINGS	DATE PLOTTED: Oct 9, 2026

THOMAS E. SKILLINGS STATE OF WASHINGTON 17952 REGISTERED PROFESSIONAL ENGINEER
10/09/2026

NO.	DATE	REVISION	BY	APPROVED
1	10/09/26	ADDENDUM 1		

Pierce County
Parks and Recreation Services
Lakewood Community Center
9112 Lakewood Drive SW
Lakewood, WA 98499
253.798.4081

BID SET

CD31

ORANGEGATE PARK
PHASE 1 IMPROVEMENTS

STORM DRAINAGE DETAILS

P-111031

Drawing: C:\BMS\SKILLINGS-PW-01\TRISTAN ROBERTSON\DMS12837\23014_DE_SD_3.DWG Layout Tab: STORM DRAINAGE DETAILS
Xrefs: 23014_BP_DE_SD.DWG / PC PARKS TITLEBLOCK.DWG
Date: 10/09/2026 Time: 10:09:13 AM Plotted by: TRISTANROBERTSON

REGION NO.	STATE	FEDERAL AID PROJECT NO.	SHEET NO.	TOTAL SHEETS
10	WA	*N/A*		

Know what's below. Call before you dig.

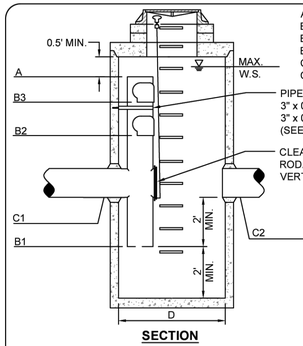

SECTION

A = PIPE DIAM.
B1 = BOTTOM ORIFICE
B2 = MIDDLE ORIFICE
B3 = TOP ORIFICE
C1 = CB OUTLET I.E.
C2 = CB INLET I.E.

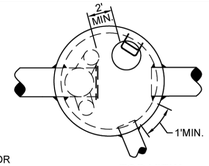

TOP VIEW

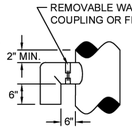

ORIFICE DETAIL

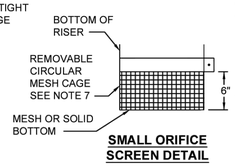

SMALL ORIFICE SCREEN DETAIL

NOTES:

1. CATCH BASIN TYPE 2 WITH FLOW RESTRICTOR AND OIL POLLUTION CONTROL DEVICE.
2. PROVIDE ACCESS TO BOTTOM WITH LADDER AND CLEARANCE.
3. THE EMERGENCY OVERFLOW SPILLWAY ELEVATION SHALL BE EQUAL OR HIGHER THAN MAX W.S. ELEV. SEE EMERGENCY OVERFLOW SPILLWAY DETAIL 7.0.
4. MAX W.S. ELEV. SHALL EQUAL 100 YEAR DESIGN FLOW.
5. LADDER / STEPS SHALL BE 1" Ø GALVANIZED STEEL OR THERMO PLASTIC EXTRUDED.
6. ORIFICE DIAMETER 0.5' MIN.
7. PROVIDE MESH CAGE PROTECTION FOR ORIFICE IF LESS THAN ½" DIAMETER. BOLT REMOVABLE MESH CAGE TO RISER WITH ATTACHED BOLT-ON BANDED COUPLING. CAGE TO BE MADE WITH ¼" MESH SCREEN IN ALUMINUM OR STAINLESS STEEL.
8. THE PIPE SUPPORTS AND THE FLOW RESTRICTOR SHALL BE CONSTRUCTED OF THE SAME MATERIAL AND BE ANCHORED AT A MAX. SPACING OF 36". ATTACH THE PIPE SUPPORTS TO THE MANHOLE WITH 5/8" STAINLESS STEEL EXPANSION BOLTS OR EMBED THE SUPPORTS INTO THE MANHOLE WALL 2".

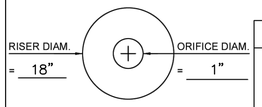

RESTRICTOR PLATE (B1) DETAIL

CONTROL STRUCTURE DETAIL TABLE

LOCATION	A OVERFLOW		B1		B2		B3		C1		C2		D (IN.)	MAX. WS ELEV. NOTE 4	EMER OVER FLOW NOTE 3
	ELEV.	DIAM.	ELEV.	DIAM.	ELEV.	DIAM.	ELEV.	DIAM.	ELEV.	DIAM.	ELEV.	DIAM.			
	390'	18"	385'	1"	387 3/4'	1 1/2"	--	--	387'	12"	387'	12"	60"	390"	391 3/4"

Pierce County Planning and Public Works 2401 S 35th St. Tacoma, Washington 98409	**CONTROL STRUCTURE** **SECTION A - 12.0**	ORDINANCE: 2021-45 EFFECTIVE DATE: 7/1/2021

CONTROL STRUCTURE FOR DETENTION POND 17
NTS

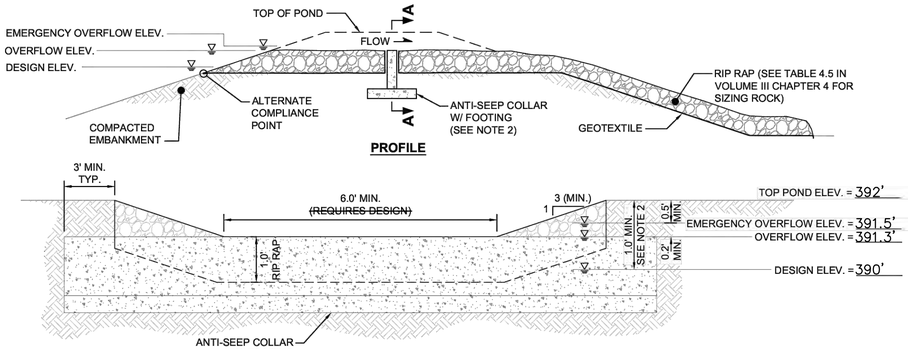

PROFILE

SECTION A-A

NOTES:

1) THE EMERGENCY OVERFLOW SPILLWAY SHALL BE DESIGNED TO PASS THE 100-YEAR, DESIGN STORM EVENT FOR DEVELOPED CONDITIONS SEE EQUATION AT VOLUME III CHAPTER 3. SPILLWAY SHOULD ONLY HAVE FLOW WHEN A COMPONENT OF THE CONTROL STRUCTURE HAS FAILED OR A STORM GREATER THAN THE DESIGN STORM HAS OCCURRED.

2) SPILLWAY SHALL HAVE AN ANTI-SEEP COLLAR TO HOLD OVERFLOW WATER SURFACE ELEVATION OR THE OVERFLOW WATER SURFACE ELEVATION SHALL BE BELOW THE ALTERNATE COMPLIANCE POINT. ENGINEER WILL DESIGN THE ANTI-SEEP COLLAR AND PROVIDE RE-BAR LAYOUT IN ADDITIONAL DETAIL.

3) A CONCRETE LINED SPILLWAY IS AN ACCEPTABLE ALTERNATIVE TO AN ANTI-SEEP COLLAR.

Pierce County Planning and Public Works 2401 S 35th St. Tacoma, Washington 98409	**EMERGENCY OVERFLOW SPILLWAY** **SECTION A - 7.0**	ORDINANCE: 2021-45 EFFECTIVE DATE: 7/1/2021

EMERGENCY OVERFLOW SECTION 18
NTS

RIP RAP SHALL BE AGGREGATE AS FOLLOWS:

MAXIMUM STONE SIZE: 12"
MEDIAN STONE SIZE: 8"
MINIMUM STONE SIZE: 2"

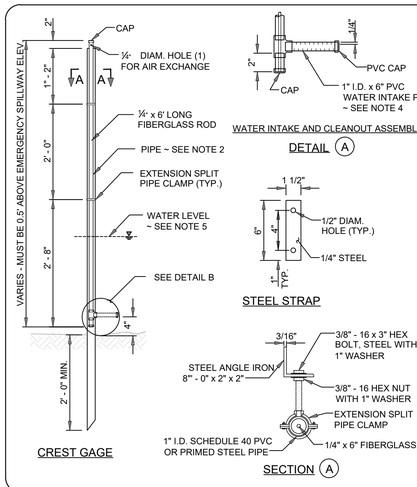

CREST GAGE

WATER INTAKE AND CLEANOUT ASSEMBLY

DETAIL (A)

STEEL STRAP

SECTION (A)

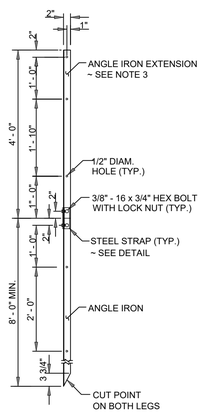

ANGLE IRON DETAIL
(SHOWN WITH EXTENSION)

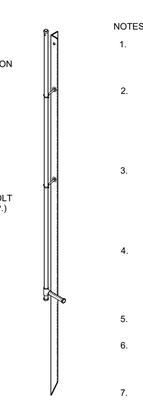

ISOMETRIC VIEW

NOTES

1. ALL ANGLE IRONS AND STEEL STRAPS SHALL BE GALVANIZED IN ACCORDANCE WITH ASSHTO M 232.
2. PIPE, CAPS, AND T-ADAPTER SHALL BE 1" I.D. WHITE PVC, OR PRIMED STEEL, EXCEPT THE WATER INTAKE PIPE SHALL BE WHITE PVC. PIPE SHALL BE SCH. 40. ALL PIPE JOINTS SHALL BE THREADED.
3. GAGE ASSEMBLY PIPE, FIBERGLASS ROD, AND ANGLE IRON CAN BE EXTENDED AS NEEDED TO FIT SITE REQUIREMENTS. EXTRA PIPE CLAMPS SHALL BE ADDED FOR SECURITY.
4. SCORE THE WATER INTAKE PIPE 1/4" DEEP, 1/32" WIDE (WIDTH OF SAW BLADE), EVERY 1/2", ALTERNATING CUTS ON TOP AND BOTTOM FOR DRAINAGE. PLACE AT LOWEST WATER LEVEL.
5. WATER LEVEL MAY VARY, DEPENDING ON SEASON.
6. POUR IN APPROXIMATELY 1 TABLESPOON OF CORK DUST AT INSTALLATION, AND AFTER EACH READING.
7. ALTERNATIVE ANCHORING METHODS MY BE APPROVED BY COUNTY.

Pierce County Planning and Public Works 2401 S 35th St. Tacoma, Washinton 98409	CREST GAGE SECTION A - 25.0	ORDINANCE: 2021-45 EFFECTIVE DATE: 7/1/2021

DETENTION POND CREST GAGE 19
NTS

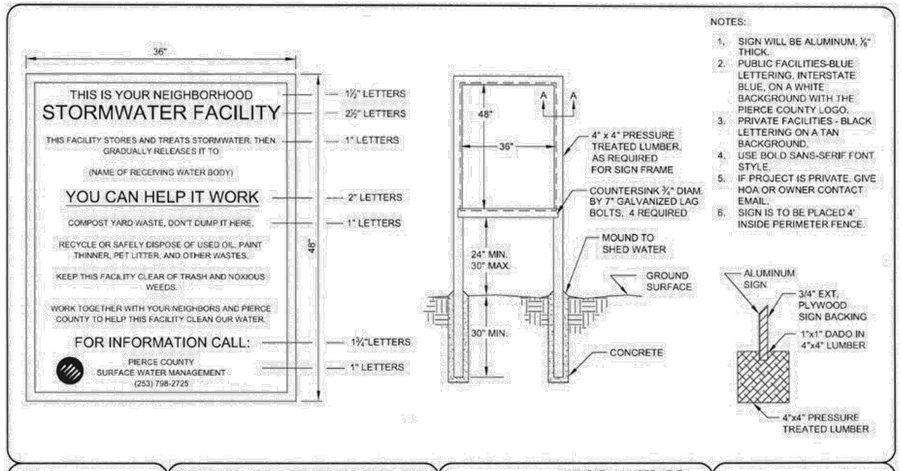

NOTE:
1. THE POND IS CONSIDERED PRIVATE, THEREFORE THE "FOR INFORMATION" SECTION SHALL INSTEAD READ:

"
PIERCE COUNTY PARKS AND RECREATION
PCPARKS@PIERCECOUNTYWA.GOV
(253) 798-4177
"

2. THE PIERCE COUNTY SYMBOL SHALL NOT BE REMOVED FROM THE SIGN.

6/2015	2015 SWMM UPDATE	HPH	RUTKOSKY
6/2012	2012 SWMM UPDATE	HPH	RUTKOSKY
5/2008	PUBLISH DATE	HPH	RUTKOSKY
DATE	REVISION	APPR'D	DRAWN

Pierce County
Public Works
Surface Water Management Division
2702 S 42nd Street, Suite 201
Tacoma, Washington 98409-7322

HANS P. HUNGER, P.E.
C.I.P. MANAGER

Surface Water Management Division

ALUMINUM PROJECT SIGN

(NOT TO SCALE)
1.0

POND SIGN 20
NTS

SKILLINGS

DESIGNED BY: S. MOLAMPHY	*SURVEYED BY:* R. EDWARDS
DRAWN BY: S. MOLAMPHY	*DATE SURVEYED:* October 9, 2026
CHECKED BY: T. SKILLINGS	*DATE PLOTTED:* Oct 9, 2026

THOMAS E. SKILLINGS — STATE OF WASHINGTON — 17952 — REGISTERED PROFESSIONAL ENGINEER — 10/09/2026

NO.	DATE	REVISION	BY	APPROVED
1	10/09/26	ADDENDUM 1		

Pierce County
Parks and Recreation Services
Lakewood Community Center
9112 Lakewood Drive SW
Lakewood, WA 98499
253.798.4081

BID SET

CD34

ORANGEGATE PARK
PHASE 1 IMPROVEMENTS

STORM DRAINAGE DETAILS

P-111031

Drawing: C:\BMS\SKILLINGS-PW-01\TRISTAN ROBERTSON\DMS12837\23014_DE_SD_8.DWG Layout Tab: STORM DRAINAGE DETAILS
Xrefs: 23014_BP_DE_SD.DWG / PC PARKS TITLEBLOCK.DWG
Date: 10/09/2026 Time: 10:11:01 AM Plotted by: TRISTANROBERTSON

REGION NO.	STATE	FEDERAL AID PROJECT NO.	SHEET NO.	TOTAL SHEETS
10	WA	*N/A*		

811 Know what's below. Call before you dig.

TACOMA WATER TRANSMISSION MAIN NOTES:

1. CONTRACTOR SHALL NOTIFY TACOMA WATER AT LEAST SEVENTY–TWO (72) HOURS PRIOR TO WORK ACTIVITIES WITHIN TEN (10) FEET HORIZONTAL DISTANCE FROM TACOMA WATER MAINS. CONTACT CRAIG WEST AT 253–405–8821 OR CWEST@TACOMA.GOV.
2. NO CONSTRUCTION ACTIVITIES, INCLUDING THE PARKING OF EQUIPMENT OR THE STAGING OF MATERIALS, SHALL BE ALLOWED ON OR WITHIN FIVE (5) FEET OF THE TACOMA WATER TRANSMISSION MAINS WITHOUT THE APPROVAL OF A TACOMA WATER REPRESENTATIVE. CONTRACTOR SHALL DELINEATE AND MARK IN THE FIELD A MINIMUM OF FIFTEEN (15) FEET FROM THE EDGE OF THE TRANSMISSION MAIN.
3. MONITOR THE TACOMA WATER TRANSMISSION MAIN FOR MOVEMENT AND EXPOSURE TO VIBRATION AS DIRECTED BY TACOMA WATER.
4. STEEL PLATING MUST BE PLACED OVER THE TRANSMISSION MAIN WHEN ANY HEAVY EQUIPMENT LOAD IS PLACED WITHIN THE AREA DELINEATED FOR PROTECTION AS NOTED ABOVE.
5. BACKFILL AND BEDDING AROUND THE TRANSMISSION MAIN EXTENDING FIVE (5) FEET HORIZONTALLY AND FIVE (5) FEET VERTICALLY FROM THE EDGE OF PIPE MUST NOT BE DISTURBED WITHOUT THE APPROVAL OF A TACOMA WATER REPRESENTATIVE. DISTURBED MATERIAL SHALL BE RESTORED TO THE SATISFACTION OF TACOMA WATER.
6. CHAMBERS/VAULTS LOCATED ADJACENT TO THE PIPELINE MUST BE LEFT INTACT AND ACCESSIBLE DURING CONSTRUCTION.
7. IN CASE OF WATER MAIN EMERGENCY, IMMEDIATELY NOTIFY TACOMA WATER AT 253–502–8910.

[#] KEY NOTES:

1. 1' PORTLAND CEMENT CONCRETE PER WSDOT SPEC 9–01.2(1).
2. 0.17' CRUSHED SURFACING TOP COURSE PER WSDOT SPEC 9–03.9(3).
3. 0.25' CRUSHED SURFACING BASE COURSE PER WSDOT SPEC 9–03.9(3).

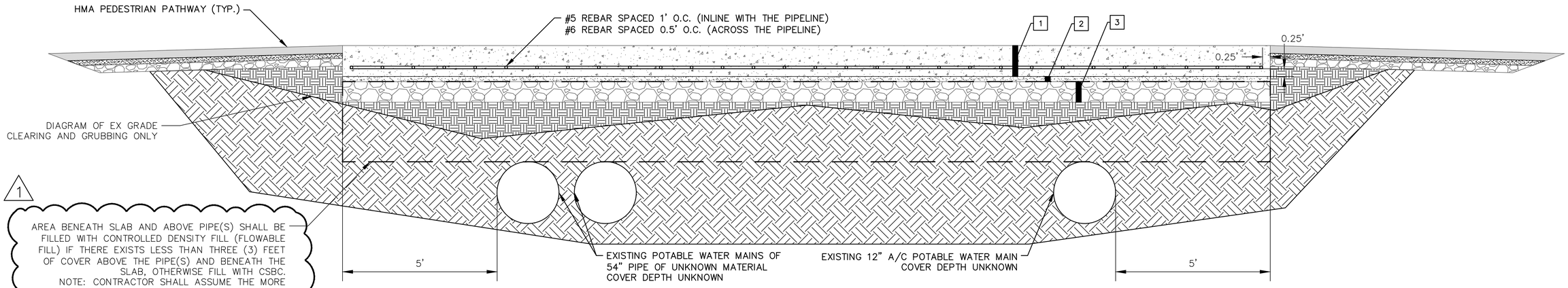

SUMMIT WATER NOTES:
SUMMIT WATER AND SUPPLY COMPANY'S 12" A/C MAINLINE IS FITTED WITH 45° BENDS AND IS INSTALLED BELOW TPU'S 54" TRANSMISSION MAINS.

GENERAL NOTES:

1. PORTLAND CEMENT CONCRETE (PCC) SHALL FOLLOW WSDOT STD. SPEC. 5–05 CEMENT CONCRETE PAVEMENT.
2. CRUSHED SURFACING TOP COURSE (CSTC) AND CRUSHED SURFACING BASE COURSE (CSBC) SHALL FOLLOW WSDOT STD. SPEC. 4–04 BALLAST AND CRUSHED SURFACING.
3. COMMON BORROW FILL SHALL BE COMPACTED PER WSDOT STD. SPEC. 2–03.3(14)C COMPACTING EARTH EMBANKMENTS, METHOD C USING SMALL MECHANICAL OR VIBRATORY COMPACTORS.
4. CONTRACTOR SHALL BE RESPONSIBLE FOR POTHOLING AND FIELD LOCATING TACOMA POWER UTILITY AND SUMMIT WATER & SUPPLY COMPANY'S WATER LINES. LOCATION OF LINES IN DETAIL ARE FOR DEMONSTRATION PURPOSES ONLY.
5. SEE CP02 FOR TYPICAL SECTION VIEW.

WATER PIPE PROTECTIVE SLAB DETAIL

NTS

SKILLINGS

DESIGNED BY: S. MOLAMPHY	*SURVEYED BY:* R. EDWARDS
DRAWN BY: S. MOLAMPHY	*DATE SURVEYED:* October 9, 2026
CHECKED BY: T. SKILLINGS	*DATE PLOTTED:* Oct 9, 2026

THOMAS E. SKILLINGS — STATE OF WASHINGTON — 17952 — REGISTERED PROFESSIONAL ENGINEER — 10/09/2026

NO.	DATE	REVISION	BY	APPROVED
1	10/09/26	ADDENDUM 1		

Pierce County
Parks and Recreation Services
Lakewood Community Center
9112 Lakewood Drive SW
Lakewood, WA 98499
253.798.4081

BID SET

CP09

ORANGEGATE PARK
PHASE 1 IMPROVEMENTS

PAVING DETAILS

P-111031

Drawing: C:\BMS\SKILLINGS-PW-01\TRISTAN ROBERTSON\DMS12837\23014_DE_PV_2.DWG Layout Tab: PAVING DETAILS
Xrefs: PC PARKS TITLEBLOCK.DWG / 23014_BP_DE_PV.DWG
Date: 10/09/2026 Time: 10:12:49 AM Plotted by: TRISTANROBERTSON

REGION NO.	STATE	FEDERAL AID PROJECT NO.	SHEET NO.	TOTAL SHEETS
10	WA	*N/A*		

811 Know what's below. Call before you dig.

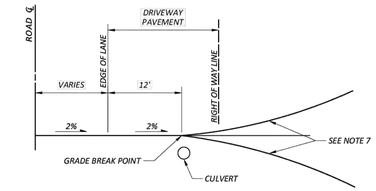

CROSS SECTION

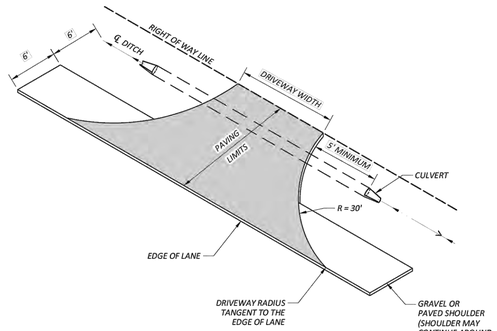

NOTES:

1) *DRIVEWAY WIDTH = 15' MINIMUM TO 25' MAXIMUM, OR 30' MAXIMUM FOR THREE CAR GARAGE ON LOCAL ROAD.*
2) *DRIVEWAY PAVING = 2" MINIMUM COMPACTED DEPTH HOT MIX ASPHALT CL. 1/2 IN. OVER 2" MINIMUM COMPACTED DEPTH CRUSHED SURFACING TOP COURSE, OR 6" MINIMUM CEMENT CONCRETE.*
3) *ENGINEERED PAVEMENT DESIGN REQUIRED FOR ARTERIAL ROADS.*
4) *STORM DRAINAGE FROM DRIVEWAY SHALL NOT BE PERMITTED TO DRAIN ONTO ROADWAY SURFACE, UNLESS ACCOUNTED FOR IN DESIGN.*
5) *DRIVEWAY SHALL NORMALLY BE AT 90 DEGREES TO ROAD CENTERLINE, BUT CAN VARY FROM 75 DEGREES TO 90 DEGREES.*
6) *12" MINIMUM CONCRETE CULVERT, LENGTH AS DETERMINED BY WIDTH OF DRIVEWAY, PLUS 5' AT EACH END, WITH BEVELED END SECTIONS.*
7) *RECOMMENDED MAXIMUM GRADES +/- 15% BEYOND GRADE BREAK POINT. VERTICAL CURVES NOT TO EXCEED A 3 1/4" CREST OR A 1" SAG IN A 10' CHORD.*

(NOT TO SCALE)

Pierce County
Office of the County Engineer

APPROVED BY: COUNTY ENGINEER
3/12/2025
DATE

MAJOR DRIVEWAY APPROACH, SHOULDER AND OPEN DRAINAGE

STANDARD DRAWING PC.F5.1

STANDARD DRIVEWAY SECTION

NTS

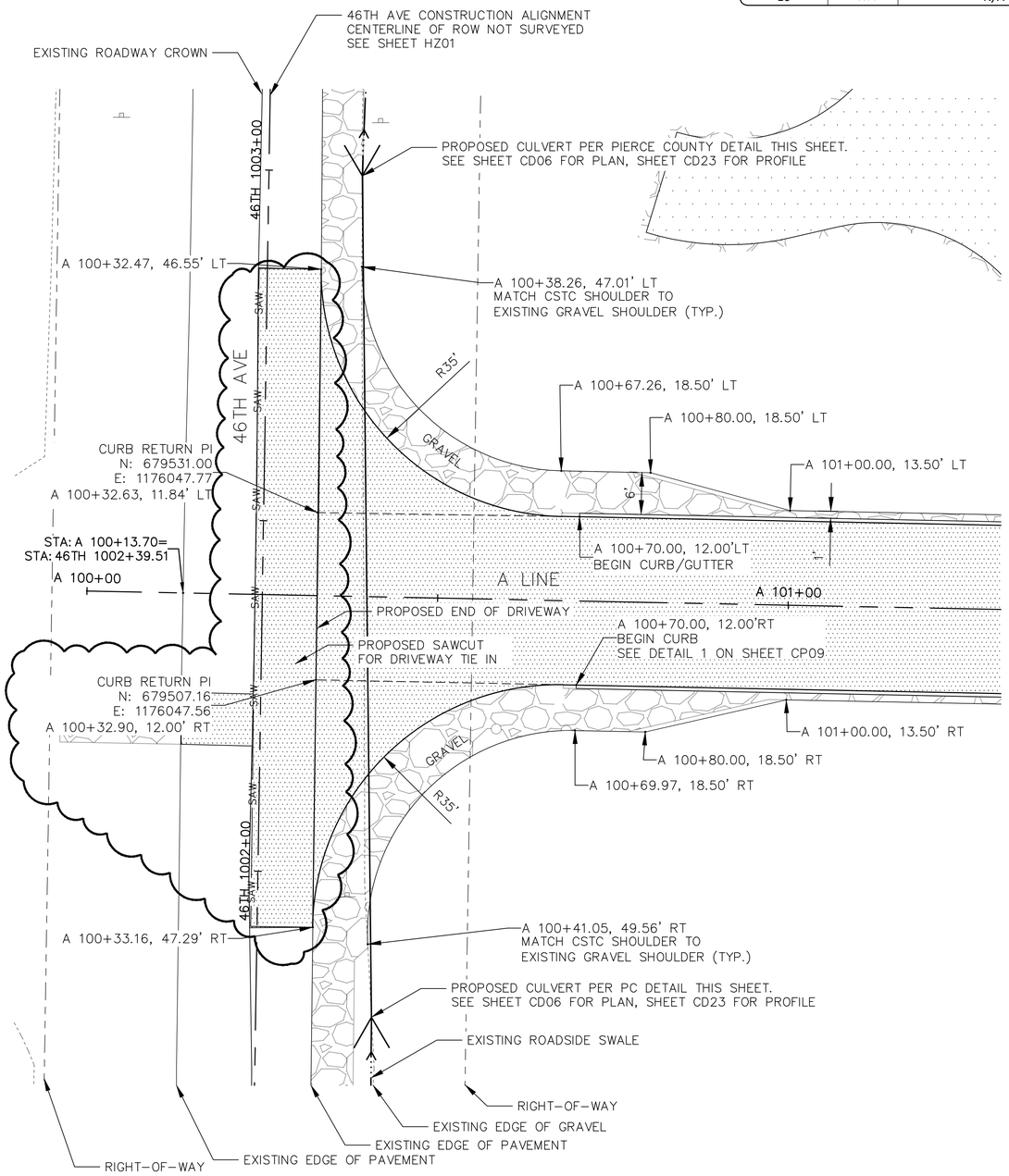

NOTE:
PLAN VIEW OF DRIVEWAY WAS
ADAPTED FROM PIERCE COUNTY
STANDARD DRAWING PC.F5.1

NORTH

0' 5' 10' 20'
SCALE

Drawing: C:\BMS\SKILLINGS-PW-01\TRISTAN ROBERTSON\DMS12837\23014_PS_ENTRY.DWG Layout Tab: ENTRY DRIVE ENLARGED VIEW
Xrefs: 23014_BP_RD.DWG / 23014_BP_EX_TOPO.DWG / X-BASE.DWG / PC PARKS TITLEBLOCK.DWG / 23014_BP_BY OTHERS_PIPELINE2.DWG
Date: 10/09/2026 Time: 10:14:44 AM Plotted by: TRISTANROBERTSON

SKILLINGS
5016 Lacey Boulevard SE, Lacey, Washington 98503
(360) 491-3399 Fax (360) 491-3857

DESIGNED BY: S. MOLAMPHY	SURVEYED BY: R. EDWARDS
DRAWN BY: S. MOLAMPHY	DATE SURVEYED: October 9, 2026
CHECKED BY: T. SKILLINGS	DATE PLOTTED: Oct 9, 2026

THOMAS E. SKILLINGS — STATE OF WASHINGTON — 17952 — REGISTERED PROFESSIONAL ENGINEER
10/09/2026

NO.	DATE	REVISION	BY	APPROVED
1	10/09/26	ADDENDUM 1		

Pierce County
Parks and Recreation Services
Lakewood Community Center
9112 Lakewood Drive SW
Lakewood, WA 98499
253.798.4081

BID SET

CP10

ORANGEGATE PARK
PHASE 1 IMPROVEMENTS

ENTRY DRIVE ENLARGED VIEW

P-111031

REGION NO.	STATE	FEDERAL AID PROJECT NO.	SHEET NO.	TOTAL SHEETS
10	WA	*N/A*		

Know what's **below.** **Call** before you dig.

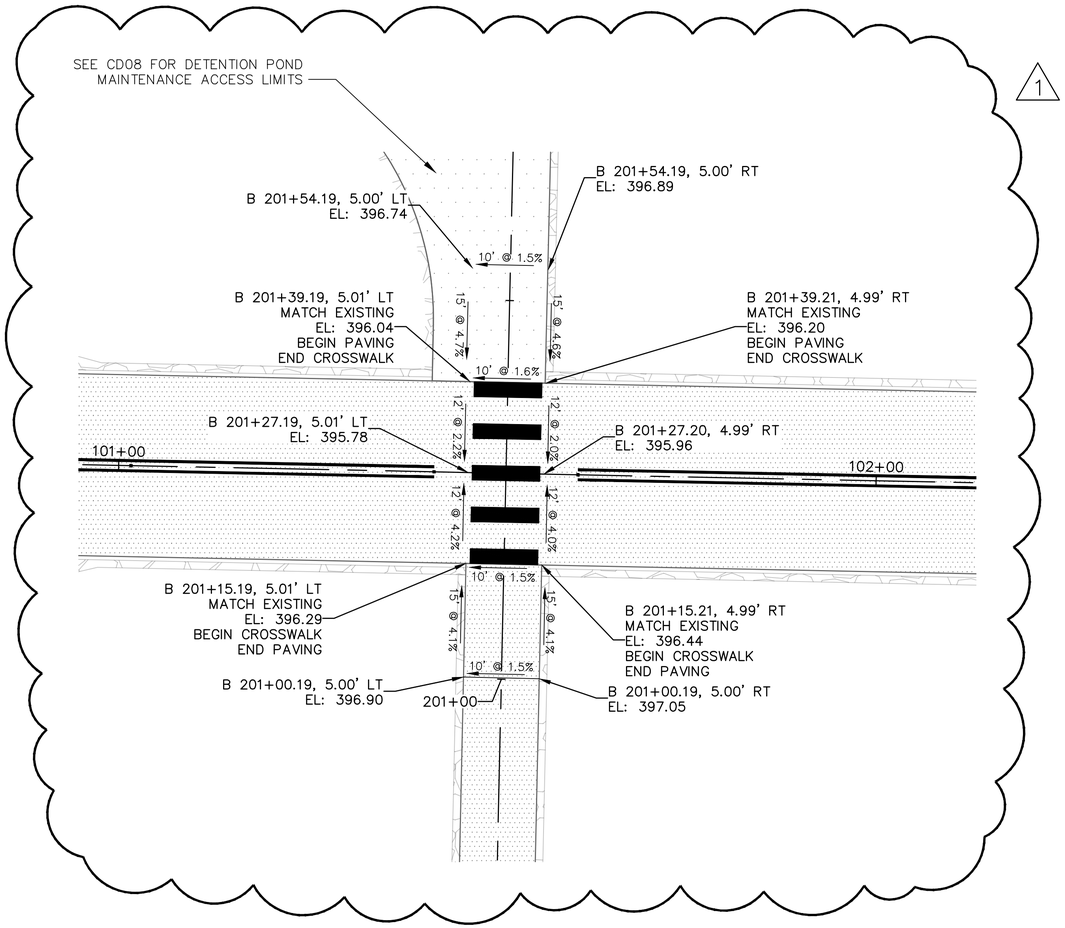

ENTRY DRIVE CROSSING (1)
SCHEDULE A – GRANT REIMBURSABLE

NORTH

0' 5' 10' 20'
SCALE

Drawing: C:\BMS\SKILLINGS-PW-01\TRISTAN ROBERTSON\DMS12837\23014_PS_PED.DWG Layout Tab: PEDESTRIAN CROSSING ENLARGED VIEW
Xrefs: 23014_BP_EX_TOPO.DWG / 23014_BP_BY OTHERS_PIPELINE2.DWG / X-BASE.DWG / 23014_BP_SN.DWG / PC PARKS TITLEBLOCK.DWG
Date: 10/09/2026 Time: 10:16:37 AM Plotted by: TRISTANROBERTSON

SKILLINGS

DESIGNED BY:	SURVEYED BY:
S. MOLAMPHY	R. EDWARDS
DRAWN BY:	DATE SURVEYED:
S. MOLAMPHY	October 9, 2026
CHECKED BY:	DATE PLOTTED:
T. SKILLINGS	Oct 9, 2026

THOMAS E. SKILLINGS — STATE OF WASHINGTON — 17952 — REGISTERED PROFESSIONAL ENGINEER
10/09/2026

NO.	DATE	REVISION	BY	APPROVED
1	10/09/26	ADDENDUM 1		

Pierce County
Parks and Recreation Services
Lakewood Community Center
9112 Lakewood Drive SW
Lakewood, WA 98499
253.798.4081

BID SET

CP12

ORANGEGATE PARK
PHASE 1 IMPROVEMENTS

PEDESTRIAN CROSSING ENLARGED VIEW

P-111031

REGION NO.	STATE	FEDERAL AID PROJECT NO.	SHEET NO.	TOTAL SHEETS
10	WA	*N/A*		

811 Know what's below. Call before you dig.

NORTH

SCALE 0' 5' 10' 20'

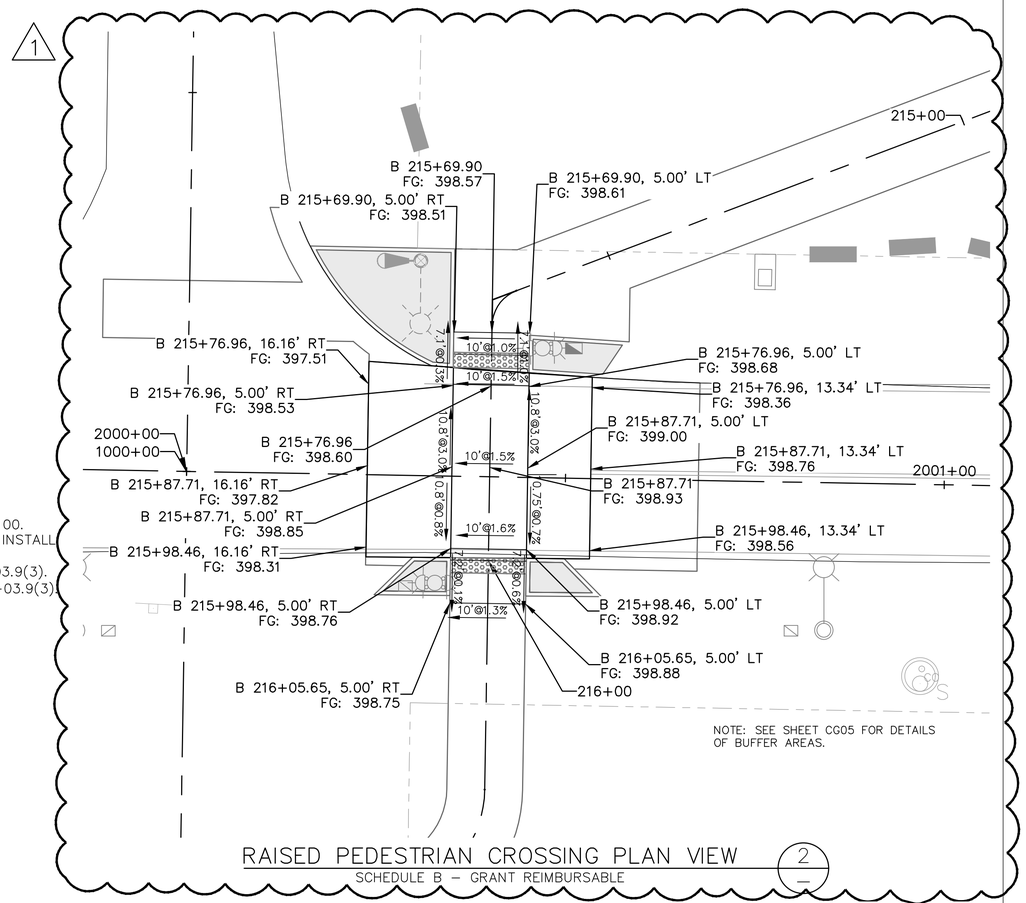

RAISED PEDESTRIAN CROSSING PLAN VIEW 2
SCHEDULE B – GRANT REIMBURSABLE

KEY NOTES:

1. 9 IN. PORTLAND CEMENT CONCRETE PER SPECIFICATION 03 30 00. INCLUDE 1.25 IN. X 18 IN. STEEL DOWELS SPACED 12 IN. O.C., INSTALL PER DIVISION 3 SPECIFICATIONS.
2. 0.17' CRUSHED SURFACING TOP COURSE PER WSDOT SPEC 9–03.9(3).
3. 0.83' CRUSHED SURFACING BASE COURSE PER WSDOT SPEC 9–03.9(3).

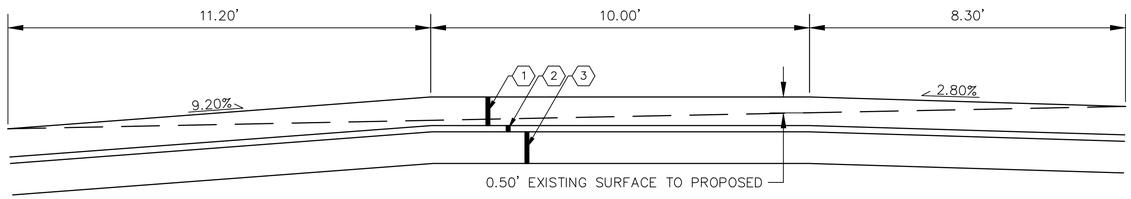

RAISED PEDESTRIAN CROSSING SECTION
B 215+75.00 TO 216+00.00

RAISED PEDESTRIAN CROSSING SECTION 1
SCHEDULE B – NON–GRANT REIMBURSABLE

Drawing: C:\BMS\SKILLINGS-PW-01\TRISTAN ROBERTSON\DMS12837\23014_PS_RAISED_XING.DWG Layout Tab: RAISED PED CROSSING
Xrefs: X-BASE.DWG / 23014_BP_SN.DWG / PC PARKS TITLEBLOCK.DWG / 23014_BP_RD_ADA.DWG / 23014_BP_EX_COMPOSITE-TOPO.DWG / X-OP-TWE.DWG
Date: 10/09/2026 Time: 10:18:15 AM Plotted by: TRISTANROBERTSON

SKILLINGS

DESIGNED BY:	SURVEYED BY:
S. MOLAMPHY	R. EDWARDS
DRAWN BY:	DATE SURVEYED:
S. MOLAMPHY	October 9, 2026
CHECKED BY:	DATE PLOTTED:
T. SKILLINGS	Oct 9, 2026

THOMAS E. SKILLINGS — STATE OF WASHINGTON — 17952 — REGISTERED PROFESSIONAL ENGINEER
10/09/2026

NO.	DATE	REVISION	BY	APPROVED
1	10/09/26	ADDENDUM 1		

Pierce County
Parks and Recreation Services
Lakewood Community Center
9112 Lakewood Drive SW
Lakewood, WA 98499
253.798.4081

BID SET

CP13

ORANGEGATE PARK
PHASE 1 IMPROVEMENTS

RAISED PEDESTRIAN CROSSING ENLARGED VIEW

P-111031

REGION NO.	STATE	FEDERAL AID PROJECT NO.	SHEET NO.	TOTAL SHEETS
10	WA	N/A		

SIGNS INSIDE OF RIGHT-OF-WAY

SIGN NO.	SHEET NO.	SIGN CODE	1 SIGN DESCRIPTION	STATION NEW	STATION EXISTING	SIGN SIZE X	SIGN SIZE Y	SIGN AREA (SQ FT)	LETTER SIZE OR CODE	POST MATERIAL *	POST SIZE	# OF POSTS	CLEARANCE V	CLEARANCE W	REMARKS
P1	SN03	R7-2A MOD.	NO PARKING STOPPING STANDING 10 PM TO 5 PM		46TH 1008+50.62	–	–	–	–	WOOD	16"SQ	–	7'	16.92' RT	SEE NOTE 2, 5, AND 11.
P2	SN03	R7-2A MOD.	NO PARKING STOPPING STANDING 10 PM TO 5 PM		46TH 1008+51.70	–	–	–	–	WOOD	16'SQ	–	7'	18.94' LT	SEE NOTE 2, 5, AND 11.
P3	SN04	R7-2A MOD.	NO PARKING STOPPING STANDING 10 PM TO 5 PM		46TH 1003+07.32	–	–	–	–	--	--	–	–	15.79' RT	SEE NOTE 1 AND NOTE 5.
R5	SN04	R2-1	SPEED LIMIT 25	46TH 1001+57.00		–	–	–	–	–	–	–	–	12.50' RT	SEE NOTE 1. REMOVE AND RELOCATE EXISTING SIGN.
P6	SN04		CUSTOM SIGN		46TH 1001+52.59	–	–	–	–	--	--	–	7'	26.91' RT	SEE NOTE 1, NOTE 3, AND NOTE 5. PARK'S SIGN.
P7	SN04		WELCOME TO PARK SIGN		46TH 1001+44.56	–	–	–	–	--	--	–	–	24.56' RT	SEE NOTE 1, NOTE 3, AND NOTE 5. PARK'S SIGN
P8	SN04	R7-2A MOD.	NO PARKING STOPPING STANDING 10 PM TO 5 AM		46TH 1001+04.44	–	–	–	–	--	--	–	–	12.35' RT	SEE NOTE 1 AND NOTE 5.
P9	SN04	R7-3 MOD.	NO DUMPING PCC 12.40		46TH 1001+04.44	–	–	–	–	--	--	–	7'	12.35' RT	SEE NOTE 1 AND NOTE 5.
41	SN05	W11-2 L	PEDESTRIAN	B 215+74.00		36"	36"	9	STANDARD			1	8.5'	7.66' RT	SEE NOTE 2, NOTE 4, AND NOTE 10.
42	SN05	W16-7P L	DIAGONAL DOWNWARD ARROW (PLAQUE)	B 215+74.00		21"	15"	2.19	STANDARD			1	7'	7.66' RT	SEE NOTE 2, NOTE 4, AND NOTE 10.
43	SN05	W11-2 R	PEDESTRIAN	B 215+74.00		36"	36"	9	STANDARD			1	8.5'	7.66' RT	SEE NOTE 2, NOTE 4, AND NOTE 10.
44	SN05	W16-7P R	DIAGONAL DOWNWARD ARROW (PLAQUE)	B 215+74.00		21"	15"	2.19	STANDARD			1	7'	7.66' RT	SEE NOTE 2, NOTE 4, AND NOTE 10.
45	SN05	W11-2 L	PEDESTRIAN	B 216+06.20		36"	36"	9	STANDARD			1	8.5'	7.5' LT	SEE NOTE 2, NOTE 4, AND NOTE 10.
46	SN05	W16-7P L	DIAGONAL DOWNWARD ARROW (PLAQUE)	B 216+06.20		21"	15"	2.19	STANDARD			1	7'	7.5' LT	SEE NOTE 2, NOTE 4, AND NOTE 10.
47	SN05	W11-2 R	PEDESTRIAN	B 216+06.20		36"	36"	9	STANDARD			1	8.5'	7.5' LT	SEE NOTE 2, NOTE 4, AND NOTE 10.
48	SN05	W16-7P R	DIAGONAL DOWNWARD ARROW (PLAQUE)	B 216+06.20		21"	15"	2.19	STANDARD			1	7'	7.5' LT	SEE NOTE 2, NOTE 4, AND NOTE 10.
P49	SN05	R7-2A MOD.	NO PARKING STOPPING STANDING 10 PM TO 5 AM		84TH 2001+59.57	–	–	–	–	--	--	–	–	19.33' LT	SEE NOTE 1 AND NOTE 5.
P50	SN05	R7-3 MOD.	NO DUMPING PCC 12.40		84TH 2001+59.57	–	–	–	–	--	--	–	–	19.33' LT	SEE NOTE 1 AND NOTE 5.
P51	SN05	R7-2A MOD.	NO PARKING STOPPING STANDING 10 PM TO 5 AM		84TH 2001+59.73	–	–	–	–	--	--	–	–	15.17' RT	SEE NOTE 1 AND NOTE 5.
P52	SN05	R7-3 MOD.	NO DUMPING PCC 12.40		84TH 2001+59.73	–	–	–	–	--	--	–	–	19.33' LT	SEE NOTE 1 AND NOTE 5.
53	SN05	PW-58	RAISED CROSSWALK AHEAD	84TH 2003+44.50		36"	36"	9	STANDARD	WOOD	16"SQ	1	8.5'	20.85' RT	SEE NOTE 2 AND NOTE 10. INSTALL ABOVE SIGN NO. 54.
54	SN05	W13-1P	15 MPH ADVISORY SPEED	84TH 2003+44.50		24"	24"	4	STANDARD	WOOD	16"SQ	1	6'	20.85' RT	SEE NOTE 2 AND NOTE 10. INSTALL UNDER SIGN NO. 53.
55	SN05	PW-58	RAISED CROSSWALK AHEAD	B 1997+36.50		36"	36"	9	STANDARD	WOOD	16"SQ	1	8.5'	NOTE 11	SEE NOTE 2 AND NOTE 10. INSTALL ABOVE SIGN NO. 56.
56	SN05	W13-1P	15 MPH ADVISORY SPEED	B 1997+36.50		24"	24"	4	STANDARD	WOOD	16"SQ	1	6'	NOTE 9	SEE NOTE 2 AND NOTE 10. INSTALL UNDER SIGN NO. 55.
57	SN05	W2-1	INTERSECTION CROSSING	B 222+89.00		18"	18"	2.25	STANDARD	WOOD	16"SQ	1	7'	10' RT	SEE NOTE 2. INSTALL ABOVE SIGN NO. 58. PARK'S SIGN.
58	SN05	R15-8	LOOK BOTH WAYS	B 222+89.00		18"	9"	1.13	STANDARD	WOOD	16"SQ	1	6.25'	10' RT	SEE NOTE 2. INSTALL UNDER SIGN NO. 57. PARK'S SIGN.
59	SN05	W11-2	PEDESTRIAN CROSSING	B 222+86.50		18"	18"	2.25	STANDARD	WOOD	16"SQ	1	7'	55' LT	SEE NOTE 2. INSTALL ABOVE SIGN NO. 60. PARK'S SIGN.
60	SN05	R15-8	LOOK BOTH WAYS	B 222+86.50		18"	9"	1.13	STANDARD	WOOD	16"SQ	1	6.25'	55' LT	SEE NOTE 2. INSTALL UNDER SIGN NO. 59. PARK'S SIGN.

Know what's below. Call before you dig.

1

NOTES:
1. SCHEDULE A – GRANT REIMBURSABLE.
2. SCHEDULE B – NON-GRANT REIMBURSABLE.
3. CUSTOM SIGNS WILL REQUIRE COOPERATION FROM PIERCE COUNTY FOR PURCHASE AND FABRICATION.
4. INSTALL BI-DIRECTIONAL SIGNS PER RRFB DETAIL ON SHEET E07.
5. PROTECTED SIGNS ARE IDENTIFIED WITH A SIGN NUMBER PREFIX "P." I.E. P7.
6. REMOVED SIGNS ARE IDENTIFIED WITH A SIGN NUMBER PREFIX "R" I.E. R-1.
7. GROUND CLEARANCE AND HEIGHT ABOVE GROUND IS THE SAME FOR ALL SIGNS.
8. ALL SIGNS HAVE 1 DISPLAY SIDE.
9. SIGN SHALL BE PROVIDED 300 FT WEST OF THE EDGE OF CROSSWALK. THE SIGN SHALL BE OFFSET 8 FT OFF THE SOUTHERN EDGE OF PAVEMENT.
10. SIGN SHALL HAVE A BLACK LEGEND AND BORDER ON A FLUORESCENT YELLOW-GREEN BACKGROUND.
11. SIGN TO BE REMOVED AND STORED TO ACCOMMODATE DRAINAGE INSTALLATION. SIGN TO BE REPLACED IN EXISTING LOCATION AS SOON AS PRACTICAL AFTER DRAINAGE INSTALLATION.

1

PIERCE COUNTY GENERAL STRIPING AND SIGNING NOTES

1. CONTRACTOR SUPPLY AND INSTALL ALL PUBLIC SIGNAGE AND STRIPING IN THE BASE BID.
2. THE CONTRACTOR SHALL COORDINATE WITH PIERCE COUNTY TRAFFIC TO VERIFY WHETHER PIERCE COUNTY TRAFFIC WILL PERFORM THE WORK AS DESCRIBED IN THE NOTES ON THIS SHEET AND WHETHER THE CONTRACTOR SHALL REIMBURSE PIERCE COUNTY AS DESCRIBED. IF PIERCE COUNTY TRAFFIC OPTS TO NOT PERFORM THE WORK DESCRIBED IN THE NOTES ON THIS SHEET, THE CONTRACTOR SHALL PERFORM, SUPPLY, AND INSTALL PUBLIC SIGNAGE AND STRIPING AS PART OF THE BASE BID WORK. SEE SECTION 10-14-53 FOR FURTHER INFORMATION.
3. PIERCE COUNTY TRAFFIC OPERATIONS WILL PERFORM ALL PAVEMENT MARKINGS AND SIGNING ON A REIMBURSABLE BASIS FOR ALL PUBLIC ROAD IMPROVEMENT AND NEW PUBLIC ROAD CONSTRUCTION. THE CONTRACTOR SHALL CONTACT THEIR DEVELOPMENT ENGINEERING INSPECTOR WHEN THE ROADWAY IS READY FOR STRIPING AND / OR SIGNING BY PIERCE COUNTY. AT THIS TIME, THE CONTRACTOR SHALL CONFIRM THAT THEIR DEVELOPMENT ENGINEERING INSPECTOR HAS THE NEEDED CONTACT AND BILLING INFORMATION. THE DEVELOPMENT ENGINEERING INSPECTOR WILL THEN CONFIRM THE ROADWAY HAS BEEN BUILT IN ACCORDANCE WITH THE APPROVED PLANS, TEMPORARY STRIPING TAPE IS IN PLACE, CONFLICTING STRIPING HAS BEEN OBLITERATED, AND THE ROAD IS READY FOR STRIPING. THE DEVELOPMENT ENGINEERING INSPECTOR WILL THEN NOTIFY PIERCE COUNTY TRAFFIC ENGINEERING WITH THE PROJECT NAME, APPLICATION NUMBER, PROJECT LOCATION, CONTRACTOR'S BILLING INFORMATION, AND CONTACT NAME AND PHONE NUMBER. OCCASIONALLY, TRAFFIC OPERATIONS MAY DECIDE NOT TO PERFORM THE WORK BASED ON UNIQUE CIRCUMSTANCES. ON THESE OCCASIONS, THE CONTRACTOR WILL BE RESPONSIBLE FOR ALL WORK SHOWN ON THE APPROVED CHANNELIZATION PLANS AND ASSOCIATED SIGNING THAT MAY OR MAY NOT BE SHOWN IN THE PLANS, AS MAY BE DIRECTED BY THE COUNTY ENGINEER.
4. THE CONTRACTOR SHALL BE RESPONSIBLE FOR FURNISHING, PLACING, AND MAINTAINING TEMPORARY STRIPING TAPE AFTER PAVING AND PRIOR TO FIRST PAINT STRIPING BY PIERCE COUNTY'S TRAFFIC OPERATIONS. THE TEMPORARY STRIPING TAPE SHALL MATCH THE INTENT OF THE CHANNELIZATION PLAN AND MEET STANDARD SPECIFICATION AND SPECIAL PROVISION 8-23. ALL TEMPORARY STRIPING TAPE ON THE FINAL PAVEMENT LIFT SHALL BE REMOVABLE TEMPORARY TAPE.
5. THE CONTRACTOR SHALL ALSO BE RESPONSIBLE TO OBLITERATE ALL EXISTING AND CONFLICTING STRIPING PRIOR TO INSTALLING THE TEMPORARY STRIPING TAPE.
6. THE CONTRACTOR SHALL PROVIDE STATIONING ALONG THE CONSTRUCTION CENTERLINE AT 50-FOOT INTERVALS ON TANGENTS, 25-FOOT INTERVALS ON CURVES, AND ALL PC STATIONS, PT STATIONS, AND ANGLE POINT STATIONS. LAYOUT ALSO INCLUDES STRING LINE MARKS NO FARTHER APART THEN EVERY 5-10 FEET. STATIONING MARKS SHALL BE LAID OUT USING SILVER COLOR LAYOUT PAINT, WITH MARKS KEPT TO A MINIMUM OF SIZE.
7. AFTER PIERCE COUNTY'S TRAFFIC OPERATIONS HAS PERFORMED THE FIRST STRIPING PASS, THE CONTRACTOR SHALL REMOVE ALL TEMPORARY STRIPING TAPE WITHIN FIVE WORKING DAYS AND NOTIFY TRAFFIC ENGINEERING, SARAH GRICE, COUNTY TRAFFIC ENGINEER, 253-798-8004, THAT THE PROJECT IS READY FOR THE FINAL STRIPING, RAISED PAVEMENT MARKERS, PAVEMENT LEGENDS, AND ANY REMAINING SIGNAGE.
8. WHEN NOTED ON THE PLANS, THE CONTRACTOR MAY BE REQUIRED TO INSTALL A REGULATORY OR WARNING SIGN, UNTIL SUCH TIME THAT TRAFFIC OPERATIONS CAN INSTALL THE PERMANENT AND / OR REMAINING SIGNING. ALL SIGNS SHALL BE INSTALLED ON WOOD POSTS, UNLESS OTHERWISE INDICATED IN THE PLANS.
9. THE CONTRACTOR SHALL BE RESPONSIBLE TO PROVIDE ALL TEMPORARY TRAFFIC CONTROL IN ACCORDANCE WITH THE CURRENT MANUAL ON UNIFORM TRAFFIC CONTROL DEVICES (MUTCD) AND PIERCE COUNTY STANDARD DRAWINGS.
10. THE CONTRACTOR WILL BE RESPONSIBLE FOR MAINTAINING ANY EXISTING TRAFFIC CONTROL SIGNS WITHIN THE PROJECT LIMITS DURING THE COURSE OF THEIR WORK.
11. ONCE THE PROJECT HAS BEEN STRIPED AND / OR SIGNED, THERE MAY BE A NEED TO RELOCATE LANDSCAPING (TYPICALLY STREET TREES) TO PROVIDE NECESSARY SIGHT DISTANCE. AS DIRECTED BY PIERCE COUNTY'S DEVELOPMENT ENGINEERING INSPECTOR, ANY BLOCKING LANDSCAPE SHALL BE RELOCATED BY THE CONTRACTOR AS QUICKLY AS POSSIBLE.

SKILLINGS

DESIGNED BY: S. MOLAMPHY	SURVEYED BY: R. EDWARDS
DRAWN BY: S. MOLAMPHY	DATE SURVEYED: October 9, 2026
CHECKED BY: T. SKILLINGS	DATE PLOTTED: Oct 9, 2026

THOMAS E. SKILLINGS STATE OF WASHINGTON 17952 REGISTERED PROFESSIONAL ENGINEER 10/09/2026

NO.	DATE	REVISION	BY	APPROVED
1	10/09/26	ADDENDUM 1		

Pierce County
Parks and Recreation Services
Lakewood Community Center
9112 Lakewood Drive SW
Lakewood, WA 98499
253.798.4081

BID SET

SN01

ORANGEGATE PARK
PHASE 1 IMPROVEMENTS

TRAFFIC SIGN SCHEDULE

P-111031

Drawing: C:\BMS\SKILLINGS-PW-01\TRISTAN ROBERTSON\DMS12837\23014_NT_SN.DWG Layout Tab: 23014_NT_SN
Xrefs: PC PARKS TITLEBLOCK.DWG
Date: 10/09/2026 Time: 10:19:55 AM Plotted by: TRISTANROBERTSON

REGION NO.	STATE	FEDERAL AID PROJECT NO.	SHEET NO.	TOTAL SHEETS
10	WA	N/A		

Know what's below. Call before you dig.

SIGNS OUTSIDE OF RIGHT-OF-WAY

SIGN NO.	SHEET NO.	SIGN CODE	SIGN DESCRIPTION	STATION NEW	STATION EXISTING	SIGN SIZE X	SIGN SIZE Y	SIGN AREA (SQ FT)	LETTER SIZE OR CODE	POST MATERIAL *	POST SIZE	# OF POSTS	CLEARANCE V	CLEARANCE W	REMARKS
4	SN04	R1-1	STOP	A 100+62.70		30"	30"	6.25	STANDARD	WOOD	16"SQ	1	7'	23.50' LT	SEE NOTE 1.
10	SN04	W11-2	PEDESTRIAN	A 101+36.10		36"	36"	9	STANDARD	WOOD	16"SQ	1	7.25'	22' RT	SEE NOTE 1 & 10. INSTALL ABOVE SIGN NO. 11.
11	SN04	W13-1P	15 MPH SPEED	A 101+36.10		24"	12"	2	STANDARD	WOOD	16"SQ	1	6'	22' RT	SEE NOTE 1 & 10. INSTALL UNDER SIGN NO. 10.
12	SN04	W11-2	PEDESTRIAN	A 101+68.15		36"	36"	9	STANDARD	WOOD	16"SQ	1	7.25'	22' LT	SEE NOTE 1 & 10. INSTALL ABOVE SIGN NO. 13.
13	SN04	W13-1P	15 MPH SPEED	A 101+68.15		24"	12"	2	STANDARD	WOOD	16"SQ	1	6'	22' LT	SEE NOTE 1 & 10. INSTALL UNDER SIGN NO. 12.
14	SN04	R8-3C MOD.	NO PARKING FIRE LANE	A 102+27.86		24"	36"	6	STANDARD	WOOD	16"SQ	1	8'	18' LT	SEE NOTE 1.
15	SN04	R8-3C MOD.	NO PARKING FIRE LANE	A 102+40.00		24"	36"	6	STANDARD	WOOD	16"SQ	1	8'	18' RT	SEE NOTE 1.
16	SN04	R8-3C MOD.	NO PARKING FIRE LANE	A 111+53.00		24"	36"	6	STANDARD	WOOD	16"SQ	1	8'	14.95' RT	SEE NOTE 1.
17	SN04	R8-3C MOD.	NO PARKING FIRE LANE	A 111+26.83		24"	36"	6	STANDARD	WOOD	16"SQ	1	8'	17' RT	SEE NOTE 1.
18	SN04	R8-3C MOD.	NO PARKING FIRE LANE	A 111+05.10		24"	36"	6	STANDARD	WOOD	16"SQ	1	8'	17' RT	SEE NOTE 1.
19	SN04	R8-3C MOD.	NO PARKING FIRE LANE	A 111+51.50		24"	36"	6	STANDARD	WOOD	16"SQ	1	8'	21.80' LT	SEE NOTE 1.
20	SN04	R5-1A	WRONG WAY	A 111+24.00		36"	24"	6	STANDARD	WOOD	16"SQ	1	7'	21' LT	SEE NOTE 1.
21	SN04	R8-3C MOD.	NO PARKING FIRE LANE	A 111+05.12		24"	36"	6	STANDARD	WOOD	16"SQ	1	8'	17' LT	SEE NOTE 1.
22	SN04	R8-3C MOD.	NO PARKING FIRE LANE	A 102+98.83		24"	36"	6	STANDARD	WOOD	16"SQ	1	8'	17.92' RT	SEE NOTE 1.
23	SN04	R8-3C MOD.	NO PARKING FIRE LANE	A 103+37.00		24"	36"	6	STANDARD	WOOD	16"SQ	1	8'	17' LT	SEE NOTE 1.
24	SN04	R6-1	ONE WAY	A 103+17.00		36"	12"	3	STANDARD	WOOD	16"SQ	1	7'	19' RT	SEE NOTE 1.
25	SN04	R8-3C MOD.	NO PARKING FIRE LANE	A 103+37.00		24"	36"	6	STANDARD	WOOD	16"SQ	1	8'	17' RT	SEE NOTE 1.
26	SN04	R7-8	RESERVED PARKING	A 108+34.80		12"	18"	1.5	STANDARD	WOOD	16"SQ	1	6.5'	32' RT	SEE NOTE 1. INSTALL ABOVE SIGN NO. 27.
27	SN04	R7-8AP	VAN ACCESSIBLE (PLAQUE)	A 108+34.80		12"	6"	0.5	STANDARD	WOOD	16"SQ	1	6'	32' RT	SEE NOTE 1. INSTALL UNDER SIGN NO. 26.
28	SN04	R7-8	RESERVED PARKING	A 108+14.50		12"	18"	1.5	STANDARD	WOOD	16"SQ	1	6.5'	32' RT	SEE NOTE 1. INSTALL ABOVE SIGN NO. 29.
29	SN04	R7-8AP	VAN ACCESSIBLE (PLAQUE)	A 108+14.50		12"	6"	0.5	STANDARD	WOOD	16"SQ	1	6'	32' RT	SEE NOTE 1. INSTALL UNDER SIGN NO. 28.
30	SN04	R8-3C MOD.	NO PARKING FIRE LANE	A 107+80.35		24"	36"	6	STANDARD	WOOD	16"SQ	1	8'	17' RT	SEE NOTE 1.
31	SN04	R8-3C MOD.	NO PARKING FIRE LANE	A 107+80.35		24"	36"	6	STANDARD	WOOD	16"SQ	1	8'	17' RT	SEE NOTE 1.
32	SN04	R8-3C MOD.	NO PARKING FIRE LANE	A 107+50.70		24"	36"	6	STANDARD	WOOD	16"SQ	1	8'	17' LT	SEE NOTE 1.
33	SN04	R7-8	RESERVED PARKING	A 106+20.55		12"	18"	1.5	STANDARD	WOOD	16"SQ	1	6.5'	32' RT	SEE NOTE 1. INSTALL ABOVE SIGN NO. 34.
34	SN04	R7-8AP	VAN ACCESSIBLE (PLAQUE)	A 106+20.55		12"	6"	0.5	STANDARD	WOOD	16"SQ	1	6'	32' RT	SEE NOTE 1. INSTALL UNDER SIGN NO. 33.
35	SN04	R8-3C MOD.	NO PARKING FIRE LANE	A 106+61.75		24"	36"	6	STANDARD	WOOD	16"SQ	1	8'	17' RT	SEE NOTE 1.
36	SN04	R8-3C MOD.	NO PARKING FIRE LANE	A 107+21.05		24"	36"	6	STANDARD	WOOD	16"SQ	1	8'	17' LT	SEE NOTE 1.
37	SN04	R7-8	RESERVED PARKING	A 106+40.80		12"	18"	1.5	STANDARD	WOOD	16"SQ	1	6.5'	32' RT	SEE NOTE 1. INSTALL ABOVE SIGN NO. 38.
38	SN04	R7-8AP	VAN ACCESSIBLE (PLAQUE)	A 106+40.80		12"	6"	0.5	STANDARD	WOOD	16"SQ	1	6'	32' RT	SEE NOTE 1. INSTALL UNDER SIGN NO. 37.
39	SN04	R8-3C MOD.	NO PARKING FIRE LANE	A 107+21.05		24"	36"	6	STANDARD	WOOD	16"SQ	1	8'	18.15' RT	SEE NOTE 1.
40	SN04	R8-3C MOD.	NO PARKING FIRE LANE	A 106+40.82		24"	36"	6	STANDARD	WOOD	16"SQ	1	8'	17' RT	SEE NOTE 1.
61	SN05	W11-2	PEDESTRIAN CROSSING	B 223+75.00		18"	18"	2.25	STANDARD	WOOD	16"SQ	1	7'	55' RT	SEE NOTE 2 & 10. INSTALL ABOVE SIGN NO. 62.
62	SN05	R15-8	LOOK BOTH WAYS	B 223+75.00		18"	9"	1.13	STANDARD	WOOD	16"SQ	1	6'	55' RT	SEE NOTE 2 & 10. INSTALL UNDER SIGN NO. 61.
63	SN05	W2-1	INTERSECTION CROSSING	B 223+46.40		18"	18"	2.25	STANDARD	WOOD	16"SQ	1	6.75'	10' RT	SEE NOTE 2 & 10. INSTALL ABOVE SIGN NO. 64.
64	SN05	R15-8	LOOK BOTH WAYS	B 223+46.40		18"	9"	1.13	STANDARD	WOOD	16"SQ	1	6'	10' RT	SEE NOTE 2 & 10. INSTALL UNDER SIGN NO. 63.

1

NOTES:
1. SCHEDULE A – GRANT REIMBURSABLE.
2. SCHEDULE B – NON-GRANT REIMBURSABLE.
3. CUSTOM SIGNS WILL REQUIRE COOPERATION FROM PIERCE COUNTY FOR PURCHASE AND FABRICATION.
4. INSTALL BI-DIRECTIONAL SIGNS PER RRFB DETAIL ON SHEET E07.
5. PROTECTED SIGNS ARE IDENTIFIED WITH A SIGN NUMBER PREFIX "P." I.E. P7.
6. REMOVED SIGNS ARE IDENTIFIED WITH A SIGN NUMBER PREFIX "R" I.E. R-1.
7. GROUND CLEARANCE AND HEIGHT ABOVE GROUND IS THE SAME FOR ALL SIGNS.
8. ALL SIGNS HAVE 1 DISPLAY SIDE.
9. SIGN SHALL BE PROVIDED 300 FT WEST OF THE EDGE OF CROSSWALK. THE SIGN SHALL BE OFFSET 8 FT OFF THE SOUTHERN EDGE OF PAVEMENT.
10. SIGN SHALL HAVE A BLACK LEGEND AND BORDER ON A FLUORESCENT YELLOW-GREEN BACKGROUND.
11. SIGN TO BE REMOVED AND STORED TO ACCOMMODATE DRAINAGE INSTALLATION. SIGN TO BE REPLACED IN EXISTING LOCATION AS SOON AS PRACTICAL AFTER DRAINAGE INSTALLATION.

1

PIERCE COUNTY GENERAL STRIPING AND SIGNING NOTES

1. CONTRACTOR SUPPLY AND INSTALL ALL PUBLIC SIGNAGE AND STRIPING IN THE BASE BID.
2. THE CONTRACTOR SHALL COORDINATE WITH PIERCE COUNTY TRAFFIC TO VERIFY WHETHER PIERCE COUNTY TRAFFIC WILL PERFORM THE WORK AS DESCRIBED IN THE NOTES ON THIS SHEET AND WHETHER THE CONTRACTOR SHALL REIMBURSE PIERCE COUNTY AS DESCRIBED. IF PIERCE COUNTY TRAFFIC OPTS TO NOT PERFORM THE WORK DESCRIBED IN THE NOTES ON THIS SHEET, THE CONTRACTOR SHALL PERFORM, SUPPLY, AND INSTALL PUBLIC SIGNAGE AND STRIPING AS PART OF THE BASE BID WORK. SEE SECTION 10-14-53 FOR FURTHER INFORMATION.
3. PIERCE COUNTY TRAFFIC OPERATIONS WILL PERFORM ALL PAVEMENT MARKINGS AND SIGNING ON A REIMBURSABLE BASIS FOR ALL PUBLIC ROAD IMPROVEMENT AND NEW PUBLIC ROAD CONSTRUCTION. THE CONTRACTOR SHALL CONTACT THEIR DEVELOPMENT ENGINEERING INSPECTOR WHEN THE ROADWAY IS READY FOR STRIPING AND / OR SIGNING BY PIERCE COUNTY. AT THIS TIME, THE CONTRACTOR SHALL CONFIRM THAT THEIR DEVELOPMENT ENGINEERING INSPECTOR HAS THE NEEDED CONTACT AND BILLING INFORMATION. THE DEVELOPMENT ENGINEERING INSPECTOR WILL THEN CONFIRM THE ROADWAY HAS BEEN BUILT IN ACCORDANCE WITH THE APPROVED PLANS, TEMPORARY STRIPING TAPE IS IN PLACE, CONFLICTING STRIPING HAS BEEN OBLITERATED, AND THE ROAD IS READY FOR STRIPING. THE DEVELOPMENT ENGINEERING INSPECTOR WILL THEN NOTIFY PIERCE COUNTY TRAFFIC ENGINEERING WITH THE PROJECT NAME, APPLICATION NUMBER, PROJECT LOCATION, CONTRACTOR'S BILLING INFORMATION, AND CONTACT NAME AND PHONE NUMBER. OCCASIONALLY, TRAFFIC OPERATIONS MAY DECIDE NOT TO PERFORM THE WORK BASED ON UNIQUE CIRCUMSTANCES. ON THESE OCCASIONS, THE CONTRACTOR WILL BE RESPONSIBLE FOR ALL WORK SHOWN ON THE APPROVED CHANNELIZATION PLANS AND ASSOCIATED SIGNING THAT MAY OR MAY NOT BE SHOWN IN THE PLANS, AS MAY BE DIRECTED BY THE COUNTY ENGINEER.
4. THE CONTRACTOR SHALL BE RESPONSIBLE FOR FURNISHING, PLACING, AND MAINTAINING TEMPORARY STRIPING TAPE AFTER PAVING AND PRIOR TO FIRST PAINT STRIPING BY PIERCE COUNTY'S TRAFFIC OPERATIONS. THE TEMPORARY STRIPING TAPE SHALL MATCH THE INTENT OF THE CHANNELIZATION PLAN AND MEET STANDARD SPECIFICATION AND SPECIAL PROVISION 8-23. ALL TEMPORARY STRIPING TAPE ON THE FINAL PAVEMENT LIFT SHALL BE REMOVABLE TEMPORARY TAPE.
5. THE CONTRACTOR SHALL ALSO BE RESPONSIBLE TO OBLITERATE ALL EXISTING AND CONFLICTING STRIPING PRIOR TO INSTALLING THE TEMPORARY STRIPING TAPE.
6. THE CONTRACTOR SHALL PROVIDE STATIONING ALONG THE CONSTRUCTION CENTERLINE AT 50-FOOT INTERVALS ON TANGENTS, 25-FOOT INTERVALS ON CURVES, AND ALL PC STATIONS, PT STATIONS, AND ANGLE POINT STATIONS. LAYOUT ALSO INCLUDES STRING LINE MARKS NO FARTHER APART THEN EVERY 5-10 FEET. STATIONING MARKS SHALL BE LAID OUT USING SILVER COLOR LAYOUT PAINT, WITH MARKS KEPT TO A MINIMUM OF SIZE.
7. AFTER PIERCE COUNTY'S TRAFFIC OPERATIONS HAS PERFORMED THE FIRST STRIPING PASS, THE CONTRACTOR SHALL REMOVE ALL TEMPORARY STRIPING TAPE WITHIN FIVE WORKING DAYS AND NOTIFY TRAFFIC ENGINEERING, SARAH GRICE, COUNTY TRAFFIC ENGINEER, 253-798-8004, THAT THE PROJECT IS READY FOR THE FINAL STRIPING, RAISED PAVEMENT MARKERS, PAVEMENT LEGENDS, AND ANY REMAINING SIGNAGE.
8. WHEN NOTED ON THE PLANS, THE CONTRACTOR MAY BE REQUIRED TO INSTALL A REGULATORY OR WARNING SIGN, UNTIL SUCH TIME THAT TRAFFIC OPERATIONS CAN INSTALL THE PERMANENT AND / OR REMAINING SIGNING. ALL SIGNS SHALL BE INSTALLED ON WOOD POSTS, UNLESS OTHERWISE INDICATED IN THE PLANS.
9. THE CONTRACTOR SHALL BE RESPONSIBLE TO PROVIDE ALL TEMPORARY TRAFFIC CONTROL IN ACCORDANCE WITH THE CURRENT MANUAL ON UNIFORM TRAFFIC CONTROL DEVICES (MUTCD) AND PIERCE COUNTY STANDARD DRAWINGS.
10. THE CONTRACTOR WILL BE RESPONSIBLE FOR MAINTAINING ANY EXISTING TRAFFIC CONTROL SIGNS WITHIN THE PROJECT LIMITS DURING THE COURSE OF THEIR WORK.
11. ONCE THE PROJECT HAS BEEN STRIPED AND / OR SIGNED, THERE MAY BE A NEED TO RELOCATE LANDSCAPING (TYPICALLY STREET TREES) TO PROVIDE NECESSARY SIGHT DISTANCE. AS DIRECTED BY PIERCE COUNTY'S DEVELOPMENT ENGINEERING INSPECTOR, ANY BLOCKING LANDSCAPE SHALL BE RELOCATED BY THE CONTRACTOR AS QUICKLY AS POSSIBLE.

Drawing: C:\BMS\SKILLINGS-PW-01\TRISTAN ROBERTSON\DMS12837\23014_NT_SN_02.DWG Layout Tab: 23014_NT_SN
Xrefs: PC PARKS TITLEBLOCK.DWG
Date: 10/09/2026 Time: 10:21:19 AM Plotted by: TRISTANROBERTSON

SKILLINGS

DESIGNED BY: S. MOLAMPHY	SURVEYED BY: R. EDWARDS
DRAWN BY: S. MOLAMPHY	DATE SURVEYED: October 9, 2026
CHECKED BY: T. SKILLINGS	DATE PLOTTED: Oct 9, 2026

THOMAS E. SKILLINGS — STATE OF WASHINGTON — 17952 — REGISTERED PROFESSIONAL ENGINEER — 10/09/2026

NO.	DATE	REVISION	BY	APPROVED
1	10/09/26	ADDENDUM 1		

Pierce County
Parks and Recreation Services
Lakewood Community Center
9112 Lakewood Drive SW
Lakewood, WA 98499
253.798.4081

BID SET

SN02

ORANGEGATE PARK
PHASE 1 IMPROVEMENTS

TRAFFIC SIGN SCHEDULE

P-111031

REGION NO.	STATE	FEDERAL AID PROJECT NO.	SHEET NO.	TOTAL SHEETS
10	WA	*N/A*		

811 Know what's below. Call before you dig.

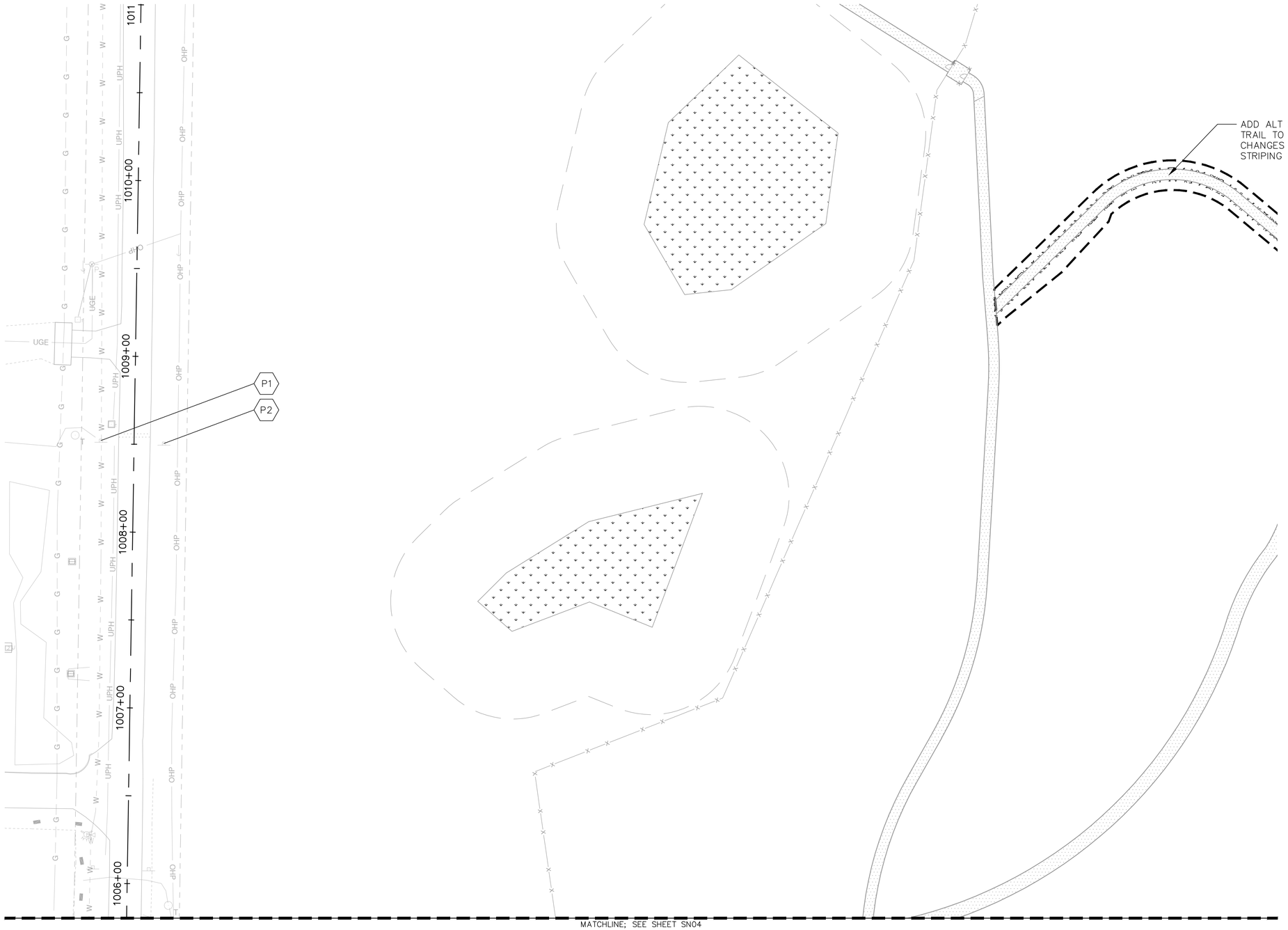

SIGNING LEGEND:

- ## — NEW SIGN
- P## — PROTECT EX. SIGN
- R-## — EX. SIGN REPLACE (LOCATION)
- EXISTING SIGN SINGLE POST
- NEW SIGN SINGLE POST

1

GENERAL NOTES:

1. ALL SIGNS WITHIN EXISTING PIERCE COUNTY RIGHT OF WAY SHALL BE MAINTAINED DURING CONSTRUCTION. NO SIGN INVENTORY HAS BEEN COMPLETED TO CHECK REFLECTIVITY OF EXISTING SIGNS.
2. REFER TO SIGN SCHEDULE ON SHEET SN01 AND SN02.
3. PROTECT EXISTING SIGNS AND POSTS UNLESS NOTED OTHERWISE IN PLANS.

NORTH

0' 15' 30' 60'
SCALE

Drawing: C:\BMS\SKILLINGS-PW-01\TRISTAN ROBERTSON\DMS12837\23014_PS_SN.DWG Layout Tab: SN02 TRAFFIC SIGN AND STRIPING PLAN
Xrefs: L-SHEET CUTS.DWG / 23014_BP_EX_TOPO.DWG / X-SITE-FURN.DWG / X-BASE.DWG / 23014_BP_DR.DWG / PC PARKS TITLEBLOCK.DWG / 23014_BP_BY OTHERS_PIPELINE2.DWG
Date: 10/09/2026 Time: 10:23:10 AM Plotted by: TRISTANROBERTSON

SKILLINGS

DESIGNED BY:	SURVEYED BY:
S. MOLAMPHY	R. EDWARDS
DRAWN BY:	DATE SURVEYED:
S. MOLAMPHY	October 9, 2026
CHECKED BY:	DATE PLOTTED:
T. SKILLINGS	Oct 9, 2026

THOMAS E. SKILLINGS — STATE OF WASHINGTON — 17952 — REGISTERED PROFESSIONAL ENGINEER — 10/09/2026

NO.	DATE	REVISION	BY	APPROVED
1	10/09/26	ADDENDUM 1		

Pierce County
Parks and Recreation Services
Lakewood Community Center
9112 Lakewood Drive SW
Lakewood, WA 98499
253.798.4081

BID SET

SN03

ORANGEGATE PARK
PHASE 1 IMPROVEMENTS

TRAFFIC SIGN AND STRIPING PLAN

P-111031

REGION NO.	STATE	FEDERAL AID PROJECT NO.	SHEET NO.	TOTAL SHEETS
10	WA	*N/A*		

MATCHLINE; SEE SHEET SN03

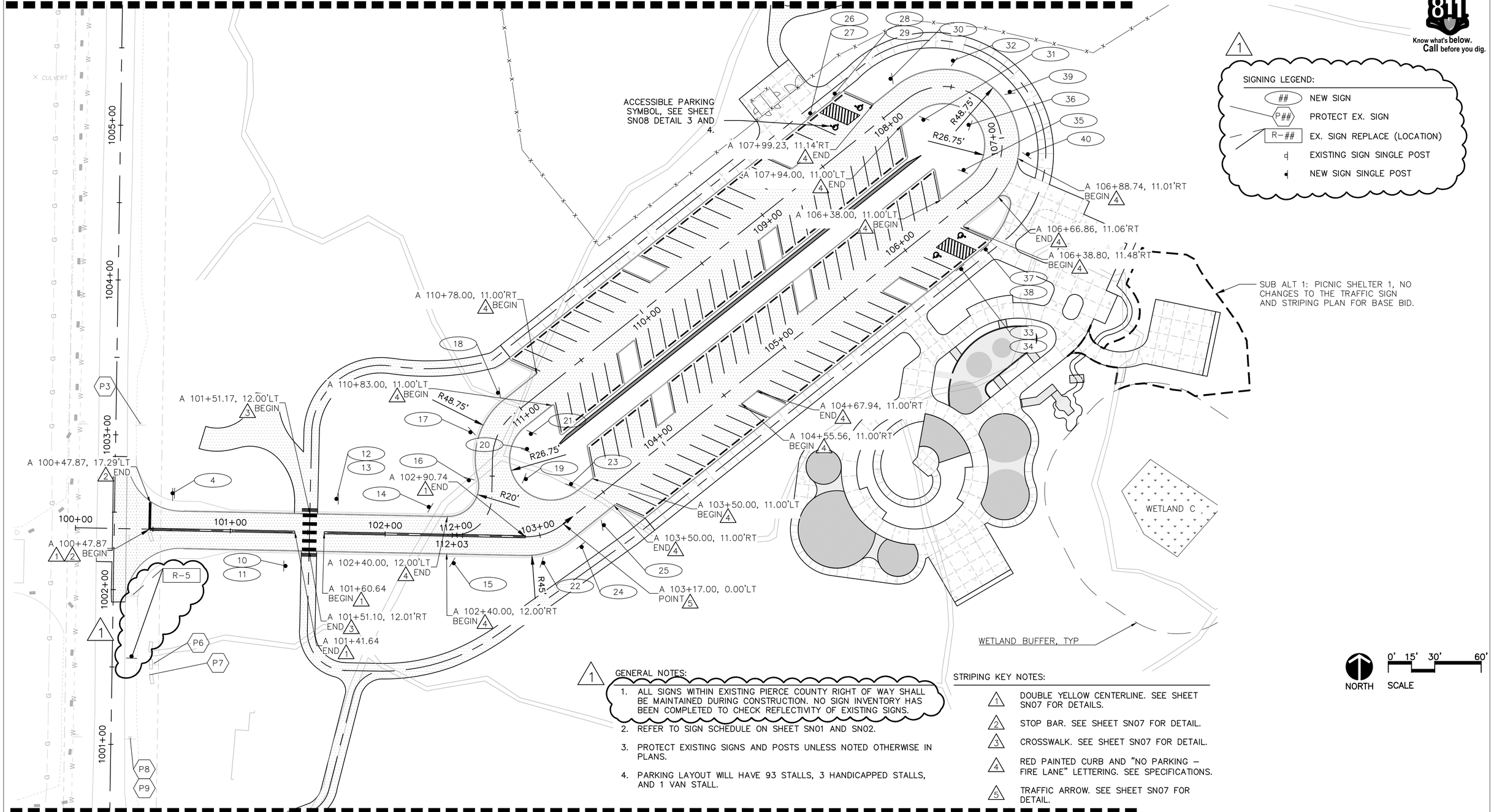

811 Know what's **below.** **Call** before you dig.

1

SIGNING LEGEND:

- ## — NEW SIGN
- P## — PROTECT EX. SIGN
- R-## — EX. SIGN REPLACE (LOCATION)
- EXISTING SIGN SINGLE POST
- NEW SIGN SINGLE POST

1

GENERAL NOTES:

1. ALL SIGNS WITHIN EXISTING PIERCE COUNTY RIGHT OF WAY SHALL BE MAINTAINED DURING CONSTRUCTION. NO SIGN INVENTORY HAS BEEN COMPLETED TO CHECK REFLECTIVITY OF EXISTING SIGNS.
2. REFER TO SIGN SCHEDULE ON SHEET SN01 AND SN02.
3. PROTECT EXISTING SIGNS AND POSTS UNLESS NOTED OTHERWISE IN PLANS.
4. PARKING LAYOUT WILL HAVE 93 STALLS, 3 HANDICAPPED STALLS, AND 1 VAN STALL.

STRIPING KEY NOTES:

1. DOUBLE YELLOW CENTERLINE. SEE SHEET SN07 FOR DETAILS.
2. STOP BAR. SEE SHEET SN07 FOR DETAIL.
3. CROSSWALK. SEE SHEET SN07 FOR DETAIL.
4. RED PAINTED CURB AND "NO PARKING – FIRE LANE" LETTERING. SEE SPECIFICATIONS.
5. TRAFFIC ARROW. SEE SHEET SN07 FOR DETAIL.

NORTH

0' 15' 30' 60'
SCALE

MATCHLINE; SEE SHEET SN05

SKILLINGS

DESIGNED BY: S. MOLAMPHY	*SURVEYED BY:* R. EDWARDS
DRAWN BY: S. MOLAMPHY	*DATE SURVEYED:* October 9, 2026
CHECKED BY: T. SKILLINGS	*DATE PLOTTED:* Oct 9, 2026

THOMAS E. SKILLINGS — STATE OF WASHINGTON — 17952 — REGISTERED PROFESSIONAL ENGINEER — 10/09/2026

NO.	DATE	REVISION	BY	APPROVED
1	10/09/26	ADDENDUM 1		

Pierce County
Parks and Recreation Services
Lakewood Community Center
9112 Lakewood Drive SW
Lakewood, WA 98499
253.798.4081

BID SET

SN04

ORANGEGATE PARK
PHASE 1 IMPROVEMENTS

TRAFFIC SIGN AND STRIPING PLAN

P-111031

Drawing: C:\BM5\SKILLINGS-PW-01\TRISTAN ROBERTSON\DMS12837\23014_PS_SN_2.DWG Layout Tab: SN03 TRAFFIC SIGN AND STRIPING PLAN
Xrefs: X-PLNT.DWG / X-BASE.DWG / 23014_BP_EX_TOPO.DWG / 23014_BP_RD.DWG / 23014_BP_SN.DWG / X-SITE-FURN.DWG / PC PARKS TITLEBLOCK.DWG / 23014_BP_L-SHEET CUTS.DWG
Date: 10/09/2026 Time: 10:24:38 AM Plotted by: TRISTANROBERTSON

REGION NO.	STATE	FEDERAL AID PROJECT NO.	SHEET NO.	TOTAL SHEETS
10	WA	*N/A*		

811 Know what's below. Call before you dig.

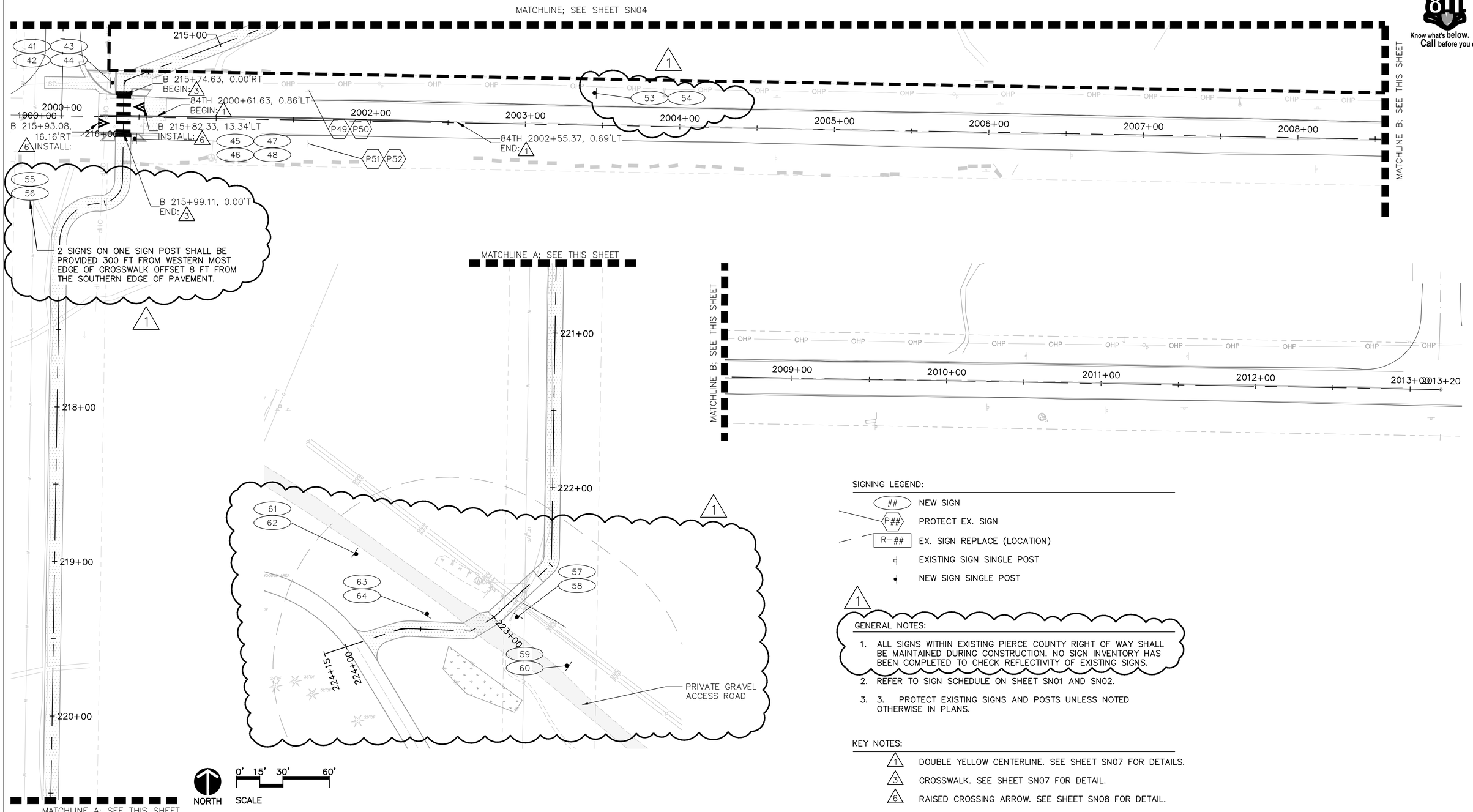

SIGNING LEGEND:

- ## — NEW SIGN
- P## — PROTECT EX. SIGN
- R-## — EX. SIGN REPLACE (LOCATION)
- EXISTING SIGN SINGLE POST
- NEW SIGN SINGLE POST

1

GENERAL NOTES:

1. ALL SIGNS WITHIN EXISTING PIERCE COUNTY RIGHT OF WAY SHALL BE MAINTAINED DURING CONSTRUCTION. NO SIGN INVENTORY HAS BEEN COMPLETED TO CHECK REFLECTIVITY OF EXISTING SIGNS.
2. REFER TO SIGN SCHEDULE ON SHEET SN01 AND SN02.
3. 3. PROTECT EXISTING SIGNS AND POSTS UNLESS NOTED OTHERWISE IN PLANS.

KEY NOTES:

- 1 — DOUBLE YELLOW CENTERLINE. SEE SHEET SN07 FOR DETAILS.
- 3 — CROSSWALK. SEE SHEET SN07 FOR DETAIL.
- 6 — RAISED CROSSING ARROW. SEE SHEET SN08 FOR DETAIL.

SKILLINGS

DESIGNED BY:	SURVEYED BY:
S. MOLAMPHY	R. EDWARDS
DRAWN BY:	DATE SURVEYED:
S. MOLAMPHY	October 9, 2026
CHECKED BY:	DATE PLOTTED:
T. SKILLINGS	Oct 9, 2026

THOMAS E. SKILLINGS — STATE OF WASHINGTON — 17952 — REGISTERED PROFESSIONAL ENGINEER — 10/09/2026

NO.	DATE	REVISION	BY	APPROVED
1	10/09/26	ADDENDUM 1		

Pierce County
Parks and Recreation Services
Lakewood Community Center
9112 Lakewood Drive SW
Lakewood, WA 98499
253.798.4081

BID SET

SN05

ORANGEGATE PARK
PHASE 1 IMPROVEMENTS

TRAFFIC SIGN AND STRIPING PLAN

P-111031

Drawing: C:\BMS\SKILLINGS-PW-01\TRISTAN ROBERTSON\DMS12837\23014_PS_SN_3.DWG Layout Tab: SN04 TRAFFIC SIGN AND STRIPING PLAN
Xrefs: X-PLNT.DWG / X-BASE.DWG / 23014_BP_SN.DWG / PC PARKS TITLEBLOCK.DWG / 23014_BP_EX_COMPOSITE-TOPO.DWG
Date: 10/09/2026 Time: 10:26:31 AM Plotted by: TRISTANROBERTSON

REGION NO.	STATE	FEDERAL AID PROJECT NO.	SHEET NO.	TOTAL SHEETS
10	WA	*N/A*		

NOTE:
SUMMIT WATER AND SUPPLY COMPANY DETAILS SUBJECT TO CHANGE WITHOUT NOTICE. CONTACT SUMMIT WATER AND SUPPLY COMPANY FOR LATEST DETAILS.

811 Know what's **below.** **Call** before you dig.

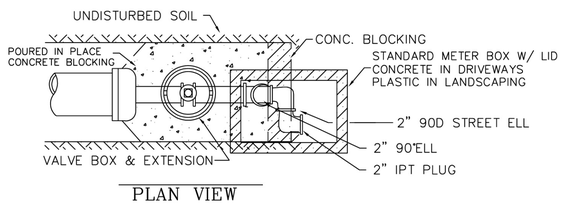

PLAN VIEW

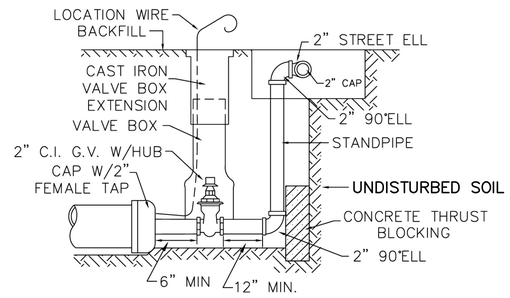

PROFILE VIEW

NOTES

TYPE OF BLOWOFF AND SIZE OF THRUST BLOCKING TO BE DETERMINED BY SUMMIT WATER & SUPPLY CO.

TYPICAL BLOW OFF (1)
SUMMIT WATER DETAIL

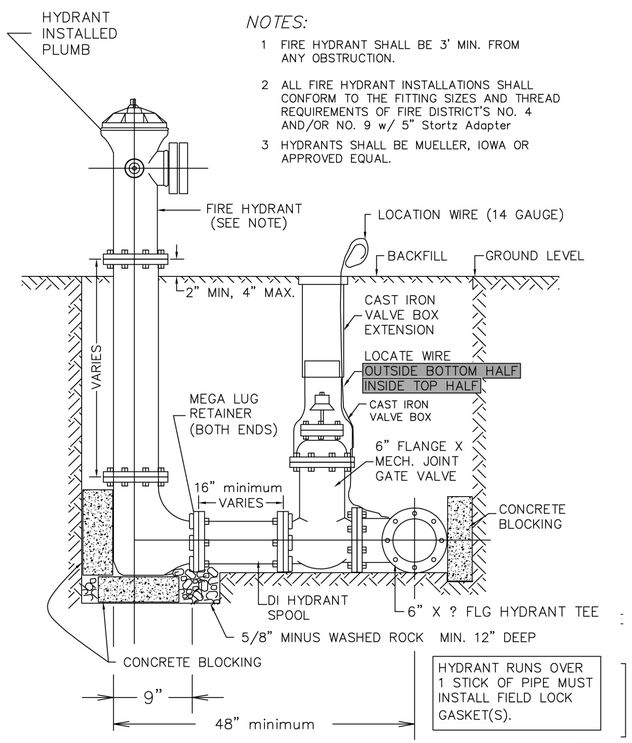

NOTES:

1 FIRE HYDRANT SHALL BE 3' MIN. FROM ANY OBSTRUCTION.

2 ALL FIRE HYDRANT INSTALLATIONS SHALL CONFORM TO THE FITTING SIZES AND THREAD REQUIREMENTS OF FIRE DISTRICT'S NO. 4 AND/OR NO. 9 w/ 5" Stortz Adapter

3 HYDRANTS SHALL BE MUELLER, IOWA OR APPROVED EQUAL.

TYPICAL FIRE HYDRANT INSTALLATION (2)
SUMMIT WATER DETAIL

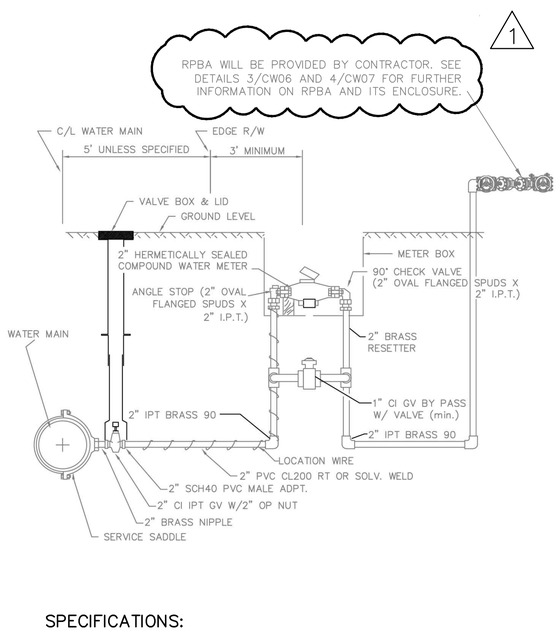

SPECIFICATIONS:

1. METER BOX SHALL BE CONCRETE TYPE 20" X 32" X 12" DEEP WITH 1/4" STEEL LID W/ READER DOOR (MINIMUM).
2. SERVICE PIPE SHALL BE WRAPPED WITH 14 GUAGE SOLID COPPER INSULATED WIRE FOR LOCATING PURPOSES.
3. ALL WATER SERVICE CROSSINGS SHALL BE IN-CASED IN THREE (3) INCH SCH40 PVC PIPE.

TYPICAL 2" WATER SERVICE INSTALLATION WITH RPBA (3)
SUMMIT WATER DETAIL

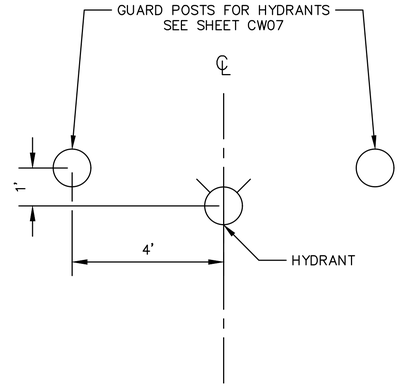

NOTE:
1. LINE BETWEEN GUARD POSTS CENTERS SHALL BE PARALLEL TO FLOW OF TRAFFIC.

HYDRANT BOLLARD DETAIL (4)
NTS

SKILLINGS

DESIGNED BY: S. MOLAMPHY	*SURVEYED BY:* R. EDWARDS
DRAWN BY: S. MOLAMPHY	*DATE SURVEYED:* October 9, 2026
CHECKED BY: T. SKILLINGS	*DATE PLOTTED:* Oct 9, 2026

THOMAS E. SKILLINGS — STATE OF WASHINGTON — 17952 — REGISTERED PROFESSIONAL ENGINEER — 10/09/2026

NO.	DATE	REVISION	BY	APPROVED
1	10/09/26	ADDENDUM 1		

Pierce County
Parks and Recreation Services
Lakewood Community Center
9112 Lakewood Drive SW
Lakewood, WA 98499
253.798.4081

BID SET

CW04

ORANGEGATE PARK
PHASE 1 IMPROVEMENTS
WATER UTILITIES DETAILS
P-111031

Drawing: C:\BM\SKILLINGS-PW-01\TRISTAN ROBERTSON\DMS12837\23014_DE_WA.DWG Layout Tab: 23014_DE_WA
Xrefs: PC PARKS TITLEBLOCK.DWG
Date: 10/09/2026 Time: 10:27:57 AM Plotted by: TRISTANROBERTSON

REGION NO.	STATE	FEDERAL AID PROJECT NO.	SHEET NO.	TOTAL SHEETS
10	WA	*N/A*		

Know what's below. Call before you dig.

ELECTRICAL LEGEND

SYMBOL	DESCRIPTION
	EXISTING POWER PANEL
	BRANCH CIRCUIT WIRING AND CONDUIT AS REQUIRED FOR CKTS DEVICES AND EQUIP INDICATED ON PLANS. (WIRING AND CONDUIT SIZE MAY NOT APPEAR ON PLANS). PROVIDE CONDUCTORS AND CONDUIT PER NEC CODE. #12 AWG, 3/4"C. MIN. EMT OR RIGID STEEL. ⏚ INDICATES EQUIP GND. ⏚ INDICATES ISOLATED GROUND.
	CONDUIT UNDERGROUND - COMMUNICATIONS
	CONDUIT CONCEALED IN WALL OR CEILING SPACE ONLY
	CONDUIT UNDER GROUND - POWER
	EXISTING CONDUIT
	CONDUIT UP
	CONDUIT DOWN
	CONDUIT STUB
	BRANCH CIRCUIT HOME RUN
	GROUNDING ELECTRODE PER CODES
	SINGLE HEAD POLE LIGHT, SEE LIGHT FIXTURE SCHEDULE
	SPECIAL EQUIPMENT CONNECTION
	DUPLEX RECEPTACLE, GFCI TYPE
	LIMITS OF WORK

ABBREVIATIONS

ABBRV	DESCRIPTION	ABBRV	DESCRIPTION
AFC	AVAILABLE FAULT CURRENT	MDP	MAIN DISTRIBUTION PANEL
AFF	ABOVE FINISHED FLOOR	MH	MANHOLE
AFG	ABOVE FINISHED GRADE	MLO	MAIN LUGS ONLY
AL	ALUMINUM	(N)	NEW
BKR	BREAKER	N	NEUTRAL
C	CONDUIT	NEC	NATIONAL ELECTRICAL CODE
CCTV	CLOSED CIRCUIT TELEVISION CAMERA	OFCI	OWNER-FURNISHED, CONTRACTOR-INSTALLED
CKT	CIRCUIT		
CO	CONDUIT AND PULL WIRE ONLY	OL	OVERLOAD
CTRL	CONTROL	PH	PHASE
CU	COPPER	PNL	PANEL, PANELBOARD
EC	ELECTRICAL CONTRACTOR	RCPT	RECEPTACLE
EQPT	EQUIPMENT	REF	REFERENCE, REFRIGERATOR
(E)	EXISTING	SDP	SECONDARY DISTRIBUTION PNL
(F)	FUTURE	SPD	SURGE PROTECTION DEVICE
G, GND	GROUND	SPECS	SPECIFICATIONS
G.C.	GENERAL CONTRACTOR	SW	SWITCH
GFCI	GROUND FAULT CIRCUIT INTERRUPTER	THRU	THROUGH
GFP	GROUND FAULT PROTECTION	(TYP)	TYPICAL
HH	HANDHOLE	UNO	UNLESS NOTED OTHERWISE
LCP	LIGHTING CONTROL PANEL	W	WIRE
LTG	LIGHTING	WP	WEATHERPROOF
LV	LOW-VOLTAGE	XFMR	TRANSFORMER

GENERAL REQUIREMENTS

1. PROVIDE COMPLETE WORK FOR REQUIREMENTS AS DESCRIBED ON LEGEND.
2. ALL ELECTRICAL WORK AND RELATED ACTIVITIES PERFORMED ON-SITE SHALL BE DONE IN ACCORDANCE WITH NATIONAL ELECTRIC CODE (NEC) STANDARDS BEING ENFORCED BY ALL APPLICABLE JURISDICTIONAL REQUIREMENTS AT THE TIME OF CONSTRUCTION.
3. ALL ONE-LINE DIAGRAMS AND RACEWAY ROUTING ARE SCHEMATIC AND DO NOT SHOW EXACT PHYSICAL ARRANGEMENT OF EQUIPMENT ON DRAWINGS. ALL JUNCTION BOXES, AND PULLBOXES SHOWN ARE MINIMUM REQUIREMENTS. PROVIDE FITTINGS AND PULLBOXES OF ADEQUATE SIZE IN RACEWAY SYSTEMS WHEREVER NECESSARY OR REQUIRED BY NATIONAL ELECTRICAL CODE. PROVIDE EXPANSION JOINT FITTINGS FOR RACEWAY PASSING THROUGH NEW OR EXISTING EXPANSION JOINTS INSTALLED BETWEEN BUILDINGS. VERIFY EXACT LOCATIONS AND DETAILS OF EXPANSION JOINTS PRIOR TO WORK. COORDINATE ALL RACEWAY ROUTING, PULLBOXES, AND EQUIPMENT LOCATIONS WITH OTHER TRADES TO AVOID CONFLICTS OF EQUIPMENT INSTALLATIONS. ALL EMPTY CONDUITS SHALL HAVE PULL WIRES.
4. BRANCH CIRCUIT HOME RUNS ARE NOT INDICATED WITH NUMBER OF CONDUCTORS/ WIRES. PROVIDE ALL BRANCH CIRCUIT CONDUCTORS/ WIRES AS REQUIRED FOR COMPLETE OPERATION OF ALL DEVICES AND EQUIPMENT INDICATED. PROVIDE INDIVIDUAL NEUTRALS FOR EACH CIRCUIT.
5. CONTRACTOR SHALL EXAMINE THE SITE PRIOR TO BID TO BECOME COMPLETELY FAMILIAR WITH THE EXTENT OF THE PROJECT AND DEMOLITION.
6. CONTRACTOR SHALL SUBMIT PANEL SCHEDULES WITH ALL LOADS IDENTIFIED AND CIRCUIT BREAKER TYPES AND SIZES FOR REVIEW AND APPROVAL PRIOR TO INSTALLATION.
7. CONTRACTOR SHALL RETURN SIDEWALKS, LANDSCAPING, PLANTERS, IRRIGATION SYSTEMS AND ANY OTHER FACILITIES DISTURBED BY THE WORK TO THE SAME OR BETTER CONDITION THAT EXISTED PRIOR TO THE COMMENCEMENT OF THE WORK.
8. DO NOT TAKE MEASUREMENTS FROM PLANS FOR DEVICE LOCATIONS. FIELD VERIFY EXACT DEVICE, EQUIPMENT LOCATIONS, AND MOUNTING HEIGHTS WITH OWNER'S REPRESENTATIVE FOR PROPER INSTALLATION.
9. IF ANY DISCREPANCIES BETWEEN THE ELECTRICAL DRAWINGS AND FIELD CONDITIONS ARE FOUND, ELECTRICAL CONTRACTOR SHALL INFORM ELECTRICAL ENGINEER IMMEDIATELY UPON DISCOVERY.
10. INCLUDE COST OF PROVIDING ALL ELECTRICAL CONNECTIONS AS REQUIRED FOR FULL OPERATION OF ALL CONTRACTOR INSTALLED EQUIPMENT.
11. LABEL ALL EQUIPMENT, J-BOXES AND RACEWAYS TO INCLUDE SERVING PANEL NAME AND CIRCUIT NUMBER(S).
12. PROVIDE ALL WIRING TO PANELS AND POWER DISTRIBUTION EQUIPMENT IN ACCORDANCE WITH ONE-LINE POWER DIAGRAM.
13. RACEWAYS, WIRE SIZES AND CIRCUITS AS SHOWN REPRESENT INTENT OF INSTALLATION, BUT MAY NOT NECESSARILY REPRESENT THE COMPLETE WIRING COUNTS AND MINIMUM SIZES FOR CONNECTING THE CIRCUITS SHOWN. CONTRACTOR SHALL INCLUDE IN THE BID, ALL REQUIRED RACEWAY SIZES AND NUMBER OF CONDUCTORS IN ORDER TO PROVIDE ALL CIRCUITS SHOWN.
14. REPORT ANY AND ALL SUSPECTED HAZARDOUS MATERIAL TO OWNER'S REP IMMEDIATELY UPON DISCOVERY. ALL SUCH MATERIALS SHALL BE DEMOLISHED AND DISPOSED OF BY A CONTRACTOR LICENSED TO DO THIS WORK IN ACCORDANCE WITH ALL LAWS AND ORDINANCES.
15. PRIOR TO PREPARATION OF BID, VISIT JOBSITE AND EXAMINE EXISTING CONDITIONS. WORK SCOPE SHALL INCLUDE ALL COSTS FOR CUTTING, PATCHING AND CORE DRILLING REQUIRED TO INSTALL CONDUIT AND OTHER WIRING METHODS THROUGH EXISTING WALLS, FLOORS AND OTHER BUILDING ELEMENTS (NOT SHOWN ON DRAWINGS).
16. PROVIDE TEMPORARY POWER FOR CONSTRUCTION. TEMPORARY POWER MAY BE IN THE FORM OF PORTABLE GENERATOR SET; CONNECTION TO UTILITIES COMPANY'S POWER POLE OR EXISTING FACILITY'S ELECTRICAL SYSTEM WITH WRITTEN PRIOR APPROVAL FROM THE OWNER.
17. ANY AND ALL SHUT-DOWNS SHALL BE SCHEDULED WITH THE OWNER PRIOR TO THE WORK. TEMPORARY POWER SHALL BE AVAILABLE AT ALL TIMES WHEN WORK ON ACTIVE POWER SYSTEMS IS UNDERWAY SO THAT, IN THE CASE OF AN UNSCHEDULED POWER OUTAGE, SUCH TEMPORARY POWER SYSTEMS CAN BE PUT IN PLACE IMMEDIATELY AND KEPT OPERATIONAL UNTIL THE PERMANENT POWER SUPPLY IS RESTORED.
18. IT IS NOT PERMISSIBLE, WITHOUT THE SPECIFIC WRITTEN PERMISSION FROM THE OWNER, TO UTILIZE ANY POWER OR POWER GENERATION EQUIPMENT WHICH IS OWNED, LEASED, OR OTHERWISE UNDER THE DIRECT CONTROL OF THE OWNER. THE ELECTRICAL CONTRACTOR SHALL FURNISH HIS OWN SEPARATE TEMPORARY POWER SYSTEM SO AS NOT TO INTERFERE WITH ANY EXISTING SYSTEM
19. IDENTIFY, INVESTIGATE, AND PROTECT ALL EXISTING ACTIVE SYSTEMS FROM DAMAGE AT ALL TIMES. ANY DAMAGES SHALL BE REPAIRED IMMEDIATELY PRIOR TO CONTINUING OR PERFORMING ANY OTHER WORK.
20. WHERE EXISTING WORK HAS BEEN REMOVED, PATCH ALL EXISTING SURFACES TO COMPLETELY MATCH ADJACENT SURFACES.
21. PROVIDE ADDITIONAL HAND HOLES WITH COBALT SSL VANDAL RESISTANT LIDS AS NEEDED TO COMPLY WITH MAXIMUM CONDUIT BEND RADIUSES PER NEC CODE.
22. REFERENCE APPENDIX H SPECIAL PROVISIONS CONCERNING REQUIREMENTS FOR PUBLIC ILLUMINATION AND RRFB AT RAISED CROSSING.

LIGHT FIXTURE SCHEDULE

TYPE	DESCRIPTION	MANUFACTURER		LIGHT SOURCE			INPUT WATTS	NOTES
		** / NAME	** / CATALOG NUMBER	TYPE	* / LUMENS	CCT (K)		
ES1	PARKING AREA LED LUMINAIRE WITH 30FT POLE, SINGLE HEAD, SINGLE ARM AND DECORATIVE BASE. BUG RATING B2-U0-G2	NLS LIGHTING	**FIXTURE:** CAL-1 TP1 S6 T4 48L 53 30K7 UNV AM BLK	LED	IL 8,480	3000	80	1
			POLE: RSSP (30FT) 5R 11G 12BC SGL BLK 136					1,2
			BASE: DPB-900 5R BLK					1
			ARM: A1-S SGL 5R BLK (SINGLE ARM)					1
	POLE MOUNTED OCCUPANCY CONTROLLED DIMMING AND ON/OFF PHOTOCELL	SENSOR SWITCH	**CONTROL:** SBOR 6 ODP BK (DIM LEVEL)					
ES2	PARKING AREA LED LUMINAIRE WITH 30FT POLE, SINGLE HEAD, SINGLE ARM AND DECORATIVE BASE. BUG RATING B2-U0-G2	NLS LIGHTING	**FIXTURE:** CAL-1 TP1 S6 T2 48L 53 30K7 UNV AM BLK	LED	IL 8,480	3000	80	1
			POLE: RSSP (30FT) 5R 11G 12BC SGL BLK 136					1,2
			BASE: DPB-900 5R BLK					1
			ARM: A1-S SGL 5R BLK (SINGLE ARM)					1
	POLE MOUNTED OCCUPANCY CONTROLLED DIMMING AND ON/OFF PHOTOCELL	SENSOR SWITCH	**CONTROL:** SBOR 6 ODP BK (DIM LEVEL)					

NOTES:
* DL = DELIVERED LUMENS, IL = INITIAL LUMENS, (#) WHERE SHOWN IN FIXTURE TYPE AND CATALOG NUMBER = REFER TO PLANS AND MEASURE FOR FIXTURE LENGTHS
** ALTERNATE MANUFACTURER MUST MEET DESIGN INTENT OF THE PROJECT INCLUDING MINIMUM LIGHT LEVELS. (REFER TO DIVISION 01 FOR SUBSTITUTIONS)
1. COORDINATE FINISH COLORS WITH ARCHITECT.
2. PROVIDE NIPPLE ON POLE FOR SENSOR SWITCH CONNECTION. COORDINATE LOCATION OF NIPPLE WITH SENSOR SWITCH MANUFACTURER

UTILITY CONTACT INFORMATION

TACOMA POWER (ELECTRICAL POWER)

CHRIS GILL (253) 441-4195

PIERCE COUNTY (TRAFFIC ENGINEERING)

CLAUDIA HENRY (253) 433-0791

LUMEN (FIBER/INTERNET)

BILL OLSON (206) 778-5001

TRES WEST ENGINEERS, INC.
2702 SOUTH 42nd ST #301
TACOMA, WA 98409-7315
TEL (253) 472-3300
www.treswest.com

DESIGNED BY: DPH	SURVEYED BY:
DRAWN BY: DPH	DATE SURVEYED:
CHECKED BY: DPH	DATE PLOTTED: August 14, 2026

JAMES J. CHONG — STATE OF WASHINGTON — 53813 — REGISTERED PROFESSIONAL ENGINEER

8/14/2026

NO.	DATE	REVISION	BY	APPROVED
1	10/08/26	ADDENDUM 1		

Pierce County
Parks and Recreation Services
Lakewood Community Center
9112 Lakewood Drive SW
Lakewood, WA 98499
253.798.4081

BID SET

E01

ORANGEGATE PARK PHASE 1 IMPROVEMENTS

ELECTRICAL LEGEND, NOTES AND SCHEDULES

P-111031

Drawing: P:\PROJ2023\230502 ORANGEGATE PARK PHASE 1\DRAWINGS\01 WORKING DRAWINGS\230502_E01.DWG Layout Tab: 34X22
Xrefs: PC PARKS TITLEBLOCK.DWG / JJC WASH PE.DWG
Date: 10/08/2026 Time: 12:40:51 PM Plotted by: DPH

REGION NO.	STATE	FEDERAL AID PROJECT NO.	SHEET NO.	TOTAL SHEETS
10	WA	*N/A*		

MATCHLINE; SEE SHEET E02

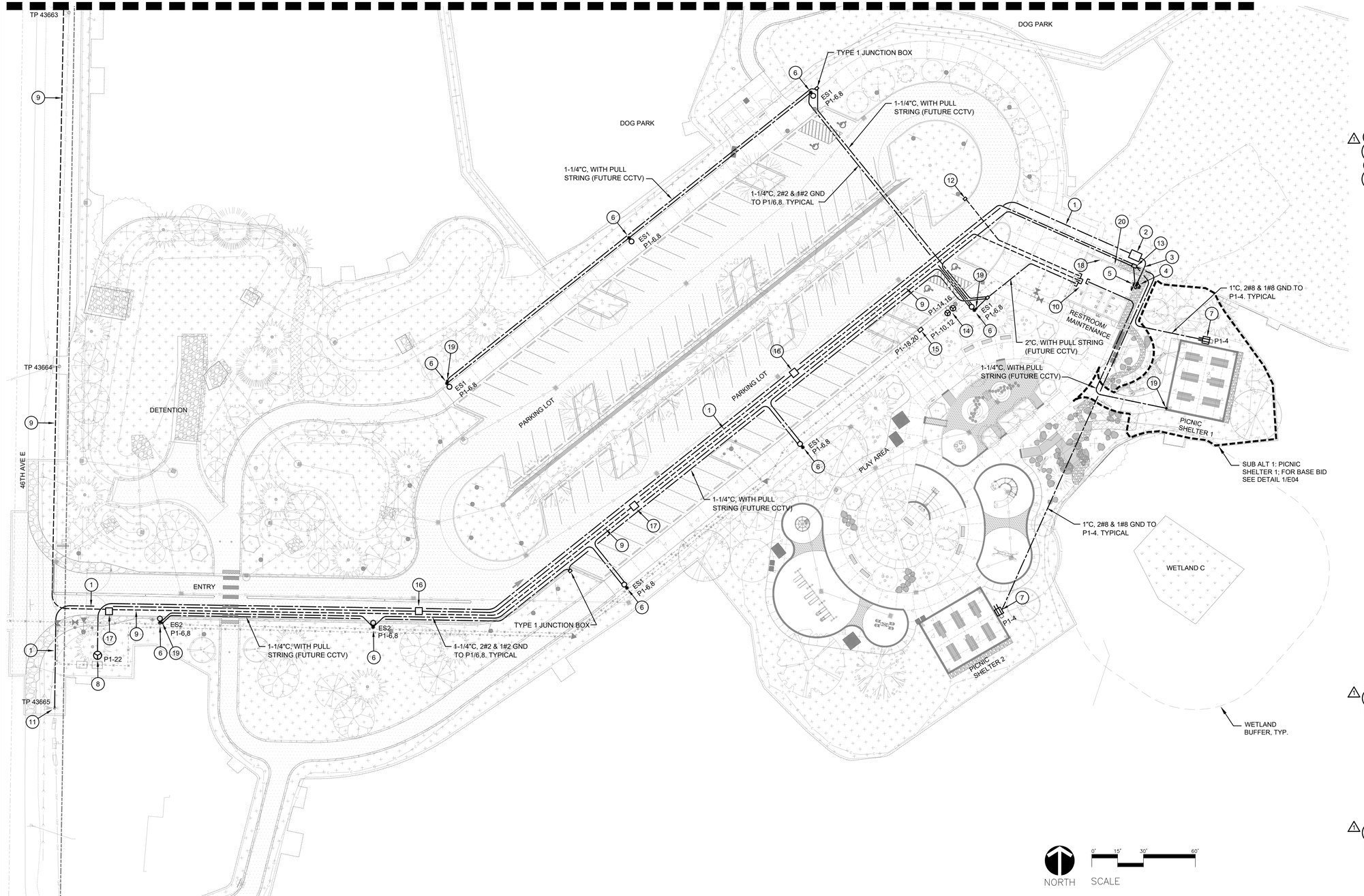

MATCHLINE; SEE SHEET E04

Know what's below. Call before you dig.

PLAN NOTES

1. UNDERGROUND PRIMARY SERVICE CONDUCTORS (BY TPU) AND CONDUIT (BY CONTRACTOR) TO BE ROUTED FROM EXISTING UTILITY POLE ON 46TH AVE E. TO TRANSFORMER LOCATION. SEE PLAN NOTE 2. SEE TACOMA POWER ELECTRICAL CONSTRUCTION STANDARD C-UG-1100 FOR ADDITIONAL INFORMATION. COORDINATION TO BE PROVIDED WITH TACOMA POWER FOR FINAL CONNECTION.
2. PROVIDE TACOMA POWER VAULT 444 WITH TRANSFORMER COVER #1 FOR TACOMA POWER TRANSFORMER. SEE TACOMA POWER ELECTRICAL CONSTRUCTION STANDARD C-UG-2000, A-UG-1200 AND C-UG-1700 AND ONE-LINE DIAGRAM ON SHEET E05 FOR ADDITIONAL INFORMATION. PROVIDE AND INSTALL GUARD POSTS PER CONSTRUCTION STANDARD C-UG-1400.
3. PROVIDE UNDERGROUND SECONDARY SERVICE CONDUCTORS AND CONDUIT TO BE ROUTED FROM TRANSFORMER TO METER BASE. COORDINATE REQUIREMENTS WITH UTILITY COMPANY.
4. METER BASE AND METER. SEE TACOMA POWER ELECTRICAL CONSTRUCTION STANDARD C-MR-0005 FOR ADDITIONAL INFORMATION AND REQUIREMENTS.
5. ELECTRICAL PANELS P1 AND P2.
6. PROVIDE CONCRETE FOUNDATION AND LIGHT FIXTURE TYPE AS SHOWN. SEE DETAIL 7 ON SHEET S201.
7. PROVIDE WEATHERPROOF LOCKABLE GFCI RECEPTACLE. MOUNT ON 4X4 TREATED WOOD POST AT +18"AFG. PROVIDE 12" DIAMETER, 18" DEEP CONCRETE FOUNDATION FOR SUPPORT OF POST. PROVIDE ON/OFF CONTROL SWITCH IN BUILDING.
8. HEATED ENCLOSURE BY CIVIL. PROVIDE 1-1/4" CONDUIT AND 2#2 WITH 1#2 GROUND TO ELECTRICAL PANEL. COORDINATE WITH CIVIL FOR FINAL CONNECTIONS.
9. PROPOSED CONDUIT ROUTING FOR ON-SITE COMMUNICATION SERVICE. 2" CONDUIT WITH PULL WIRE BY CONTRACTOR, FIBER BY LUMEN. COORDINATE WITH LUMEN PRIOR TO INSTALLATION.
10. COMMUNICATION SERVICE HEAD-END LOCATION IN RESTROOM/MAINTENANCE BUILDING. COORDINATE ROUGH-IN LOCATION WITH LUMEN AND BUILDING MANUFACTURER.
11. PROVIDE POLE CONDUIT RISER PER TACOMA POWER ELECTRICAL CONSTRUCTION STANDARD C-UG-1200.
12. PROVIDE WSDOT TYPE 1 JUNCTION BOX AND STUB 2" CONDUIT INTO BUILDING AS SHOWN FOR FUTURE USE.
13. PROVIDE WSDOT TYPE 2 JUNCTION BOX. ROUTE CONDUITS TO ELECTRICAL PANEL AND SITE AMENITIES AS SHOWN.
14. PROVIDE CONCRETE FOUNDATION (SEE DETAIL 5 ON SHEET S201) AND (1) DUAL HEAD ELECTRIC VEHICLE CHARGING STATION AS SHOWN AND INSTALL PER MANUFACTURERS RECOMMENDATIONS. PROVIDE 1-1/4"C, 4#6 & 1#6 GROUND TO PANEL LOCATED IN RESTROOM BUILDING.
15. PROVIDE CONCRETE FOUNDATION (SEE DETAIL 5 ON SHEET S201) AND JUNCTION BOX FOR FUTURE SINGLE HEAD ELECTRICAL VEHICLE CHARGING STATION. PROVIDE 1-1/4"C, 2#6 & 1#6 GROUND TO PANEL IN RESTROOM BUILDING.
16. PROVIDE POWER VAULT WITH H-20 TRAFFIC RATED COVER PER TACOMA POWER ELECTRICAL CONSTRUCTION STANDARDS C-UG-2000, C-UG-1100 AND C-UG-1500.
17. PROVIDE COMMUNICATION VAULT WITH TRAFFIC RATED COVER PER LUMEN REQUIREMENTS.
18. PROVIDE DEDICATED 120V, 20A RECEPTACLES FOR MAINTENANCE EQUIPMENT CHARGING. COORDINATE LOCATIONS, TYPICAL 3.
19. STUB 1-1/4"C WITH PULL STRING ABOVE GRADE AT FOUNDATION AND CAP FOR FUTURE CCTV WIRING.
20. PROVIDE ELECTRICAL ROUGH-IN AT MAINTENANCE DOOR FOR FUTURE ACCESS CONTROL. SEE APPENDIX B FOR FURTHER DETAILS.

TRES WEST ENGINEERS, INC.
2702 SOUTH 42nd ST #301
TACOMA, WA 98409-7315
TEL (253) 472-3300
www.treswest.com

DESIGNED BY:	SURVEYED BY:
DPH	
DRAWN BY:	DATE SURVEYED:
DPH	
CHECKED BY:	DATE PLOTTED:
DPH	August 14, 2026

JAMES J. CHONG — STATE OF WASHINGTON — 53813 — REGISTERED PROFESSIONAL ENGINEER

8/14/2026

NO.	DATE	REVISION	BY	APPROVED
1	10/08/26	ADDENDUM 1		

Pierce County
Parks and Recreation Services
Lakewood Community Center
9112 Lakewood Drive SW
Lakewood, WA 98499
253.798.4081

BID SET

E03

ORANGEGATE PARK PHASE 1 IMPROVEMENTS

ELECTRICAL SITE PLAN

P-111031

Drawing: P:\PROJ2023\230502 ORANGEGATE PARK PHASE 1\DRAWINGS\01 WORKING DRAWINGS\230502_E03.DWG Layout Tab: 34X22
Xrefs: [DIESEL evaluation failed)
Date: 10/08/2026 Time: 12:40:15 PM Plotted by: DPH

REGION NO.	STATE	FEDERAL AID PROJECT NO.	SHEET NO.	TOTAL SHEETS
10	WA	*N/A*		

811 Know what's **below.** **Call** before you dig.

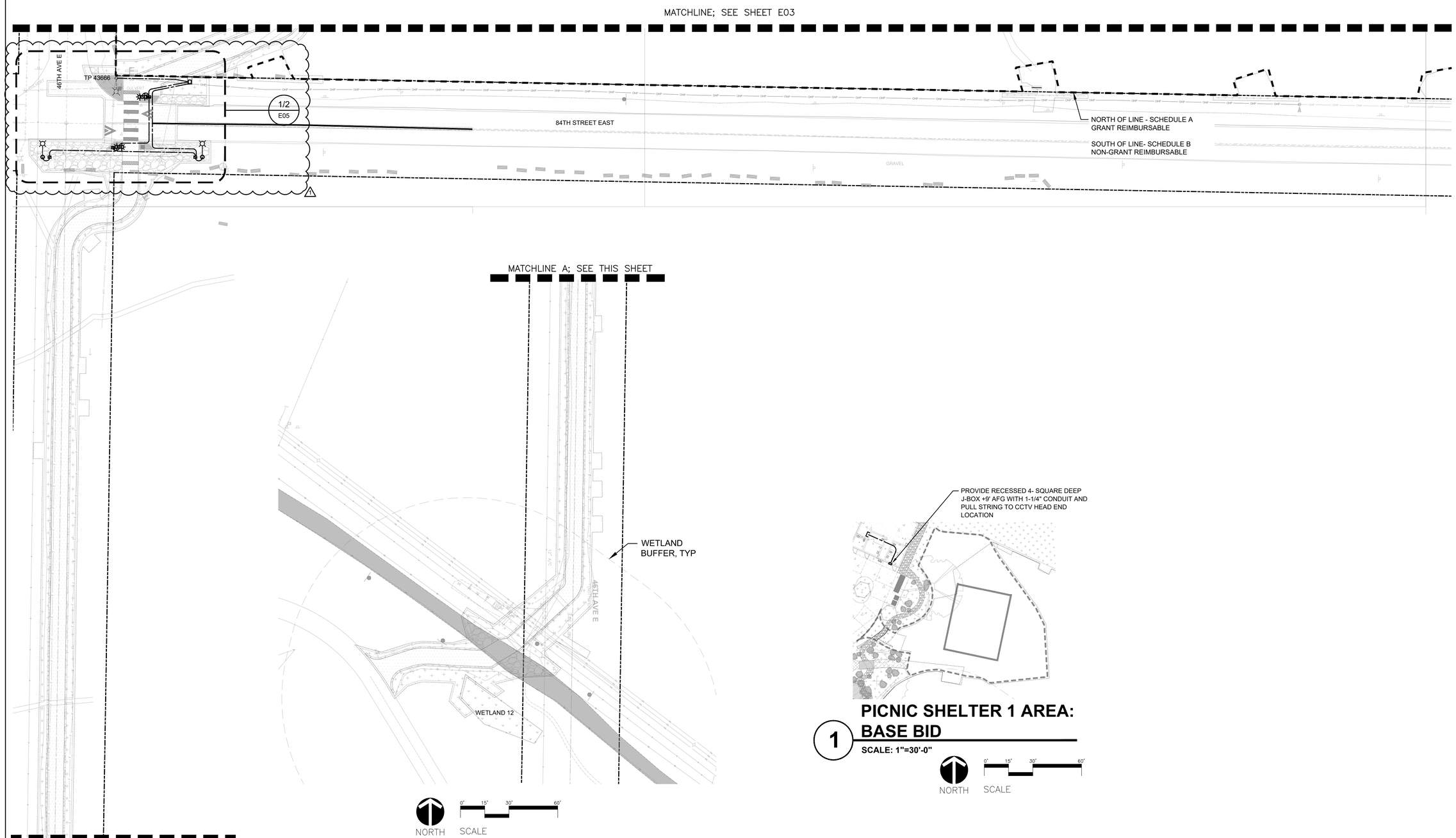

1 PICNIC SHELTER 1 AREA: BASE BID

SCALE: 1"=30'-0"

NORTH SCALE 0' 15' 30' 60'

TRES WEST ENGINEERS, INC.
2702 SOUTH 42nd ST #301
TACOMA, WA 98409-7315
TEL (253) 472-3300
www.treswest.com

DESIGNED BY: DPH	SURVEYED BY:
DRAWN BY: DPH	DATE SURVEYED:
CHECKED BY: DPH	DATE PLOTTED: August 14, 2026

JAMES J. CHONG — STATE OF WASHINGTON — 53813 — REGISTERED PROFESSIONAL ENGINEER

8/14/2026

NO.	DATE	REVISION	BY	APPROVED
1	10/08/26	ADDENDUM 1		

Pierce County
Parks and Recreation Services
Lakewood Community Center
9112 Lakewood Drive SW
Lakewood, WA 98499
253.798.4081

BID SET

E04

ORANGEGATE PARK
PHASE 1 IMPROVEMENTS

ELECTRICAL SITE PLAN

P-111031

Drawing: P:\PROJ2023\230502 ORANGEGATE PARK PHASE 1\DRAWINGS\01 WORKING DRAWINGS\230502_E04.DWG Layout Tab: 34X22
Xrefs: [DIESEL evaluation failed]
Date: 10/08/2026 Time: 11:46:02 AM Plotted by: DPH

REGION NO.	STATE	FEDERAL AID PROJECT NO.	SHEET NO.	TOTAL SHEETS
10	WA	*N/A*		

811 Know what's below. Call before you dig.

LIGHT / RRFB STANDARD SCHEDULE

STD NO.	SERVICE-CIRCUIT	STATION/OFFSET	TYPE/DIST/WATTS	MAST ARM	MOUNTING HEIGHT
1	84TH STREET E - CIRCUIT A	2000+84, 20' RT	II/REG/113	10 FT	40 FT
2	84TH STREET E - CIRCUIT A	1900+85, 21' RT	II/REG/113	10 FT	40 FT
3	84TH STREET E - CIRCUIT RRFB	2000+47, 17' LT	N/A	N/A	N/A
4	84TH STREET E - CIRCUIT RRFB	2000+33, 14' RT	N/A	N/A	N/A

NOTES:
OFFSET DISTANCES INDICATED ARE FROM CONSTRUCTION CENTERLINE TO THE CENTER OF LIGHT / RRFB STANDARD.

COPPER WIRING SCHEDULE

RUN NO.	CONDUIT *	WIRE	COMMENTS
1	2" RMC	2#8, 3#14 (PHOTOCELL) & 1#8 GROUND	POLE & BRACKET CONDUCTORS (2#10, 1#8 GROUND) INSIDE POLE FROM FUSED DISCONNECT TO LUMINAIRE
2	2" RMC	2#10 & 1#8 GROUND (CONTROL UNIT POWER)	RECTANGULAR RAPID FLASHING BEACON (RRFB) CONTROL UNIT. PROVIDE WHITE NEUTRAL WIRE PER NEC.
3	2" RMC	8C (PPB) 2-4C (FLASHERS) 1#8 GROUND	RECTANGULAR RAPID FLASHING BEACON (RRFB), PEDESTRIAN PUSH BUTTON (PPB), FLASHERS
4	(2) 2" RMC	1 CONDUIT WITH 2#10 & 1#8 GROUND (CONTROL UNIT POWER) 1 CONDUIT WITH 8C (PPB) 2-4C (FLASHERS)	RECTANGULAR RAPID FLASHING BEACON (RRFB) CONTROL UNIT & RRFB, PEDESTRIAN PUSH BUTTON (PPB), FLASHERS. PROVIDE WHITE NEUTRAL WIRE PER NEC.
5	2" RMC	3#2 (POWER)	SERVICE
6	2" RMC	2#8 & 1#8 GROUND	POLE & BRACKET CONDUCTORS (2#10, 1#8 GROUND) INSIDE POLE FROM FUSED DISCONNECT TO LUMINAIRE

LEGEND

1	STREET LIGHT LUMINAIRE AND FOUNDATION
	JUNCTION BOX WITH ANTI SLIP LOCKING LID. (SEE WSDOT TYPE 1 J-40.10-02 STANDARD DWGS).
	JUNCTION BOX WITH ANTI SLIP LOCKING LID. (SEE WSDOT TYPE 2 J-40.10-02 STANDARD DWGS).
	RECTANGULAR RAPID RESPONSE FLASHING BEACON (RRFB). SEE PIERCE COUNTY STANDARD DRAWINGS
	NEW UNDERGROUND CONDUIT AND WIRE
1	CONDUIT/WIRE RUN NUMBER. SEE SCHEDULES THIS SHEET FOR ADDITIONAL INFORMATION
	SERVICE CABINET & FOUNDATION REFERENCE PIERCE COUNTY STANDARD DRAWINGS

ELECTRICAL SUBMITTAL NOTES

1. SEE SPECIAL PROVISIONS FOR ELECTRICAL SUBMITTAL REQUIREMENTS AND PROCESS.
2. NO ELECTRICAL WORK MAY BEGIN UNTIL A COMPLETE SET OF CATALOG CUTS AND SHOP DRAWINGS ARE APPROVED BY BOTH THE ENGINEER AND PIERCE COUNTY TRAFFIC ENGINEERING.
3. CATALOG CUTS AND SHOP DRAWINGS SHALL BE SUBMITTED TO THE ENGINEER, PIERCE COUNTY DEVELOPMENT ENGINEERING, AND PIERCE COUNTY TRAFFIC ENGINEERING. THE CONTACT AT PIERCE COUNTY TRAFFIC ENGINEERING IS CLAUDIA HENRY, P.E. (CLAUDIA.HENRY@PIERCECOUNTYWA.GOV). ITEMS SUBMITTED TO PIERCE COUNTY TRAFFIC ENGINEERING MAY BE SUBMITTED ELECTRONICALLY VIA EMAIL. CONTACT THE ENGINEER AND PIERCE COUNTY DEVELOPMENT ENGINEERING TO DETERMINE THEIR SUBMITTAL PROCESS.
4. FOR ALL ITEMS REQUIRING WSDOT INSPECTION (JUNCTION BOXES AND ANCHOR BOLTS), THE CONTRACTOR SHALL PROVIDE BILLING INFORMATION AND A STATEMENT THAT THE CONTRACTOR WILL BE RESPONSIBLE FOR ALL COSTS OF THE INSPECTION TO CLAUDIA HENRY AT THE ABOVE EMAIL ADDRESS. ITEMS REQUIRING INSPECTION WILL NOT BE ALLOWED TO BE INSTALLED WITHOUT APPROVAL STAMPS.
5. WSDOT TYPICALLY REQUIRES THAT THE JUNCTION BOX INSPECTION BE COMPLETED AT THE FACTORY. THE ELECTRICAL CONTRACTOR SHOULD PLAN FOR THIS IN THE SUBMITTAL SCHEDULE.

ELECTRICAL CONSTRUCTION NOTES

1. PIERCE COUNTY RECOMMENDS THE ELECTRICAL CONTRACTOR CONTACT TRAFFIC ENGINEERING FOR A PRE-CONSTRUCTION BRIEFING, PRIOR TO STARTING WORK. THE CONTACT AT TRAFFIC ENGINEERING IS CLAUDIA HENRY. (CLAUDIA.HENRY@PIERCECOUNTYWA.GOV, 253-433-0791).
2. PRIOR TO POURING ANY FOUNDATIONS (SIGNAL POLE, LIGHT POLE, SERVICE CABINET, ETC.) AND AFTER FORMING IS COMPLETE, CONTACT THE DEVELOPMENT ENGINEERING INSPECTOR AND TRAFFIC ENGINEERING FOR AN INSPECTION. THE CONTACT AT TRAFFIC ENGINEERING IS CLAUDIA HENRY AT THE ABOVE EMAIL ADDRESS/PHONE NUMBER. THREE DAYS NOTICE IS PREFERRED, DUE TO OTHER PROJECT COMMITMENTS. FOUNDATIONS POURED WITHOUT INSPECTION MAY BE REQUIRED TO BE REMOVED AND RE-POURED.
3. IT IS RECOMMENDED THAT NO FOUNDATIONS BE POURED UNTIL CURB IS INSTALLED.
4. WHEN ELECTRICAL WORK IS COMPLETE, CONTACT THE DEVELOPMENT ENGINEERING INSPECTOR AND TRAFFIC ENGINEERING FOR AN ELECTRICAL INSPECTION. THE CONTACT AT TRAFFIC ENGINEERING IS CLAUDIA HENRY AT THE ABOVE EMAIL ADDRESS/PHONE NUMBER
5. CONTRACTOR SHALL COORDINATE WITH OVERHEAD UTILITIES AS NEEDED. NO OVERHEAD LINES ARE ALLOWED TO BE IN FRONT OF OR TOUCHING LIGHT STANDARDS. PROPER CLEARANCE FROM POWER LINES AND NEUTRALS, IN ACCORDANCE WITH STATE LAW AND UTILITY COMPANY GUIDANCE, IS REQUIRED.

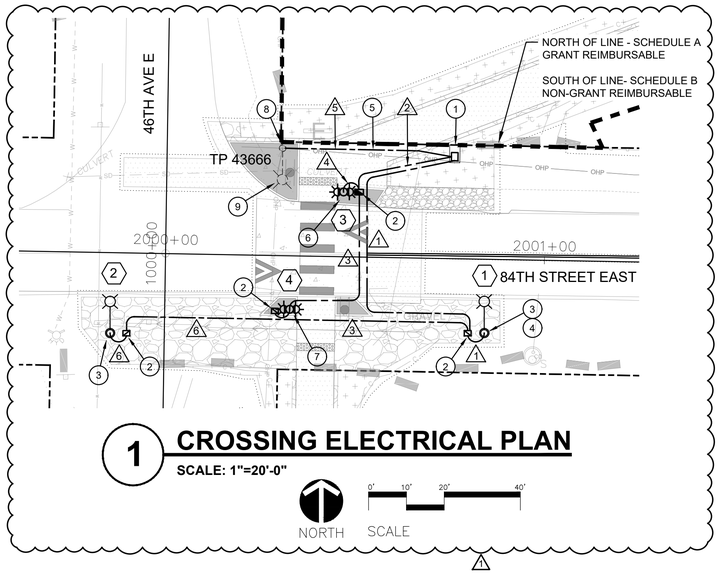

1 CROSSING ELECTRICAL PLAN

SCALE: 1"=20'-0"

NORTH SCALE 0' 10' 20' 40'

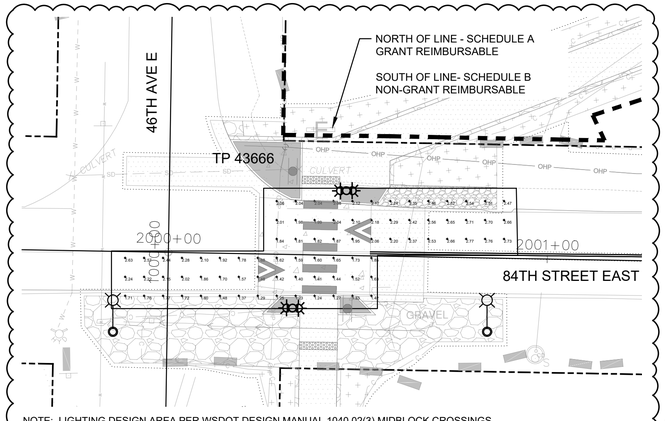

NOTE: LIGHTING DESIGN AREA PER WSDOT DESIGN MANUAL 1040.02(3) MIDBLOCK CROSSINGS.

2 CROSSING LIGHTING CALCULATIONS

SCALE: 1"=20'-0"

NORTH SCALE 0' 10' 20' 40'

TARGET VALUES

MINIMUM AVERAGE MAINTAINED HORIZONTAL LIGHT LEVEL (FC): 1.8 TO 2.4
MINIMUM LIGHT LEVEL (FC): 0.2
MAXIMUM UNIFORMITY AVG/MIN: 3:1

ACTUAL VALUES

CALCULCATION SUMMARY					
LABEL	CALC TYPE	UNITS	AVG	MIN	AVG/MIN
CROSSWALK	ILLUMINANCE	FC	1.99	1.23	1.62:1

NOTE: LIGHT LOSS FACTOR OF 0.85 USED IN CALCULATION

GENERAL NOTES

1. SEE PIERCE COUNTY STANDARD PLANS ON SHEETS E07, E08, E09 AND E10 FOR ADDITIONAL INFORMATION AND REQUIREMENTS.
2. REFERENCE PIERCE COUNTY SPECIAL PROVISIONS FOR ADDITIONAL INFORMATION AND REQUIREMENTS.

PLAN NOTES

1. PROVIDE SERVICE CABINET AND FOUNDATION. INSTALL SERVICE CABINET. CONDUCTORS FOR LUMINAIRES SHALL TERMINATE AT LIGHTING CIRCUIT A. CONDUCTORS FOR RRFB SHALL TERMINATE ON A SEPERATE SPST BREAKER, LABELED "RRFB". SEE PIERCE COUNTY DRAWINGS PC.J2.3, PC.J2.4 AND SPECIAL PROVISIONS FOR ADDITIONAL INFORMATION.
2. PROVIDE AND INSTALL JUNCTION BOX (REFER TO STD PLAN J-40.10-04 AND THE JUNCTION BOX AND CONDUIT PLACEMENT DETAIL ON SHEET E4) AT APPROXIMATE LOCATION SHOWN. LABEL JUNCTION BOX LIDS WITH SYSTEM IDENTIFICATION LETTERS "LT" FOR LIGHTBOXES AND "TS" FOR RRFB BOXES. TYPICAL. JUNCTION BOXES NOT INSTALLED IN SIDEWALK WILL REQUIRE A BASIC SECURITY COLLAR PER WSDOT J-40.01.00
3. PROVIDE AND INSTALL LIGHT STANDARD FOUNDATION, LIGHT STANDARD, BRACKET ARM, POLE AND BRACKET CABLE, SEC DISCONNECTS, GROUNDING AND LUMINAIRE IN ACCORDANCE WITH MANUFACTURERS RECOMMENDATIONS, SPECIAL PROVISIONS AND PIERCE COUNTY STANDARD DRAWINGS PC.J1.4 AND PC.J1.5. TYPICAL.
4. PROVIDE AND INSTALL PHOTOCELL ON LUMINAIRE. SEE SPECIAL PROVISIONS.
5. ROUTE CONDUIT AND SPECIFIED CONDUCTOR TO POLE MOUNT UTILITY TRANSFORMER IN ACCORDANCE WITH UTILITY COMPANY REQUIREMENTS. COORDINATE WITH UTILITY FOR EXACT LOCATION OF TRANSFORMER. CONTRACTOR SHALL PROVIDE ANY INCIDENTAL CONDUIT, FITTINGS AND JUNCTION BOXES AS REQUIRED BY THE SERVING UTILITY FOR SERVICE. ELECTRICAL UTILITY TO MAKE FINAL SERVICE CONNECTION.
6. INSTALL BI-DIRECTIONAL RECTANGULAR RAPID FLASHING BEACON (RRFB) SYSTEM (AC) WITH RRFB SYSTEM (AC) CONTROLLER CABINET IN ACCORDANCE WITH PIERCE COUNTY STANDARD DRAWING PC.J4.6. INSTALL POLE STANDARD AND FOUNDATION IN ACCORDANCE WITH PIERCE COUNTY STANDARD DRAWINGS PC.J1.8 AND PC.J4.2. INSTALL PEDESTRIAN PUSH BUTTON ASSEMBLY IN ACCORDANCE WITH PIERCE COUNTY STANDARD DRAWING PC.J4.7.
7. INSTALL BI-DIRECTIONAL RECTANGULAR RAPID FLASHING BEACON (RRFB) SYSTEM (AC) IN ACCORDANCE WITH PIERCE COUNTY STANDARD DRAWING PC.J4.6. INSTALL POLE STANDARD AND FOUNDATION IN ACCORDANCE WITH PIERCE COUNTY STANDARD DRAWINGS PC.J1.8 AND PC.J4.2. INSTALL PEDESTRIAN PUSH BUTTON ASSEMBLY IN ACCORDANCE WITH PIERCE COUNTY STANDARD DRAWING PC.J4.7.
8. PROVIDE POLE CONDUIT RISER PER TACOMA POWER ELECTRICAL CONSTRUCTION STANDARD C-UG-1200.
9. EXISTING UTILITY POLE WITH 100W LED COBRA HEAD STYLE LIGHT FIXTURE. COORDINATE WITH UTILITY TO DISCONNECT AND REMOVE FIXTURE BRACKET ARM AND LIGHT FIXTURE. THESE ITEMS SHALL BE RETURNED TO PIERCE COUNTY TRAFFIC OPERATIONS AT THE STOP FACILITY.

TRES WEST ENGINEERS, INC.
2702 SOUTH 42nd ST #301
TACOMA, WA 98409-7315
TEL (253) 472-3300
www.treswest.com

DESIGNED BY: DPH	SURVEYED BY:
DRAWN BY: DPH	DATE SURVEYED:
CHECKED BY: DPH	DATE PLOTTED: August 14, 2026

JAMES J. CHONG — STATE OF WASHINGTON — 53813 — REGISTERED PROFESSIONAL ENGINEER
8/14/2026

NO.	DATE	REVISION	BY	APPROVED
1	10/08/26	ADDENDUM 1		

Pierce County
Parks and Recreation Services
Lakewood Community Center
9112 Lakewood Drive SW
Lakewood, WA 98499
253.798.4081

BID SET

E05

ORANGEGATE PARK PHASE 1 IMPROVEMENTS

ELECTRICAL SITE PLAN

P-111031

Drawing: P:\PROJ2023\230502 ORANGEGATE PARK PHASE 1\DRAWINGS\01 WORKING DRAWINGS\230502_E05.DWG Layout Tab: 34X22
Xrefs: (DIESEL evaluation failed)
Date: 10/08/2026 Time: 11:46:20 AM Plotted by: DPH

REGION NO.	STATE	FEDERAL AID PROJECT NO.	SHEET NO.	TOTAL SHEETS
10	WA	N/A		

811 Know what's below. Call before you dig.

ELECTRICAL SCHEDULE FOR CIVIL EQUIPMENT

MECHANICAL UNIT NO.	VOLTS/PHASE	LOAD (HP/A/KW)	MOCP (A)	CONDUIT	WIRE	NOTES
SP-1	240/1	2.4 KW	20.0 A	1"	#12	1
SP-2	240/1	2.4 KW	20.0 A	1"	#12	1
SP-3	240/1	2.4 KW	20.0 A	1"	#12	1
SP-4	240/1	2.4 KW	20.0 A	1"	#12	1
PSP-1	240/1	4.08 KW	30.0 A	1"	#10	1
PSP-2	240/1	4.08 KW	30.0 A	1"	#10	1
PSP-3	240/1	4.08 KW	30.0 A	1"	#10	1
PSP-4	240/1	4.08 KW	30.0 A	1"	#10	1
PUMP STATION CONTROL PANEL	120/1	0.5 KW	20.0 A	1"	#12	
DRAIN FIELD CONTROL PANEL	120/1	0.5 KW	20.0 A	1"	#12	

GENERAL NOTES: REFER TO CIVIL PLANS FOR UNIT LOCATION AND PANEL SCHEDULES FOR PANEL AND CIRCUIT INFORMATION.

NOTES: 1) ELECTRICAL CONTRACTOR TO PROVIDE MOTOR-RATED SWITCH FOR DISCONNECT.

PANEL P1 — LOCATION: RESTROOM/MAINTENANCE BUILDING; SERVING: ; FED FROM: TACOMA POWER TRANSFORMER; 240/120 VOLT 1 PHASE 3 WIRE; 400 AMP BUS RATING; 400 AMP MAIN BREAKER; SCCR: 22,000 A; MOUNTING: SURFACE

CKT	LOAD DESCRIPTION	TYPE	KVA	A/P	PHASE	A/P	KVA	TYPE	LOAD DESCRIPTION	CKT
1	* LIGHTING - BUILDING INTERIOR	L	1.500	20/1	A	20/1	0.200	L	* LIGHTING - BUILDING EXTERIOR	2
3	* RECEPTACLES - BUILDING INTERIOR	R	1.440	20/1	B	20/1	0.360	R	RECEPTACLES - SHELTERS	4
5	* LENEL DOOR SECURITY	D	0.500	20/1	A	20/2	0.640	L	LIGHTING - PARKING LOT	6
7	* RECEPTACLE - TELECOM	R	0.360	20/1	B	-	-	-		8
9	* RECEPTACLE - EQUIPMENT CHARGIN	D	1.920	20/1	A	60/2	11.520	EV	EV CHARGING STATION	10
11	* RECEPTACLE - EQUIPMENT CHARGIN	D	1.920	20/1	B	-	-	-		12
13	* RECEPTACLE - EQUIPMENT CHARGIN	D	1.920	20/1	A	60/2	11.520	EV	EV CHARGING STATION	14
15	SPARE	S	-	20/1	B	-	-	-		16
17	SPARE	S	-	20/1	A	60/2	11.520	EV	EV CHARGING STATION - FUTURE	18
19	SPARE	S	-	20/1	B	-	-	-		20
21	SPARE	S	-	20/1	A	20/1	1.500	H	HEATED ENCLOSURE - SITE	22
23	SPARE	S	-	20/1	B	20/1	0.500	D	* IRRIGATION CONTROLLER	24
25	SPARE	S	-	20/1	A	20/1	0.500	D	* CCTV HEAD END - FUTURE	26
27	SPARE	S	-	20/1	B	20/1	-	S	SPARE	28
29	SPARE	S	-	20/1	A	20/1	-	S	SPARE	30

PHASE LOAD PHASE A= 25.64 KVA PHASE B= 22.18 KVA

LOAD TYPE	L	R	M	H	WH	EV	D	A	K	LM	TOTAL LOADS	
PANEL P2			28.32				2.00			4.08	30.32 KVA	126.33 AMP
CONN. LOAD	2.34	2.16	28.32	1.50		34.56	9.26			4.08	78.14 KVA	325.58 AMP
CALC. LOAD	2.93	2.16	28.32	1.50		43.20	9.26			1.02	88.39 KVA	368.27 AMP

REQUIRED OPTIONS: SERVICE-ENTRANCE RATED; FEED-THRU LUGS

NOTES: * CONDUIT, WIRING, DEVICES, COVERPLATES LABOR AND MATERIAL SUPPLIED BY BUILDING INSTALLER. (CONTRACTOR TO NOTE THAT THIS IS REFERENCING THAT THE ROMTEC DRAWINGS (APPENDIX B) SAY THAT THE CONTRACTOR/INSTALLER MUST PROVIDE THE ELECTRICAL. TO BE CLEAR, ALL ELECTRICAL, INCLUDING THE CIRCUITS WITHOUT THIS STAR NOTE, ARE BY CONTRACTOR.)

PANEL P2 — LOCATION: RESTROOM/MAINTENANCE BUILDING; SERVING: ; FED FROM: PANEL P1; 240/120 VOLT 1 PHASE 3 WIRE; 400 AMP MAIN LUGS ONLY; SCCR: 22,000 A; MOUNTING: SURFACE

CKT	LOAD DESCRIPTION	TYPE	KVA	A/P	PHASE	A/P	KVA	TYPE	LOAD DESCRIPTION	CKT
1	PUMP STATION ALARM	D	0.500	20/1	A	30/2	4.080	M	PUMP STATION PUMPS - 2.5 HP	2
3	PUMP STATION CONTROL PANEL	D	0.500	20/1	B	-	-	-	PSP-1	4
5	DRAIN FIELD CONTROL PANEL	D	0.500	20/1	A	30/2	4.080	M	PUMP STATION PUMPS - 2.5 HP	6
7	SEPTIC PUMP - 1-1/2 HP	M	2.400	20/2	B	-	-	-	PSP-2	8
9		-	-	-	A	30/2	4.080	M	PUMP STATION PUMPS - 2.5 HP	10
11	SEPTIC PUMP - 1-1/2 HP	M	2.400	20/2	B	-	-	-	PSP-3	12
13	SP-1	-	-	-	A	30/2	4.080	M	PUMP STATION PUMPS - 2.5 HP	14
15	SEPTIC PUMP - 1-1/2 HP	M	2.400	20/2	B	-	-	-	PSP-4	16
17	SP-2	-	-	-	A	20/1	-	S	SPARE	18
19	SEPTIC PUMP - 1-1/2 HP	M	2.400	20/2	B	20/1	-	S	SPARE	20
21	SP-3	-	-	-	A	20/1	-	S	SPARE	22
23	AGITATOR PUMP - 1-1/2 HP	M	2.400	20/2	B	20/1	-	S	SPARE	24
25	SP-4	-	-	-	A	20/1	-	S	SPARE	26
27	DRAIN FIELD ALARM	D	0.500	20/1	B	2-/1	-	S	SPARE	28
29	SPARE	S	-	20/1	A	20/1	-	S	SPARE	30

PHASE LOAD PHASE A= 15.16 KVA PHASE B= 15.16 KVA

LOAD TYPE	L	R	M	H	WH	EV	D	A	K	LM	TOTAL LOADS	
CONN. LOAD			28.32				2.00			4.08	30.32 KVA	126.33 AMP
CALC. LOAD			28.32				2.00			1.02	31.34 KVA	130.58 AMP

REQUIRED OPTIONS: FEED-THRU LUGS

NOTES:

CONTRACTOR SHALL INCLUDE IN BID THE ELECTRICAL WORK ASSOCIATED WITH POWERING (1) HAND DRYER IN EACH RESTROOM. BOD PRODUCT = XLERATOR XL SERIES HAND DRYER. INCLUDE ASSOCIATED ELECTRICAL WORK FROM PANEL TO POWER THESE HAND DRYERS INCLUDING BUT NOT LIMITED TO CONDUIT, WIRING, BOXES, CONNECTIONS, ETC.

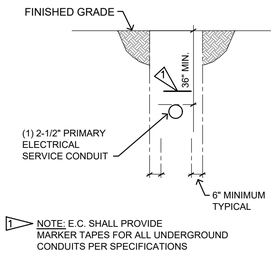

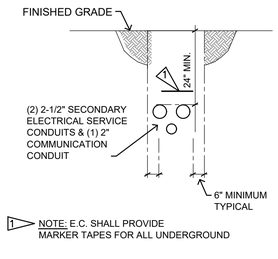

1 E05 UTILITY SERVICES TRENCH DETAIL

SCALE: NTS

NOTE:
SEE TACOMA POWER ELECTRICAL CONSTRUCTION STANDARD C-UG-1100 FOR ADDITIONAL INFORMATION AND REQUIREMENTS

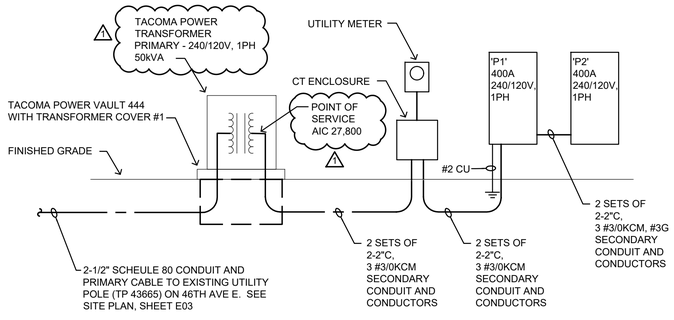

2 E05 ONE-LINE DIAGRAM

SCALE: NTS

NOTES:
ALL WIRING SHALL BE COPPER.
COORDINATE ALL REQUIREMENTS WITH TACOMA PUBLIC UTILITIES

ADDITIONAL TACOMA POWER REQUIREMENTS

CONTRACTOR SHALL PROOF PRIMARY CONDUIT USING A TACOMA POWER APPROVED MANDREL AFTER BACKFILL. THE CONDUIT IS TO BE FISHED AND SWABBED UPON COMPLETION OF THE INSTALLATION. PROVIDING SHALL THEN BE DEMONSTRATED WITH TACOMA POWERS AUTHORIZED T&D CONSTRUCTION INSPECTOR PRESENT. AFTER PROVIDING THAT THE CONDUIT IS FREE FROM OBSTRUCTION, THE CONTRACTOR SHALL LEAVE A 1/8-INCH DIAMETER POLYPROPYLENE FISH CORD IN THE CONDUIT.

CONTRACTOR SHALL PROVIDE LAND SURVEYOR OR LICENSED ENGINEER FOR ALL PROPERTY SURVEYS, INCLUDING SETTING AND MAINTAINING TEMPORARY WOODEN HUBS FOR LOT OR BUILDING SITE CORNERS AND ESTABLISHING AND MAINTAINING FINISHED ELEVATIONS ALONG TACOMA POWERS UNDERGROUND ELECTRICAL DISTRIBUTION SYSTEM TRENCH AND AT STRUCTURE LOCATIONS.

CONTRACTOR SHALL OBTAIN AN ELECTRICAL PERMIT FOR ANY SECONDARY WORK FROM TACOMA POWER ELECTRICAL INSPECTION OFFICE.

TRES WEST ENGINEERS, INC.
2702 SOUTH 42nd ST #301
TACOMA, WA 98409-7315
TEL (253) 472-3300
www.treswest.com

DESIGNED BY: DPH	SURVEYED BY:
DRAWN BY: DPH	DATE SURVEYED:
CHECKED BY: DPH	DATE PLOTTED: August 14, 2026

JAMES J. CHONG, STATE OF WASHINGTON, 53813, REGISTERED PROFESSIONAL ENGINEER
8/14/2026

NO.	DATE	REVISION	BY	APPROVED
1	10/08/26	ADDENDUM 1		

Pierce County
Parks and Recreation Services
Lakewood Community Center
9112 Lakewood Drive SW
Lakewood, WA 98499
253.798.4081

BID SET

E06

ORANGEGATE PARK
PHASE 1 IMPROVEMENTS

ELECTRICAL SCHEDULES, DETAILS AND DIAGRAMS

P-111031

Drawing: P:\PROJ2023\230502 ORANGEGATE PARK PHASE 1\DRAWINGS\01 WORKING DRAWINGS\230502_E06.DWG Layout Tab: 34X22
Xrefs: PC PARKS TITLEBLOCK.DWG / JJC WASH PE.DWG
Date: 10/08/2026 Time: 12:39:32 PM Plotted by: DPH

REGION NO.	STATE	FEDERAL AID PROJECT NO.	SHEET NO.	TOTAL SHEETS
10	WA	*N/A*		

MATCHLINE; SEE SHEET LD03

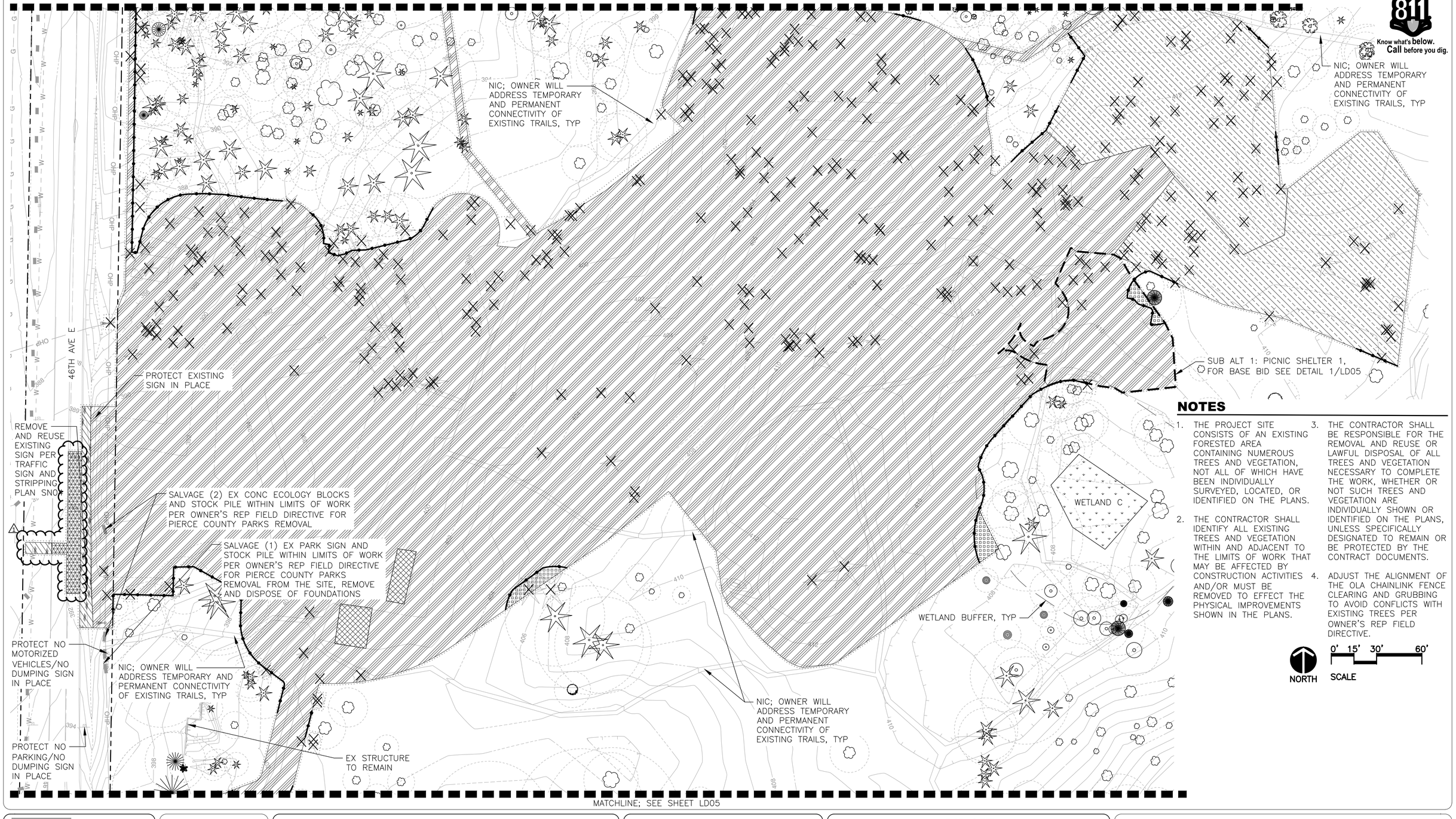

MATCHLINE; SEE SHEET LD05

811 Know what's below. Call before you dig.

NOTES

1. THE PROJECT SITE CONSISTS OF AN EXISTING FORESTED AREA CONTAINING NUMEROUS TREES AND VEGETATION, NOT ALL OF WHICH HAVE BEEN INDIVIDUALLY SURVEYED, LOCATED, OR IDENTIFIED ON THE PLANS.
2. THE CONTRACTOR SHALL IDENTIFY ALL EXISTING TREES AND VEGETATION WITHIN AND ADJACENT TO THE LIMITS OF WORK THAT MAY BE AFFECTED BY CONSTRUCTION ACTIVITIES AND/OR MUST BE REMOVED TO EFFECT THE PHYSICAL IMPROVEMENTS SHOWN IN THE PLANS.
3. THE CONTRACTOR SHALL BE RESPONSIBLE FOR THE REMOVAL AND REUSE OR LAWFUL DISPOSAL OF ALL TREES AND VEGETATION NECESSARY TO COMPLETE THE WORK, WHETHER OR NOT SUCH TREES AND VEGETATION ARE INDIVIDUALLY SHOWN OR IDENTIFIED ON THE PLANS, UNLESS SPECIFICALLY DESIGNATED TO REMAIN OR BE PROTECTED BY THE CONTRACT DOCUMENTS.
4. ADJUST THE ALIGNMENT OF THE OLA CHAINLINK FENCE CLEARING AND GRUBBING TO AVOID CONFLICTS WITH EXISTING TREES PER OWNER'S REP FIELD DIRECTIVE.

NORTH

0' 15' 30' 60'
SCALE

Drawing: P:\2022 PROJECTS\2022-33C ORANGEGATE PARK - PHASE 1 IMPROVEMENTS\GRAPHICS\AUTOCAD\L-DEMO-PLOT.DWG Layout Tab: LD04
Xrefs: Pc PARKS TITLEBLOCK.DWG / X-BASE.DWG / X-SITE-FURN.DWG / X-DEMO.DWG / TREE AND VEGETATION PROTECTION.DWG / ACAD-23014_BP_BY OTHERS_PIPELINE2-MODEL.DWG / X-SURVEY.DWG / RLE STAMP.DWG / 23014_BP_COMP TOPO.DWG / V19547-SRV.DWG
Date: 10/08/2026 Time: 03:25:26 PM Plotted by: CFOREST

HBB LANDSCAPE ARCHITECTURE

DESIGNED BY: *D. KOONTS*	*SURVEYED BY:*
DRAWN BY: *J. BAKKE*	*DATE SURVEYED:*
CHECKED BY: *J. VONG*	*DATE PLOTTED:* *October 8, 2026*

STATE OF WASHINGTON · MERIT OVIR · 10/09/2026 · NO. 1396 EXP. 03/2027 · LICENSED LANDSCAPE ARCHITECT

NO.	DATE	REVISION	BY	APPROVED
1	10/09/2026	ADDENDUM 1	JB	DWK

Pierce County
Parks and Recreation Services
Lakewood Community Center
9112 Lakewood Drive SW
Lakewood, WA 98499
253.798.4081

BID SET

LD04

ORANGEGATE PARK
PHASE 1 IMPROVEMENTS

DEMOLITION AND CLEARING PLANS

P-111031

REGION NO.	STATE	FEDERAL AID PROJECT NO.	SHEET NO.	TOTAL SHEETS
10	WA	*N/A*		

811 Know what's below. Call before you dig.

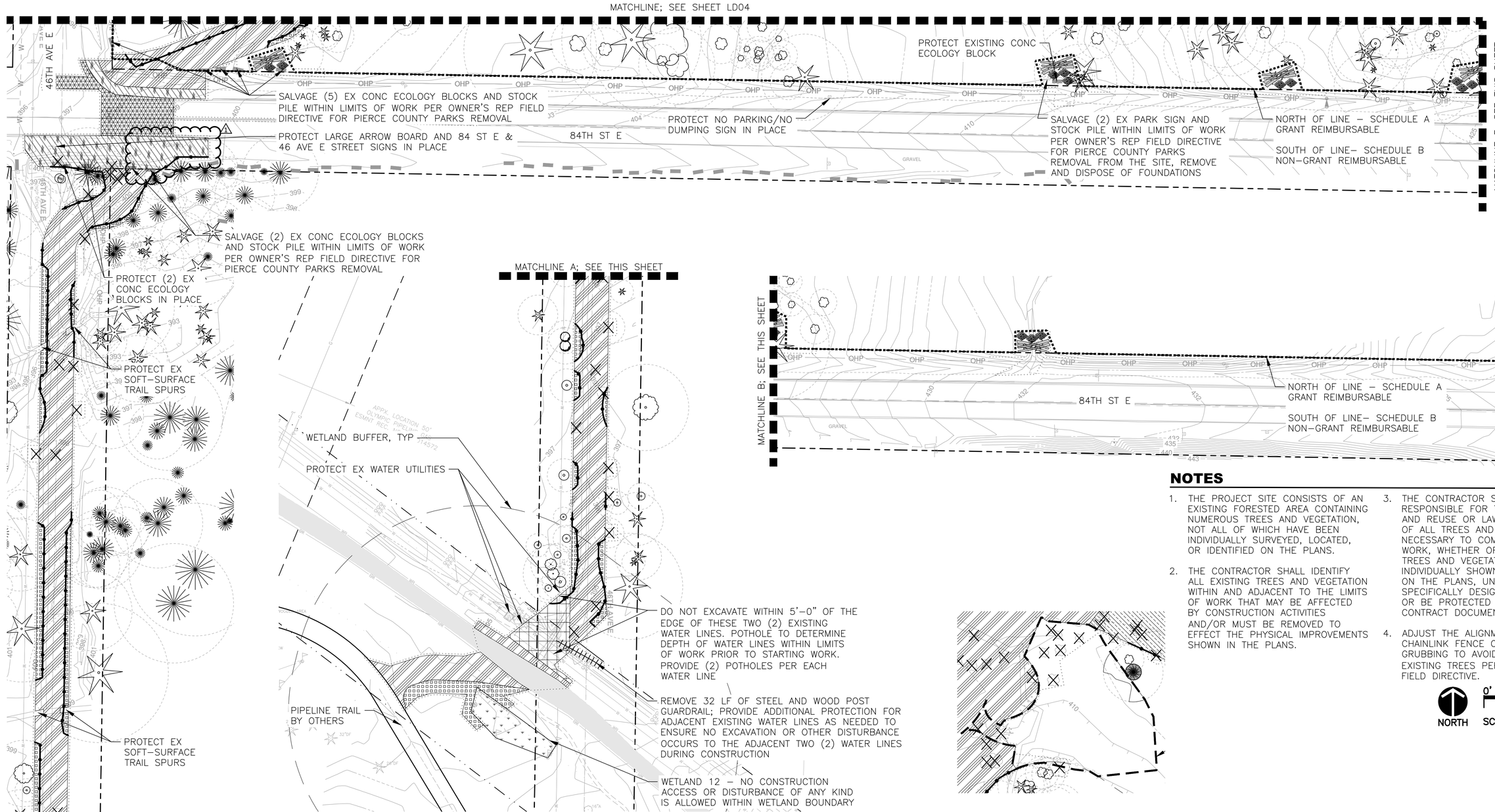

NOTES

1. THE PROJECT SITE CONSISTS OF AN EXISTING FORESTED AREA CONTAINING NUMEROUS TREES AND VEGETATION, NOT ALL OF WHICH HAVE BEEN INDIVIDUALLY SURVEYED, LOCATED, OR IDENTIFIED ON THE PLANS.
2. THE CONTRACTOR SHALL IDENTIFY ALL EXISTING TREES AND VEGETATION WITHIN AND ADJACENT TO THE LIMITS OF WORK THAT MAY BE AFFECTED BY CONSTRUCTION ACTIVITIES AND/OR MUST BE REMOVED TO EFFECT THE PHYSICAL IMPROVEMENTS SHOWN IN THE PLANS.
3. THE CONTRACTOR SHALL BE RESPONSIBLE FOR THE REMOVAL AND REUSE OR LAWFUL DISPOSAL OF ALL TREES AND VEGETATION NECESSARY TO COMPLETE THE WORK, WHETHER OR NOT SUCH TREES AND VEGETATION ARE INDIVIDUALLY SHOWN OR IDENTIFIED ON THE PLANS, UNLESS SPECIFICALLY DESIGNATED TO REMAIN OR BE PROTECTED BY THE CONTRACT DOCUMENTS.
4. ADJUST THE ALIGNMENT OF THE OLA CHAINLINK FENCE CLEARING AND GRUBBING TO AVOID CONFLICTS WITH EXISTING TREES PER OWNER'S REP FIELD DIRECTIVE.

NORTH

SCALE 0' 15' 30' 60'

1 PICNIC SHELTER 1 AREA: BASE BID

SCALE: 1"=30'-0"

HBB LANDSCAPE ARCHITECTURE	
DESIGNED BY: D. KOONTS	*SURVEYED BY:*
DRAWN BY: J. BAKKE	*DATE SURVEYED:*
CHECKED BY: J. VONG	*DATE PLOTTED:* October 8, 2026

STATE OF WASHINGTON · MERIT OVIR · 10/09/2026 · NO. 1396 EXP. 03/2027 · LICENSED LANDSCAPE ARCHITECT

NO.	DATE	REVISION	BY	APPROVED
1	10/09/2026	ADDENDUM 1	JB	DWK

Pierce County
Parks and Recreation Services
Lakewood Community Center
9112 Lakewood Drive SW
Lakewood, WA 98499
253.798.4081

BID SET

LD05

ORANGEGATE PARK
PHASE 1 IMPROVEMENTS

DEMOLITION AND CLEARING PLANS

P-111031

Drawing: P:\2022 PROJECTS\2022-33C ORANGEGATE PARK - PHASE 1 IMPROVEMENTS\GRAPHICS\AUTOCAD\L-DEMO-PLOT.DWG Layout Tab: LD05
Xrefs: PC PARKS TITLEBLOCK.DWG / X-BASE.DWG / X-SITE-FURN.DWG / X-DEMO.DWG / TREE AND VEGETATION PROTECTION.DWG / ACAD-23014_BP_BY OTHERS_PIPELINE2-MODEL.DWG / X-SURVEY.DWG / RLE STAMP.DWG / 23014_BP_COMP TOPO.DWG / V19547-SRV.DWG
Date: 10/08/2026 Time: 03:25:31 PM Plotted by: CFOREST

REGION NO.	STATE	FEDERAL AID PROJECT NO.	SHEET NO.	TOTAL SHEETS
10	WA	*N/A*		

SITE DESIGN SCHEDULE A - GRANT REIMBURSABLE

SYM	QTY	ITEM	REMARKS	DETAILS
	698 SF	CHIPPED ROCK TRAIL		2 / LS19
		THICKENED CONCRETE AREA	AREA IS SHOWING THE LIMITS OF THICKENED CONCRETE; DIMENSION LIMITS ARE DEFINED IN SITE FURNISHING DETAILS	
	5,470 SF	PLAY AREA SURFACING – TEAL	POURED–IN–PLACE RUBBERIZED SURFACING	1 / LS17
	1,430 SF	PLAY AREA SURFACING – SKY BLUE	POURED–IN–PLACE RUBBERIZED SURFACING	1 / LS17
T R	5/4	TRASH/RECYCLE RECEPTACLE		1 / LS14
	4	BIKE RACK		2 / LS15
	6	PICNIC TABLE A		1 / LS15
	6	ACCESSIBLE PICNIC TABLE A		1 / LS15
	2	PICNIC TABLE B		1 / LS16
	2	ACCESSIBLE PICNIC TABLE B		2 / LS16
	8	BENCH		3 / LS16
	9	REMOVABLE BOLLARD		3 / LS14
	6	BOLLARD RECEIVER		3 / LS14
x x	2,100 LF	OLA CHAINLINK FENCE AND GATE	ALIGNMENT TO BE LOCATED PER OWNER'S REP FIELD DIRECTIVE TO AVOID CONFLICTS WITH EXISTING TREES	1 / LS12
	494 LF	SPLIT RAIL FENCE		2 / LS12
	1	VEHICULAR ACCESS GATE		1 / LS13
	2	AMENITY INFO. & RULES SIGN – OFF–LEASH AREA RULES FENCE MOUNT	LOCATION AND MOUNT DIRECTLY ON FENCE PER OWNER'S REP FIELD DIRECTIVE, SEE APPENDIX D ATHLETIC FIELDS RULES PANEL FOR PANEL DIMENSIONS AND MOUNTING	2 / LS14
NO SYM	12	DOG MITT STATION	LOCATE PER OWNER'S REP FIELD DIRECTION	
E	1	VEHICULAR PARK ENTRY SIGN	SEE APPENDIX D	
	2	PARK INFO & RULES SIGN	SEE APPENDIX D; INSTALL TOP OF FOOTINGS FLUSH WITH TOP OF ADJACENT CONCRETE	
	1	AMENITY INFO. & RULES SIGN – PLAYGROUND RULES	SEE APPENDIX D; INSTALL TOP OF FOOTINGS FLUSH WITH TOP OF ADJACENT CONCRETE	
PW	1	PLAYGROUND WELCOME SIGN	SEE APPENDIX D; "WELCOME! AGES 2–12"	
	2	TRAIL DIRECTIONAL SIGN	SEE APPENDIX D	
	2	TRAIL ENTRY – LARGE SIGN	SEE APPENDIX D	
	2	AMENITY INFO. & RULES SIGN – PARK SHELTER RULES	SEE APPENDIX D, MOUNT ON POST PER OWNER'S REP FIELD DIRECTIVE	
3	17	LANDSCAPE BOULDER–3		
4	17	LANDSCAPE BOULDER–4		
5	12	LANDSCAPE BOULDER–5		
6	8	LANDSCAPE BOULDER–6		
7	2	LANDSCAPE BOULDER–7		
8	2	LANDSCAPE BOULDER–8		

SITE DESIGN SCHEDULE B - NON-GRANT REIMBURSABLE

SYM	QTY	ITEM	REMARKS	DETAILS
	263 SF	COBBLE ROCK PAVING	LOCATED AT THE 84TH PEDESTRIAN CROSSING	4 / LS11
	1	TRAIL DIRECTIONAL SIGN	SEE APPENDIX D	
LPI	1	LOW PROFILE INFORMATIONAL SIGN	SEE APPENDIX D	
G	2	GENERAL SIGN – PEDESTRIAN SCALE	SEE APPENDIX D	
E	1	TRAIL ENTRY – LARGE SIGN	SEE APPENDIX D	
	2	TRAIL COUNTER	SEE APPENDIX D	
C	1	CAR COUNTER	SEE APPENDIX D	
	335 LF	SPLIT RAIL FENCE		2 / LS12, 2 / LS19, 2 / LS19, 2 / LS12
NO SYM	15	ADD ALT 5: TRAIL DIRECTIONAL SIGN	SUPPLY ONLY, OWNER TO INSTALL, SEE APPENDIX D	
NO SYM	4	ADD ALT 6: TRAIL ENTRY – LARGE SIGN	SUPPLY ONLY, OWNER TO INSTALL, SEE APPENDIX D	

SITE DESIGN LEGEND

SYM	ITEM	REMARKS	DETAILS
	CONCRETE PAVING	SEE PAVING DWGS	
	CONCRETE SCORE JOINT	TOOLED JOINT	1 / LS11
	CONCRETE EXPANSION JOINT		2 / LS11
	CONCRETE FINISH – MEDIUM BROOM		3 / LS11
	CRUSHED SURFACING TOP COURSE OR GRAVEL SHOULDER	SEE PAVING DWGS	
	COBBLE DRAINAGE STRIP OR SWALE AREA	SEE STORM DRAINAGE DWGS	
	PLANTING AREAS	SEE PLANTING DWGS	
	BOARDWALK		
	BARRIER LOGS	SEE PLANTING DWGS	
X / XX	DETAIL IDENTIFICATION / DETAIL SHEET IDENTIFICATION		
	PROPERTY LINE		
	LIMITS OF WORK		
	EXISTING TREE TO REMAIN		

3 / LS17

Know what's below. Call before you dig.

NOTES

1. ANY DISCREPANCIES WITH THE DWG AND/OR SPECS AND SITE CONDITIONS SHALL BE BROUGHT TO THE ATTENTION OF THE OWNER'S REP PRIOR TO PROCEEDING WITH CONSTRUCTION.
2. INSTALL ALL CURVED LINES WITH CONTINUOUS RADII. TANGENT LINES WILL NOT BE ACCEPTED.
3. SEE APPENDIX E FOR MANUFACTURER'S FOOTINGS FOR PLAYGROUND EQUIPMENT.
4. ALL DIMENSIONS ARE TAKEN AT 90 DEGREE ANGLES TO FACE OF CURB OR WALL, TO CENTER OF POST FOR PLAY EQUIPMENT, TO CENTER OF SIGN PANEL, AND TO EDGE OR CENTER OF OTHER SITE FURNISHINGS UNLESS OTHERWISE NOTED.
5. SCALE OF SYMBOLS AND HATCHES MAY VARY ON PLANS.

COORDINATE CHART FOR LS08

PT	EASTING/NORTHING	DESCRIPTION
1	1176498.13, 679559.17	CENTER OF WE GO ROUND FOOTING
2	1176494.00, 679531.04	CENTER OF SWING SET FOOTING
3	1176517.83, 679505.17	CENTER OF SWING SET FOOTING
4	1176541.78, 679500.55	CENTER OF WE SAW FOOTING
5	1176549.84, 679500.89	CENTER OF WE SAW FOOTING
6	1176566.20, 679569.42	CENTER OF ROLLER SLIDE FOOTING
7	1176575.71, 679575.98	CENTER OF ROLLER SLIDE FOOTING
8	1176609.00, 679541.30	CENTER OF OODLE SWING FOOTING
9	1176622.76, 679542.31	CENTER OF OODLE SWING FOOTING
10	1176608.62, 679581.84	CENTER OF FORMA ALPINE SLIDE FOOTING
11	1176617.03, 679572.44	CENTER OF FORMA ALPINE SLIDE FOOTING
12	1176605.91, 679630.96	SOUTH CORNER OF LOG CRAWL TUNNEL
13	1176604.84, 679636.46	NORTH CORNER OF LOG CRAWL TUNNEL
14	1176589.60, 679604.28	CENTER OF OMNISPIN FOOTING
15	1176627.93, 679646.06	CENTER OF SYMBOL COMMUNICATION SIGN FOOTING
16	1176630.81, 679644.08	CENTER OF SYMBOL COMMUNICATION SIGN FOOTING
25	1176567.25, 679584.29	END OF PLAY ROPE
26	1176583.36, 679570.73	END OF PLAY ROPE
27	1176570.32, 679564.65	END OF PLAY ROPE
28	1176563.48, 679570.41	END OF PLAY ROPE
29	1176485.47, 679546.52	CORNER OF PICNIC TABLE
30	1176484.88, 679542.07	CORNER OF PICNIC TABLE
31	1176527.00, 679493.39	CORNER OF PICNIC TABLE
32	1176526.41, 679489.01	CORNER OF PICNIC TABLE

COORDINATE CHART FOR LS07

PT	EASTING/NORTHING	DESCRIPTION
17	1176498.13, 679559.17	CENTER OF PLAY AREA SURFACING – COLOR 1
18	1176506.67, 679518.67	CENTER OF PLAY AREA SURFACING – COLOR 1
19	1176546.03, 679501.32	CENTER OF PLAY AREA SURFACING – COLOR 1
20	1176615.87, 679541.77	CENTER OF PLAY AREA SURFACING – COLOR 1
21	1176615.24, 679582.27	CENTER OF PLAY AREA SURFACING – COLOR 1
22	1176587.97, 679602.35	CENTER OF PLAY AREA SURFACING – COLOR 1
23	1176598.42, 679625.04	CENTER OF PLAY AREA SURFACING – COLOR 1
24	1176613.31, 679635.95	CENTER OF PLAY AREA SURFACING – COLOR 1

HBB LANDSCAPE ARCHITECTURE

DESIGNED BY: D. KOONTS	SURVEYED BY:
DRAWN BY: J. BAKKE	DATE SURVEYED:
CHECKED BY: J. VONG	DATE PLOTTED: October 8, 2026

STATE OF WASHINGTON · MERIT OVIR · 10/09/2026 · NO. 1396 EXP. 03/2027 · LICENSED LANDSCAPE ARCHITECT

NO.	DATE	REVISION	BY	APPROVED
1	10/09/2026	ADDENDUM 1	JB	DWK

Pierce County
Parks and Recreation Services
Lakewood Community Center
9112 Lakewood Drive SW
Lakewood, WA 98499
253.798.4081

BID SET

LS01

ORANGEGATE PARK
PHASE 1 IMPROVEMENTS

SITE DESIGN SCHEDULE, LEGEND, NOTES & ABBV

P-111031

Drawing: P:\2022 PROJECTS\2022-33C ORANGEGATE PARK - PHASE 1 IMPROVEMENTS\GRAPHICS\AUTOCAD\L-SITE-PLOT.DWG Layout Tab: LS01
Xrefs: (DIESEL evaluation failed)
Date: 10/08/2026 Time: 03:25:34 PM Plotted by: CFOREST

REGION NO.	STATE	FEDERAL AID PROJECT NO.	SHEET NO.	TOTAL SHEETS
10	WA	N/A		

811 Know what's below. Call before you dig.

MATCHLINE; SEE SHEET LS03

N: 679825.05
E: 1176507.56

DOG PARK SOUTH ENTRY ENLARGEMENT (1/LS10)

N: 679847.85
E: 1176552.46

N: 679826.62
E: 1176672.17

1/LS06 HARDSCAPE FINISHES ENLARGEMENT

RESERVE DRAIN FIELD, SEE SEPTIC DWGS

PRIMARY DRAIN FIELD, TYP; SEE SEPTIC DWGS

1/LS05 SITE FURNISHINGS ENLARGEMENT

SEPTIC TANK AREA, SEE SEPTIC DWGS

RESERVE DRAIN FIELD, SEE SEPTIC DWGS

STORMWATER POND, TYP; SEE DRAINAGE DWGS

N: 679763.93
E: 1176303.25

CONNECTION TO FUTURE TRAIL BEYOND LIMITS SHOWN BY PC PARKS

ROCKERY START, SEE DWG CG04

RESTROOM/MAINTENANCE BUILDING, SEE APPENDIX B

N: 679701.84
E: 1176353.56

CONCRETE PEDESTRIAN WALKWAY, TYP; SEE PAVING DWGS

PICNIC SHELTER 1, SEE APPENDIX C

SUB ALT 1: PICNIC SHELTER 1, FOR BASE BID SEE DETAIL 1/LS04

5/LS11 ROCKERY WALL ELEVATION

1/LS07 HARDSCAPE FINISHES ENLARGEMENT

ROCKERY END, SEE DWG CG04

CONNECTION TO FUTURE TRAIL BEYOND TRAIL LIMITS SHOWN BY PIERCE COUNTY PARKS

2/LS09 ACCESS GATE ENLARGEMENT

WETLAND C

CONNECTION TO FUTURE TRAIL BEYOND TRAIL LIMITS SHOWN BY PIERCE COUNTY PARKS

1/LS08 SITE FURNISHINGS ENLARGEMENT

CAR COUNTER; UNDER SCHEDULE B – NON–GRANT REIMBURSABLE; LOCATE AND ORIENT PER OWNER'S REP FIELD DIRECTIVE; MIN 2' CLR TO EDGE OF PAVING

PICNIC SHELTER 2, SEE APPENDIX C

WETLAND BUFFER, TYP

GRAVEL SHOULDER, TYP; SEE PAVING DWGS

ASPHALT WALKING PATH, TYP; SEE PAVING DWGS

TRAIL COUNTER; UNDER SCHEDULE B – NON–GRANT REIMBURSABLE; LOCATE AND ORIENT PER OWNER'S REP FIELD DIRECTIVE; MIN 2' CLR TO EDGE OF PAVING

MATCHLINE; SEE SHEET LS05

1 PICNIC SHELTER 1 AREA: BASE BID

SCALE: 1"=30'-0"

NORTH

0' 15' 30' 60'
SCALE

Drawing: P:\2022 PROJECTS\2022-33C ORANGEGATE PARK - PHASE 1 IMPROVEMENTS\GRAPHICS\AUTOCAD\L-SITE-PLOT.DWG Layout Tab: LS04
Xrefs: (DIESEL evaluation failed)
Date: 10/08/2026 Time: 05:50:27 PM Plotted by: JBAKKE

HBB LANDSCAPE ARCHITECTURE

DESIGNED BY: D. KOONTS	SURVEYED BY:
DRAWN BY: J. BAKKE	DATE SURVEYED:
CHECKED BY: J. VONG	DATE PLOTTED: October 8, 2026

STATE OF WASHINGTON · MERIT OVIR · 10/09/2026 · NO. 936 EXP. 03/2027 · LICENSED LANDSCAPE ARCHITECT

NO.	DATE	REVISION	BY	APPROVED
1	10/09/2026	ADDENDUM 1	JB	DWK

Pierce County
Parks and Recreation Services
Lakewood Community Center
9112 Lakewood Drive SW
Lakewood, WA 98499
253.798.4081

BID SET

LS04

ORANGEGATE PARK
PHASE 1 IMPROVEMENTS

SITE DESIGN PLAN

P-111031

REGION NO.	STATE	FEDERAL AID PROJECT NO.	SHEET NO.	TOTAL SHEETS
10	WA	N/A		

811 Know what's below. Call before you dig.

TRAIL ENTRY – LARGE SIGN 3'–0" OFFSET FROM EDGE OF PAVING

GENERAL SIGN – PEDESTRIAN SCALE; LOCATE AND ORIENT PER OWNER'S REP FIELD DIRECTION

MATCHLINE; SEE SHEET LS04

46TH AVE E

ALL SPLIT RAIL FENCE ADJACENT TO 84TH ST E, TYP: ADD ALT 4: SPLIT RAIL FENCE

OFFSET SPLIT RAIL FENCE 3'–6" FROM THE CENTER OF THE POWER POLES, TYP

CRUSHED SURFACING, TYP; SEE PAVING DWGS

84TH ST E

50'–0" LENGTH OF FENCE CENTERED ON EX TRAIL ENTRANCE OR LOCATED PER OWNER'S REP FIELD DIRECTIVE, TYP

NORTH OF LINE – SCHEDULE A GRANT REIMBURSABLE, UNLESS OTHERWISE NOTED

SOUTH OF LINE– SCHEDULE B NON–GRANT REIMBURSABLE

MATCHLINE B; SEE THIS SHEET

TRAIL ENTRY – LARGE SIGN; LOCATE AND ORIENT PER OWNER'S REP FIELD DIRECTION

GENERAL SIGN – PEDESTRIAN SCALE; LOCATE AND ORIENT PER OWNER'S REP FIELD DIRECTION

ASPHALT WALKING PATH, TYP; SEE PAVING DWGS

MATCHLINE A; SEE THIS SHEET

ASPHALT WALKING PATH, TYP; SEE PAVING DWGS

MIN 5'–0" CLR FROM EX WATER LINE

PROTECT EX WATER UTILITIES

WETLAND BUFFER, TYP

LOW PROFILE INFORMATIONAL SIGN; LOCATE AND ORIENT PER OWNER'S REP FIELD DIRECTIVE; MIN 2' CLR TO EDGE OF PATH

PIPELINE TRAIL BY OTHERS

WETLAND 12

EX GRAVEL MAINTENANCE ACCESS ROAD

MATCHLINE A; SEE THIS SHEET

MATCHLINE B; SEE THIS SHEET

ALL SPLIT RAIL FENCE ADJACENT TO 84TH ST E, TYP: ADD ALT 4: SPLIT RAIL FENCE

50TH AVE E

84TH ST E

NORTH OF LINE – SCHEDULE A GRANT REIMBURSABLE, UNLESS OTHERWISE NOTED

SOUTH OF LINE– SCHEDULE B NON–GRANT REIMBURSABLE

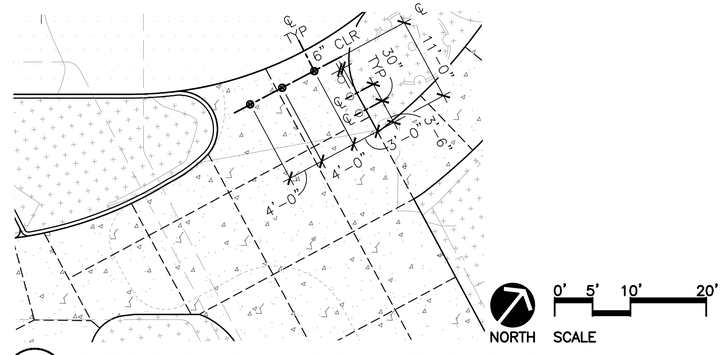

1 **SITE FURNISHINGS ENLARGEMENT**
SCALE: 1"=10'-0"

HBB LANDSCAPE ARCHITECTURE

DESIGNED BY: D. KOONTS	SURVEYED BY:
DRAWN BY: J. BAKKE	DATE SURVEYED:
CHECKED BY: J. VONG	DATE PLOTTED: October 8, 2026

STATE OF WASHINGTON · MERIT OVIR · 10/09/2026 · NO. 1396 EXP. 03/2027 · LICENSED LANDSCAPE ARCHITECT

NO.	DATE	REVISION	BY	APPROVED
1	10/09/2026	ADDENDUM 1	JB	DWK

Pierce County
Parks and Recreation Services
Lakewood Community Center
9112 Lakewood Drive SW
Lakewood, WA 98499
253.798.4081

BID SET

LS05

ORANGEGATE PARK
PHASE 1 IMPROVEMENTS

SITE DESIGN PLAN

P-111031

Drawing: P:\2022 PROJECTS\2022-33C ORANGEGATE PARK - PHASE 1 IMPROVEMENTS\GRAPHICS\AUTOCAD\L-SITE-PLOT.DWG Layout Tab: LS05
Xrefs: (DIESEL evaluation failed)
Date: 10/08/2026 Time: 03:25:51 PM Plotted by: CFOREST

NOTE

1. SEE SHEET LS01 FOR NORTHINGS AND EASTINGS COORDINATE CHART.
2. SEE CG06 AND CG07 FOR HORIZONTAL CONTROL OF PEDESTRIAN PAVING AND BOARDWALKS AROUND PLAYGROUND AREA.

REGION NO.	STATE	FEDERAL AID PROJECT NO.	SHEET NO.	TOTAL SHEETS
10	WA	*N/A*		

Know what's below. Call before you dig.

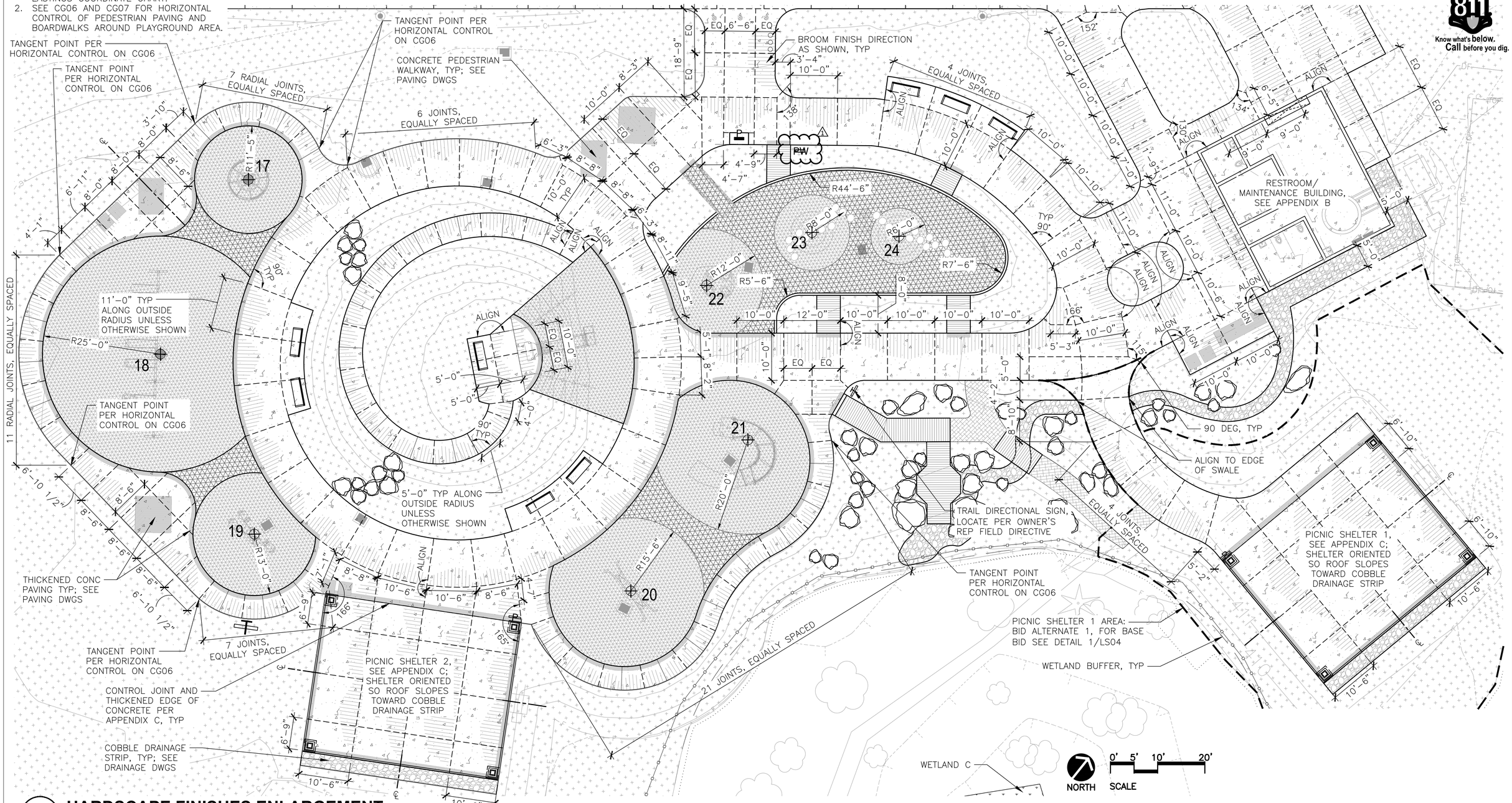

1 HARDSCAPE FINISHES ENLARGEMENT

SCALE: 1"=10'-0"

Drawing: P:\2022 PROJECTS\2022-33C ORANGEGATE PARK - PHASE 1 IMPROVEMENTS\GRAPHICS\AUTOCAD\L-SITE-PLOT.DWG Layout Tab: LS07
Xrefs: (DIESEL evaluation failed)
Date: 10/08/2026 Time: 03:25:56 PM Plotted by: CFOREST

HBB LANDSCAPE ARCHITECTURE

DESIGNED BY: D. KOONTS	SURVEYED BY:
DRAWN BY: J. BAKKE	DATE SURVEYED:
CHECKED BY: J. VONG	DATE PLOTTED: October 8, 2026

STATE OF WASHINGTON · MERIT OVIIR · 10/09/2026 · NO. 1386 EXP. 03/2027 · LICENSED LANDSCAPE ARCHITECT

NO.	DATE	REVISION	BY	APPROVED
1	10/09/2026	ADDENDUM 1	JB	DWK

Pierce County
Parks and Recreation Services
Lakewood Community Center
9112 Lakewood Drive SW
Lakewood, WA 98499
253.798.4081

BID SET

LS07

ORANGEGATE PARK
PHASE 1 IMPROVEMENTS

SITE DESIGN ENLARGEMENT

P-111031

REGION NO.	STATE	FEDERAL AID PROJECT NO.	SHEET NO.	TOTAL SHEETS
10	WA	N/A		

811 Know what's below. Call before you dig.

NOTE:
1. ALL COMPONENTS TO BE BLACK VINYL COATED.
2. POSTS TO BE PLUMB, RAILS TO BE PARALLEL TO FINISH GRADE

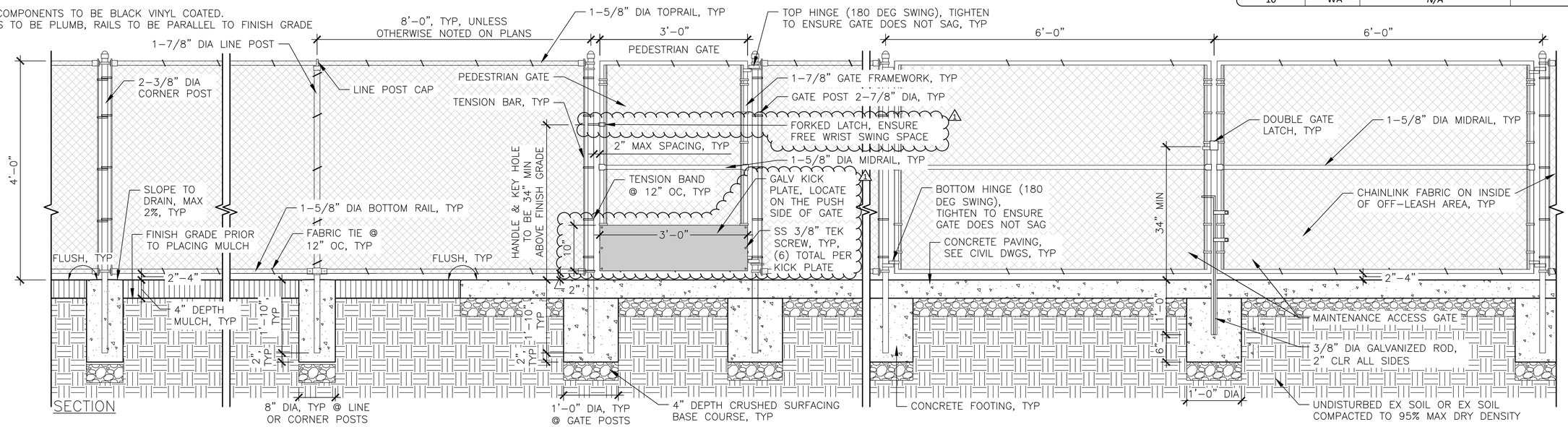

1 OLA CHAINLINK FENCE & GATE

SCALE: 1"=1'-0"

NOTE:
1. INSTALL POSTS PLUMB & RAILS PARALLEL TO FINISH GRADE.

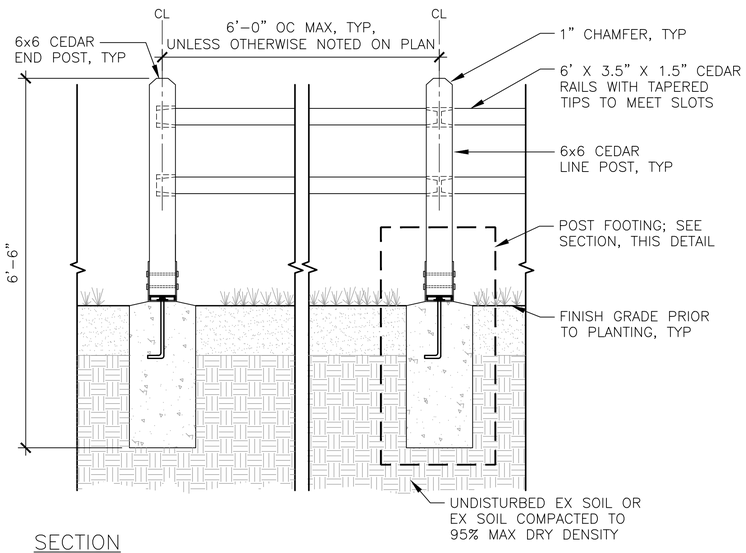

SECTION

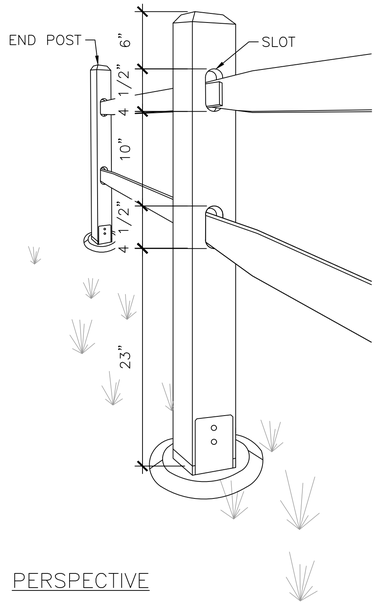

PERSPECTIVE

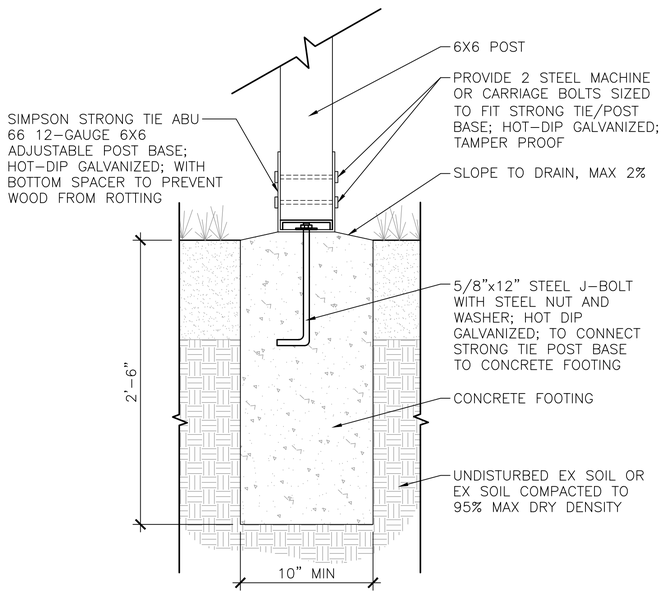

SECTION – POST FOOTING

2 SPLIT RAIL FENCE

SCALE: 3/4"=1'-0"(ELEVATION), 1-1/2"=1'-0" (SECTION)

Drawing: P:\2022 PROJECTS\2022-33C ORANGEGATE PARK - PHASE 1 IMPROVEMENTS\GRAPHICS\AUTOCAD\L-SITE DETAILS-PLOT.DWG Layout Tab: LS12
Xrefs: (DIESEL evaluation failed)
Date: 10/08/2026 Time: 05:01:15 PM Plotted by: JBAKKE

HBB LANDSCAPE ARCHITECTURE

DESIGNED BY: D. KOONTS	SURVEYED BY:
DRAWN BY: J. BAKKE	DATE SURVEYED:
CHECKED BY: J. VONG	DATE PLOTTED: October 8, 2026

STATE OF WASHINGTON · MERIT OVIIR · 10/09/2026 · NO. 1386 EXP. 03/2027 · LICENSED LANDSCAPE ARCHITECT

NO.	DATE	REVISION	BY	APPROVED
1	10/09/2026	ADDENDUM 1	JB	DWK

Pierce County
Parks and Recreation Services
Lakewood Community Center
9112 Lakewood Drive SW
Lakewood, WA 98499
253.798.4081

BID SET

LS12

ORANGEGATE PARK
PHASE 1 IMPROVEMENTS

SITE DESIGN DETAILS

P-111031

REGION NO.	STATE	FEDERAL AID PROJECT NO.	SHEET NO.	TOTAL SHEETS
10	WA	*N/A*		

PLANTING SCHEDULE A - GRANT REIMBURSABLE

SYM	QTY	SCIENTIFIC/COMMON NAME	SIZE	REMARKS	DETAILS
		RESTORATION PLANTING			
		SEEDLING TREES			
	72	Prunus emarginata / BITTER CHERRY	SEEDLINGS PLUGS (DNR STOCK TYPE: P+1, 1+1, AND/OR 2+2 ARE ACCEPTABLE)	TRIANGULAR SPACING @ 12' OC; BAREROOT IS NOT ACCEPTABLE	3 LP13; 2 LP11
	48	Frangula purshiana / CASCARA BUCKTHORN			
	48	Pinus strobus / WHITE PINE			
		SHRUB			
	88	Symphoricarpus alba / SNOWBERRY	MIN #1 CONT	FULL, WELL BRANCHED & WELL ROOTED; TRIANGULAR SPACING @ 6' OC	2 LP13; 1 LP13
	88	Mahonia aquifolium / TALL OREGON GRAPE			
	88	Vaccinium ovatum / EVERGREEN HUCKLEBERRY			
	88	Ribes sanguineum / RED FLOWERING CURRANT			
		GROUNDCOVERS			
	475	Gaultheria shallon/ SALAL	MIN #1 CONT	FULL & WELL ROOTED; TRIANGULAR SPACING @ 3' OC	
	475	Mahonia nervosa / DWARF OREGON GRAPE			
	475	Polystichum munitum/ SWORD FERN		FULL & WELL ROOTED; MIN 3 GREEN FRONDS; TRIANGULAR SPACING @ 3' OC	2 LP11
	2,911 SF	MULCH AND SOIL PREP ONLY	4" DEPTH		
		SHRUB			
NO SYM	30	Rhododendron occidental/ WESTERN AZALEA	MIN #2 CONT	NO SOIL PREPARATION; FULL, WELL BRANCHED & WELL ROOTED; OWNER'S REP TO LOCATE IN FIELD WITHIN LIMITS OF WORK	2 LP13; 1 LP13
		SEEDLING TREES			
NO SYM	50	Prunus emarginata / BITTER CHERRY	SEEDLING PLUGS (DNR STOCK TYPE: P+1, 1+1, AND/OR 2+2 ARE ACCEPTABLE)	NO SOIL PREPARATION; OWNER'S REP TO LOCATE IN FIELD WITHIN WETLAND C BUFFER LIMITS; BAREROOT IS NOT ACCEPTABLE; SEE NOTE 5 FOR MIN SETBACKS	3 LP13
	50	Frangula purshiana / CASCARA BUCKTHORN			
	50	Pinus strobus / WHITE PINE			
	7	HABITAT LOGS		USE SALVAGED BRANCHES AND GRUBBED ROOTS & STUMPS AS BRUSH PILES TO BLOCK OFF TRAIL ACCESS, SEE DEMO DWGS	4 LP13
	19	BRUSH PILES			
	5 PILES	BARRIER LOGS		10'-12' FT LENGTH, 8"-12" DIA, PROVIDE (4) LOGS PER PILE LOCATION SHOWN ON PLANS, USE SALVAGED TRUNKS AS LOGS TO BLOCK OFF TRAIL ACCESS	4 LP12
X LF	164 LF	ROOT BARRIER	MIN 24" DEPTH	PROVIDE ROOT BARRIER WHERE TREES ARE WITHIN 5' OF PAVEMENT AND WHERE SHOWN ON PLAN	
	84,321 SF	NO MOW SEED MIX			3 LP11
	9,064 SF	LAWN SEED MIX		SEED MIX TO MATCH STORMWATER MANUAL REQUIREMENTS	SEE CIVIL DWGS FOR SOIL PREPARATION
	18,074 SF	BIORETENTION SEED MIX			

PLANTING SCHEDULE B - NON GRANT REIMBURSABLE

SYM	QTY	SCIENTIFIC/COMMON NAME	SIZE	REMARKS	DETAILS
	1,375 SF	NO MOW SEED MIX			3 LP11
		FOREST RESTORATION PLANTING		NO SOIL PREPARATION	
		SHRUB			
NO SYM	20	Oemleria cerasiformis / OSOBERRY	MIN #1 CONT	FULL, WELL BRANCHED & WELL ROOTED; OWNER'S REP TO LOCATE IN FIELD ALONG TRAIL CONNECTION TO THE PIPELINE TRAIL	1 LP13
	20	Symphoricarpus alba / SNOWBERRY			
	20	Mahonia aquifolium / TALL OREGON GRAPE			
	20	Sambucus caerulea / BLUE ELDERBERRY			
	20	Rubus parviflorus / THIMBLEBERRY			
	20	Vaccinium ovatum / EVERGREEN HUCKLEBERRY			
		GROUNDCOVERS			
	51	Gaultheria shallon/ SALAL			
	51	Polystichum munitum/ SWORD FERN		FULL & WELL ROOTED; MIN 3 GREEN FRONDS; OWNER'S REP TO LOCATE IN FIELD ALONG TRAIL CONNECTION TO THE PIPELINE TRAIL	
		SHRUB – LIVE STAKE PLANTING		NO SOIL PREPERATION	
	100	Cornus sericea / RED-OSIER DOGWOOD	36" LIVE STAKES	TRIANGULAR SPACING @ 2' OC; PLANT EACH SPECIES IN GROUPS OF 5; ALTERNATE BETWEEN EACH WILLOW SPECIES GROUP & THE DOGWOOD GROUPS	5 LP13
	50	Salix hookeriana / HOOKERS WILLOW			
	50	Salix geyeriana / GEYER'S WILLOW			
	6,397 SF	MULCH ONLY	MIN 4" DEPTH		

PLANTING NOTES

1. ANY DISCREPANCIES W/ THE DWGS AND/OR SPECS & SITE CONDITIONS SHALL BE BROUGHT TO THE ATTENTION OF OWNER'S REPRESENTATIVE PRIOR TO PROCEEDING W/ CONSTRUCTION.
2. THE CONTRACTOR IS RESPONSIBLE FOR LOCATING UTILITIES PRIOR TO BEGINNING CONSTRUCTION.
3. PLANT MATERIAL LOCATIONS SHALL BE COORDINATED W/ SPRINKLER IRRIGATION HEAD LOCATIONS TO AVOID ANY CONFLICTS.
4. LANDSCAPE CONTRACTOR SHALL BE RESPONSIBLE FOR ANY COORDINATION W/ SUBCONTRACTORS AS REQUIRED TO ACCOMPLISH PLANTING OPERATIONS.
5. TREE LOCATIONS SHOWN ON PLANTING PLANS ARE APPROXIMATE; IF FIELD ADJUSTMENTS ARE NECESSARY THE FOLLOWING MIN SETBACKS FOR CENTERLINE OF TREE TRUNKS TO EDGE OF DRIVEWAY, FACE OF CURB OR INTERSECTION AND TO CENTER OF ALL OTHERS SHOWN SHALL APPLY:

A.	LIGHTS	10'
B.	DRIVEWAYS	10'
C.	INTERSECTION	30'
D.	UNDERGROUND SEPTIC & WATER LINES	5'
E.	UTILITY/POWER POLES	5'
F.	UNDERGROUND FIBER CABLE	2'
G.	OTHER TREES	10'
H.	FACE OF CURB	3'
I.	RETAINING WALLS	3'
J.	GAS LINES	5'
K.	STORMWATER LINES	5'
L.	COMMUNICATION LINES	3'
M.	EDGE OF SEPTIC DRAINFIELD	5'

PLANTING LEGEND

DETAIL IDENTIFICATION / SHEET IDENTIFICATION

PROPERTY LINE

LIMITS OF WORK

Know what's below. Call before you dig.

Drawing: P:\2022 PROJECTS\2022-33C ORANGEGATE PARK - PHASE 1 IMPROVEMENTS\GRAPHICS\AUTOCAD\L-PLANT-PLOT.DWG Layout Tab: LP02
Xrefs: (DIESEL evaluation failed)
Date: 10/08/2026 Time: 03:26:00 PM Plotted by: CFOREST

HBB LANDSCAPE ARCHITECTURE

DESIGNED BY: D. KOONTS	SURVEYED BY:
DRAWN BY: J. BAKKE	DATE SURVEYED:
CHECKED BY: J. VONG	DATE PLOTTED: October 8, 2026

STATE OF WASHINGTON · MERIT O'VIR · 10/09/2026 · NO. 1396 EXP. 03/2027 · LICENSED LANDSCAPE ARCHITECT

NO.	DATE	REVISION	BY	APPROVED
1	10/09/2026	ADDENDUM 1	JB	DWK

Pierce County
Parks and Recreation Services
Lakewood Community Center
9112 Lakewood Drive SW
Lakewood, WA 98499
253.798.4081

BID SET

LP02

ORANGEGATE PARK
PHASE 1 IMPROVEMENTS
PLANTING SCHEDULES, NOTES & LEGEND
P-111031

REGION NO.	STATE	FEDERAL AID PROJECT NO.	SHEET NO.	TOTAL SHEETS
10	WA	*N/A*		

811 Know what's **below.** **Call** before you dig.

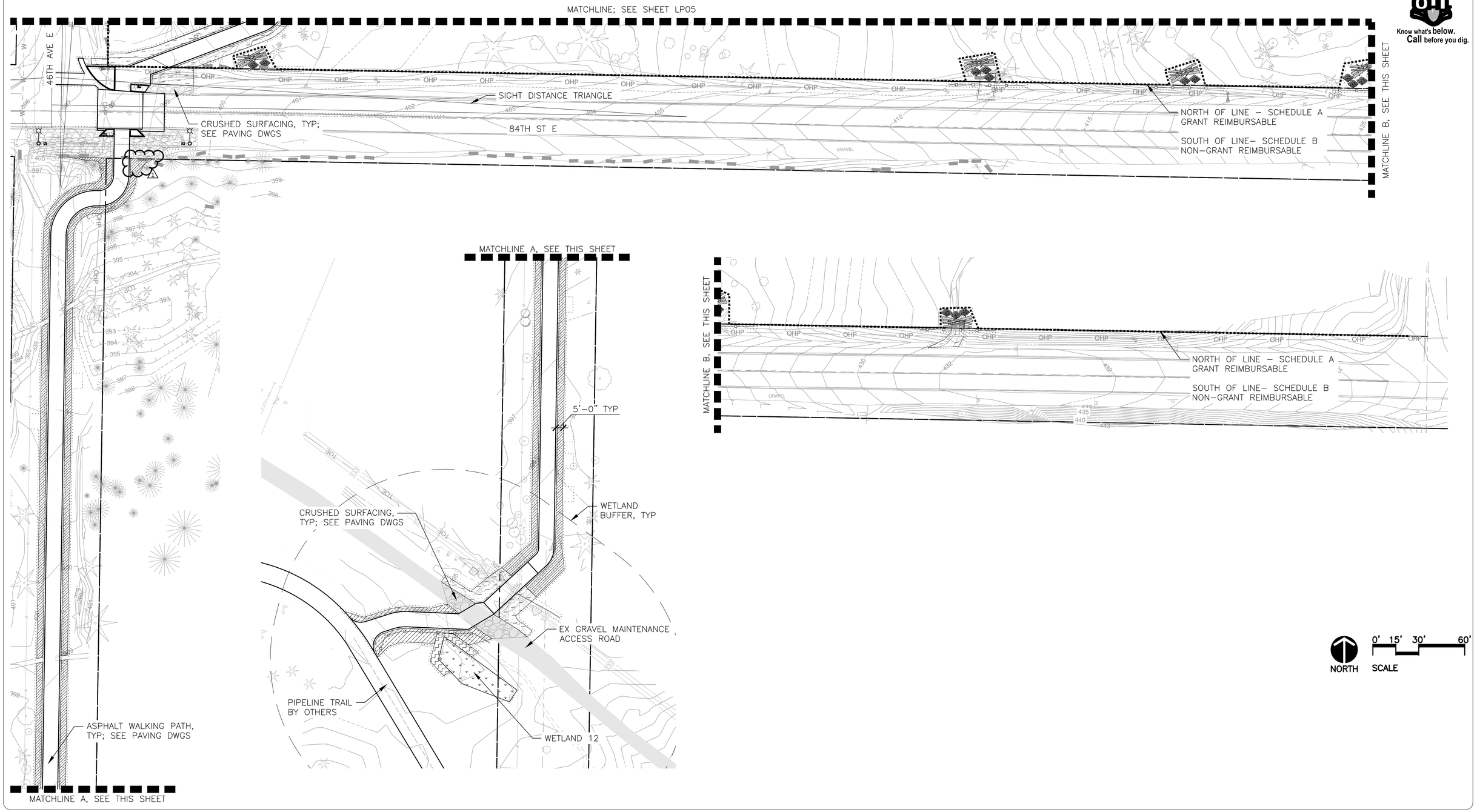

Drawing: P:\2022 PROJECTS\2022-33C ORANGEGATE PARK - PHASE 1 IMPROVEMENTS\GRAPHICS\AUTOCAD\L-PLANT-PLOT.DWG Layout Tab: LP06
Xrefs: (DIESEL evaluation failed)
Date: 10/08/2026 Time: 03:26:10 PM Plotted by: CFOREST

HBB
LANDSCAPE ARCHITECTURE

DESIGNED BY: *D. KOONTS*	*SURVEYED BY:*
DRAWN BY: *J. BAKKE*	*DATE SURVEYED:*
CHECKED BY: *J. VONG*	*DATE PLOTTED:* *October 8, 2026*

STATE OF WASHINGTON · MERIT OVIR · 10/09/2026 · NO. 1396 EXP. 03/2027 · LICENSED LANDSCAPE ARCHITECT

NO.	DATE	REVISION	BY	APPROVED
1	10/09/2026	ADDENDUM 1	JB	DWK

Pierce County
Parks and Recreation Services
Lakewood Community Center
9112 Lakewood Drive SW
Lakewood, WA 98499
253.798.4081

BID SET

LP06

ORANGEGATE PARK
PHASE 1 IMPROVEMENTS

PLANTING PLAN

P-111031

LEGEND		
SYMBOL	DESCRIPTION	AREA/ QUANTITY
	EXTERIOR WALL LIGHTS	6
	INTERIOR CEILING LIGHTS	8

WALL TYPE SCHEDULE

8" REINFORCED CONCRETE MASONRY BLOCK WALL WITH MORTAR JOINTS, GROUTED SOLID ALL CELLS RUNNING BOND PATTERN.

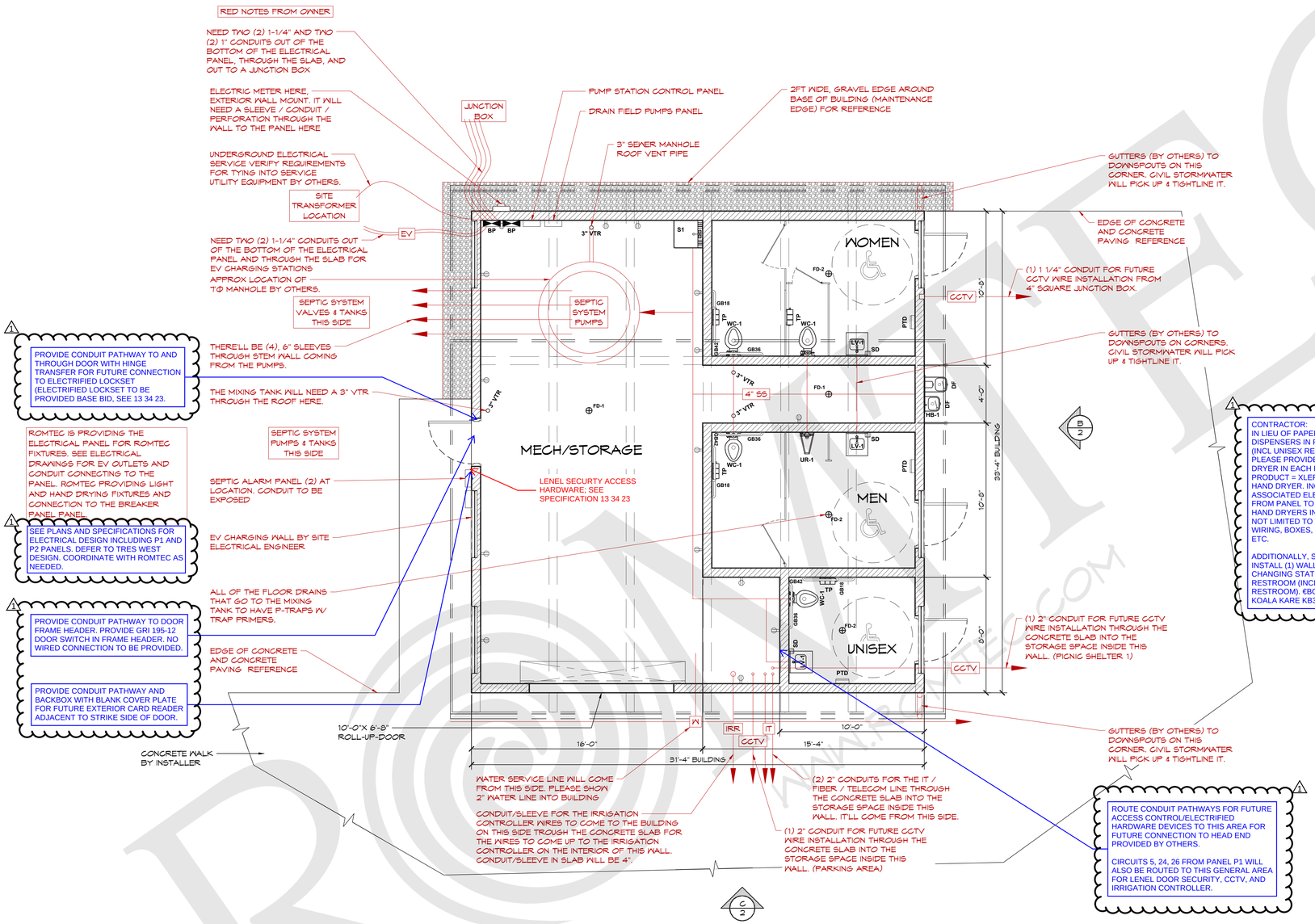

1 FLOOR PLAN
SCALE: 1/4" = 1'-0"

THESE PLAN VIEW AND ELEVATION DRAWINGS ARE A PRELIMINARY ARCHITECTURAL REPRESENTATION OF THE BUILDING. ALL DIMENSIONS, FEATURES AND COMPONENTS SHOWN ON THESE PRELIMINARY DRAWINGS MAY OR MAY NOT BE PART OF THE QUOTE. PLEASE REFER TO THE "SCOPE OF SUPPLY AND SERVICES" LETTER PROVIDED WITH YOUR QUOTE FOR ROMTEC'S PROPOSED SCOPE OF SUPPLY.

(b) EXCLUDED ITEMS

(c) PLAN VIEW AND ELEVATION DRAWINGS

(3) PRODUCT DATA

(4) WARRANTY & LIMITATIONS

*Note: Overall site plan is not part of **building supplier's** scope.*

1.4. WARRANTY

A. The building package and all associated components provided by ***building supplier*** shall be warranted against defects in materials and workmanship for a period of not less than one (1) year from the date of substantial completion.

B. ***Building supplier*** shall pass through to owner all relevant manufacturers' warranties for individual products and components of the building package.

SECTION 2: BUILDING PACKAGE PRODUCTS

2.1. APPROVED BUILDING SUPPLIERS

A. Romtec, Inc.,
18240 North Bank Road, Roseburg, OR 97470
Tel: 541-496-3541; Fax: 541-496-0803;
Email: RIsales@romtec.com
Web: www.Romtec.com

B. Requests for use of an alternate ***building supplier*** will be considered in accordance with provisions of Section 1.

2.2. BUILDING DESCRIPTION

A. Refer to drawings for quantities, dimensions, locations, and installation methods for the materials and items described in this section.

B. Building dimensions shall match what is indicated on drawings.

2.3. PLUMBING FIXTURES & ACCESSORIES

A. The following plumbing fixtures and accessories shall be supplied by ***building supplier***.

B. Toilet shall be wall mount, top supply, stainless steel.

C. Flush valve shall be a chrome, manual lever with ADA compliant metal oscillating non-hold-open handle.

D. Urinal shall be top supply, stainless steel.

E. Flush valve shall be a chrome, manual lever with ADA compliant metal oscillating non-hold-open handle.

F. Lavatory shall be stainless steel, wall-mounted with rectangular lavatory basin, integral ribbed soap tray, 4" high back splash, exposed trap, and angle braces.

G. Faucets shall be deck mounted single hole single supply metering, sink faucet.

H. Grab bars shall be stainless steel.

I. Toilet paper dispenser shall be stainless steel, wall mount with three-roll capacity.

J. Surface-mounted towel dispenser shall be fabricated of heavy duty, 22-gauge stainless steel with exposed surfaces in satin finish. Refill indicator on face of cabinet. Tumbler lock to secure hinged front panel. Towel dispenser capacity 525 multi-fold or 400 C-fold towels.

K. Soap/Sanitizer Dispenser shall be Bradley Corp. Diplomat Series Model 6A03, surface-mounted automatic foam soap/sanitizer dispenser, with face formed with contemporary contours, radii, and finish matching related accessories in manufacturer's designer series. Capacity 27 oz (800 ml). Equipped with hinged cover and completely concealed mounting plate. Vandal resistant filler hole cover and sight gauge. Corrosion-resistant foam soap/sanitizer valve.

L. Utilitub17 with legs and ADA faucet in the mechanical room.

M. Drinking fountain shall include ADA outdoor freeze-resistant, vandal-resistant drinking fountain, vandal-resistant outdoor freeze-resistant bottle filler, drip tray, freeze resistant in-wall valve, back panel, and guard rails.

N. Bathroom partition shall be solid plastic, floor anchored and overhead braced.

2.4. ELECTRICAL

A. The following electrical fixtures shall be supplied by ***building supplier***.

B. Light fixtures shall be supplied by ***building supplier***.

(1) Exterior lights to be LED downlights with cast-aluminum housing with corrosion-resistant paint in dark bronze. Polycarbonate lens.

(2) Exterior lights controlled by photocell.

(3) Interior surface mount, 48" LED light fixtures.

(4) Restroom lights controlled by motion sensor.

(5) Mech room lights controlled by switch (switches by installer).

REV	DATE	BY	DESCRIPTION

NOT FOR CONSTRUCTION

ROMTEC
18240 NORTH BANK ROAD
ROSEBURG, OR 97470
(541)-496-3541 FAX (541)-496-0803

PROJECT: ORANGEGATE PARK
PIERCE COUNTY, WASHINGTON

SHEET TITLE: FLOOR PLAN SPECIFICATIONS

PROJECT I.D.# 2247A

DATE: 06/10/2026

DRAWN BY: JRM/ZW

SHEET NO. 2A

FOR BID PURPOSES ONLY

© 2026 ROMTEC, INC. ALL RIGHTS RESERVED. THESE PLANS AND DRAWINGS MAY NOT BE REPRODUCED, ADAPTED OR FURTHER DISTRIBUTED, AND NO BUILDINGS MAY BE CONSTRUCTED FROM THESE PLANS, WITHOUT THE WRITTEN PERMISSION OF ROMTEC, INC.

APPENDIX F: Temporary Project Sign

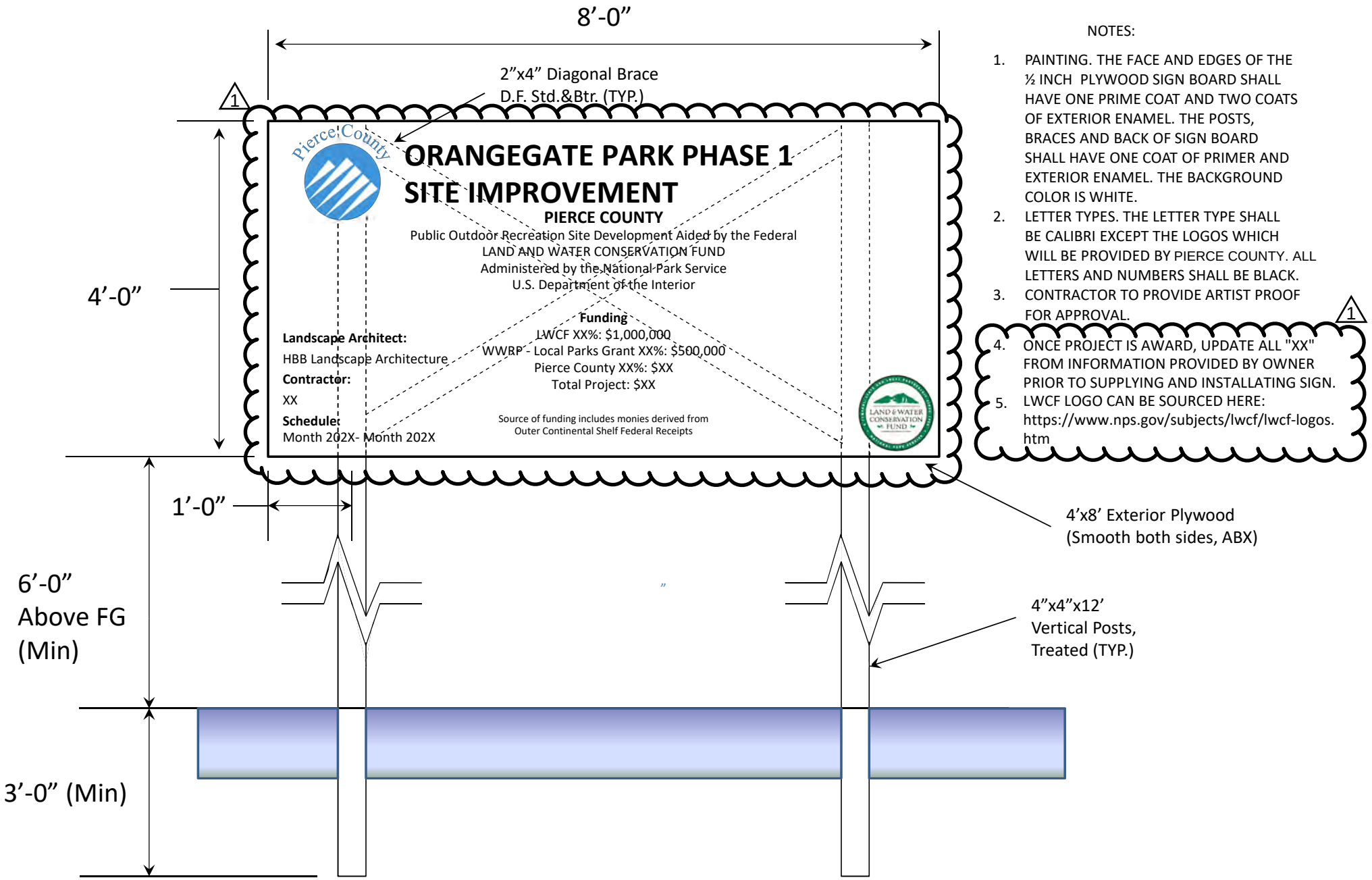

NOTES:

1. PAINTING. THE FACE AND EDGES OF THE ½ INCH PLYWOOD SIGN BOARD SHALL HAVE ONE PRIME COAT AND TWO COATS OF EXTERIOR ENAMEL. THE POSTS, BRACES AND BACK OF SIGN BOARD SHALL HAVE ONE COAT OF PRIMER AND EXTERIOR ENAMEL. THE BACKGROUND COLOR IS WHITE.
2. LETTER TYPES. THE LETTER TYPE SHALL BE CALIBRI EXCEPT THE LOGOS WHICH WILL BE PROVIDED BY PIERCE COUNTY. ALL LETTERS AND NUMBERS SHALL BE BLACK.
3. CONTRACTOR TO PROVIDE ARTIST PROOF FOR APPROVAL.

1

4. ONCE PROJECT IS AWARD, UPDATE ALL "XX" FROM INFORMATION PROVIDED BY OWNER PRIOR TO SUPPLYING AND INSTALLATING SIGN.
5. LWCF LOGO CAN BE SOURCED HERE: https://www.nps.gov/subjects/lwcf/lwcf-logos.htm